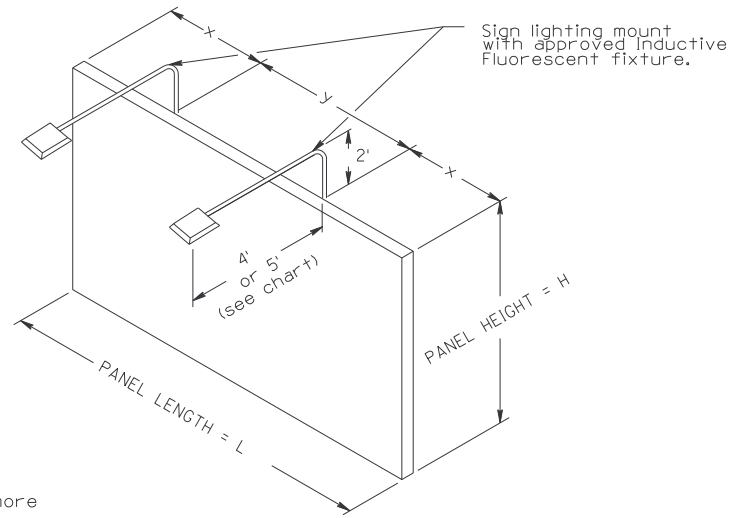


x = Distance from edge of panel.

y = Distance between sign light mount when more than one fixture is required (see chart).

## NOTES:

1. All materials and construction shall conform to the requirements of the Specifications.
2. When sign panels are placed side by side locate the lighting fixtures using the sum of the sign panel lengths.
3. When sign panel heights do not equal heights shown, round up to the next whole number shown.
4. Panel height "H", includes exit panel sign.
5. Use top mount sign lighting.

## LOCATION OF SIGN LIGHTING MOUNT WITH HPS FIXTURE ( Dimensions in feet )

| Sign Size ( HxL ) | 6x6 | 6x8 | 6x10 | 6x12 | 6x14 | 6x16 | 6x18 | 6x20 | 6x22 | 6x24 | 6x26 | 6x28 | 6x30 | 8x8 | 8x10 | 8x12 | 8x14 | 8x16 | 8x18 | 8x20 | 8x22 | 8x24 | 8x26 | 8x28 | 8x30 | 10 x 10 | 10 x 12 | 10 x 14 | 10 x 16 | 10 x 18 | 10 x 20 | 10 x 22 | 10 x 24 | 10 x 26 | 10 x 28 | 10 x 30 |
|---|---|---|---|---|---|---|---|---|---|---|---|---|---|---|---|---|---|---|---|---|---|---|---|---|---|---|---|---|---|---|---|---|---|---|---|---|
| Number of Fixtures | 1 | 1 | 1 | 1 | 1 | 1 | 2 | 2 | 2 | 2 | 2 | 2 | 2 | 1 | 1 | 1 | 1 | 1 | 2 | 2 | 2 | 2 | 2 | 2 | 2 | 1 | 1 | 1 | 1 | 2 | 2 | 2 | 2 | 2 | 2 | 2 |
| Mount Size | 4x2 | 4x2 | 4x2 | 4x2 | 4x2 | 4x2 | 4x2 | 4x2 | 4x2 | 4x2 | 4x2 | 4x2 | 4x2 | 4x2 | 4x2 | 4x2 | 4x2 | 4x2 | 4x2 | 4x2 | 4x2 | 4x2 | 4x2 | 4x2 | 4x2 | 4x2 | 4x2 | 4x2 | 4x2 | 4x2 | 4x2 | 4x2 | 4x2 | 4x2 | 4x2 | 4x2 |
| "X" feet | 3 | 4 | 5 | 6 | 7 | 8 | 3 | 4 | 4 | 5 | 6 | 6 | 7 | 4 | 5 | 6 | 7 | 8 | 3 | 4 | 4 | 5 | 6 | 6 | 7 | 5 | 6 | 7 | 8 | 3 | 4 | 4 | 5 | 6 | 6 | 7 |
| "Y" feet | 0 | 0 | 0 | 0 | 0 | 0 | 12 | 12 | 14 | 14 | 14 | 16 | 16 | 0 | 0 | 0 | 0 | 0 | 12 | 12 | 14 | 14 | 14 | 16 | 16 | 0 | 0 | 0 | 0 | 12 | 12 | 14 | 14 | 14 | 16 | 16 |

| Sign Size ( HxL ) | 12 x 10 | 12 x 12 | 12 x 14 | 12 x 16 | 12 x 18 | 12 x 20 | 12 x 22 | 12 x 24 | 12 x 26 | 12 x 28 | 12 x 30 | 14 x 8 | 14 x 10 | 14 x 12 | 14 x 14 | 14 x 16 | 14 x 18 | 14 x 20 | 14 x 22 | 14 x 24 | 14 x 26 | 14 x 28 | 14 x 30 |
|---|---|---|---|---|---|---|---|---|---|---|---|---|---|---|---|---|---|---|---|---|---|---|---|
| Number of Fixtures | 2 | 2 | 2 | 2 | 2 | 2 | 3 | 3 | 3 | 3 | 3 | 2 | 2 | 2 | 2 | 2 | 2 | 2 | 3 | 3 | 3 | 3 | 3 |
| Mount Size | 5x2 | 5x2 | 5x2 | 5x2 | 5x2 | 5x2 | 5x2 | 5x2 | 5x2 | 5x2 | 5x2 | 5x2 | 5x2 | 5x2 | 5x2 | 5x2 | 5x2 | 5x2 | 5x2 | 5x2 | 5x2 | 5x2 | 5x2 |
| "X" feet | 2 | 3 | 3 | 3 | 3 | 4 | 2 | 3 | 3 | 3 | 3 | 2 | 2 | 3 | 3 | 3 | 3 | 4 | 2 | 3 | 3 | 3 | 3 |
| "Y" feet | 6 | 6 | 8 | 10 | 12 | 12 | 9 | 9 | 10 | 11 | 12 | 4 | 6 | 6 | 8 | 10 | 12 | 12 | 9 | 9 | 11 | 11 | 12 |

PLAN SYMBOL

| | | |
|---|---|---|
| DESIGN APPROVED<br>SIGNATURE | ARIZONA DEPT. OF TRANSPORTATION<br>INTERMODAL TRANSPORTATION DIVISION<br>TRAFFIC SIGNALS & LIGHTING<br>STANDARD DRAWINGS | REV.<br>11/04 |
| APPROVED FOR DISTRIBUTION<br>ON FILE | PLACEMENT OF<br>LIGHTING FIXTURES<br>FOR OVERHEAD SIGNS | DRAWING NO.<br>T.S. 13-5 |