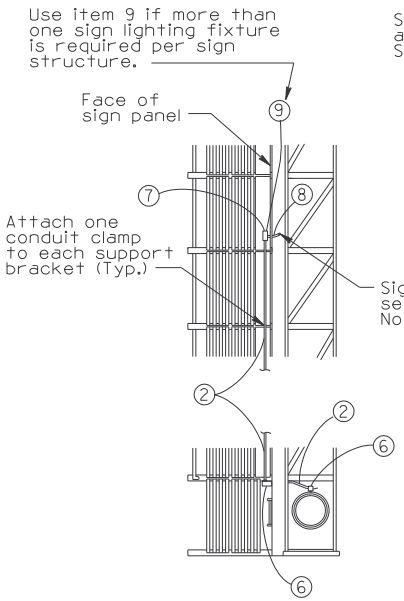

SECTION A-A

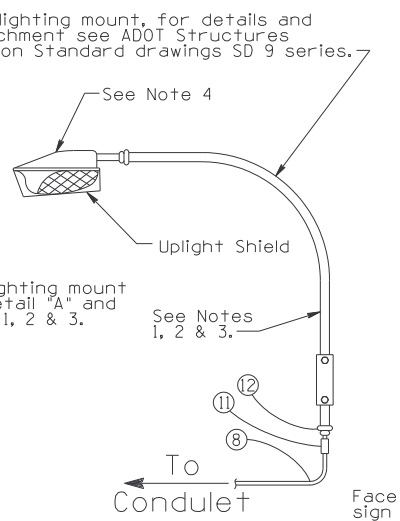

DETAIL "A"

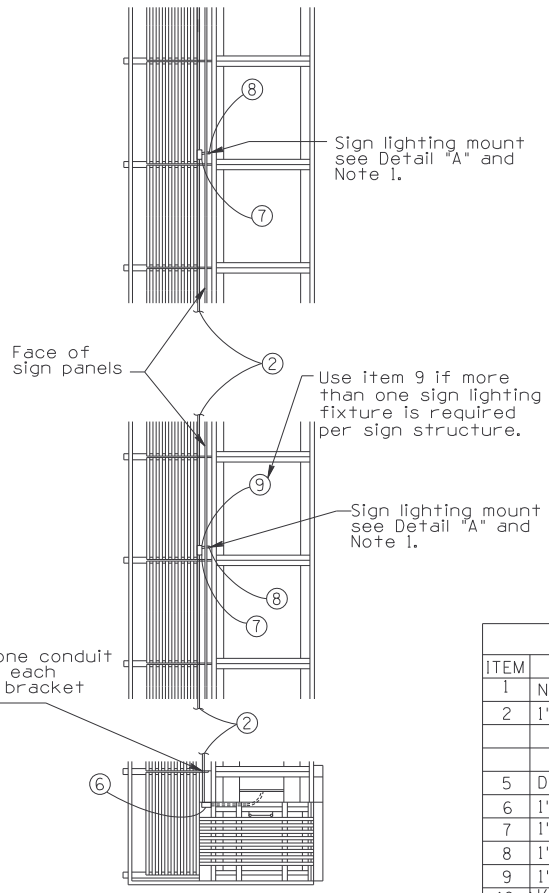

SECTION B-B

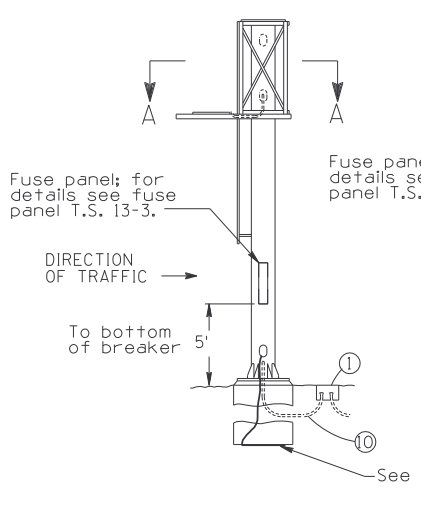

CANTILEVER SIGN STRUCTURE
(View From House Side)

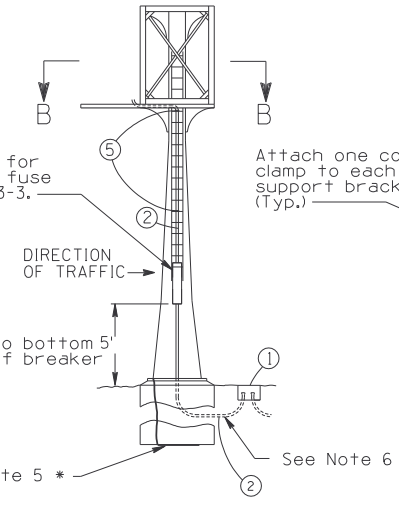

BRIDGE SIGN STRUCTURE
(View From House Side)

PLAN SYMBOL

PLAN SYMBOL

NOTES:

1. Sign lighting mount shall be located at the center of the sign panel. The sign lighting mount shall be fully Galvanized in accordance with ASTM-A-123.
2. In the event a vertical sign mounting bracket is not located where the luminaire is to be located then the contractor shall furnish and install a vertical sign mounting bracket. For details see Structures Section Tubular Sign Connection Detail sheets SD 9 series.
3. When the project plans require two sign lighting fixtures per sign panel, the lighting mounts shall be attached to the vertical sign mounting brackets at each end of the sign panel.
4. Sign lighting fixture shall be 85 W. Inductive Fluorescent, see Standard Specifications.

*5. All sign structure foundations shall have 25' of No. 4 bare copper conductor coiled and placed at the bottom of the excavation before the concrete is poured and shall be connected to the hand hole grounding screw on cantilever sign structure and connected to the anchor bolt on the bridge sign structures.

6. All steel conduit located underground shall be wrapped with an approved PVC tape.
7. Conductors extending from the fuse panel to each fixture shall be as follows: 2-#12 THW for 480V. circuits, and 2-#10 THW for 240V. circuits, also 1-#8 insulated Green bond to each fixture.
8. Breaker panel access door shall be pad lockable.
9. Items marked with an asterik (*) shall be installed at all sign locations. All other items shall be installed as called for on plans.

MATERIAL LIST

ITEM	DESCRIPTION
1	No. 5 Pull Box when required by the project plans.
2	1" Rigid Galvanized Steel Conduit.
5	Drill and tap for 1/4" Screw for mounting Conduit Clamps as Req'd
6	1" x 1" L.B. Condulet.
7	1" x 1" L.L. Condulet.
8	1" Watertight Flexible Steel Conduit with Approved Fittings.
9	1" x 1" x 1" TB Condulet.
10	1/2" PVC Conduit.
11	1" x 1" Type "C" Condulet.
12	2" to 1" Reducer threaded for 1" conduit, see ADOT Signing and Marking Guidelines for installation.

DESIGN APPROVED
SIGNATURE
APPROVED FOR DISTRIBUTION
ON FILE

ARIZONA DEPT. OF TRANSPORTATION
INTERMODAL TRANSPORTATION DIVISION
TRAFFIC SIGNALS & LIGHTING
STANDARD DRAWINGS

REV. 11/04

SIGN LIGHTING DETAILS FOR TRUSS TYPE SIGNS

DRAWING NO. T.S. 13-2