CODE M6-5AZ

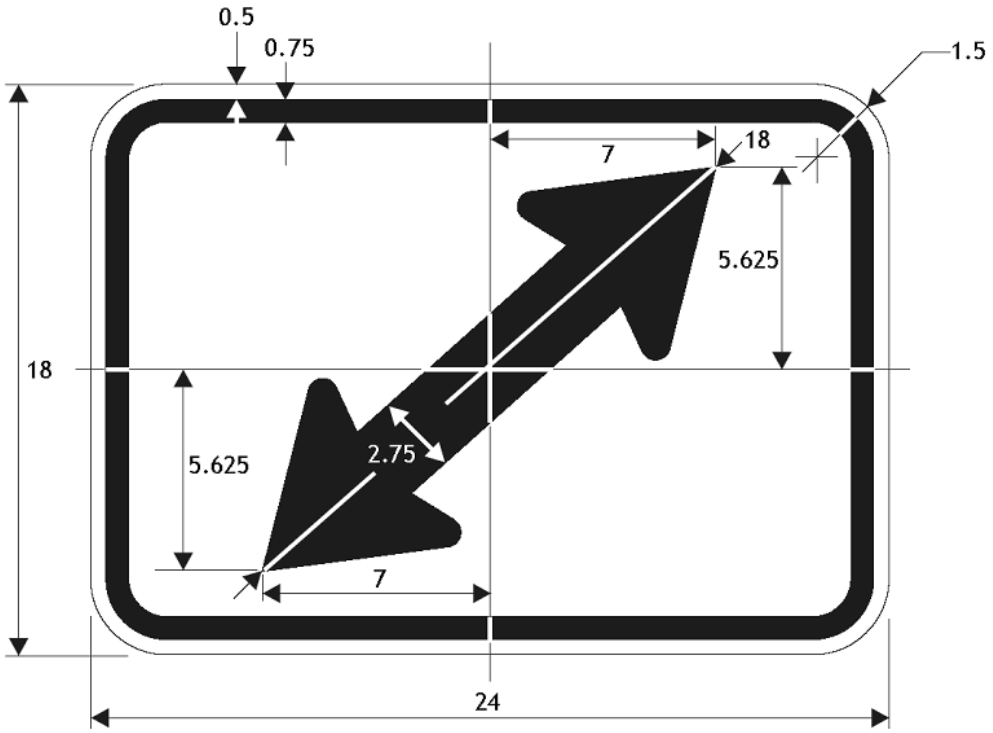

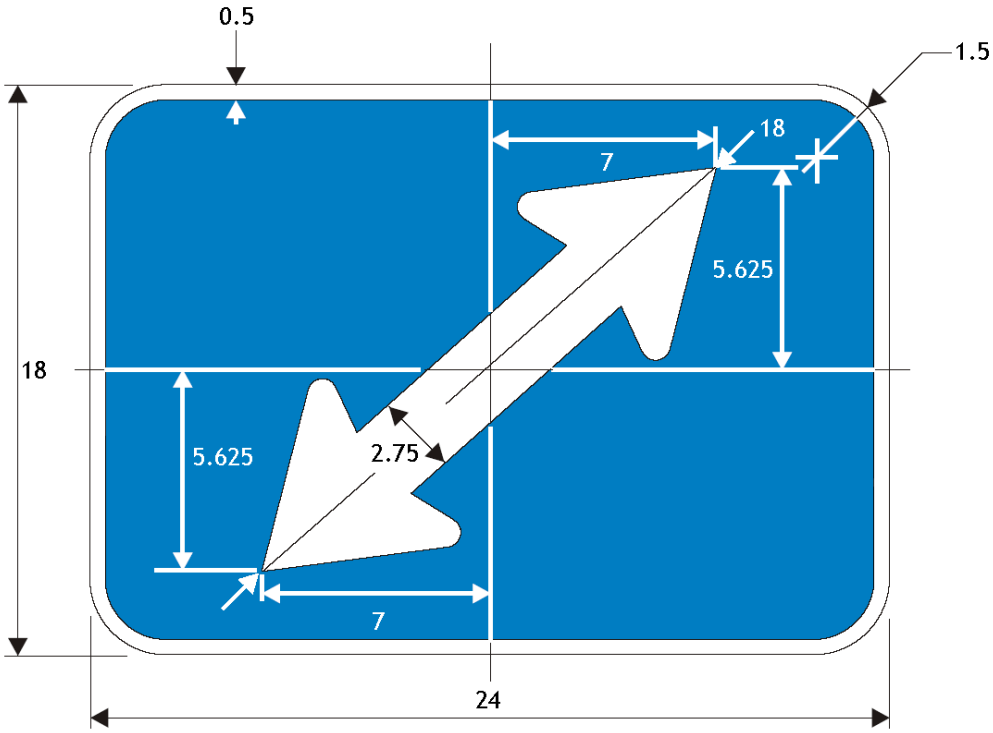

(Interstate)

ALL DIMENSIONS ARE IN INCHES

COLORS:

LEGEND - BLACK (NON-REFL)
WHITE (REFL)

BACKGROUND - WHITE (REFL) - ORANGE (REFL)
BLUE (REFL) - (INTERSTATE)
GREEN (REFL) - BROWN (REFL)

ARIZONA DEPARTMENT OF TRANSPORTATION
TRAFFIC ENGINEERING GROUP

DRAWN	DATE
FR, J.CHOY	2/06

APPROVED SIGNATURE ON FILE