NO	DESCRIPTION OF REVISIONS	MADE BY	DATE
1	UPDATED FOR RE-ISSUE	J. GEIST	9/08
2	REORGANIZED THE SHEETS IN THIS SERIES	J. GEIST	12/08
3			
4			

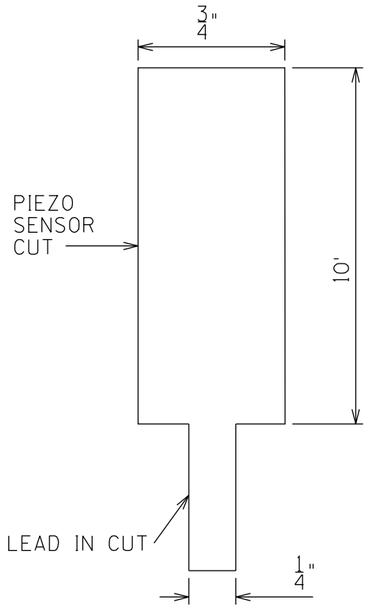

SAW CUT DETAIL
(TOP VIEW)

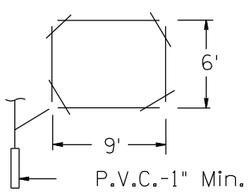

SAW CUT DETAIL

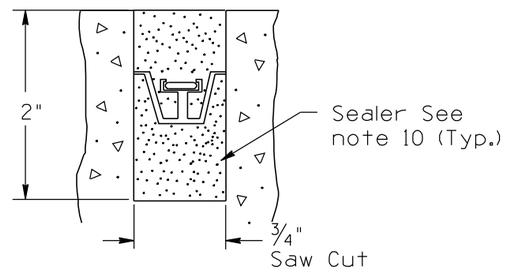

PIEZO DEPTH

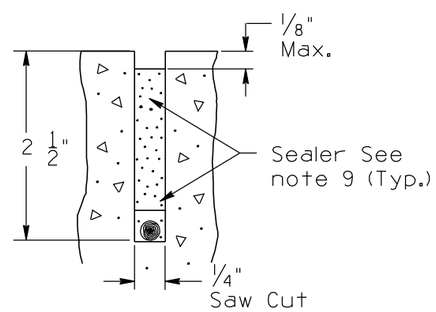

PIEZO LEAD-IN INSTALLATION

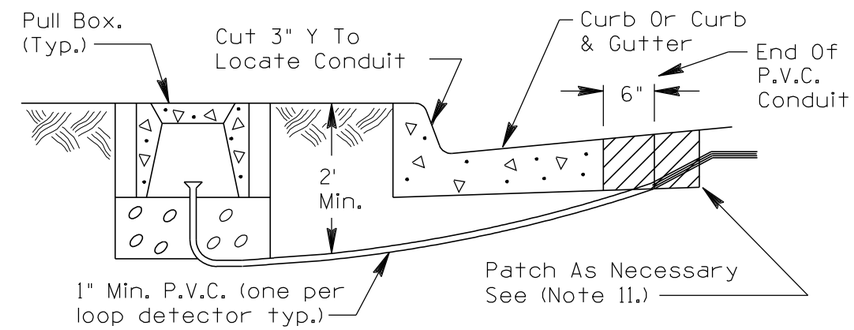

SECTION B-B
WITH CURB &GUTTER
DETAIL A

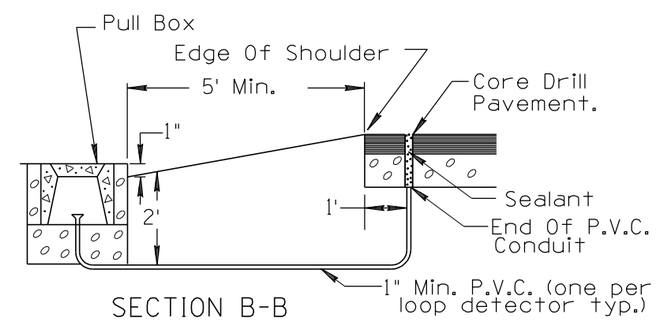

SECTION B-B
WITHOUT CURB & GUTTER
DETAIL B

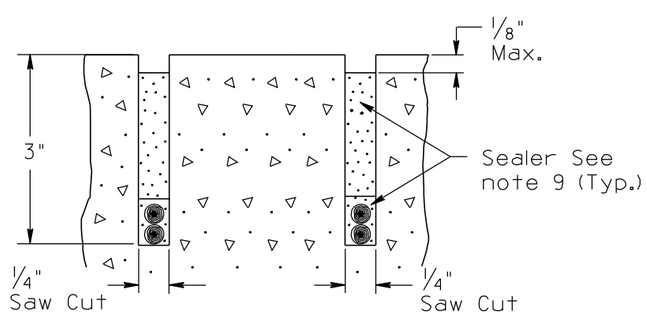

LOOP LEAD-IN INSTALLATION

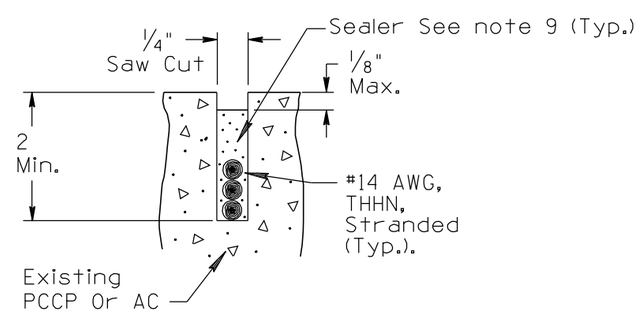

LOOP INSTALLATION
SECTION A-A

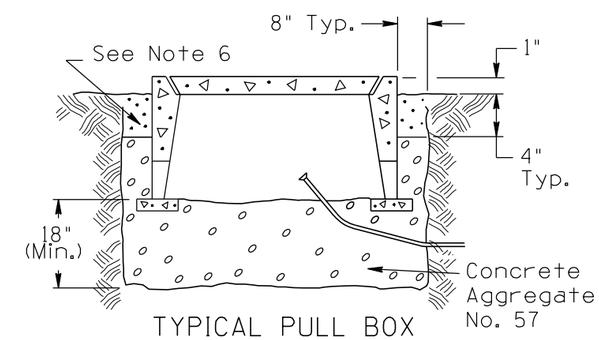

TYPICAL PULL BOX
INSTALLATION

SHEET 2 OF 3
NOT TO SCALE

DESIGN APPROVED SIGNATURE ON FILE	ARIZONA DEPARTMENT OF TRANSPORTATION INTERMODAL TRANSPORTATION DIVISION TRAFFIC SIGNALS & LIGHTING STANDARD DRAWINGS	REV. 12/08
APPROVED FOR DISTRIBUTION	PIEZOELECTRIC WEIGHT SENSOR AND LOOP LANE LAYOUT	DRAWING NO. T.S. 7-10