REV	DESCRIPTION	BY	DATE

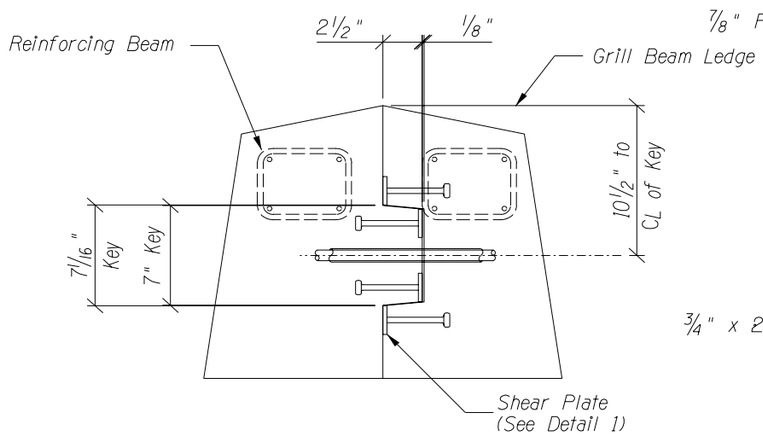

Key Detail

Scale: 1.5" = 1'-0"

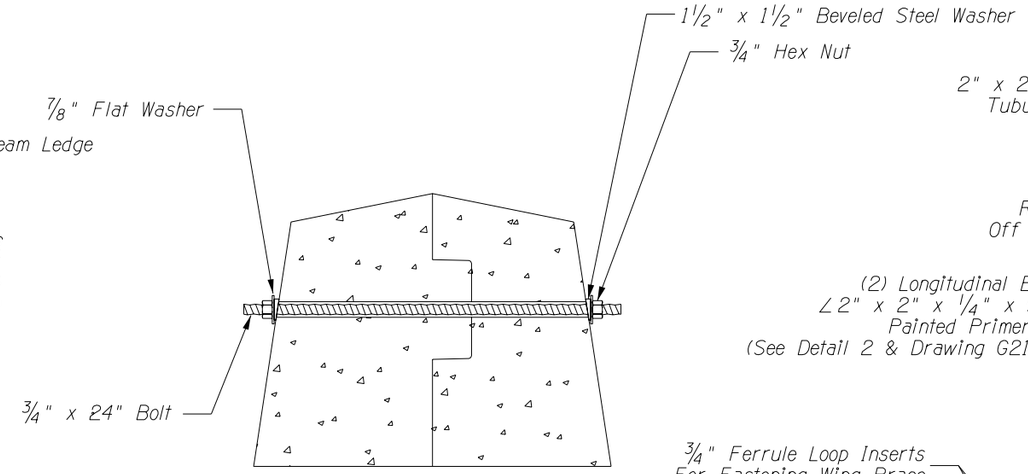

Tie Bolt Detail

Scale: 1.5" = 1'-0"

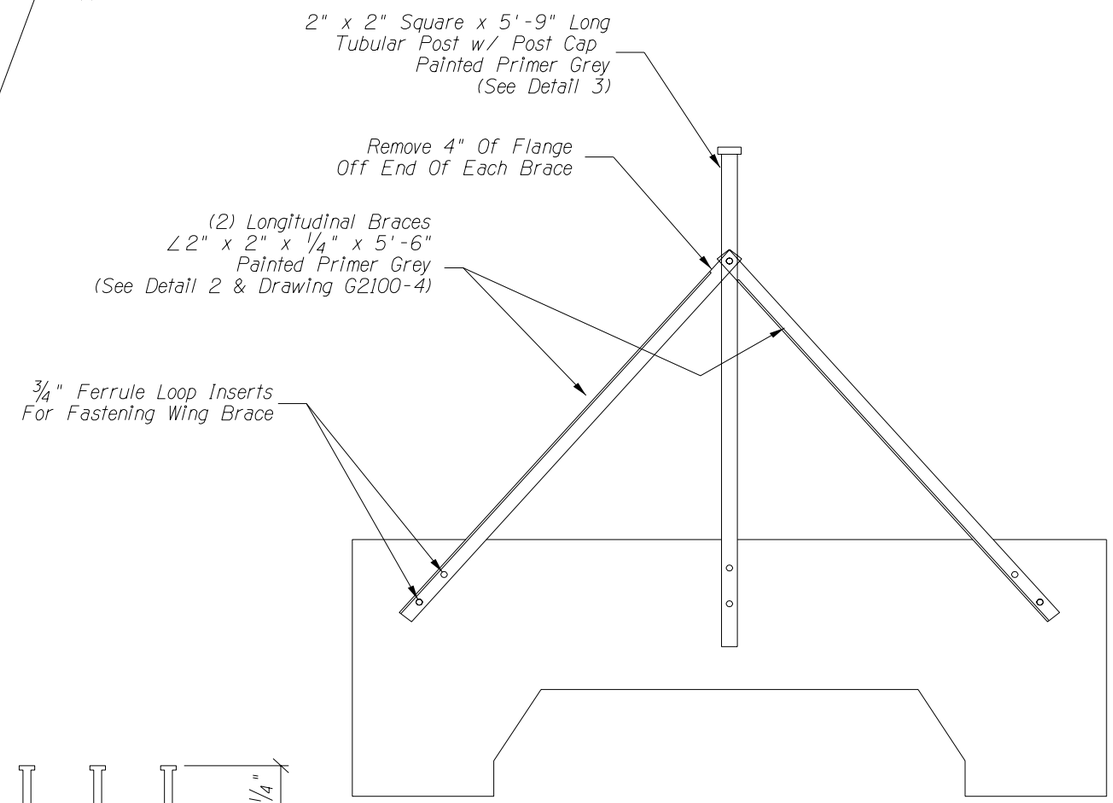

End Post Detail

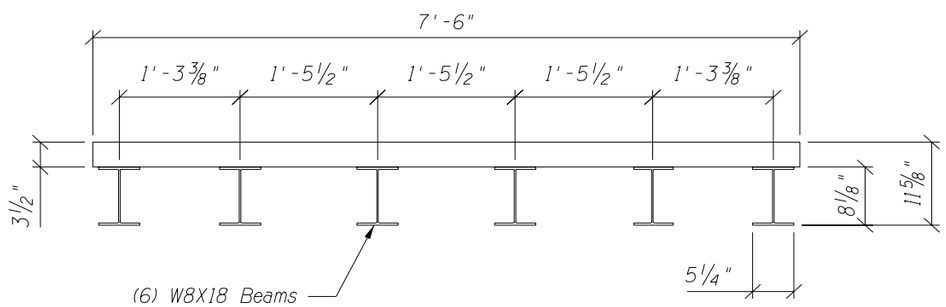

Traffic Grille Unit

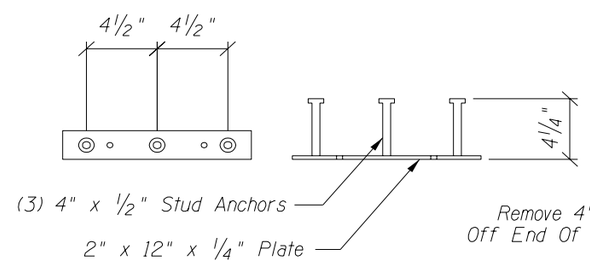

Detail 1

Scale: 1.5" = 1'-0"

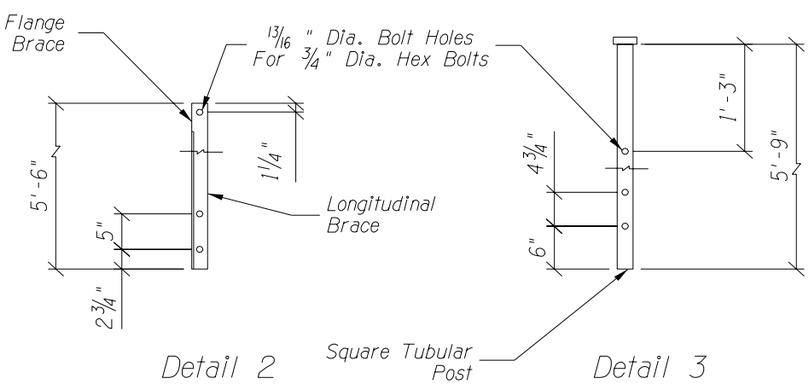

Detail 2

Detail 3

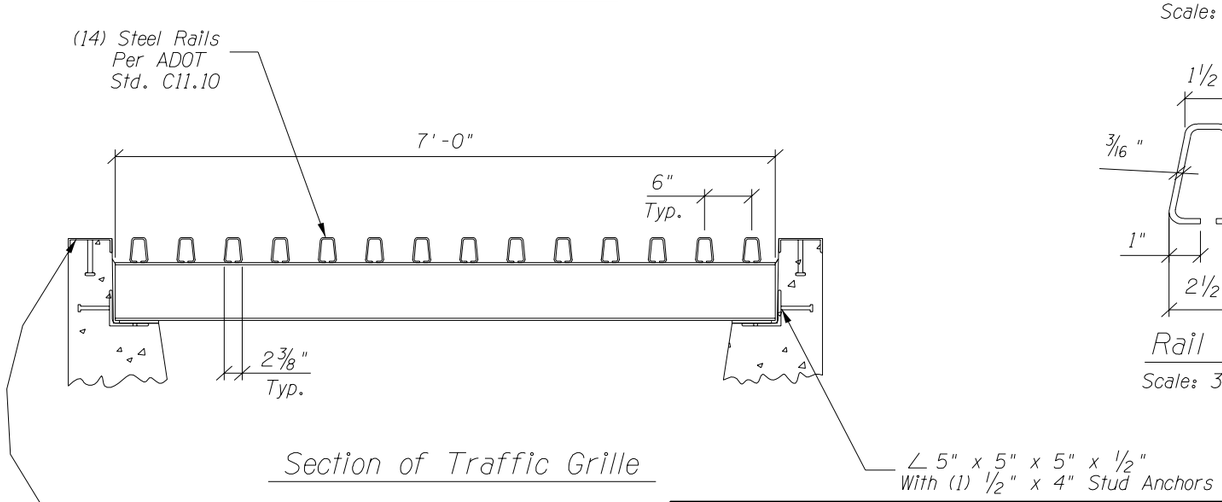

Section of Traffic Grille

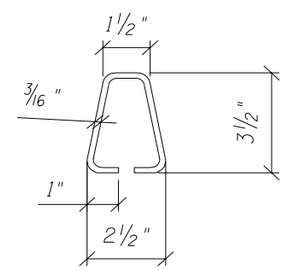

Rail Detail

Scale: 3" = 1'-0"

APPROVED VIA ADOT
PRIDE PROGRAM: 10/08/03

ITEM	DESCRIPTION	QUAN.	SIZE	TOTAL WT. LBS.

BILL OF MATERIALS

DRAWN: AT	DATE: 2/21/02		
CHECKED:	DATE:		
APPROVED:	DATE:		

THIS DRAWING IS THE PROPERTY OF THE UTILITY VAULT COMPANY. IT IS SUBMITTED FOR REFERENCE PURPOSES ONLY AND SHALL NOT BE USED IN ANY WAY INJURIOUS TO THE INTERESTS OF SAID COMPANY.

Precast Concrete Cattle Guard
With 1'-2" x 7" Male & Female Keys
A.D.O.T. Standard H-20 C-11.10

SCALE: 3/4"=1'-0"	S.O. NO:	DRAWING NO:	REV:
SHEET: 4 OF: 4	WEIGHT:	G2100-4	

UTILITY VAULT™
P.O. Box 610 Chandler, AZ 85244
(480) 963-2678 Fax: (480) 899-1937
Oldcastle Precast, Inc.