REV	DESCRIPTION	BY	DATE

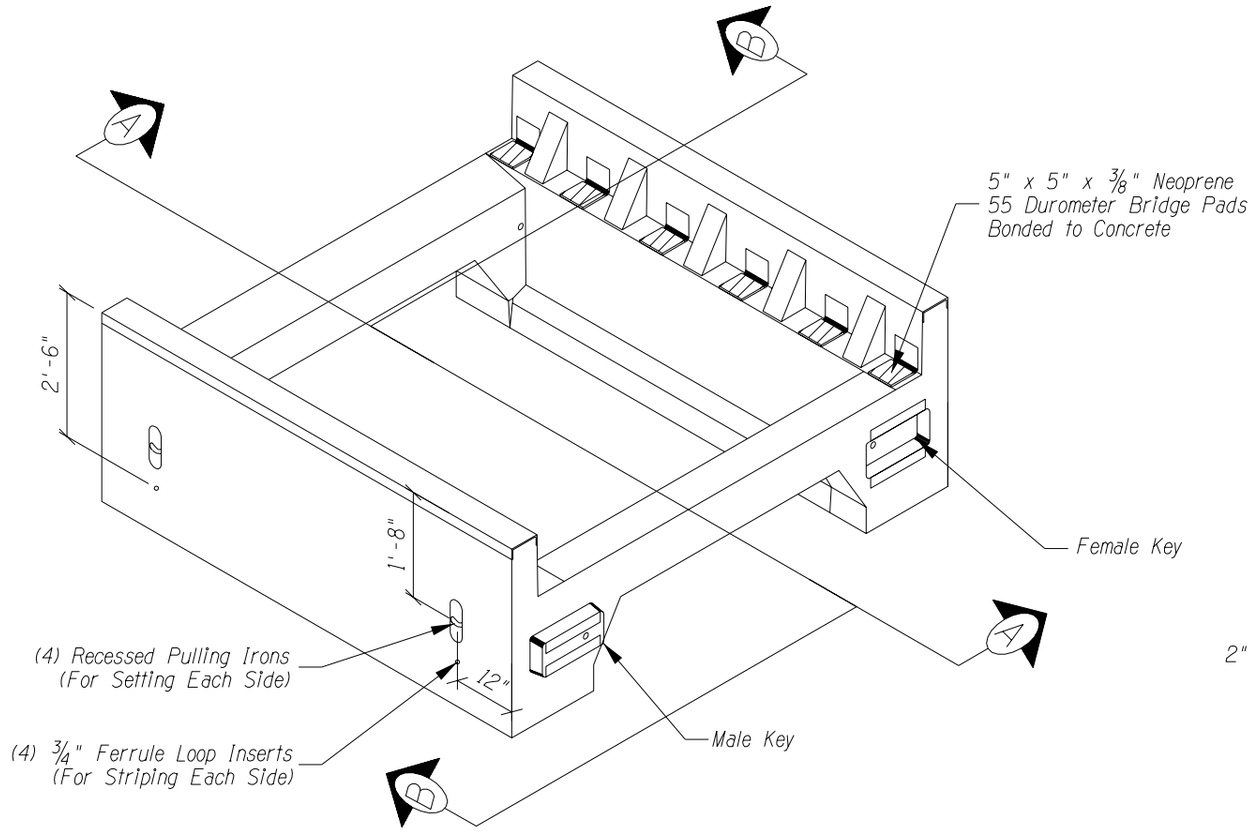

Isometric View Of Center Unit

Scale: 1/2" = 1'-0"

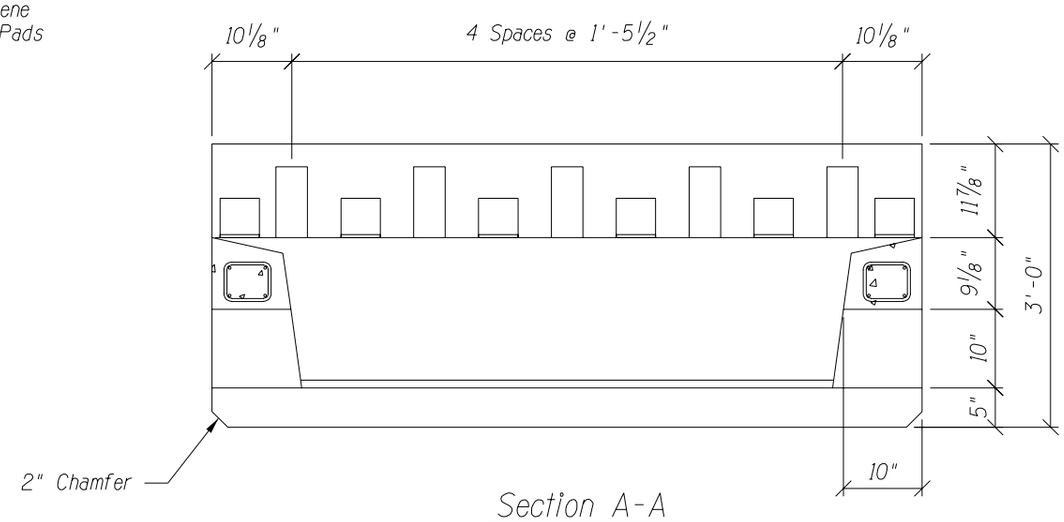

Section A-A

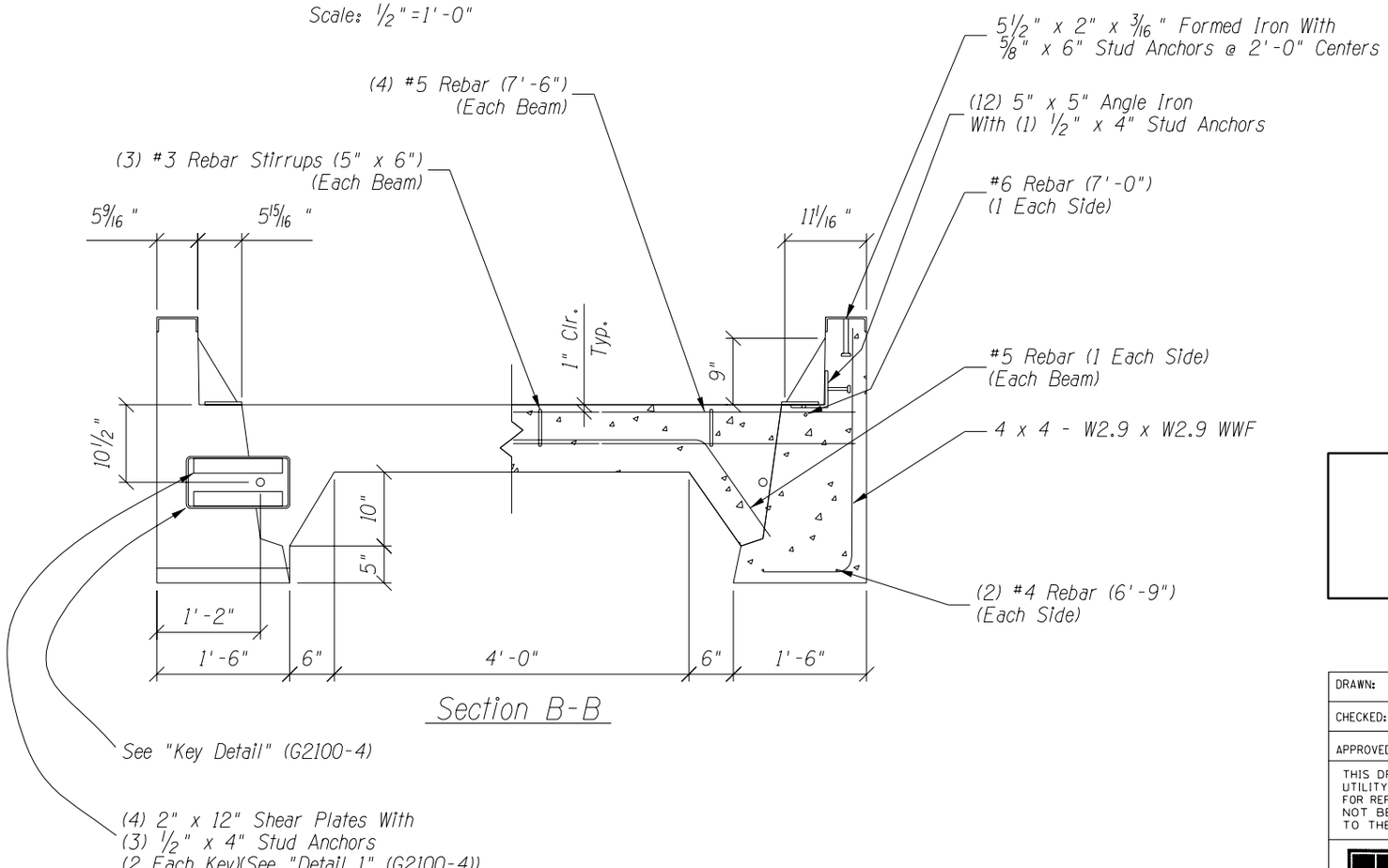

Section B-B

APPROVED VIA ADOT
PRIDE PROGRAM: 10/08/03

Replaces Drawing #HD-101A

DRAWN: AT	DATE: 2/21/02	Precast Concrete Cattle Guard With 1'-2" x 7" Male & Female Keys A.D.O.T. Standard H-20 C-11.10		
CHECKED:	DATE:			
APPROVED:	DATE:			
THIS DRAWING IS THE PROPERTY OF THE UTILITY VAULT COMPANY. IT IS SUBMITTED FOR REFERENCE PURPOSES ONLY AND SHALL NOT BE USED IN ANY WAY INJURIOUS TO THE INTERESTS OF SAID COMPANY.	SCALE: 3/4"=1'-0"	S.O. NO:	DRAWING NO: G2100-3	REV:
	SHEET: 3 OF: 4	WEIGHT:		

UTILITY VAULT™
P.O. Box 610 Chandler, AZ 85244
(480) 963-2678 Fax: (480) 899-1937

Oldcastle Precast, Inc.