REV	DESCRIPTION	BY	DATE

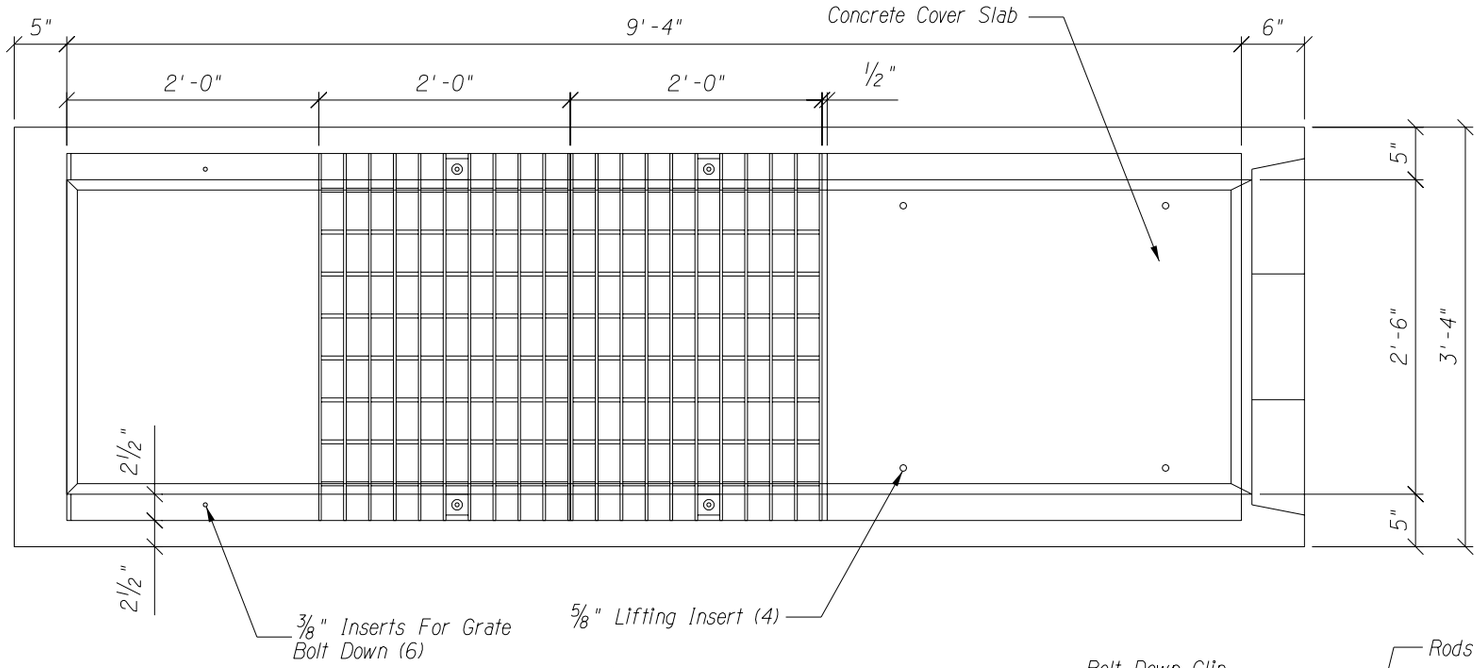

Plan View
(Grates Not Shown)

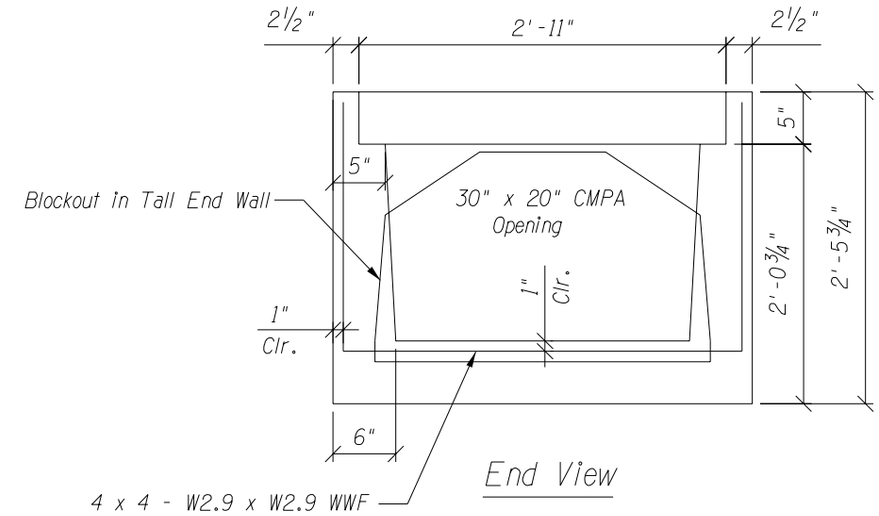

End View

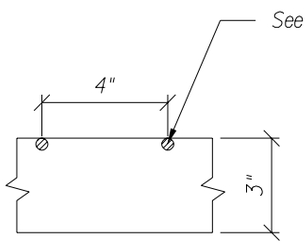

Section A-A

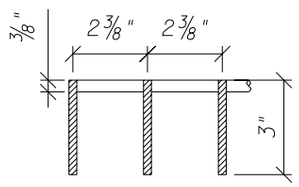

Section B-B

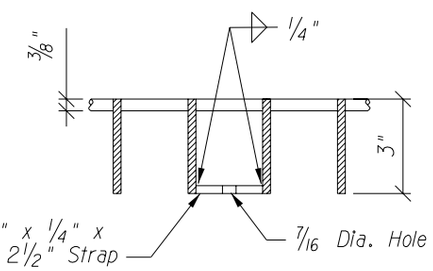

Bolt Down Clip Detail

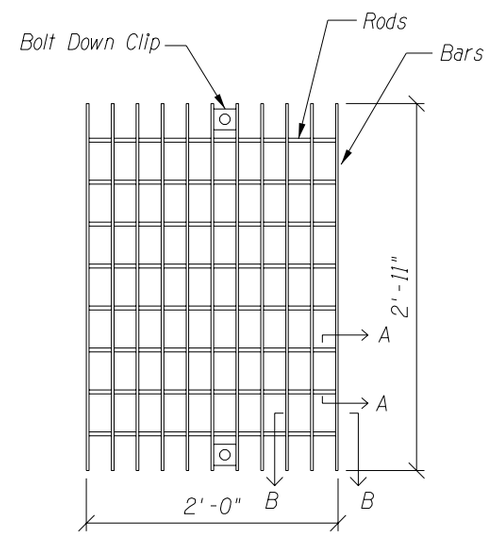

Grate Detail

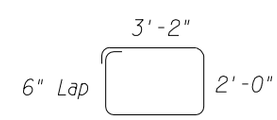

GENERAL NOTES:

1.) CONCRETE SHALL CONFORM TO THE REQUIREMENTS FOR CLASS S CONCRETE. THE MINIMUM STRENGTH SHALL BE 4000 PSI.
2.) GROUT SHALL BE IN ACCORDANCE WITH STANDARD SPECIFICATIONS EXCEPT WATER CONTENT SHALL BE SUCH THAT THE CONSISTENCY IS PROPER FOR SMOOTH TROWLING
3.) ALL WELDING SHALL BE IN ACCORDANCE WITH STANDARD SPECIFICATION 604-3.06
4.) THE COMPLETED GRATE SHALL BE GIVEN ONE SHOP COAT OF NO. 1 PAINT
5.) FOUNDATION SOIL AND BACKFILL SHALL BE IN ACCORDANCE WITH SECTION 203-5 OF THE STANDARD SPECIFICATIONS.
6.) 3/8" DIAMETER CROSS BARS MAY BE FILLET WELDED, RESISTANCE WELDED, OR ELECTRO-FORGED TO BEARING BARS.

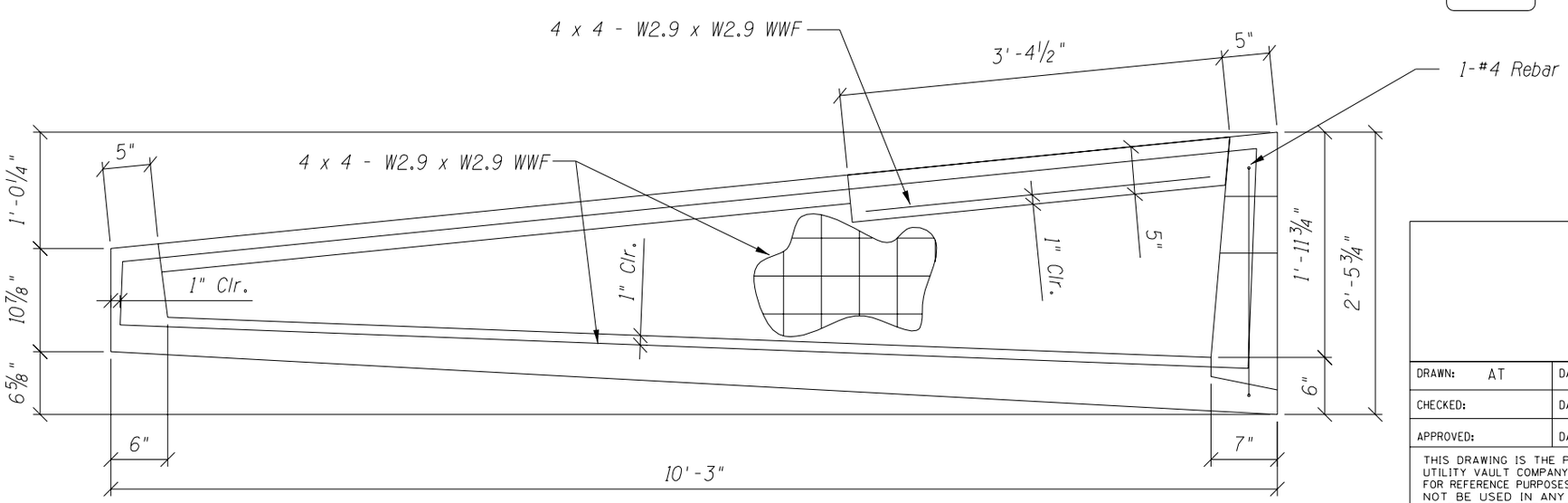

Section View

APPROVED VIA ADOT
PRIDE PROGRAM: 10/08/03

DRAWN: AT	DATE: 3/25/02	Precast Concrete Catch Basin A.D.O.T. Model No. C-15.90 Standard
CHECKED:	DATE:	
APPROVED:	DATE:	

THIS DRAWING IS THE PROPERTY OF THE UTILITY VAULT COMPANY. IT IS SUBMITTED FOR REFERENCE PURPOSES ONLY AND SHALL NOT BE USED IN ANY WAY INJURIOUS TO THE INTERESTS OF SAID COMPANY.

SCALE: 1"=1'-0"	S.O. NO:	DRAWING NO:	REV:
SHEET: 1 OF: 1	WEIGHT:	U9900-1	

UTILITY VAULT™
P.O. Box 610 Chandler, AZ 85244
(480) 963-2678 Fax: (480) 899-1937

Oldcastle Precast, Inc.