REV	DESCRIPTION	BY	DATE

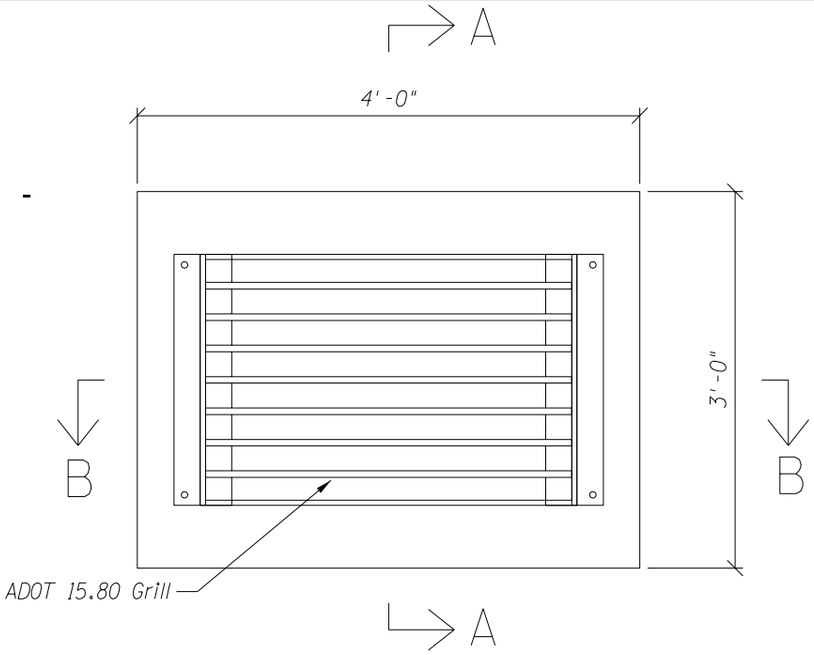

Plan View

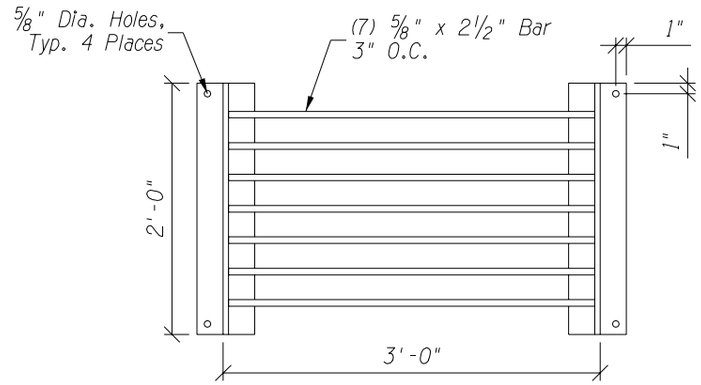

Grate Detail

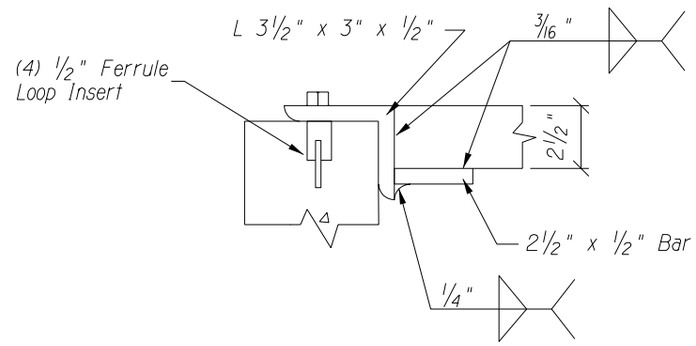

Grate Section

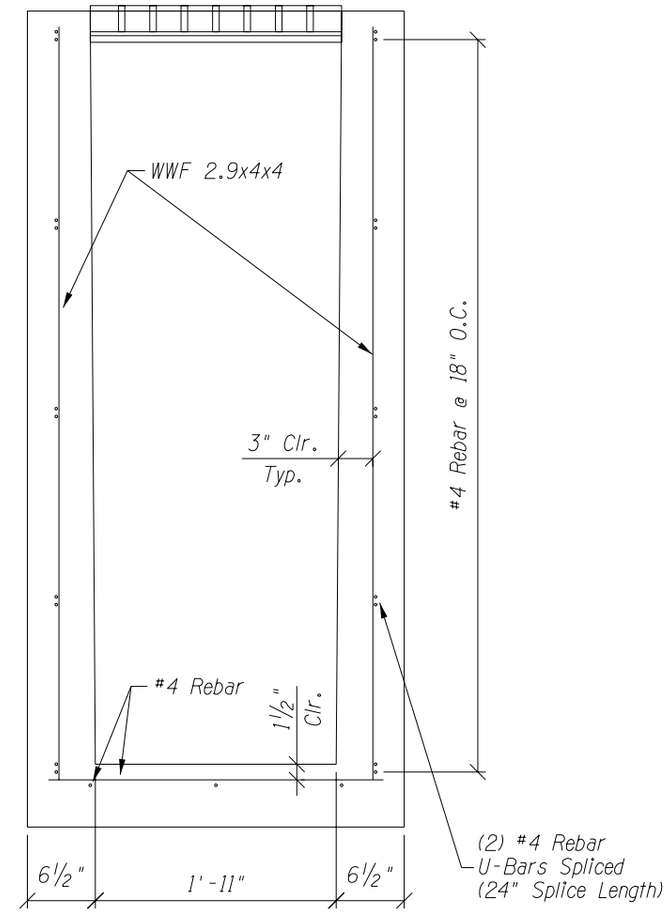

Section A-A

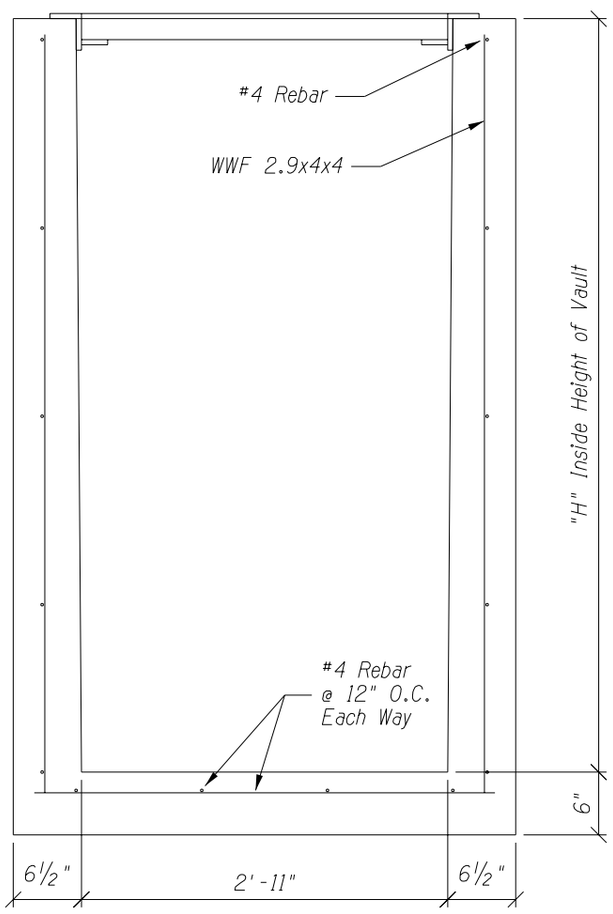

Section B-B

GENERAL NOTES:

1.) Catch basin to be cast in sections as shown for all heights to 6'-6" max. Heights over 6'-6" shall be 2 sections. No section shall be less than 12" in height. ConSeal 1" joint Sealant shall be used between all sections.
2.) Maximum Depth: 8'-0"
3.) GRATING SHALL BE FABRICATED OF STRUCTURAL STEEL.
4.) STRUCTURAL STEEL SHALL BE IN ACCORDANCE WITH ASTM A36.
5.) ALL WELDING SHALL BE IN ACCORDANCE WITH STANDARD SPECIFICATION 604-3.06.
6.) GRATING ASSEMBLY SHALL BE GIVEN ONE SHOP COAT OF NO. 1 PAINT.
7.) Concrete shall be Class B in accordance with Section 1006 of the ADOT Specifications.
8.) Grout shall be non-shrink & non-metallic. The type shall be approved by material services.
9.) The "H" dimension as specified on the project plans shall be verified in the field before casting.

APPROVED VIA ADOT
PRIDE PROGRAM: 10/08/03

DRAWN: AT	DATE: 3/25/02	2 x 3 Precast Concrete Catch Basin A.D.O.T. Model No. C-15.80 Standard
CHECKED:	DATE:	
APPROVED:	DATE:	

THIS DRAWING IS THE PROPERTY OF THE UTILITY VAULT COMPANY. IT IS SUBMITTED FOR REFERENCE PURPOSES ONLY AND SHALL NOT BE USED IN ANY WAY INJURIOUS TO THE INTERESTS OF SAID COMPANY.

SCALE: 1"=1'-0"	S.O. NO:	DRAWING NO:	REV:
SHEET: 1 OF: 1	WEIGHT:	U1100-1	

UTILITY VAULT™
P.O. Box 610 Chandler, AZ 85244
(480) 963-2678 Fax: (480) 899-1937
Oldcastle Precast, Inc.