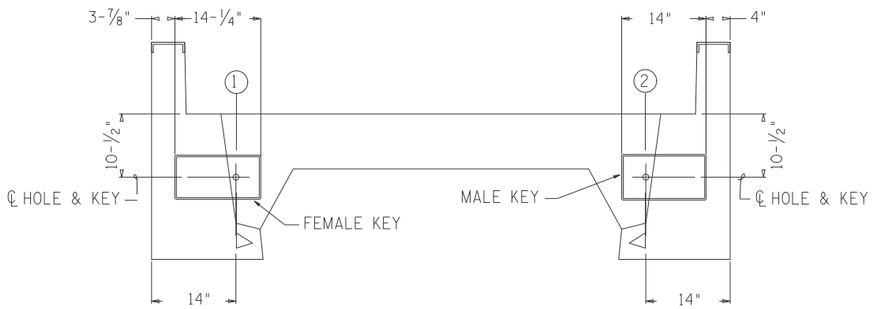

ELEVATION : KEY LOCATION

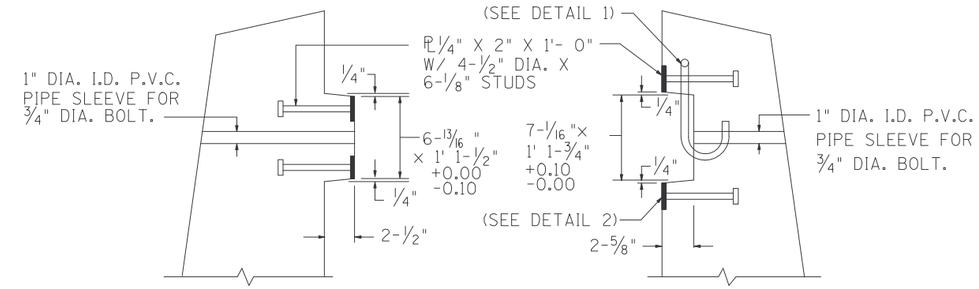

MALE KEY ②

FEMALE KEY ①

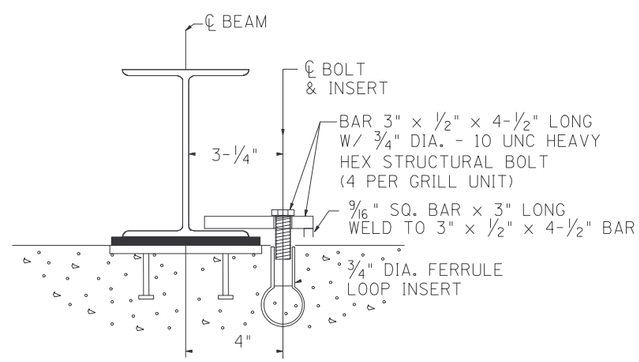

GRILL CLAMP DETAIL

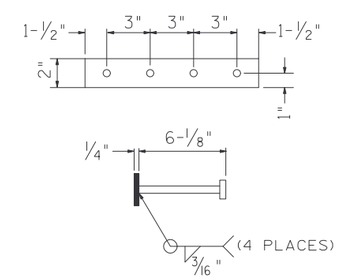

DETAIL 2

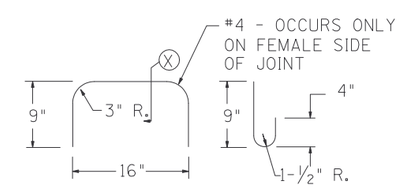

DETAIL 1

ALL REINFORCING SHALL HAVE A MIN. OF 2" CLEAR COVER UNLESS NOTED OTHER-WISE.

ALL STRUCTURAL STEEL SHALL RECEIVE 1 SHOP COAT OF ADOT PAINT No. 1, NOT LESS THAN 2 MILS DRY.

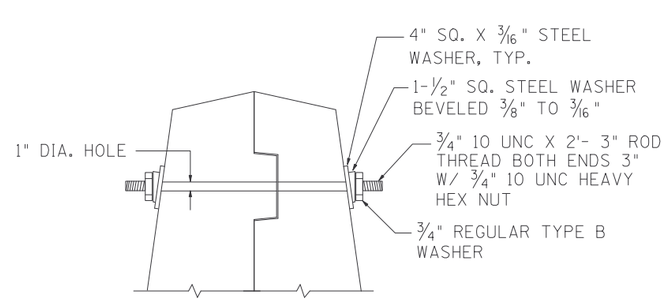

SECTION @ TIE BAR

APPROVED VIA ADOT
PRIDE PROGRAM: 02/16/05

REVISIONS

PRE-CAST MFG. CO.
301 W. BROADWAY, P.O. BOX 8186 (602) 276-4341
PHOENIX, ARIZONA. 85066 FAX. (602) 276-2907

TITLE: ARIZONA DOT CATTLEGUARD FOUNDATION - DETAILS

DWN:	JIM MARTIN	DWG. NO.	ADOT-CGF
DATE:	1 - 31 - 03	REF. NO.	L4
SCALE:	N.T.S.	SHT:	4 of 5