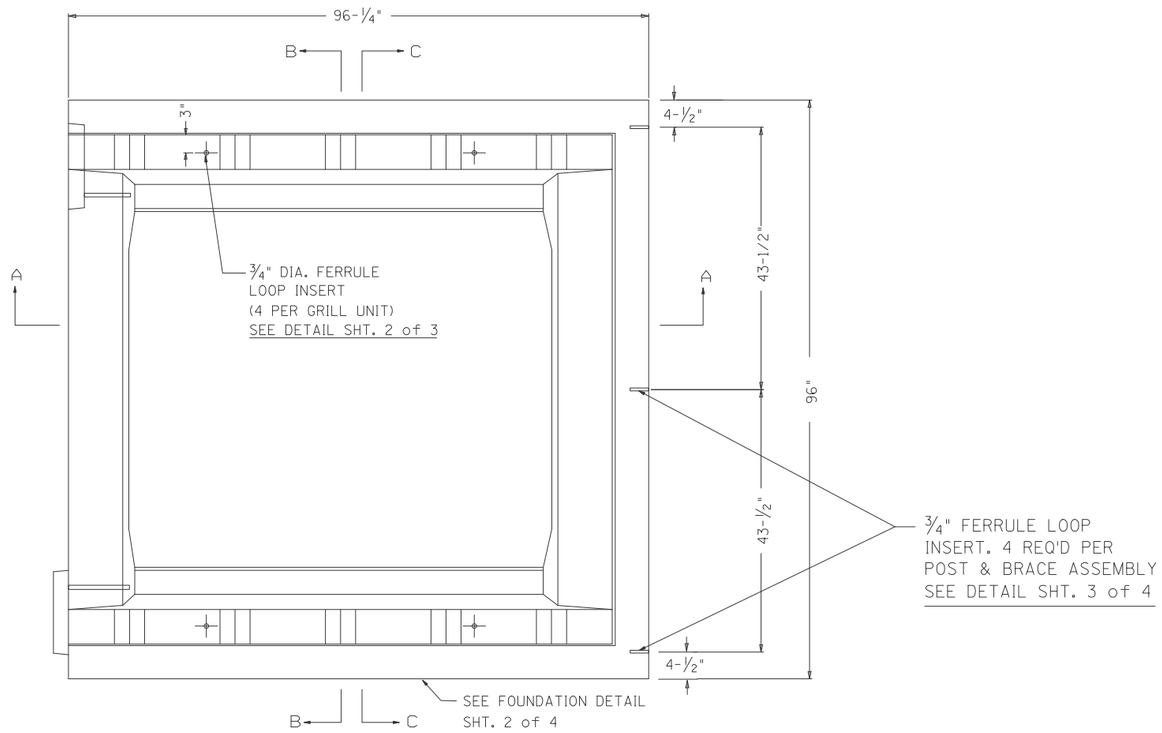

PLAN VIEW - END UNIT

(2 EACH)

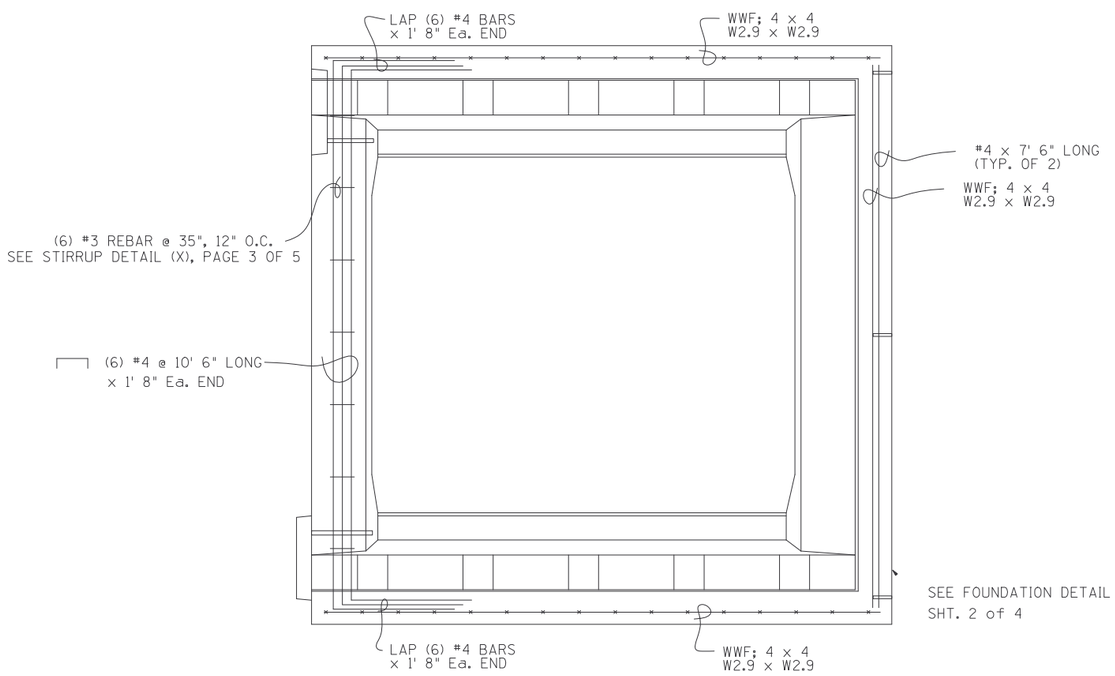

REINFORCING - PLAN VIEW

(END UNIT) (2 EACH)

GENERAL NOTES :

CONCRETE SHALL CONFORM TO THE REQUIREMENTS FOR STRUCTURAL CONCRETE FOR MINOR CONCRETE STRUCTURES.

CONCRETE SHALL HAVE A MINIMUM 28 DAY DESIGN STRENGTH OF 4500 PSI (PRECAST STRUCTURE)

EXCAVATION FOR THE STRUCTURE SHALL BE TO A PLANE 3' BELOW GRADE WITH THE LAST 3" EXCAVATED BY HAND AND COMPACTED TO 95 %PROCTOR DENSITY. SAND, AS REQUIRED, SHALL BE PLACED ON THE COMPACTED SOIL, COMPACTED AND SCREEDED TO GRADE.

STRUCTURE SHALL NOT BE PLACED ON ALLUVIAL SOIL, UNDRAINED QUICK SAND, SOFT OR WET CLAY OR WET SAND AND CLAY MIXED.

ELASTOMERIC BRIDGE PAD SHALL BE ALL ELASTOMER (NOT LAMINATED), HAVE A DUROMETER HARDNESS OF 50 AND WITH A THICKNESS TOLERANCE OF +0.125", -0.000". PADS FOR A SINGLE INSTALLATION SHALL BE OF UNIFORM THICKNESS WITHIN A TOLERANCE OF ±0.031". PADS SHALL BE FASTENED TO THE STEEL PLATE WITH AN APPROVED NON-WATER SOLUBLE EPOXY.

THREADED ROD, BOLTS, NUTS, AND WASHERS SHALL CONFORM TO ASTM A36 OR A307 AND BE GALV. OR Z/P IN ACCORDANCE WITH ASTM A153 OR B695.

STEEL BARS, PLATES, ANGLES AND BEAMS SHALL CONFORM TO ASTM A36 EXCEPT STEEL RAIL MAY BE ASTM A36 OR A570/570M GRADE 36, AND BENT TOP CAP ASTM A36 OR A569 / 569M COMMERCIAL QUALITY.

STEEL TUBING SHALL CONFORM TO ASTM A500 GRADE B.

REINFORCING STEEL SHALL CONFORM TO ASTM A615 60,000 PSI GRADE 60, EXCEPT #3 BAR WHICH IS GRADE 40.

REINFORCING WIRE (WELDED WIRE FABRIC) SHALL CONFORM TO ASTM A185.

DESIGN LIVE LOAD H-20 TRUCK LOADING (AASHTO)

APPROVED ALTERNATE FOR A.D.O.T. STANDARD DRAWING C-11.10, C-11.20 RESPECTIVELY & ALL ASSOCIATED SPECIFICATONS.

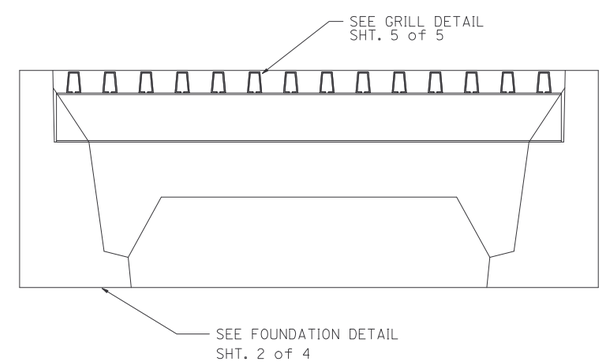

SECTION C-C

APPROVED VIA ADOT
PRIDE PROGRAM: 02/16/05

REVISIONS

PRE-CAST MFG. CO.
301 W. BROADWAY, P.O. BOX 8186 (602) 276-4341
PHOENIX, ARIZONA. 85066 FAX, (602) 276-2907

TITLE: ARIZONA DOT CATTLEGUARD FOUNDATION - END SECTION

DWN:	JIM MARTIN	DWG. NO.	ADOT-CGF
DATE:	1 - 31 - 03	REF. NO.	L1
SCALE:	N.T.S.	SHT:	1 of 5