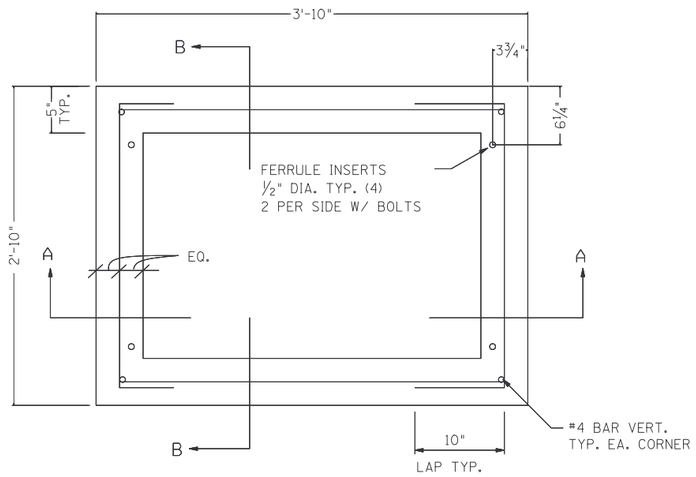

PLAN VIEW

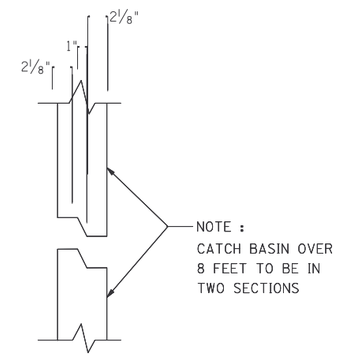

JOINT DETAIL

DESIGN CRITERIA:

LIVE LOAD	H-20 TRUCK LOADING (CONC. PRODUCT ONLY)
EQUIVALENT LATERAL EARTH PRESSURE:	30 P.C.F. (DRY) 36 P.C.F. (SATURATED)
DEPTH: (GROUND SURFACE TO TOP OF MANHOLE)	AT GRADE
MINIMUM SOIL BEARING CAPACITY:	2200 P.S.F. AT 10' 2500 P.S.F. AT 15' 3000 P.S.F. AT 20' 4000 P.S.F. AT 25' 4500 P.S.F. AT 30' 5000 P.S.F. AT 35'

DESIGN SPECS:

CONCRETE COMPRESSIVE STRENGTH SHALL BE BASED ON 28 DAY TEST AGE AND SHALL REACH F'c OF 6,000 P.S.I.

REINFORCING STEEL GRADE 40 ADOT STD. SPEC. 1003

REINFORCING WELDED WIRE FABRIC ASTM A185 65,000 P.S.I.

STRUCTURAL STEEL ASTM A-36

DESIGN CODES:

AMERICAN CONCRETE INSTITUTE (ACI) 318-95

ASTM C890-91 MINIMUM STRUCTURAL DESIGN LOADING FOR FOR MONOLITHIC OR SECTIONAL PRECAST CONCRETE WATER AND WASTEWATER STRUCTURES.

AMERICAN ASSOCIATION OF STATE HIGHWAY AND TRANSPORTATION OFFICIALS (AASHTO) HB-17TH EDITION

GENERAL NOTES:

ALL JOINTS BETWEEN CONCRETE UNITS SHALL BE SEALED WITH A HIGH QUALITY SEALANT TO ASSURE WATERTIGHT INTEGRITY.

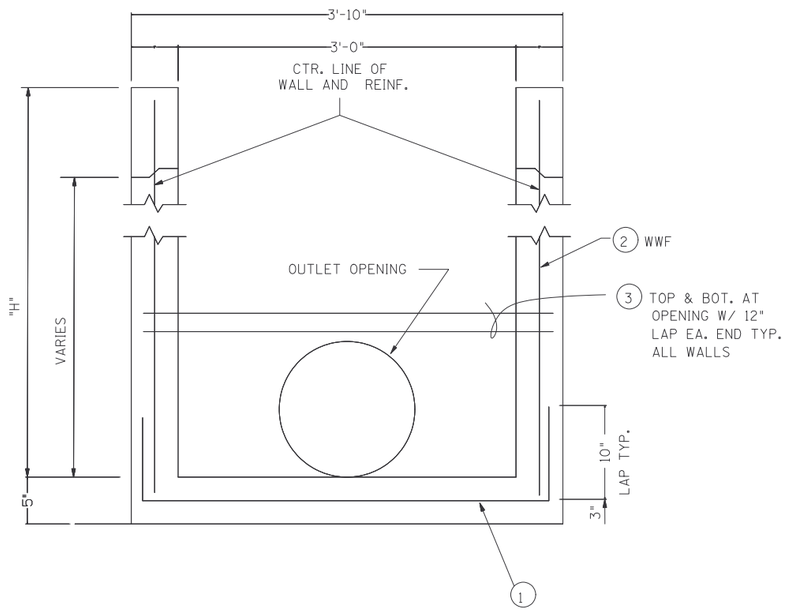

SECTION A-A

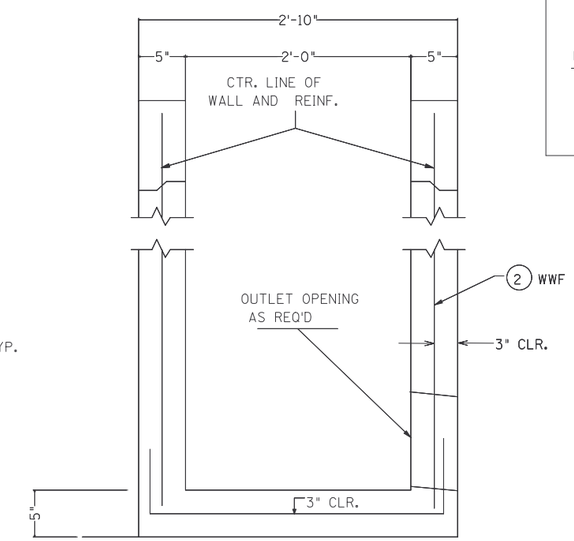

SECTION B-B

HEIGHT "H"	W W F, 4 X 4		OPNG. REINF.
	1	2	3
0 - 14'	W2.9 X W2.9	W2.9 X W2.9	1-#3
14' - 24'	W4 X W4	W4 X W4	2-#3
24' - 36'	W4 X W4	W2.9 X W2.9 AND W4 X W4	2-#4

APPROVED VIA ADOT
PRIDE PROGRAM: 02/16/05

03 - 10 - 03	
2 - 11 - 91	
REVISIONS	

PRE-CAST MFG. CO.
301 W. BROADWAY, P.O. BOX 8186 (602)276-4341
PHOENIX, ARIZONA, 85066

TITLE: ARIZONA DOT
CATCH BASIN C-15.80

DWN: JIM MARTIN	DWG. NO. 2X3CB
DATE: 03 - 10 - 03	REF. NO.
SCALE: N.T.S.	SHT: 1 of 1