Approved as NCHRP 350 TL3 Terminal via ADOT PRIDE Program 3/97

VOID

OFFSET NOTE:
THE POST OFFSET DIMENSIONS ARE GIVEN TO THE CENTER OF THE TRAFFIC FACE OF THE BLOCKOUTS, EXCEPT AT THE FIRST TWO POSTS, WHERE THE DIMENSION IS TO THE CENTER OF THE TRAFFIC FACE OF THE POST. OFFSET POINTS ARE TO BE LOCATED BY CHORD MEASUREMENTS AT THE BACK OF THE RAIL EQUAL TO THE NOMINAL POST SPACINGS SHOWN. POSTS ARE TO BE SET APPROXIMATELY RADIAL TO THE RAILING AT EACH POST LOCATION.

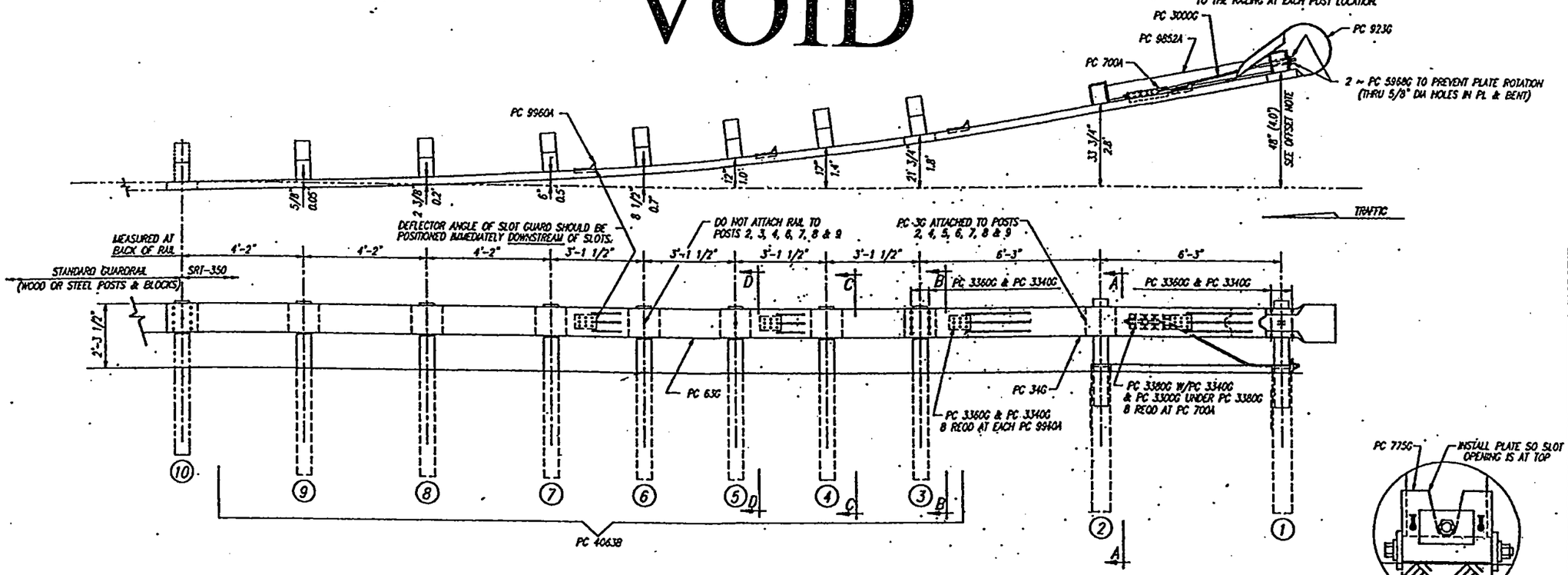

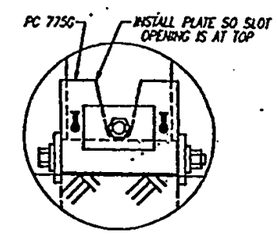

BEARING PLATE ORIENTATION

BILL OF MATERIAL		
PC	QTY	DESCRIPTION
3G	7	12/12'/BACKUP (GUARDRAIL)
34G	1	12/12'6/S SRT-1 (GUARDRAIL)
63G	1	12/25'0/6'3/S SRT-350(GUARDRAIL)
700A	1	CABLE ANCHOR BRACKET
705G	1	2'0" x 5 1/2" PIPE
736G	2	5'0 TUBE SLEEVE
766G	2	1/4 x 18 x 24 SOIL PLATE
775G	1	5/8 x 8 x 8 BEARING PLATE
923G	1	12/BARRIER/58" (TERMINAL)
3000G	1	3/4 x 6'8 CABLE
3300G	21	5/8" WASHER
3320G	1	3/16 x 1 3/4 x 3 WASHER
3340G	68	5/8" HEX NUT
3360G	45	5/8"ø x 1 1/4" SPLICE BOLT
3380G	8	5/8"ø x 1 1/2" HEX HD BOLT
3478G	4	5/8"ø x 7 1/2" HEX HD BOLT
3497G	2	5/8"ø x 9 1/2" HEX HD BOLT
3500G	2	5/8"ø x 10" POST BOLT
3580G	7	5/8"ø x 18" POST BOLT
3900G	1	1" WASHER
3910G	2	1" HEX NUT
4063B	7	6'0 POST 8 x 8
4075B	7	14" BLOCK 6 x 8
4147B	2	3' 9 POST 5 1/2 x 7 1/2
5968G	2	16d NAIL SKT
9852A	1	STRUT ASSEMBLY
9960A	4	SLOT GUARD
9961G	1	3/8 x 3 x 4 PLATE WASHER

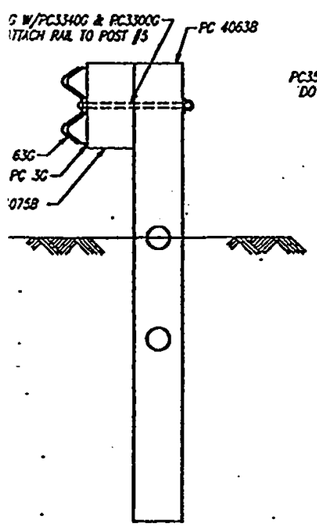

SECTION "D-D"
(@ POST #5)

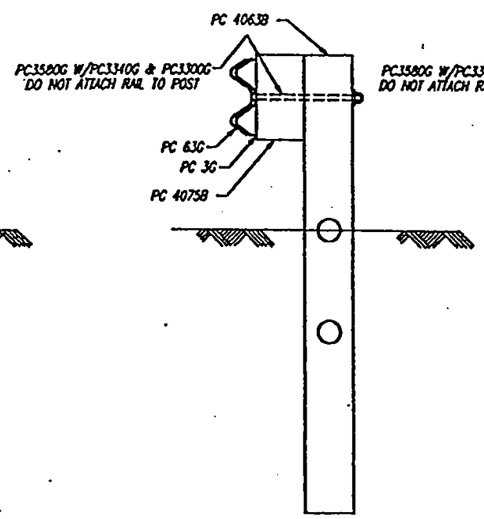

SECTION "C-C"
(@ POSTS #4, #6, #7, #8 & #9)

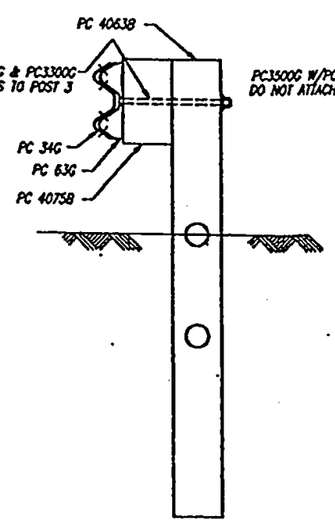

SECTION "B-B"
(@ POST #3)

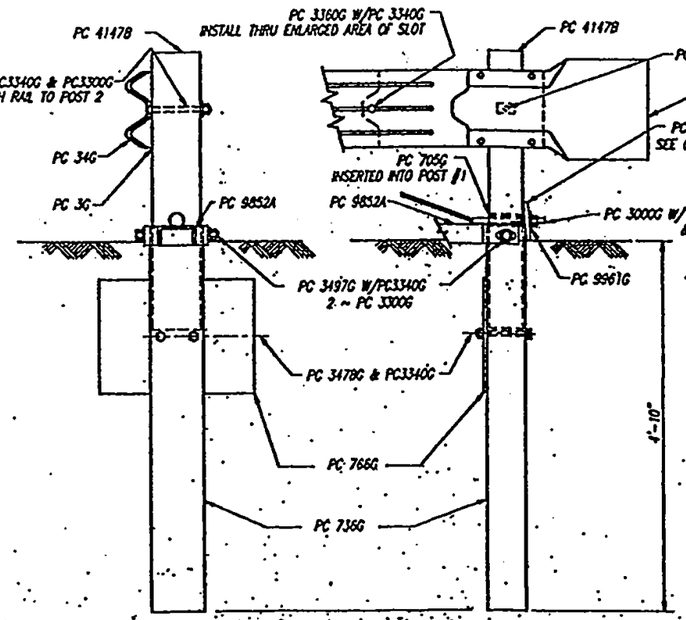

SECTION "A-A"
(@ POST #2)

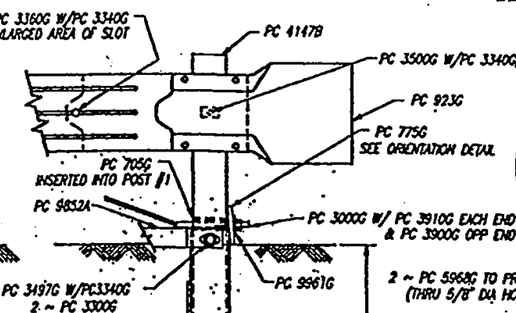

ENLARGED VIEW @ POST #1

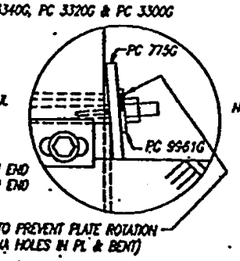

NOTE: IF POSTS ARE TO BE INSTALLED THROUGH CONCRETE PAVEMENT, REFER TO THE INSTALLATION INSTRUCTIONS.

This drawing and the information shown thereon is the sole property of TRINITY INDUSTRIES, INC. Neither the drawing nor such information is to be used for any purpose other than that for which it was specifically furnished by TRINITY INDUSTRIES, INC., nor is any reproduction authorized without written permission.

JUL 2 2 1997

REV.	CHK'D	BY	DATE	REMARKS
.2		RMH	7-21-97	ADDED NOTE ABOUT NCHRP 350 TL3
1		RH	3-4-97	ADDED NOTE

SYRO SRT-350

SLOTTED RAIL TERMINAL SRT-350
POST LAYOUT AND ERECTION DETAILS
(25, 9 POST)

CUSTOMER | P.O. No.

DRAWN: B. TAKACH
CHECKED
APPROVED
DATE: 12-26-96
DWG. FILE #: SS428A
SHEET: E1 OF 1
DRAWING No.: SS 428 REV. 2

TRINITY INDUSTRIES, INC. SYRO
DALLAS, TX CONTERNILL ST. | GRAND, OH LIMA, OH | FORT WORTH, TX ELIZABETHTOWN, KY