APPROVED AS NCHRP 350 T3 TERMINAL
VIA ADOT PRIDE PROGRAM: 11/26/02
THIS DRAWING: 9/30/03

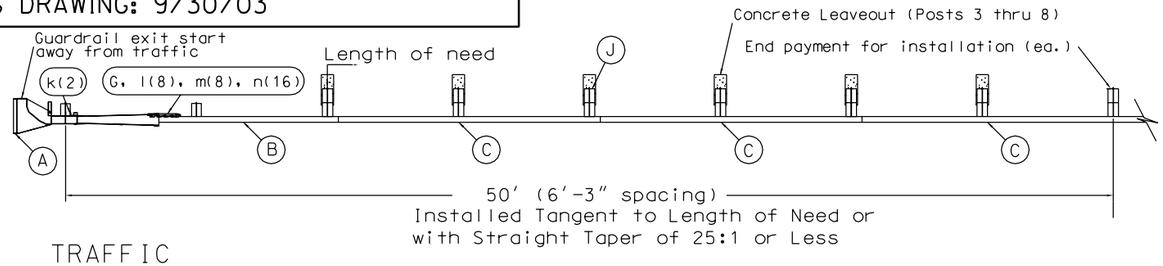

TRAFFIC

PLAN

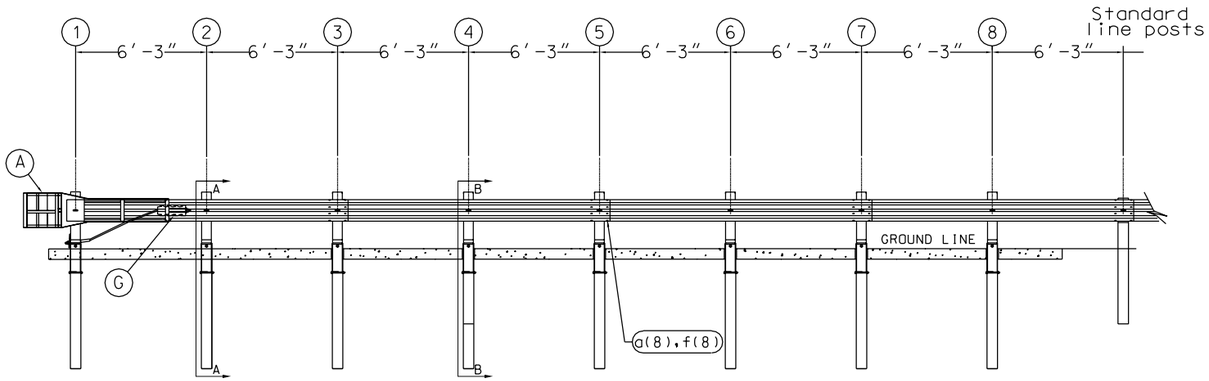

ELEVATION

GENERAL NOTES:
1. Breakaway posts are required with the Sequential Kinking Terminal.
2. All bolts, nuts, cable assemblies, cable anchors and bearing plates shall be galvanized.
3. The SKT can be flared at a rate of 25:1 to prevent the impact head from encroaching on the shoulder. The flare is not required and may be decreased or eliminated for specific installations.
4. The soil tubes shall not protrude more than 4" above ground (measured along a 5' cord). Site grading may be necessary to meet this requirement.
5. The soil tubes may be driven with an approved driving head. Soil tubes should not be driven with the post in the tube. If the tubes are placed in drilled holes, the backfill material must be satisfactorily compacted to prevent settlement.
6. When rock is encountered during excavation, a 12" Dia. post hole, 20" into the rock may be used if approved by the engineer. Granular material will be placed in the bottom of the hole approx. 2.5" deep to provide drainage. The soil tubes will be field cut to length, placed in the hole and backfilled with adequately compacted material excavated from the hole.
7. The breakaway cable assembly must be taut. A locking device, (vice-grips or channel-lock pliers) should be used to prevent the cable from twisting when tightening nuts.
8. A special site evaluation should be considered prior to using the SKT where there is less than 25' between the outlet side of the SKT and any adjacent driving lane.
9. The wood blockouts should be "toe-nailed" to the wood posts to prevent them from turning when the wood shrinks.
10. Guardrail splice shall be overlapped in the direction of adjacent traffic.
11. Leaveout geometry is only recommended for wood or steel breakaway posts.

Code	QTY	BILL OF MATERIALS	ITEM #
A	1	IMPACT HEAD	S3000
B	1	W-BEAM GUARDRAIL END SECTION, 12 GA., 12.5'	FS1303
C	3	W-BEAM GUARDRAIL, 12 GA., 12.5' RAIL ELEMENTS	G1203
D	8	FOUNDATION SOIL TUBE, 6" x 8" x 6'-0"	E731
E	1	PIPE SLEEVE	E740
F	1	BEARING PLATE, 8" x 8" x 5/8"	E750
G	1	CABLE ANCHOR BOX	S760
H	1	BCT CABLE ANCHOR ASSEMBLY	E770
J	8	5.5" x 7.5" x 45" WOOD POSTS	P650
K	6	6" x 8" x 14" TIMBER BLOCKOUT	P675
		HARDWARE	
a	32	5/8" Dia. x 1 1/4" SPLICE BOLT	B580122
b	8	5/8" Dia. x 7 1/2" HEX BOLT	B580754
c	8	5/8" Dia. x 10" HEX BOLT	B581004
d	1	5/8" Dia. x 10" H.G.R. BOLT (Post 2 only)	B581002
e	6	5/8" Dia. x 18" H.G.R. BOLT (Posts 3-8)	B581802
f	55	5/8" Dia. H.G.R. NUT	N050
g	23	H.G.R. WASHER	W050
h	2	1" ANCHOR CABLE HEX NUT	N100
j	2	1" ANCHOR CABLE WASHER	W100
k	2	3/8" x 3" LAG SCREW	E350
l	8	CABLE ANCHOR BOX SHOULDER BOLTS	SB58A
m	8	1/2" A325 STRUCTURAL NUTS	N055A
n	16	1 1/16" OD X 9/16" ID A325 STR. WASHER	W050A

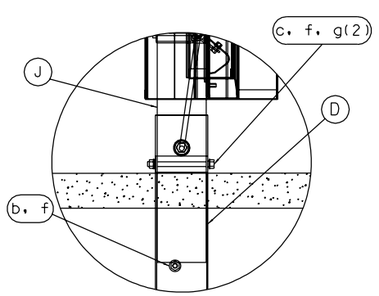

FRONT VIEW OF POST 1

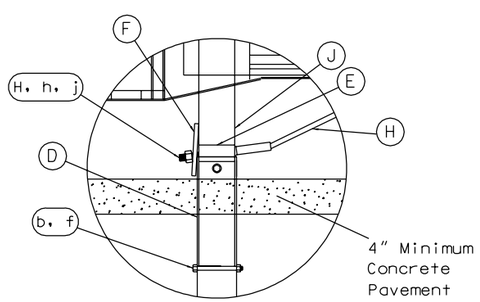

SIDE VIEW OF POST 1

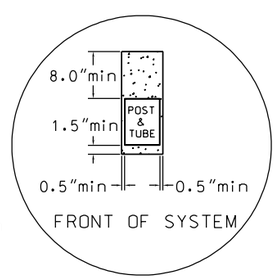

LEAVEOUT DETAIL

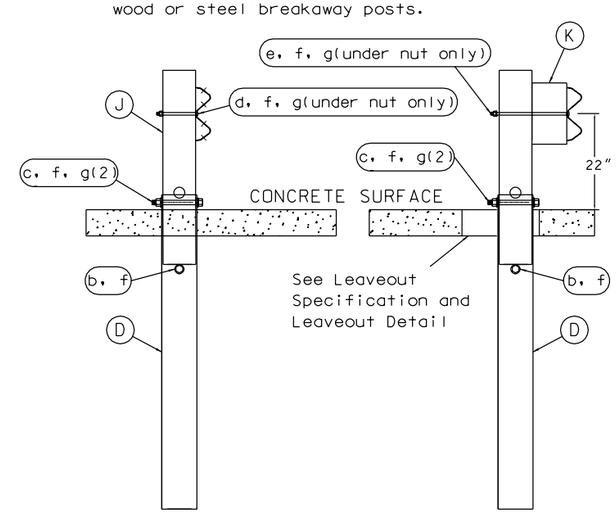

SECTION A-A
at Post 2

SECTION B-B
typical at Post 3 thru 8

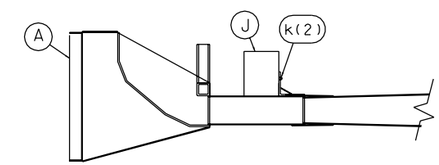

IMPACT HEAD CONNECTING DETAIL

Concrete Leaveout Specification:

For posts 3 through 8, the paving surface shall have a leaveout that is a minimum of 1.5" in front, 0.5" beside, and 8" behind the breakaway posts to the full depth of the paving. After placement of the system, this opening shall be filled with a one-sack grout mix or alternate materials as approved by the State.

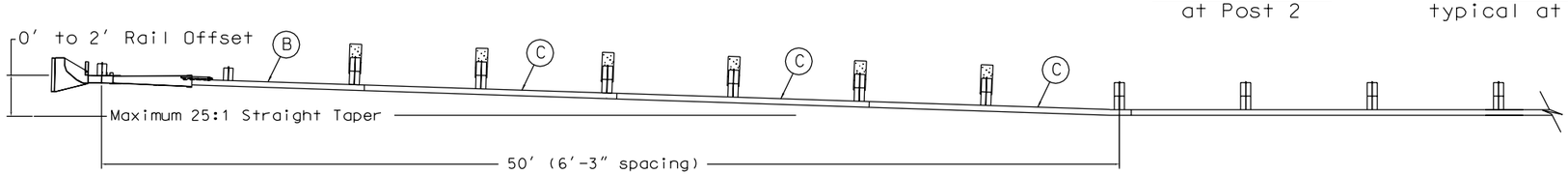

DETAIL A
optional flared installation, 25:1 maximum flare rate

Road Systems, Inc.
Big Spring, TX
Phone: 915-263-2435
or Phone: 330-346-0721

SEQUENTIAL KINKING TERMINAL
SKT-350 ASSEMBLY
PAVING INSTALLATION

Sheet:	Date:	Drawing Name:	Scale:	By:	Rev:
A1	09/15/03	SKT-W-8US-AZ LEAVEOUT	NONE	JRR	0

CONCRETE PAVEMENT INSTALLATION