APPROVED AS NCHRP T3 TERMINAL VIA ADOT PRIDE PROGRAM 9/20/07

NOTE:

INSTALL RAIL PARALLEL TO ROADWAY EDGE LINE. WHEN TAPER IS REQUIRED BY DESIGN ENGINEER, A 25:1 TAPER OVER THE LENGTH OF SYSTEM IS ALLOWABLE.

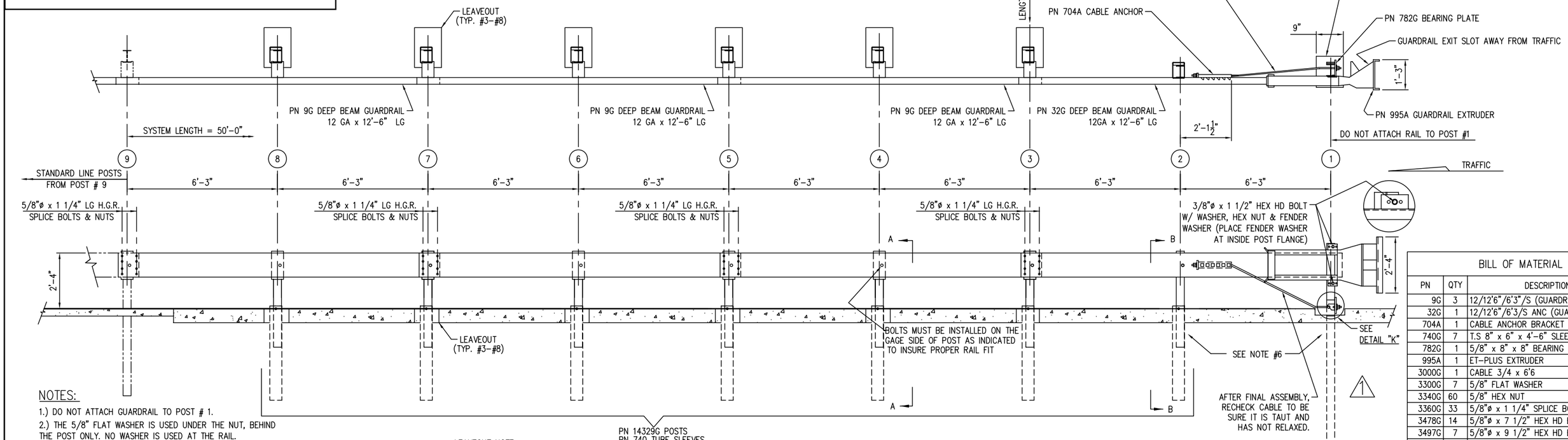

NOTES:

1.) DO NOT ATTACH GUARDRAIL TO POST # 1.
2.) THE 5/8" FLAT WASHER IS USED UNDER THE NUT, BEHIND THE POST ONLY. NO WASHER IS USED AT THE RAIL.
3.) MANUFACTURER SUGGESTS CUSTOMER TO PROVIDE REFLECTORIZATION OF TERMINAL.
4.) PLASTIC OFFSET BLOCKS (ROUTED) ARE ACCEPTABLE ALTERNATES.
5.) THIS VERSION OF ET–PLUS IS FOR USE IN CONCRETE PAVEMENT WITH A MINIMUM PAVEMENT DEPTH OF 6"
6.) LEAVEOUTS ARE NOT REQUIRED AT POSTS #1 & #2.
7.) REFER TO MANUFACTURERS' INSTALLATION MANUAL FOR ADDITIONAL INSTRUCTIONS.

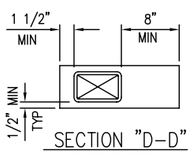

SECTION "D–D"
LEAVEOUT DETAIL

LEAVEOUT NOTE:

AT POSTS 3 THRU 8, THE PAVING SURFACE SHALL HAVE "LEAVEOUTS". THE LEAVEOUT SHALL BE A MINIMUM OF 1.5" IN FRONT, 0.5" BESIDE & 8" BEHIND THE STEEL FOUNDATION TUBE TO THE FULL DEPTH OF PAVEMENT. AFTER PLACEMENT OF SYSTEM, THIS OPENING SHALL BE FILLED WITH A ONE–SACK GROUT MIX OR ALTERNATE MATERIALS APPROVED BY THE STATE.

CONCRETE PAVEMENT WILL BE PLACED UP AGAINST THE FOUNDATION TUBES AT POSTS 1 & 2, LEAVEOUTS ARE NOT REQUIRED.

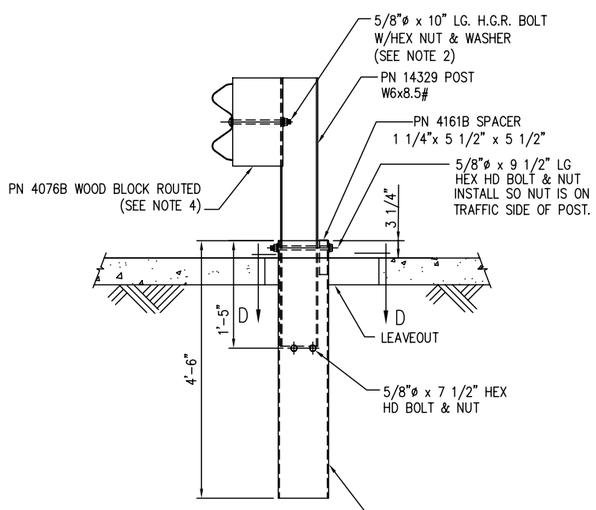

SECTION "A–A"
(TYP @ POSTS #3 THRU #8)

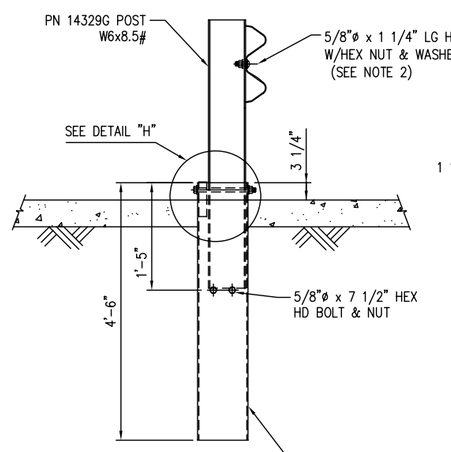

SECTION "B–B"
(POST #2)

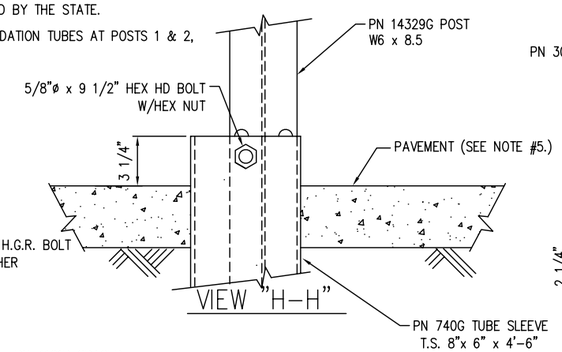

VIEW "H–H"

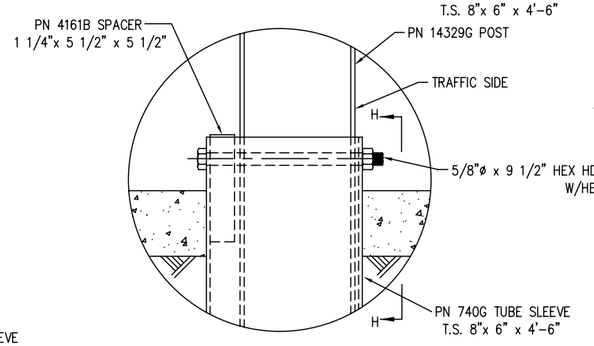

DETAIL "H"
(POST #2)

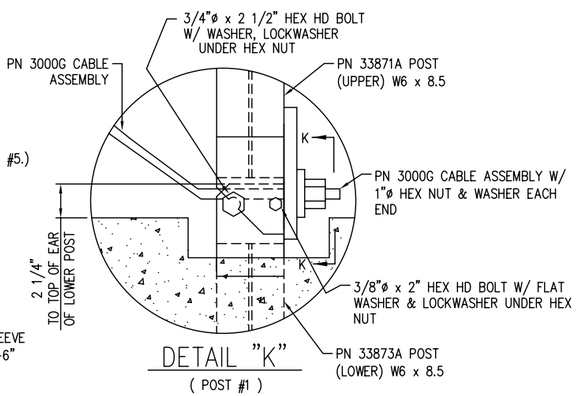

DETAIL "K"
(POST #1)

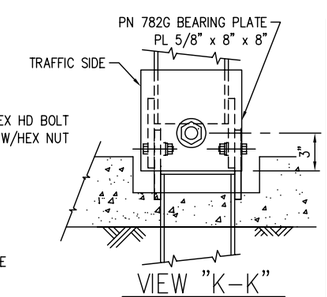

VIEW "K–K"

BILL OF MATERIAL

PN	QTY	DESCRIPTION
9G	3	12/12'6"/6'3"/S (GUARDRAIL)
32G	1	12/12'6"/6'3/S ANC (GUARDRAIL)
704A	1	CABLE ANCHOR BRACKET
740G	7	T.S 8" x 6" x 4'–6" SLEEVE
782G	1	5/8" x 8" x 8" BEARING PLATE
995A	1	ET–PLUS EXTRUDER
3000G	1	CABLE 3/4 x 6'6
3300G	7	5/8" FLAT WASHER
3340G	60	5/8" HEX NUT
3360G	33	5/8"ø x 1 1/4" SPLICE BOLT
3478G	14	5/8"ø x 7 1/2" HEX HD BOLT
3497G	7	5/8"ø x 9 1/2" HEX HD BOLT
3500G	6	5/8"ø x 10" POST BOLT
3701G	2	3/4" FLAT WASHER
3704G	2	3/4" HEX NUT
3717G	2	3/4"ø x 2 1/2" HEX HD BOLT (A325)
3900G	2	1" FLAT WASHER
3910G	2	1" HEX NUT
4076B	6	WD BLOCK 1'2 x 6 x 8 DR
4161B	7	HDPE SPACER
4254G	4	3/8" FLAT WASHER
4255G	2	3/8" FENDER WASHER (1 1/2 OD)
4258G	2	3/8" LOCKWASHER
4261G	2	3/8"ø x 1 1/2" HEX HD BOLT (GR–5)
4699G	2	3/4" LOCK WASHER
6321G	2	3/8"ø x 2" HEX HD BOLT (GR–5)
6405G	4	3/8" HEX NUT
14329G	7	SYTP POST ET PLUS #2–8 TOP
33871A	1	POST ET PLUS HBA #1 TOP
33873A	1	POST ET PLUS HBA #1 BOTTOM

REV.	CHK'D	BY	DATE	REMARKS
1	BT	LH	8/06/07	REMOVED NOTE ABOUT POST #1 BEING BREAK–AWAY POST IN SLEEVE.

ET–PLUS

ET–PLUS – 50'–0" [ARIZONA]
WITH 12'–6" PANELS, 7 SYT POSTS IN TUBE SLEEVES
& 1 HBA POST ON CONCRETE W/LEAVEOUTS
PLAN, ELEVATION & SECTION

TRINITY HIGHWAY SAFETY PRODUCTS INC.
2525 STEMMONS FREEWAY, DALLAS, TX 75207

DRAWN	LH
CHECKED	B.T.
SCALE	N.T.S.
DATE	8/01/06
ENG. FILE #	SS409–01E
SHT.No.	E1 OF 1
DRAWING NO.	SS 409
REV.	1

This drawing and the information shown thereon is the sole property of TRINITY H.S.P. INC. Neither the drawing nor such information is to be used for any purpose other than that for which it was specifically furnished by TRINITY H.S.P. INC., nor is any reproduction authorized without written permission.

CONCRETE PAVEMENT INSTALLATION