APPROVED AS NCHRP 350 T3 TERMINAL
VIA ADOT PRIDE PROGRAM 05/22/02
THIS REVISION 09/30/03

NOTE:
INSTALL RAIL PARALLEL TO ROADWAY EDGE LINE.
WHEN TAPER IS REQUIRED BY DESIGN ENGINEER,
A 25:1 TAPER OR FLATTER FLARE OVER THE LENGTH
OF THE SYSTEM CAN BE USED.

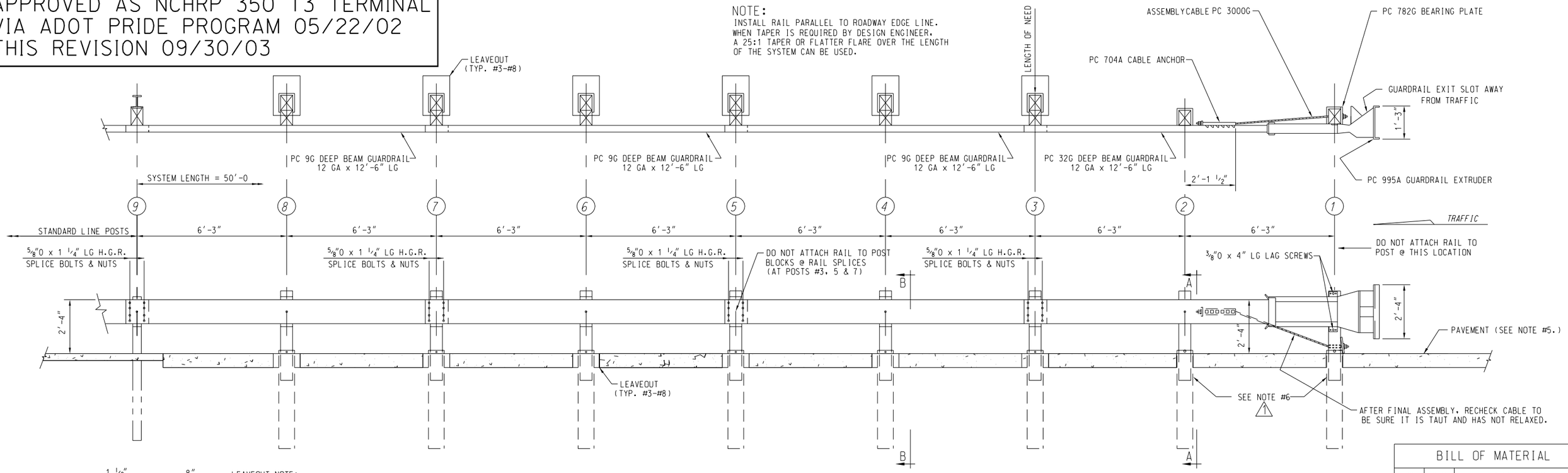

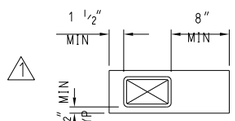

SECTION "D-D"
LEAVEOUT DETAIL

LEAVEOUT NOTE:
AT POSTS 3 THRU 8, THE PAVING SURFACE SHALL HAVE "LEAVEOUTS". THE LEAVEOUT SHALL BE A MINIMUM OF 1.5" IN FRONT, 0.5" BESIDE & 8" BEHIND THE STEEL FOUNDATION TUBE TO THE FULL DEPTH OF PAVEMENT. AFTER PLACEMENT OF SYSTEM, THIS OPENING SHALL BE FILLED WITH A ONE-SACK GROUT MIX OR ALTERNATE MATERIALS APPROVED BY THE STATE.

CONCRETE PAVEMENT WILL BE PLACED UP AGAINST THE FOUNDATION TUBES AT POSTS 1 & 2, LEAVEOUTS ARE NOT REQUIRED.

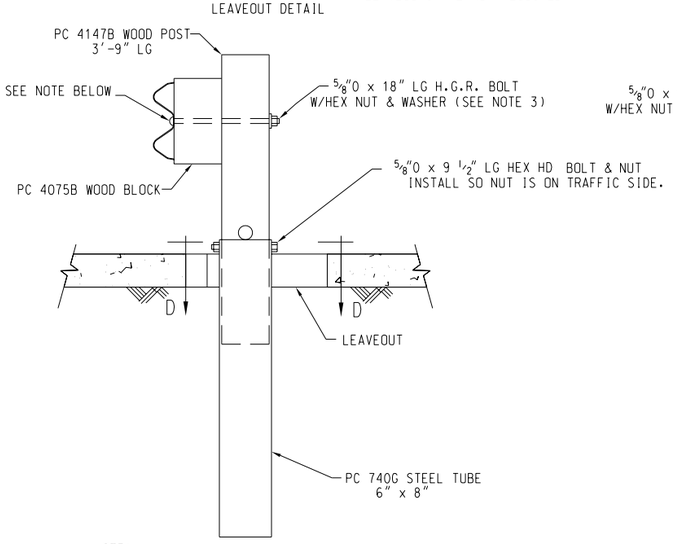

NOTE:
SECTION "B-B" IS SIMILAR @ POSTS #3, 5 & 7
EXCEPT RAIL IS NOT ATTACHED.

SECTION "B-B"
(TYP @ POSTS #4, 6 & 8)

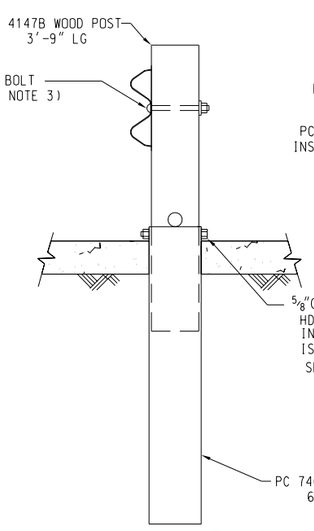

SECTION "A-A"
(@ POST #2)

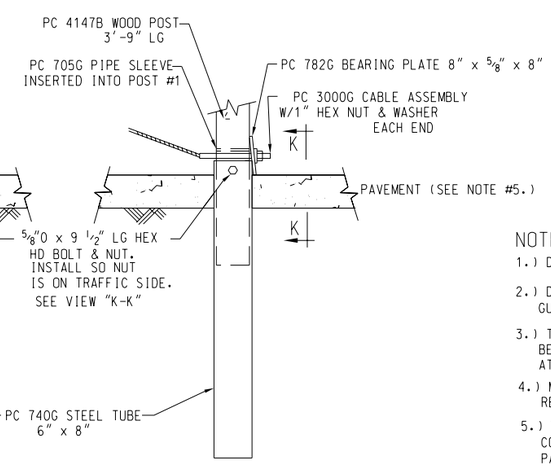

PARTIAL VIEW @ POST #1
DO NOT ATTACH GUARDRAIL TO POST

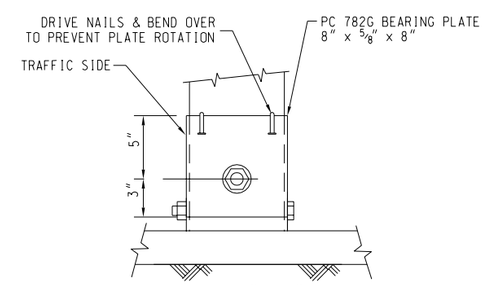

VIEW "K-K"
BEARING PLATE ORIENTATION

BILL OF MATERIAL

PC	QTY	DESCRIPTION
9G	3	12/12'6/6'3/S (GUARDRAIL)
32G	1	12/12'6/6'3/S ANC (GUARDRAIL)
704A	1	CABLE ANCHOR BRACKET
705G	1	2" x 5 1/2" PIPE
740G	8	4'-6" TUBE SLEEVE
782G	1	5/8" x 8" x 8" BEARING PLATE
995A	1	ET-PLUS EXTRUDER
3000G	1	CABLE 3/4 x 6'6
3300G	7	5/8" WASHER
3340G	47	5/8" HEX NUT
3360G	32	5/8"Ø x 1 1/4" SPLICE BOLT
3497G	8	5/8"Ø x 9 1/2" HEX HD BOLT
3500G	1	5/8"Ø x 10" POST BOLT
3580G	6	5/8"Ø x 18" POST BOLT
3900G	2	1" WASHER
3910G	2	1" HEX NUT
4075B	6	WD BLOCK 1'2 x 6 x 8 DR
4147B	8	WD 3'9 POST 5 1/2 x 7 1/2
4228G	2	3/8"Ø x 4" LAG SCREW

NOTES:
1.) DO NOT ATTACH GUARDRAIL TO POST # 1.
2.) DO NOT ATTACH GUARDRAIL TO POST BLOCKS AT GUARDRAIL LAP SPLICES. (AT POSTS #3, 5 & 7)
3.) THE 5/8" FLAT WASHER IS USED UNDER THE NUT, BEHIND THE POST ONLY. NO WASHER IS USED AT THE RAIL.
4.) MANUFACTURER SUGGESTS CUSTOMER TO PROVIDE REFLECTORIZATION OF TERMINAL.
5.) THIS VERSION OF ET-PLUS IS FOR USE IN CONCRETE PAVEMENT WITH A MINIMUM PAVEMENT DEPTH OF 6"
6.) LEAVEOUTS ARE NOT REQUIRED AT POSTS #1 & #2.

REV.	CHK'D	BY	DATE	REMARKS
1		LH	9/16/03	ADDED LEAVEOUTS AT POSTS #3 - #8, ADDED NOTE #6

ET-PLUS

ET-PLUS 50' WITH 12'-6' RAILS
& 8 POST SLEEVES
CONCRETE PAVEMENT INSTALLATION/ARIZONA
PLAN, ELEVATION & SECTION

TRINITY INDUSTRIES, INC.
HIGHWAY SAFETY PRODUCTS
2525 STEMMONS FREEWAY,
DALLAS, TX 75207

DRAWN	LH
CHECKED	
SCALE	N.T.S.
DATE	01-06-03
ENG. FILE #	SS359-01E
SHT.No.	E1 OF 1
DRAWING NO.	SS-359
REV.	1

This drawing and the information shown thereon is the sole property of TRINITY INDUSTRIES, INC. Neither the drawing nor such information is to be used for any purpose other than that for which it was specifically furnished by TRINITY INDUSTRIES, INC., nor is any reproduction authorized without written permission.

CONCRETE PAVEMENT INSTALLATION