APPROVED AS NCHRP 350 T3 TERMINAL VIA ADOT PRIDE PROGRAM 05/22/02.

REVISED 10/25/02

NOTE:
INSTALL RAIL PARALLEL TO ROADWAY EDGE LINE.
WHEN TAPER IS REQUIRED BY DESIGN ENGINEER,
A 50:1 TAPER OVER THE LENGTH OF SYSTEM IS ALLOWABLE.

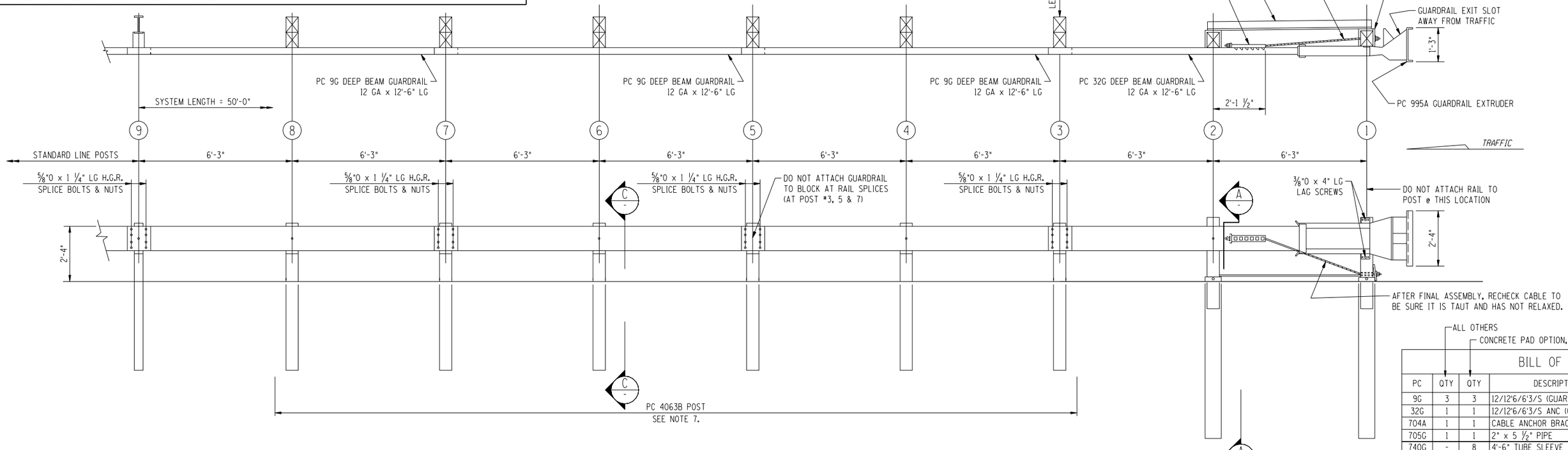

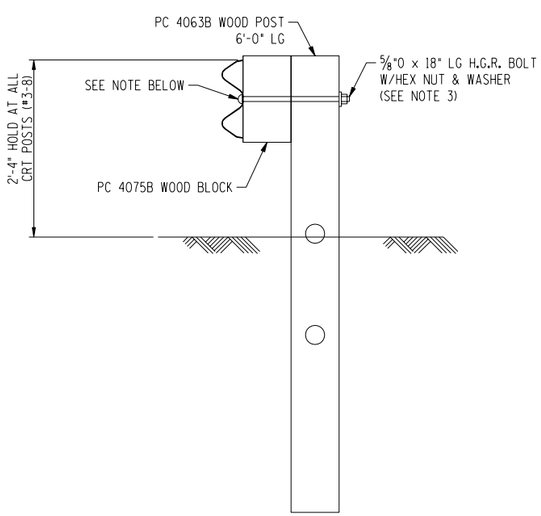

NOTE:
SECTION "C-C" IS SIMILAR @ POST #3, 5 &7 EXCEPT RAIL IS NOT ATTACHED.

SECTION "C-C"
(TYP @ POSTS #4, 6 & 8)

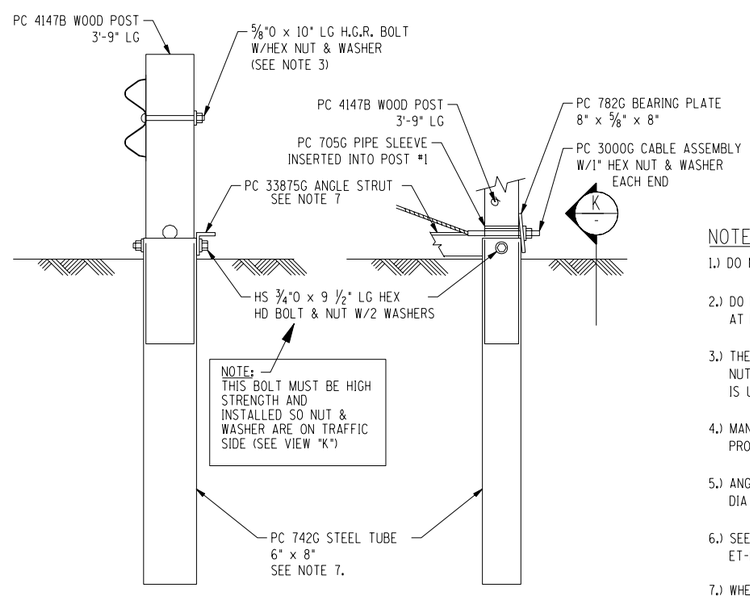

SECTION "A-A"
(@ POST #2)

PARTIAL VIEW @ POST #1
(DO NOT ATTACH GUARDRAIL TO POST)

NOTES:

1.) DO NOT ATTACH GUARDRAIL TO POST # 1.

2.) DO NOT ATTACH GUARDRAIL TO POST BLOCKS AT POST #3, 5 & 7.

3.) THE 5/8" FLAT WASHER IS USED UNDER THE NUT BEHIND THE POST ONLY. NO WASHER IS USED AT THE RAIL.

4.) MANUFACTURER SUGGESTS CUSTOMER TO PROVIDE REFLECTORIZATION OF TERMINAL.

5.) ANGLE STRUT MUST BE ATTACHED USING 3/4" DIA HIGH STRENGTH BOLTS.

6.) SEE THE STATE'S STANDARD LAYOUT DETAILS WHEN ET-PLUS IS USED WITH 6" CONCRETE PAD.

7.) WHEN CONCRETE PAD OPTION IS USED, STRUT IS ELIMINATED, ALL (8) POSTS WILL USE 4'-6" FOUNDATION SLEEVES WITH 5/8" HARDWARE. SEE BILL OF MATERIAL.

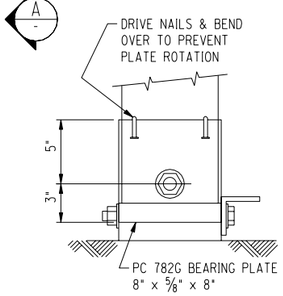

VIEW-"K"
(BEARING PLATE ORIENTATION)

ALL OTHERS
CONCRETE PAD OPTION, SEE NOTE 7.

BILL OF MATERIAL

PC	QTY	QTY	DESCRIPTION
9G	3	3	12/12'6/6'3/S (GUARDRAIL)
32G	1	1	12/12'6/6'3/S ANC (GUARDRAIL)
704A	1	1	CABLE ANCHOR BRACKET
705G	1	1	2" x 5 1/2" PIPE
740G	-	8	4'-6" TUBE SLEEVE
742G	2	-	6'-0" TUBE SLEEVE
782G	1	1	5/8" x 8" x 8" BEARING PLATE
995A	1	1	ET-PLUS EXTRUDER
3000G	1	1	CABLE 3/4 x 6'6
3300G	7	7	5/8" WASHER
3340G	39	47	5/8" HEX NUT
3360G	32	32	5/8"Ø x 1 1/4" SPLICE BOLT
3497G	-	8	5/8"Ø x 9 1/2" POST BOLT
3500G	1	1	5/8"Ø x 10" POST BOLT
3580G	6	6	5/8"Ø x 18" POST BOLT
3700G	4	-	3/4" WASHER
3704G	2	-	3/4" HEX NUT
3900G	2	2	1" WASHER
3910G	2	2	1" HEX NUT
4063B	6	-	WD 6'0 POST 6 x 8
4075B	6	6	WD BLOCK 1'2 x 6 x 8 DR
4147B	2	8	WD 3'9 POST 5 1/2 x 7 1/2
4228G	2	2	3/8"Ø x 4" LAG SCREW
5148G	2	-	3/4"Ø x 9 1/2" HEX HD BOLT
33875G	1	-	ANGLE STRUT

REV.	CHK'D	BY	DATE	REMARKS
3		BT	10/25/02	ADDED CONCRETE PAD OPTION TO BILL OF MATERIAL
2	BT	LH	5/21/02	UPDATED VIEWS
1	BT	E.A.S.	10/24/01	UPDATED VIEWS & ADDED VIEW-"K"

ET- PLUS

ET-PLUS 50'-0"
WITH 12'-6" RAILS & 2 POST SLEEVES
WITHOUT SOIL PLATE, ANGLE STRUT
PLAN, ELEVATION & SECTION, ARIZONA

TRINITY INDUSTRIES, INC.
HIGHWAY SAFETY PRODUCTS
2525 STEMMONS FREEWAY,
DALLAS, TX 75207

DRAWN	BT
CHECKED	
SCALE	N.T.S.
DATE	09/25/01
ENG. FILE #	SS334-01AZ
SHT.No.	E1 OF 1
DRAWING NO.	SS-334
REV.	3

This drawing and the information shown thereon is the sole property of TRINITY INDUSTRIES, INC. Neither the drawing nor such information is to be used for any purpose other than that for which it was specifically furnished by TRINITY INDUSTRIES, INC., nor is any reproduction authorized without written permission.