Approved as NCHRP 350 TL3 Terminal via ADOT PRIDE Program 3/97

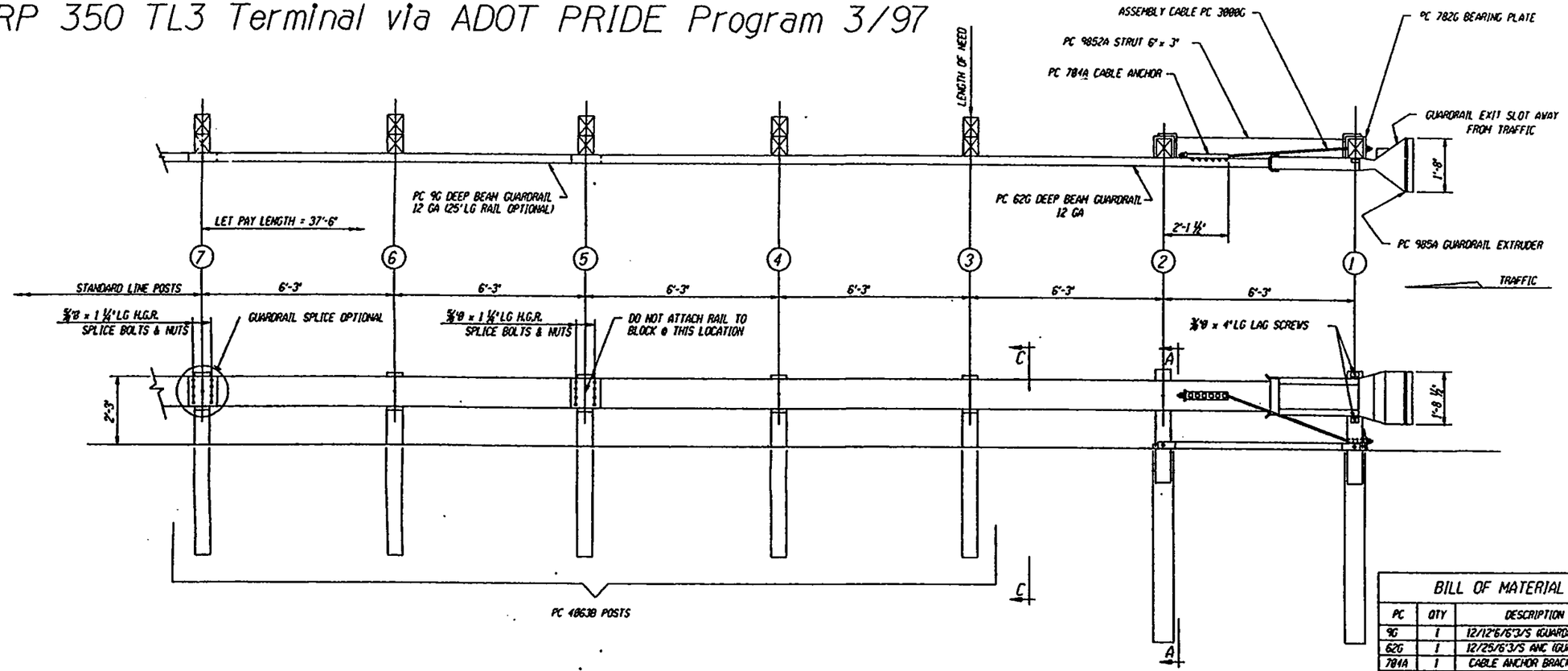

NOTES:
1.) THE 5/8" FLAT WASHER IS USED UNDER THE NUT, BEHIND THE POST ONLY. NO WASHER IS USED AT THE RAIL.
2.) MANUFACTURER SUGGESTS CUSTOMER TO PROVIDE REFLECTORIZATION OF TERMINAL.
3.) IF POSTS ARE TO BE INSTALLED THROUGH CONCRETE PAVEMENT, REFER TO THE INSTALATION INSTRUCTIONS.

BILL OF MATERIAL

PC	QTY	DESCRIPTION
9G	1	12/12'6/6'3/S (GUARDRAIL)
62G	1	12/25/6'3/S ANC (GUARDRAIL)
784A	1	CABLE ANCHOR BRACKET
785G	1	2" x 5 1/2" PIPE
732G	2	6'6 TUBE SLEEVE
782G	1	5/8" x 8" x 8" BEARING PLATE
985A	1	ET-2000 EXTRUDER
3000G	1	CABLE 3/4" x 6'6
3300G	10	5/8" WASHER
3340G	24	5/8" HEX NUT
3360G	16	5/8" x 1 1/4" SPLICE BOLT
3497G	2	5/8" x 9 1/2" HEX HD BOLT
3500G	1	5/8" x 18" POST BOLT
3580G	5	5/8" x 18" POST BOLT
3900G	2	1" WASHER
3910G	2	1" HEX NUT
4863B	5	WD 6'0 POST 6 x 8
4875B	5	WD BLOCK 1'2 x 6 x 8 DR
4147B	2	WD 3'9 POST 5 1/2 x 7 1/2
4228G	2	5/8" x 4" LAG SCREW
985SA	1	STRUT & YOKE

This drawing and the information shown thereon is the sole property of TRINITY INDUSTRIES, INC. Neither the drawing nor such information is to be used for any purpose other than that for which it was specifically furnished by TRINITY INDUSTRIES, INC., nor is any reproduction authorized without written permission.

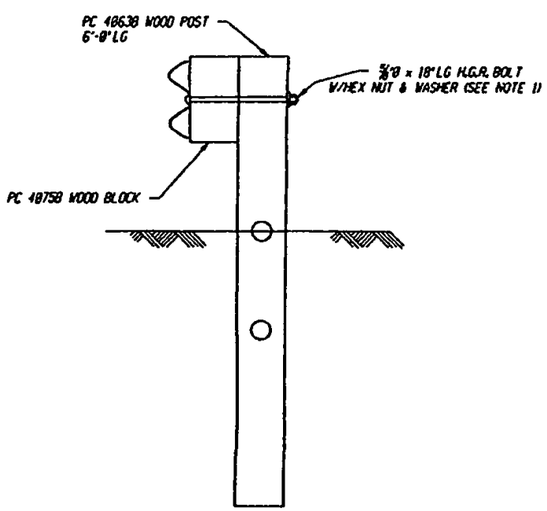

NOTE:
SECTION "C-C" IS SIMILAR @ POST #5 EXCEPT RAIL IS NOT ATTACHED.

SECTION "C-C"
(TYP @ POSTS #3, 4, 5, 6 & 7)

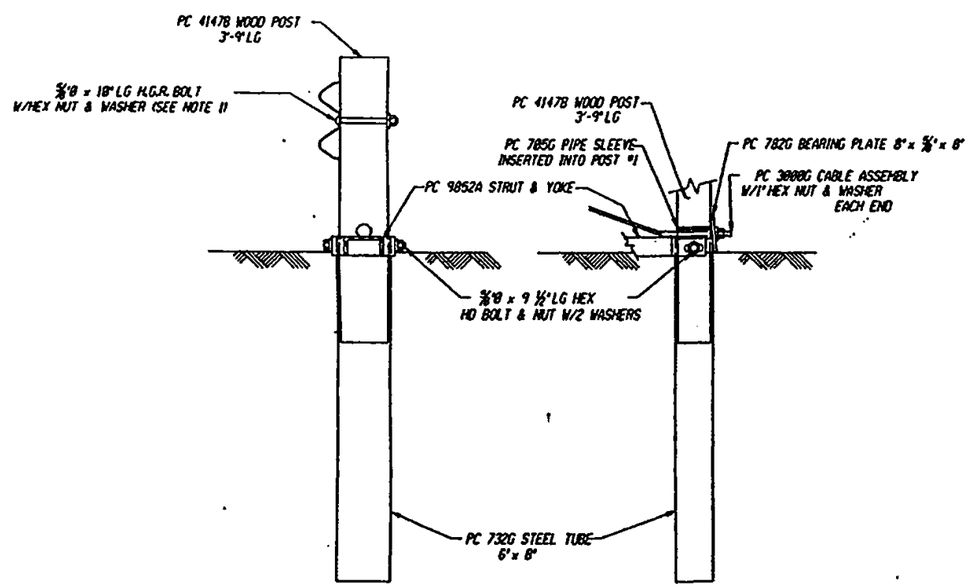

SECTION "A-A"
(@ POST #2)

PARTIAL VIEW @ POST #1

REV.	CHK'D	BY	DATE	REMARKS
1		RH	3-7-97	ADDED NOTE 3

SYRO ET2000-LET

ET2000 - LET
PLAN, ELEVATION & SECTIONS

CUSTOMER | P.O. No.

TRINITY INDUSTRIES, INC.
DALLAS, TX · CENTERVILLE, UT · GIRARD, OH · LIMA, OH · FORT WORTH, TX · ELIZABETHTOWN, KY

DRAWN	B.T.
CHECKED	
APPROVED	
DATE	12-28-96
DWG. FILE #	SS268A
SHT. No.	1 OF 1
DRAWING No.	SS 260
REV.	1