F.H.W.A. REGION	STATE	PROJECT NO.	SHEET NO.	TOTAL SHEETS	AS BUILT
9	ARIZ.				

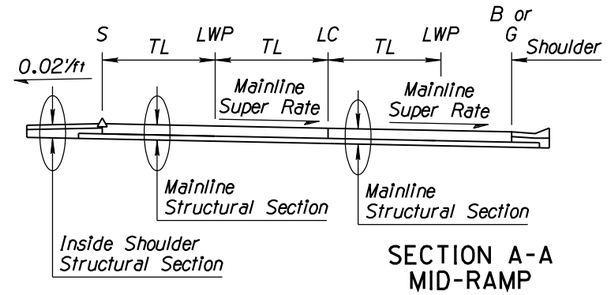

SECTION A-A
MID-RAMP

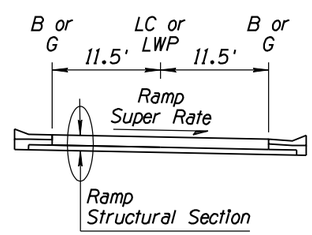

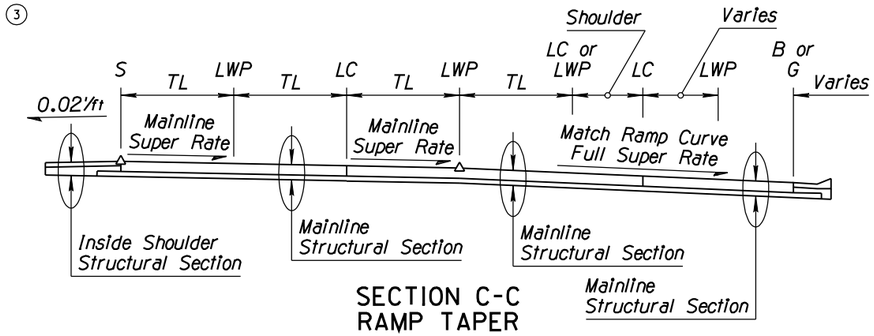

SECTION C-C
RAMP TAPER

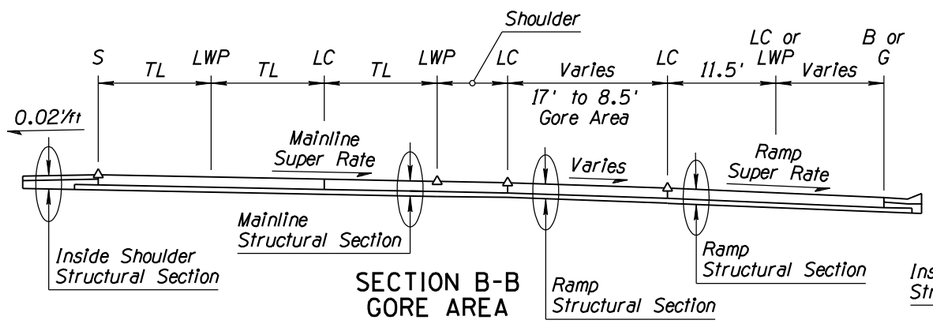

SECTION B-B
GORE AREA

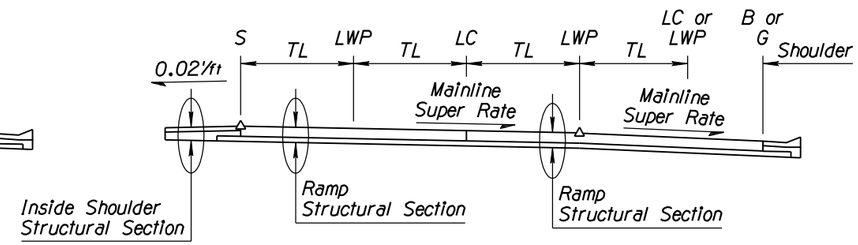

SECTION D-D
MAINLINE

GENERAL NOTES (1)

1. All joint locations shown are typical. The actual paving pour plan with joint locations shall be based upon the project paving plan submitted by the contractor and approved by the Engineer in accordance with Subsection 401-3.01 of the Standard Specifications.
2. See Std Dwg C-07.01 for joint information.
3. See plans for ramp dimensions.
4. For ramp joint spacing sequence, see Std Dwg C-7.04, Sheet 4 of 5.
5. LC and LWP joints shall be located on the edge of traffic lanes unless otherwise shown on the project plans.

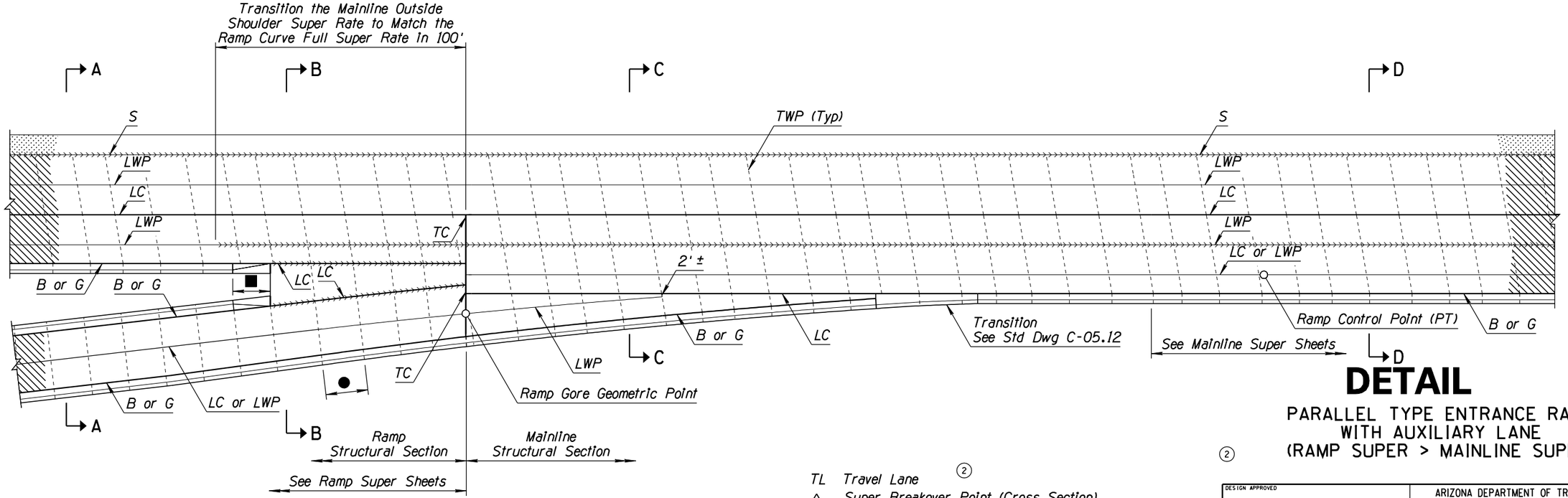

DETAIL

PARALLEL TYPE ENTRANCE RAMP
WITH AUXILIARY LANE
(RAMP SUPER > MAINLINE SUPER)

(2)

(2)

TL Travel Lane
△ Super Breakover Point (Cross Section)
→→→→ Super Breakover Point (Plan View)
■ Curb Transition, See Std Dwg C-05.12
● Spacing Varies - 18' Maximum , 11' Minimum

DESIGN APPROVED	ARIZONA DEPARTMENT OF TRANSPORTATION INTERMODAL TRANSPORTATION DIVISION ROADWAY GROUP PLANS DETAIL
Kenneth R. Cooper	
APPROVED FOR DISTRIBUTION William J. Lyons	
ROUTE / LOCATION	SHEET OF
TRACS NO.	___ OF ___

Date: 7/07/05

Note to Designer:
The information presented in this Standard Detail has been prepared in accordance with recognized engineering principles and is for general use. It should not be used for specific application without competent professional examination and verification of its suitability and applicability by a licensed professional engineer. Contents within the inner border line shall not be altered.

NO	DESCRIPTION OF REVISIONS	MADE BY	DATE
1	ADDED GENERAL NOTES	RLF	7/05
2	REVISED LEGEND DESCRIPTIONS AND DRAWING TITLE	RLF	7/05
3	MOVED TEXT OF DRAWING DESCRIPTION OFF DRAWING	RLF	7/05
4			