F.H.W.A. REGION	STATE	PROJECT NO.	SHEET NO.	TOTAL SHEETS	AS BUILT
9	ARIZ.				

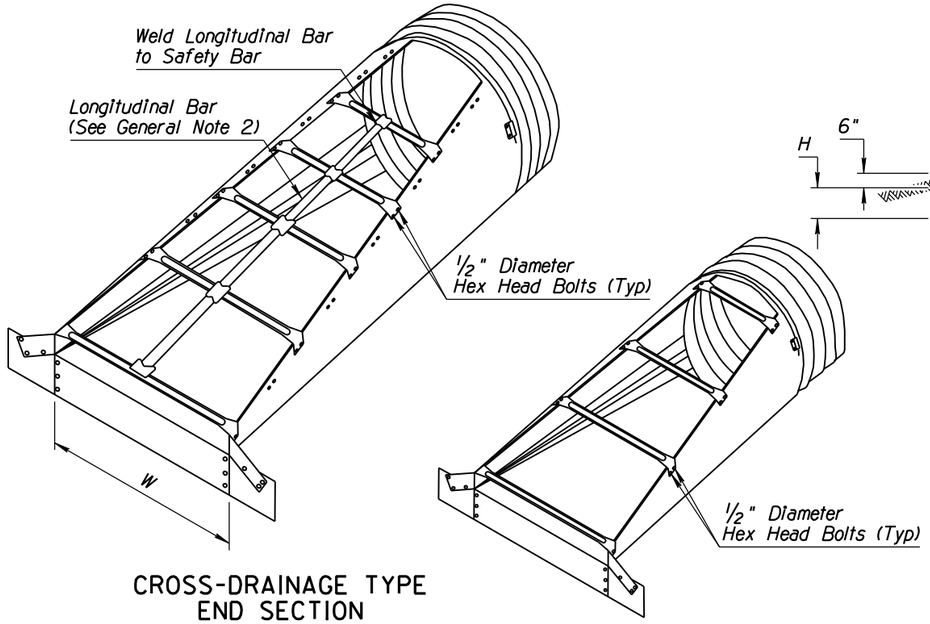

CROSS-DRAINAGE TYPE END SECTION

PARALLEL-DRAINAGE TYPE END SECTION

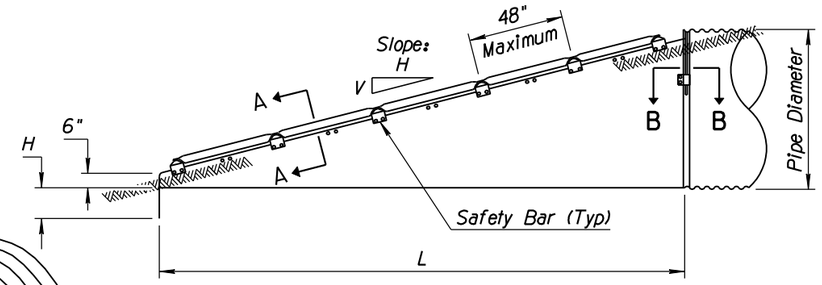

SIDE VIEW-CROSS DRAINAGE TYPE

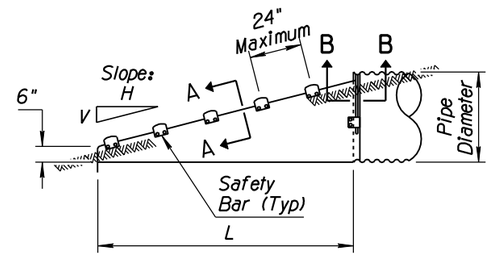

SIDE VIEW-PARALLEL DRAINAGE TYPE

GENERAL NOTES

1. The size, slope and type of end section, whether parallel or cross drainage, shall be shown on the plans.
2. A longitudinal bar is required for cross-drainage end sections when the span (W) is greater than 30". Additional longitudinal bars shall be required if spacing exceeds 30" on larger end sections.
3. Safety and longitudinal bars are not required on 30" and smaller cross-drainage end sections.

● - Top of Sloped End Section

■ - These Sizes Are Not Normally Used for Culverts by ADOT

▲ - Headwalls Are Normally Required for Pipe Sizes 48" and Larger

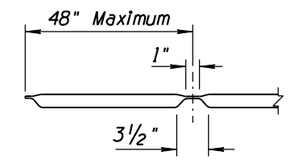

LONGITUDINAL BAR DETAIL

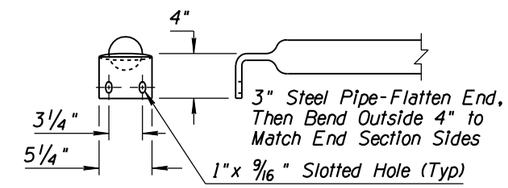

SAFETY BAR DETAIL

METAL END SECTION FOR CIRCULAR PIPES

Pipe Diameter (In)	Minimum Thickness		Dimensions (In)				L Dimensions					
	In	Gauge	A	H	W	Overall Width	Slope H:V	Length (In)	Slope H:V	Length (In)	Slope H:V	Length (In)
~~15 ■~~	~~.064~~	~~16~~	~~8~~	~~6~~	~~21~~	~~37~~	~~4:1~~	~~20~~	~~6:1~~	~~30~~	~~10:1◪~~	~~70~~
~~18 ■~~	~~.064~~	~~16~~	~~8~~	~~6~~	~~24~~	~~40~~	~~4:1~~	~~32~~	~~6:1~~	~~48~~	~~10:1◪~~	~~100~~
~~21 ■~~	~~.064~~	~~16~~	~~8~~	~~6~~	~~27~~	~~43~~	~~4:1~~	~~44~~	~~6:1~~	~~66~~	~~10:1◪~~	~~130~~
24	.064	16	8	6	30	46	4:1	56	6:1	84	10:1◪	160
30	.109	12	12	9	36	60	4:1	80	6:1	120	10:1◪	220
36	.109	12	12	9	42	66	4:1	104	6:1	156	10:1◪	280
42	.109	12	16	12	48	80	4:1	128	6:1	192	-	-
~~48 ▲~~	~~.109~~	~~12~~	~~16~~	~~12~~	~~54~~	~~86~~	~~4:1~~	~~152~~	~~6:1~~	~~228~~	-	-
~~54 ▲~~	~~.109~~	~~12~~	~~16~~	~~12~~	~~60~~	~~92~~	~~4:1~~	~~176~~	~~6:1~~	~~264~~	-	-
~~60 ▲~~	~~.109~~	~~12~~	~~16~~	~~12~~	~~66~~	~~98~~	~~4:1~~	~~200~~	~~6:1~~	~~300~~	-	-

◪ Minimum Thickness For All 10:1 Slope End Sections is 12 Guage

METAL END SECTION FOR ARCHED PIPES

Equivilant Diameter (In)	(Inches)		Minimum Thickness		Dimensions (In)				L Dimensions					
	Span	Rise	In	Gauge	A	H	W	Overall Width	Slope H:V	Length (In)	Slope H:V	Length (In)	Slope H:V	Length (In)
~~18 ■~~	~~21~~	~~15~~	~~.064~~	~~16~~	~~8~~	~~6~~	~~27~~	~~43~~	~~4:1~~	~~20~~	~~6:1~~	~~30~~	~~10:1◪~~	~~70~~
~~21 ■~~	~~24~~	~~18~~	~~.064~~	~~16~~	~~8~~	~~6~~	~~30~~	~~46~~	~~4:1~~	~~32~~	~~6:1~~	~~48~~	~~10:1◪~~	~~100~~
24	28	20	.064	16	8	6	34	50	4:1	40	6:1	60	10:1◪	120
30	35	24	.079	14	12	9	41	65	4:1	56	6:1	84	10:1◪	160
36	42	29	.109	12	12	9	48	72	4:1	76	6:1	114	10:1◪	210
42	49	33	.109	12	16	12	55	87	4:1	92	6:1	138	-	-
~~48 ▲~~	~~57~~	~~38~~	~~.109~~	~~12~~	~~16~~	~~12~~	~~63~~	~~95~~	~~4:1~~	~~112~~	~~6:1~~	~~168~~	-	-
~~54 ▲~~	~~64~~	~~43~~	~~.109~~	~~12~~	~~16~~	~~12~~	~~70~~	~~102~~	~~4:1~~	~~132~~	~~6:1~~	~~198~~	-	-
~~60 ▲~~	~~71~~	~~47~~	~~.109~~	~~12~~	~~16~~	~~12~~	~~77~~	~~109~~	~~4:1~~	~~149~~	~~6:1~~	~~222~~	-	-
~~72 ▲~~	~~83~~	~~57~~	~~.109~~	~~12~~	~~16~~	~~12~~	~~89~~	~~121~~	~~4:1~~	~~188~~	~~6:1~~	~~282~~	-	-

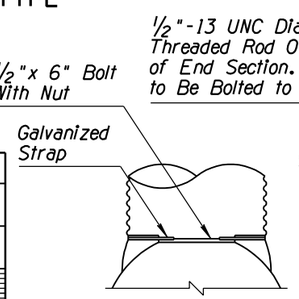

Circular Pipes 15-24"

TYPE 1 CONNECTION

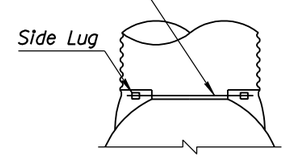

For 30" Diameter and Larger Circular Pipes, and All Arched Pipes

TYPE 2 CONNECTION

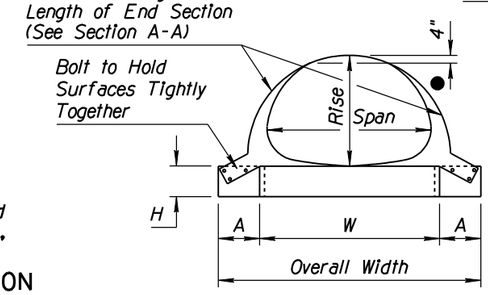

FRONT VIEW-ARCHED PIPE

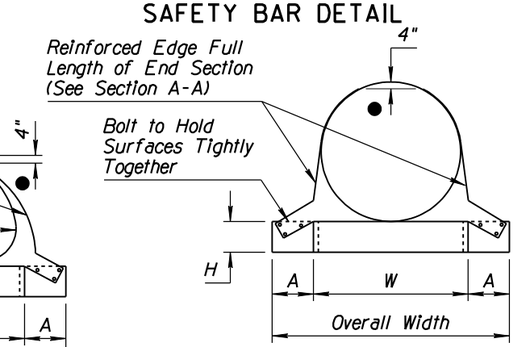

FRONT VIEW-ROUND PIPE

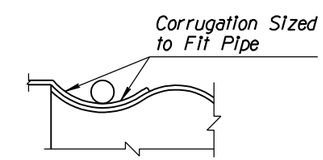

SECTION B-B

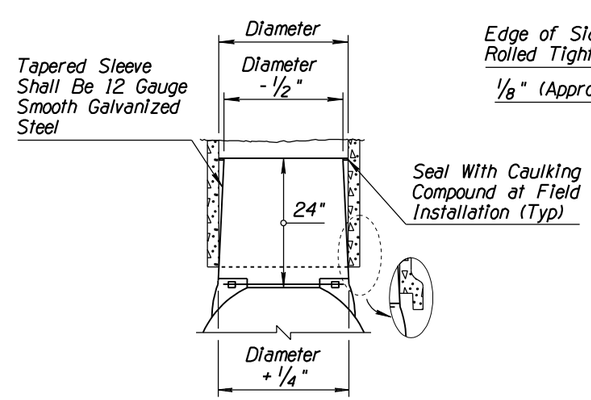

For All Concrete Pipes

TYPE 3 CONNECTION

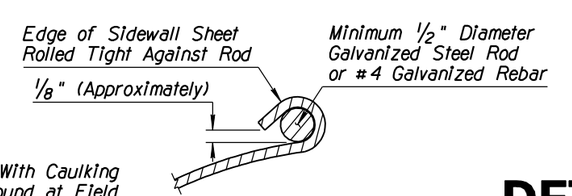

SECTION A-A

DETAIL

PIPE, METAL SAFETY END SECTION

DESIGN APPROVED: Kenneth R. Cooper	ARIZONA DEPARTMENT OF TRANSPORTATION INTERMODAL TRANSPORTATION DIVISION ROADWAY GROUP PLANS DETAIL
APPROVED FOR DISTRIBUTION: J. C. Cooper	
ROUTE / LOCATION	SHEET OF
TRACS NO.	___ OF ___

NO	DESCRIPTION OF REVISIONS	MADE BY	DATE
1	MINOR GRAPHICAL REVISONS	RLF	7/05
2	REVISED 'NOTE TO DESIGNER'	RLF	10/06
3			
4			

Date: 10/30/06

For use of this Detail X1971.dgn, see Design Memo at http://www.azdot.gov/highways/RdwyEng/RoadwayDesign/design_memos/Index.asp

Note to Designer: The information presented in this Roadway Plans Detail is for general use. Designers should satisfy themselves that their project site conditions are appropriate for use of this drawing. Contents within the inner border shall not be altered, except for the addition of the Detail designation. (2)