STATE OF ARIZONA
DEPARTMENT OF TRANSPORTATION
INTERMODAL TRANSPORTATION DIVISION
ROADWAY ENGINEERING
ROADWAY DESIGN SECTION

OCTOBER **2004**

ADOT

CONSTRUCTION STANDARD DRAWINGS

31-001

PRINTED: 10-04

Arizona Department of Transportation

Intermodal Transportation Division
Roadway Group

MEMORANDUM

To: All Users of the Roadway Construction Standard Drawings	**Date:** 20 Oct 04
From: Mary Viparina Assistant State Engineer Roadway Engineering Group	**Subject:** C-Standards Update

The Roadway Construction Standard Drawings have been revised and updated, and printed in a new, complete set. Users should obtain the new Construction Standard Drawings (October 2004 cover) from Engineering Records. Numerous revisions, additions, and deletions have occurred that are listed in the front of the new standards. Some of the significant changes include the following:

1. Removal of the Superelevation Distribution sheet, C-02.50, which is now found in the Roadway Design Guidelines;
2. Update of the Sidewalk Ramp sheets, C-05.30, to reflect current ADA guidelines;
3. Reorganization of the PCCP Joint series (C-07.xx), and addition of parallel entrance and exit ramp joint location sheets;
4. Reorganization of the Guardrail and Barrier series (C-10.xx), including the update of the Thrie Beam to Concrete Half-Barrier Transition, C-10.30 and C-10.31, and deletion of C-10.68;
5. Removal of the cage reinforcement from the half barrier adjacent to slotted drains and catch basins (C-15.92) to facilitate slip forming;
6. Reorganization of the Rail Bank series (C-17.xx), and inclusion of a Rail Bank Protection at Abutments standard drawing;
7. Consolidation of the C-18.xx series into one standard, Manhole, C-18.10;
8. Redesign of the Standard Marker, C-21.20;
9. Deletion of the Utilities series (C-22.xx and C-23.xx). These series were adopted from the Maricopa Association of Government (MAG) standards and hadn't been updated in over a decade. Designers can use the current MAG utility standards, or convert the deleted sheets into plan details, which must be sealed and signed. The deleted sheets can be found at the web address listed below; and
10. Development of special provisions for use in conjunction with many of the standard drawing. These special provisions are on the Roadway Design web site with links from and to the applicable drawings.

Design personnel should implement the updated drawings and incorporate the updates into their project plans. For projects at or near completion, where the inclusion of all new standard drawings is not practical, the 1A Sheet must accurately reflect the correct revision dates for the design. Construction personnel should review the drawing revisions for possible implementation on construction projects.

Please arrange for additional copies of the updated Standard Drawings for all users within your Group or District. Additional copies (8-1/2" x 11" or 11" x 17") may be obtained from Engineering Records located at 1655 West Jackson, Room 175, Phoenix, AZ 85007-3217 or by telephoning 602-712-8216.

An updated List of Standards (1A Sheet) is available either from the Roadway Support Desk (602-712-8667 or 602-712–8491) or on-line at the following address:
http://www.dot.state.az.us/ROADS/Rdwyeng/updates/viewable_drawings.html

Updated Summary Sheets are available on-line at the address shown above.

Please direct questions regarding this memo or the updated standards to Kenneth Cooper, Roadway Standards Engineer at 602-712-8674.

MAV/KRC/krc

cc:
Roadway Engineering Group
Traffic Group
Valley Project Management Group
Enhancement and Environmental Group
Districts (10)
Statewide Project Management Group
FHWA
Contracts and Specifications Section
Construction Group
Bridge Group
Central Maintenance Group
Regional Traffic Engineers (4)
Materials Group
Local Government Section
Engineering Consultant Services
District Permits Office (9)
Engineering Records
Michael Ortega
Dan Lance
Sam Maroufkhani
Doug Forstie
John Louis

NO	DESCRIPTION OF REVISIONS	MADE BY	DATE
1	RENAMED STD FROM C-01.10 TO C-01.10, SHEET 1 OF 4	RLF	9/04
2			
3			
4			

CONSTRUCTION DRAWING SYMBOLS

	NEW FEATURES	EXISTING FEATURES
City Limits		
County Line		
Forest or Reservation Boundry		
Property Line		
Mid-Section or Quarter-Section Line		
Right-of-Way Line		
Section Line		
Sixteenth Line		
National, State Boundry		
Township or Range Line		
Temporary Construction Easement		
Mile Post Marker	MP	MP
Right-of-Way Marker		
Survey Monument		
Angle Point or PI		
Centerline, Station Marks		
Quarter Corner		

CONSTRUCTION DRAWING SYMBOLS

	NEW FEATURES	EXISTING FEATURES
Section Corner		
Survey Control Point		
Bench Mark		
Access Control		
Sidewalk, Curb & Gutter w/Depressed Curb (1"=50' or larger)	30' DC +25	
Curb & Gutter with Depressed Curb (1"=100')		
Curb, Single with Depressed Area		
Pavement and Sidewalk Edge		
Turnout	R	R
Top of Cut	C C	
Toe of Fill	F F	
Transition, Cut to Fill	C F	
Railroad Track (1"=50' or larger)		
Railroad Track (1"=100')		
Bank Protection		
Bridge		
Building	Floor Elevation 1984.68'	Floor Elevation 1984.68'

APPROVED FOR DESIGN: Mary Viparina

APPROVED FOR DISTRIBUTION: John Bernard

STATE OF ARIZONA
DEPARTMENT OF TRANSPORTATION
ROADWAY STANDARD DRAWINGS

REV. 9/04

SYMBOL LEGEND

DRAWING NO. 1
C-01.10
Sheet 1 of 4

NO	DESCRIPTION OF REVISIONS	MADE BY	DATE
1	RENAMED STD FROM C-01.11 TO C-01.10, SHEET 2 OF 4	RLF	9/04
2			
3			
4			

CONSTRUCTION DRAWING SYMBOLS

	NEW FEATURES	EXISTING FEATURES
Catch Basin, Curb & Gutter		
Catch Basin, Median Dike		
Catch Basin, Off Roadway, Flush		
Catch Basin, Single Curb		
Cattle Guard		
Concrete Box Culvert		
Dike, Median		
Dike		
Downdrain, one way	+45 35'	
Downdrain, two way	+45 35'	
Manhole		
Manhole, Frame & Cover, Reset		
Retaining Wall		
Rock Riprap		
Spillway, one way	+45 35'	
Spillway, two way	+45 35'	

CONSTRUCTION DRAWING SYMBOLS

	NEW FEATURES	EXISTING FEATURES
Straight Hdwl w/End Sct, Pipe (1"=20') (All Dia)		
Straight Hdwl w/End Sct, Pipe (1"=50' or smaller) (Dia=42" and larger)		
Straight Hdwl w/End Sct, Pipe (1"=50' or smaller) (Dia=36" and smaller)		
"U" Hdwl w/End Sct, Pipe (1"=20') (All Dia)		
"U" Hdwl w/End Sct, Pipe (1"=50' or smaller) (Dia=42" and larger)		
"U" Hdwl w/End Sct, Pipe (1"=50' or smaller) (Dia=36" and smaller)		
Wing Hdwl w/End Sct, Pipe (1"=20') (All Dia)		
Wing Hdwl w/End Sct, Pipe (1"=50' or smaller) (Dia=42" and larger)		
Wing Hdwl w/End Sct, Pipe (1"=50' or smaller) (Dia=36" and smaller)		
"L" Hdwl w/End Sct, Pipe (1"=20') (All Dia)		
"L" Hdwl w/End Sct, Pipe (1"=50' or smaller) (Dia=42" and larger)		
"L" Hdwl w/End Sct, Pipe (1"=50' or smaller) (Dia=36" and smaller)		
Pipe Ext W/End Sct & Berm (1"=20') (All Dia)		
Pipe Ext W/End Sct & Berm (1"=20') (1"=50' or smaller) (Dia=42" and larger)		
Pipe Ext W/End Sct & Berm (1"=20') (1"=50' or smaller) (Dia=36" and smaller)		
Pipe Ext W/End Sct Roadway Widening (1"=20')	F F	

APPROVED FOR DESIGN: Mary Vipanna	STATE OF ARIZONA DEPARTMENT OF TRANSPORTATION ROADWAY STANDARD DRAWINGS	REV. 9/04
APPROVED FOR DISTRIBUTION: [signature]	SYMBOL LEGEND	DRAWING NO. C-01.10 (1) Sheet 2 of 4

NO	DESCRIPTION OF REVISIONS	MADE BY	DATE
1	RENAMED STD FROM C-01.12 TO C-01.10, SHEET 3 OF 4	RLF	9/04
2			
3			
4			

CONSTRUCTION DRAWING SYMBOLS

	NEW FEATURES	EXISTING FEATURES
Plan View, Bituminous Pavement		
Plan View, Concrete Pavement		
Plan View, Graded Surface		
Plan View, Obliterate Pavement		
Plan View, Wood		
Section, Asphaltic Concrete Friction Course		
Section, Bituminous Pavement		
Section, Concrete		
Section, Metal		
Section, Wood		
Section, Aggregate Base		
Section, Ground Line		
Ground Line Profile		
Barbed Wire Fence & Gate		
Chain Link Fence & Gate		
Guardrail & Flared End Terminal		
Guardrail & Tangent End Terminal		
Gas Line	G 3" G	G 3" G

CONSTRUCTION DRAWING SYMBOLS

	NEW FEATURES	EXISTING FEATURES
Irrigation Ditch, Concrete	IR IR	IR IR
Irrigation Ditch, Earth	IR IR	IR IR
Irrigation Line (1"=20')	IR 24" IR	IR 24" IR
Irrigation Line (1"=100')	IR 24" IR	IR 24" IR
Overhead Power/Joint-Use Line	OP OP	OP OP
Overhead Telephone Line	OT OT	OT OT
Sanitary Sewer (1"=20')	S 8" S	S 8" S
Sanitary Sewer (1"=100')	S 8" S	S 8" S
Storm Drain (1"=20') & (1"=50')		SD 24" SD
Storm Drain (1"=100')		SD 36" SD
Street Light and with Mast Arm		
Telephone/Power Pedestal	T P	T P
Utility Pole with Down Guy and Anchor		
Underground Power/Joint-Use Line	P P	P P
Underground Telephone Line	T T	T T
Water/Gas Meter Box	WM GM	WM GM
Water/Gas Valve	WV GV	WV GV

APPROVED FOR DESIGN: Mary Vipana

APPROVED FOR DISTRIBUTION: Julie Everett

STATE OF ARIZONA
DEPARTMENT OF TRANSPORTATION
ROADWAY STANDARD DRAWINGS

REV. 9/04

SYMBOL LEGEND

DRAWING NO. 1
C-01.10
Sheet 3 of 4

NO	DESCRIPTION OF REVISIONS	MADE BY	DATE
1	RENAMED STD FROM C-01.13 TO C-01.10, SHEET 4 OF 4	RLF	9/04
2			
3			
4			

CONSTRUCTION DRAWING SYMBOLS

	NEW FEATURES	EXISTING FEATURES
Water Line	W 8" W	W 8" W
Drainage Channel		
Drainage Ditch	Drainage Ditch	Drainage Ditch
Major Wash		NAME
Minor Wash		
℄ Grade, Profile		
Hedge		
Palm Tree		
Shrubbery		
Unclassified Tree		
Sign, Single Post		
Sign, Multiple Post		
Dimensions		
Visible Outlines, Sections, etc...		
Index Contour Line	8650	8650
Intermediate Contour Line		

CONSTRUCTION DRAWING SYMBOLS

	NEW FEATURES	EXISTING FEATURES
Depressed Index Contour Line	8650	8650
Depressed Intermediate Contour Line		
Block Wall (1"=20')		
Median Barrier		
Fire Hydrant	FH	FH
Standpipe		SP
Transmission Tower		
Windmill		
Mail Box		
Flag Pole		
North Arrow		N

APPROVED FOR DESIGN: Mary Vipanna	STATE OF ARIZONA DEPARTMENT OF TRANSPORTATION ROADWAY STANDARD DRAWINGS	REV. 9/04
APPROVED FOR DISTRIBUTION: [signature]	SYMBOL LEGEND	DRAWING NO. 1 C-01.10 Sheet 4 of 4

NO	DESCRIPTION OF REVISIONS	MADE BY	DATE
1	RENAMED STD DWG FROM C-01.30 TO C-01.30, SHEET 1 OF 3	RLF	9/04
2			
3			
4			

WORDS	ABBREVIATION
A	
Abutment	Abt
Acceleration	Acc
Acres	Ac
Aggregate	Agg
Aggregate Base	AB
Ahead	AHD, Ahd
Alternate	Alt
Aluminum	Al
American Association of State Highway and Transportation Officials	AASHTO
American Concrete Institute	ACI
American Institute of Steel Construction	AISC
American Road and Transportation Builders Association	ARTBA
American Society for Testing Materials	ASTM
Amount	Amt
Approach	Appr
Approximate	Approx
Asphalt	Asph
Asphalt Rubber	AR
Asphalt Rubber ACFC	ARACFC
Asphaltic Concrete	AC
Asphaltic Concrete Base	ABC
Asphaltic Concrete Friction Course	ACFC
Asphaltic Concrete Surface Course	ACSC
Avenue	AVE, Ave
Average Daily Traffic	ADT
B	
Back	BK, Bk
Backfill	Bkfl
Balance	Bal
Bank Protection	BP, Bank Prt
Barbed Wire	BW
Bearing	Brg
Begin	Bgn
Begin Curb Return	BCR
Begin Full Super	BFS
Bench Mark	BM
Bevel or Beveled	Bev
Bituminous	Bit

WORDS	ABBREVIATION
B (cont)	
Bituminous Mixture	Bit Mix
Bituminous Surface Treatment	BST
Bituminous Treated Base	BTB
Black Steel Pipe	BSP
Borrow	Bor
Boulevard	BLVD, Blvd
Boundary	Bdry
Brass Cap	BC
Breakaway Cable Terminal	BCT
Bridge	Br
Building	Bldg
C	
Calculated	Calc
Cast-In-Place	C-I-P
Cast Iron	CI
Cast Iron Pipe	CIP
Catch Basin	CB
Cattle Guard	CG
Cement	Cem
Cement Treated Base	CTB
Center	Ctr
Center Line	℄
Center to Center	C to C
Channel	Chan
Class	Cl
Clear	Clr
Column	Col
Compact or Compaction	Comp
Complete In Place	C in P
Concrete	Conc
Concrete Box Culvert	CBC
Concrete Treated Base	CTB
Connection	Conn
Conduit	Cond
Construct or Construction	Cst
Continous	Cont
Coordinate	Coord
Corner	Cor
Correction	Corr
Corrugated Aluminum Pipe	CAP

WORDS	ABBREVIATION
C (cont)	
Corrugated High Density Polyethylene Plastic Pipe	CHDPEPP
Corrugated Metal Pipe	CMP
Corrugated Steel Pipe	CSP
County	Co
Crossing	X-ING
Cross Section	X-SECT
Crown	Cr
Cubic	Cu
Cubic Feet Per Second	CFS
Cubic Yard or Cubic Yards	CY, Cu Yd
Culvert	Culv
Curb and Gutter, Curb & Gutter	C&G
Curve to Spiral	CS
D	
Deceleration	Dcl
Deflection	Def
Deflection of Total Curve	I
Degree of Curve	D
Delineator	Del
Delta	Δ
Depressed Curb	DC
Design Speed	Des Spd
Detail	Dtl
Diameter	Dia
Distance	Dist
Division	Div
Double	Dbl
Drain or Drainage	Drn
Drainage Area	DA
Drawing	Dwg
Drive	Dr
Driveway	Dwy
Ductile Iron Pipe	DIP
E	
Each	Ea
Easement	Esmt
East	E
Eastbound	EB

APPROVED FOR DESIGN	STATE OF ARIZONA DEPARTMENT OF TRANSPORTATION ROADWAY STANDARD DRAWINGS	REV.
Mary Vipaina		9/04
APPROVED FOR DISTRIBUTION	GENERAL ABBREVIATIONS	DRAWING NO. 1 C-01.30 Sheet 1 of 3

NO	DESCRIPTION OF REVISIONS	MADE BY	DATE
1	RENAMED STD DWG C-01.31 TO C-01.30, SHEET 2 OF 3	RLF	9/04
2			
3			
4			

WORDS	ABBREVIATION
E (cont)	
Edge of Pavement	EP
Electric, Electricity	Elec, E
Elevation	Elev
Embankment	Emb
End Curb Return	ECR
End Full Superelevation	EFS
Engineer	Engr
Entrance	Ent
Equation	EQ, Eq
Estimate	Est
Excavation	Exc
Existing	Exst
Expansion Joint	Exp Jt
Extend or Extension	Ext
External	Ext
F	
Federal	Fed
Feet or Foot	Ft
Feet per Foot	′/′
Feet Per Second	FPS
Figure	Fig
Finish	Fin
Floor	Fl
Flow Line	FL
Footing	Ftg
Forest	Fst
Found	Fnd
Frame	Fr
Freeway	Fwy
Frontage	Frt
Furnish or Furnished	Furn
Future	Fut
G	
Gas	G
Gas Meter	GM
Gas Valve	GV
Galvanize or galvanized	Galv
Gauge	Ga
Government	Gov't
Grade	Gr
Grade Seperation	GS

WORDS	ABBREVIATION
G (cont)	
Ground	Gnd
Ground Compaction	Gnd Comp
Grubbing	Grb
Guard	Grd
Guardrail	GR
Guardrail Extruder Terminal	GET
H	
Headwall	Hdwl
Height	Ht, H, h
Height of Instrument	HI
Head Water	HW
Highway	Hwy
Horizontal	Horz
Horizontal Elliptical Reinforced Concrete Pipe	HERCP
I	
Improvement	Impr
Inch or Inches	In
Include, Included or Inclusive	Incl
Inside Diameter	ID
Invert	Inv
Irrigation	Irr
J	
Joint	Jt
Junction	Jct
L	
Laboratory	Lab
Lateral	Lat
Left	Lt
Length or Length of Curve	L
Length of Normal Crown Removal	L_C
Length of Spiral	Ls
Length of Superelevation Runoff	L_S
Line	Ln
Linear or Lineal	Lin
Linear Feet	Lin Ft
Location	Loc
M	
Manhole	MH
Material	Mtl
Maximum	Max
Median	Med

WORDS	ABBREVIATION
M (cont)	
Mile or Miles	MI
Mile Post	MP
Miles Per Hour	MPH
Mineral Aggregate	MA
Minimum	Min
Miscellaneous	Misc
Modify or Modified	Mod
Monument	Mon
Mountain	Mt
N	
National	Natl
Non-Reinforced Cast-In-Place Concrete Pipe	NRCIPCP
Normal Crown	NC
North	N
Northbound	NB
Number	No
O	
Obliterate	Obl
Original	Orig
Outside Diameter	OD
Overhead	OH
Overpass	OP
P	
Parkway	Pkwy
Pavement	Pvmt
Pedestrian	Ped
Place	Pl
Point	Pt
Point of Compound Curvature	PCC
Point of Curvature	PC
Point of Intersection	PI
Point of Reverse Curvature	PRC
Point of Tangency	PT
Point on Curve	POC
Point on Semi-Tangent	POST
Point on Spiral	POS
Point on Tangent	POT
Polyethylene	PE

APPROVED FOR DESIGN	STATE OF ARIZONA DEPARTMENT OF TRANSPORTATION ROADWAY STANDARD DRAWINGS	REV.
Mary Viparina		9/04
APPROVED FOR DISTRIBUTION	GENERAL ABBREVIATIONS	DRAWING NO. 1 C-01.30 Sheet 2 of 3

NO	DESCRIPTION OF REVISIONS	MADE BY	DATE
1	RENAMED STD DWG C-01.32 TO C-01.30, SHEET 3 OF 3	RLF	9/04
2			
3			
4			

WORDS	ABBREVIATION
P (cont)	
Polyvinyl Chloride	PVC
Portland Cement Concrete	PCC
Portland Cement Concrete Pavement	PCCP
Pounds	Lbs
Pounds Per Square Inch	PSI
Preliminary	Prelim
Prestress, Prestressed or Prestressing	PS
Project	Prj
Property Line	P/L
Proposed	Prop
Protection	Prt
Provision or Provide	Prv
Q	
Quadrant	Quad
Quantity or Quantities	Quan
Quantity of Drainage Runoff	Q
R	
Radius	R
Railroad	RR
Range	R
Reconstruct	Recst
Reference	Ref
Reinforced or Reinforcing	Reinf
Reinforced Concrete	RC
Reinforced Concrete Pipe	RCP
Reinforcing Bar	Rebar
Relocate, Relocation or Relocated	Reloc
Remove	Rem
Required	Reqd
Reservation	Resv
Residence	Res
Retain or Retaining	Ret
Revised or Revision	Rev
Right	Rt
Right-of-Way	R/W
Road	Rd
Roadway	Rdwy
Route	Rte
Rubber Gasket Reinforced Concrete Pipe	RGRCP

WORDS	ABBREVIATION
S	
Salvage	Salv
Section	Sct
Select Material	SM
Sheet	Sh
Shoulder	Shldr
Shrinkage	Shr
Sidewalk	S/W
Sight Distance, Stopping	SD_S
Single	Sgl
Skew	Sk
South	S
Southbound	SB
Special	Spcl
Specification	Spec
Spiral Rate of Change	a
Spiral To Curve	SC
Spiral To Tangent	ST
Square	Sq
Square Feet	Sq Ft
Square Yard	Sq Yd
Standard	Std
State Route	SR
Station	Sta
Street	St
Structure or Structural	Str
Subdivision	Subdiv
Subgrade	SG
Subgrade Seal	SS
Superelevation	e or Super
Surface	Surf
Survey	Sur
Swell	Sw
Symmetrical	Sym
T	
Tangent	Tan
Tangent Length	T
Tangent to Spiral	TS
Telegraph	Tlg

WORDS	ABBREVIATION
T (cont)	
Telephone	Tel
Temporary	Temp
Temporary Construction Easement	TCE
Timber	Tbr
Top of Curb	TC
Topography	Topo
Township	T
Traffic Interchange	TI
Transition	Trns
Turning Point	TP
Turnout	TO
Typical	Typ
U	
Underground	Ugnd
Underpass	UP
V	
Variable	Var
Vertical	Vert
Vertical Curve	VC
Vertical Elliptical Reinforced Concrete Pipe	VERCP
Vertical Point of Intersection	VPI
Viaduct	Via
Vitrified Clay Pipe	VCP
Volume	Vol
W	
Water	W
Water Meter	WM
Water Valve	WV
Welded Wire Fabric	WWF
West	W
Westbound	WB
Western Wood Products Association	WWPA
Wide or Width	W
Wood	Wd
Y	
Yard	Yd

APPROVED FOR DESIGN Mary Vipaina	STATE OF ARIZONA DEPARTMENT OF TRANSPORTATION ROADWAY STANDARD DRAWINGS	REV. 9/04
APPROVED FOR DISTRIBUTION Julie Everett	GENERAL ABBREVIATIONS	DRAWING NO. 1 C-01.30 Sheet 3 of 3

NO	DESCRIPTION OF REVISIONS	MADE BY	DATE
1	ADDED SLOPE ROUNDING DETAIL	PNB	1/93
2	MODIFIED SHOULDER WEDGE DETAIL	TC	1/93
3	MODIFIED TITLE	RLF	9/04
4			

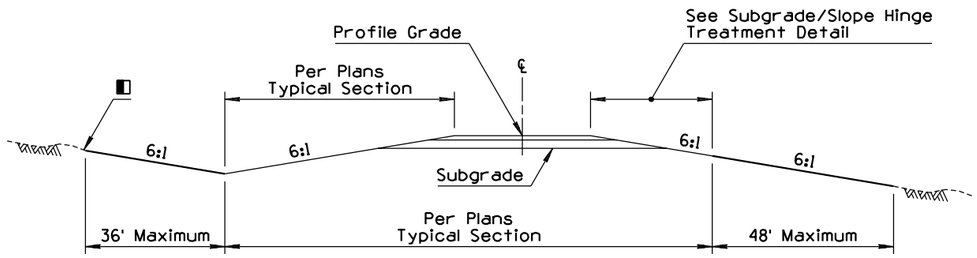

MINIMUM SLOPES

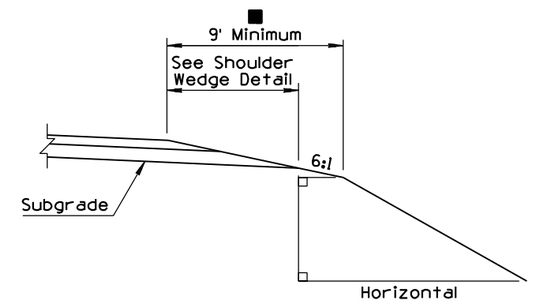

SUBGRADE/SLOPE HINGE TREATMENT DETAIL

GENERAL NOTES

1. Roadway width, cut ditch width, cross slope, and pavement structure section will be shown on project plans.
2. Pavement structure slope is nominal. Actual slope is controlled by (D). See Shoulder Wedge Detail.
3. Slopes beyond the pavement structure, such as embankment and cut slopes, are relative to horizontal.
4. For slope controls within interchange areas, see project plans.
5. When median slopes intersect, see project plans for controls.
6. These slopes are intended to be used with new or reconstructed roadways.

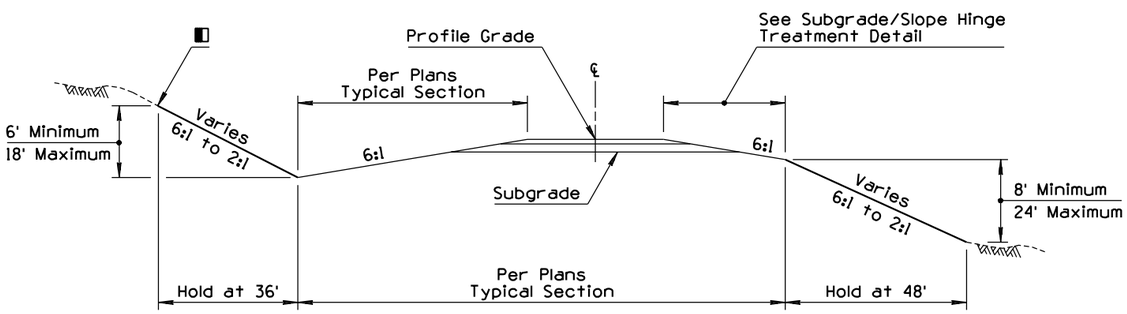

INTERMEDIATE SLOPES

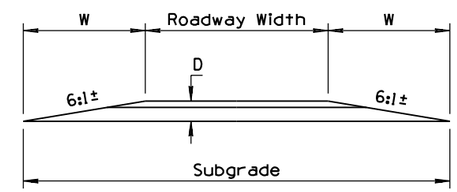

W = D x Slope (6:1)
D = Str Sct Depth (Ft) Excluding ACFC
Subgrade = 2 x W + Roadway Width

② SHOULDER WEDGE DETAIL

■ NOTE TO DESIGNERS

The 9' minimum is required when guardrail is utilized on the project. Treatment shall be uniform throughout the project length. The 9' requirement may be waived under special conditions where guardrail is not utilized.

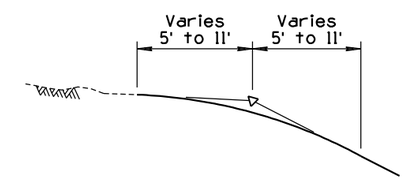

① ◧ SLOPE ROUNDING DETAIL

Except in solid rock, or as directed by the Engineer, the intersection of roadway cut slopes with the ground surfaces shall be rounded.

For cuts up to 6', use 5' semi-tangents for slope rounding. For each additional foot of cut add 1' to semi-tangent to 11' maximum.

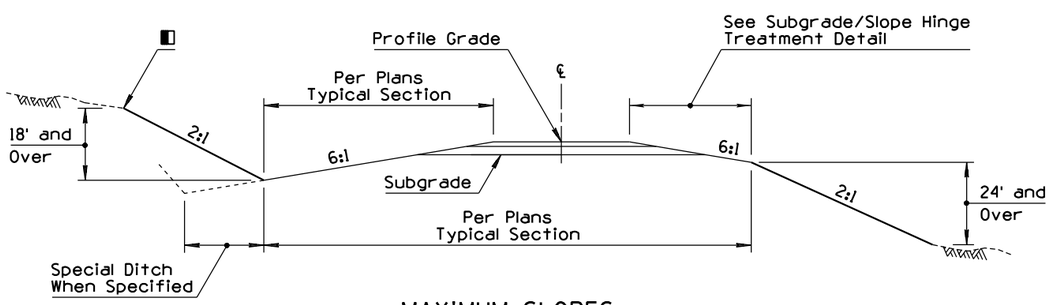

MAXIMUM SLOPES

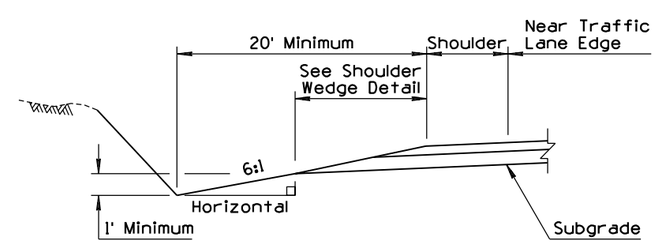

MINIMUM DITCH CONDITIONS DETAIL

APPROVED FOR DESIGN	STATE OF ARIZONA DEPARTMENT OF TRANSPORTATION ROADWAY STANDARD DRAWINGS	REV.
Mary Vipaina		1/93
APPROVED FOR DISTRIBUTION	SLOPES DIVIDED HIGHWAYS ③	DRAWING NO.
		C-02.10

NO	DESCRIPTION OF REVISIONS	MADE BY	DATE
1	ADDED SLOPE ROUNDING DETAIL	PNB	1/93
2	CORRECTED FILL HEIGHT CALLOUT	TC	1/93
3	MODIFIED SHOULDER WEDGE DETAIL	TC	1/93
4			

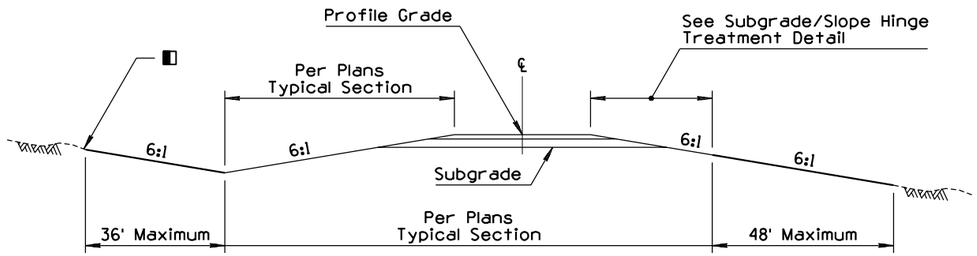

MINIMUM SLOPES

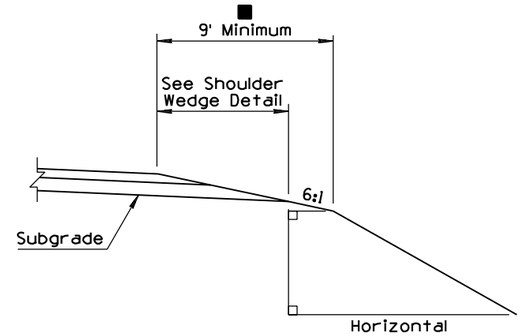

SUBGRADE/SLOPE HINGE TREATMENT DETAIL

GENERAL NOTES

1. Roadway width, cut ditch width, cross slope, and pavement structure section will be shown on project plans.
2. Pavement structure slope is nominal. Actual slope is controlled by (D). See Shoulder Wedge Detail.
3. Slopes beyond the pavement structure, such as embankment and cut slopes, are relative to horizontal.
4. When median slopes intersect, see project plans for controls.
5. These slopes are intended to be used with new or reconstructed roadways.

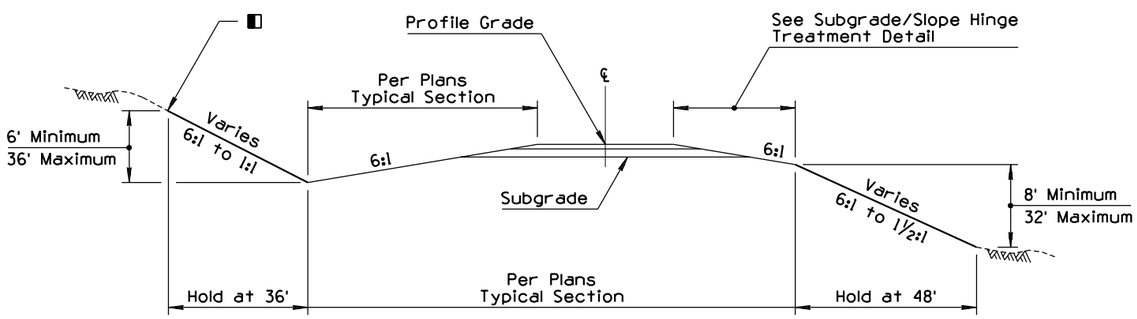

INTERMEDIATE SLOPES

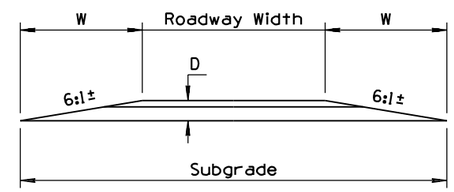

W = D x Slope (6:1)
D = Str Sct Depth (Ft) Excluding ACFC
Subgrade = 2 x W + Roadway Width

③ SHOULDER WEDGE DETAIL

■ NOTE TO DESIGNERS

The 9' minimum is required when guardrail is utilized on the project. Treatment shall be uniform throughout the project length. The 9' requirement may be waived under special conditions where guardrail is not utilized.

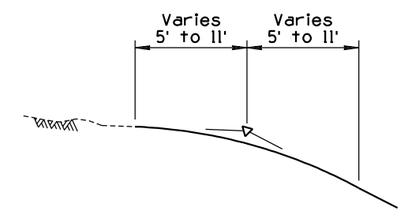

① ◧ SLOPE ROUNDING DETAIL

Except in solid rock, or as directed by the Engineer, the intersection of roadway cut slopes with the ground surfaces shall be rounded.

For cuts up to 6', use 5' semi-tangents for slope rounding. For each additional foot of cut add 1' to semi-tangent to 11' maximum.

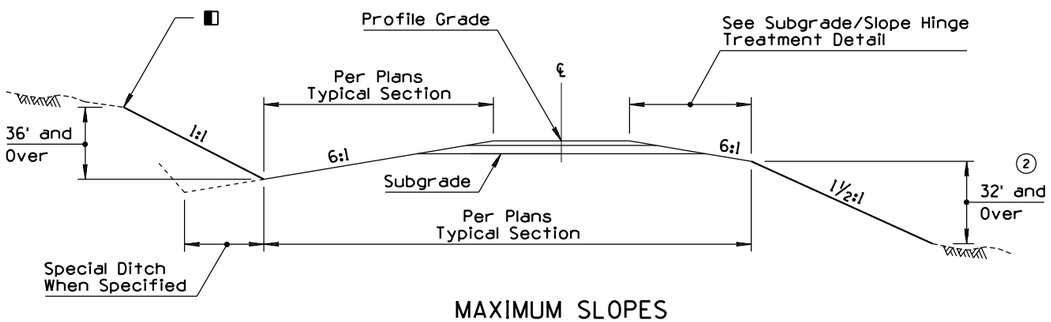

MAXIMUM SLOPES

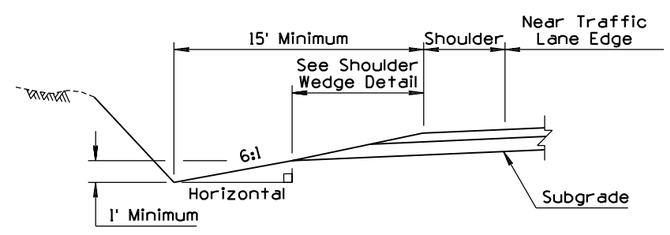

MINIMUM DITCH CONDITIONS DETAIL

APPROVED FOR DESIGN	STATE OF ARIZONA DEPARTMENT OF TRANSPORTATION ROADWAY STANDARD DRAWINGS	REV.
Mary Vipanna		1/93
APPROVED FOR DISTRIBUTION	SLOPES PRIMARY ROADWAYS	DRAWING NO.
		C-02.20

NO	DESCRIPTION OF REVISIONS	MADE BY	DATE
1	REVISED 9' DIMENSION TO 6'	PNB	10/95
2	DELETED GENERAL NOTE 4	RLF	9/04
3			
4			

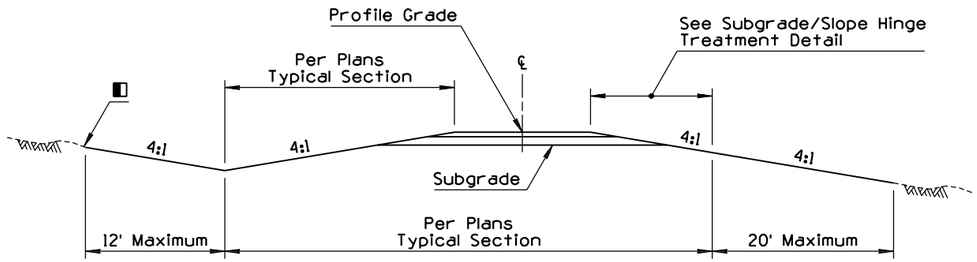

MINIMUM SLOPES

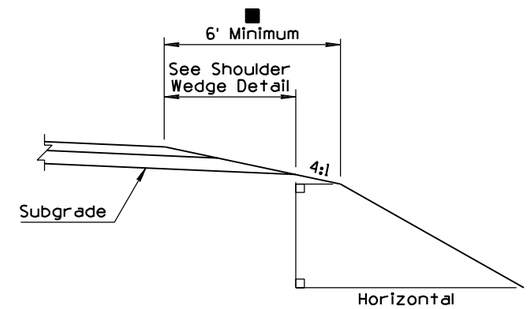

SUBGRADE/SLOPE HINGE TREATMENT DETAIL

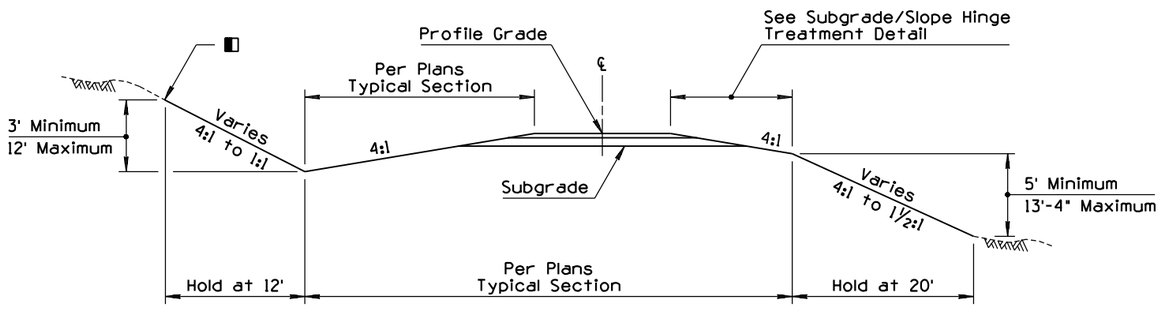

INTERMEDIATE SLOPES

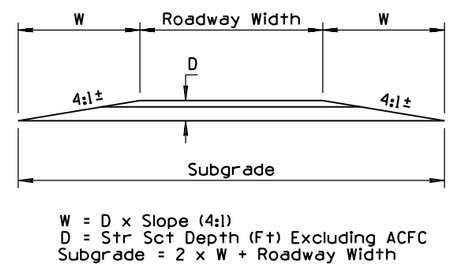

W = D x Slope (4:1)
D = Str Sct Depth (Ft) Excluding ACFC
Subgrade = 2 x W + Roadway Width

SHOULDER WEDGE DETAIL

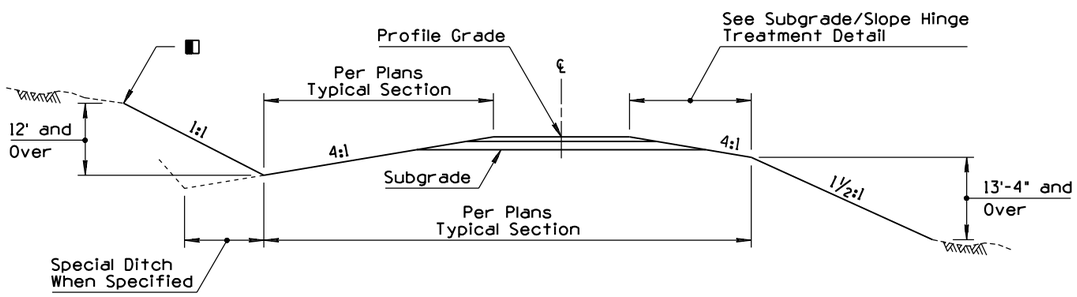

MAXIMUM SLOPES

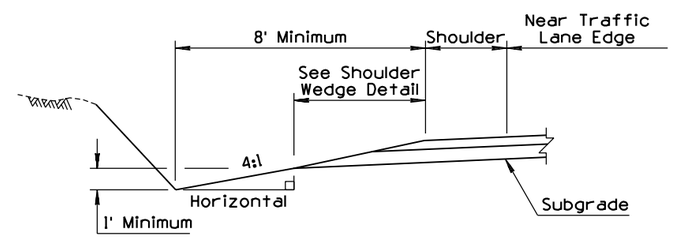

MINIMUM DITCH CONDITIONS DETAIL

GENERAL NOTES

1. Roadway width, cut ditch width, cross slope, and pavement structure section will be shown on project plans.
2. Pavement structure slope is nominal. Actual slope is controlled by (D). See Shoulder Wedge Detail.
3. Slopes beyond the pavement structure, such as embankment and cut slopes, are relative to horizontal.

(2)

(1) ■ NOTE TO DESIGNERS

The 6' minimum is required when guardrail is utilized on the project. Treatment shall be uniform throughout the project length. The 6' requirement may be waived under special conditions where guardrail is not utilized.

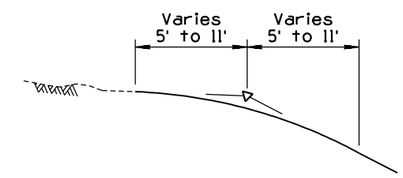

◧ SLOPE ROUNDING DETAIL

Except in solid rock, or as directed by the Engineer, the intersection of roadway cut slopes with the ground surfaces shall be rounded.

For cuts up to 6', use 5' semi-tangents for slope rounding. For each additional foot of cut add 1' to semi-tangent to 11' maximum.

APPROVED FOR DESIGN	STATE OF ARIZONA DEPARTMENT OF TRANSPORTATION ROADWAY STANDARD DRAWINGS	REV. 9/04
APPROVED FOR DISTRIBUTION	SLOPES SECONDARY/MISC ROADWAYS	DRAWING NO. C-02.30

NO	DESCRIPTION OF REVISIONS	MADE BY	DATE
1	REVISED SLOPE DESIGNATIONS	RLF	9/04
2	REVISED EXISTING GROUND-LINE SYMBOLOGY	RLF	9/04
3			
4			

GENERAL NOTES

1. Dimensions of ditches and channels shall be shown on the plans as bottom width, depth and length.
2. Ditches and channels shall be constructed with a minimum grade to prevent erosion. Ditch outlet treatment shall be as provided on plans.

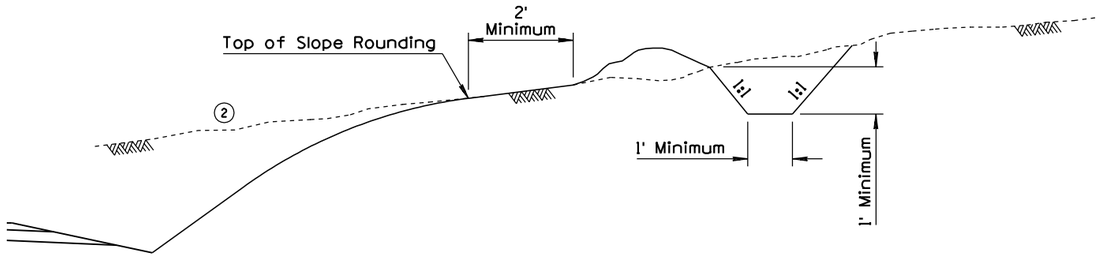

CROWN DITCH

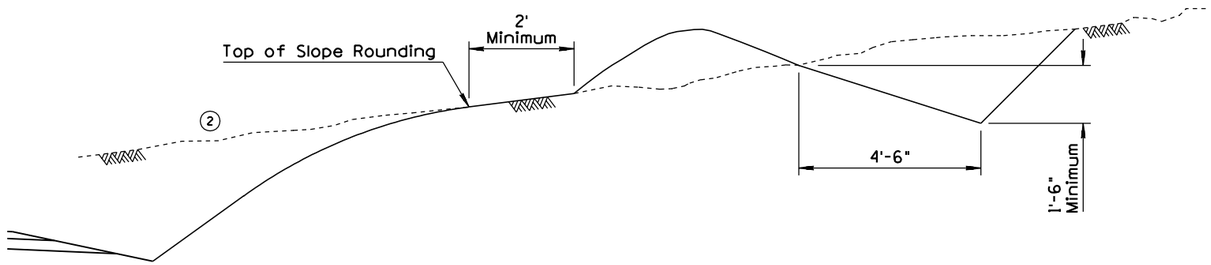

GRADER DITCH

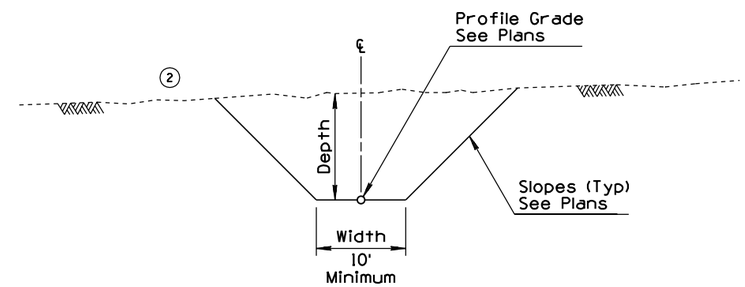

1

CHANNEL

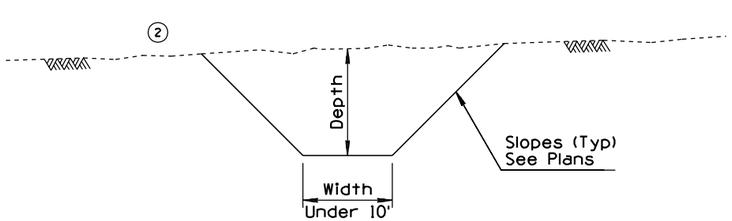

1

DITCH

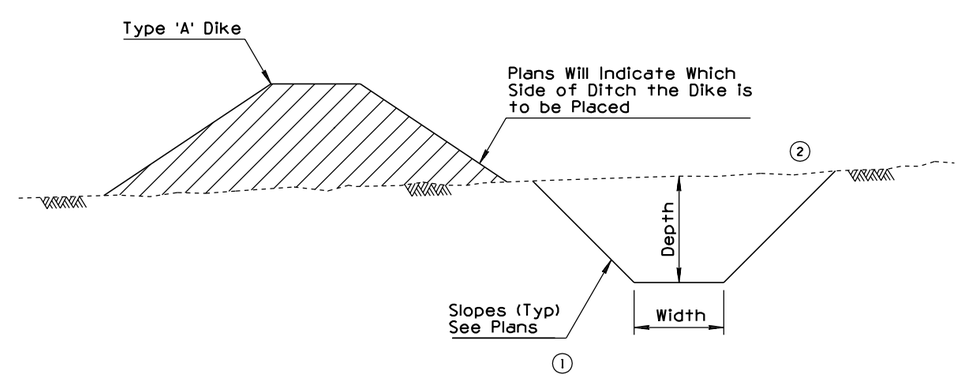

1

DITCH AND DIKE

APPROVED FOR DESIGN	STATE OF ARIZONA DEPARTMENT OF TRANSPORTATION ROADWAY STANDARD DRAWINGS	REV.
Mary Viparina		9/04
APPROVED FOR DISTRIBUTION	DITCHES, CHANNELS, DIKES AND BERMS DITCHES AND CHANNELS	DRAWING NO. C-03.10 Sheet 1 of 5

NO	DESCRIPTION OF REVISIONS	MADE BY	DATE
1	DELETED SLOPE TABLE	RLF	9/04
2	DELETED GENERAL NOTE 2: REVISED SLOPE DESIGNATIONS	RLF	9/04
3			
4			

GENERAL NOTES

1. Dimensions of dikes shall be shown on the plans as top width, height, length and top of dike elevation.

2 ◑ Slope as Shown on Plans (10:1 Desirable)

■ Slope as Shown on Plans

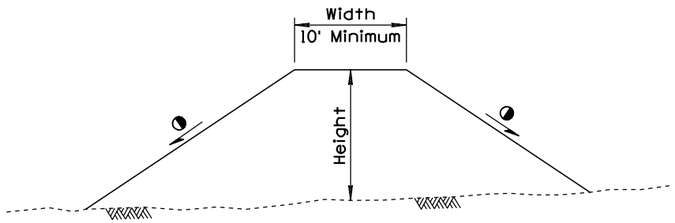

TYPE A DIKE

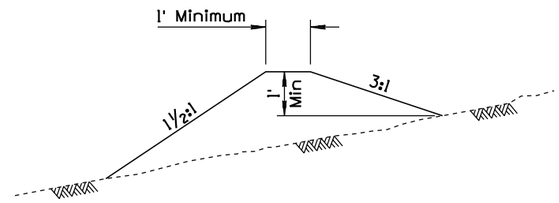

CROWN DIKE

1

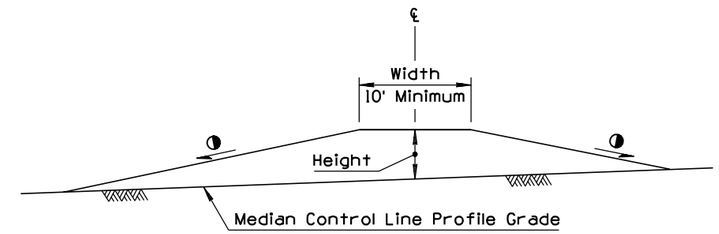

TYPE B TRANSVERSE MEDIAN DIKE

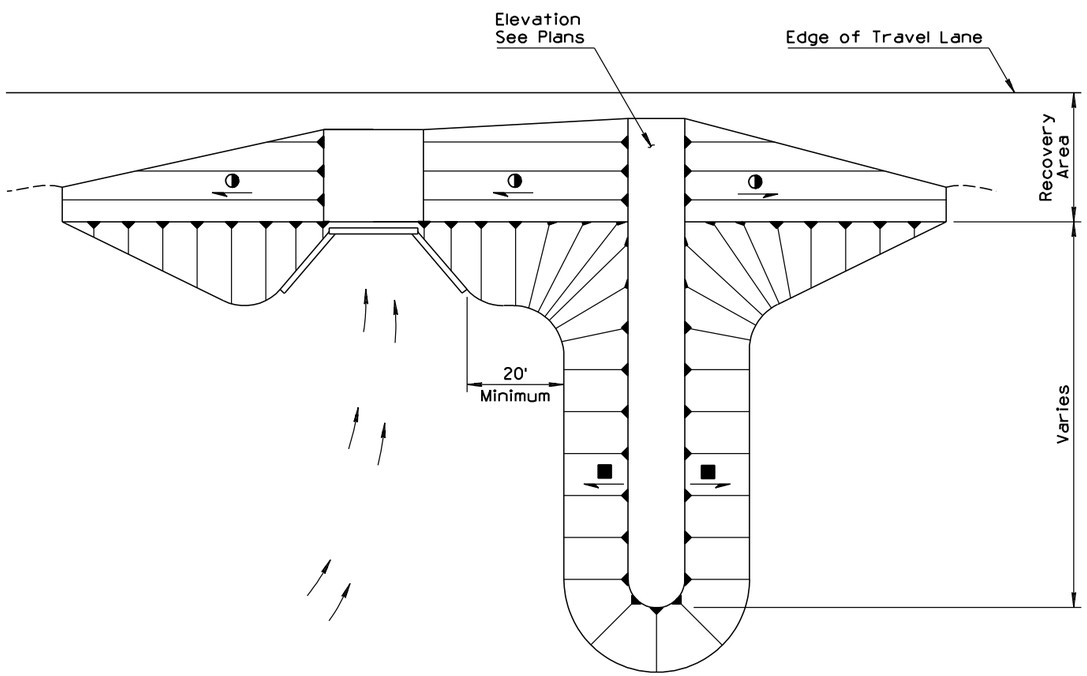

TYPICAL DIKE INSTALLATION AT STRUCTURE

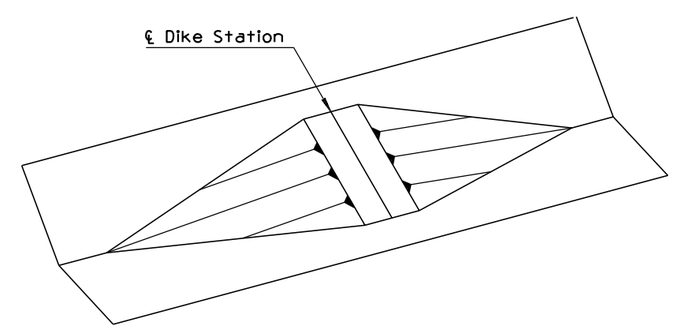

TYPICAL TRANSVERSE MEDIAN DIKE INSTALLATION

APPROVED FOR DESIGN	STATE OF ARIZONA DEPARTMENT OF TRANSPORTATION ROADWAY STANDARD DRAWINGS	REV.
		9/04
APPROVED FOR DISTRIBUTION	DITCHES, CHANNELS, DIKES AND BERMS DIKES	DRAWING NO. C-03.10 Sheet 2 of 5

NO	DESCRIPTION OF REVISIONS	MADE BY	DATE
1	ADDED NEW GENERAL NOTE	RLF	9/04
2	REVISED SLOPE DESIGNATIONS	RLF	9/04
3			
4			

GENERAL NOTES

1. Dimensions for ditch dikes shall be shown on the plans as dike stationing, height, length, dike back slope and top of dike elevation.
2. Dimensions for cut ditch widening shall be shown on the plans as beginning and ending stations.
3. (1) All slopes are given relative to the grade of the cut ditch at the toe intersection.

(2) ● ← 10:1 Desirable Slope

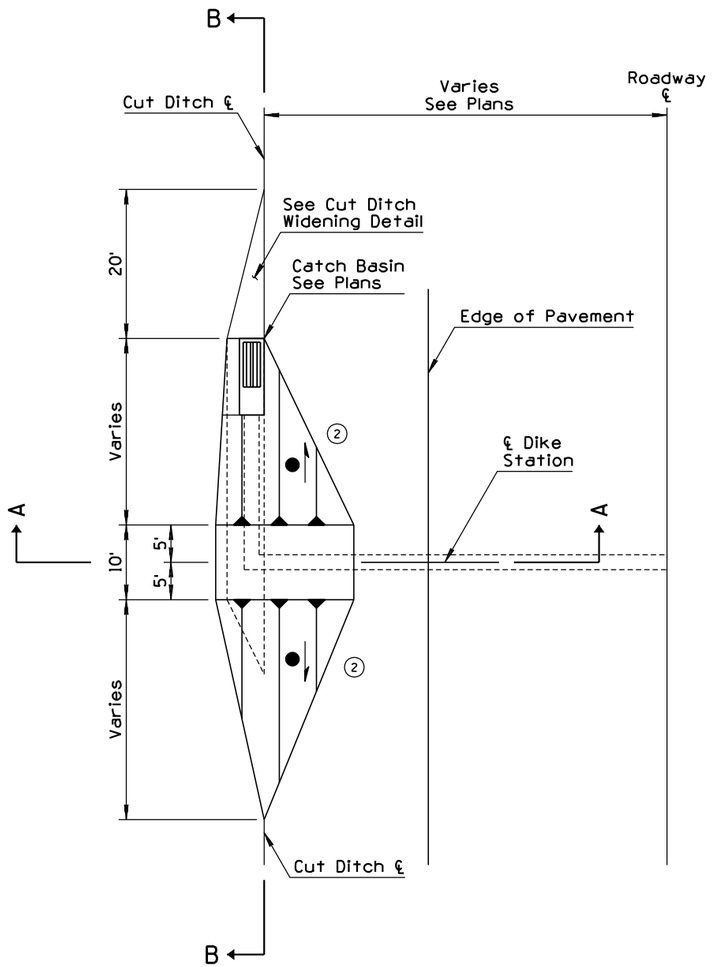

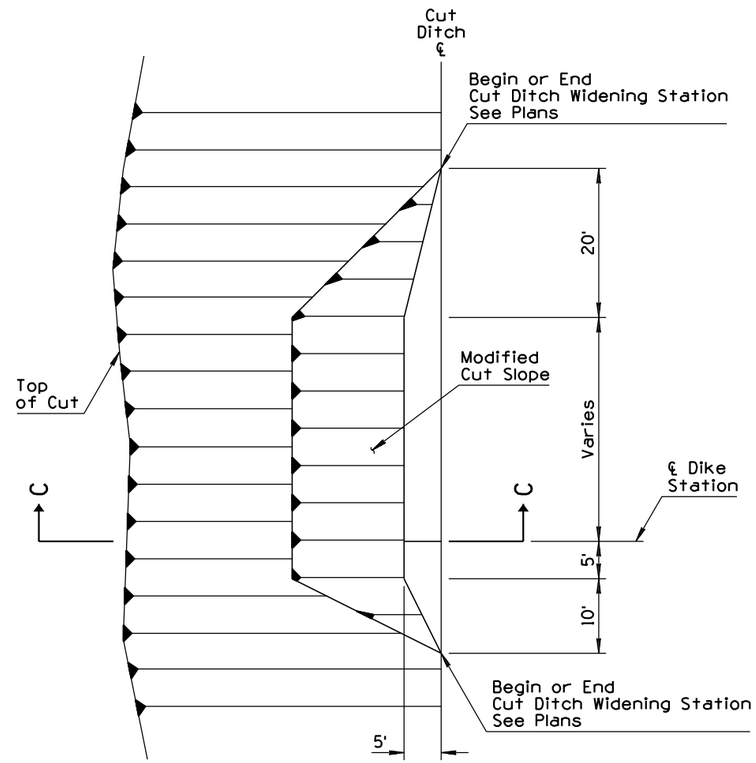

CUT DITCH WIDENING DETAIL

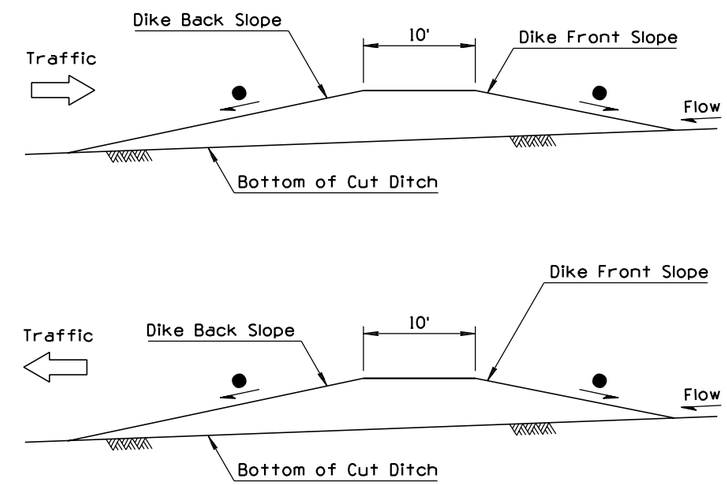

(2)

SECTION B-B

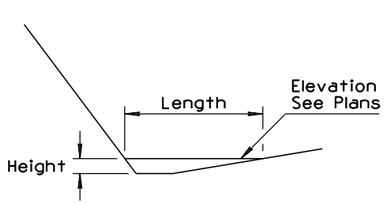

SECTION A-A

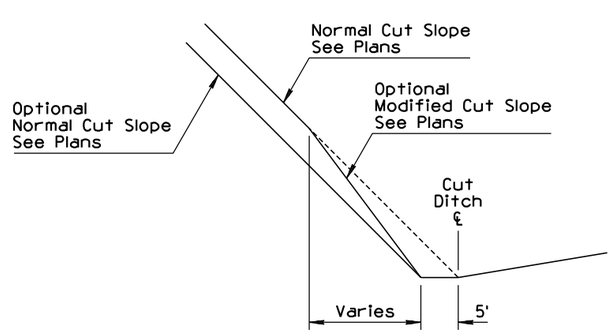

SECTION C-C

APPROVED FOR DESIGN	STATE OF ARIZONA DEPARTMENT OF TRANSPORTATION ROADWAY STANDARD DRAWINGS	REV.
		9/04
APPROVED FOR DISTRIBUTION	DITCHES, CHANNELS, DIKES AND BERMS DITCH DIKE	DRAWING NO. C-03.10 Sheet 3 of 5

NO	DESCRIPTION OF REVISIONS	MADE BY	DATE
1			
2			
3			
4			

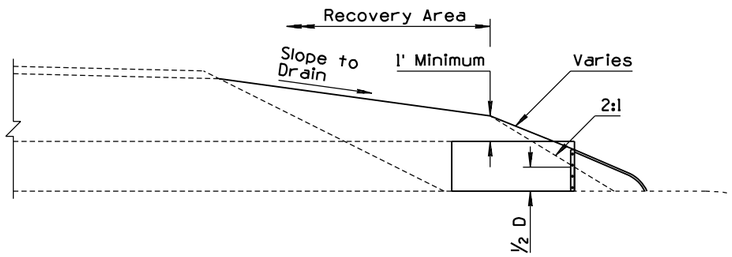

SECTION A-A (WITH END SECTION)

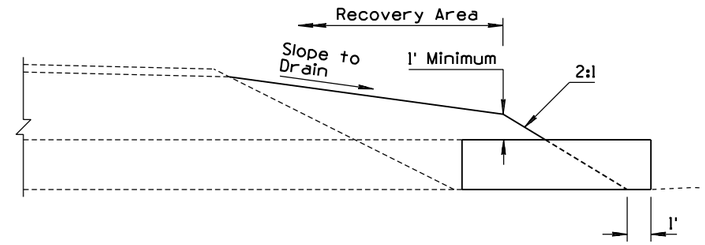

SECTION A-A (WITHOUT END SECTION)

GENERAL NOTES

1. Pipe berms not required when pipe projection is protected by guardrail.
2. Berm construction similar for multiple pipe installation and for pipes without end sections.
3. Berm construction shown is for pipe extensions. Berm construction similar for new pipe installation. See Pipe Berm Requirement Detail. If Point A is within the recovery area, then a pipe berm is required and Point B is set at the edge of the recovery area.

NOTE:
Single Pipe Installation: D = Outside Diameter of Pipe

Multiple Pipe Installation: D = Outside Edge to Outside Edge of Pipes

For Pipe Backfill and Bedding Material Limits See Std Dwg C-13.15

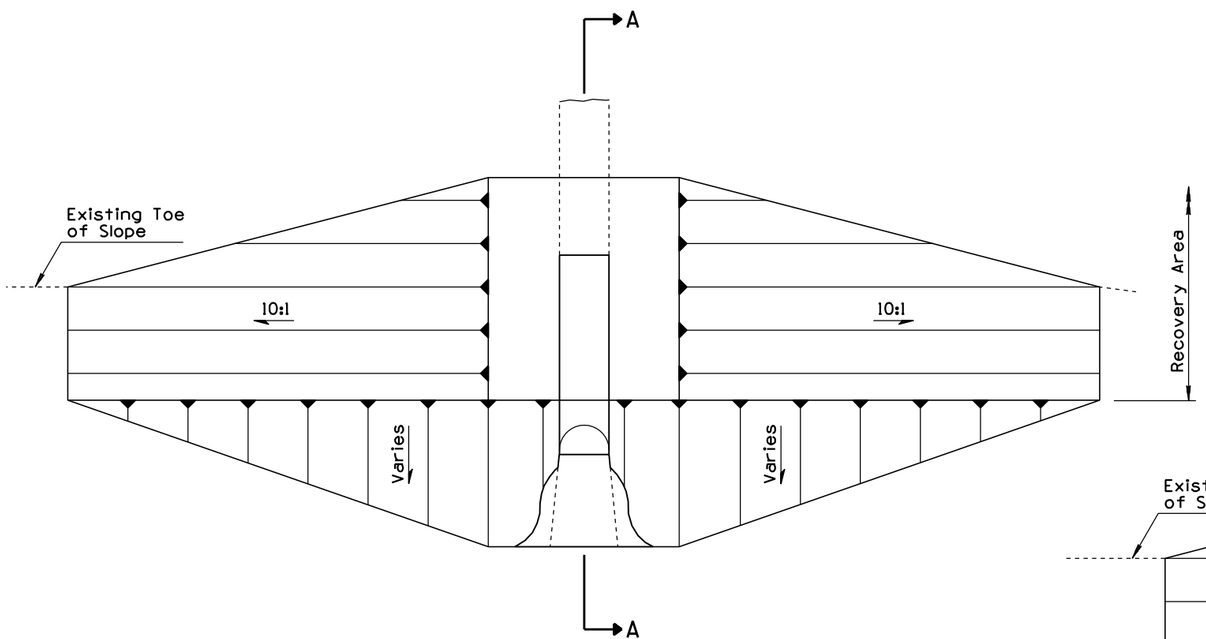

STRAIGHT PIPE PLAN

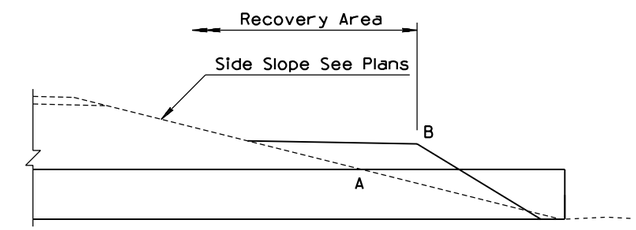

PIPE BERM REQUIREMENT DETAIL

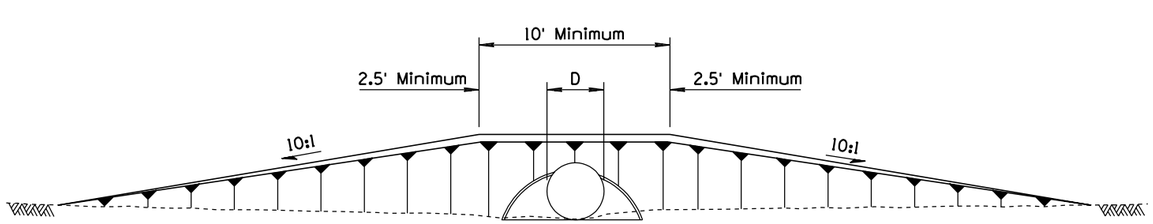

ELEVATION

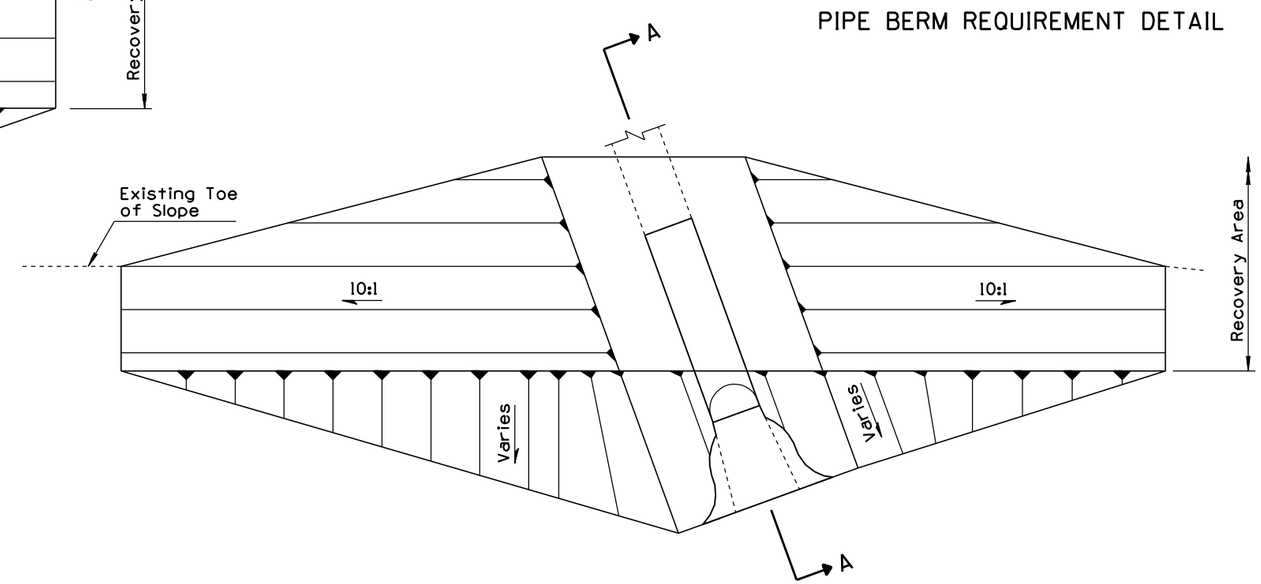

SKEWED PIPE PLAN

APPROVED FOR DESIGN	STATE OF ARIZONA DEPARTMENT OF TRANSPORTATION ROADWAY STANDARD DRAWINGS	REV.
Mary Vipaina		3/94
APPROVED FOR DISTRIBUTION	DITCHES, CHANNELS, DIKES AND BERMS PIPE BERMS	DRAWING NO.
Julie Everett		C-03.10 Sheet 4 of 5

NO	DESCRIPTION OF REVISIONS	MADE BY	DATE
1	REISSUED STANDARD DRAWING	RLF	9/04
2			
3			
4			

GENERAL NOTES

1. Berm construction similar for box culvert and pipe with headwall.
2. Berm construction shown is for extension of existing facilities. Berm construction similar for new facilities.
3. See C-Standards and B-Standards for pipe and structure backfill limits.

◑ Vary slope. Slope shall match to top of wing walls.

● Slope shall match wing walls design slope (2:1, 4:1, or 6:1)

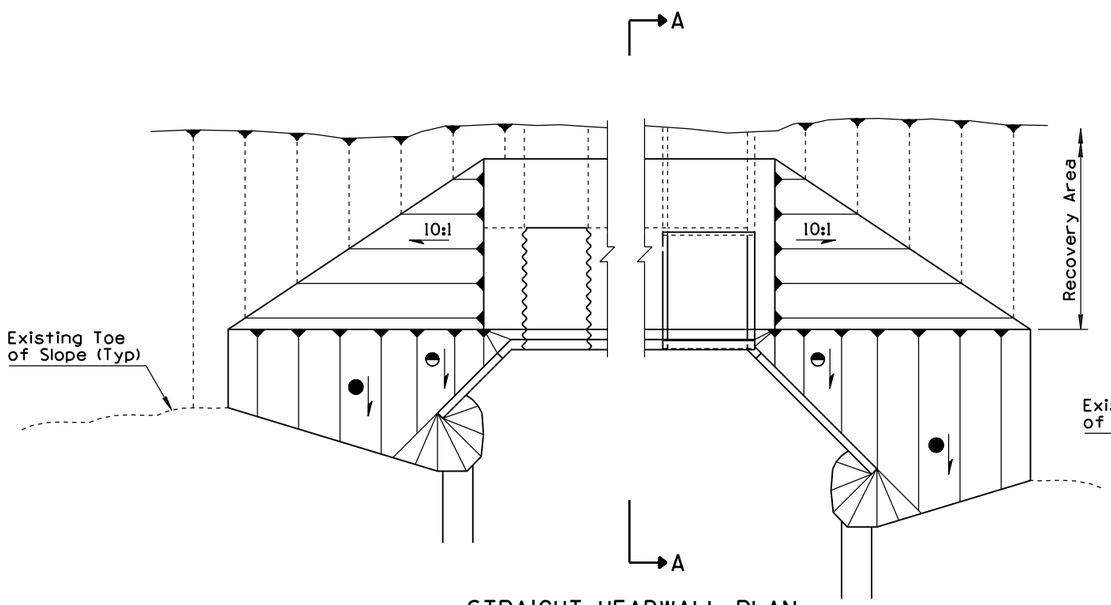

STRAIGHT HEADWALL PLAN
CBC OR PIPE WITH HEADWALL

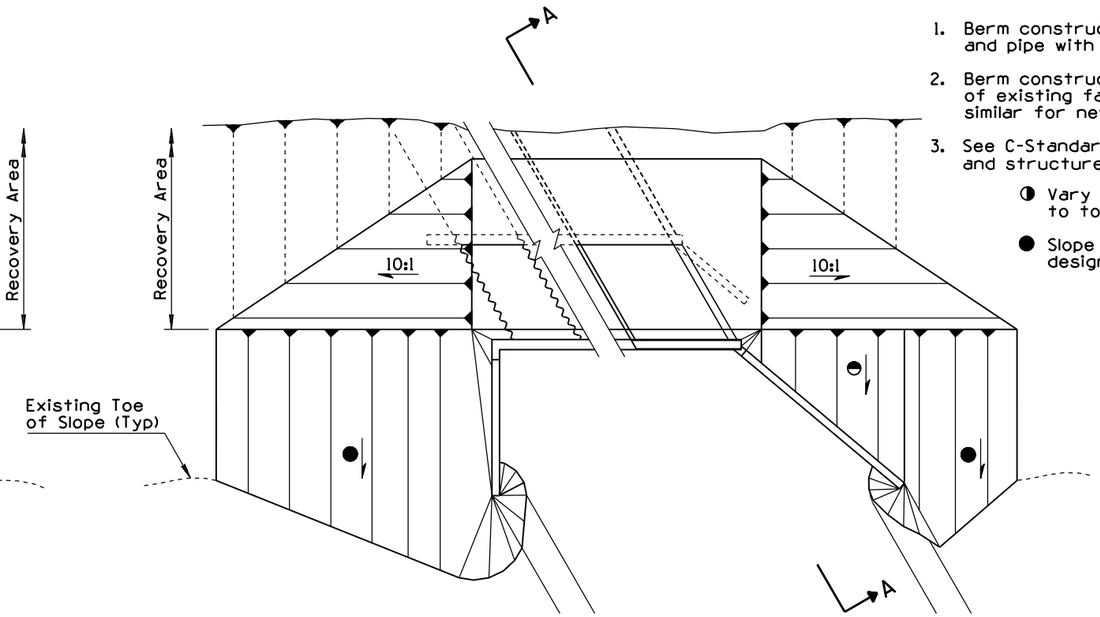

SKEWED HEADWALL PLAN

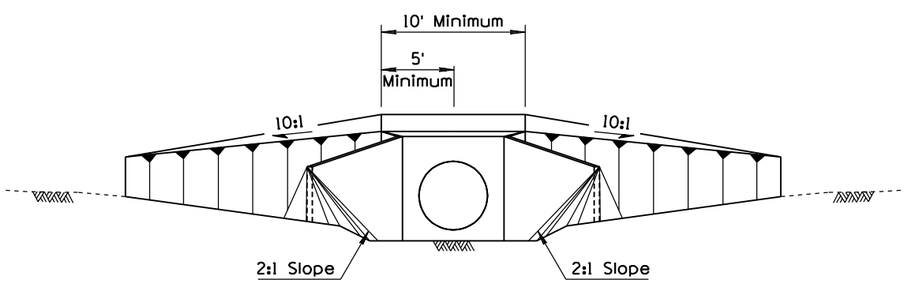

ELEVATION FOR PIPE

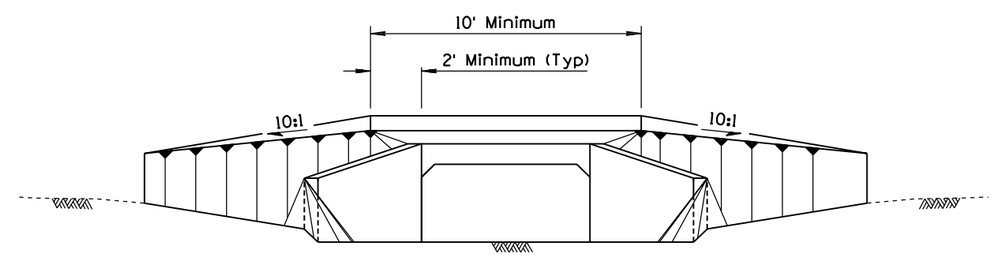

ELEVATION FOR CBC

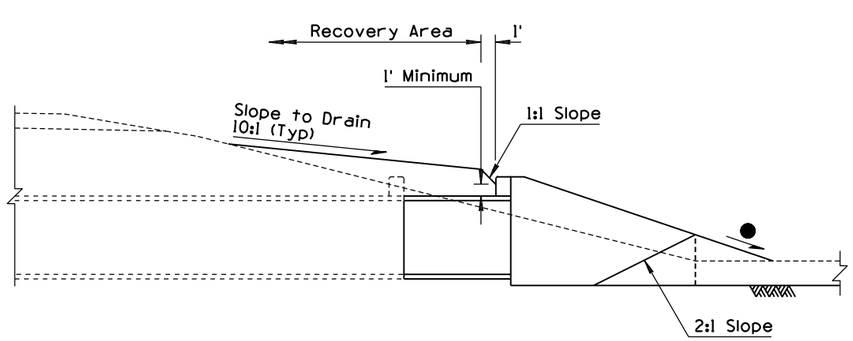

SECTION A-A (FOR PIPE WITH HEADWALL)

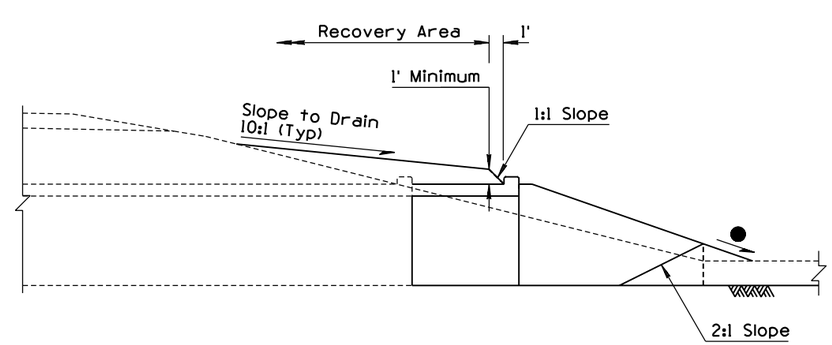

SECTION A-A (FOR CBC)

APPROVED FOR DESIGN	STATE OF ARIZONA DEPARTMENT OF TRANSPORTATION ROADWAY STANDARD DRAWINGS	REV.
		9/04
APPROVED FOR DISTRIBUTION	DITCHES, CHANNELS, DIKES AND BERMS HEADWALL BERMS	DRAWING NO. 1 C-03.10 Sheet 5 of 5

NO	DESCRIPTION OF REVISIONS	MADE BY	DATE
1	REMOVED POST GRAPHICS WITHIN SPILLWAY INLET	RLF	9/04
2	REARRANGED OUTLET GRAPHICS AND SPILLWAY SECTION	RLF	9/04
3	ADDED NEW GENERAL NOTES	RLF	9/04
4			

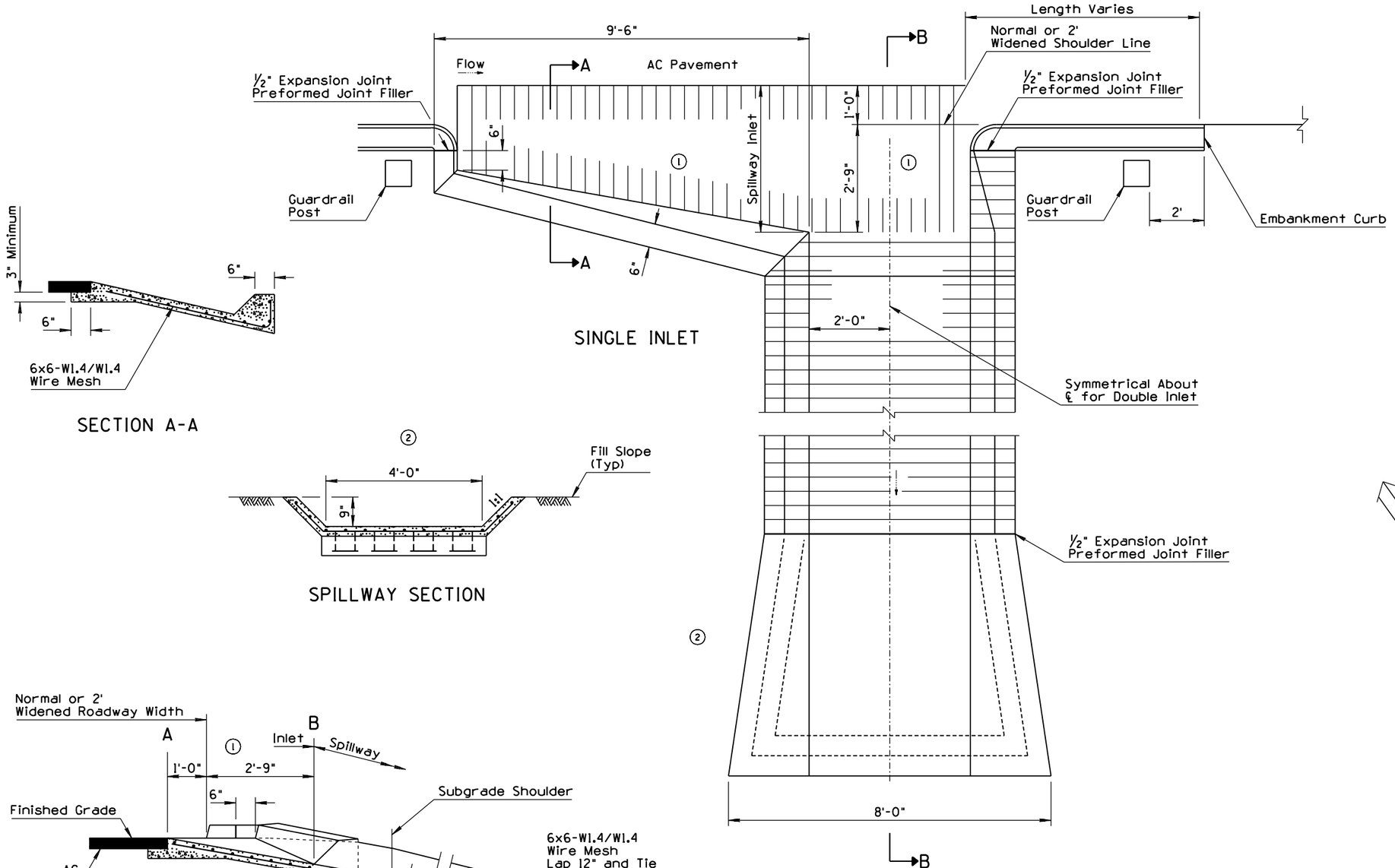

SINGLE INLET

SECTION A-A

SPILLWAY SECTION

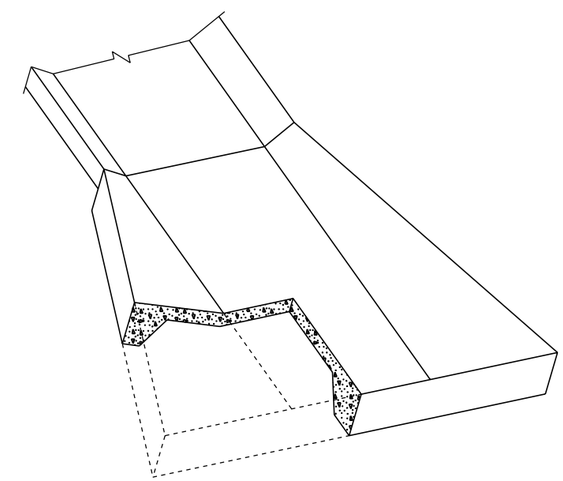

OUTLET DETAIL

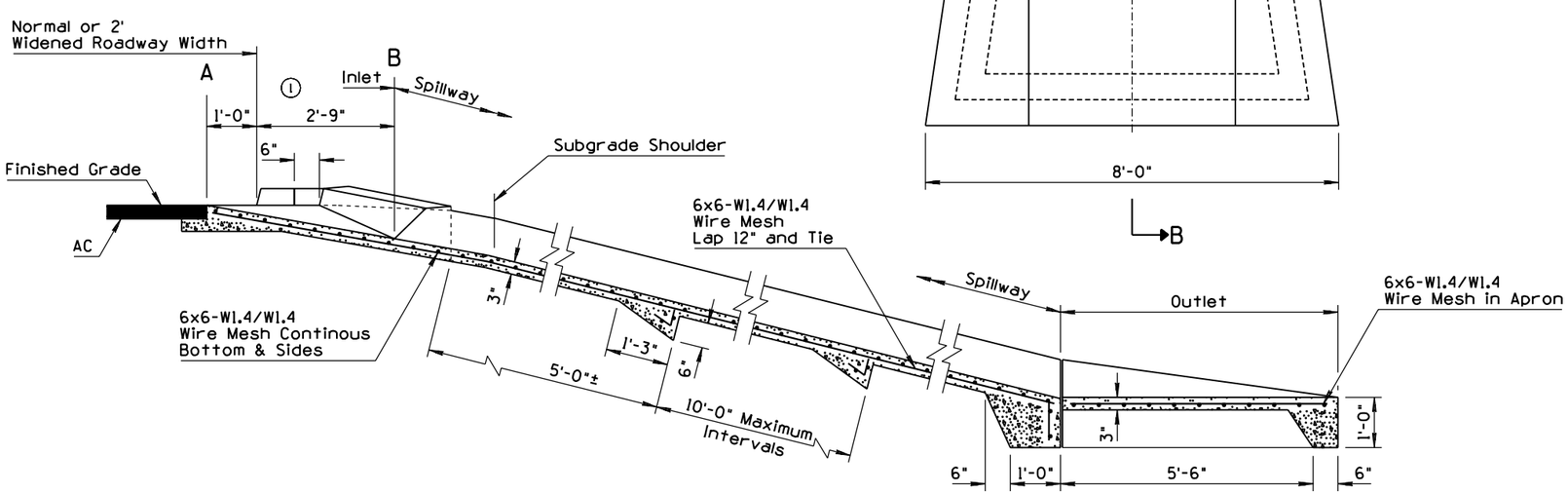

SECTION B-B

GENERAL NOTES

1. All concrete shall be Class B. Embankment curb concrete shall be in accordance with the Std Specs.
2. Where rock is encountered, the outlet may be omitted.
3. When outlet is used, the wire mesh shall extend through the joint into the outlet in lieu of bending into the key.
4. Spillway invert slope shall be uniformly downward from A to B.
5. (3) See Std Dwg C-04.30 for spillway length.
6. (3) See Std Dwg C-10.06 for nested guardrail requirements.

Indicates Inlet

Indicates Spillway

APPROVED FOR DESIGN	STATE OF ARIZONA DEPARTMENT OF TRANSPORTATION ROADWAY STANDARD DRAWINGS	REV.
		9/04
APPROVED FOR DISTRIBUTION	SPILLWAY, EMBANKMENT	DRAWING NO. C-04.10

NO	DESCRIPTION OF REVISIONS	MADE BY	DATE
1	REMOVED POST GRAPHICS WITHIN SPILLWAY INLET	RLF	9/04
2	ADDED NEW GENERAL NOTES	RLF	9/04
3			
4			

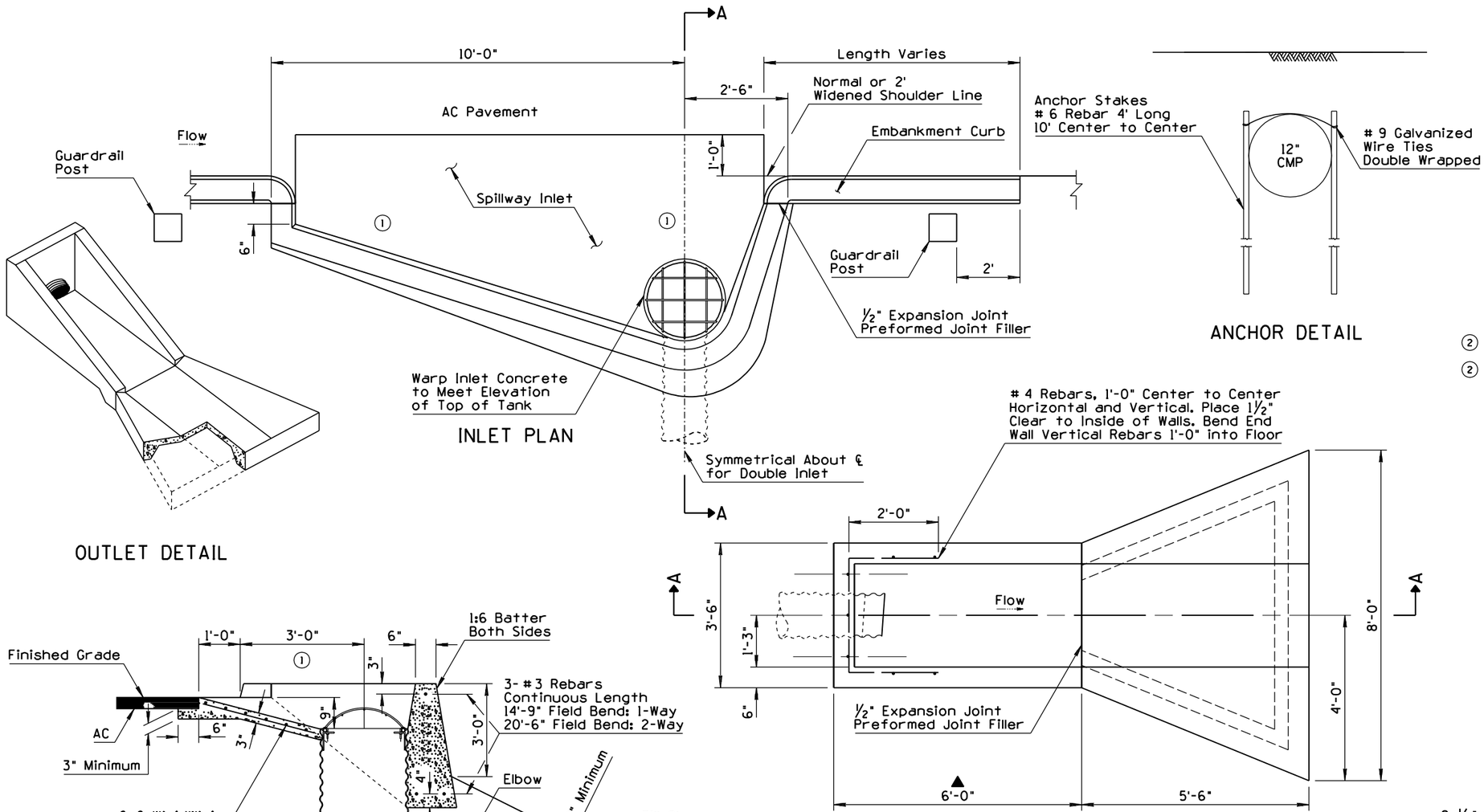

OUTLET DETAIL

ANCHOR DETAIL

OUTLET HEADWALL AND CONCRETE APRON

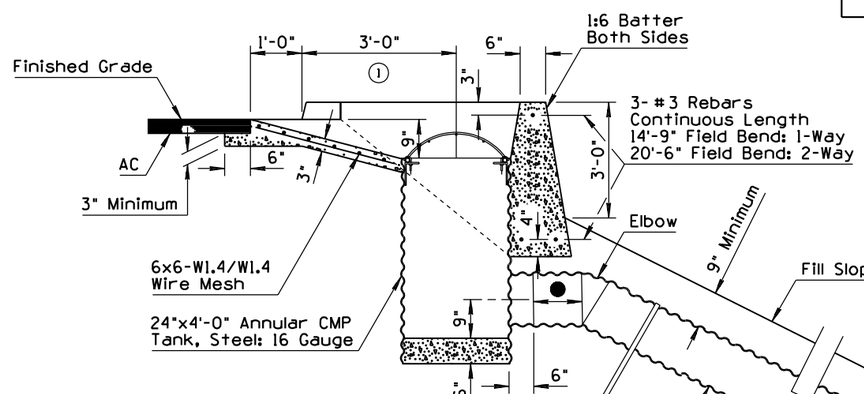

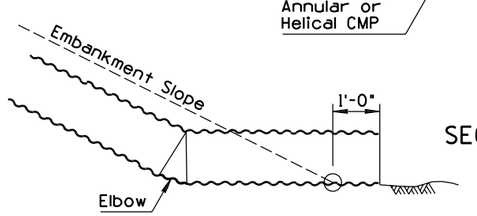

CMP OUTLET ON ROCK

● Varies with subgrade slope and pavement structural thickness

▲ Varies with fill slope and pipe cover

SECTION A-A

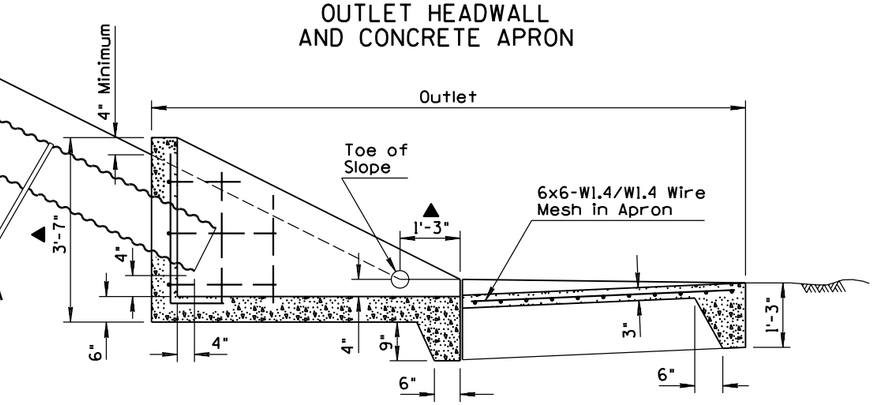

GENERAL NOTES

1. Round all exposed concrete corners.
2. Tank, stub, trash rack and angle supports shall be shop fabricated, welded and galvanized in accordance with AASHTO M36.
3. Stub shall be of annular corrugation. Downdrain piping beyond stub may be either annular or helical corrugation.
4. Permissible couplings shall be mechanical, heat-shrinkable polyolatin sheet: one piece lap type neoprene sheet or slip seam; all minimum 12" width and minimum 18 gauge.
5. Inlet invert slope shall be uniformly downward from 1' inside of embankment curb base.
6. All concrete shall be Class B. Embankment curb concrete shall be in accordance with the Std Specs.
7. (2) See Std Dwg C-04.40 for downdrain length.
8. (2) See Std Dwg C-10.06 for nested guardrail requirements.

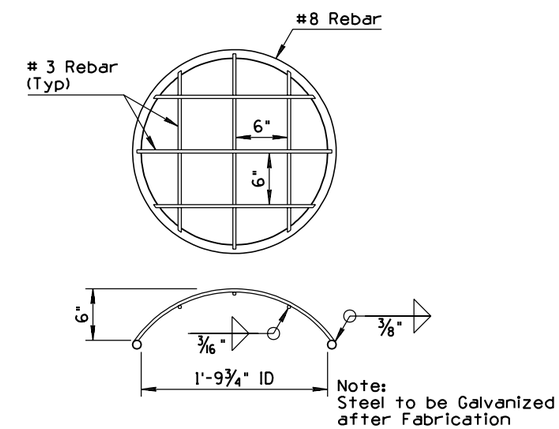

TRASH RACK DETAIL

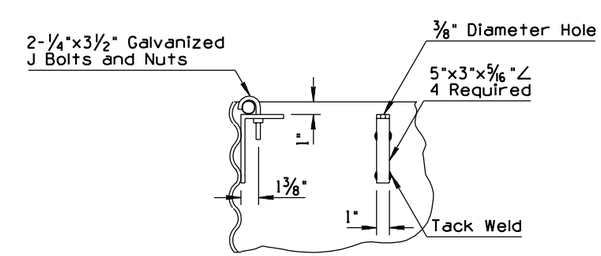

DETAIL
ANGLE SUPPORTS
FOR TRASH RACK

APPROVED FOR DESIGN	STATE OF ARIZONA DEPARTMENT OF TRANSPORTATION ROADWAY STANDARD DRAWINGS	REV.
		9/04
APPROVED FOR DISTRIBUTION	DOWNDRAIN, EMBANKMENT	DRAWING NO. C-04.20

NO	DESCRIPTION OF REVISIONS	MADE BY	DATE
1	MODIFIED TABLE MEASUREMENT FORMAT	RLF	9/04
2			
3			
4			

①

LENGTH OF SPILLWAY (Ft)

Thickness (In) ◑	Embankment Height (Ft)																											
	5	6	7	8	9	10	11	12	13	14	15	16	17	18	19	20	21	22	23	24	25	26	27	28	29	30	31	32
12	32	37	43	49	50	50	51	52	52	52	52	53	53	54	54	54	55	55	56	56	57	57	58	58	59	59	60	60
13	33	38	44	50	50	51	51	52	52	52	53	53	53	54	54	55	55	56	56	57	57	58	58	59	59	60	60	61
14	33	38	44	50	51	51	52	52	53	53	53	54	54	54	55	55	56	56	57	57	58	58	59	59	60	60	61	61
15	34	39	45	51	51	52	52	53	53	54	54	54	55	55	55	56	56	57	57	58	58	59	59	60	60	61	61	62
16	34	39	45	51	52	52	53	53	54	54	54	55	55	56	56	56	57	57	58	58	59	59	60	60	61	61	62	62
17	35	40	46	52	52	53	53	54	54	55	55	55	56	56	57	57	57	58	58	59	59	60	60	61	61	62	62	63
18	35	40	46	52	53	53	54	54	55	55	55	56	56	57	57	57	58	58	59	59	60	60	61	61	62	62	63	63
19	36	41	47	53	53	54	54	55	55	56	56	56	57	57	58	58	58	59	59	60	60	61	61	62	62	63	63	64
20	36	41	47	53	54	54	55	55	56	56	56	57	57	58	58	58	59	59	60	60	61	61	62	62	63	63	64	64
21	37	42	48	54	54	55	55	56	56	57	57	57	58	58	59	59	59	60	60	61	61	62	62	63	63	64	64	65
22	37	42	48	54	55	55	56	56	57	57	57	58	58	59	59	59	60	60	61	61	62	62	63	63	64	64	65	65
23	38	43	49	55	55	56	56	57	57	58	58	58	59	59	60	60	60	61	61	62	62	63	63	64	64	65	65	66
24	38	43	49	55	56	56	57	57	58	58	58	59	59	60	60	60	61	61	62	62	63	63	64	64	65	65	66	66
25	39	44	50	56	56	57	57	58	58	59	59	59	60	60	61	61	61	62	62	63	63	64	64	65	65	66	66	67
26	39	44	50	56	57	57	58	58	59	59	59	60	60	61	61	61	62	62	63	63	64	64	65	65	66	66	67	67
27	40	45	51	57	57	58	58	59	59	60	60	60	61	61	62	62	62	63	63	64	64	65	65	66	66	67	67	68
28	40	45	51	57	58	58	59	59	60	60	60	61	61	62	62	62	63	63	64	64	65	65	66	66	67	67	68	68
29	41	46	52	58	58	59	59	60	60	61	61	61	62	62	63	63	63	64	64	65	65	66	66	67	67	68	68	69
30	41	46	52	58	59	59	60	60	61	61	61	62	62	63	63	63	64	64	65	65	66	66	67	67	68	68	69	69
31	42	47	53	59	59	60	60	61	61	62	62	62	63	63	64	64	64	65	65	66	66	67	67	68	68	69	69	70
32	42	47	53	59	60	60	61	61	62	62	62	63	63	64	64	64	65	65	66	66	67	67	68	68	69	69	70	70
33	43	48	54	60	60	61	61	62	62	63	63	63	64	64	65	65	65	66	66	67	67	68	68	69	69	70	70	71
34	43	48	54	60	61	61	62	62	63	63	63	64	64	65	65	65	66	66	67	67	68	68	69	69	70	70	71	71
35	44	49	55	61	61	62	62	63	63	64	64	64	65	65	66	66	66	67	67	68	68	69	69	70	70	71	71	72
36	44	49	55	61	62	62	63	63	64	64	64	65	65	66	66	66	67	67	68	68	69	69	70	70	71	71	72	72

C-02.10 AND C-02.20 SLOPES

①

LENGTH OF SPILLWAY (Ft)

Thickness (In) ◑	Embankment Height (Ft)								
	5	6	7	8	9	10	11	12	13
12	22	22	22	23	23	24	24	24	25
13	22	22	23	23	23	24	24	25	25
14	22	23	23	23	24	24	25	25	26
15	23	23	23	24	24	25	25	25	26
16	23	23	24	24	24	25	25	26	26
17	23	24	24	24	25	25	26	26	27
18	24	24	25	25	25	26	26	27	27
19	24	24	25	25	25	26	26	27	27
20	25	25	25	25	26	26	27	27	28
21	25	25	25	26	26	27	27	28	28
22	25	25	26	26	27	27	27	28	28
23	26	26	26	26	27	27	28	28	29
24	26	26	26	27	27	28	28	29	29
25	26	27	27	27	28	28	28	29	29
26	27	27	27	28	28	28	29	29	30
27	27	27	28	28	28	29	29	30	30
28	27	28	28	28	29	29	29	30	30
29	28	28	28	29	29	29	30	30	31
30	28	28	29	29	29	30	30	31	31
31	28	29	29	29	30	30	31	31	32
32	29	29	29	30	30	30	31	31	32
33	29	29	30	30	30	31	31	32	32
34	29	30	30	30	31	31	32	32	33
35	30	30	30	31	31	31	32	32	33
36	30	30	31	31	31	32	32	33	33

C-02.30 SLOPES

GENERAL NOTES

1. For C-02.10 slopes with embankment height over 24', use length for 24' embankment height from table + 2'.
2. For C-02.20 slopes with embankment height over 32', use length for 32' embankment height from table + 2'.
3. For C-02.30 slopes with embankment height over 13', use length for 13' embankment height from table + 2'.
4. For spillway details, see Std Dwg C-04.10.

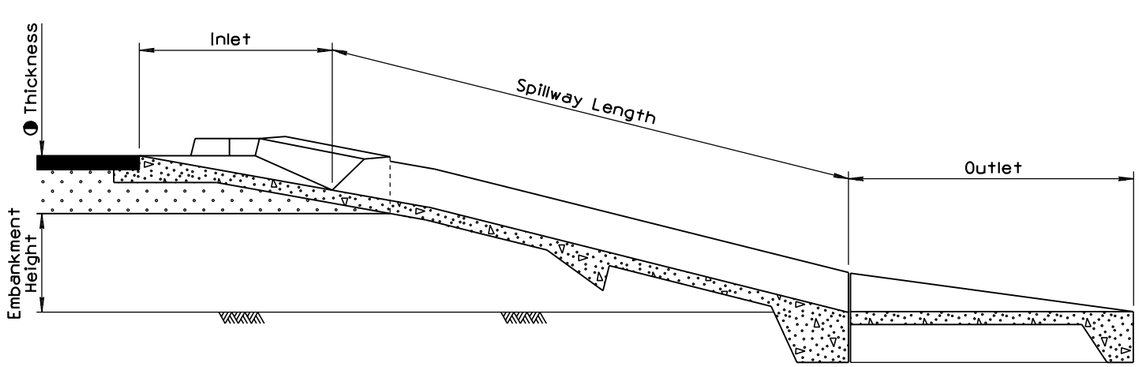

APPROVED FOR DESIGN	STATE OF ARIZONA DEPARTMENT OF TRANSPORTATION ROADWAY STANDARD DRAWINGS	REV.
		9/04
APPROVED FOR DISTRIBUTION	SPILLWAY LENGTH TABLE	DRAWING NO.
		C-04.30

NO	DESCRIPTION OF REVISIONS	MADE BY	DATE
1	MODIFIED TABLE MEASUREMENT FORMAT	RLF	/04
2			
3			
4			

①

LENGTH OF DOWNDRAIN (Ft)

Thickness (In) ◑	Embankment Height (Ft)																									
	7	8	9	10	11	12	13	14	15	16	17	18	19	20	21	22	23	24	25	26	27	28	29	30	31	32
12	32	38	46	46	46	46	48	48	48	50	50	50	50	52	52	52	52	54	54	54	54	56	56	56	56	58
13	32	40	46	46	48	48	48	48	50	50	50	50	52	52	52	52	54	54	54	54	56	56	56	56	58	58
14	34	40	46	46	48	48	50	50	50	50	50	52	52	52	52	54	54	54	54	56	56	56	56	58	58	58
15	34	40	46	46	48	48	50	50	50	50	52	52	52	52	54	54	54	54	56	56	56	56	58	58	58	60
16	34	40	48	48	48	48	50	50	50	52	52	52	52	54	54	54	54	56	56	56	56	58	58	58	60	60
17	34	42	48	48	50	50	50	50	52	52	52	52	54	54	54	54	56	56	56	56	58	58	58	60	60	60
18	36	42	48	48	50	50	52	52	52	52	52	54	54	54	54	56	56	56	56	58	58	58	58	60	60	60
19	36	42	48	48	50	50	52	52	52	52	54	54	54	54	56	56	56	56	58	58	58	58	60	60	60	62
20	36	42	50	50	50	50	52	52	52	54	54	54	54	56	56	56	56	58	58	58	58	60	60	60	62	62
21	36	44	50	50	52	52	52	52	54	54	54	54	56	56	56	56	58	58	58	58	60	60	60	62	62	62
22	38	44	50	50	52	52	54	54	54	54	54	56	56	56	56	58	58	58	58	60	60	60	62	62	62	62
23	38	44	50	50	52	52	54	54	54	54	56	56	56	56	58	58	58	58	60	60	60	60	62	62	62	64
24	38	44	52	52	52	52	54	54	54	56	56	56	56	58	58	58	58	60	60	60	60	62	62	62	64	64
25	38	46	52	52	54	54	54	54	56	56	56	56	58	58	58	58	60	60	60	60	62	62	62	64	64	64
26	40	46	52	52	54	54	56	56	56	56	56	58	58	58	58	60	60	60	60	62	62	62	64	64	64	64
27	40	46	52	52	54	54	56	56	56	56	58	58	58	58	60	60	60	62	62	62	62	64	64	64	64	66
28	40	46	54	54	54	54	56	56	58	58	58	58	60	60	60	60	60	62	62	62	64	64	64	64	66	66
29	40	48	54	54	56	56	56	56	58	58	58	58	60	60	60	60	62	62	62	62	64	64	64	66	66	66
30	42	48	54	54	56	56	58	58	58	58	58	60	60	60	60	62	62	62	62	64	64	64	66	66	66	66
31	42	48	54	54	56	56	58	58	58	60	60	60	60	60	62	62	62	64	64	64	64	66	66	66	66	68
32	42	48	56	56	56	56	58	58	60	60	60	60	62	62	62	62	62	64	64	64	66	66	66	66	68	68
33	42	50	56	56	58	58	58	60	60	60	60	62	62	62	62	64	64	64	64	66	66	66	66	68	68	68
34	44	50	56	56	58	58	60	60	60	60	62	62	62	62	64	64	64	64	66	66	66	66	68	68	68	70
35	44	50	58	58	58	58	60	60	60	62	62	62	62	64	64	64	64	66	66	66	66	68	68	68	70	70
36	44	50	58	58	60	60	60	60	62	62	62	62	64	64	64	64	66	66	66	66	68	68	68	68	70	70

C-02.10 AND C-02.20 SLOPES

①

LENGTH OF DOWNDRAIN (Ft)

Thickness (In) ◑	Embankment Height (Ft)								
	5	6	7	8	9	10	11	12	13
12	14	16	16	16	20	20	20	20	20
13	14	16	16	18	20	20	20	20	22
14	14	16	18	18	20	20	20	20	22
15	14	18	18	18	20	20	20	22	22
16	16	18	18	18	20	20	22	22	22
17	16	18	18	18	20	22	22	22	22
18	16	18	18	18	22	22	22	22	22
19	16	18	18	20	22	22	22	22	24
20	16	18	20	20	22	22	22	24	24
21	16	20	20	20	22	22	24	24	24
22	18	20	20	20	22	22	24	24	24
23	18	20	20	20	22	24	24	24	24
24	18	20	20	20	24	24	24	24	26
25	18	20	20	22	24	24	24	24	26
26	18	20	22	22	24	24	24	26	26
27	18	22	22	22	24	24	26	26	26
28	20	22	22	22	24	26	26	26	26
29	20	22	22	22	26	26	26	26	26
30	20	22	22	24	26	26	26	26	28
31	20	22	24	24	26	26	26	28	28
32	20	24	24	24	26	26	26	28	28
33	22	24	24	24	26	26	28	28	28
34	22	24	24	24	26	28	28	28	28
35	22	24	24	24	28	28	28	28	28
36	22	24	24	26	28	28	28	28	30

C-02.30 SLOPES

GENERAL NOTES

1. For C-02.10 slopes with embankment height over 24', use length for 24' embankment height from table + 2'.
2. For C-02.20 slopes with embankment height over 32', use length for 32' embankment height from table + 2'.
3. For C-02.30 slopes with embankment height over 13', use length for 13' embankment height from table + 2'.
4. For downdrain details, see Std Dwg C-04.20.

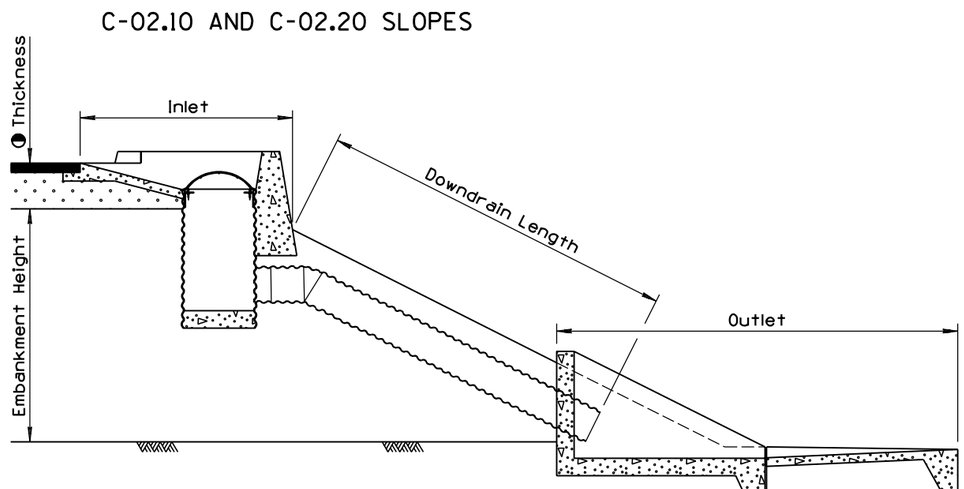

APPROVED FOR DESIGN	STATE OF ARIZONA DEPARTMENT OF TRANSPORTATION ROADWAY STANDARD DRAWINGS	REV.
Mary Viparina		9/04
APPROVED FOR DISTRIBUTION	DOWNDRAIN LENGTH TABLE	DRAWING NO.
Julie Everett		C-04.40

NO	DESCRIPTION OF REVISIONS	MADE BY	DATE
1	REVISED PLAN & SECTION VIEW	RLF	9/04
2	ADDED NEW GENERAL NOTE	RLF	9/04
3			
4			

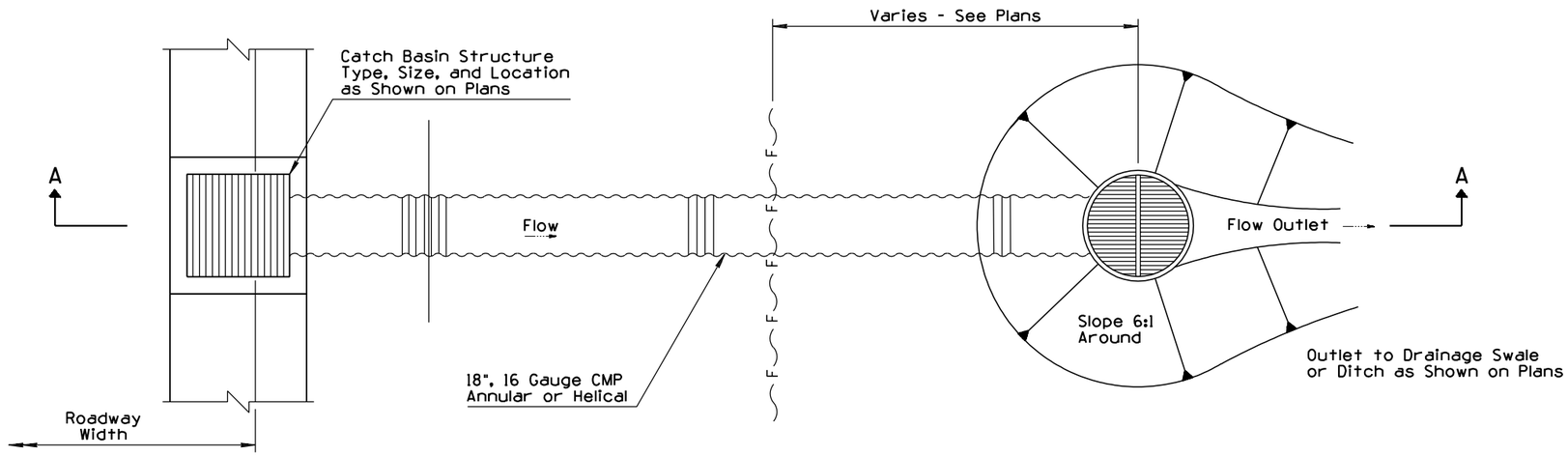

PLAN

1

GENERAL NOTES

1. Stub shall have annular corrugation. Downdrain piping beyond stub may be either annular or helical.
2. Couplings shall be mechanical heat-shrinkable polyolatin sheet; one piece lap type neoprene sheet or slip seam; all 12" minimum width and 18 gauge minimum.
3. Maximum Q Allowable = 8 cfs
   Minimum V Allowable = 1 fps
4. (2) Concrete shall be Class B.

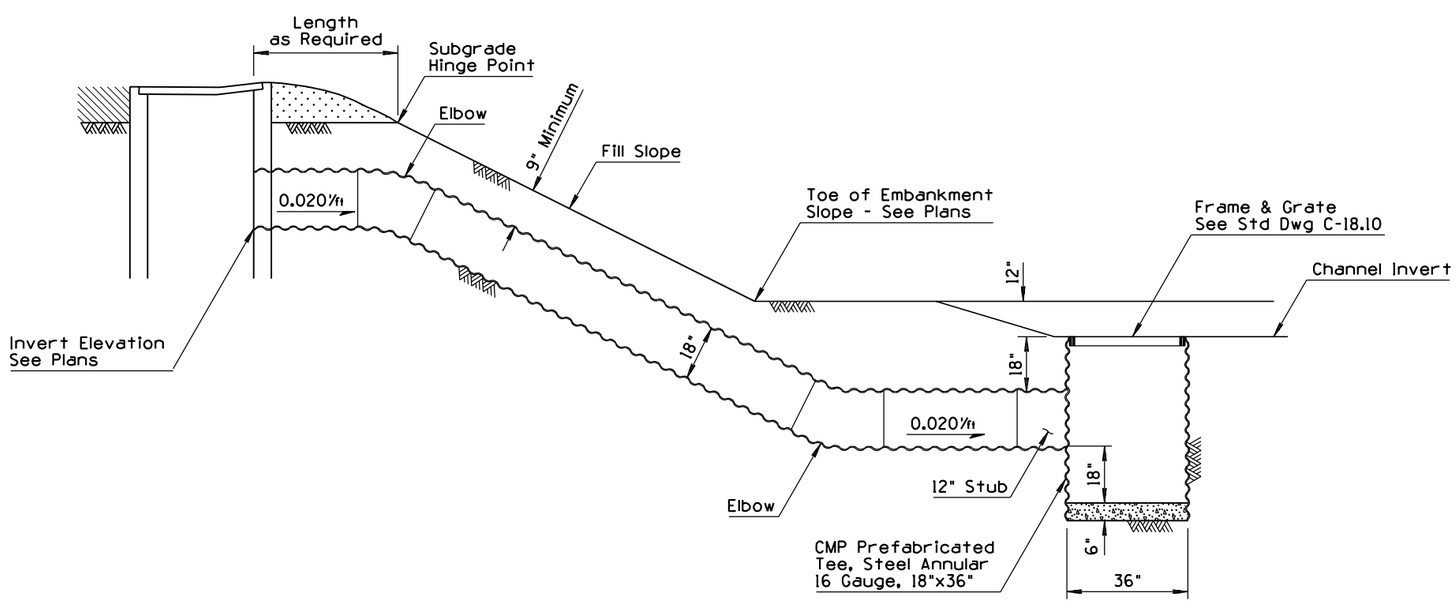

SECTION A-A

1

APPROVED FOR DESIGN	STATE OF ARIZONA DEPARTMENT OF TRANSPORTATION ROADWAY STANDARD DRAWINGS	REV.
		9/04
APPROVED FOR DISTRIBUTION	DOWNDRAIN ENERGY DISSIPATOR	DRAWING NO.
		C-04.50

NO	DESCRIPTION OF REVISIONS	MADE BY	DATE
1	MODIFIED TABLE	RLF	9/04
2	ADDED DEPRESSED CURB & GUTTER	RLF	9/04
3	MODIFIED EMBANKMENT CURB VIEW	RLF	9/04
4			

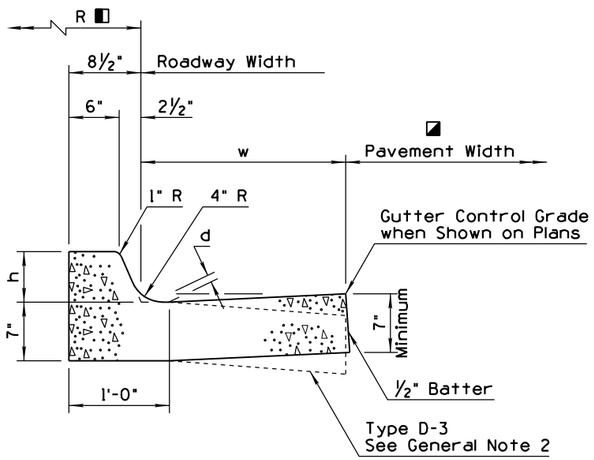

CURB & GUTTER
TYPE D, D-1, D-2 & D-3

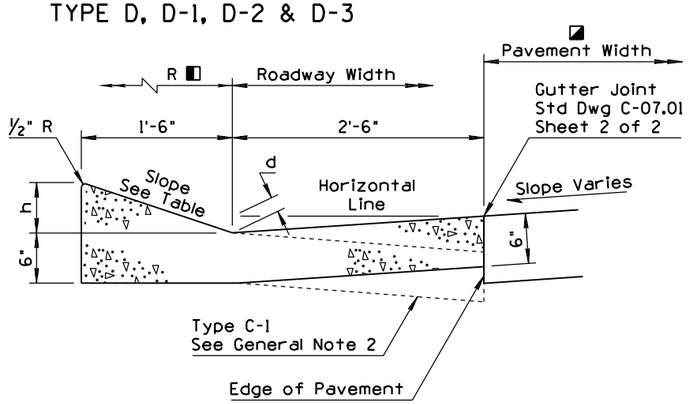

CURB & GUTTER
TYPE B, C & C-1

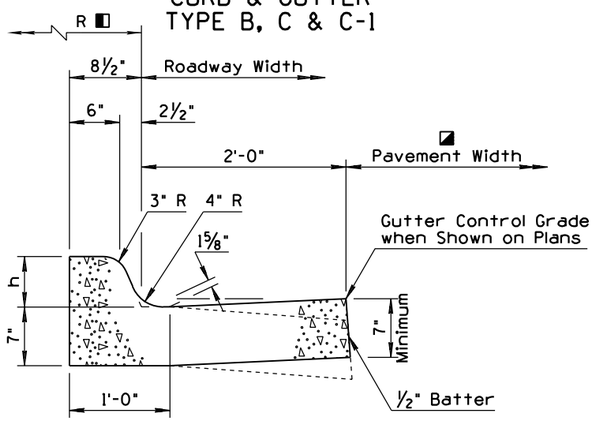

CURB & GUTTER
TYPE G

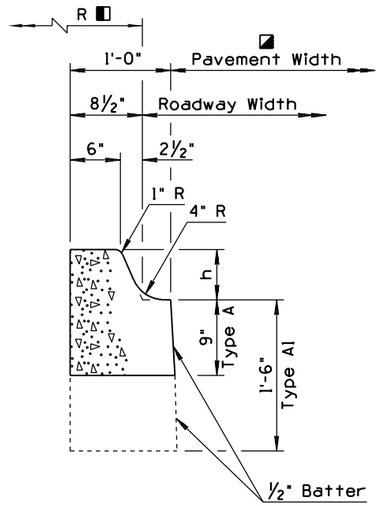

SINGLE CURB
TYPE A & A1

①

URBAN FREEWAY CURB & GUTTER			
Curb & Gutter Type	Curb Height h (In)	Slope	Gutter Depression d (In)
B	6	3:1	2
C	3	6:1	⅝
C-1	3	6:1	N/A

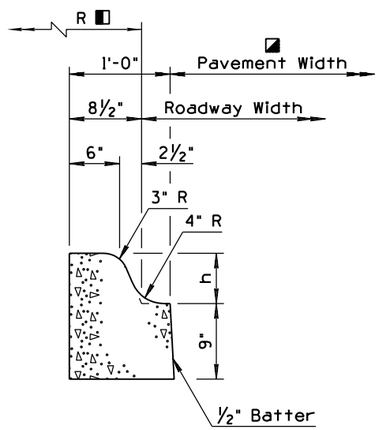

SINGLE CURB
TYPE G

①

Curb & Gutter Type	Curb Height h (In)	Gutter Width w (Ft-In)	Gutter Depression d (In)
A	◑	N/A	N/A
A-1	◑	N/A	N/A
D	◑	2-0	1⅝
D-1	◑	2-6	1¾
D-2	◑	4-6	1¾
D-3	◑	2-0	N/A
G	◑	2-0	N/A

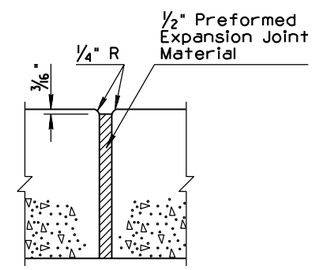

EXPANSION JOINT DETAIL

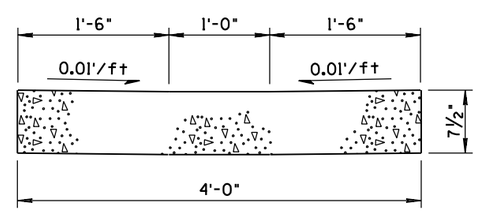

VALLEY GUTTER

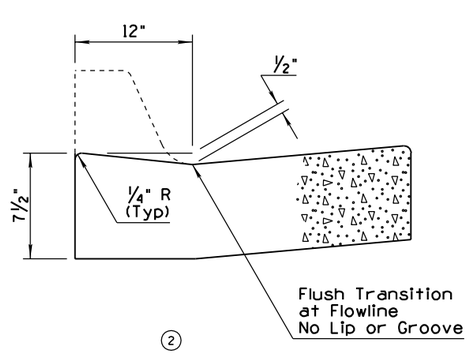

②

DEPRESSED CURB
& GUTTER

GENERAL NOTES

SINGLE CURB AND CURB & GUTTER

1. Single curb and curb & gutter may be constructed by the use of forms or the concrete may be extruded.
2. When the pavement section slopes away from the gutter, the slope of the gutter shall match the pavement cross slope. Therefore, the gutter depression is not applicable.
3. Two-inch deep contraction joints shall be placed in the curb and the gutter at locations which match the joints in adjacent PCCP and at approximate 15' centers when adjacent to AC pavement. Joints shall be either hand tooled or sawn.
4. Expansion joints shall be located at tangent points in curb returns, at structures and at maximum 60' intervals. The ½" joint filler shall extend the full depth of the concrete.
5. Concrete shall be finished with a steel trowel followed by brushing with a fine brush along the length of the curb and gutter.
6. All exposed edges and hand-tooled joints shall be finished with a tool having a ¼" radius, or as noted on the plans.

◪ See Plans

◑ See Plans (6 or 7 inch typical)

◧ Curb Radius when shown on plans

EMBANKMENT CURB

1. No additional finishing will be required after extrusion or removal of the forms when the curb presents a neat appearance and the surface is uniform in texture and color.
2. The curb shall conform to the cross section as shown except that the horizontal dimensions shall not vary more than ½".

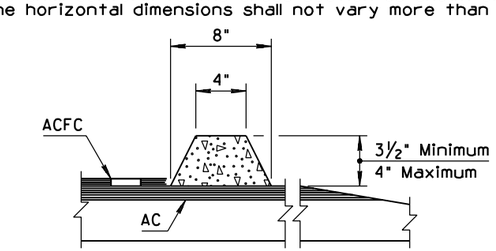

EMBANKMENT CURB

③

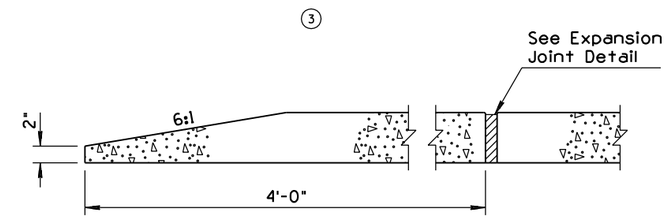

CURB TERMINAL SECTION

APPROVED FOR DESIGN	STATE OF ARIZONA DEPARTMENT OF TRANSPORTATION ROADWAY STANDARD DRAWINGS	REV.
Mary Vipauna		9/04
APPROVED FOR DISTRIBUTION	CURB & GUTTER CURB GUTTER	DRAWING NO.
		C-05.10

NO	DESCRIPTION OF REVISIONS	MADE BY	DATE
1	REISSUED STANDARD DRAWING	RLF	9/04
2			
3			
4			

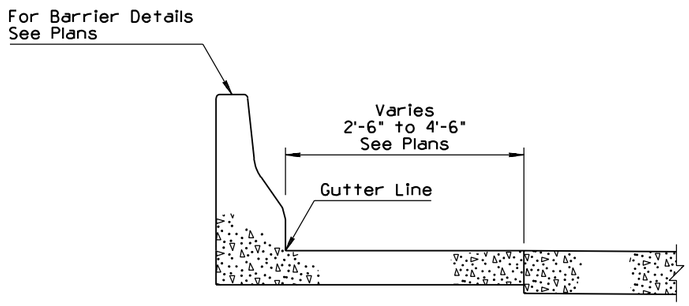

SECTION A-A
CONCRETE BARRIER
APPLICATION

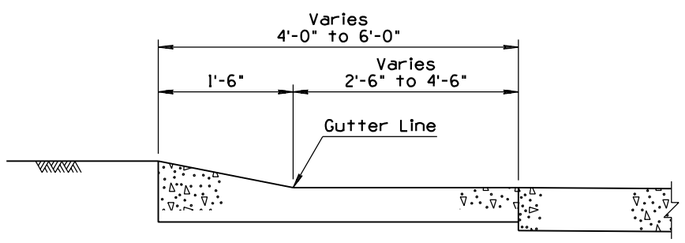

SECTION A-A
CURB & GUTTER
APPLICATION

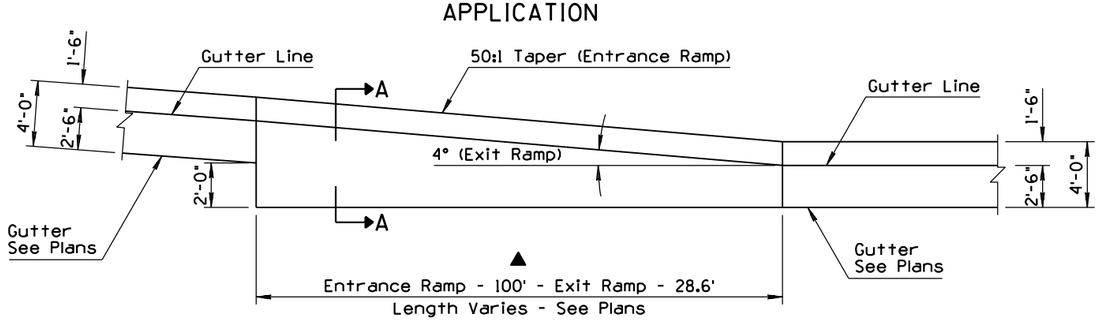

TYPE 1 - GUTTER TRANSITION - AT RAMP TAPERS

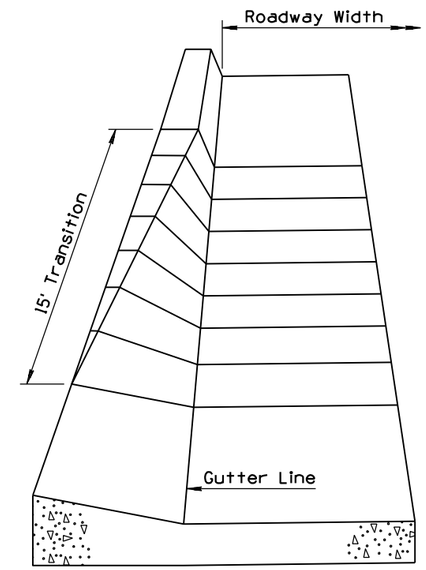

PERSPECTIVE VIEW

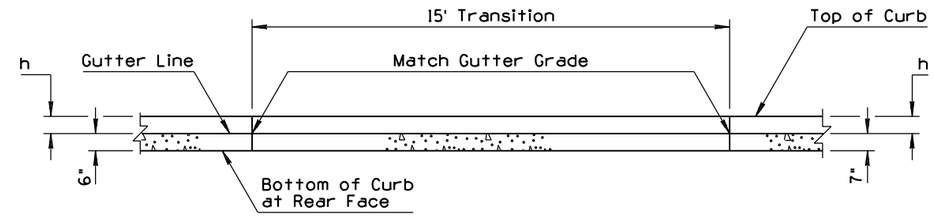

SECTION B-B

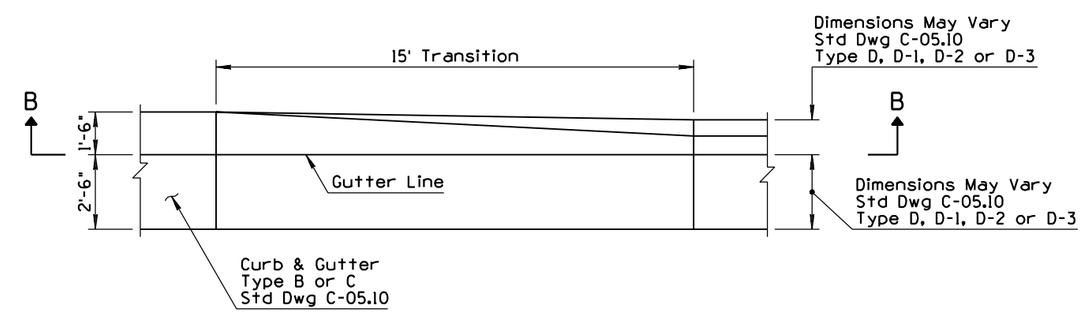

TYPE 2 - CURB & GUTTER TRANSITION

GENERAL NOTES

1. All gutter flow lines shall be constructed to an accurate grade.
2. See Slotted Drain Std Dwgs C-13.60 and C-15.91 for curb & gutter with slotted drain.
3. See Std Dwg C-05.10 for additional general notes and dimensions.
4. See Std Dwg C-07.04 for typical curb and gutter transition locations.

▲ Dimension May Vary Where Exit Occurs on Curves, See Plans

APPROVED FOR DESIGN Mary Vipanna	STATE OF ARIZONA DEPARTMENT OF TRANSPORTATION ROADWAY STANDARD DRAWINGS	REV. 9/04
APPROVED FOR DISTRIBUTION [signature]	CURB & GUTTER TRANSITIONS	DRAWING NO. 1 C-05.12 Sheet 1 of 3

NO	DESCRIPTION OF REVISIONS	MADE BY	DATE
1	MODIFIED SECTION A-A	PNB	7/94
2	ADDED JOINT REQUIREMENT	PNB	7/94
3			
4			

▲ Curb Height Varies 0" to 7" Maximum in Depressed Curb Area Beyond the End of Barrier. See Plans for Curb Height.

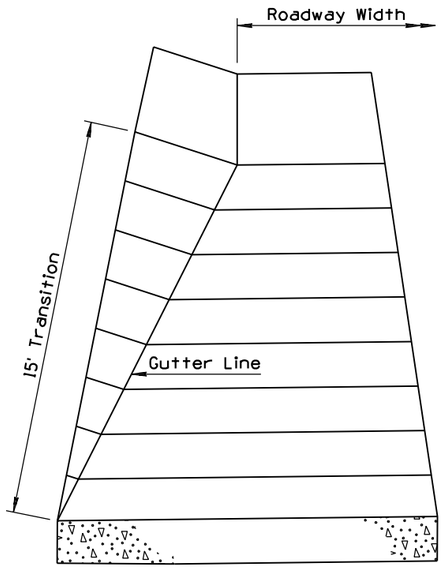

PERSPECTIVE VIEW

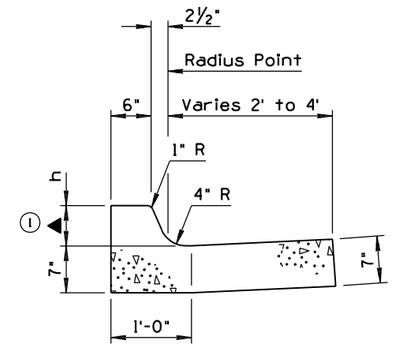

SECTION A-A

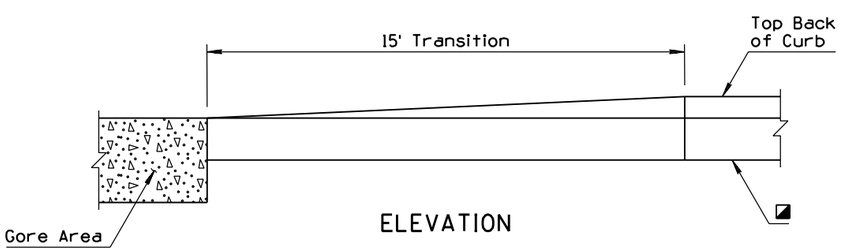

ELEVATION

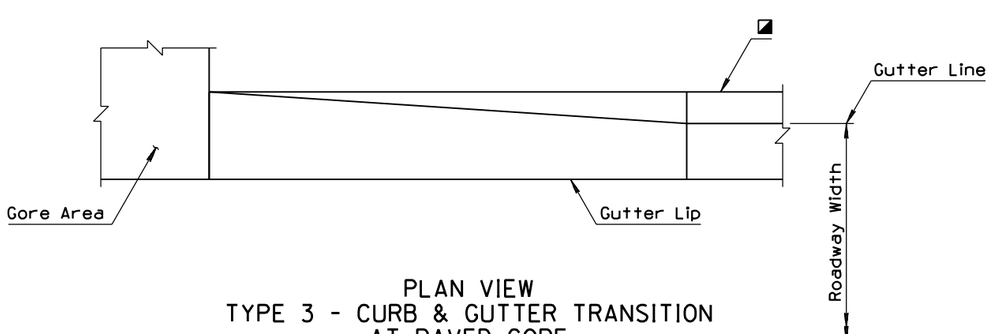

PLAN VIEW
TYPE 3 - CURB & GUTTER TRANSITION
AT PAVED GORE

◪ Curb & Gutter
Type B, C, C-1, D, D-1, D-2 or D-3

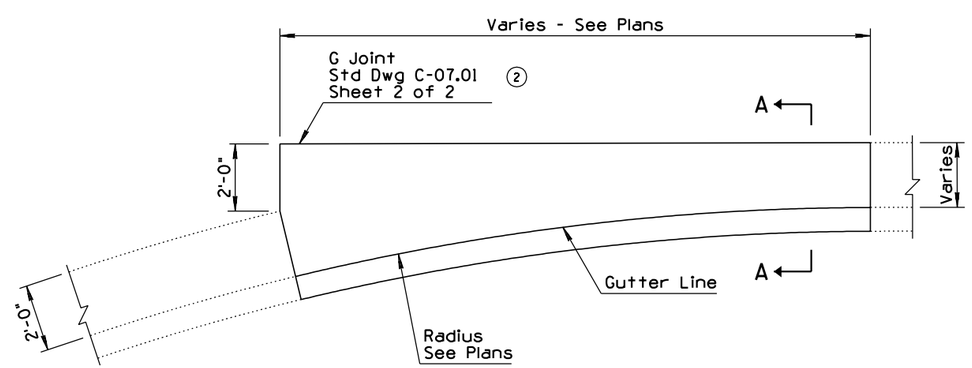

TYPE 4 - CURB & GUTTER TRANSITION

APPROVED FOR DESIGN	STATE OF ARIZONA DEPARTMENT OF TRANSPORTATION ROADWAY STANDARD DRAWINGS	REV.
		7/94
APPROVED FOR DISTRIBUTION	CURB & GUTTER TRANSITIONS	DRAWING NO.
		C-05.12 Sheet 2 of 3

NO	DESCRIPTION OF REVISIONS	MADE BY	DATE
1	REISSUED STANDARD	RLF	9/04
2			
3			
4			

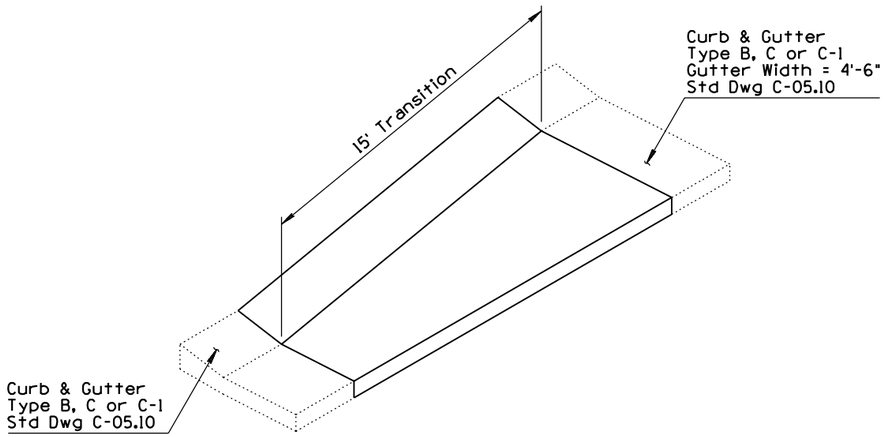

TYPE 5 - CURB & GUTTER TRANSITION

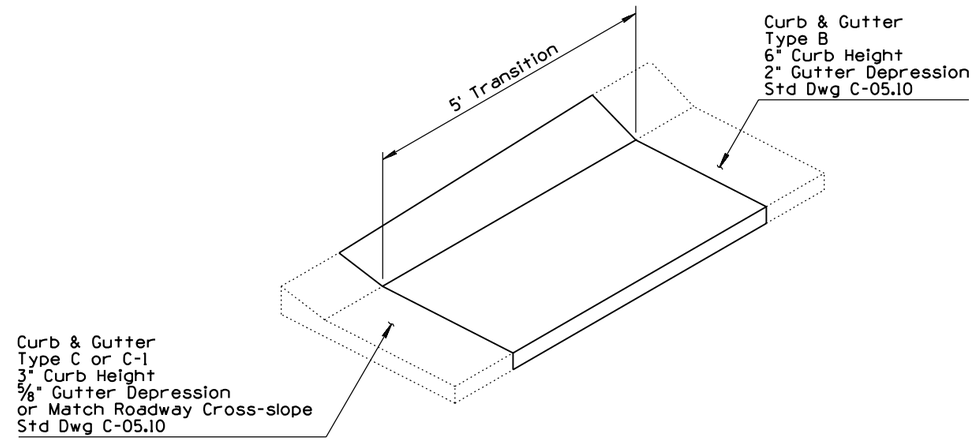

TYPE 8 - CURB & GUTTER TRANSITION

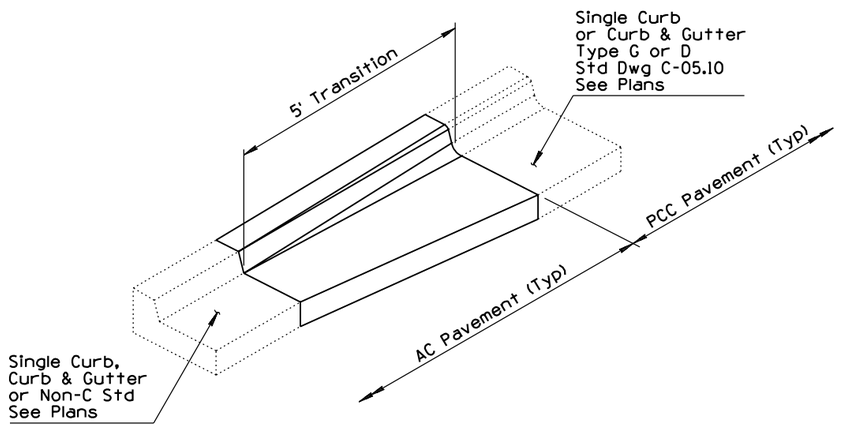

TYPE 6 - SINGLE CURB OR CURB & GUTTER TRANSITION
(Curb & Gutter Shown)

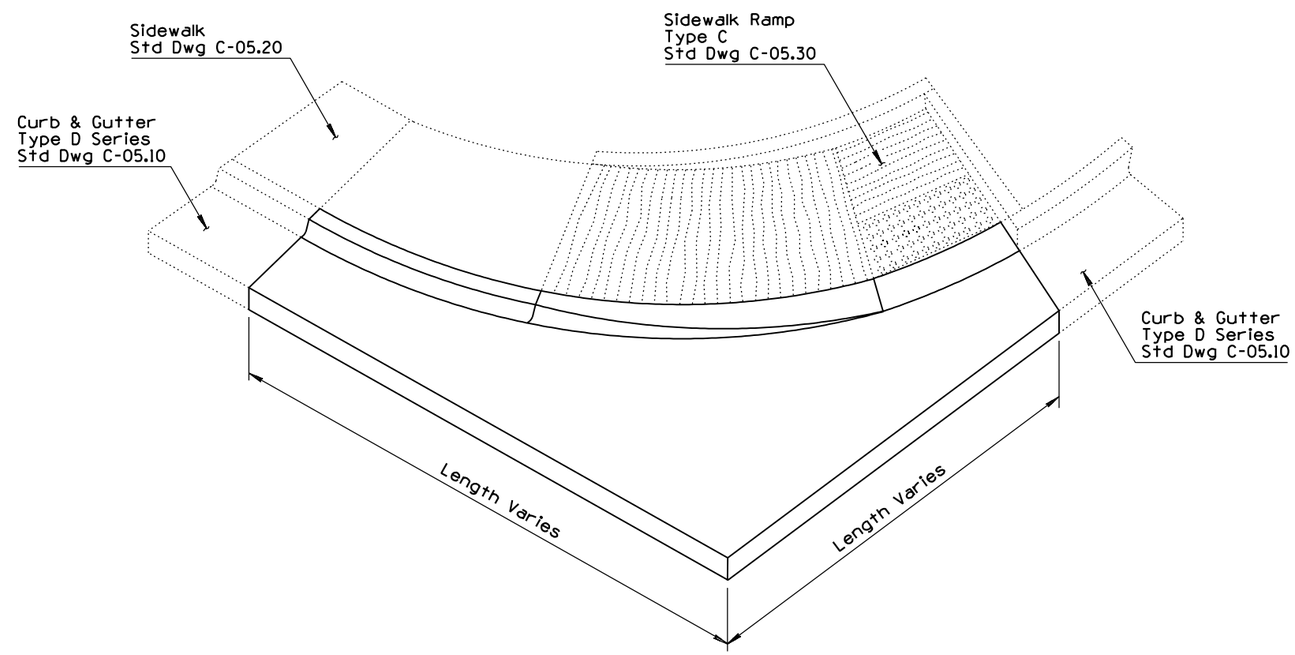

TYPE 9 - CURB & GUTTER TRANSITION

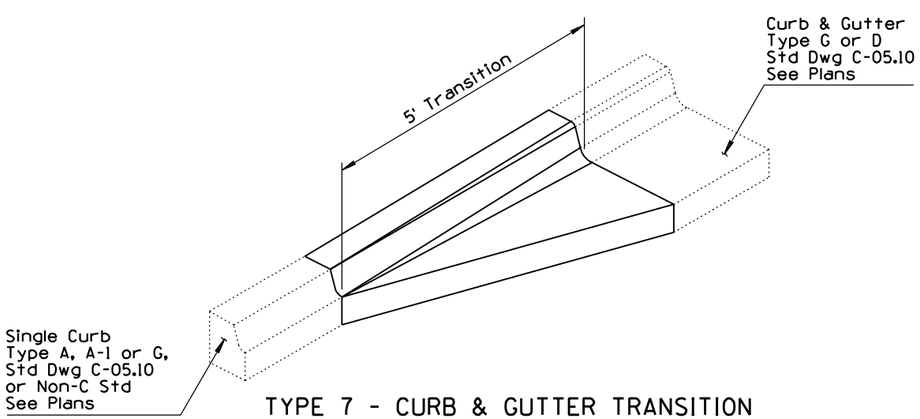

TYPE 7 - CURB & GUTTER TRANSITION

APPROVED FOR DESIGN	STATE OF ARIZONA DEPARTMENT OF TRANSPORTATION ROADWAY STANDARD DRAWINGS	REV. 9/04
APPROVED FOR DISTRIBUTION	CURB AND GUTTER TRANSITIONS	DRAWING NO. C-05.12 (1) Sheet 3 of 3

NO	DESCRIPTION OF REVISIONS	MADE BY	DATE
1	REISSUED STANDARD DRAWING	RLF	9/04
2			
3			
4			

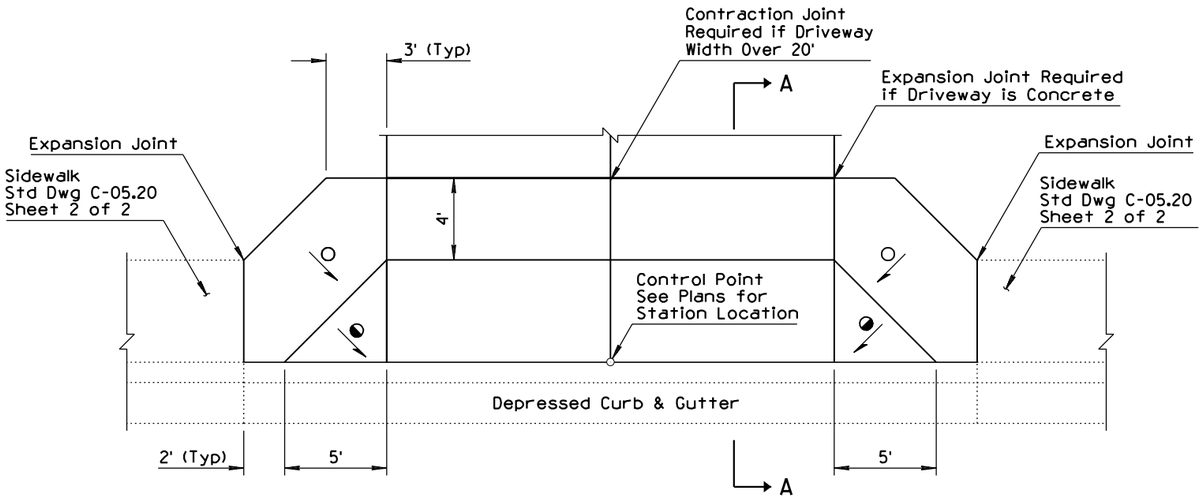

DRIVEWAY WITH SIDEWALK
ADJACENT TO CURB

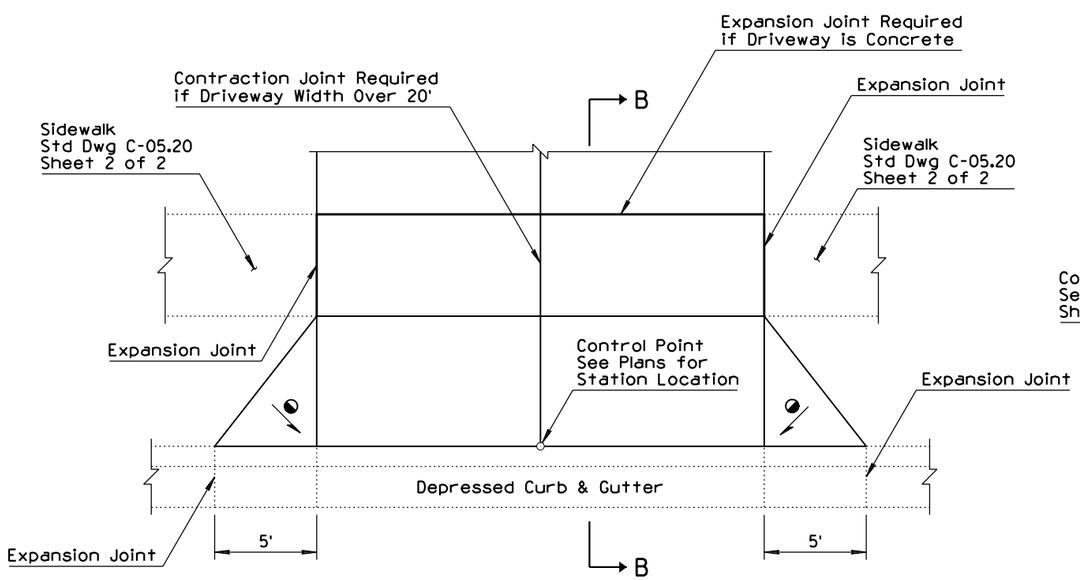

DRIVEWAY WITH SIDEWALK SETBACK

GENERAL NOTES

1. Unless otherwise specified, driveways shall be 6" thick.
2. Two-inch deep transverse contraction joints shall be placed in driveways if the driveway width is over 20'. If the driveway thickness is greater than 6", then the contraction joint depth shall be T/3, where T is the thickness of the driveway. Joints shall be either formed or sawn. Formed joints shall be finished with a tool having a ¼" radius. See Sheet 2 of 2 for the Contraction Joint Detail.
3. Expansion joints shall be located between driveways and sidewalks and all abutting structures. The ½" joint filler shall extend the full depth of the concrete. See Sheet 2 of 2 for the Expansion Joint Detail.
4. Concrete shall be finished by means of a float, then steel trowelled and then broomed with a fine brush in a transverse direction.

LEGEND

Minimum slope = 0.01' Per Ft

Maximum slope = 0.02' Per Ft

Straight grade with downward slope

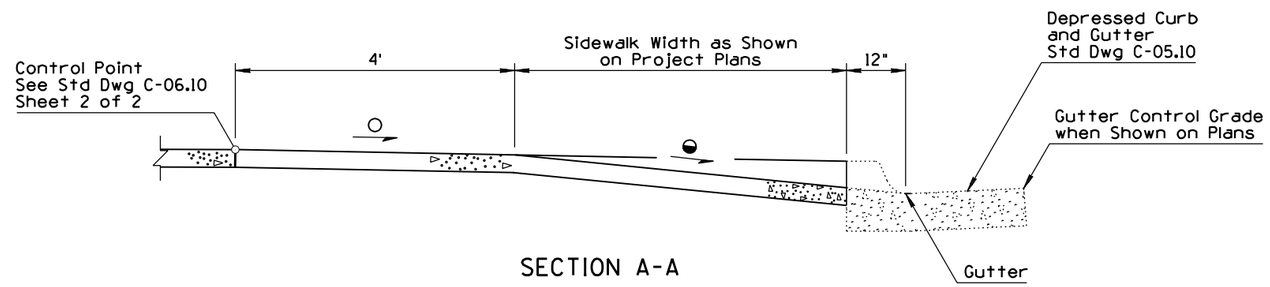

SECTION A-A

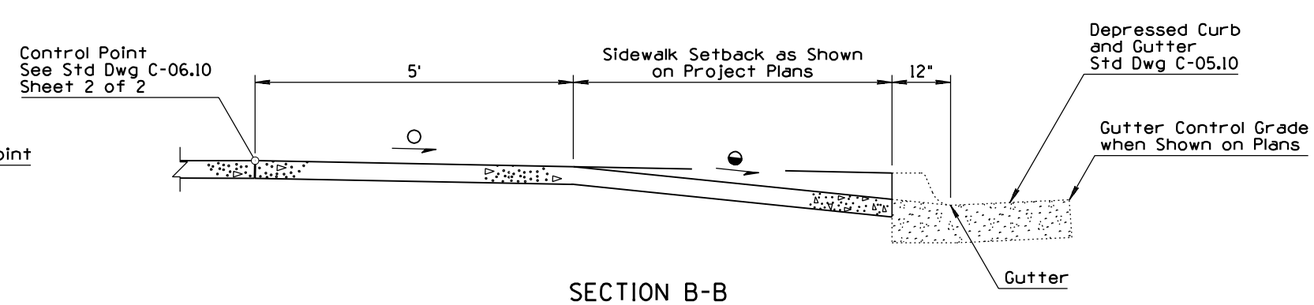

SECTION B-B

APPROVED FOR DESIGN	STATE OF ARIZONA DEPARTMENT OF TRANSPORTATION ROADWAY STANDARD DRAWINGS	REV.
		9/04
APPROVED FOR DISTRIBUTION	CONCRETE DRIVEWAYS & SIDEWALKS DRIVEWAYS	DRAWING NO. C-05.20 (1) Sheet 1 of 2

NO	DESCRIPTION OF REVISIONS	MADE BY	DATE
1	NEW GENERAL NOTE 5, REARRANGED 3, 4 & 5	RLF	9/04
2			
3			
4			

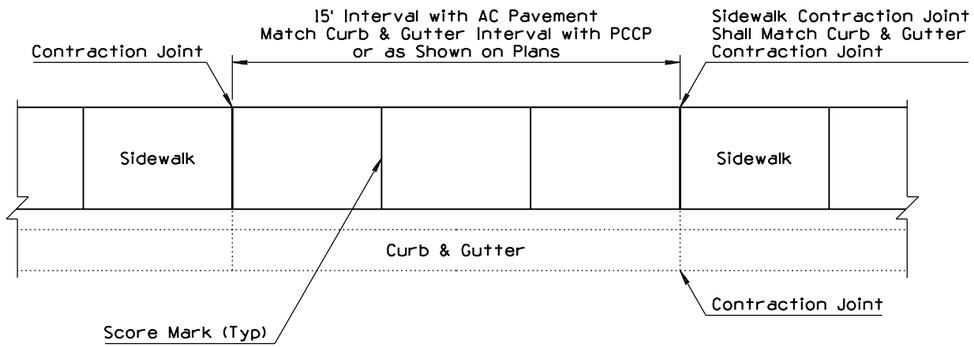

SIDEWALK ADJACENT TO CURB

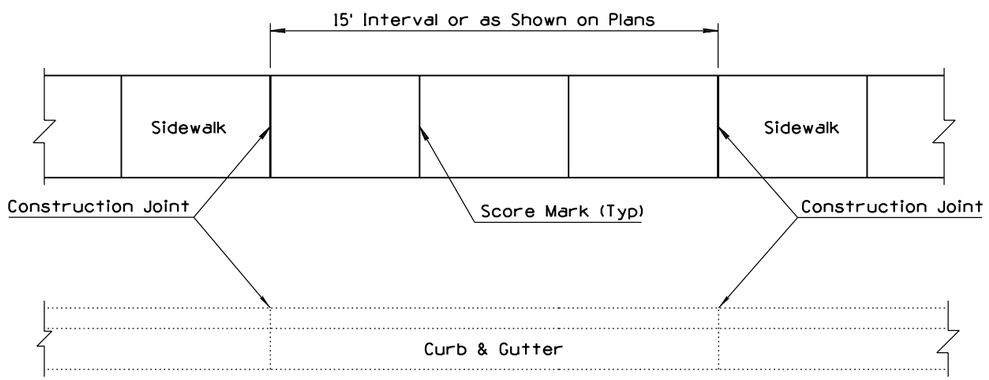

SIDEWALK SETBACK FROM CURB

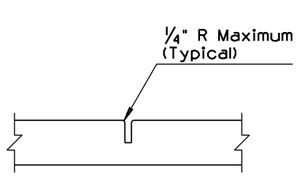

CONTRACTION JOINT DETAIL

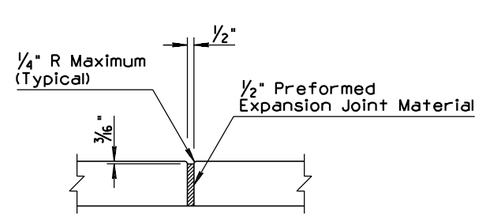

EXPANSION JOINT DETAIL

① GENERAL NOTES

1. Unless otherwise specified, sidewalks shall be 4" thick.
2. One-inch deep transverse contraction joints shall be placed in sidewalks at intervals of approximately 15' or at a spacing that matches adjacent curb and gutter. If the sidewalk is over 7' in width, a 2" deep longitudinal contraction joint shall be placed in the center of the sidewalk. The maximum area of sidewalk without contraction joints or scoring lines shall be approximately 36 square feet. Joints shall be either formed or sawn. Formed joints shall be finished with a tool having a 1/4" radius.
3. Score marks shall be 1/4" in depth. They shall be placed at 5' spacing when the contraction joint interval is 15' and at 6' spacing when the contraction joint interval is 12'.
4. Expansion joints shall be located between sidewalks and driveways and all abutting structures. Expansion joints shall match the joints in the adjacent concrete pavement or existing concrete curb and sidewalk. Maximum length of sidewalk without an expansion joint shall be 60 transverse feet. The 1/2" joint filler shall extend the full depth of the concrete.
5. Concrete shall be finished by means of a float, then steel trowelled and then broomed with a fine brush in a transverse direction.

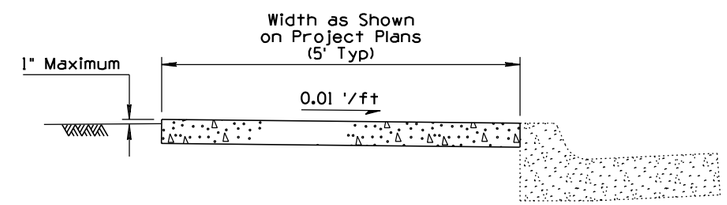

CONCRETE SIDEWALK ADJACENT TO CURB

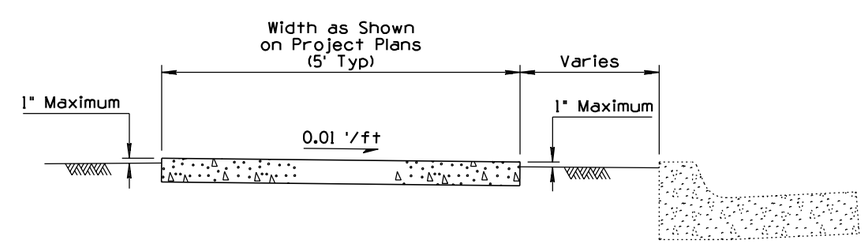

CONCRETE SIDEWALK SETBACK FROM CURB

APPROVED FOR DESIGN	STATE OF ARIZONA DEPARTMENT OF TRANSPORTATION ROADWAY STANDARD DRAWINGS	REV.
		7/94
APPROVED FOR DISTRIBUTION	CONCRETE DRIVEWAYS & SIDEWALKS SIDEWALKS	DRAWING NO. C-05.20 Sheet 2 of 2

NO	DESCRIPTION OF REVISIONS	MADE BY	DATE
1	NEW STANDARD DRAWING	RLF	9/04
2			
3			
4			

◧ Ramp Shall Be Laid Out Radially from the Back of the 5' Wide Detectable Warning Strip, Except That In No Case Shall It Be Less Than 4' Wide at the Back of the Sidewalk

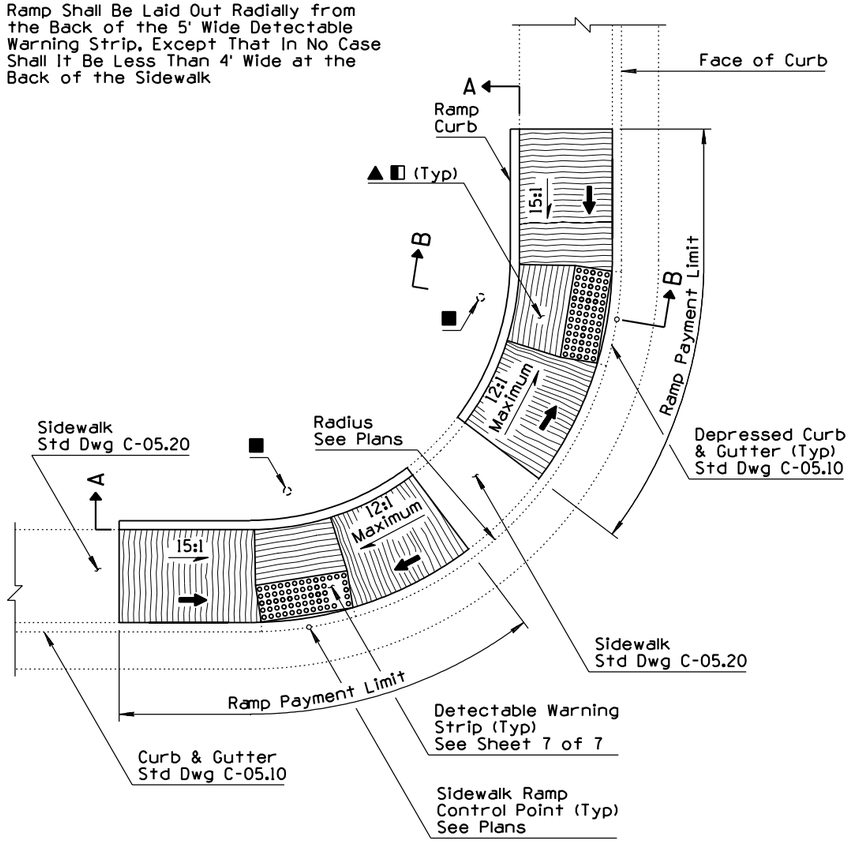

TWO CROSSING DIRECTIONS AT CORNER

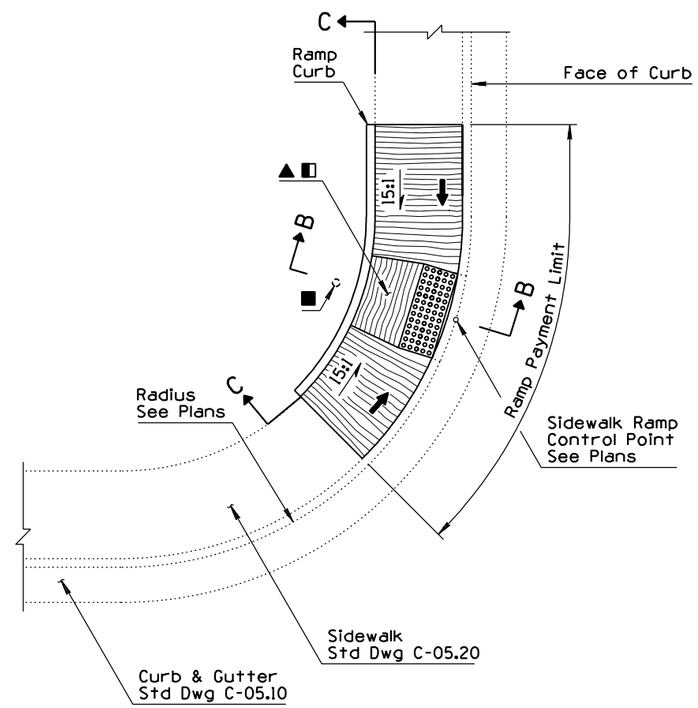

ONE CROSSING DIRECTION AT CORNER

GENERAL NOTES

1. Ramp centerline shall be radial from the face of the curb at the Sidewalk Ramp Control Point.
2. The ramp slopes as shown are the steepest allowed, except as provided for under Note 3.
3. Ramp lengths shall not exceed 10' for any installation. Ten-foot long ramps may be steeper than the slopes shown in Note 2.
4. Drainage inlets should not be located within the marked crosswalks, or if crosswalks aren't marked, within the area a standard marked crosswalk would enclose.
5. Concrete shall receive a rough broom finish as shown.
6. See Std Dwgs C-05.10 and C-05.20 for joint details.

● See Note 3

◑ 10" Maximum to Face of Pedestrian Push Button

■ Pedestrian Push Button Pole When Shown on Traffic Plans. See Traffic Signal Plans for Additional Information

LEGEND

▲ Minimum Slope = 100:1 (0.01 '/ft)

Maximum Slope = 50:1 (0.02 '/ft)

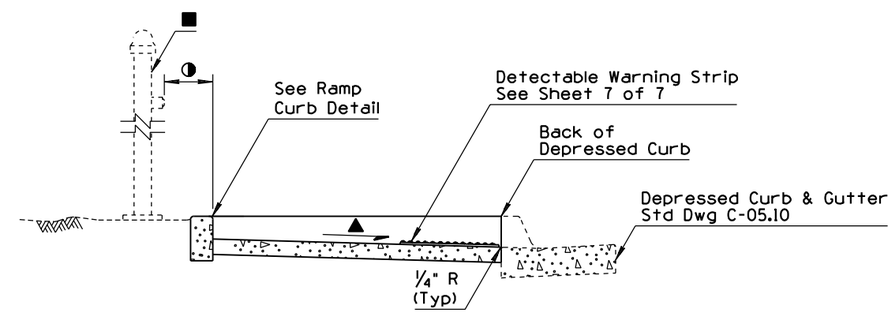

SECTION B-B

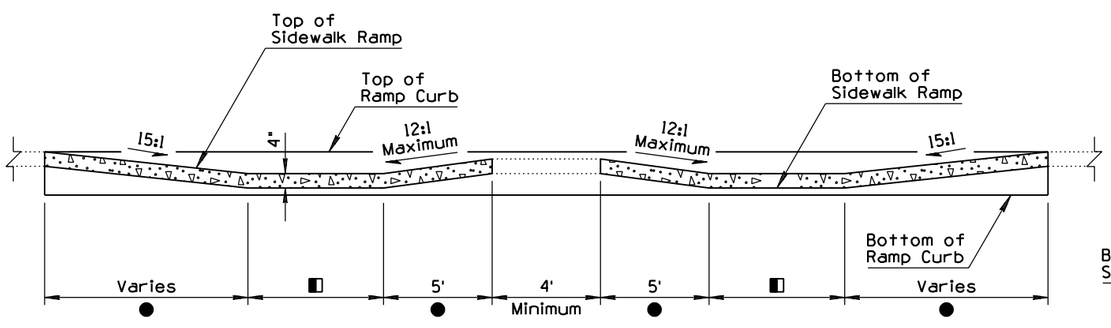

SECTION A-A

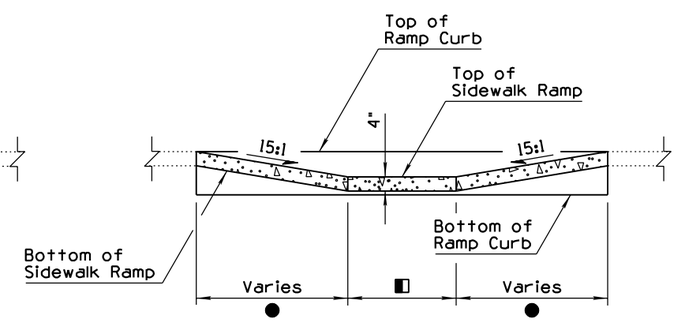

SECTION C-C

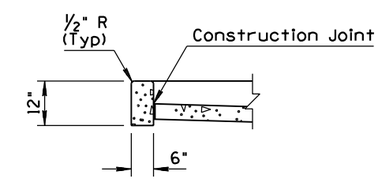

RAMP CURB DETAIL

PARALLEL SIDEWALK RAMP

APPROVED FOR DESIGN	STATE OF ARIZONA DEPARTMENT OF TRANSPORTATION ROADWAY STANDARD DRAWINGS	REV. 9/04
APPROVED FOR DISTRIBUTION	SIDEWALK RAMP TYPE A	DRAWING NO. C-05.30 Sheet 1 of 7

NO	DESCRIPTION OF REVISIONS	MADE BY	DATE
1	NEW STANDARD DRAWING	RLF	9/04
2			
3			
4			

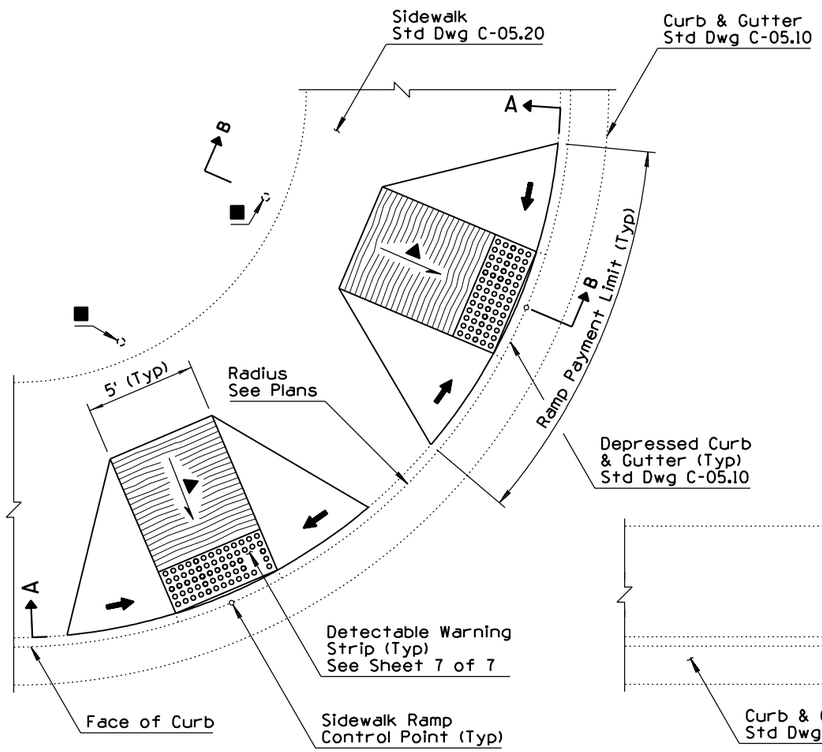

TWO CROSSING DIRECTIONS
AT CORNER

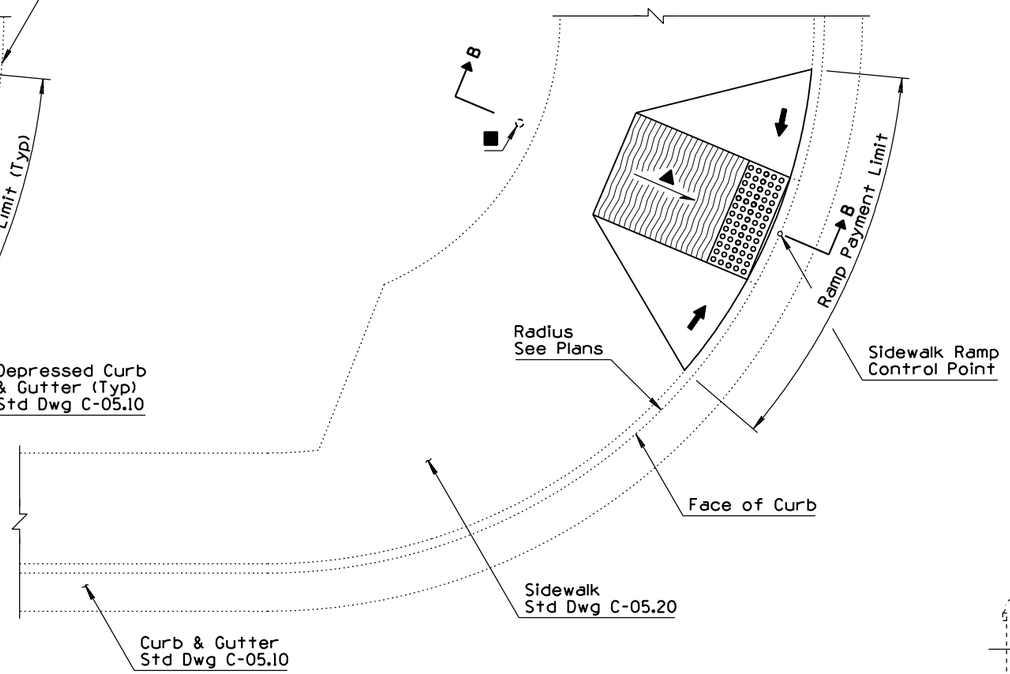

ONE CROSSING DIRECTION
AT CORNER

GENERAL NOTES

1. Ramp centerline shall be radial from the face of the curb at the sidewalk ramp control point.
2. The 10:1 wing and 15:1 ramp slopes are the steepest allowed, except as provided for under Note 3.
3. Ramp lengths shall not exceed 10' for any installation. Ten-foot long ramps may be steeper than the slope shown in Note 2.
4. Drainage inlets should not be located within the marked crosswalks, or if crosswalks aren't marked, within the area a standard marked crosswalk would enclose.
5. Concrete shall receive a rough broom finish as shown. The side slope wings do not receive a broom finish.
6. The Engineer may approve replacing the side slope wing with a curb at a location where access to the side of a ramp run is blocked by a pole, utility box, other obstruction, or by a non-accessible surface such as a dirt planter strip.
7. See Std Dwgs C-05.10 and C-05.20 for joint details.

■ Pedestrian Push Button Pole When Shown on Traffic Plans. See Traffic Signal Plans for Additional Information

◑ 10" Maximum to Face of Pedestrian Push Button

LEGEND

▲ Minimum Slope = 100:1 (0.01 '/ft)

Maximum Slope = 50:1 (0.02 '/ft)

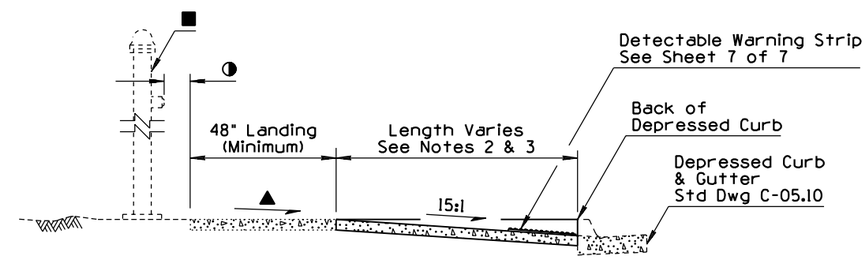

SECTION
B-B

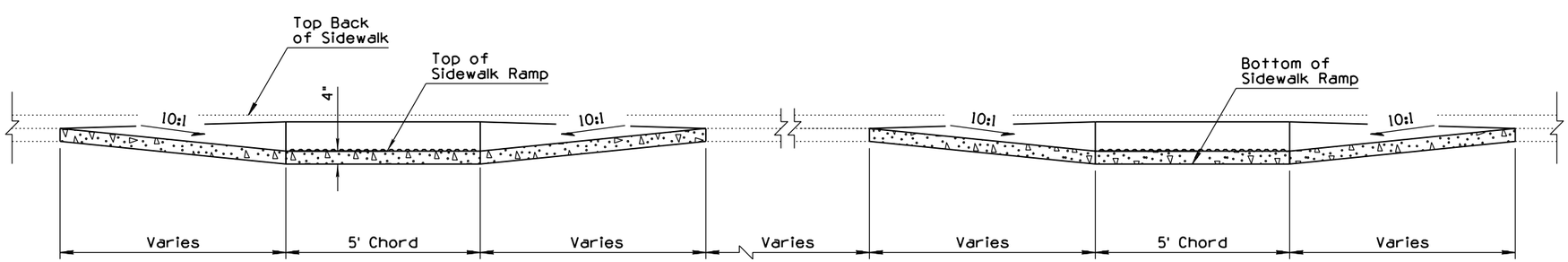

SECTION
A-A

PERPENDICULAR CURB RAMP

APPROVED FOR DESIGN	STATE OF ARIZONA DEPARTMENT OF TRANSPORTATION ROADWAY STANDARD DRAWINGS	REV.
Mary Viparina		9/04
APPROVED FOR DISTRIBUTION	SIDEWALK RAMP TYPE B	DRAWING NO. 1 C-05.30 Sheet 2 of 7

NO	DESCRIPTION OF REVISIONS	MADE BY	DATE
1	REISSUED STANDARD DRAWING AS SHEET 3 OF 7	RLF	9/04
2			
3			
4			

◧ Ramp Shall Be Laid Out Radially from the Back of the 5' Wide Detectable Warning Strip, Except That In No Case Shall It Be Less Than 4' Wide at the Back of the Sidewalk

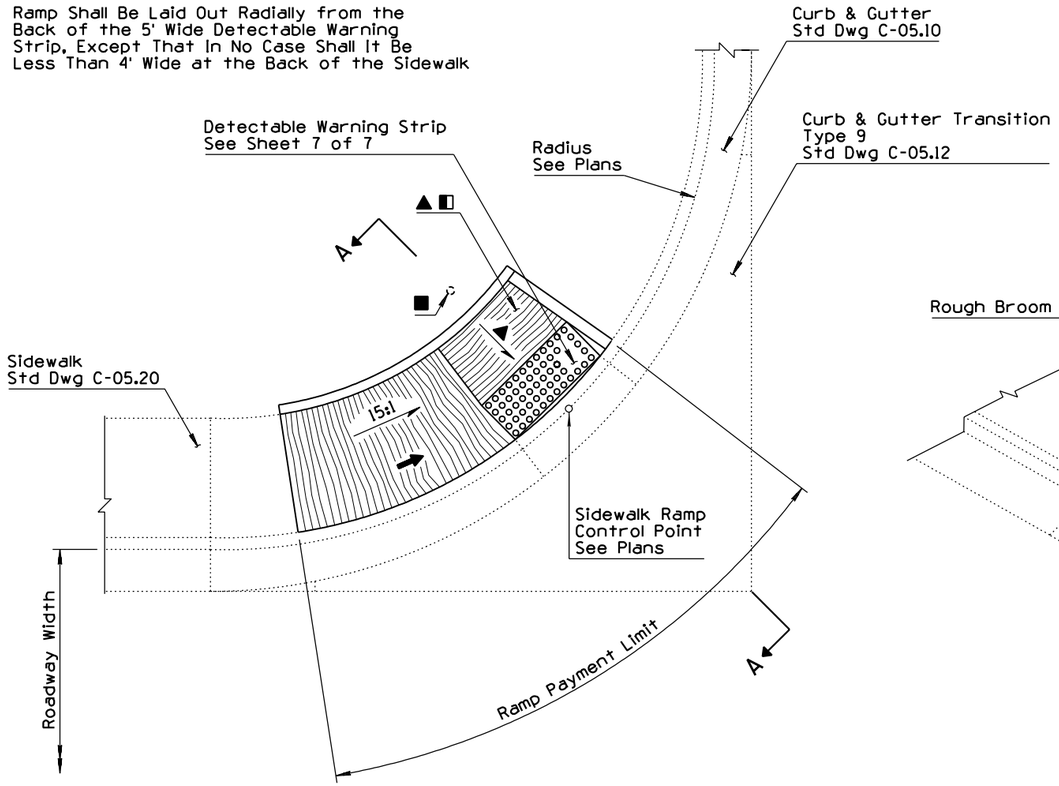

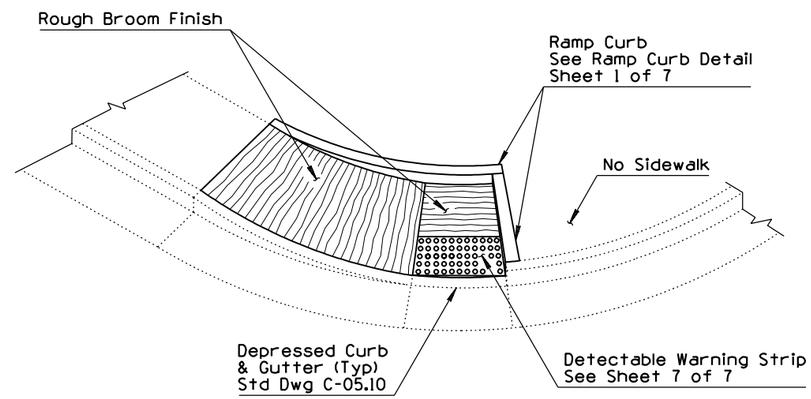

PERSPECTIVE

GENERAL NOTES

1. For use where sidewalk is not continuous.
2. Ramp centerline shall be radial from the face of the curb at the Sidewalk Ramp Control Point.
3. The 15:1 ramp slope measured at the back of sidewalk is the steepest allowed, except as provided for under Note 4.
4. Ramp lengths shall not exceed 10' for any installation. Ten-foot long ramps may be steeper than the slope shown in Note 3.
5. The top of the Ramp Curb along the back of the Sidewalk Ramp shall match the elevation of the adjacent back of sidewalk and run parallel to the Sidewalk Ramp. The Ramp Curb along the side of the Sidewalk Ramp shall match the elevation at the back of the Curb & Gutter and the back of Ramp Curb.
6. Drainage inlets should not be located within the marked crosswalks, or if crosswalks aren't marked, within the area a standard marked crosswalk would enclose.
7. Concrete shall receive a rough broom finish as shown.
8. See Std Dwgs C-05.10 and C-05.20 for joint details.

■ Pedestrian Push Button Pole When Shown on Traffic Plans. See Traffic Signal Plans for Additional Information

◑ 10" Maximum to Face of Pedestrian Push Button

LEGEND

▲ Minimum Slope = 100:1 (0.01 '/ft)

→ Maximum Slope = 50:1 (0.02 '/ft)

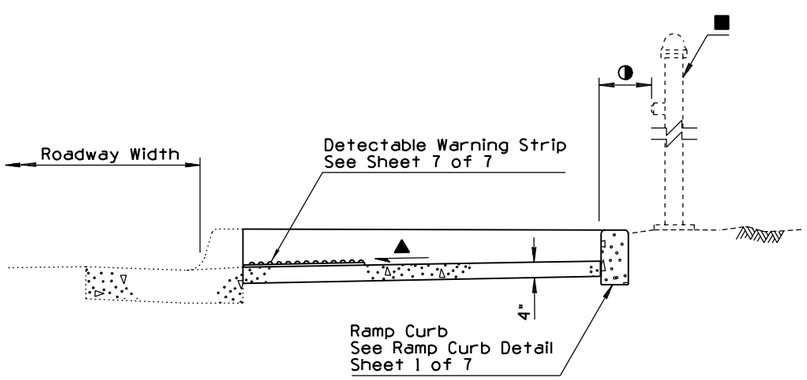

SECTION A-A

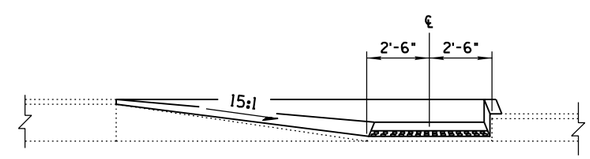

ELEVATION
DEPRESSED CURB AT SIDEWALK RAMP

SIDEWALK RAMP AT SIDEWALK TERMINUS

APPROVED FOR DESIGN	STATE OF ARIZONA DEPARTMENT OF TRANSPORTATION ROADWAY STANDARD DRAWINGS	REV.
Mary Viparina		9/04
APPROVED FOR DISTRIBUTION	SIDEWALK RAMP TYPE C	DRAWING NO. 1
		C-05.30 Sheet 3 of 7

NO	DESCRIPTION OF REVISIONS	MADE BY	DATE
1	REISSUED STANDARD DRAWING AS SHEET 4 OF 7	RLF	9/04
2			
3			
4			

◧ Ramp Shall Be Laid Out Radially from the Back of the 5' Wide Detectable Warning Strip, Except That In No Case Shall It Be Less Than 4' Wide at the Back of the Sidewalk

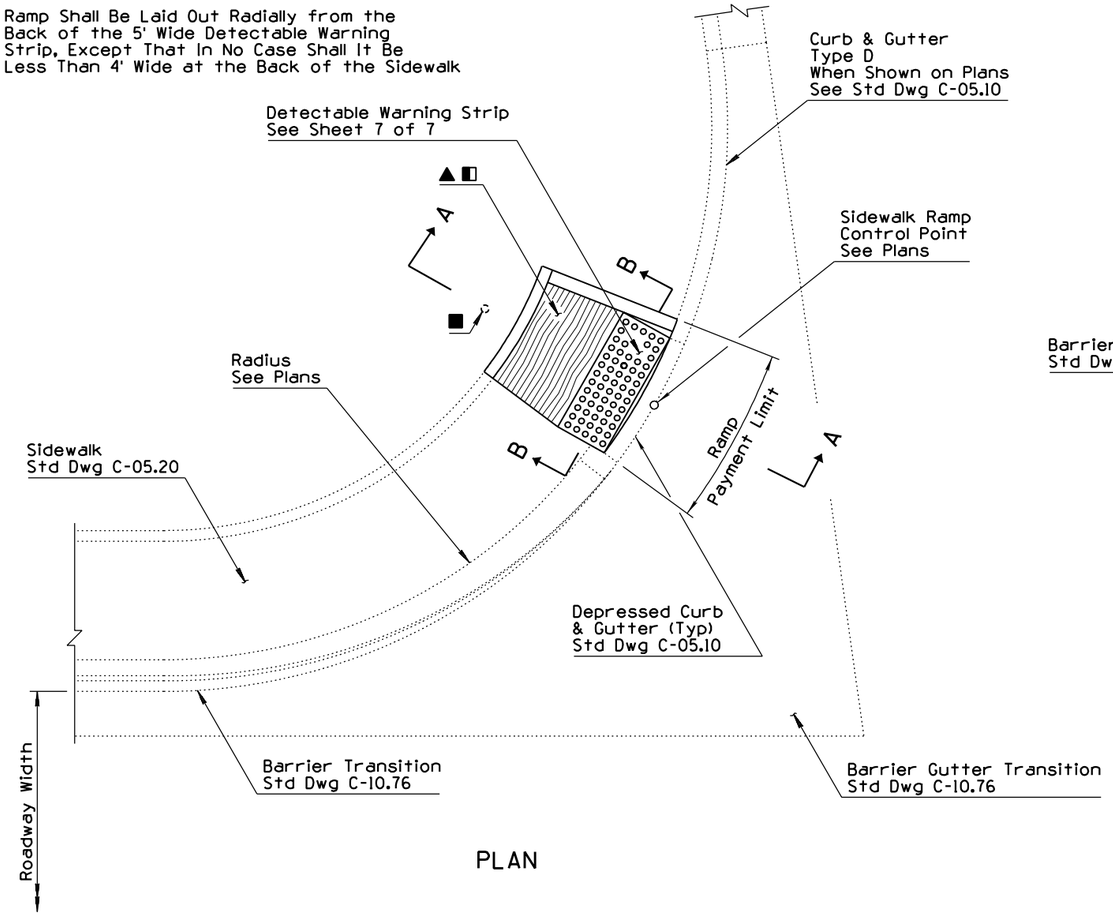

PLAN

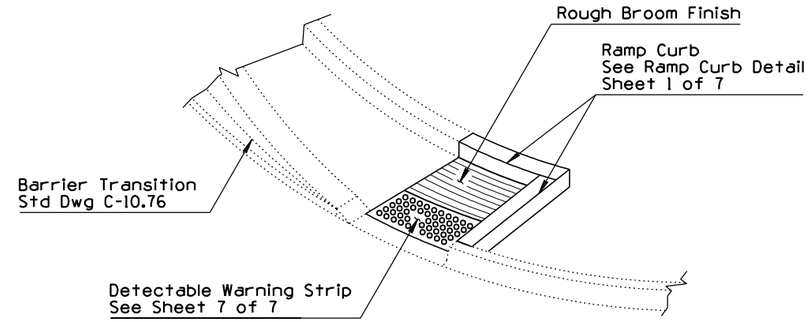

PERSPECTIVE

GENERAL NOTES

1. For use where sidewalk is not continuous.
2. Ramp centerline shall be radial from the face of the curb at the Sidewalk Ramp Control Point.
3. The top of the Ramp Curb along the back of the Sidewalk Ramp shall match the elevation of the adjacent back of sidewalk and run parallel to the Sidewalk Ramp. The Ramp Curb along the side of the Sidewalk Ramp shall match the elevation at the back of the Curb & Gutter and the back of Ramp Curb.
4. Drainage inlets should not be located within marked crosswalks, or if crosswalks aren't marked, within the area a standard marked crosswalk would enclose.
5. Concrete shall receive a rough broom finish as shown.
6. See Std Dwgs C-05.10 and C-05.20 for joint details.

■ Pedestrian Push Button Post When Shown on Traffic Plans. See Traffic Signal Plans for Additional Information

◑ 10" Maximum to Face of Pedestrian Push Button

LEGEND

▲ Minimum Slope = 100:1 (0.01 '/ft)

Maximum Slope = 50:1 (0.02 '/ft)

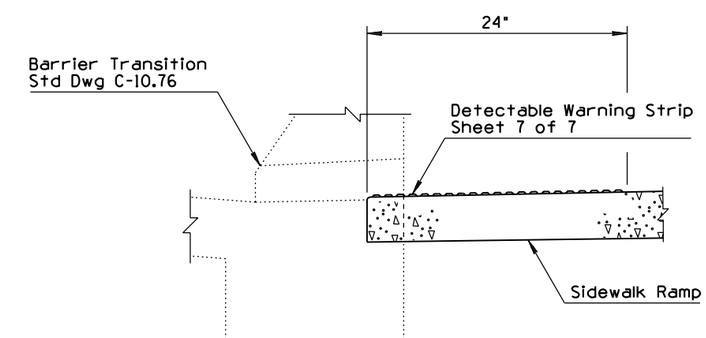

DETAIL

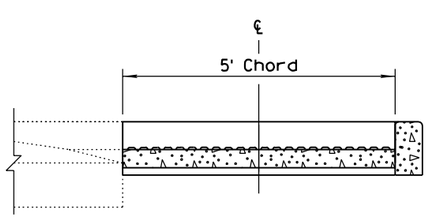

SECTION B-B

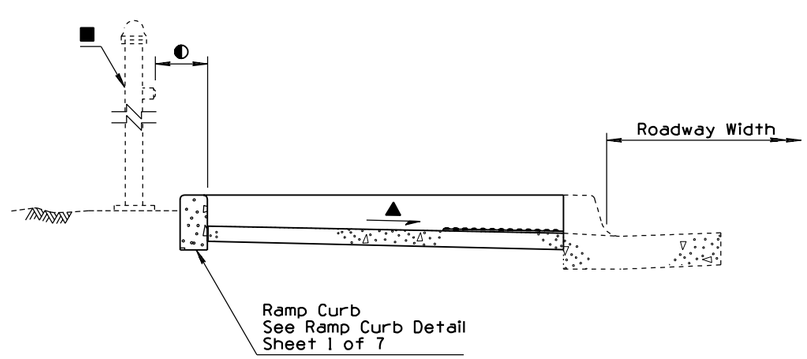

SECTION A-A

SIDEWALK RAMP AT SIDEWALK TERMINUS
SIDEWALK BEHIND BARRIER

APPROVED FOR DESIGN	STATE OF ARIZONA DEPARTMENT OF TRANSPORTATION ROADWAY STANDARD DRAWINGS	REV. 9/04
APPROVED FOR DISTRIBUTION	SIDEWALK RAMP TYPE D	DRAWING NO. ① C-05.30 Sheet 4 of 7

NO	DESCRIPTION OF REVISIONS	MADE BY	DATE
1	REISSUED STANDARD DRAWING AS SHEET 5 OF 7	RLF	9/04
2			
3			
4			

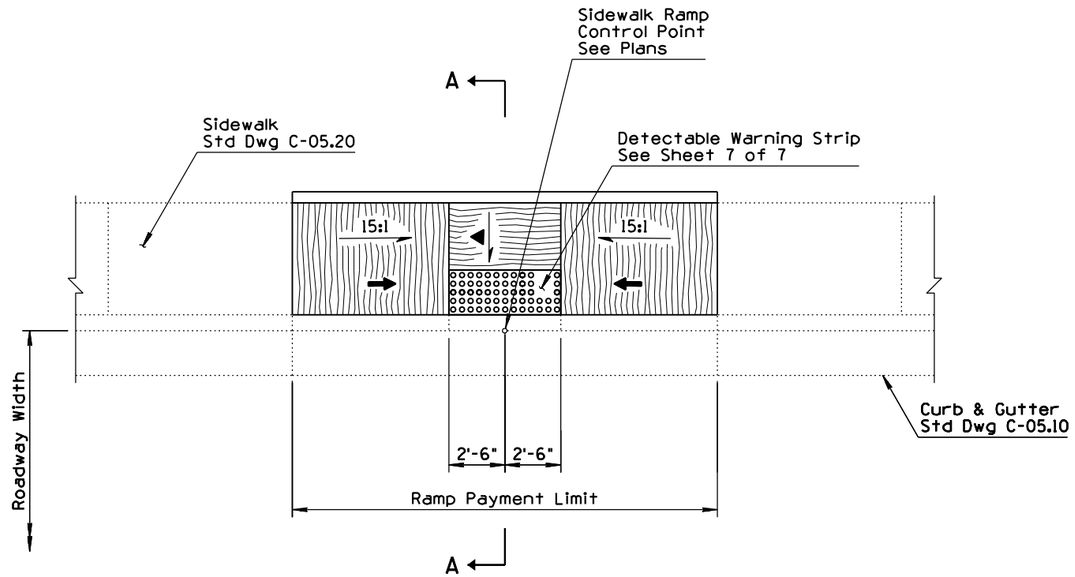

PLAN

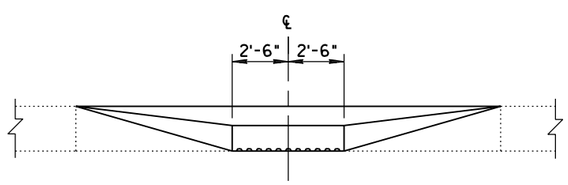

ELEVATION
DEPRESSED CURB AT SIDEWALK RAMP

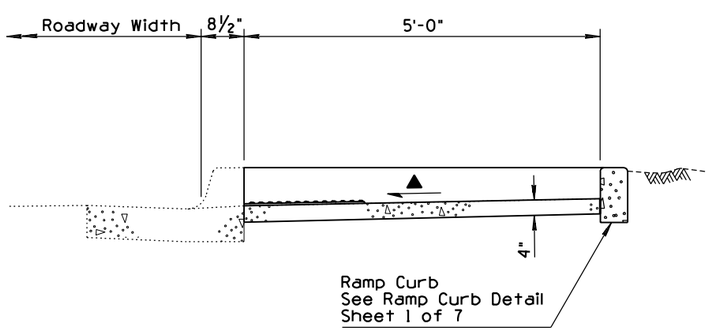

SECTION A-A

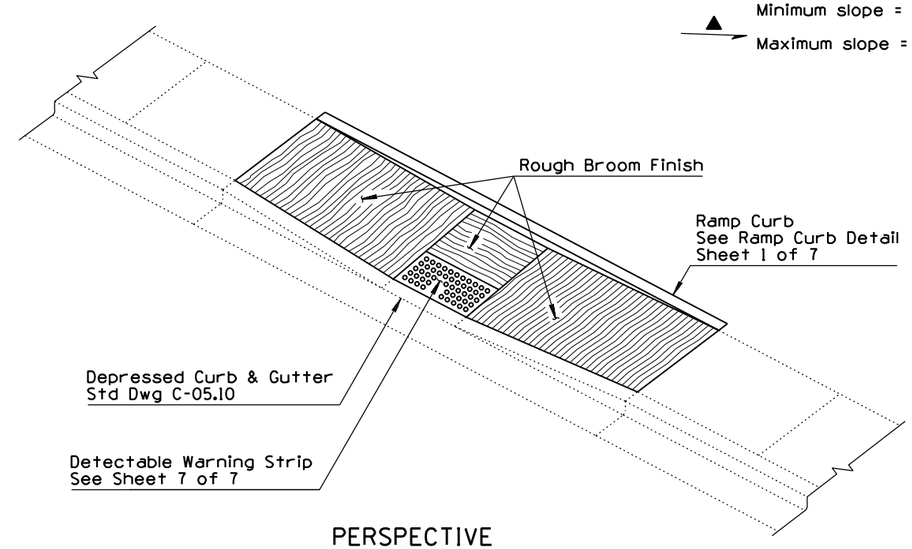

PERSPECTIVE

GENERAL NOTES

1. For use at mid-block locations.
2. Ramp centerline shall be perpendicular to the face of the curb at the Sidewalk Ramp Control Point.
3. The 15:1 ramp slope is the steepest allowed, except as provided for under Note 4.
4. Ramp lengths shall not exceed 10' for any installation. Ten-foot long ramps may be steeper than the slope shown in Note 3.
5. For sidewalk widths greater than shown on C-05.20, the overall Sidewalk Ramp depth shall match the sidewalk width.
6. Ramp curb height to match elevation at back of adjacent sidewalk.
7. Drainage inlets should not be located within the marked crosswalks, or if crosswalks aren't marked, within the area a standard marked crosswalk would enclose.
8. Concrete shall receive a rough broom finish as shown.
9. See Std Dwgs C-05.10 and C-05.20 for joint details.

LEGEND

▲ Minimum slope = 100:1 (0.01 '/ft)

→ Maximum slope = 50:1 (0.02 '/ft)

APPROVED FOR DESIGN	STATE OF ARIZONA DEPARTMENT OF TRANSPORTATION ROADWAY STANDARD DRAWINGS	REV.
Mary Vipauna		9/04
APPROVED FOR DISTRIBUTION	SIDEWALK RAMP TYPE E	DRAWING NO. 1 C-05.30 Sheet 5 of 7

NO	DESCRIPTION OF REVISIONS	MADE BY	DATE
1	REISSUED STANDARD AS SHEET 6 OF 7	RLF	9/04
2			
3			
4			

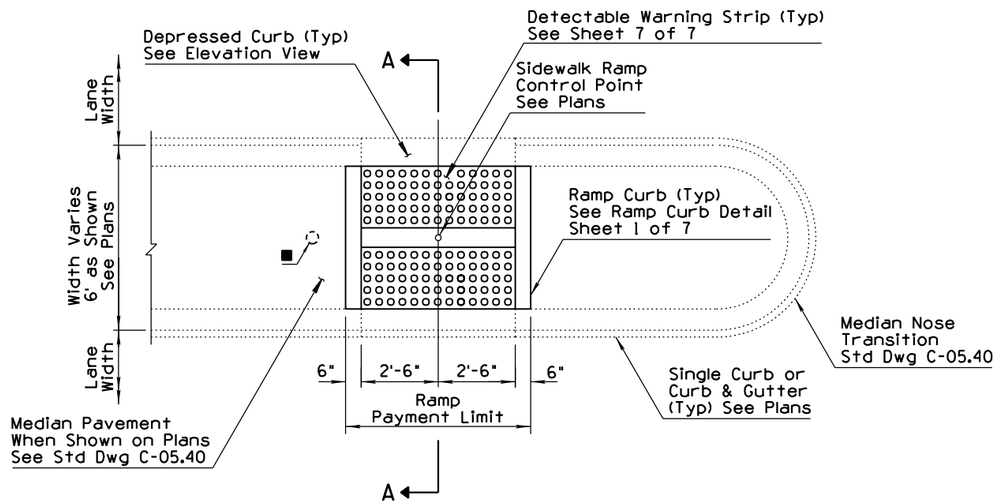

PLAN

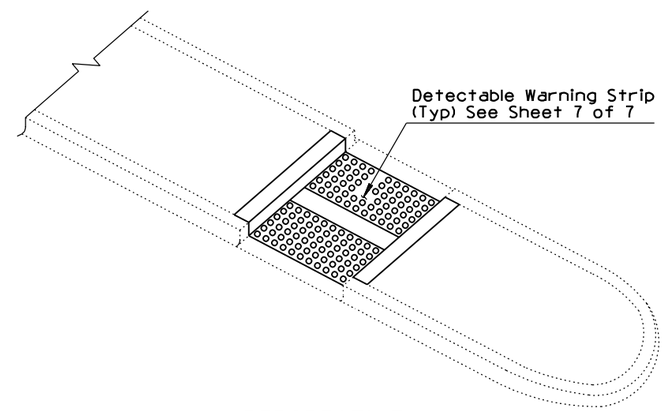

PERSPECTIVE
(For Median Widths Greater Than 5'-5")

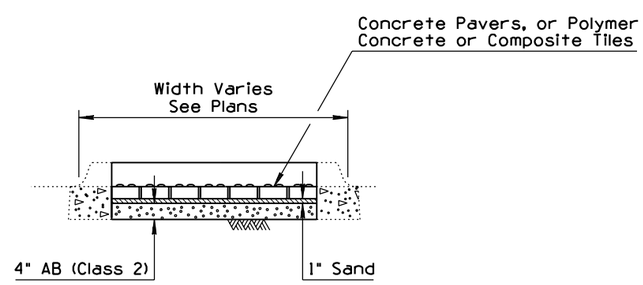

SECTION A-A
(For Median Widths Less Than 5'-5")

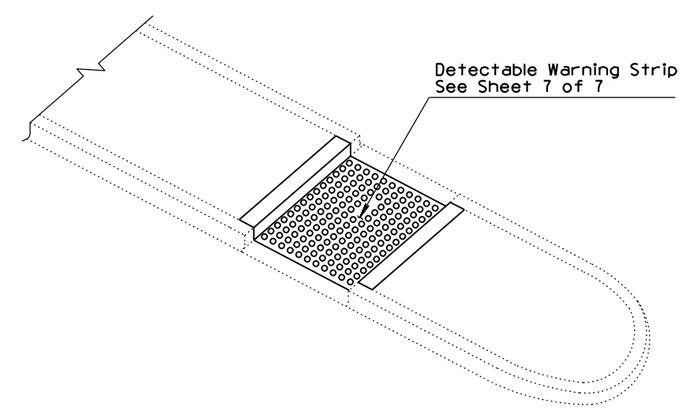

PERSPECTIVE
(For Median Widths 5'-5" And Less)
See Note 1

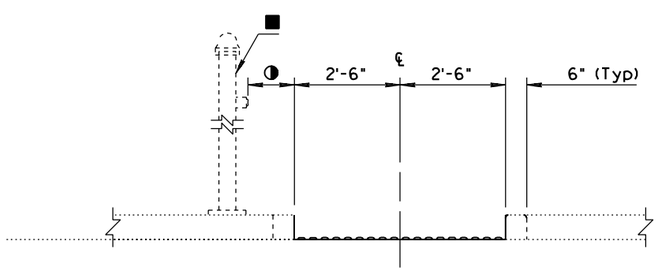

ELEVATION
DEPRESSED CURB AT SIDEWALK RAMP

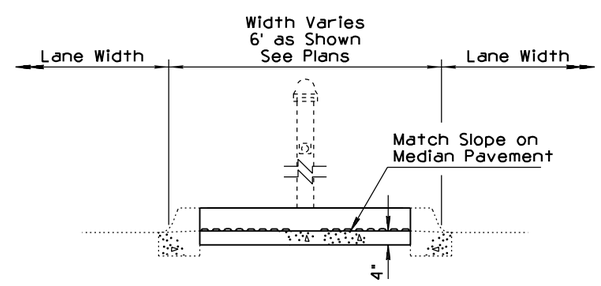

SECTION A-A
(For Median Widths Greater Than 5'-5")

GENERAL NOTES

1. For median widths 5'-5" and less, the Detectable Warning Strip shall be continuous from back-of-curb to back-of-curb. The Detectable Warning Strip shall not extend beyond the back of curb. Modular units such as bricks or tiles shall be used to construct the Detectable Warning Strip. Partial domes at the edge of the Strip shall be ground flush with the brick or tile surface.
2. Use Type A1 curb if median is to be landscaped.
3. Single curb shown; see plans for Curb & Gutter application.

■ Pedestrian Push Button Pole When Shown on Plans. See Traffic Signal Plans for Additional Information

◑ 10" Maximum to Face of Pedestrian Push Button

SIDEWALK RAMP AT MEDIAN ISLAND CROSSING

APPROVED FOR DESIGN	STATE OF ARIZONA DEPARTMENT OF TRANSPORTATION ROADWAY STANDARD DRAWINGS	REV. 9/04
APPROVED FOR DISTRIBUTION	SIDEWALK RAMP TYPE F	DRAWING NO. C-05.30 (1) Sheet 6 of 7

NO	DESCRIPTION OF REVISIONS	MADE BY	DATE
1	NEW STANDARD DRAWING	RLF	9/04
2			
3			
4			

LEGEND

- ● 11/16 " Minimum (Typ) (0.65" Minimum ADA Actual)
- ▲ 1 5/8" to 2 3/8" (Typ) (1.6" to 2.4" ADA Actual)
- ◧ 7/8" to 1 3/8" (Typ) (0.9" to 1.4" ADA Actual)
- ■ 50% to 65% of ◧

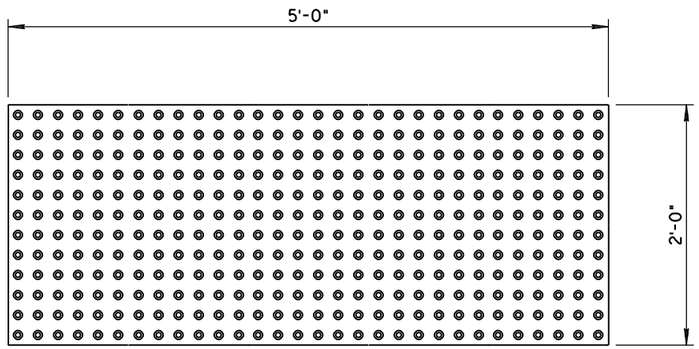

DETECTABLE WARNING STRIP
PLAN

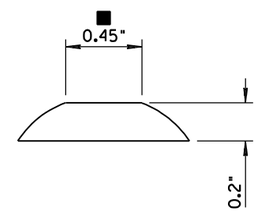

TRUNCATED DOME
ELEVATION

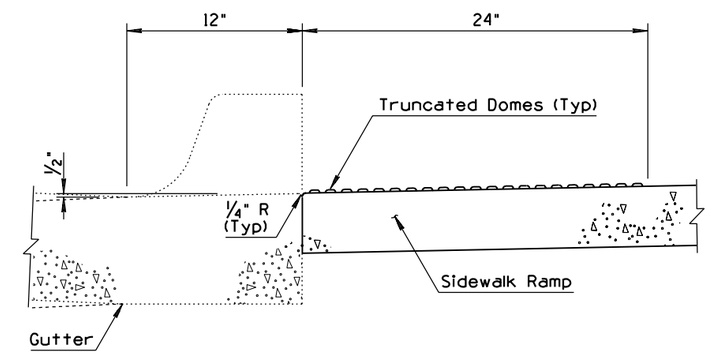

TRUNCATED DOME DETAIL

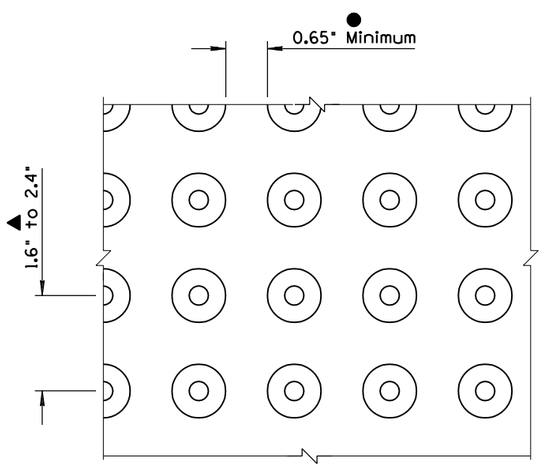

TEXTURE PATTERN DETAIL

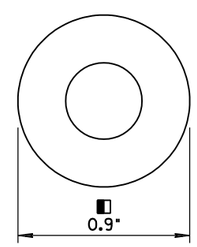

TRUNCATED DOME
DETAIL

DETECTABLE WARNING STRIP DETAIL

APPROVED FOR DESIGN Mary Viparina	STATE OF ARIZONA DEPARTMENT OF TRANSPORTATION ROADWAY STANDARD DRAWINGS	REV. 9/04
APPROVED FOR DISTRIBUTION John Everett	SIDEWALK RAMP DETECTABLE WARNING STRIP	DRAWING NO. 1 C-05.30 Sheet 7 of 7

NO	DESCRIPTION OF REVISIONS	MADE BY	DATE
1	REISSUED STANDARD DRAWING	RLF	9/04
2			
3			
4			

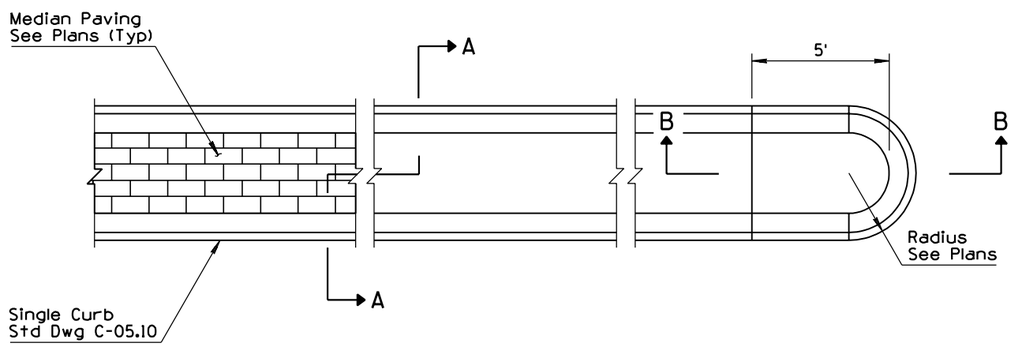

PLAN

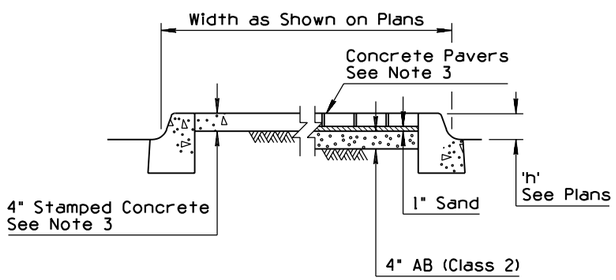

SECTION A-A

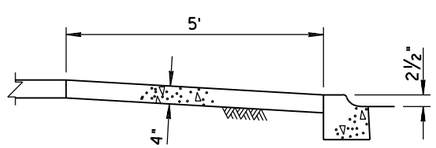

SECTION B-B

GENERAL NOTES

1. Traffic signal foundations, traffic sign foundations and pull boxes for traffic signs and traffic signals shall be installed prior to placement of median paving.
2. See Std Dwgs C-05.10 and C-05.20 for joint requirements.
3. Decorative median paving may be stamped concrete, concrete pavers, or as specified on the project plans.
4. Decorative median paving shall not be placed on a median nose transition or on a median island on a structure.
5. A 4"x6" concrete header shall be used to end decorative paving at locations when concrete sidewalk ramps are not present.
6. Median nose transitions shall not be placed on departure ends of raised medians.
7. See Bridge Group Plans for raised median on structures.
8. Median paving shall be Class B concrete.

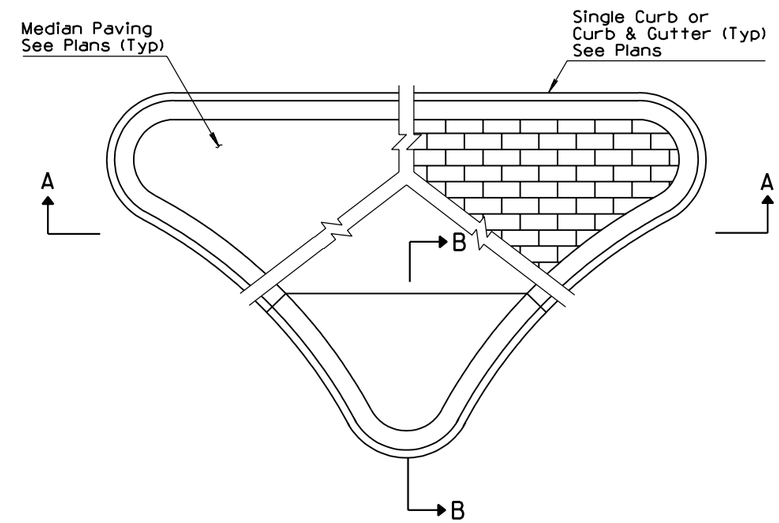

NOSE LAYOUT

APPROVED FOR DESIGN	STATE OF ARIZONA DEPARTMENT OF TRANSPORTATION ROADWAY STANDARD DRAWINGS	REV.
Mary Viparina		9/04
APPROVED FOR DISTRIBUTION	MEDIAN PAVING AND NOSE TAPER	DRAWING NO. 1
Julie Everett		C-05.40

NO	DESCRIPTION OF REVISIONS	MADE BY	DATE
1	MODIFIED GUTTER DEPRESSION VALUE & ADDED NOTE	RLF	9/04
2			
3			
4			

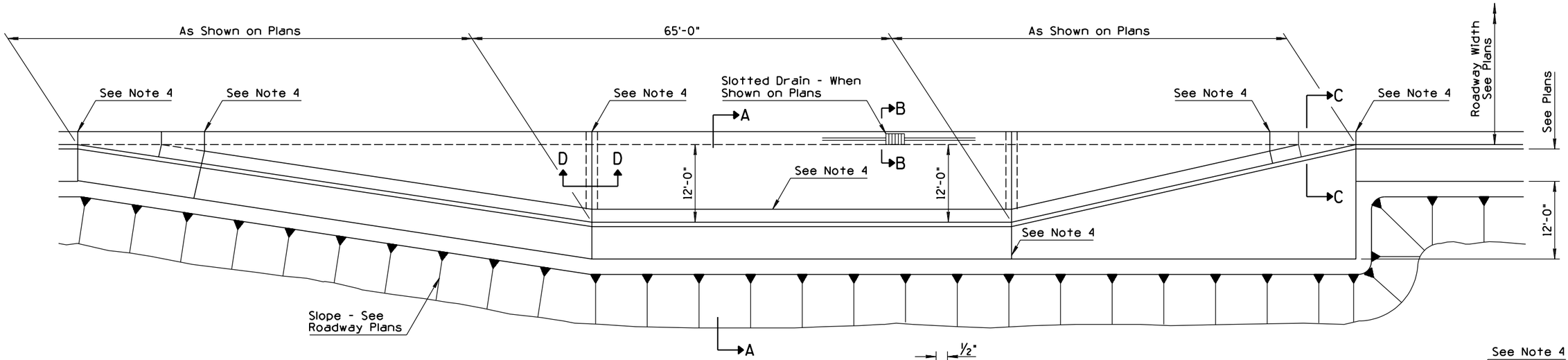

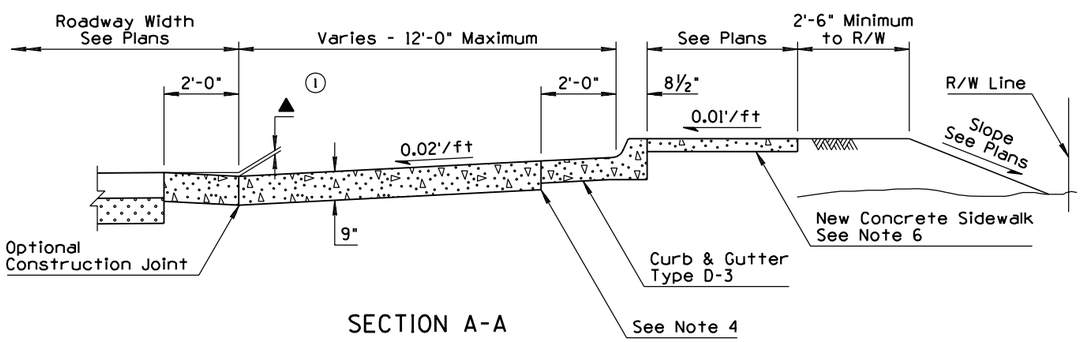

SECTION A-A

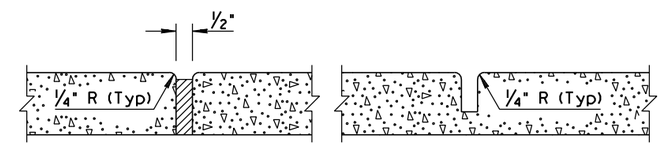

EXPANSION JOINT CONTRACTION JOINT

DETAIL A

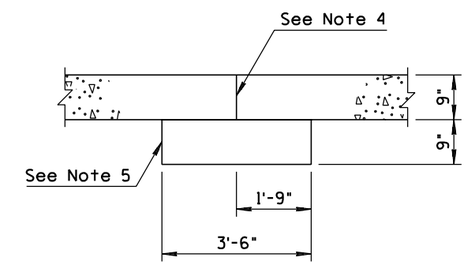

SECTION D-D

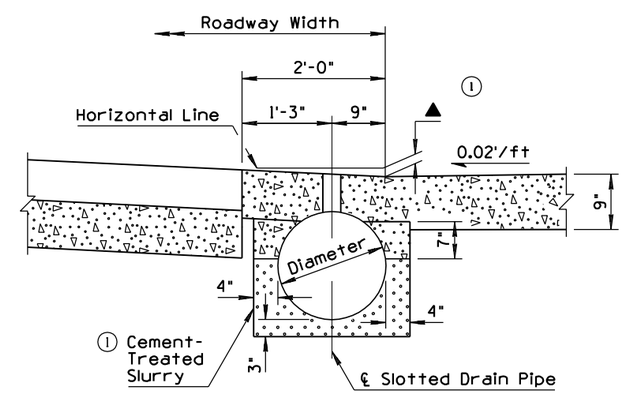

SECTION B-B

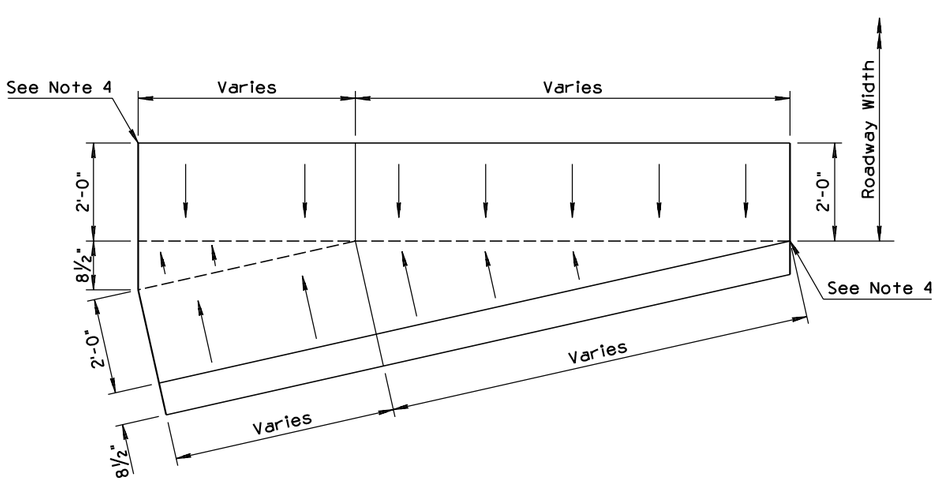

PLAN VIEW OF SECTION C-C

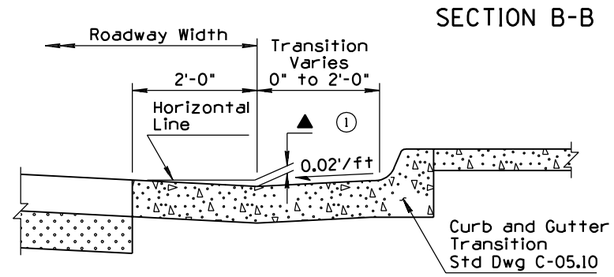

SECTION C-C

GENERAL NOTES

1. The PCCP surfaces within the bus bay area shall be textured transversly. Surface texturing to conform to Std Spec 401.
2. Transverse weakened plane joints shall be constructed at a maximum spacing of 15' and shall align with joints in the concrete curb and gutter.
3. For additional data on slotted drains, see Std Dwg C-13.60.
4. For ½" expansion joint with preformed joint fillers, see Detail A.
5. Concrete pad to be poured separately from concrete bus bay pavement.
6. For sidewalk construction details, see Std Dwg C-05.20.

① ▲ See Plans: match the adjacent gutter depression

APPROVED FOR DESIGN	STATE OF ARIZONA DEPARTMENT OF TRANSPORTATION ROADWAY STANDARD DRAWINGS	REV. 9/04
APPROVED FOR DISTRIBUTION	CONCRETE BUS BAY	DRAWING NO. C-05.50

NO	DESCRIPTION OF REVISIONS	MADE BY	DATE
1	REVISED NOTE & REMOVED PREVIOUS TYPE B TURNOUT	RLF	9/04
2			
3			
4			

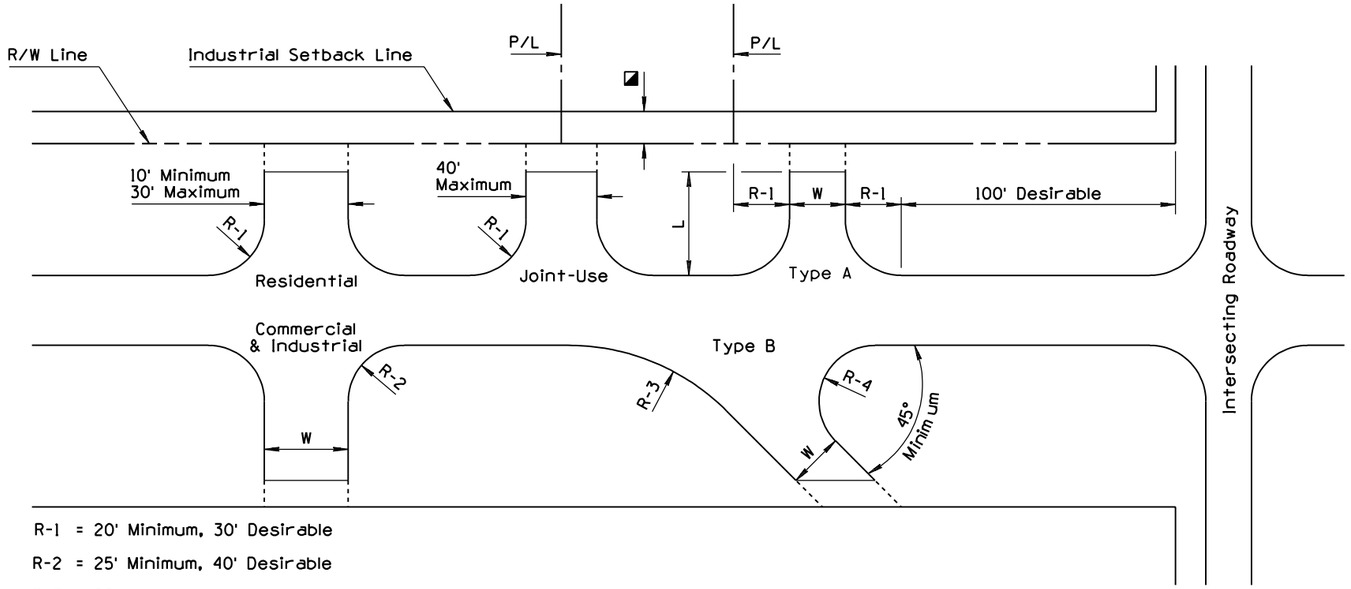

R-1 = 20' Minimum, 30' Desirable

R-2 = 25' Minimum, 40' Desirable

R-3 = 80'

R-4 = 20' Minimum

W = 25' Minimum, 40' Maximum

◪ - See Proper City or County Regulation

RURAL DEVELOPMENTS

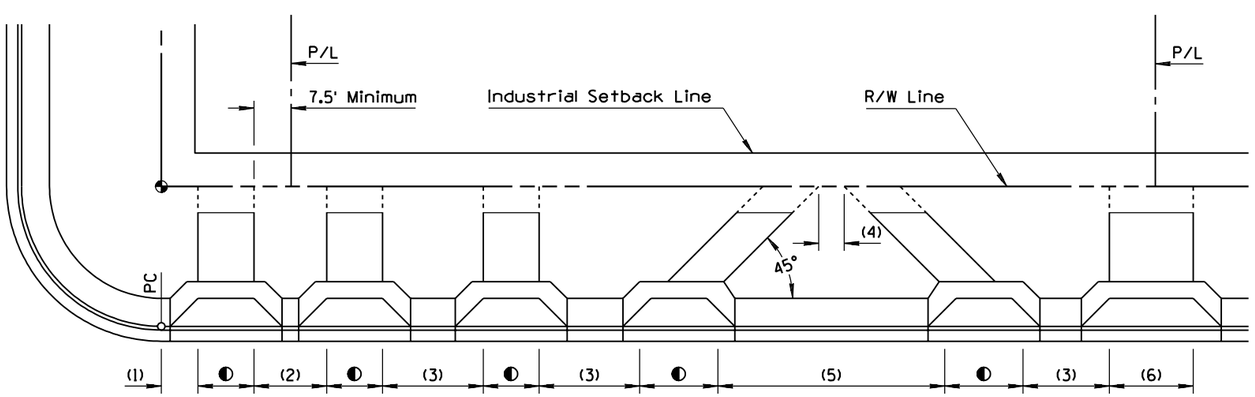

(1) 10' Minimum, 20' Desirable

(2) 15' Minimum

(3) 25' Minimum, 40' Desirable

(4) 40' Minimum

(5) One Way Couplet for Use Only on One Way Roadways

(6) 40' Maximum Joint-Use Driveways

◐ Residential - 10' Minimum, 30' Maximum

◐ Commercial - One Way: 15' Minimum, 30' Maximum
Two Way: 25' Minimum, 40' Maximum

◐ Industrial - 20' Minimum, 40' Maximum

URBAN DEVELOPMENTS

GENERAL NOTES

1. Driveway types:

   Residential - one providing access to a single family residence, to a duplex, or to an apartment building containing five or fewer dwelling units.

   Commercial - one providing access to an office, retail or institutional building or to an apartment building having more than five dwelling units.

   Industrial - one directly serving a substantial number of truck movements to and from loading docks of an industrial facility, warehouse or truck terminal.

(1) 2. Joint-use driveways may become desirable for landowners of adjacent properties to service both properties. If this is the case, only one of the two adjacent landowners need apply for the access permit, but a recorded joint-use easment, signed by all parties invloved, must accompany the application form. The property line can be located anywhere, in reference to the driveway, depending on mutual agreement.

(1) 3. Driveways for high volume traffic generators shall be approved individually by Regional Traffic Engineering or the Traffic Engineering Group.

(1) 4. Driveways with curb returns in urban areas shall be installed only with the approval of Regional Traffic Engineering or the Traffic Engineering Group.

5. Driveways and depressed curbs shall be located as noted on plans or as directed by the Engineer.

6. Drainage structures shall be provided under driveways where necessary.

7. Dimensions indicated as minimum shall be avoided whenever possible in favor of those indicated as desirable.

(1) 8. The Type "A" turnout is the preferable turnout design. Type "B" shall only be used when absolutely necessary.

9. Paved turnouts & plan notations will be W X L, surface material, type and standard. Example: 20' X 30' ACTO, Type A, Std Dwg C-06.10. Show radius (R) graphically.

10. Construction of curb, gutter, sidewalk and drainage facilities in urban areas by the permittee along that portion of the highway frontage under permit application, may be a stipulation of the permit approval if there appears to be reasonable need.

11. Excavation or embankment for turnouts shall be included in quantities for main roadways.

12. Base material shall be the same as that shown for main roadway, unless otherwise noted.

13. Desirable sideslope for rural turnouts is 6:1.

APPROVED FOR DESIGN	STATE OF ARIZONA DEPARTMENT OF TRANSPORTATION ROADWAY STANDARD DRAWINGS	REV.
		9/04
APPROVED FOR DISTRIBUTION	DRIVEWAY & TURNOUT LAYOUTS	DRAWING NO.
		C-06.10 Sheet 1 of 2

NO	DESCRIPTION OF REVISIONS	MADE BY	DATE
1	ROTATED DRIVEWAY BEYOND SIDEWALK	PNB	10/95
2	ADDED NOTE	PNB	10/95
3	MODIFIED TITLE	BAF	8/98
4	ADDED DEPRESSED CURB & GUTTER CALLOUT	RLF	4/04

GENERAL NOTES

1. Grade as shown on plans or as negotiated between property owner and Engineer.
2. When field conditions require modifications to plans, contact design engineer for assistance.
3. See Sheet 1 of 2 for all other General Notes.

◑ Break angle greater than 6% requires a vertical curve, L=10' minimum. Vertical curve shall not encroach on roadway or sidewalk.

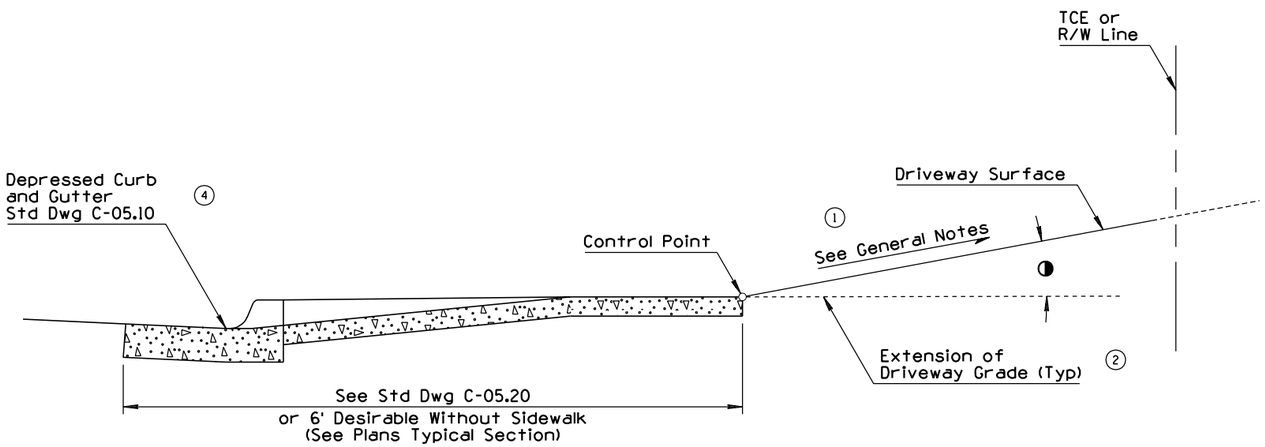

URBAN CROSS SECTION
(UP GRADE)

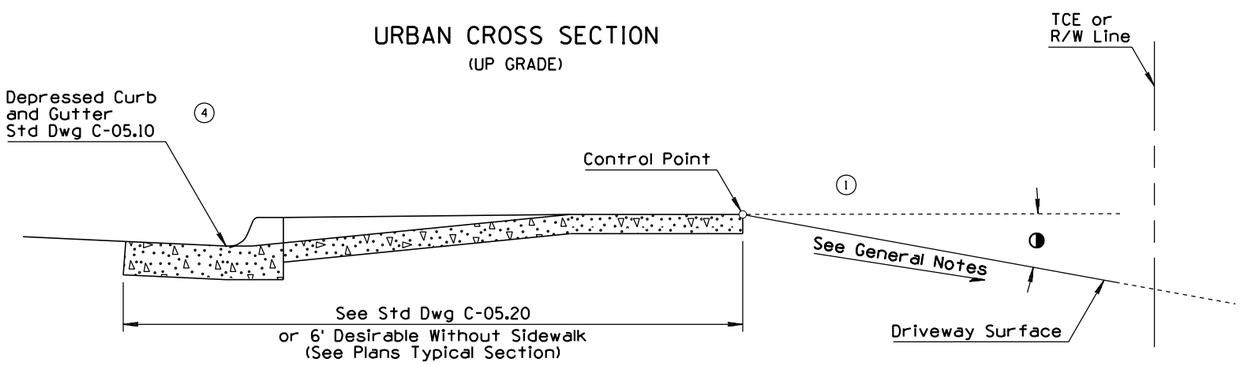

URBAN CROSS SECTION
(DOWN GRADE)

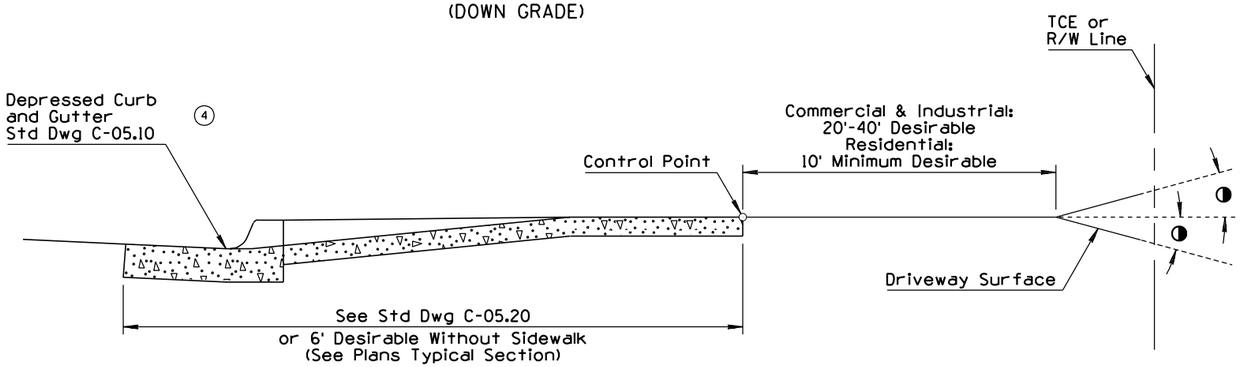

DESIRABLE URBAN CROSS SECTION

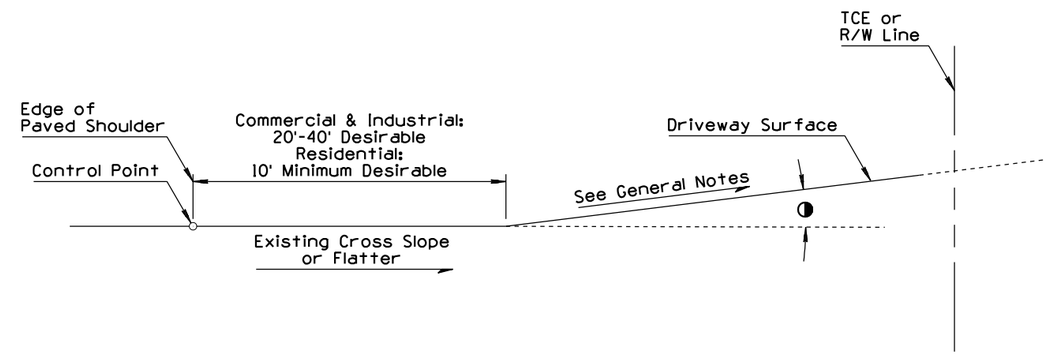

3 RURAL CROSS SECTION
(UP GRADE)

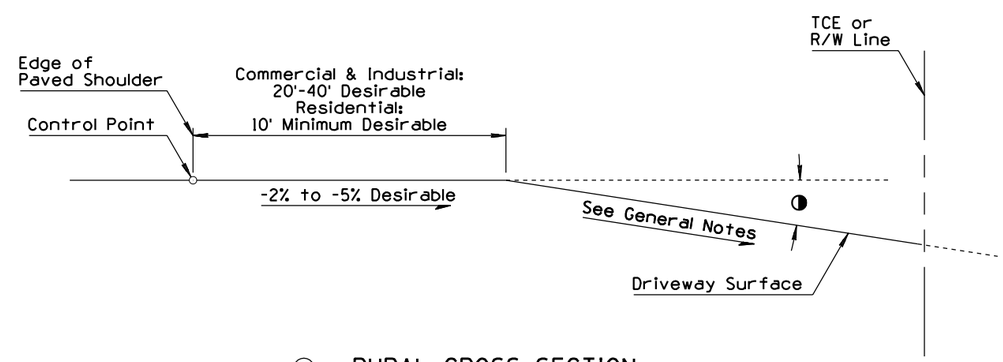

3 RURAL CROSS SECTION
(DOWN GRADE)

APPROVED FOR DESIGN	STATE OF ARIZONA DEPARTMENT OF TRANSPORTATION ROADWAY STANDARD DRAWINGS	REV.
Mary Viparina		8/98
APPROVED FOR DISTRIBUTION	DRIVEWAY & TURNOUT LAYOUTS	DRAWING NO.
		C-06.10
		Sheet 2 of 2

NO	DESCRIPTION OF REVISIONS	MADE BY	DATE
1	ADDED GENERAL NOTES 3, 4 & K JOINT DETAIL	RLF	9/04
2	REVISED DIMENSIONS FROM 9" TO 12"	RLF	9/04
3	ADDED DEFINITION FOR 'PE'	RLF	9/04
4			

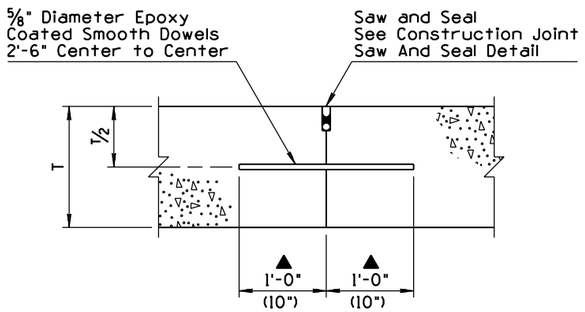

LONGITUDINAL CONSTRUCTION JOINT
LC Joint

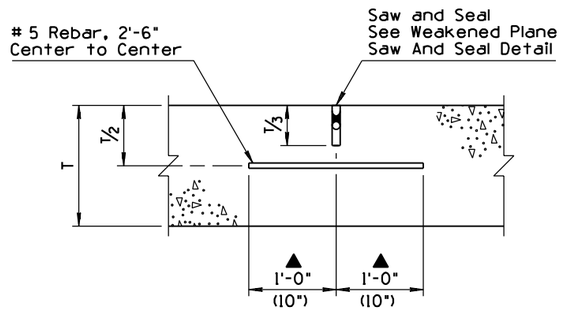

LONGITUDINAL WEAKENED PLANE JOINT
LWP Joint

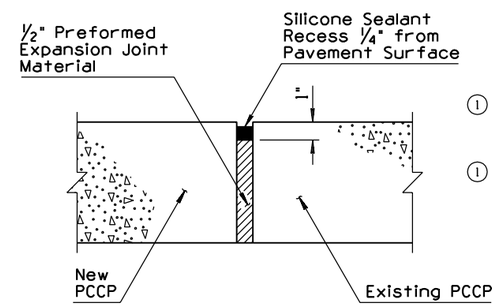

EXPANSION JOINT
H Joint

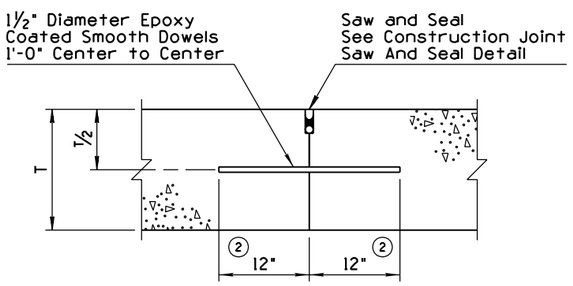

TRANSVERSE CONSTRUCTION JOINT
TC Joint
Non-Skewed & Skewed Joints

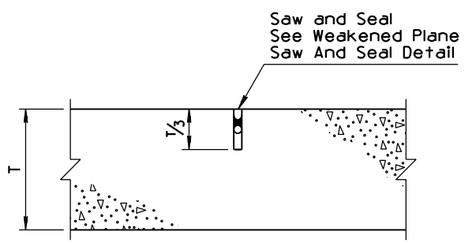

TRANSVERSE WEAKENED PLANE JOINT
TWP Joint
W/O Load Transfer Dowel Assemblies

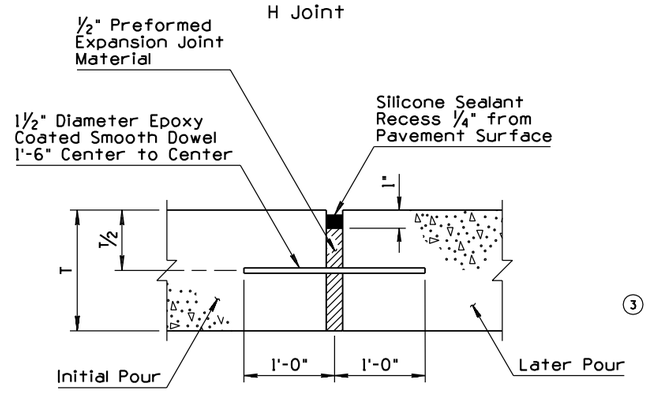

EXPANSION JOINT
E Joint

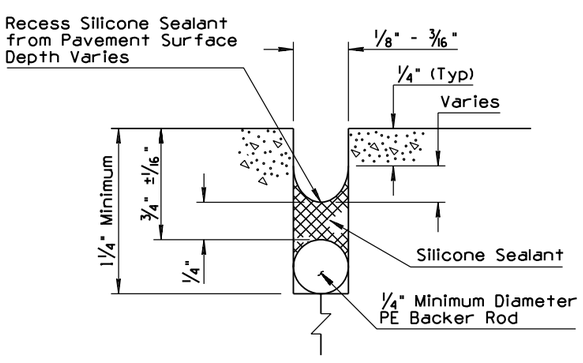

CONSTRUCTION JOINT
SAW AND SEAL DETAIL

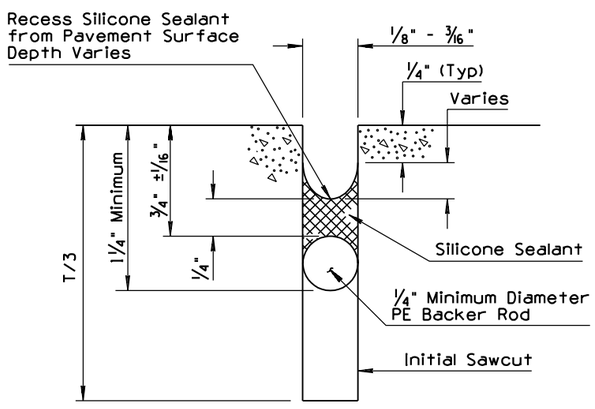

WEAKENED PLANE JOINT
SAW AND SEAL DETAIL

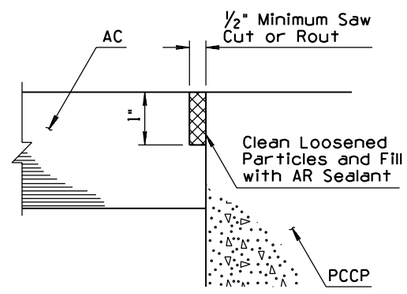

AC/PCCP EDGE SEAL JOINT
S Joint
(Where Specified on Plans)

GENERAL NOTES

▲ 1. When load transfer dowel assemblies are required, use dimensions shown in ( )'s. See Assembly Placement And Edge Clearance Detail, Std Dwg C-07.02.

2. In slip form type pavement construction, LWP joints shall be used. In fixed form construction either LWP or LC joints may be used.

1 3. K joints shall be constructed around the complete perimeter of miscellaneous structures, or as directed by the Engineer.

1 4. Miscellaneous structures include, but are not limited to, catch basins, sign structure foundations, piers, abutments, barrier transitions, slotted drains and other concrete facilities, constructed within the right-of-way.

JOINT ABBREVIATIONS

LWP	-	Longitudinal Weakened Plane Joint
TWP	-	Transverse Weakened Plane Joint
LC	-	Longitudinal Construction Joint
TC	-	Transverse Construction Joint
E, H, K	-	Expansion Joints
S	-	AC/PCCP Edge Seal Joint
T	-	PCCP Thickness
3 PE	-	Polythylene

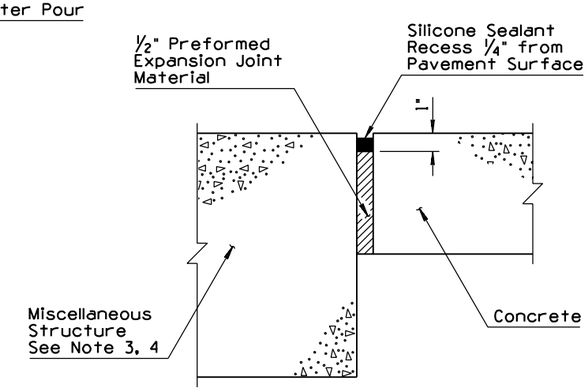

EXPANSION JOINT
K Joint (See Notes 3 & 4)
1

APPROVED FOR DESIGN	STATE OF ARIZONA DEPARTMENT OF TRANSPORTATION ROADWAY STANDARD DRAWINGS	REV.
APPROVED FOR DISTRIBUTION	PCCP JOINTS	DRAWING NO. C-07.01 Sheet 1 of 2

NO	DESCRIPTION OF REVISIONS	MADE BY	DATE
1	DELETED GENERAL NOTE 2	RLF	9/04
2	REVISED GENERAL NOTE	RLF	9/04
3	ADDED JOINT DETAIL	RLF	9/04
4			

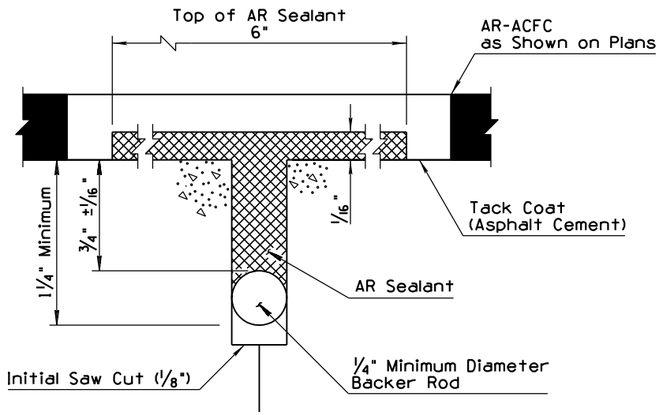

LONGITUDINAL CONSTRUCTION ③
JOINT DETAIL
(WITH AR-ACFC)

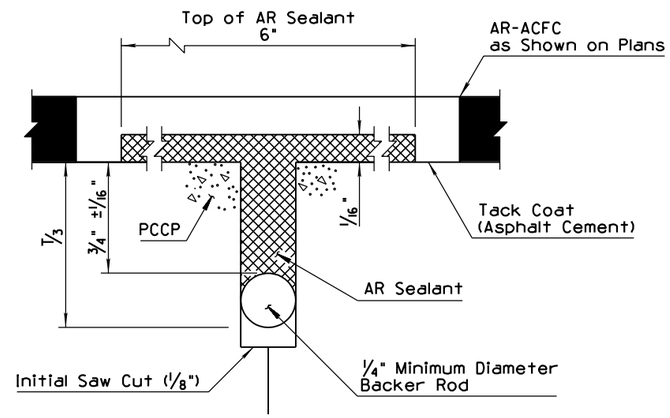

WEAKENED PLANE ③
JOINT DETAIL
(WITH AR-ACFC)

GENERAL NOTES

② 1. Joints are generally shown with pavement sloping toward the joint.

①

JOINT ABBREVIATIONS

G - Gutter Joint
T - PCCP Thickness
D - Gutter Thickness
B - Barrier Joint

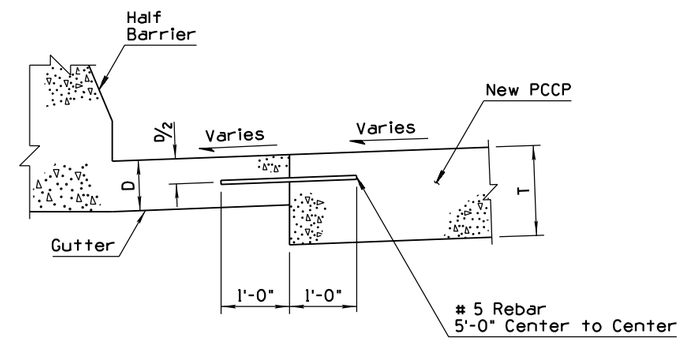

HALF BARRIER JOINT
B Joint

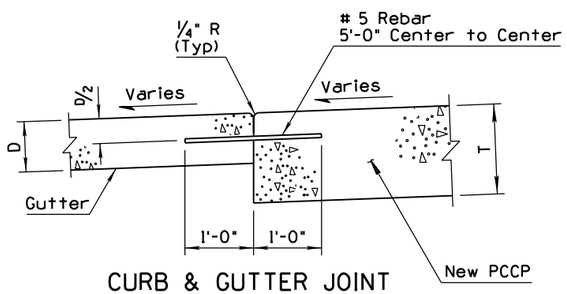

CURB & GUTTER JOINT
G Joint

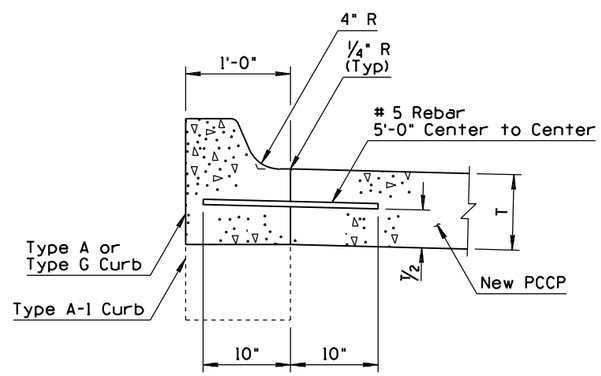

SINGLE CURB JOINT
A Joint

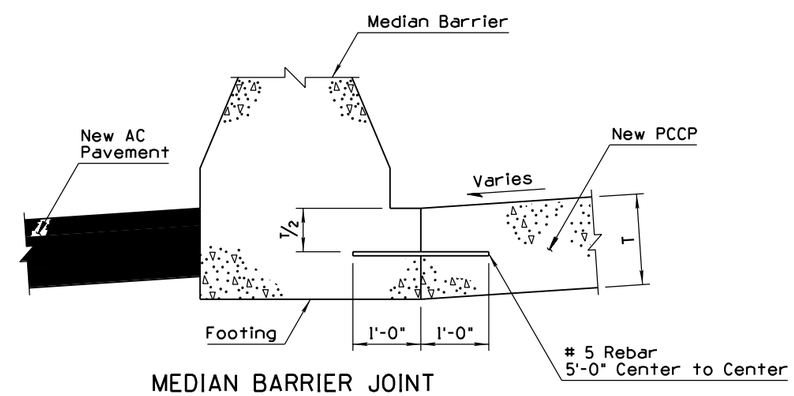

MEDIAN BARRIER JOINT
B Joint
AC Pavement on Back Side of Barrier

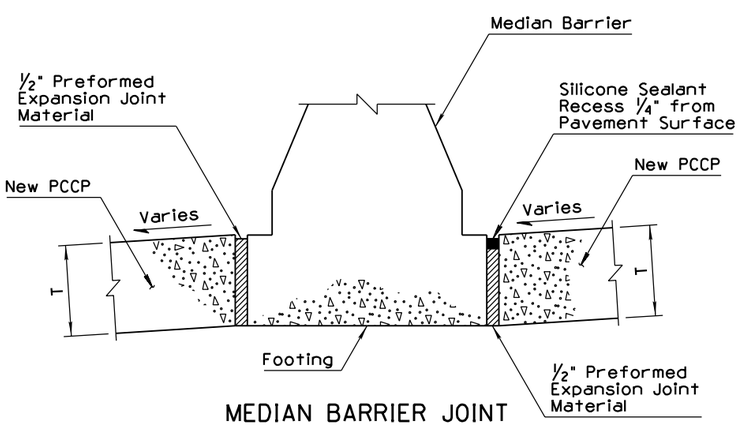

MEDIAN BARRIER JOINT
B Joint
PCCP on Both Sides of Barrier

APPROVED FOR DESIGN	STATE OF ARIZONA DEPARTMENT OF TRANSPORTATION ROADWAY STANDARD DRAWINGS	REV.
Mary Vipauna		9/04
APPROVED FOR DISTRIBUTION	PCCP JOINTS	DRAWING NO.
Julie Everett		C-07.01 Sheet 2 of 2

NO	DESCRIPTION OF REVISIONS	MADE BY	DATE
1	MODIFIED TABLE MEASUREMENT FORMAT	RLF	9/04
2			
3			
4			

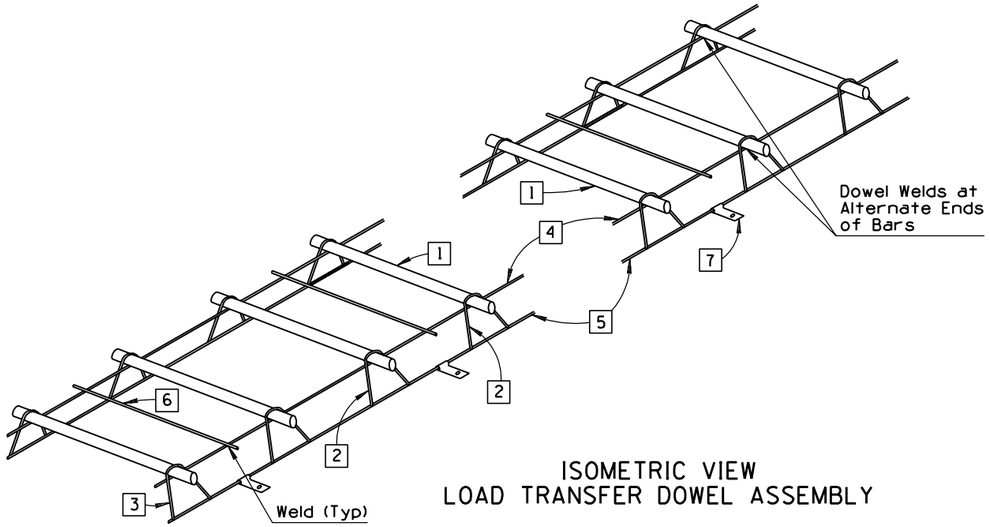

ISOMETRIC VIEW
LOAD TRANSFER DOWEL ASSEMBLY

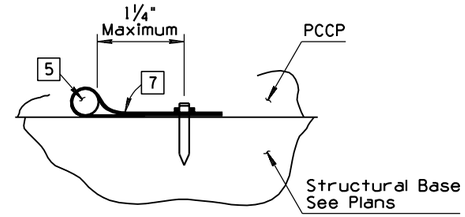

ANCHOR STRAP DETAIL

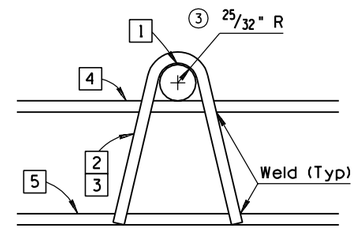

END AND INTERMEDIATE LEG DETAIL

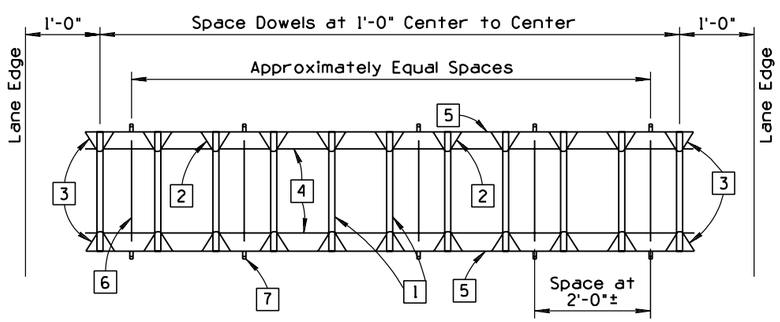

PLAN VIEW
LOAD TRANSFER DOWEL ASSEMBLY

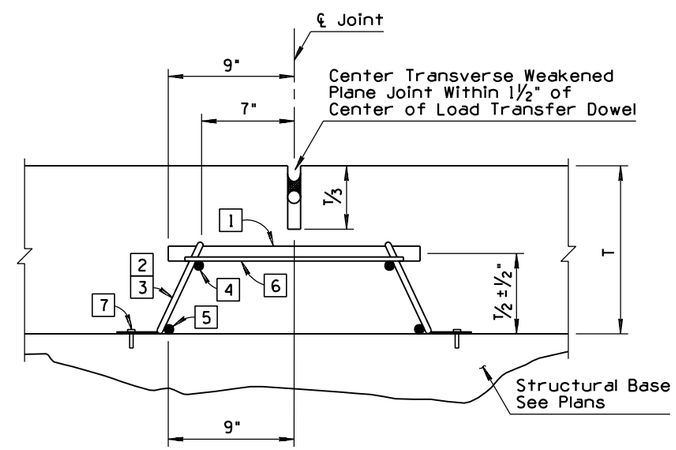

TRANSVERSE WEAKENED PLANE JOINT WITH
LOAD TRANSFER DOWEL ASSEMBLY

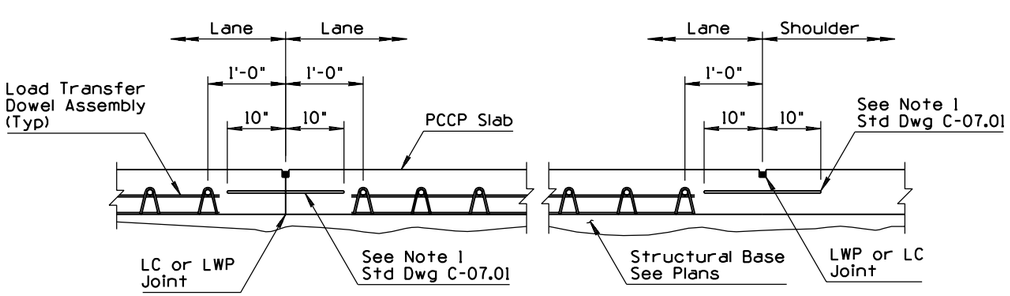

ASSEMBLY PLACEMENT AND EDGE CLEARANCE DETAIL

GENERAL NOTES

1. Load transfer dowel assemblies shall be used with non-skewed PCCP joints.
2. Load transfer dowel assemblies are to be placed at each transverse weakened plane joint on the traveled lanes as shown on the plans.
3. See Std Dwgs C-07.01 through C-07.05 for additional information.
4. See plans or Std Dwgs C-07.03 through C-07.05 for transverse joint spacing.
5. See plans for pavement thickness less than 12" or greater than 14".

Load transfer dowel assembly shall be assembled from the following materials:
(See Quantity Table)

1. Dowel bars - 1½" diameter x 1'-6" plain round bars with coating. See Special Provisions.
2. Intermediate legs - 2 gauge or W-5.5 wire.
3. End legs - 2 gauge or W-5.5 wire.
4. Upper space bar - 2 gauge or W-5.5 wire x ◑ . (See Dimension Table)
5. Lower space bar - 2 gauge or W-5.5 wire x ◑ . (See Dimension Table)
6. Tie bars - W-1.5 wire x 16".
7. Anchor strap - 1"x3" steel strap, 0.079 thick. Place with a 1½" minimum length steel nail for LCB, 4" minimum length steel nail for ACB or AB, 0.145 diameter ASTM A227 Class 1 with ¼" head or washer.

①

QUANTITY TABLE			
Item No	Lane Width (Ft)		
	12	14	16
1	11	13	15
2	18	22	26
3	4	4	4
4	2	2	2
5	2	2	2
6	5	6	7
7	10	12	14

①

DIMENSION TABLE			
	Lane Width (Ft)		
	12	14	16
◑ (Ft-In))	10-4	12-4	14-4

APPROVED FOR DESIGN	STATE OF ARIZONA DEPARTMENT OF TRANSPORTATION ROADWAY STANDARD DRAWINGS	REV. 9/04
APPROVED FOR DISTRIBUTION	LOAD TRANSFER DOWEL ASSEMBLY	DRAWING NO. C-07.02

NO	DESCRIPTION OF REVISIONS	MADE BY	DATE
1	ADDED GENERAL NOTES 1 & 9	RLF	9/04
2	REVISED JOINT ANGLE FOR CURB & GUTTER	RLF	9/04
3	REVISED TITLE	RLF	9/04
4			

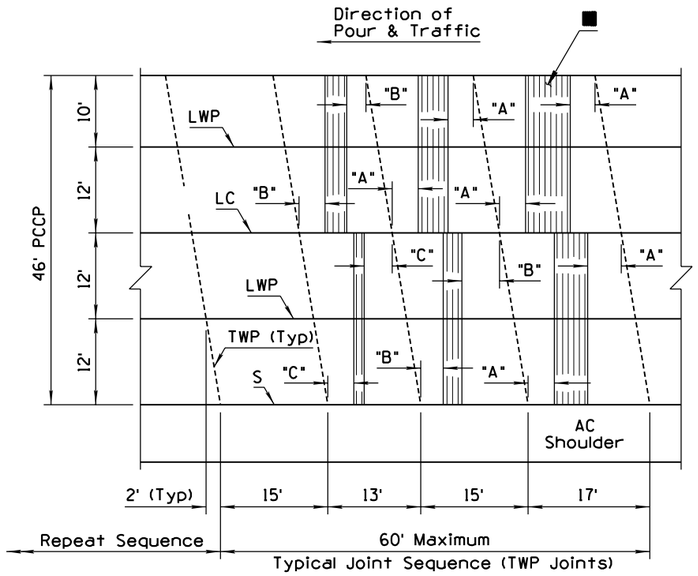

PLAN
46' PCCP

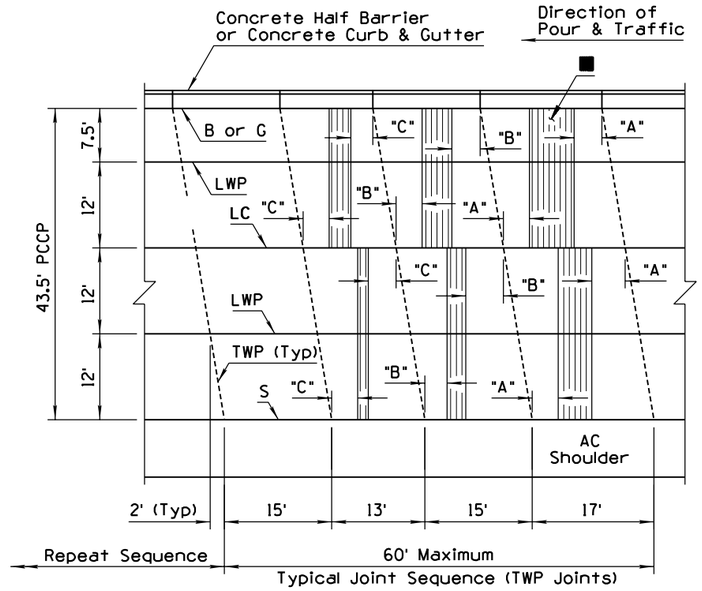

PLAN ②
43.5' PCCP

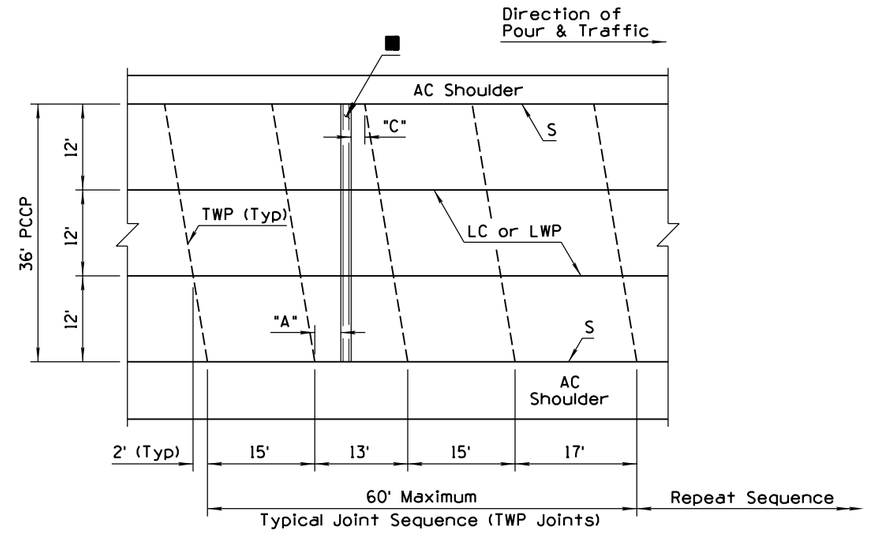

PLAN
36' PCCP

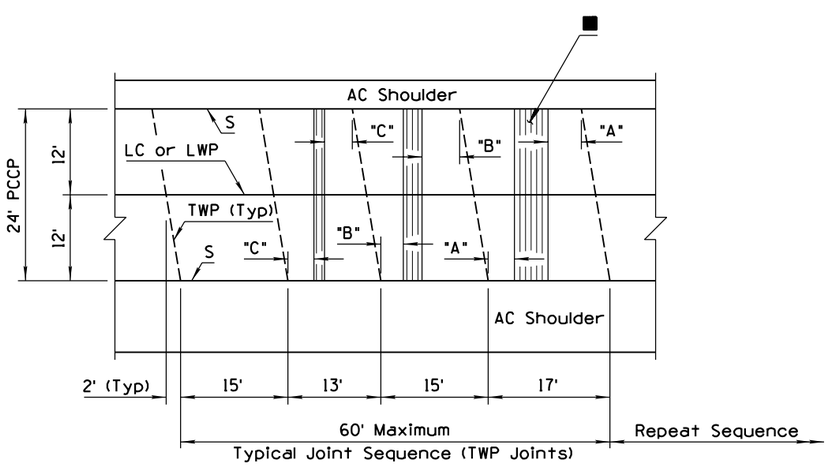

PLAN
24' PCCP

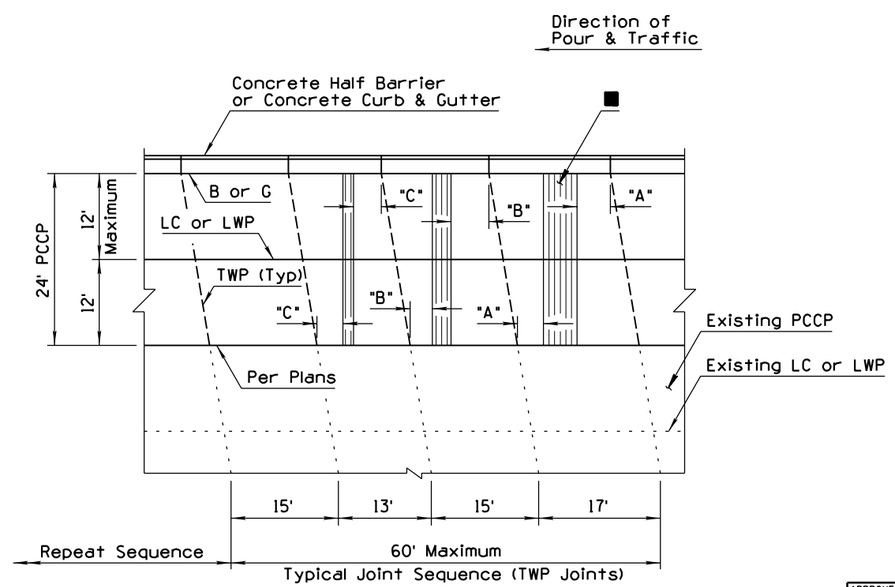

PLAN ②
24' PCCP
(WIDENING)

GENERAL NOTES

① 1. LC and LWP joint locations shown are typical. The actual paving pour plan with joint locations shall be based upon the project paving plan submitted by the contractor and approved by the Engineer in accordance with Subsection 401-3.01 of the Standard Specifications.

2. Skewed PCCP joints shall be used when load transfer dowel assemblies are not required.

3. "A" shall equal 4' minimum (Typ)
"B" shall equal 3' minimum (Typ)
"C" shall equal 2' minimum (Typ)

4. See Std Dwg C-07.01 for PCCP joints and additional notes.

5. All transverse joints shall align with joints in adjacent slabs.

6. See Std Dwg C-05.10 for curb and gutter joint requirements.

7. At intersection of side roads or streets, joints shall be placed to give the intersection a symmetrical appearance while conforming to the cross section of the intersecting road or street.

8. The rebars in the LWP & LC joints shall be placed no greater than 1'-3" from the TC joint.

① 9. LC and LWP joints shall be located on the edge of traffic lanes unless otherwise shown on the project plans.

■ Transverse Construction Joint (TC) Allowable Limits (Typ)

APPROVED FOR DESIGN	STATE OF ARIZONA DEPARTMENT OF TRANSPORTATION ROADWAY STANDARD DRAWINGS	REV.
Mary Vipanina		9/04
APPROVED FOR DISTRIBUTION	PCCP JOINT LOCATIONS MAINLINE SKEWED JOINTS ③	DRAWING NO. C-07.03
		Sheet 1 of 8

NO	DESCRIPTION OF REVISIONS	MADE BY	DATE
1	ADDED GENERAL NOTES 1 & 9	RLF	9/04
2	REVISED JOINT ANGLE FOR CURB & GUTTER	RLF	9/04
3	REVISED TITLE	RLF	9/04
4			

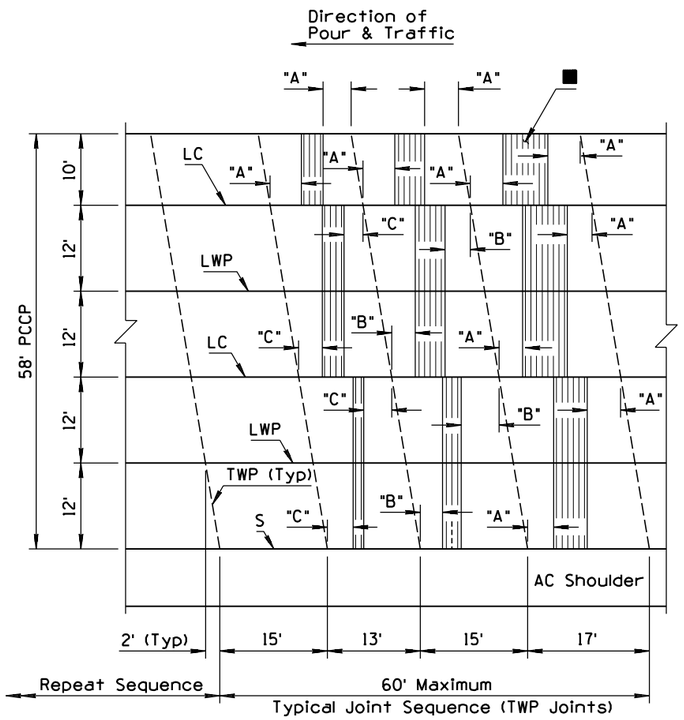

PLAN
58' PCCP

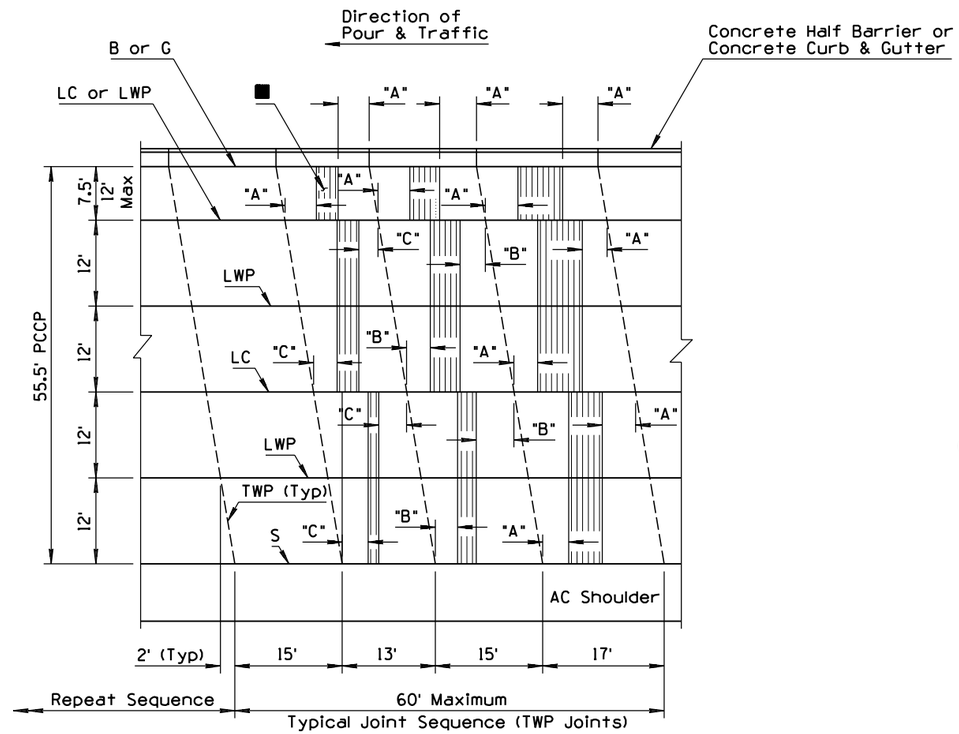

PLAN ②
55.5' PCCP

GENERAL NOTES

① 1. LC and LWP joint locations shown are typical. The actual paving pour plan with joint locations shall be based upon the project paving plan submitted by the contractor and approved by the Engineer in accordance with Subsection 401-3.01 of the Standard Specifications.

2. Skewed PCCP joints shall be used when load transfer dowel assemblies are not required.

3. "A" shall equal 4' minimum (Typ)
"B" shall equal 3' minimum (Typ)
"C" shall equal 2' minimum (Typ)

4. See Std Dwg C-07.01 for PCCP joints and additional notes.

5. All transverse joints shall align with joints in adjacent slabs.

6. See Std Dwg C-05.10 for curb and gutter joint requirements.

7. At intersection of side roads or streets, joints shall be placed to give the intersection a symmetrical appearance while conforming to the cross section of the intersecting road or street.

8. The rebars in the LWP & LC joints shall be placed no greater than 1'-3" from the TC joint.

① 9. LC and LWP joints shall be located on the edge of traffic lanes unless otherwise shown on the project plans.

■ Transverse Construction Joint (TC) Allowable Limits (Typ)

APPROVED FOR DESIGN	STATE OF ARIZONA DEPARTMENT OF TRANSPORTATION ROADWAY STANDARD DRAWINGS	REV.
Mary Viparina		9/04
APPROVED FOR DISTRIBUTION	PCCP JOINT LOCATIONS MAINLINE SKEWED JOINTS ③	DRAWING NO.
		C-07.03 Sheet 2 of 8

NO	DESCRIPTION OF REVISIONS	MADE BY	DATE
1	ADDED GENERAL NOTES 1 & 9	RLF	9/04
2	REVISED JOINT ANGLE FOR CURB & GUTTER	RLF	9/04
3	REVISED TITLE	RLF	9/04
4			

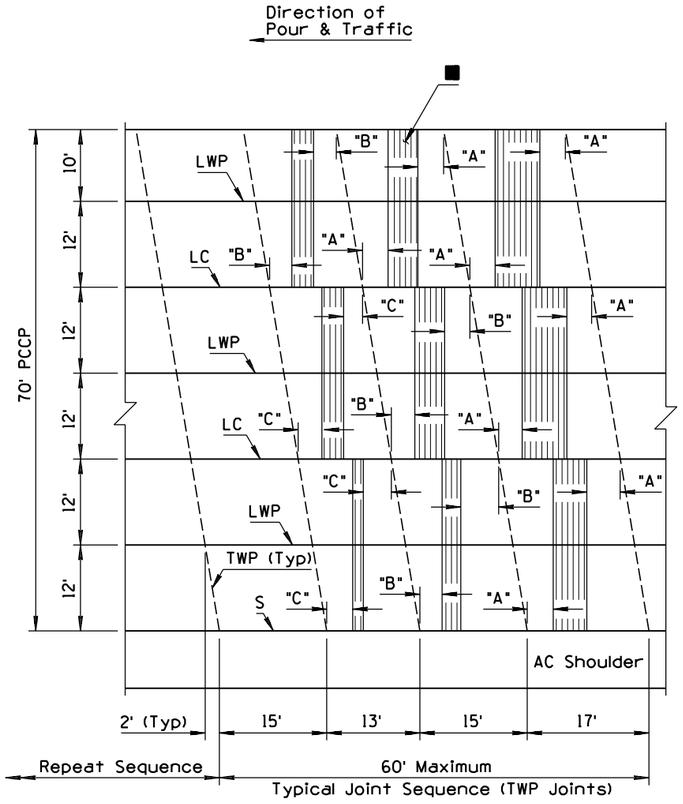

PLAN
70' PCCP

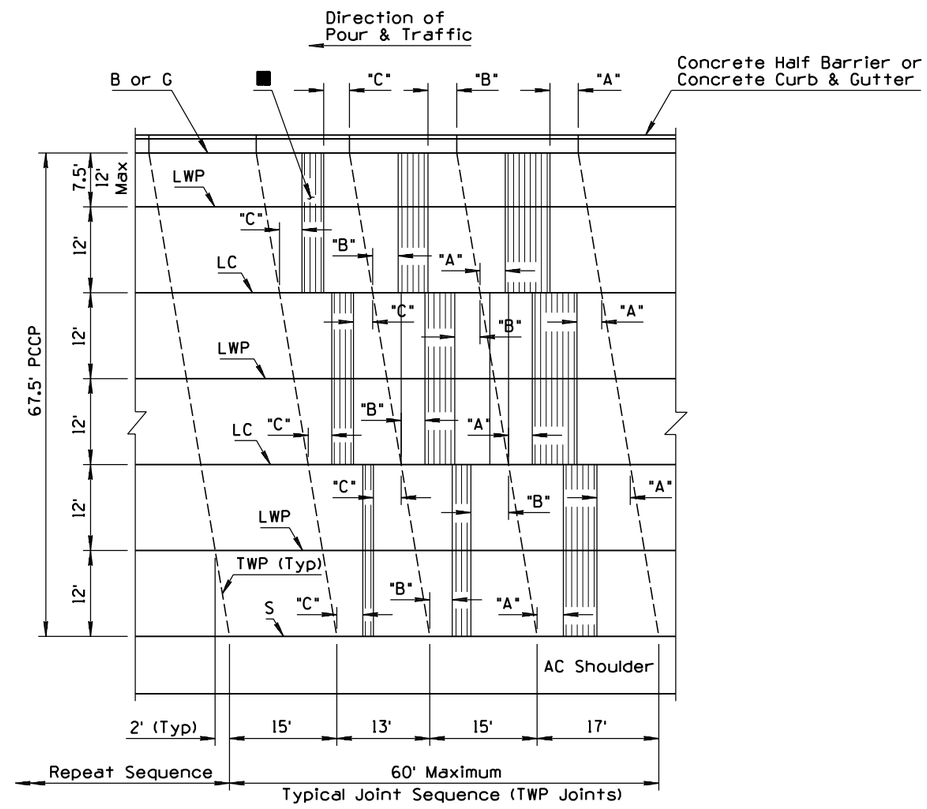

2

PLAN
67.5' PCCP

GENERAL NOTES

1. LC and LWP joint locations shown are typical. The actual paving pour plan with joint locations shall be based upon the project paving plan submitted by the contractor and approved by the Engineer in accordance with Subsection 401-3.01 of the Standard Specifications.
2. Skewed PCCP joints shall be used when load transfer dowel assemblies are not required.
3. "A" shall equal 4' minimum (Typ)
   "B" shall equal 3' minimum (Typ)
   "C" shall equal 2' minimum (Typ)
4. See Std Dwg C-07.01 for PCCP joints and additional notes.
5. All transverse joints shall align with joints in adjacent slabs.
6. See Std Dwg C-05.10 for curb and gutter joint requirements.
7. At intersection of side roads or streets, joints shall be placed to give the intersection a symmetrical appearance while conforming to the cross section of the intersecting road or street.
8. The rebars in the LWP & LC joints shall be placed no greater than 1'-3" from the TC joint.
9. LC and LWP joints shall be located on the edge of traffic lanes unless otherwise shown on the project plans.

■ Transverse Construction Joint (TC) Allowable Limits (Typ)

APPROVED FOR DESIGN	STATE OF ARIZONA DEPARTMENT OF TRANSPORTATION ROADWAY STANDARD DRAWINGS	REV. 9/04
APPROVED FOR DISTRIBUTION	PCCP JOINT LOCATIONS MAINLINE SKEWED JOINTS 3	DRAWING NO. C-07.03 Sheet 3 of 8

NO	DESCRIPTION OF REVISIONS	MADE BY	DATE
1	ADDED GENERAL NOTES 1 & 9	RLF	9/04
2	REVISED JOINT ANGLE FOR CURB & GUTTER	RLF	9/04
3	REVISED TITLE	RLF	9/04
4			

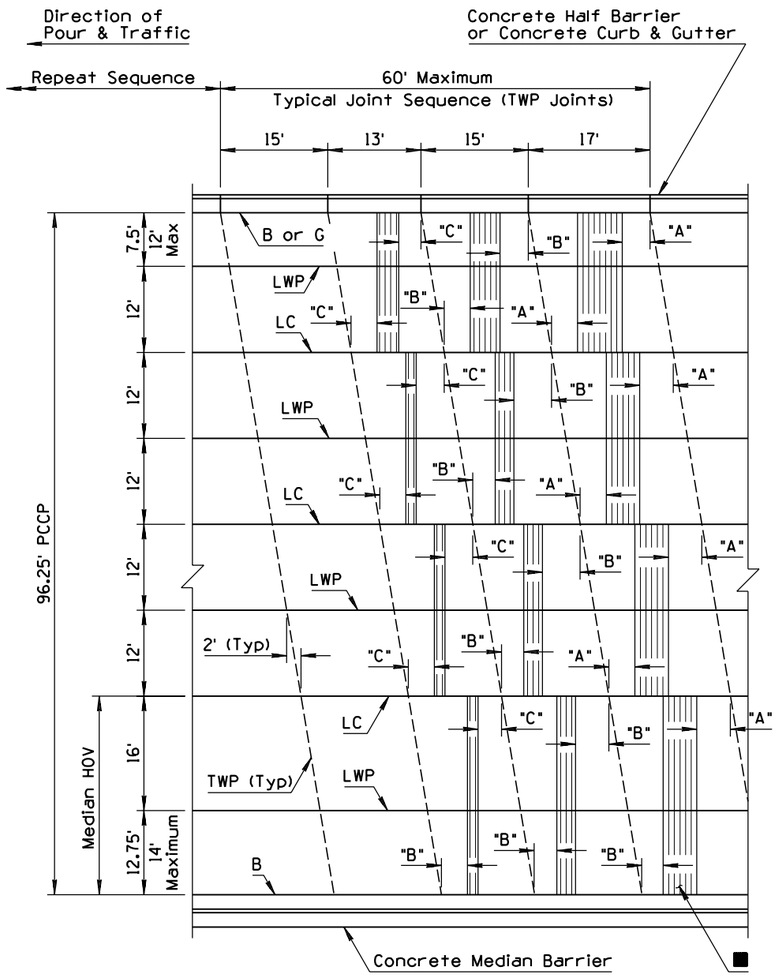

PLAN ②
96.25' PCCP

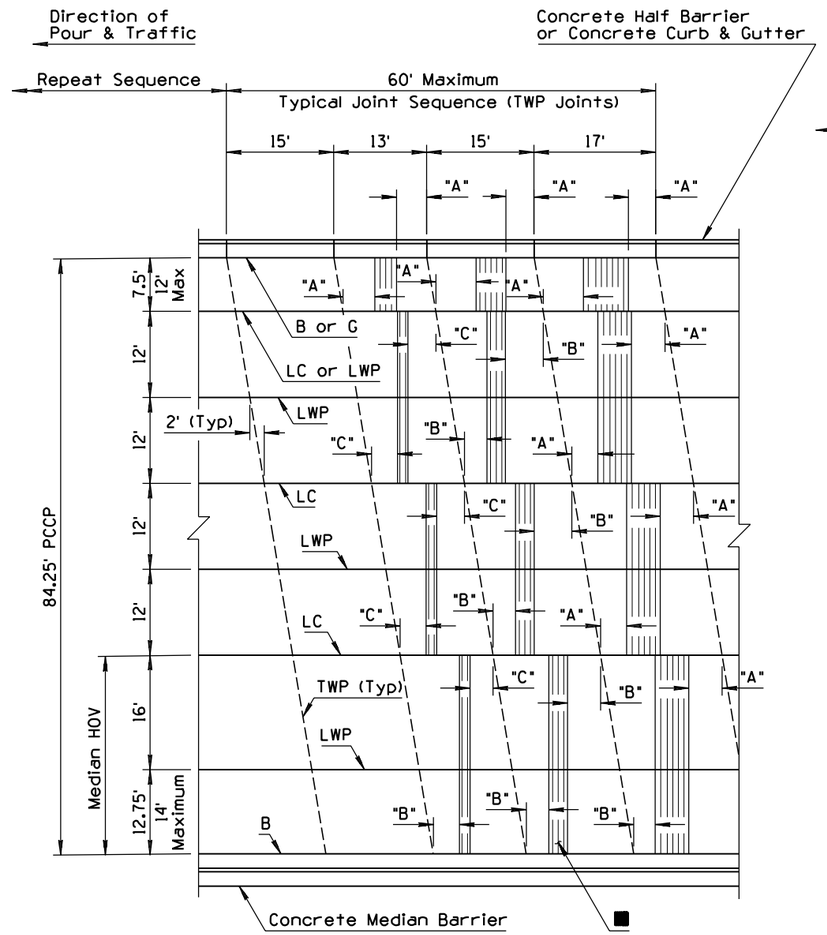

PLAN ②
84.25' PCCP

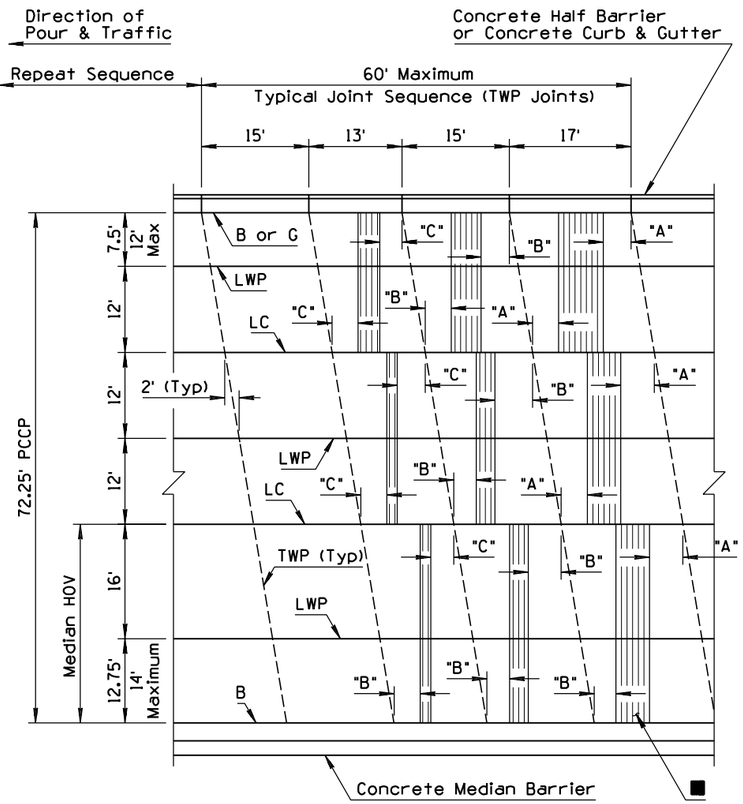

PLAN ②
72.25' PCCP

GENERAL NOTES

① 1. LC and LWP joint locations shown are typical. The actual paving pour plan with joint locations shall be based upon the project paving plan submitted by the contractor and approved by the Engineer in accordance with Subsection 401-3.01 of the Standard Specifications.

2. Skewed PCCP joints shall be used when load transfer dowel assemblies are not required.

3. "A" shall equal 4' minimum (Typ)
"B" shall equal 3' minimum (Typ)
"C" shall equal 2' minimum (Typ)

4. See Std Dwg C-07.01 for PCCP joints and additional notes.

5. All transverse joints shall align with joints in adjacent slabs.

6. See Std Dwg C-05.10 for curb and gutter joint requirements.

7. At intersection of side roads or streets, joints shall be placed to give the intersection a symmetrical appearance while conforming to the cross section of the intersecting road or street.

8. The rebars in the LWP & LC joints shall be placed no greater than 1'-3" from the TC joint.

① 9. LC and LWP joints shall be located on the edge of traffic lanes unless otherwise shown on the project plans.

■ Transverse Construction Joint (TC) Allowable Limits (Typ)

APPROVED FOR DESIGN	STATE OF ARIZONA DEPARTMENT OF TRANSPORTATION ROADWAY STANDARD DRAWINGS	REV. 9/04
APPROVED FOR DISTRIBUTION	PCCP JOINT LOCATIONS MAINLINE SKEWED JOINTS ③	DRAWING NO. C-07.03 Sheet 4 of 8

NO	DESCRIPTION OF REVISIONS	MADE BY	DATE
1	ADDED GENERAL NOTES 1 & 9	RLF	9/04
2	REVISED TITLE	RLF	9/04
3			
4			

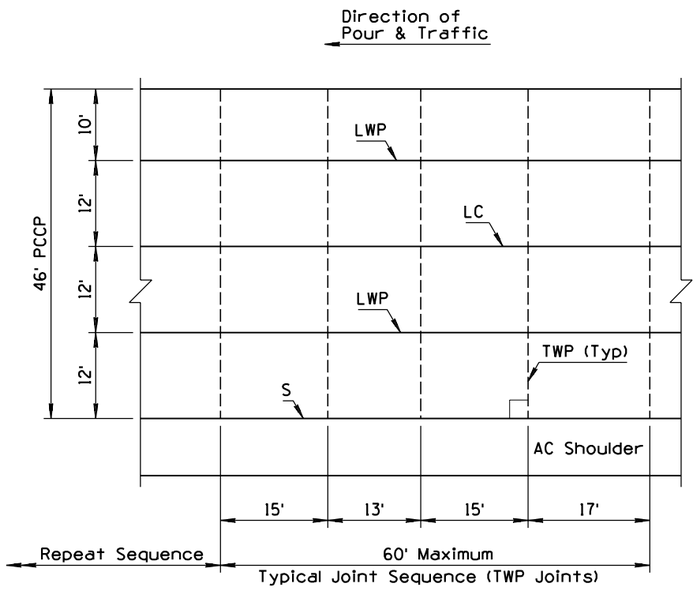

PLAN
46' PCCP

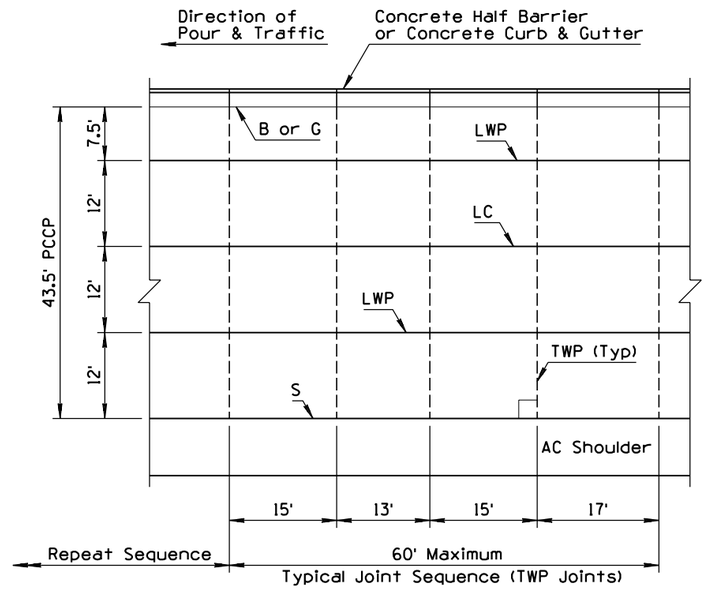

PLAN
43.5' PCCP

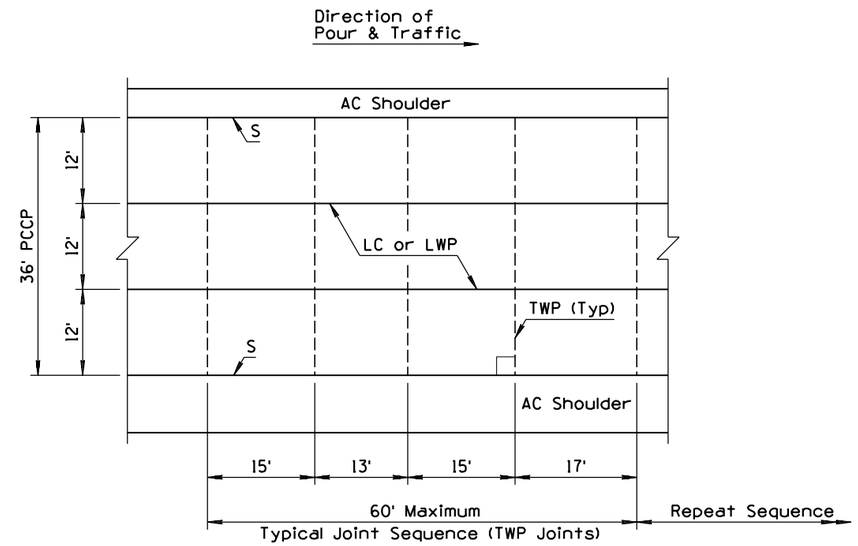

PLAN
36' PCCP

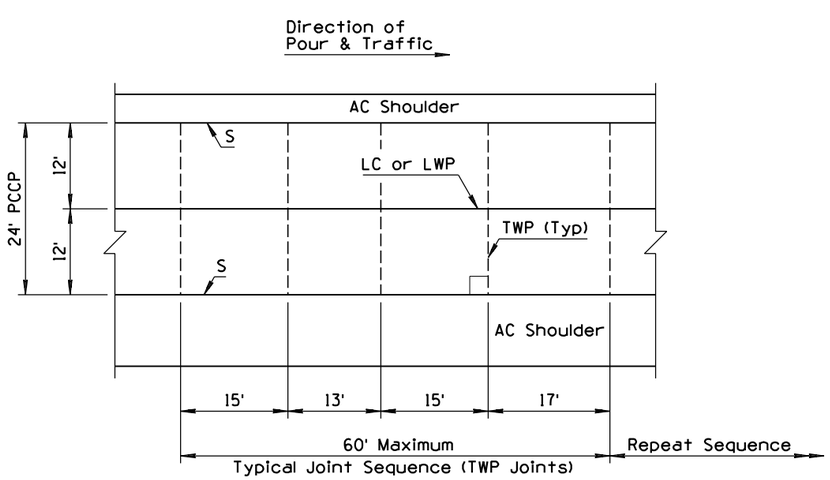

PLAN
24' PCCP

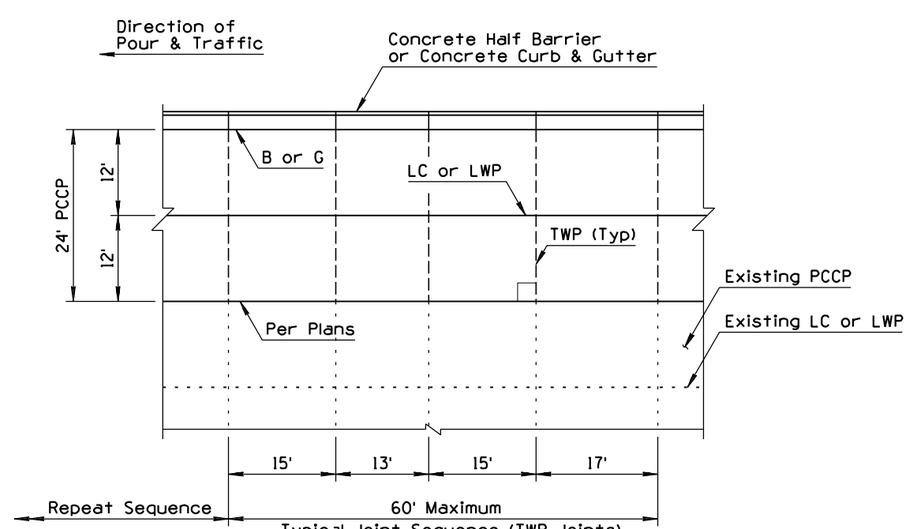

PLAN
24' PCCP
(WIDENING)

GENERAL NOTES

(1) 1. LC and LWP joint locations shown are typical. The actual paving pour plan with joint locations shall be based upon the project paving plan submitted by the contractor and approved by the Engineer in accordance with Subsection 401-3.01 of the Standard Specifications.

2. Non-skewed PCCP joints shall be used with load transfer dowel assemblies.

3. See Std Dwg C-07.01 for PCCP joints and additional notes.

4. All transverse joints shall align with joints in adjacent slabs and are perpendicular (90°) to the longitudinal joints.

5. At intersection of side roads or streets, joints shall be placed to give the intersection a symmetrical appearance while conforming to the cross section of the intersecting road or street.

6. See Std Dwg C-05.10 for curb and gutter joint requirements.

7. The rebars in the LWP & LC joints shall be placed no greater than 1'-3" from the TC joint.

8. Transverse weakened plane joint shall be constructed at least 6'-0" from a transverse construction joint.

(1) 9. LC and LWP joints shall be located on the edge of traffic lanes unless otherwise shown on the project plans.

APPROVED FOR DESIGN	STATE OF ARIZONA DEPARTMENT OF TRANSPORTATION ROADWAY STANDARD DRAWINGS	REV.
		9/04
APPROVED FOR DISTRIBUTION	PCCP JOINT LOCATIONS MAINLINE NON-SKEWED JOINTS (2)	DRAWING NO. C-07.03 Sheet 5 of 8

NO	DESCRIPTION OF REVISIONS	MADE BY	DATE
1	ADDED GENERAL NOTES 1 & 9	RLF	9/04
2	REVISED TITLE	RLF	9/04
3			
4			

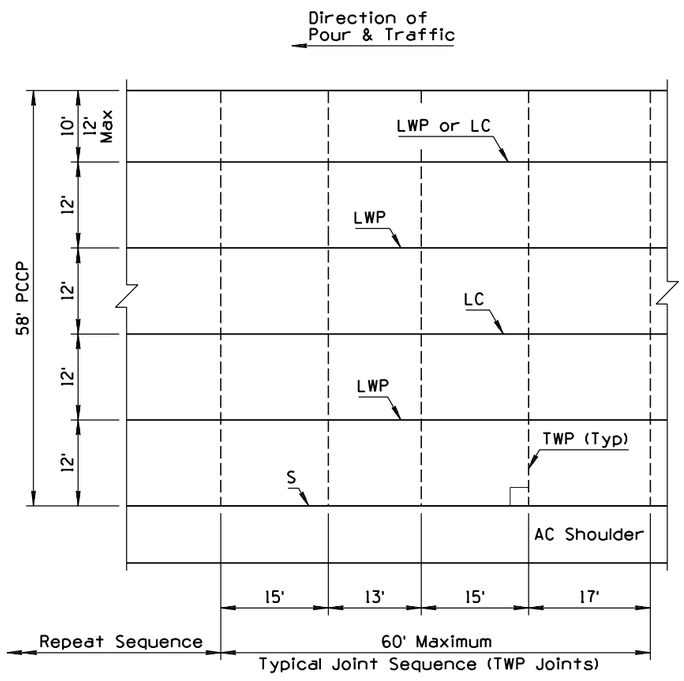

PLAN
58' PCCP

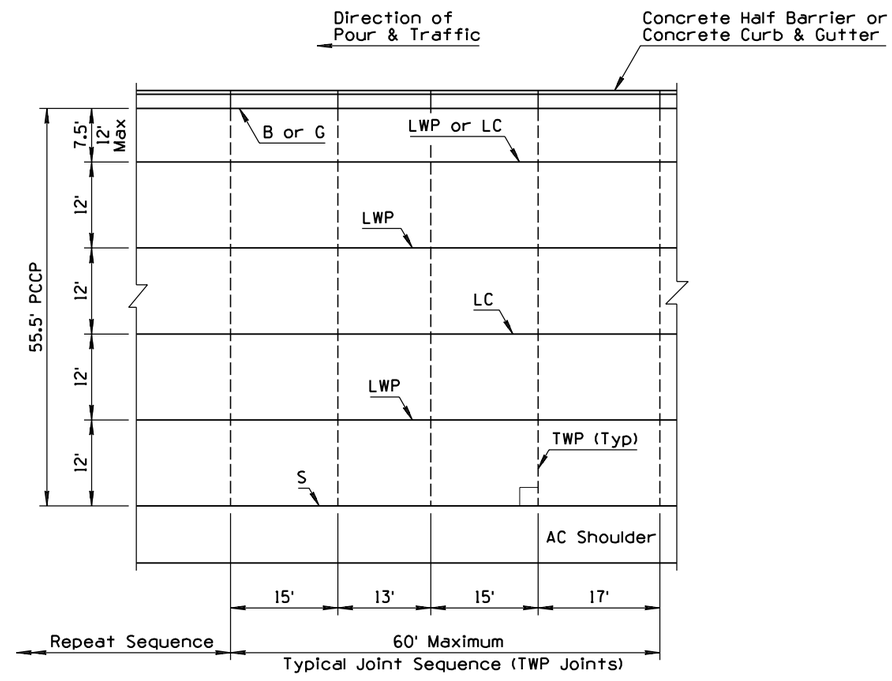

PLAN
55.5' PCCP

GENERAL NOTES

1. LC and LWP joint locations shown are typical. The actual paving pour plan with joint locations shall be based upon the project paving plan submitted by the contractor and approved by the Engineer in accordance with Subsection 401-3.01 of the Standard Specifications.
2. Non-skewed PCCP joints shall be used with load transfer dowel assemblies.
3. See Std Dwg C-07.01 for PCCP joints and additional notes.
4. All transverse joints shall align with joints in adjacent slabs and are perpendicular (90°) to the longitudinal joints.
5. At intersection of side roads or streets, joints shall be placed to give the intersection a symmetrical appearance while conforming to the cross section of the intersecting road or street.
6. See Std Dwg C-05.10 for curb and gutter joint requirements.
7. The rebars in the LWP & LC joints shall be placed no greater than 1'-3" from the TC joint.
8. Transverse weakened plane joint shall be constructed at least 6'-0" from a transverse construction joint.
9. LC and LWP joints shall be located on the edge of traffic lanes unless otherwise shown on the project plans.

APPROVED FOR DESIGN	STATE OF ARIZONA DEPARTMENT OF TRANSPORTATION ROADWAY STANDARD DRAWINGS	REV.
Mary Vipanina		9/04
APPROVED FOR DISTRIBUTION	PCCP JOINT LOCATIONS MAINLINE NON-SKEWED JOINTS 2	DRAWING NO.
		C-07.03 Sheet 6 of 8

NO	DESCRIPTION OF REVISIONS	MADE BY	DATE
1	ADDED GENERAL NOTES 1 & 9	RLF	9/04
2	REVISED TITLE	RLF	9/04
3			
4			

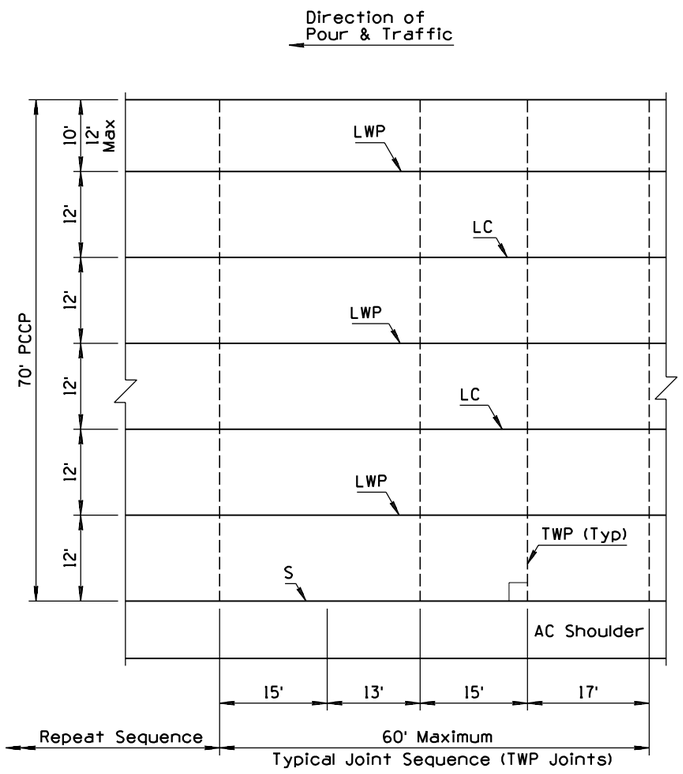

PLAN
70' PCCP

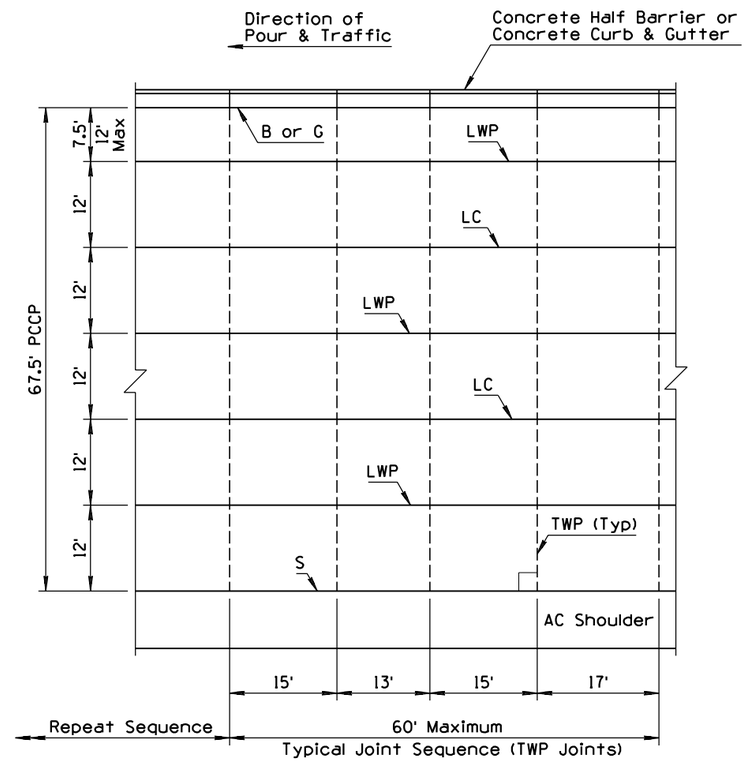

PLAN
67.5' PCCP

GENERAL NOTES

(1) 1. LC and LWP joint locations shown are typical. The actual paving pour plan with joint locations shall be based upon the project paving plan submitted by the contractor and approved by the Engineer in accordance with Subsection 401-3.01 of the Standard Specifications.

2. Non-skewed PCCP joints shall be used with load transfer dowel assemblies.

3. See Std Dwg C-07.01 for PCCP joints and additional notes.

4. All transverse joints shall align with joints in adjacent slabs and are perpendicular (90°) to the longitudinal joints.

5. At intersection of side roads or streets, joints shall be placed to give the intersection a symmetrical appearance while conforming to the cross section of the intersecting road or street.

6. See Std Dwg C-05.10 for curb and gutter joint requirements.

7. The rebars in the LWP & LC joints shall be placed no greater than 1'-3" from the TC joint.

8. Transverse weakened plane joint shall be constructed at least 6'-0" from a transverse construction joint.

(1) 9. LC and LWP joints shall be located on the edge of traffic lanes unless otherwise shown on the project plans.

APPROVED FOR DESIGN	STATE OF ARIZONA DEPARTMENT OF TRANSPORTATION ROADWAY STANDARD DRAWINGS	REV.
Mary Vipauna		9/04
APPROVED FOR DISTRIBUTION	PCCP JOINT LOCATIONS MAINLINE NON-SKEWED JOINTS (2)	DRAWING NO. C-07.03 Sheet 7 of 8

NO	DESCRIPTION OF REVISIONS	MADE BY	DATE
1	ADDED GENERAL NOTES 1 & 9	RLF	9/04
2	REVISED TITLE	RLF	9/04
3			
4			

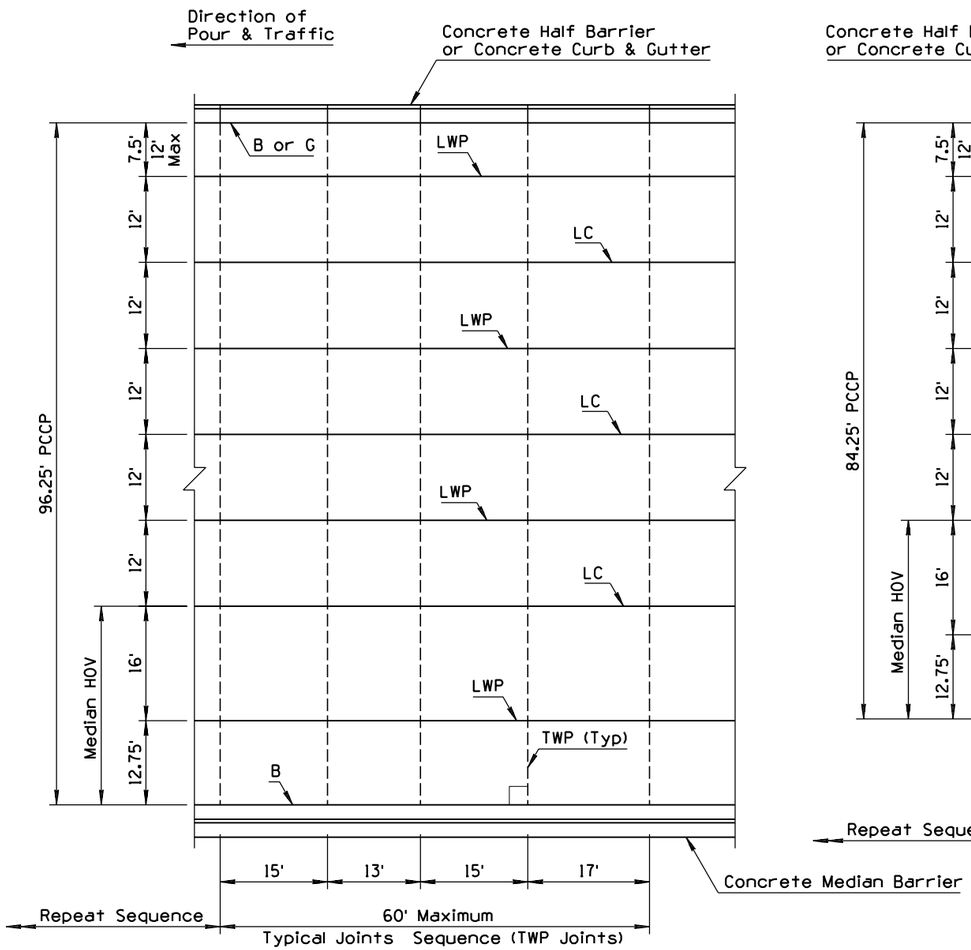

PLAN
96.25' PCCP

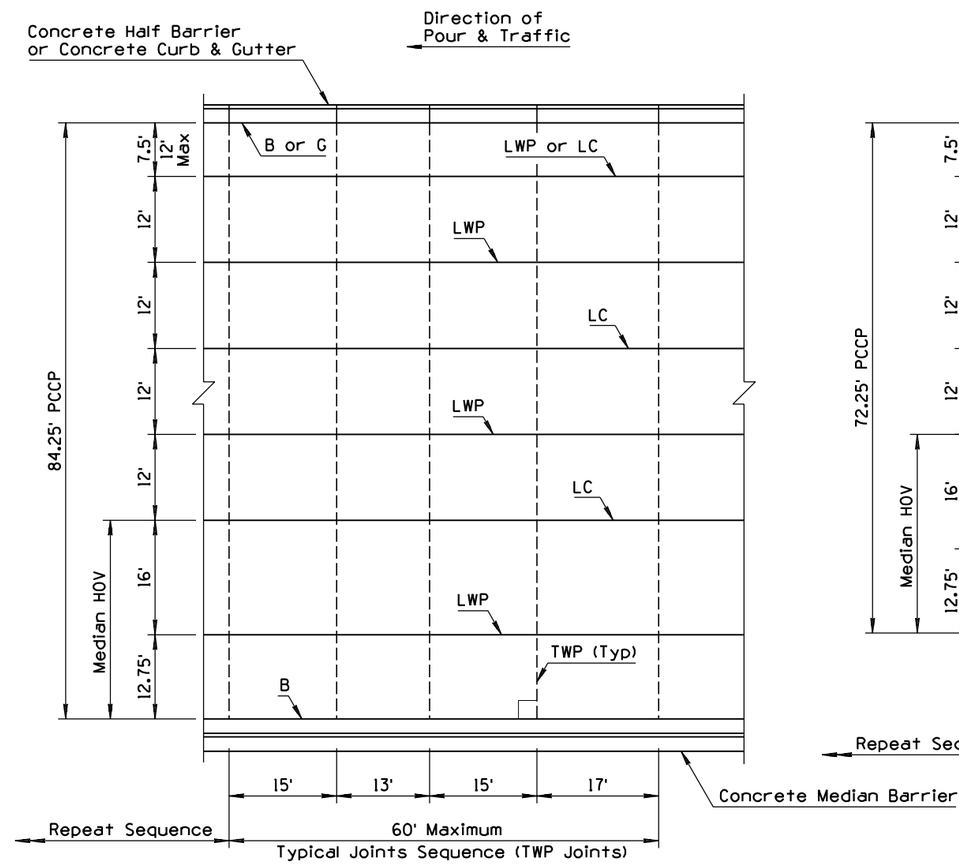

PLAN
84.25' PCCP

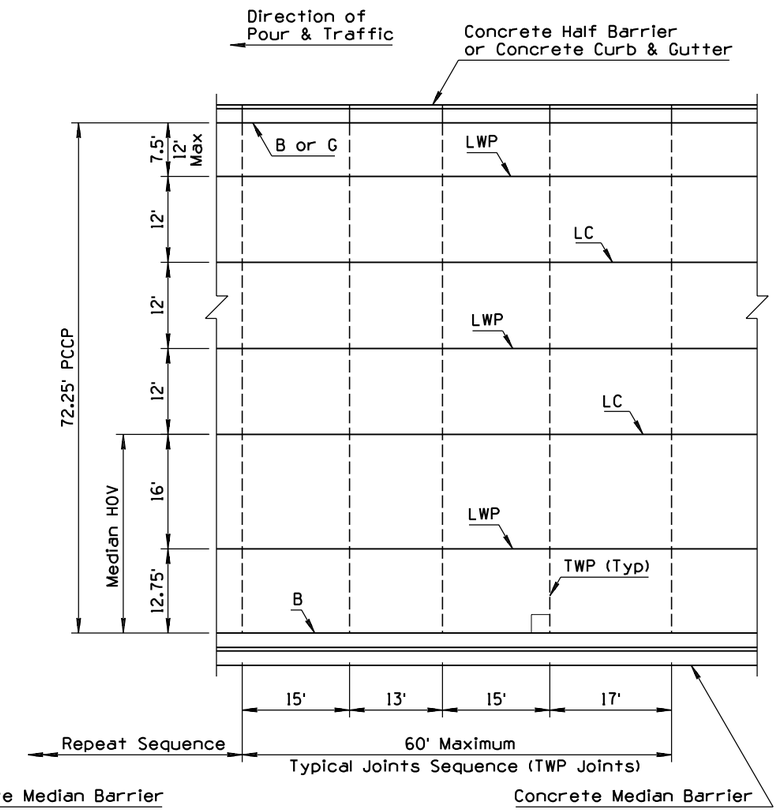

PLAN
72.25' PCCP

GENERAL NOTES

(1) 1. LC and LWP joint locations shown are typical. The actual paving pour plan with joint locations shall be based upon the project paving plan submitted by the contractor and approved by the Engineer in accordance with Subsection 401-3.01 of the Standard Specifications.

2. Non-skewed PCCP joints shall be used with load transfer dowel assemblies.

3. See Std Dwg C-07.01 for PCCP joints and additional notes.

4. All transverse joints shall align with joints in adjacent slabs and are perpendicular (90°) to the longitudinal joints.

5. At intersection of side roads or streets, joints shall be placed to give the intersection a symmetrical appearance while conforming to the cross section of the intersecting road or street.

6. See Std Dwg C-05.10 for curb and gutter joint requirements.

7. The rebars in the LWP & LC joints shall be placed no greater than 1'-3" from the TC joint.

8. Transverse weakened plane joint shall be constructed at least 6'-0" from a transverse construction joint.

(1) 9. LC and LWP joints shall be located on the edge of traffic lanes unless otherwise shown on the project plans.

APPROVED FOR DESIGN	STATE OF ARIZONA DEPARTMENT OF TRANSPORTATION ROADWAY STANDARD DRAWINGS	REV.
		9/04
APPROVED FOR DISTRIBUTION	PCCP JOINT LOCATIONS MAINLINE NON-SKEWED JOINTS (2)	DRAWING NO. C-07.03 Sheet 8 of 8

NO	DESCRIPTION OF REVISIONS	MADE BY	DATE
1	NEW STANDARD DRAWING; CONVERTED FROM DETAIL X7043	RLF	9/04
2			
3			
4			

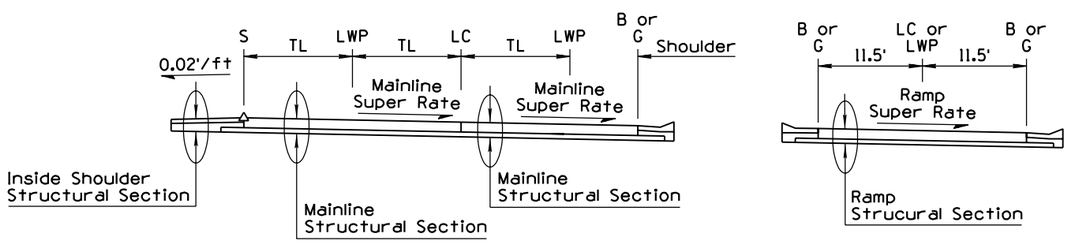

SECTION A-A
MID-RAMP

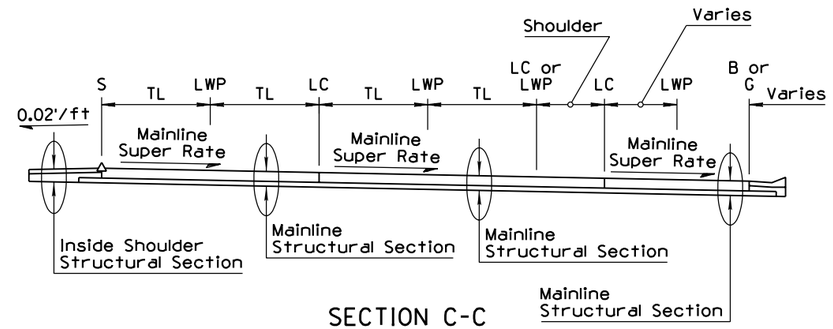

SECTION C-C
RAMP TAPER

GENERAL NOTES

1. All joint locations shown are typical. The actual paving pour plan with joint locations shall be based upon the project paving plan submitted by the contractor and approved by the Engineer in accordance with Subsection 401-3.01 of the Standard Specifications.
2. See Std Dwg C-07.01 for joint information.
3. See plans for ramp dimensions.
4. For ramp joint spacing sequence, see Sheet 4 of 5
5. LC and LWP joints shall be located on the edge of traffic lanes unless otherwise shown on the project plans.

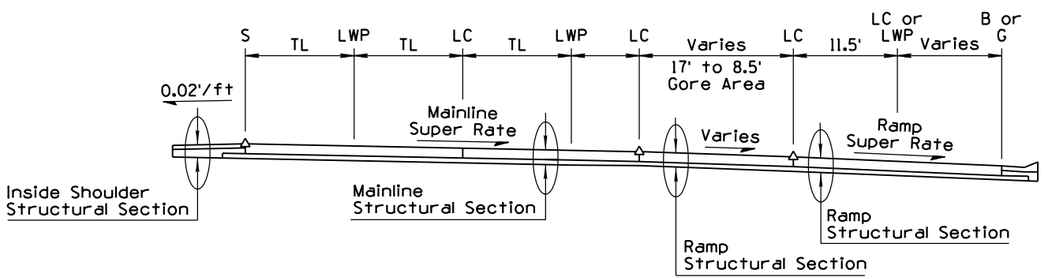

SECTION B-B
GORE AREA

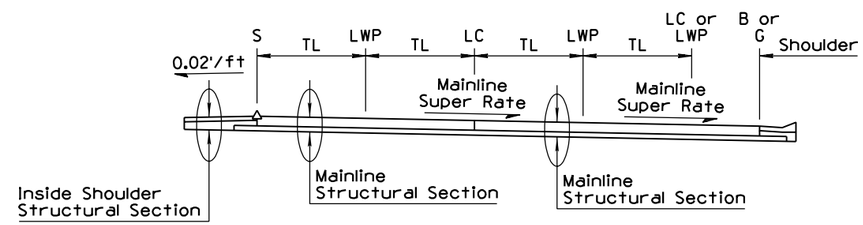

SECTION D-D
MAINLINE

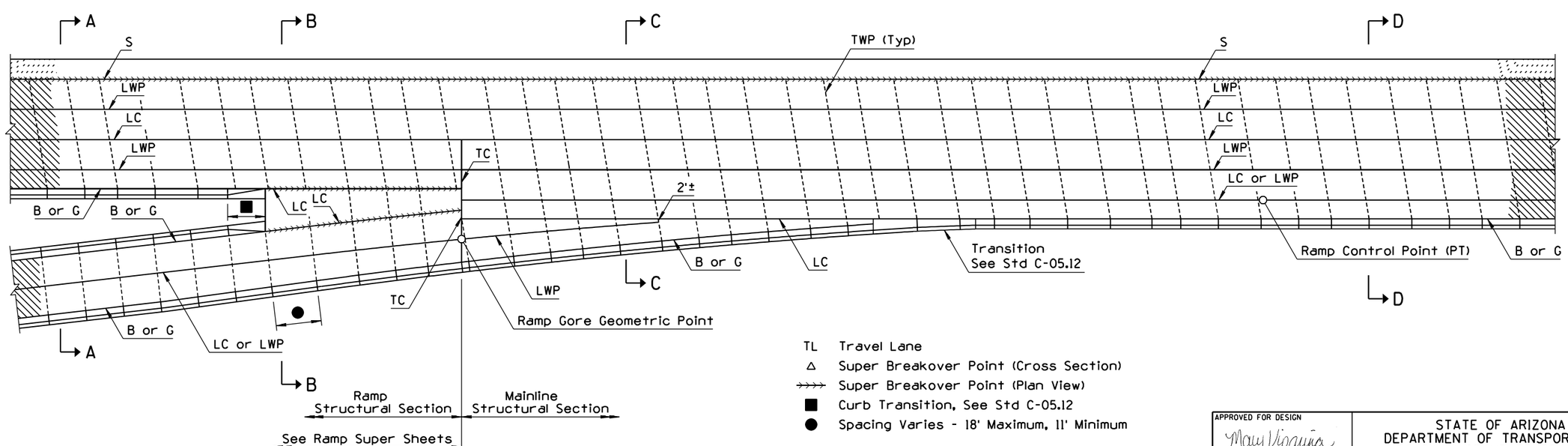

TL Travel Lane
△ Super Breakover Point (Cross Section)
→→→→ Super Breakover Point (Plan View)
■ Curb Transition, See Std C-05.12
● Spacing Varies - 18' Maximum, 11' Minimum

APPROVED FOR DESIGN	STATE OF ARIZONA DEPARTMENT OF TRANSPORTATION ROADWAY STANDARD DRAWINGS	REV. 9/04
APPROVED FOR DISTRIBUTION	PCCP JOINT LOCATIONS PARALLEL TYPE ENTRANCE RAMP WITH AUXILIARY LANE	DRAWING NO. 1 C-07.04 Sheet 1 of 5

NO	DESCRIPTION OF REVISIONS	MADE BY	DATE
1	NEW STANDARD DRAWING: CONVERTED FROM DETAIL X7053	RLF	9/04
2			
3			
4			

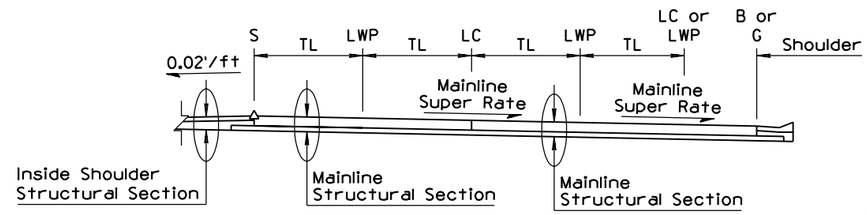

SECTION A-A
MAINLINE

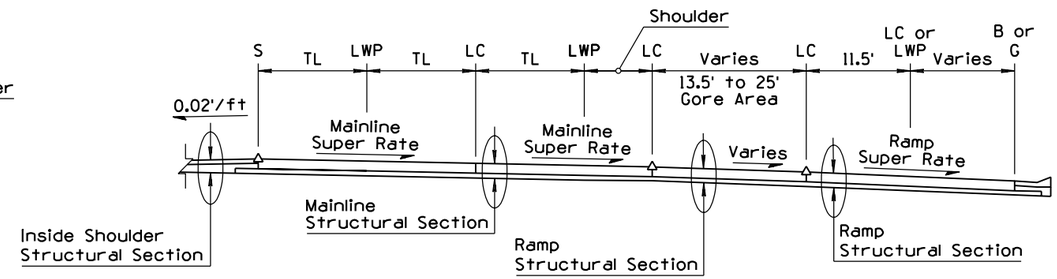

SECTION C-C
GORE AREA

GENERAL NOTES

1. All joint locations shown are typical. The actual paving pour plan with joint locations shall be based upon the project paving plan submitted by the contractor and approved by the Engineer in accordance with Subsection 401-3.01 of the Standard Specifications.
2. See Std Dwg C-07.01 for joint information.
3. See plans for ramp dimensions.
4. For ramp joint spacing sequence, see Sheet 4 of 5.
5. LC and LWP joints shall be located on the edge of traffic lanes unless otherwise shown on the project plans.

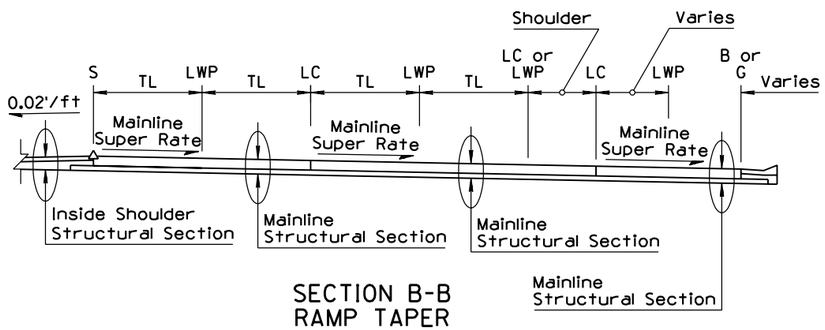

SECTION B-B
RAMP TAPER

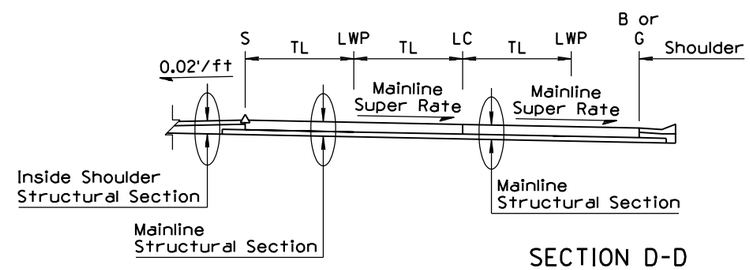

SECTION D-D
MID-RAMP

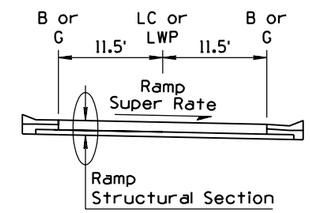

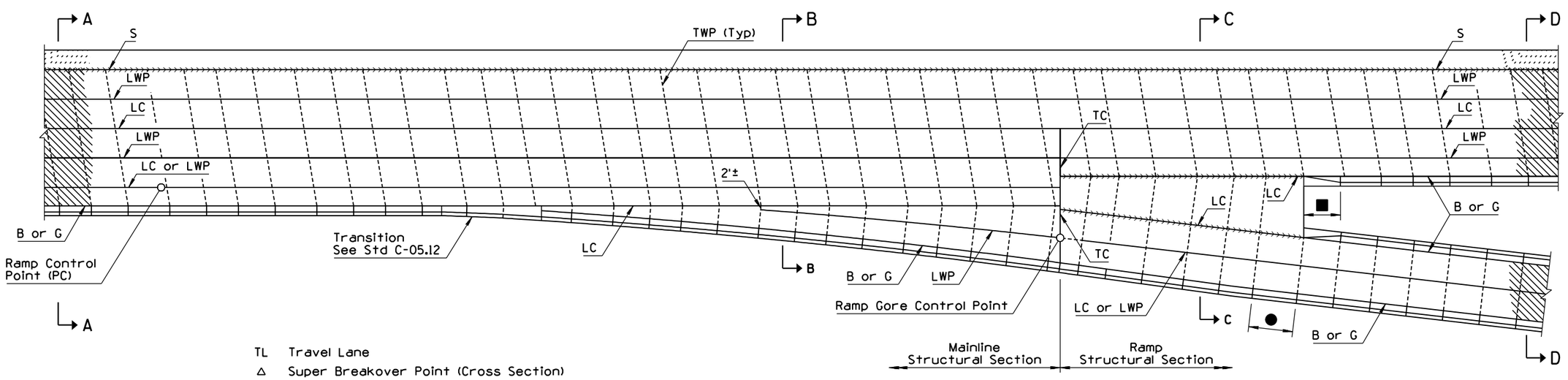

TL Travel Lane
△ Super Breakover Point (Cross Section)
→→→→ Super Breakover Point (Plan View)
■ Curb Transition, See Std C-05.12
● Spacing Varies - 18' Maximum, 11' Minimum

APPROVED FOR DESIGN	STATE OF ARIZONA DEPARTMENT OF TRANSPORTATION ROADWAY STANDARD DRAWINGS	REV. 9/04
APPROVED FOR DISTRIBUTION	PCCP JOINT LOCATIONS PARALLEL TYPE EXIT RAMP WITH AUXILIARY LANE	DRAWING NO. 1 C-07.04 Sheet 2 of 5

NO	DESCRIPTION OF REVISIONS	MADE BY	DATE
1	RENAMED FROM C-07.04 TO C-07.04, SHEET 1 OF 5	RLF	9/04
2			
3			
4			

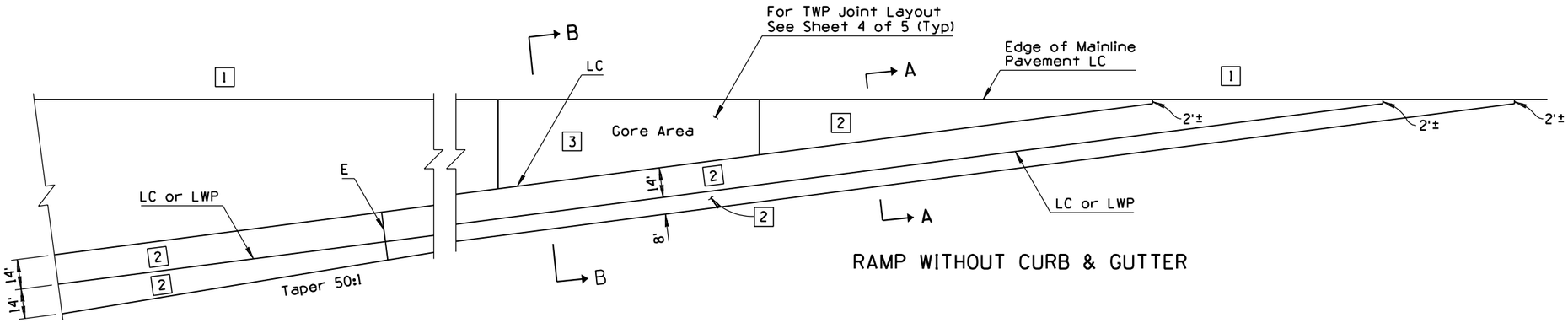

RAMP WITHOUT CURB & GUTTER

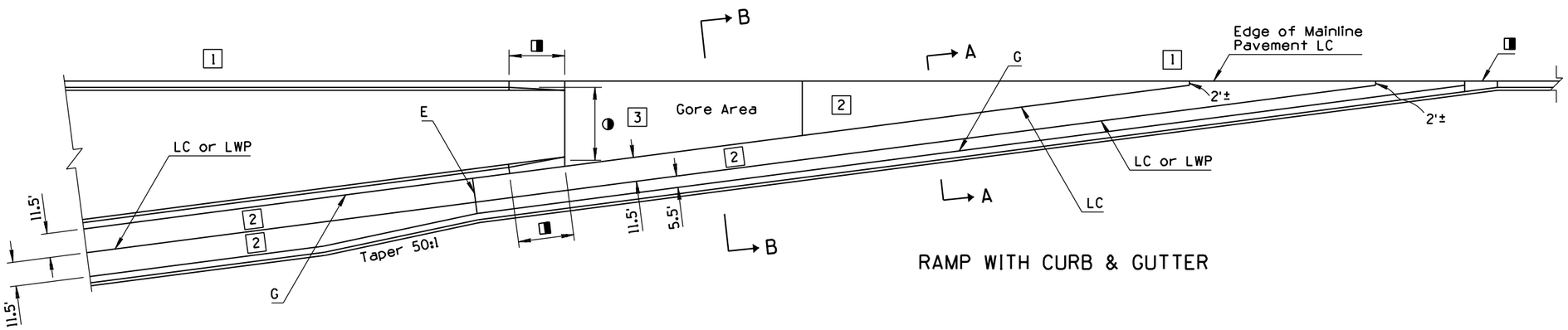

RAMP WITH CURB & GUTTER

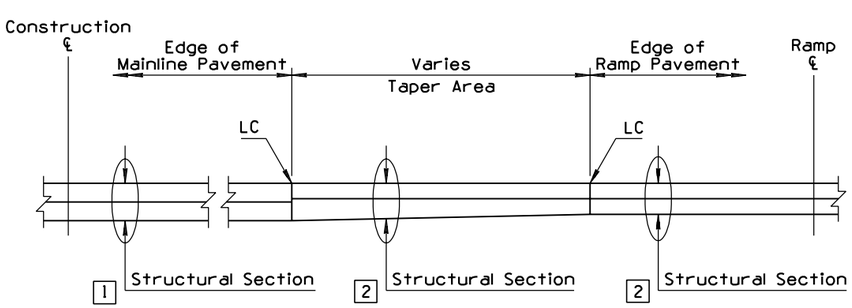

SECTION A-A
RAMP TAPER

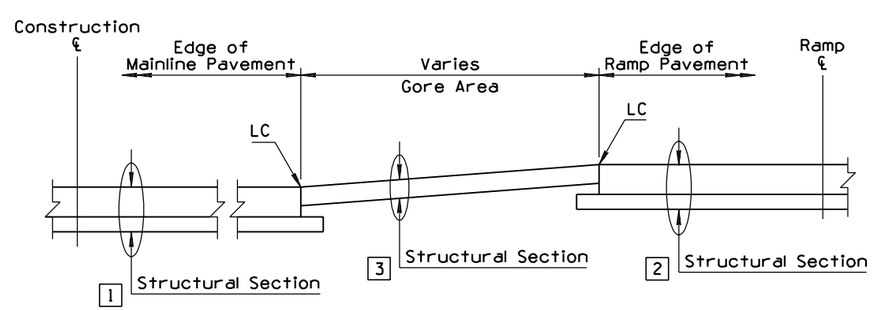

SECTION B-B
GORE AREA

GENERAL NOTES

1. All joint locations shown are typical. The actual paving pour plan with joint locations shall be based upon the project paving plan submitted by the contractor and approved by the Engineer in accordance with Subsection 401-3.01 of the Standard Specifications.
2. Dimensions with a tolerance may be adjusted to align to the nearest transverse weakened plane construction joint as directed.
3. See Std Dwg C-07.01 for joint information.
4. See plans for ramp dimensions.
5. For ramp joint spacing sequence, see Sheet 4 of 5.
6. LC and LWP joints shall be located on the edge of traffic lanes unless otherwise shown on the project plans.

◨ Transition, See Std Dwg C-05.12

◑ 12' Face of Curb to Face of Curb on Entrance Ramp

[1] Mainline Structural Section See Plans

[2] Ramp Structural Section See Plans

[3] Gore Structural Section See Plans

APPROVED FOR DESIGN Mary Viparina	STATE OF ARIZONA DEPARTMENT OF TRANSPORTATION ROADWAY STANDARD DRAWINGS	REV. 9/04
APPROVED FOR DISTRIBUTION	PCCP JOINT LOCATIONS TAPER TYPE ENTRANCE RAMP	DRAWING NO. 1 C-07.04 Sheet 3 of 5

NO	DESCRIPTION OF REVISIONS	MADE BY	DATE
1	RENAMED FROM C-07.05 TO C-07.04, SHEET 4 OF 5	RLF	9/04
2			
3			
4			

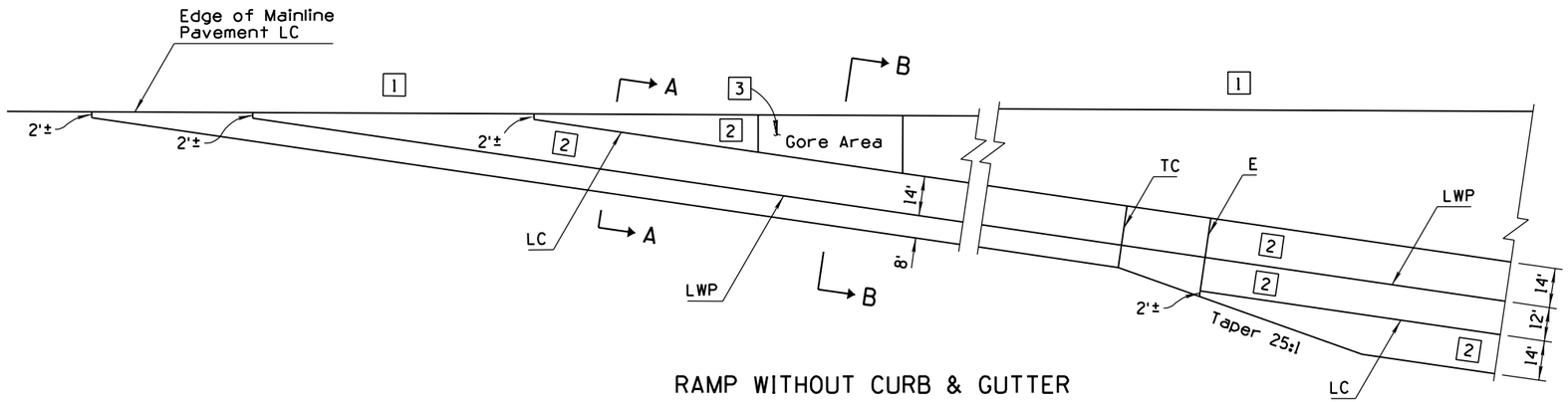

RAMP WITHOUT CURB & GUTTER

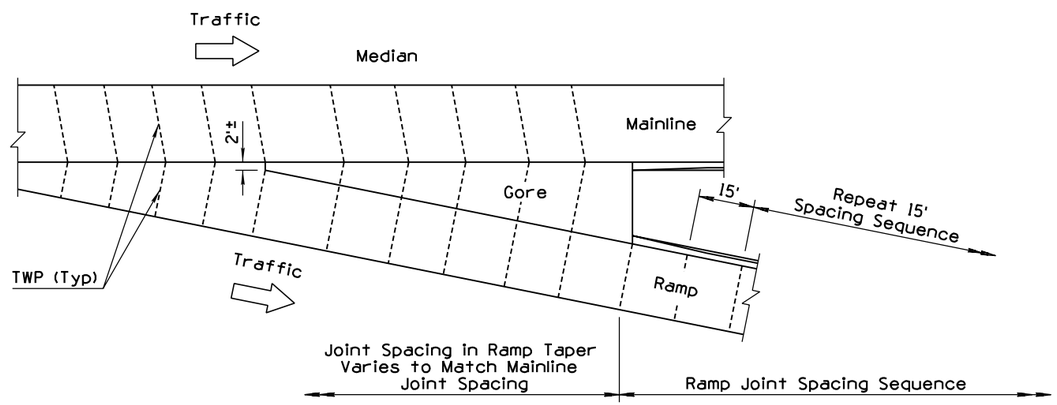

TYPICAL TRANSVERSE WEAKENED PLANE
JOINT LAYOUT AT GORE AREAS

Exit Ramp Shown
Entrance Ramp Similar

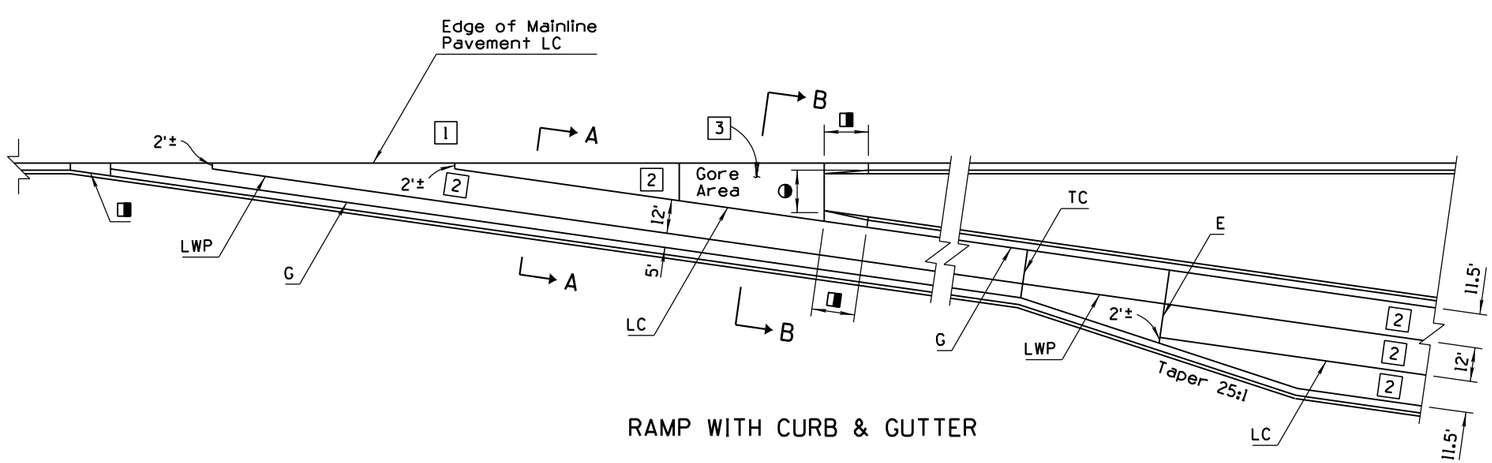

RAMP WITH CURB & GUTTER

GENERAL NOTES

1. All joint locations shown are typical. The actual paving pour plan with joint locations shall be based upon the project paving plan submitted by the contractor and approved by the Engineer in accordance with Subsection 401-3.01 of the Standard Specifications.
2. Dimensions with a tolerance may be adjusted to align to the nearest transverse weakened plane construction joint as directed.
3. See Std Dwg C-07.01 for joint information.
4. See plans for ramp dimensions.

◨ Transition, See Std Dwg C-05.12

◑ 20' Face of Curb to Face of Curb on Exit Ramp

[1] Mainline Structural Section See Plans

[2] Ramp Structural Section See Plans

[3] Gore Structural Section See Plans

APPROVED FOR DESIGN	STATE OF ARIZONA DEPARTMENT OF TRANSPORTATION ROADWAY STANDARD DRAWINGS	REV. 9/04
APPROVED FOR DISTRIBUTION	PCCP JOINT LOCATIONS TAPER TYPE EXIT RAMP	DRAWING NO. (1) C-07.04 Sheet 4 of 5

NO	DESCRIPTION OF REVISIONS	MADE BY	DATE
1	RENAMED FROM C-07.10 TO C-07.04, SHEET 5 OF 5	RLF	9/04
2	REARRANGED DRAWING	RT/RLF	9/04
3			
4			

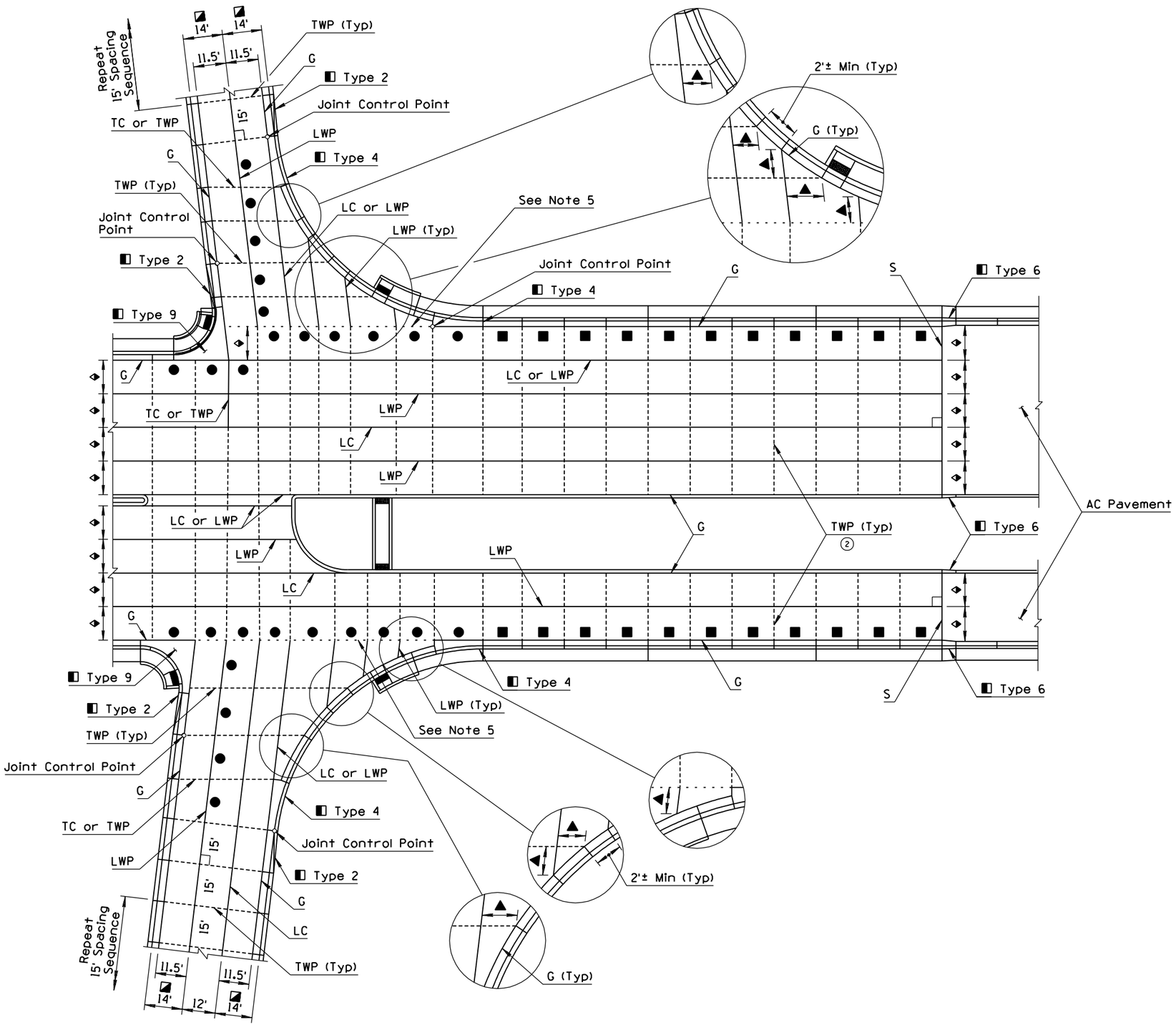

GENERAL NOTES

1. All joint locations shown are typical. The actual paving pour plan with joint locations shall be based upon the project paving plan submitted by the contractor and approved by the Engineer in accordance with Subsection 401-3.01 of the Standard Specifications.
2. See Std Dwg C-07.01 for joint information.
3. The ratio of transverse to longitudinal joint spacing shall be greater than ⅔ but not more than 1½.
4. LC and LWP joints shall be located on the edge of traffic lanes unless otherwise shown on the project plans.
5. See Plans for Crossroad Paving Type
   E or H Joint if PCC Paving
   S Joint if AC Paving
6. Transverse joints shall be perpendicular (90°) to the longitudinal joints, except as shown at the ramp terminal.

▲ 6' Minimum

● Varies - 18' Maximum
11' Minimum

■ Varies - 12' when adjacent gutter widths are 2' or less
- 15' when adjacent gutter widths are greater than 2'

◪ Without curb and gutter

◧ Transition, See Std Dwg C-05.12

◆ Varies - 12' Typical or As Shown on Plans
17' Maximum

APPROVED FOR DESIGN	STATE OF ARIZONA DEPARTMENT OF TRANSPORTATION ROADWAY STANDARD DRAWINGS	REV.
Mary Vipauna		9/04
APPROVED FOR DISTRIBUTION	PCCP JOINT LOCATIONS CROSSROAD AND RAMP TERMINI (2)	DRAWING NO. (1) C-07.04 Sheet 5 of 5

NO	DESCRIPTION OF REVISIONS	MADE BY	DATE
1	DELETED PLAN VIEW AND SECTION	RLF	9/04
2	REVISED & RENAMED SECTION	RLF	9/04
3			
4			

GENERAL NOTES

1. Paved gore area shall be Class S Concrete, f_b=4000 PSI or AC as shown on plans.
2. See Std Dwgs C-07.01 and C-07.04 for joint layout and details.

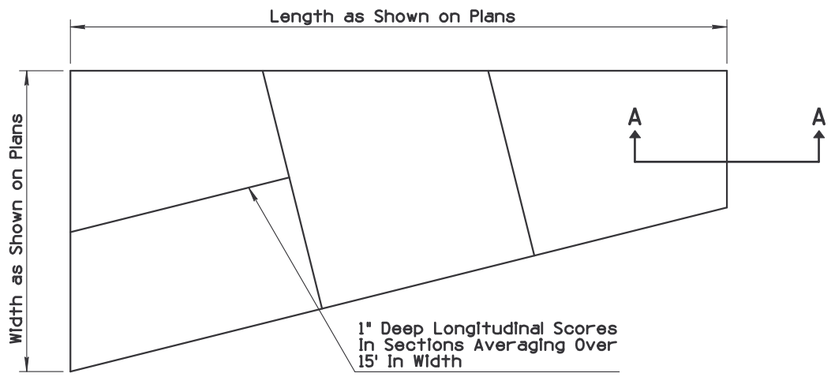

PLAN

CONCRETE GORE AREA
WITH ABUTTING CONCRETE PAVEMENT

①

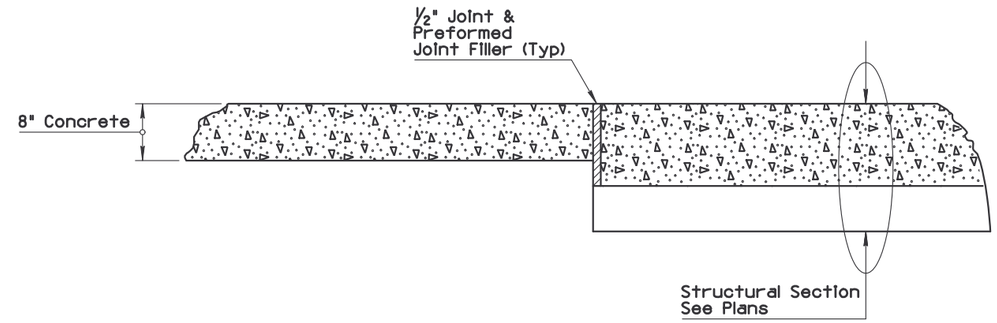

SECTION A-A

①

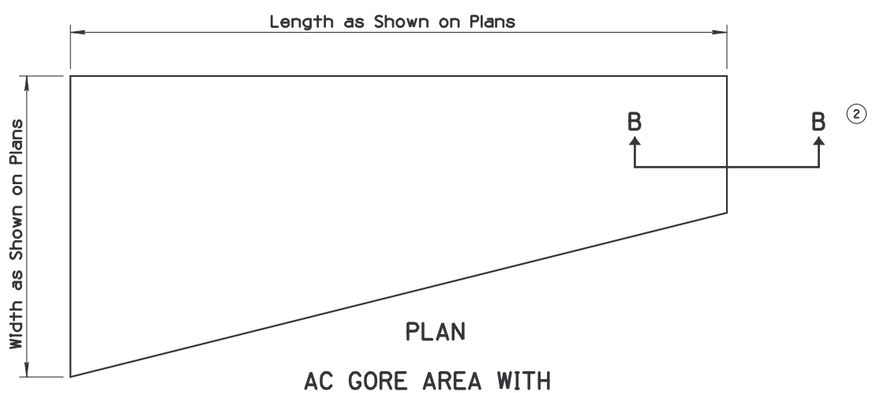

②

PLAN

AC GORE AREA WITH
ABUTTING AC PAVEMENT

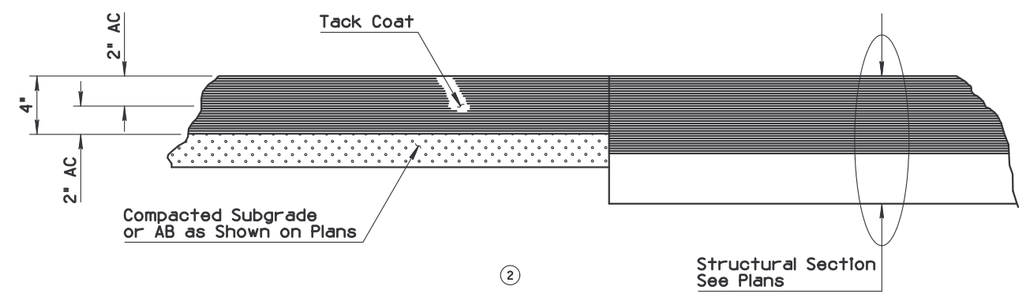

②

SECTION B-B

APPROVED FOR DESIGN	STATE OF ARIZONA DEPARTMENT OF TRANSPORTATION ROADWAY STANDARD DRAWINGS	REV.
		9/04
APPROVED FOR DISTRIBUTION	PAVED GORE AREA	DRAWING NO.
		C-08.20

NO	DESCRIPTION OF REVISIONS	MADE BY	DATE
1	RENAMED STANDARD DRAWING FROM C-10.03 TO C-10.00	RLF	9/04
2	REVISED BARRIER TRANSITION	RLF	9/04
3	REVISED NAMING CONVENTION	RLF	9/04
4			

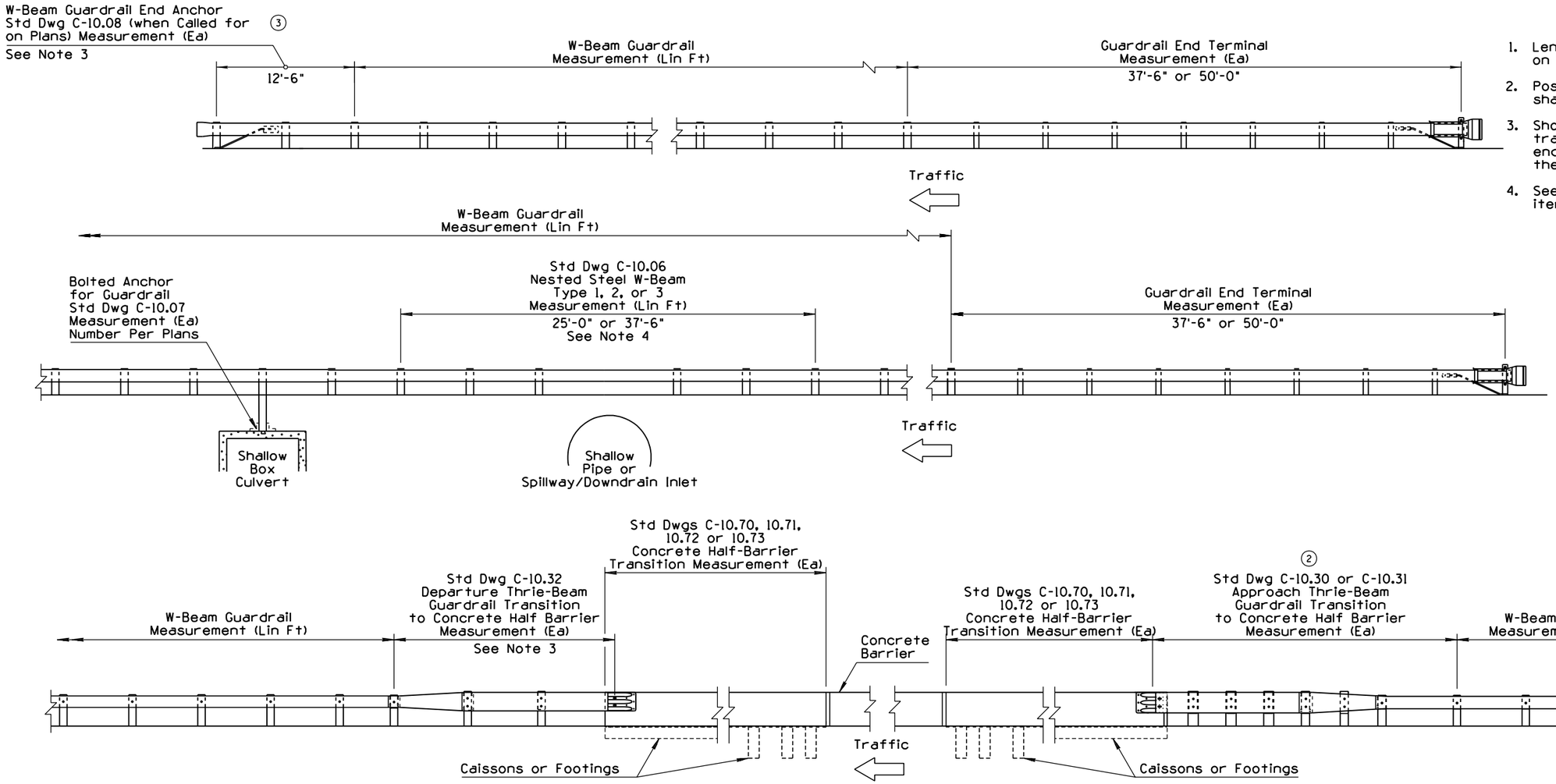

CONCRETE HALF-BARRIER TRANSITION
OFF STRUCTURE

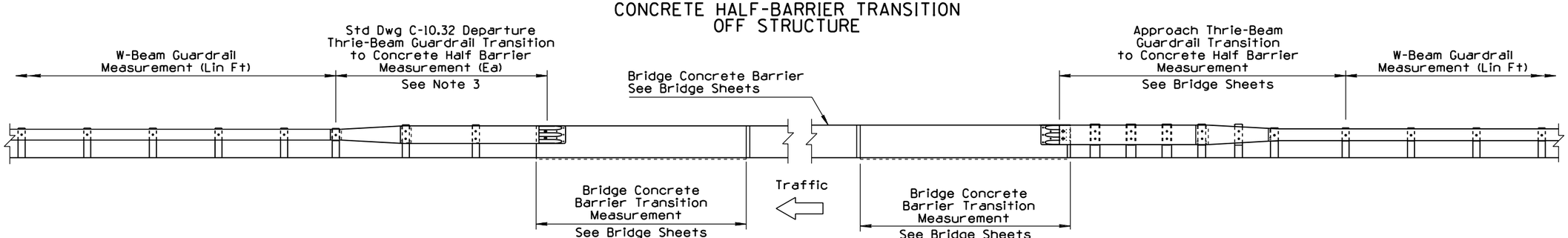

CONCRETE HALF-BARRIER TRANSITION ON STRUCTURE

Concrete Barrier Transitions
Constructed on Top of Wingwalls

GENERAL NOTES

1. Length as shown unless otherwise indicated on project plans.
2. Post type (timber or steel) for transitions shall match post type of adjoining guardrail.
3. Shown for one-way traffic. For two-way traffic, departure requires approach end treatment when located within the clear zone of opposing traffic.
4. See Std Specs for nested guardrail pay item.

APPROVED FOR DESIGN	STATE OF ARIZONA DEPARTMENT OF TRANSPORTATION ROADWAY STANDARD DRAWINGS	REV.
APPROVED FOR DISTRIBUTION	GUARDRAIL MEASUREMENT LIMITS	DRAWING NO. 1 C-10.00

NO	DESCRIPTION OF REVISIONS	MADE BY	DATE
1	MODIFIED PLAN VIEW GRAPHICS/REMOVED WIDTH DIMENSION	RLF	9/04
2	REVISED GENERAL NOTES 3 & 4	RLF	9/04
3	MODIFIED STANDARD DRAWING TITLE	RLF	9/04
4			

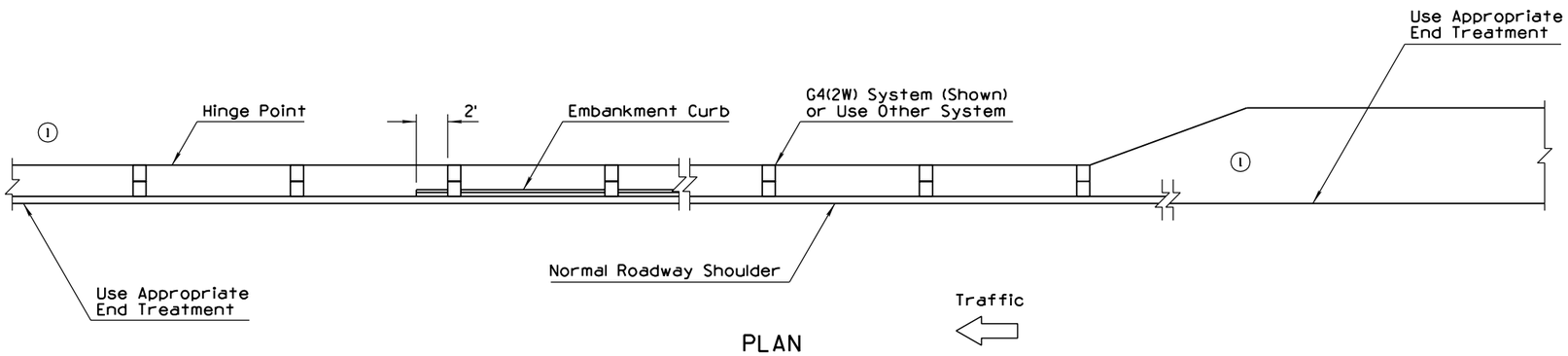

PLAN

GENERAL NOTES

1. All embankment curb shall be protected by guardrail.
2. Guardrail shall extend beyond the limits of embankment curb.
3. (2) See Std Dwg C-10.00 for measurement limits.
4. (2) See Std Specs 703, 905 and 1012-3 for reflector tab and snow marker materials, reflective sheeting, and spacing requirements.

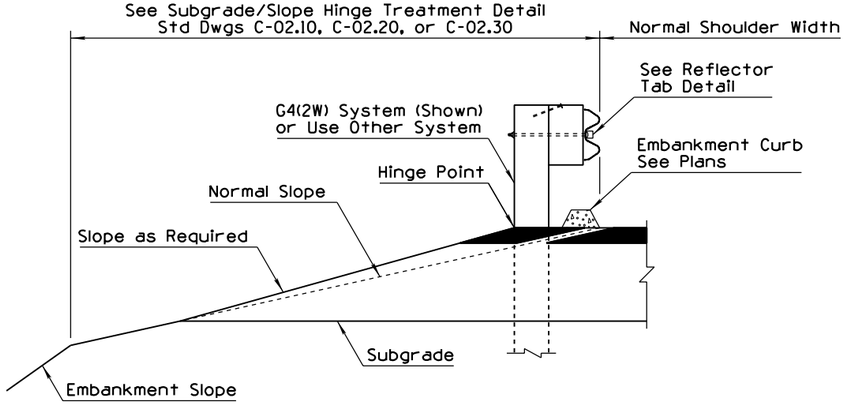

SECTION

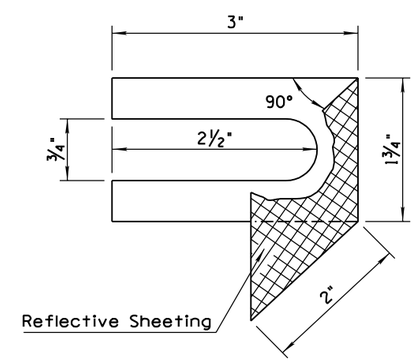

REFLECTOR TAB DETAIL

TYPE A GUARD RAIL INSTALLATION

APPROVED FOR DESIGN Mary Viparina	STATE OF ARIZONA DEPARTMENT OF TRANSPORTATION ROADWAY STANDARD DRAWINGS	REV. 9/04
APPROVED FOR DISTRIBUTION Julie Everett	GUARDRAIL INSTALLATION (3) TYPE A AND REFLECTOR TAB	DRAWING NO. C-10.01

NO	DESCRIPTION OF REVISIONS	MADE BY	DATE
1	REVISED PLAN VIEW GRAPHICS/REMOVED WIDTH DIMENSION	RLF	9/04
2	REVISED GENERAL NOTES 3 & 4	RLF	9/04
3	REVISED STANDARD DRAWING TITLE	RLF	9/04
4			

GENERAL NOTES

1. All embankment curb shall be protected by guardrail.
2. Guardrail shall extend beyond the limits of embankment curb.
3. (2) See Std Dwg C-10.00 for measurement limits.
4. (2) See Std Specs 703, 905 and 1012-3 for reflector tab and snow marker materials, reflective sheeting, and spacing requirements.

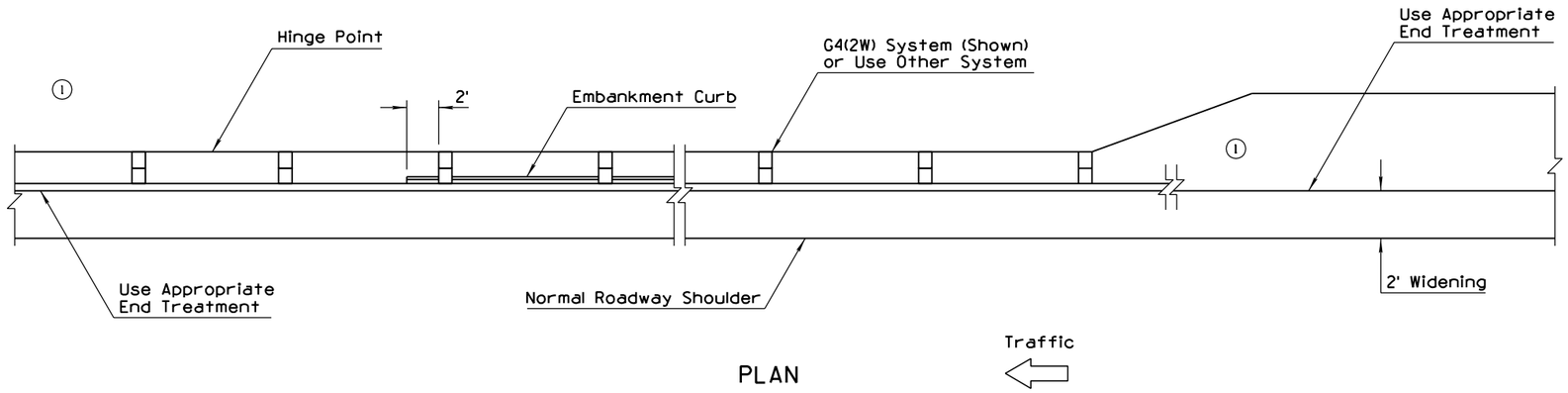

PLAN

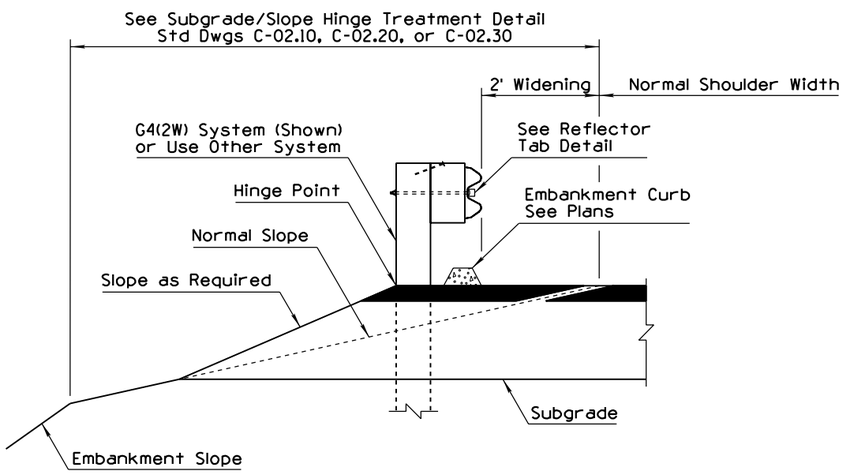

SECTION

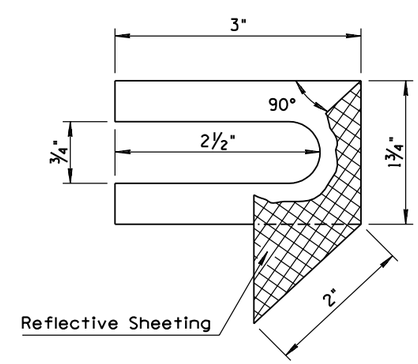

REFLECTOR TAB DETAIL

TYPE B GUARD RAIL INSTALLATION

APPROVED FOR DESIGN	STATE OF ARIZONA DEPARTMENT OF TRANSPORTATION ROADWAY STANDARD DRAWINGS	REV.
		9/04
APPROVED FOR DISTRIBUTION	GUARDRAIL INSTALLATION (3) TYPE B AND REFLECTOR TAB	DRAWING NO.
		C-10.02

NO	DESCRIPTION OF REVISIONS	MADE BY	DATE
1	REVISED DESIGNATION	RLF	9/04
2	REVISED GENERAL NOTE 1 & ADDED GENERAL NOTE 2	RLF	9/04
3	RENAMED STD DRAWING FROM C-10.20 AND REVISED TITLE	RLF	9/04
4			

G4(1W) SYSTEM (8"x8")

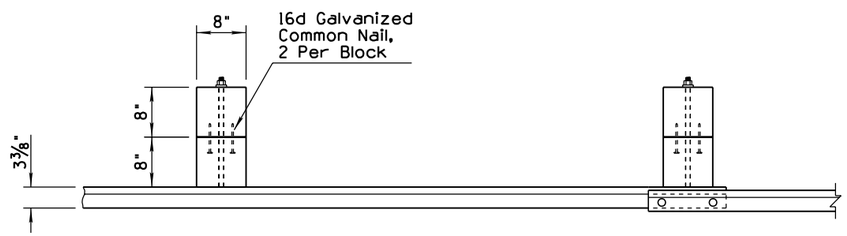

PLAN

Traffic

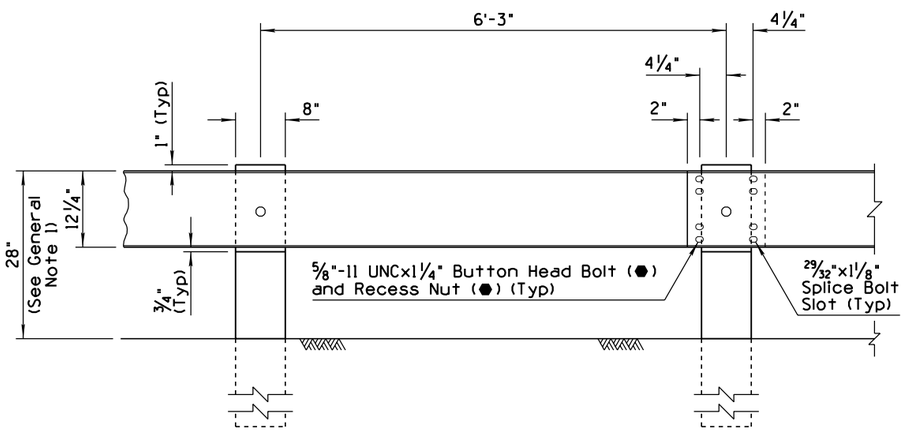

ELEVATION

G4(1W) SYSTEM (8"x8")

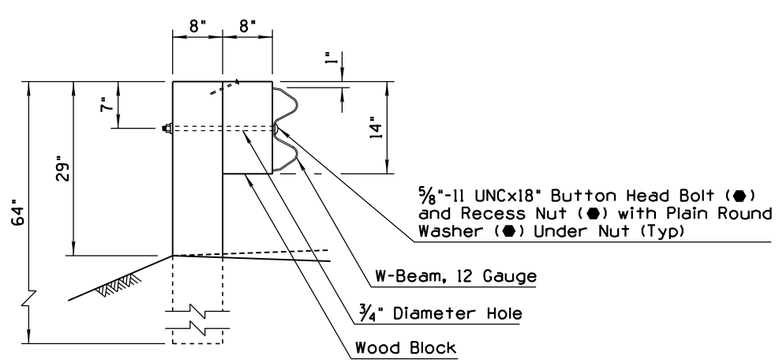

SECTION G4(1W)

G4(2W) SYSTEM (6"x8")

PLAN

Traffic

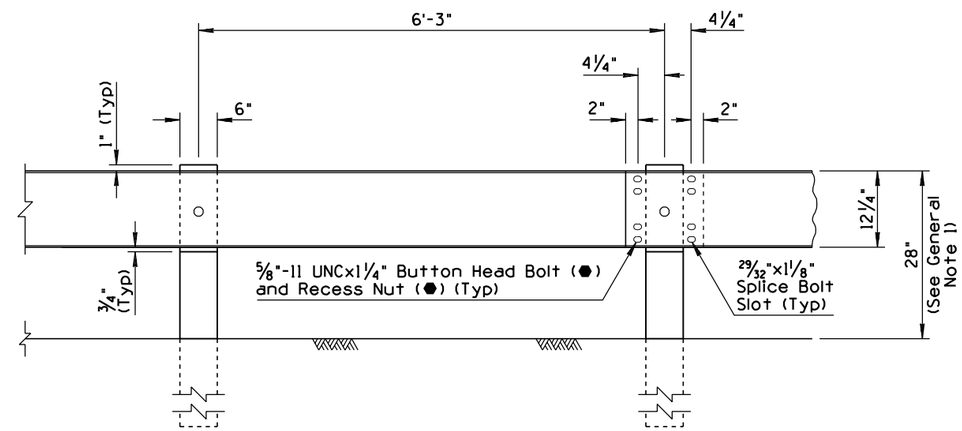

ELEVATION

G4(2W) SYSTEM (6"x8")

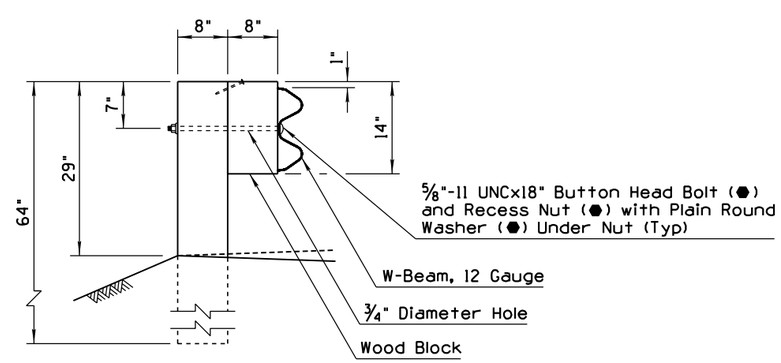

SECTION G4(2W)

GENERAL NOTES

(2) 1. The control height for guardrail system is 28" to the top of rail, measured at the face of rail from the normal finished shoulder elevation.

(2) 2. Guardrail shall be lapped in the direction of adjacent traffic.

(1) ● - Indicates AASHTO, AGC & ARTBA Task Force 13 Report designation

APPROVED FOR DESIGN	STATE OF ARIZONA DEPARTMENT OF TRANSPORTATION ROADWAY STANDARD DRAWINGS	REV.
		9/04
APPROVED FOR DISTRIBUTION	W-BEAM GUARDRAIL G4(1W) AND G4(2W) BLOCKED-OUT TIMBER POST (3)	DRAWING NO. (3) C-10.03

NO	DESCRIPTION OF REVISIONS	MADE BY	DATE
1	REVISED DESIGNATION	RLF	9/04
2	REVISED GENERAL NOTES 1 & 2	RLF	9/04
3	RENAMED STD DRAWING FROM C-10.21 & REVISED TITLE	RLF	9/04
4			

G4(1S) SYSTEM

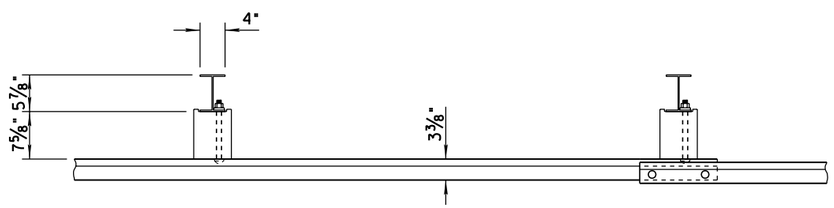

Traffic

PLAN

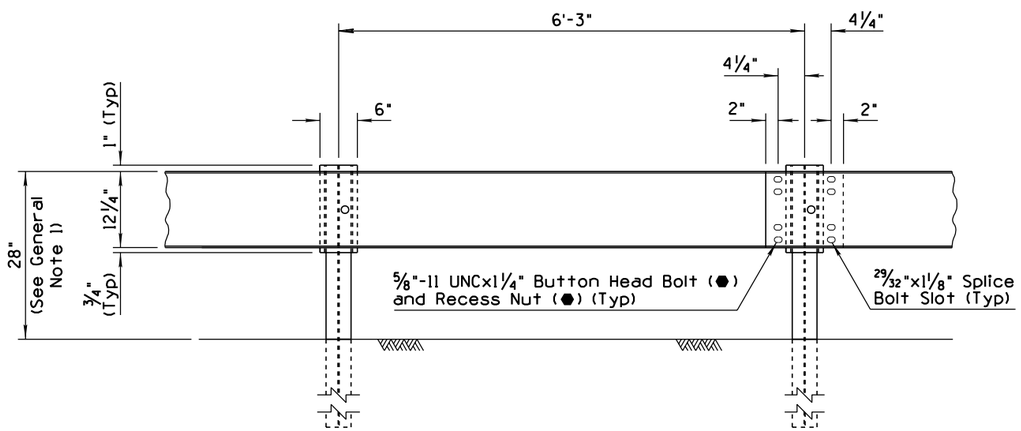

ELEVATION
G4(1S) SYSTEM

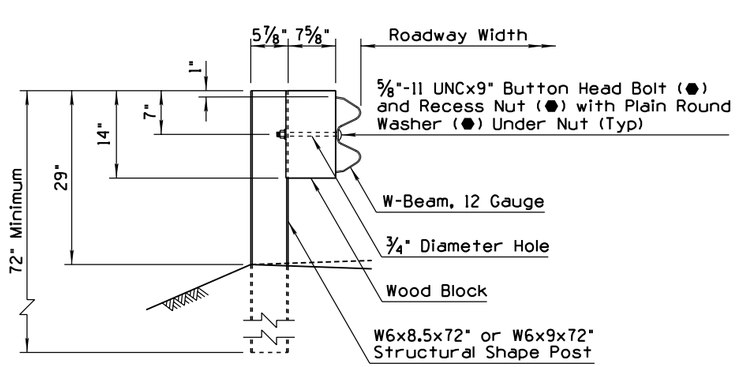

SECTION G4(1S)
SHOWN WITHOUT CURB

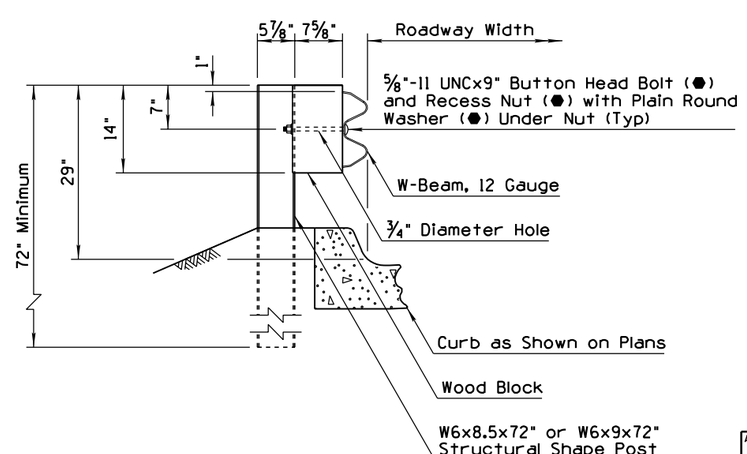

SECTION G4(1S)
SHOWN WITH CURB

GENERAL NOTES

(2) 1. The control height for guardrail system is 28" to the top of rail, measured at the face of rail from the normal finished shoulder elevation.

(2) 2. Guardrail shall be lapped in the direction of adjacent traffic.

(1) ● - Indicates AASHTO, AGC & ARTBA Task Force 13 Report designation

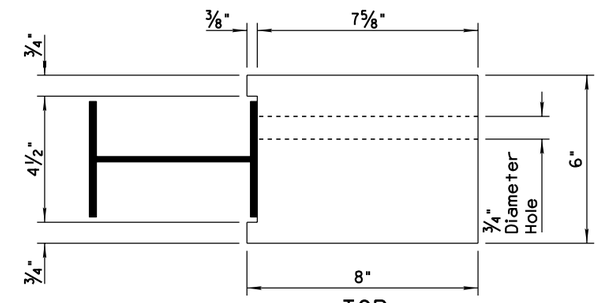

TOP
VIEW

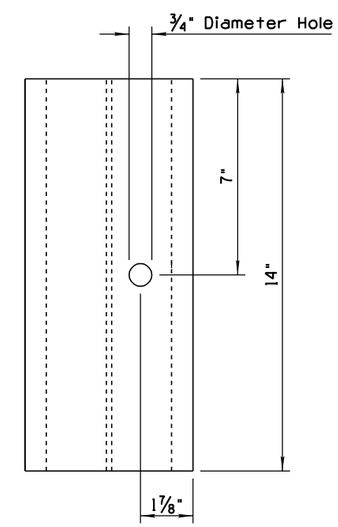

FRONT
VIEW

WOOD BLOCK DETAIL

APPROVED FOR DESIGN Mary Vipaina	STATE OF ARIZONA DEPARTMENT OF TRANSPORTATION ROADWAY STANDARD DRAWINGS	REV. 9/04
APPROVED FOR DISTRIBUTION	W-BEAM GUARDRAIL G4(1S) BLOCKED-OUT STEEL POST (3)	DRAWING NO. C-10.04 (3)

NO	DESCRIPTION OF REVISIONS	MADE BY	DATE
1	REVISED DESIGNATION	RLF	9/04
2	DELETED REFERENCE TO TYPE B-1 CURB & GUTTER	RLF	9/04
3	ADDED GENERAL NOTE 2	RLF	9/04
4	RENAMED STD DWG FROM C-10.22, SHEET 1 & MODIFIED TITLE	RLF	9/04

GENERAL NOTES

1. Height of curb shall not exceed 4 inches.
3. 2. Guardrail shall be lapped in the direction of adjacent traffic.
1. ● - Indicates AASHTO, AGC & ARTBA Task Force 13 Report designation

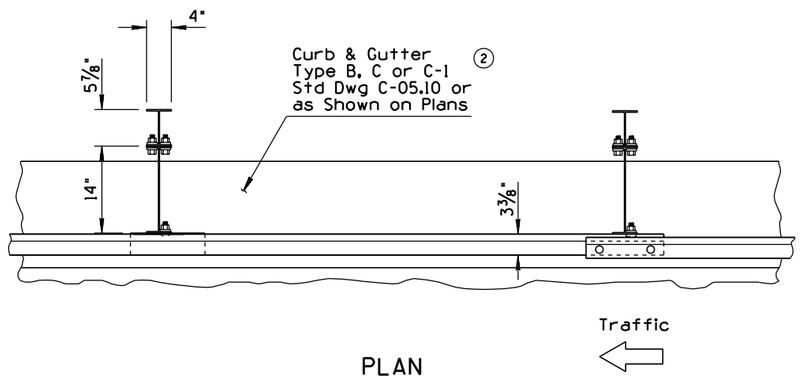

PLAN

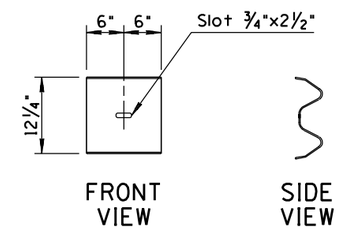

W-BEAM BACK-UP PLATE DETAIL

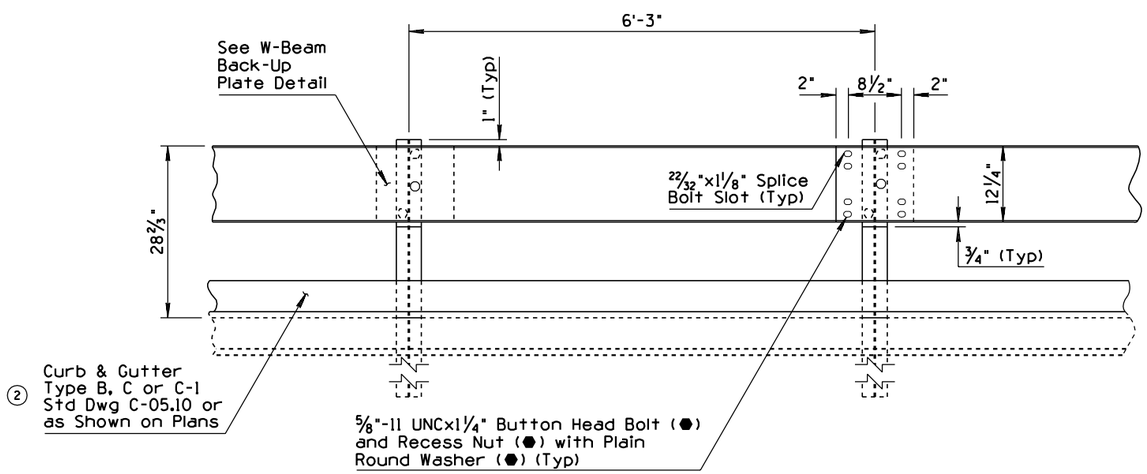

ELEVATION

G4(1S-MODIFIED)

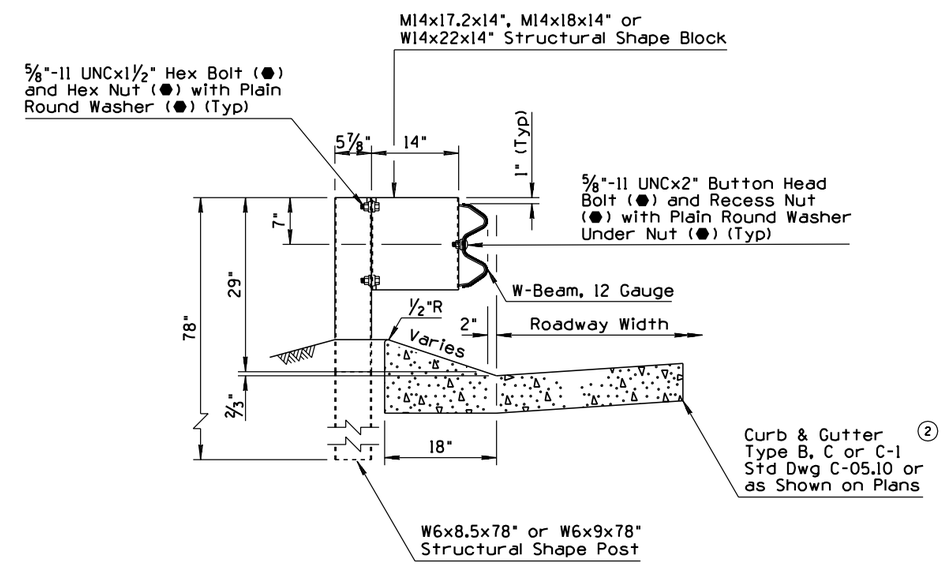

SECTION

APPROVED FOR DESIGN	STATE OF ARIZONA DEPARTMENT OF TRANSPORTATION ROADWAY STANDARD DRAWINGS	REV. 9/04
APPROVED FOR DISTRIBUTION	W-BEAM GUARDRAIL 4 G4(MODIFIED) WITH FREEWAY CURB AND GUTTER	DRAWING NO. 4 C-10.05 Sheet 1 of 2

NO	DESCRIPTION OF REVISIONS	MADE BY	DATE
1	RENAMED STD DWG FROM C-10.28, 1 OF 2 & REVISED TITLE	RLF	9/04
2	REVISED DESIGNATION	RLF	9/04
3	REVISED GENERAL NOTES 2 & 3	RLF	9/04
4	REVISED SECTION VIEW	RLF	9/04

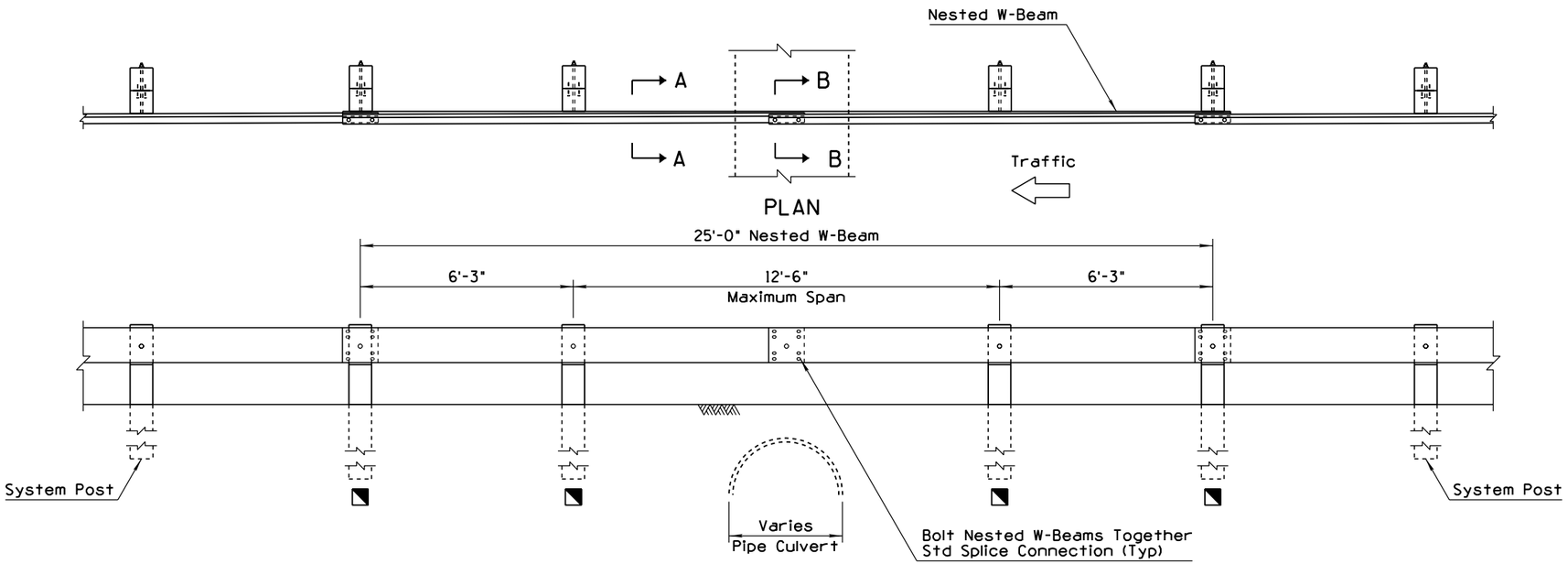

ELEVATION
NESTED STEEL W-BEAM - TYPE 1 - SHORT SPAN
(SPLICE CONNECTION INSIDE SPAN) LENGTH = 25'-0"

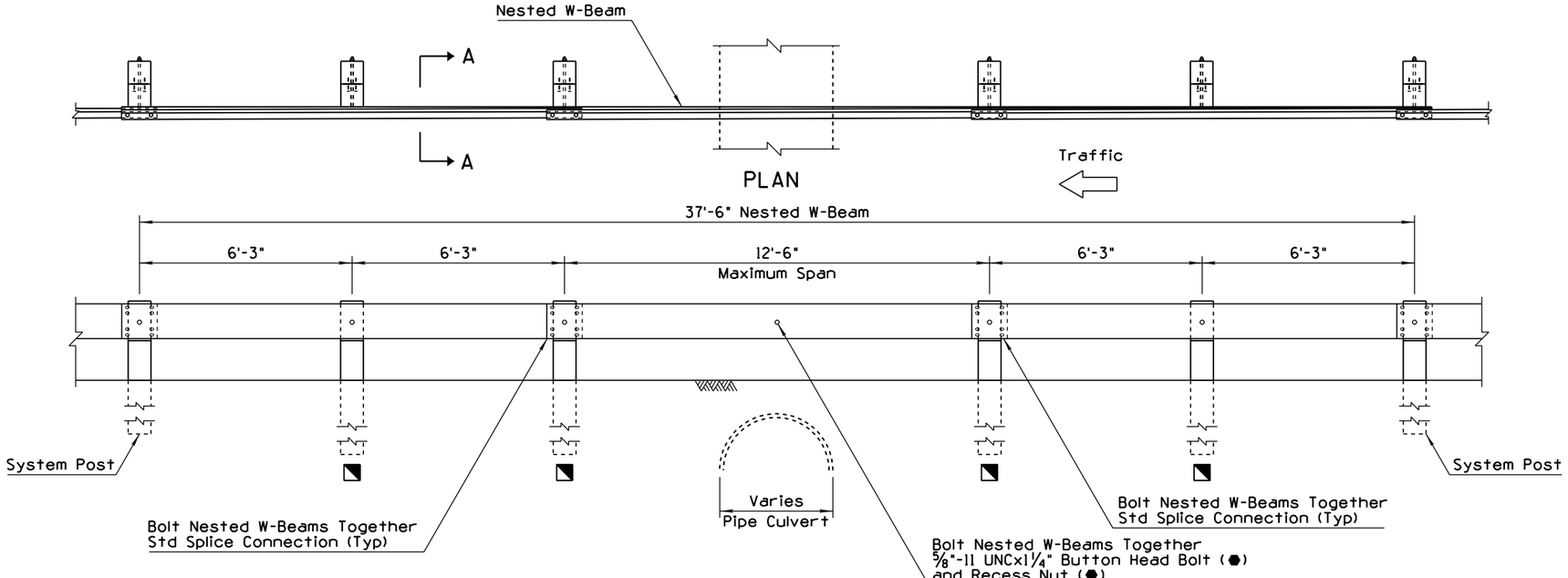

ELEVATION
NESTED STEEL W-BEAM - TYPE 2 - SHORT SPAN
(SPLICE CONNECTION OUTSIDE SPAN) LENGTH = 37'-6"

GENERAL NOTES

1. See Std Dwgs C-10.03 and C-10.04 for additional information and dimensions.
3 2. Install Type 1 when splice connection location falls on object. Install Type 2 when non-splice post falls on object.
3 3. Guardrail shall be lapped in the direction of adjacent traffic.
4. For Type 1 and Type 2, a maximum of one post may be eliminated within a span of nested guardrail.

2 ● - Indicates AASHTO, AGC & ARTBA Task Force 13 Report designation

◥ 72" Timber Post

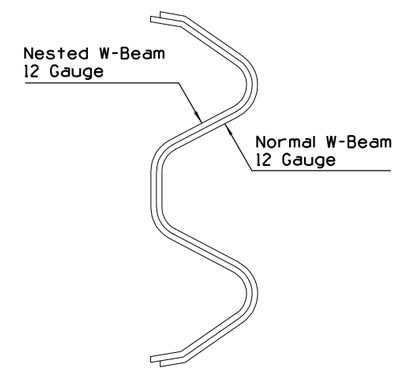

SECTION A-A

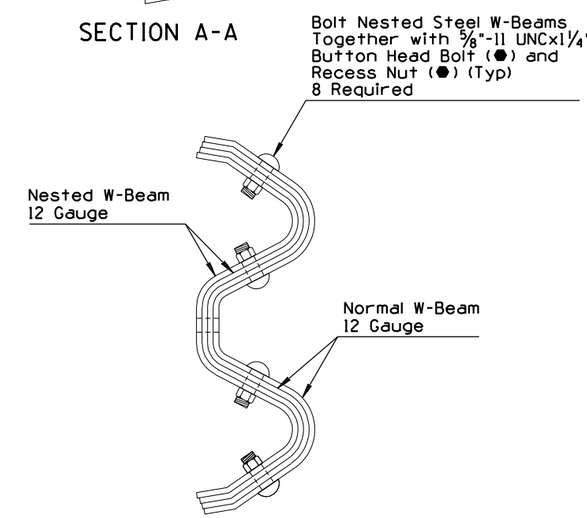

SECTION B-B 4

APPROVED FOR DESIGN	STATE OF ARIZONA DEPARTMENT OF TRANSPORTATION ROADWAY STANDARD DRAWINGS	REV.
		9/04
APPROVED FOR DISTRIBUTION	W-BEAM GUARDRAIL 1 NESTED TYPES 1 AND 2	DRAWING NO. 1 C-10.06 Sheet 1 of 2

NO	DESCRIPTION OF REVISIONS	MADE BY	DATE
1	RENAMED STD DWG FROM C-10.28, 2 OF 2 & REVISED TITLE	RLF	9/04
2	ADDED GENERAL NOTE 3	RLF	9/04
3	ADDED DESIGNATION	RLF	9/04
4			

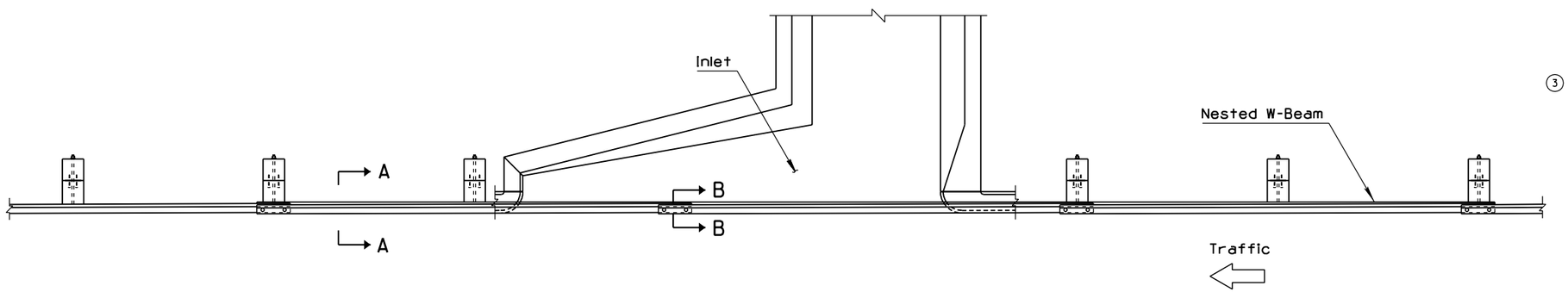

PLAN

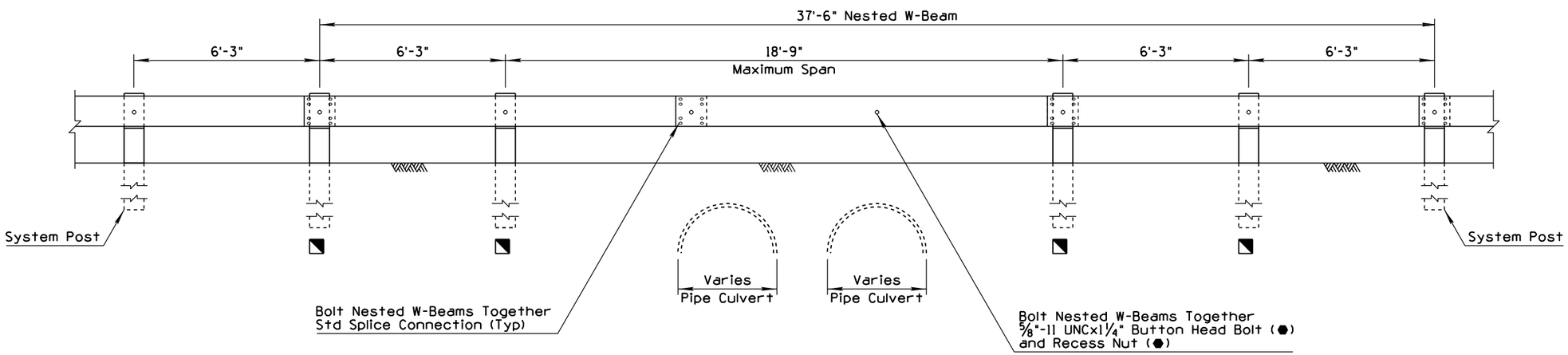

ELEVATION

NESTED STEEL W-BEAM - TYPE 3 - LONG SPAN
LENGTH = 37'-6"

GENERAL NOTES

1. Use Type 3 Nested W-Beam to span downdrain or spillway inlets as shown in the plan view.
2. Use Type 3 Nested W-Beam to span multiple obstructions as shown in the elevation view.
2. 3. Guardrail shall be lapped in the direction of adjacent traffic.
4. For Type 3, a maximum of two posts may be eliminated within a span of nested guardrail.

3. ● - Indicates AASHTO, AGC & ARTBA Task Force 13 Report designation

◥ 72" Timber Post

See Sheet 1 of 2 for Sections A-A and B-B

APPROVED FOR DESIGN	STATE OF ARIZONA DEPARTMENT OF TRANSPORTATION ROADWAY STANDARD DRAWINGS	REV.
Mary Vipanna		9/04
APPROVED FOR DISTRIBUTION	W-BEAM GUARDRAIL (1) NESTED TYPE 3	DRAWING NO. (1) C-10.06 Sheet 2 of 2

NO	DESCRIPTION OF REVISIONS	MADE BY	DATE
1	RENAMED FROM C-10.29, 1 OF 2 & REVISED TITLE	RLF	9/04
2	ADDED GENERAL NOTE 2	RLF	9/04
3	REVISED GENERAL NOTE 1	RLF	9/04
4			

GENERAL NOTES

(3) 1. See Std Dwgs C-10.03 and C-10.04 for additional information and dimensions.

(2) 2. Guardrail shall be lapped in the direction of adjacent traffic.

◪ 72" Timber Post

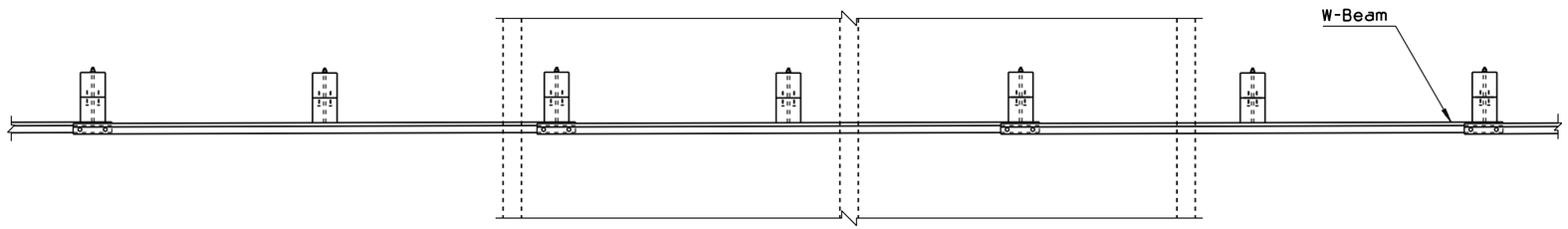

PLAN

Traffic

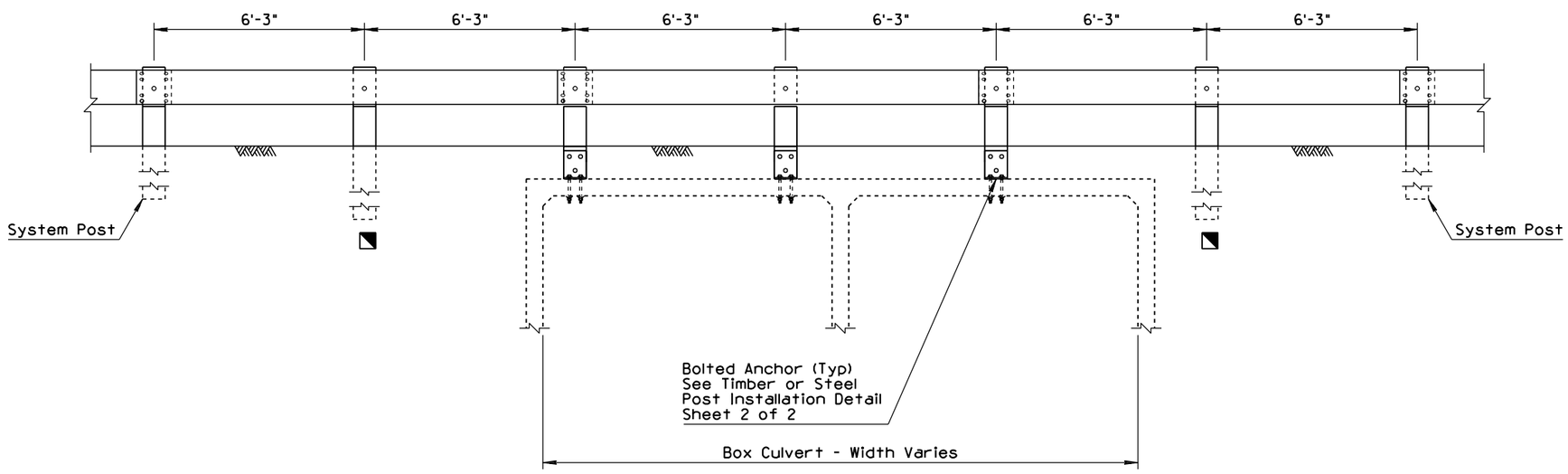

ELEVATION

BOLTED ANCHOR
BOX CULVERT INSTALLATION

APPROVED FOR DESIGN	STATE OF ARIZONA DEPARTMENT OF TRANSPORTATION ROADWAY STANDARD DRAWINGS	REV.
Mary Viparina		9/04
APPROVED FOR DISTRIBUTION	W-BEAM GUARDRAIL BOLTED ANCHOR (1)	DRAWING NO. (1) C-10.07 Sheet 1 of 2

NO	DESCRIPTION OF REVISIONS	MADE BY	DATE
1	RENAMED STD DWG FROM C-10.29, 2 OF 2 & REVISED TITLE	RLF	9/04
2	REVISED DESIGNATION	RLF	9/04
3			
4			

GENERAL NOTES

1. Bracket may be made of one piece hot bent, or two pieces welded together.
2. Short timber posts anchored to box culvert roof shall be 8" x 8" only.

(2) ● - Indicates AASHTO, AGC & ARTBA Task Force 13 Report designation

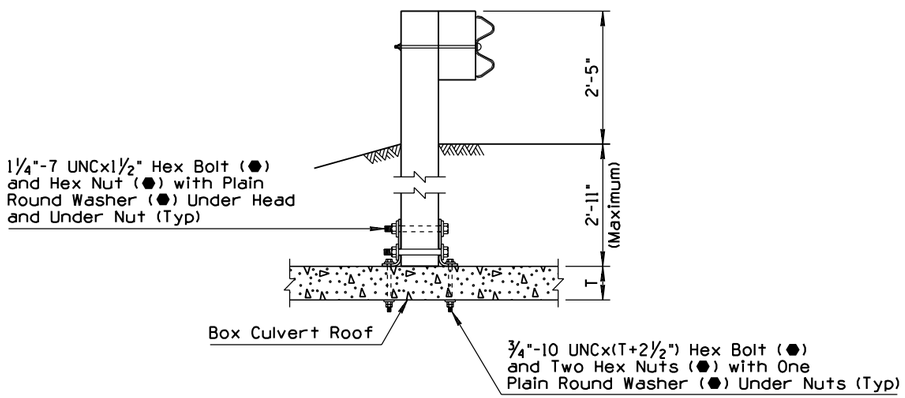

INSTALLATION DETAIL

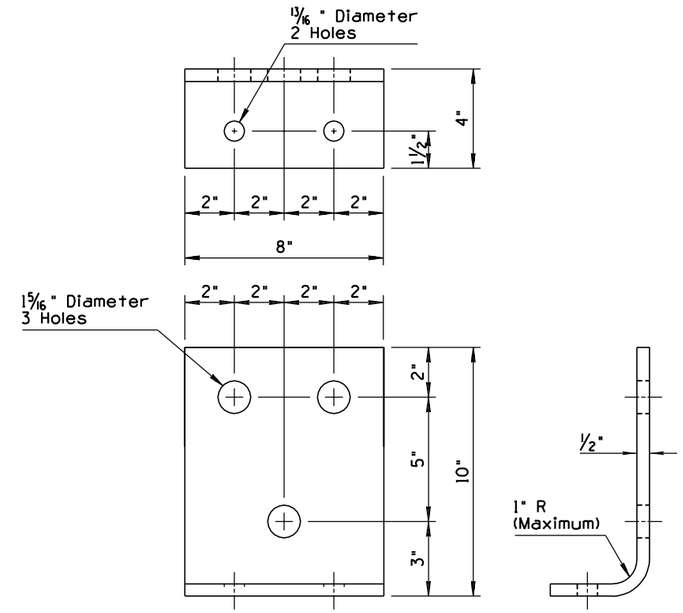

BRACKET DETAIL

BOLTED ANCHOR
TIMBER POST INSTALLATION DETAIL

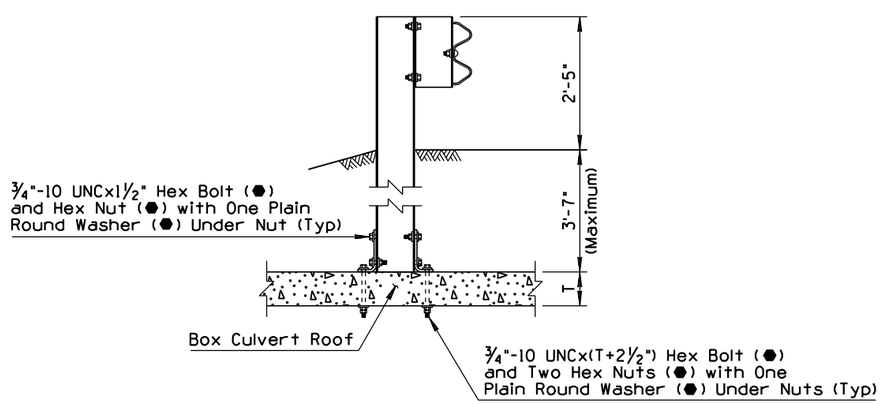

INSTALLATION DETAIL

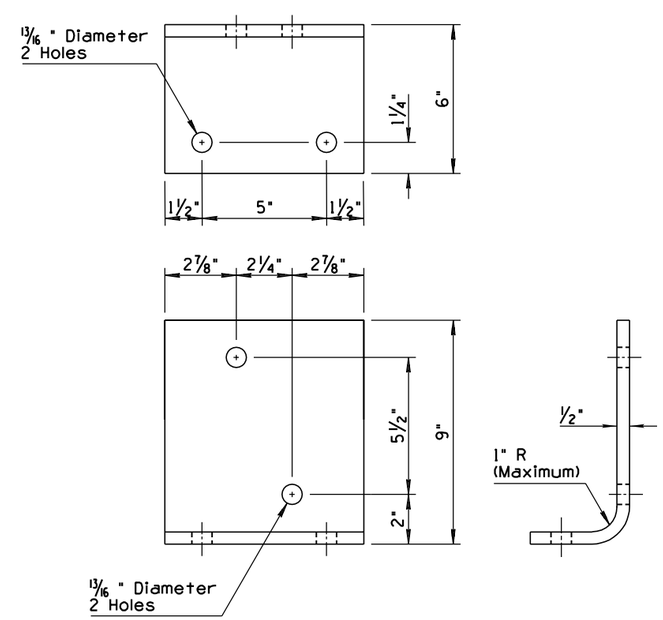

BRACKET DETAIL

BOLTED ANCHOR
STEEL POST INSTALLATION DETAIL

APPROVED FOR DESIGN	STATE OF ARIZONA DEPARTMENT OF TRANSPORTATION ROADWAY STANDARD DRAWINGS	REV.
Mary Vipauna		9/04
APPROVED FOR DISTRIBUTION	W-BEAM GUARDRAIL BOLTED ANCHOR (1)	DRAWING NO. (1) C-10.07 Sheet 2 of 2

NO	DESCRIPTION OF REVISIONS	MADE BY	DATE
1	RENAMED STD DWG FROM C-10.45 & REVISED TITLE	RLF	9/04
2	REVISED DESIGNATION	RLF	9/04
3	REVISED GENERAL NOTE 2	RLF	9/04
4			

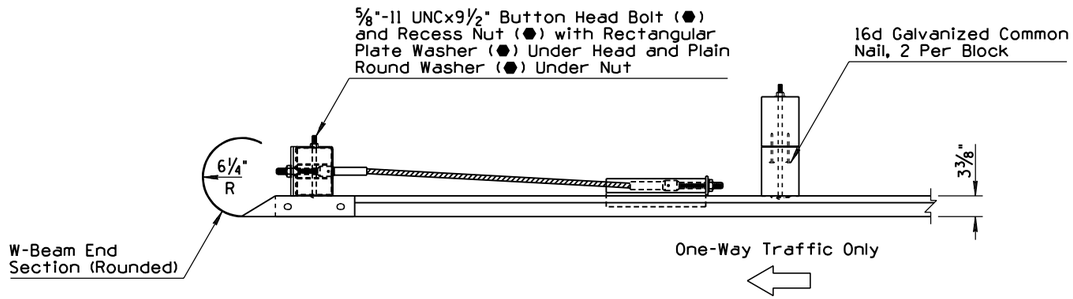

PLAN

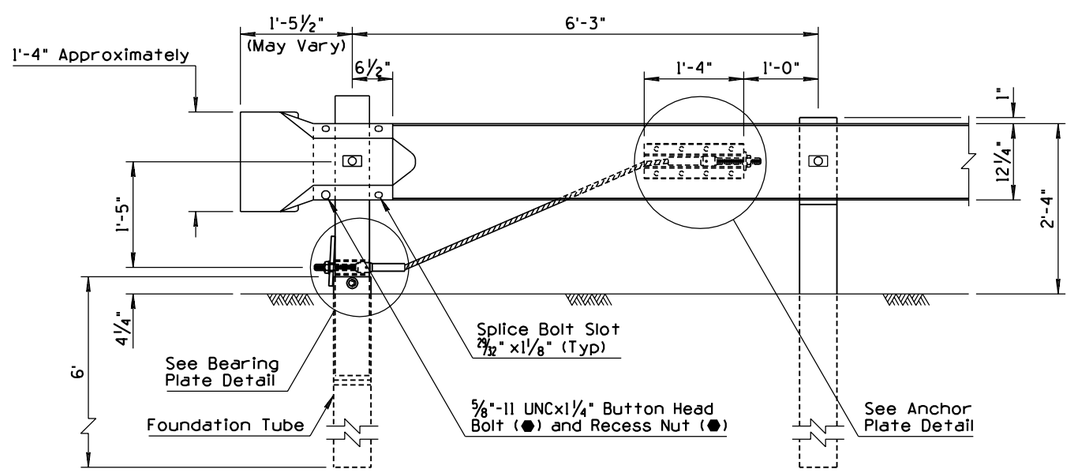

ELEVATION

GENERAL NOTES

1. The cable assembly shall be tightened to remove slack.
3. 2. One wrap of 14 gauge galvanized steel wire shall be wrapped around the terminal post near the top of the bearing plate.
3. See Std Dwg C-10.00 for measurement limits.
2. ● - Indicates AASHTO, AGC & ARTBA Task Force 13 Report designation

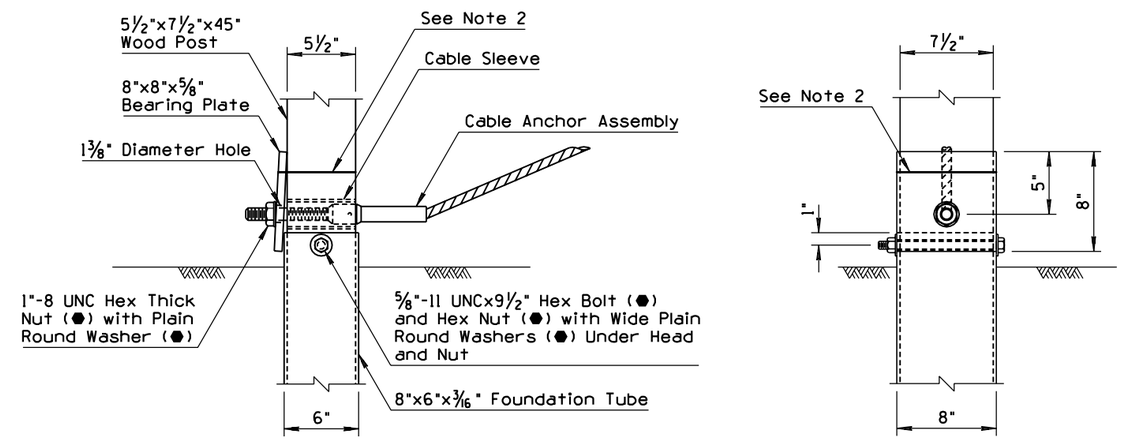

FRONT VIEW

SIDE VIEW

BEARING PLATE DETAIL

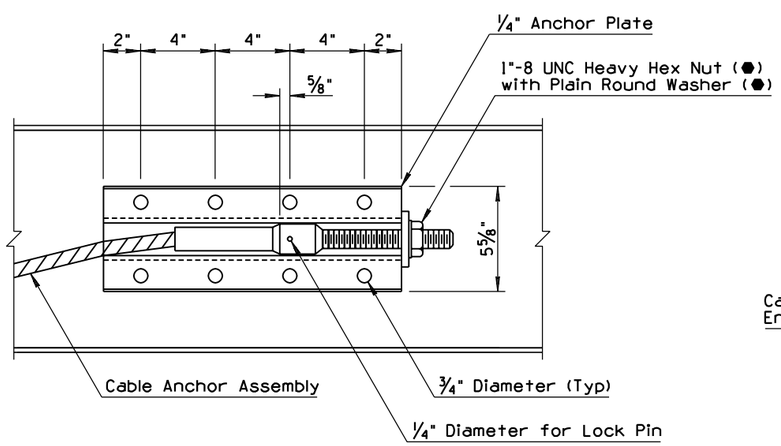

FRONT VIEW

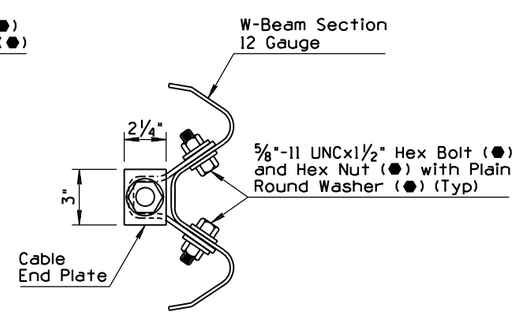

SIDE VIEW

ANCHOR PLATE DETAIL

APPROVED FOR DESIGN	STATE OF ARIZONA DEPARTMENT OF TRANSPORTATION ROADWAY STANDARD DRAWINGS	REV.
Mary Viparina		9/04
APPROVED FOR DISTRIBUTION	W-BEAM GUARDRAIL END ANCHOR (1)	DRAWING NO. (1) C-10.08

NO	DESCRIPTION OF REVISIONS	MADE BY	DATE
1	RENAMED STD DWG FROM C-10.24 & REVISED TITLE	RLF	9/04
2	REVISED DESIGNATION	RLF	9/04
3	REVISED PLAN, ELEVATION & SECTION VIEWS	RLF	9/04
4			

GENERAL NOTES

(2) ⬢ - Indicates AASHTO, AGC & ARTBA Task Force 13 Report designation

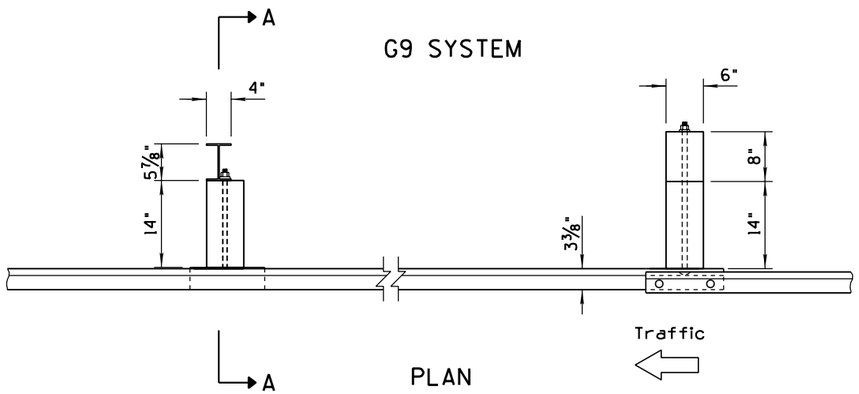

(3)

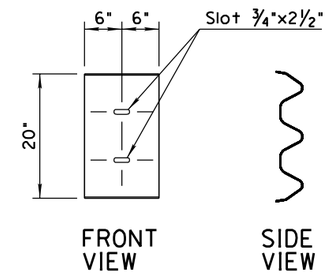

THRIE BEAM BACK-UP PLATE DETAIL

(3)

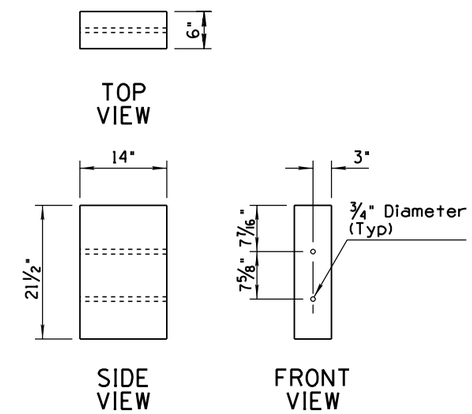

TIMBER BLOCK DETAIL

(3)

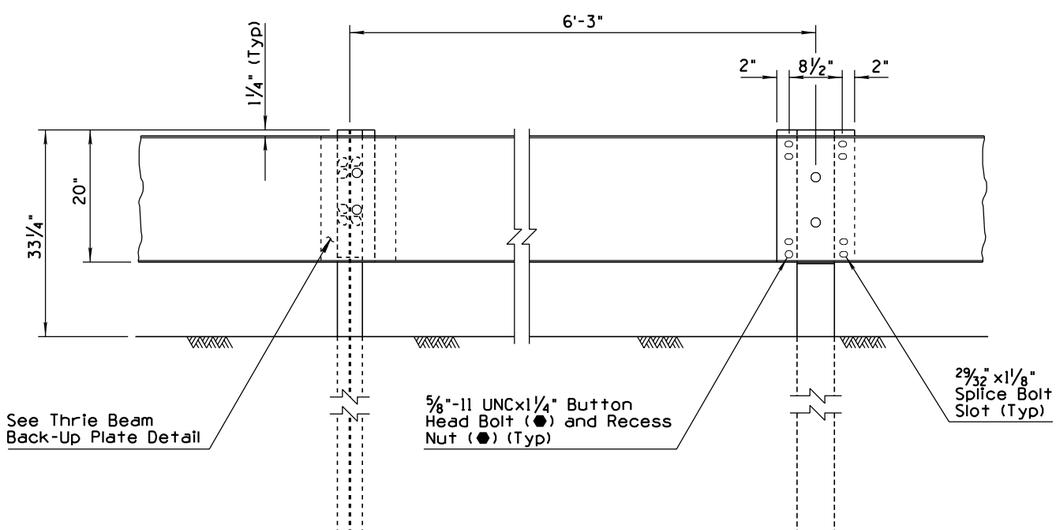

ELEVATION
G9 SYSTEM

(3)

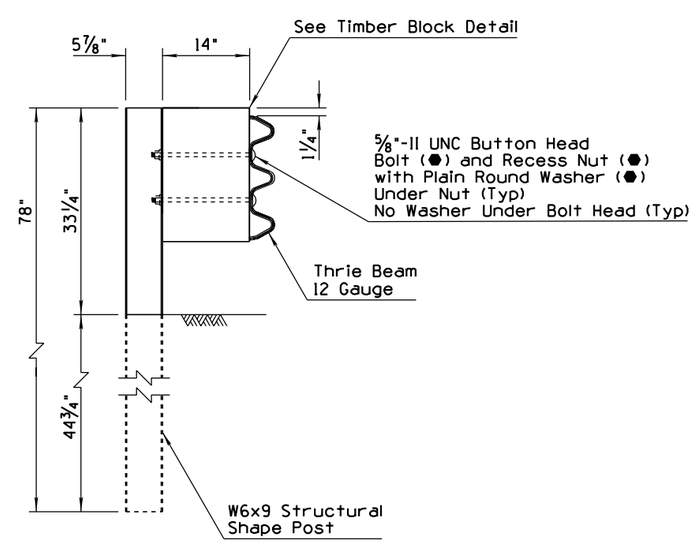

(G9) SECTION A-A

(3)

APPROVED FOR DESIGN	STATE OF ARIZONA DEPARTMENT OF TRANSPORTATION ROADWAY STANDARD DRAWINGS	REV.
Mary Viparina		9/04
APPROVED FOR DISTRIBUTION	THRIE-BEAM GUARDRAIL (1) G9 BLOCKED-OUT STEEL POST	DRAWING NO. (1) C-10.20

NO	DESCRIPTION OF REVISIONS	MADE BY	DATE
1	REMOVED (A325) REQUIREMENT	RLF	12/04
2	REVISED BARRIER TRANSITION CALLOUT	RLF	4/05
3	REISSUED AS STANDARD DRAWING C-10.30, SHEET 1 OF 2	RLF	4/05
4			

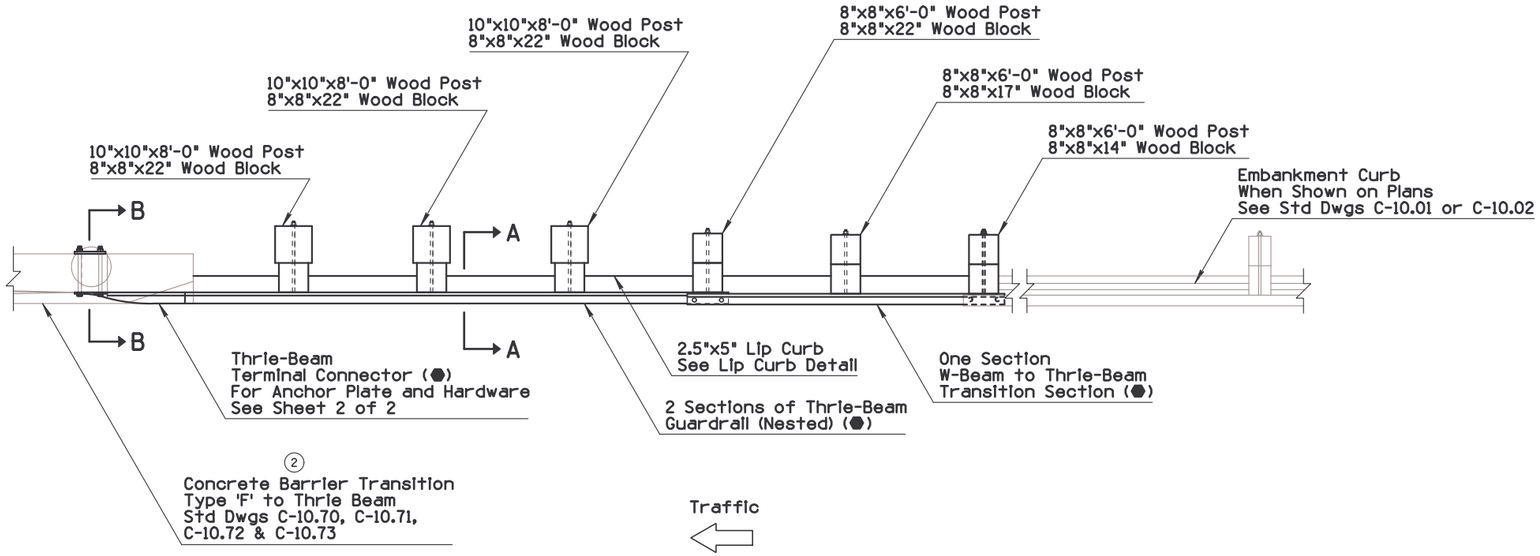

PLAN

GENERAL NOTES

1. Curbing is not required when drainage flows transversely away from barrier.
2. Treatment at back of lip curb modified for constructability purposes. Front slope and height of lip curb shall not be exceeded.
3. Thrie-beam terminal connector to thrie-beam splice shall be lapped in the direction of adjacent traffic.

● - Indicates AASHTO, AGC & ARTBA Task Force 13 Report designation

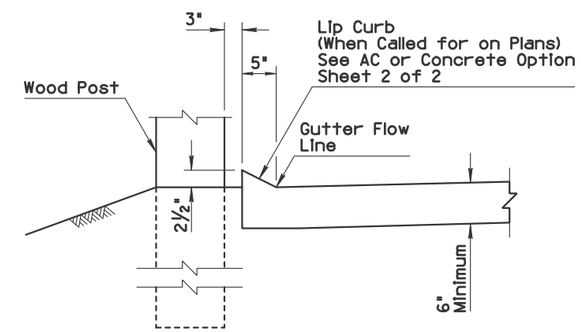

LIP CURB DETAIL

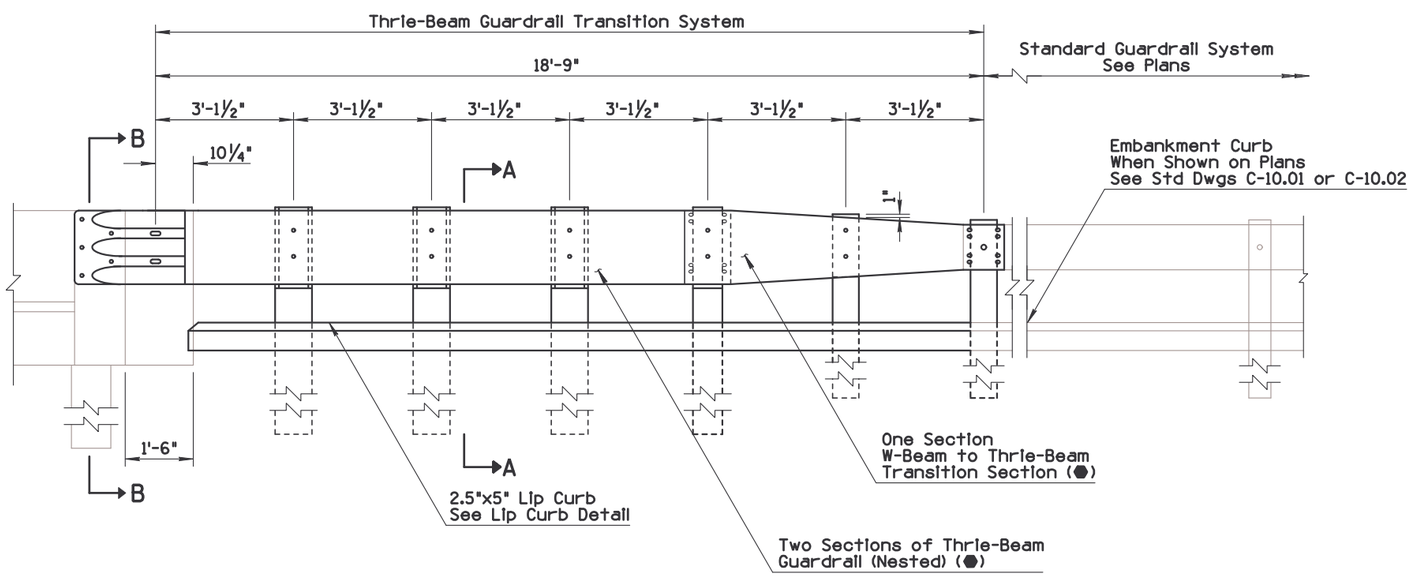

ELEVATION

APPROVED FOR DESIGN	STATE OF ARIZONA DEPARTMENT OF TRANSPORTATION ROADWAY STANDARD DRAWINGS	REV. 4/05
APPROVED FOR DISTRIBUTION	GUARDRAIL TRANSITION, THRIE BEAM TO CONCRETE HALF BARRIER 32" TYPE 'F'	DRAWING NO. 3 C-10.30 Sheet 1 of 2

NO	DESCRIPTION OF REVISIONS	MADE BY	DATE
1	NEW STANDARD DRAWING	RLF	4/05
2			
3			
4			

GENERAL NOTES

1. Anchor Plate shall conform to ASTM specification A36. Bolts, washers and Anchor Plate shall be galvanized or, at the contractors option, stainless steel bolts and washers may be used.
2. Two-inch deep contraction joints shall be placed in the curb and the gutter at locations which match the joints in adjacent PCCP and at approximate 15' centers when adjacent to AC pavement. Joints shall be either hand-tooled or sawn.

● - Indicates AASHTO, AGC & ARTBA Task Force 13 Report designation

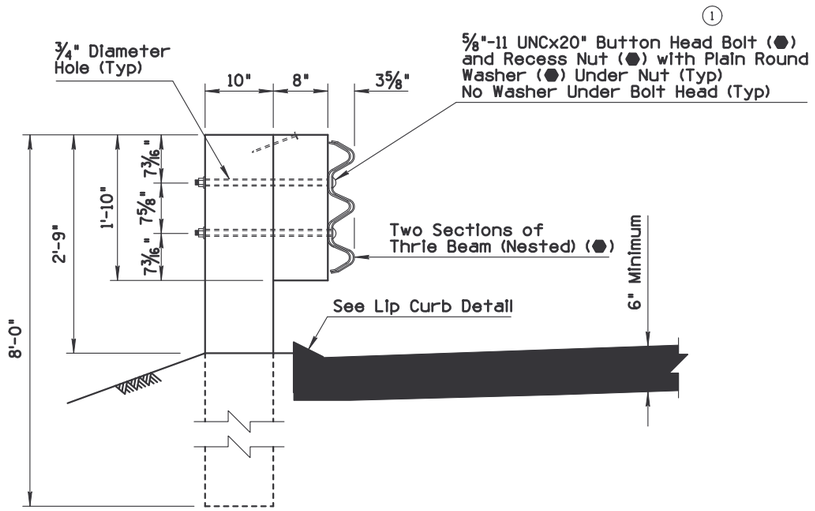

SECTION A-A
AC OPTION

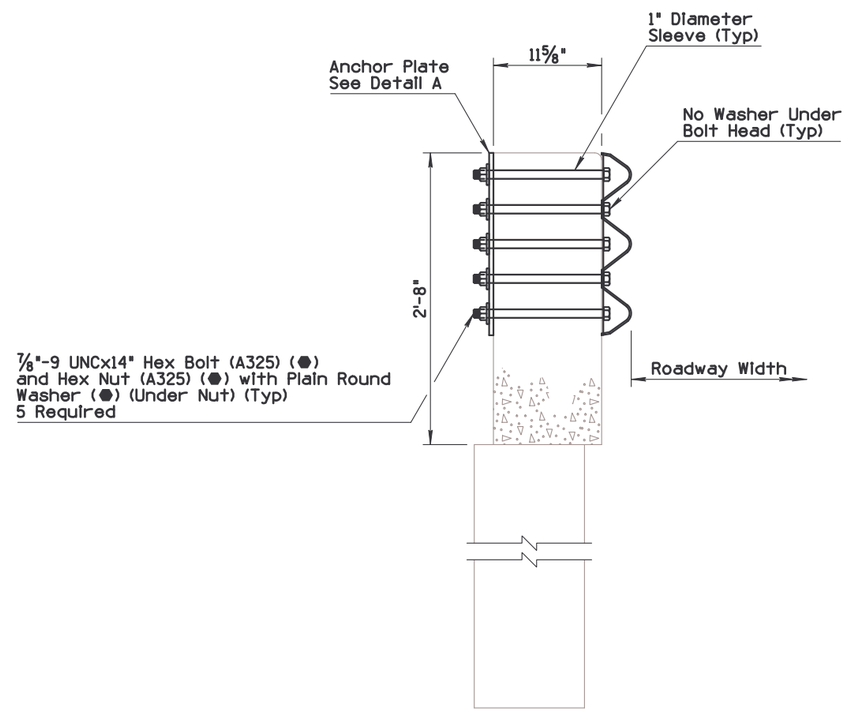

SECTION B-B

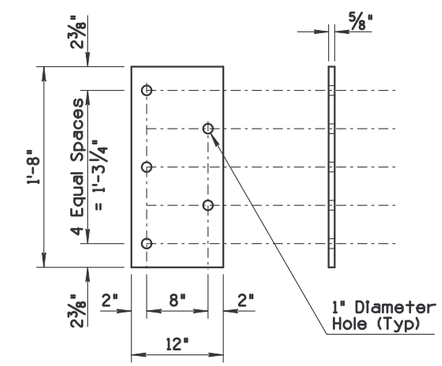

ANCHOR PLATE - DETAIL A

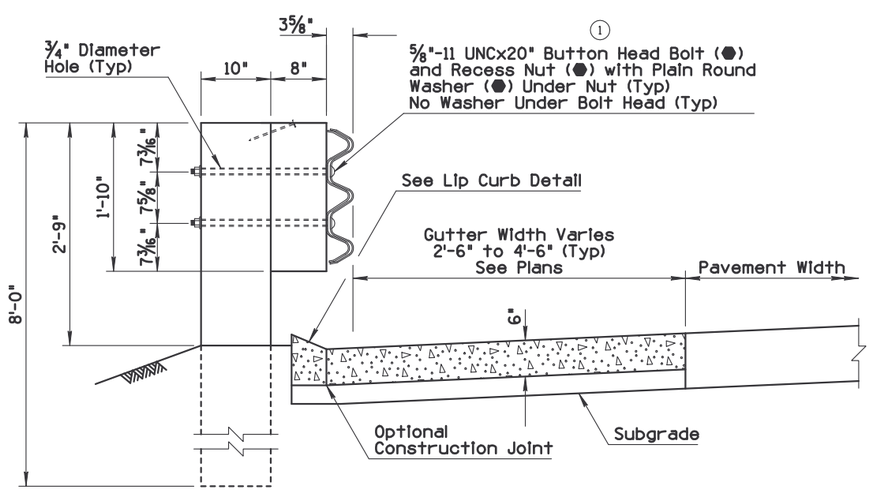

SECTION A-A
CONCRETE OPTION

APPROVED FOR DESIGN	STATE OF ARIZONA DEPARTMENT OF TRANSPORTATION ROADWAY STANDARD DRAWINGS	REV. 4/05
APPROVED FOR DISTRIBUTION	GUARDRAIL TRANSITION W-BEAM TO CONCRETE HALF BARRIER 32" TYPE 'F'	DRAWING NO. 1 C-10.30 Sheet 2 of 2

NO	DESCRIPTION OF REVISIONS	MADE BY	DATE
1	REVISED POST SIZES AND SPACING	RLF	9/04
2	ADDED NESTED THRIE BEAM REQUIREMENT	RLF	9/04
3	ADDED ANCHOR PLATE REFERENCE	RLF	9/04
4	ADDED (A325) REQUIREMENT	RLF	9/04

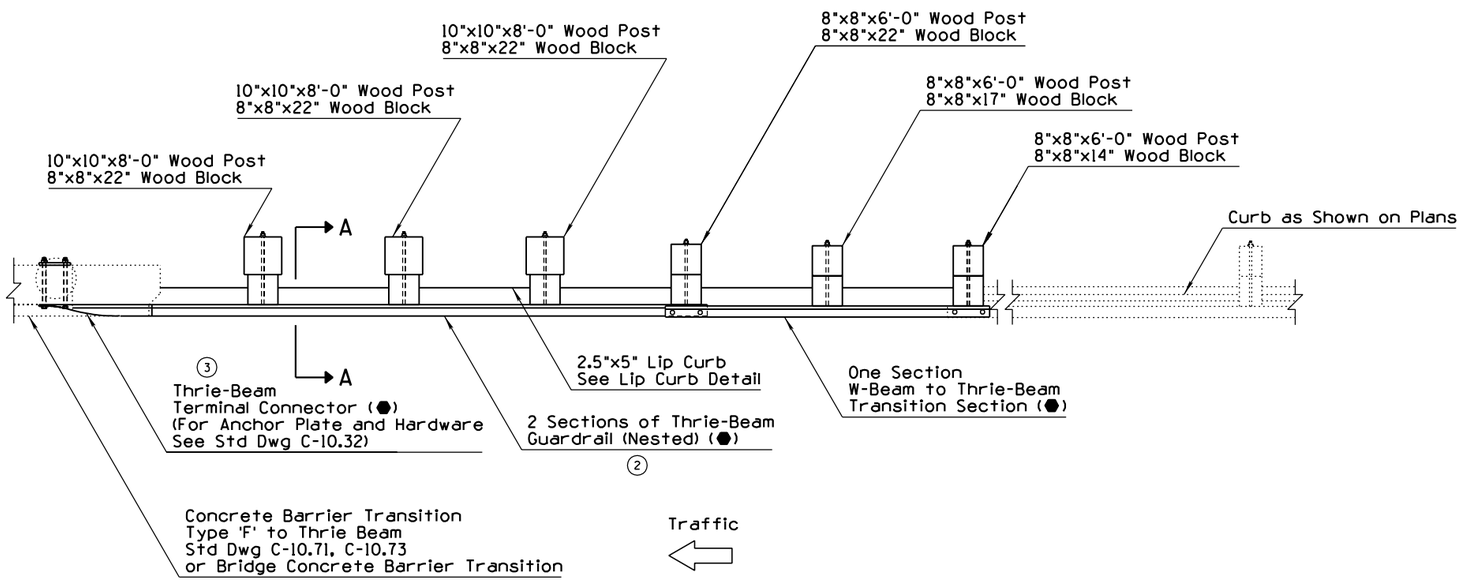

PLAN

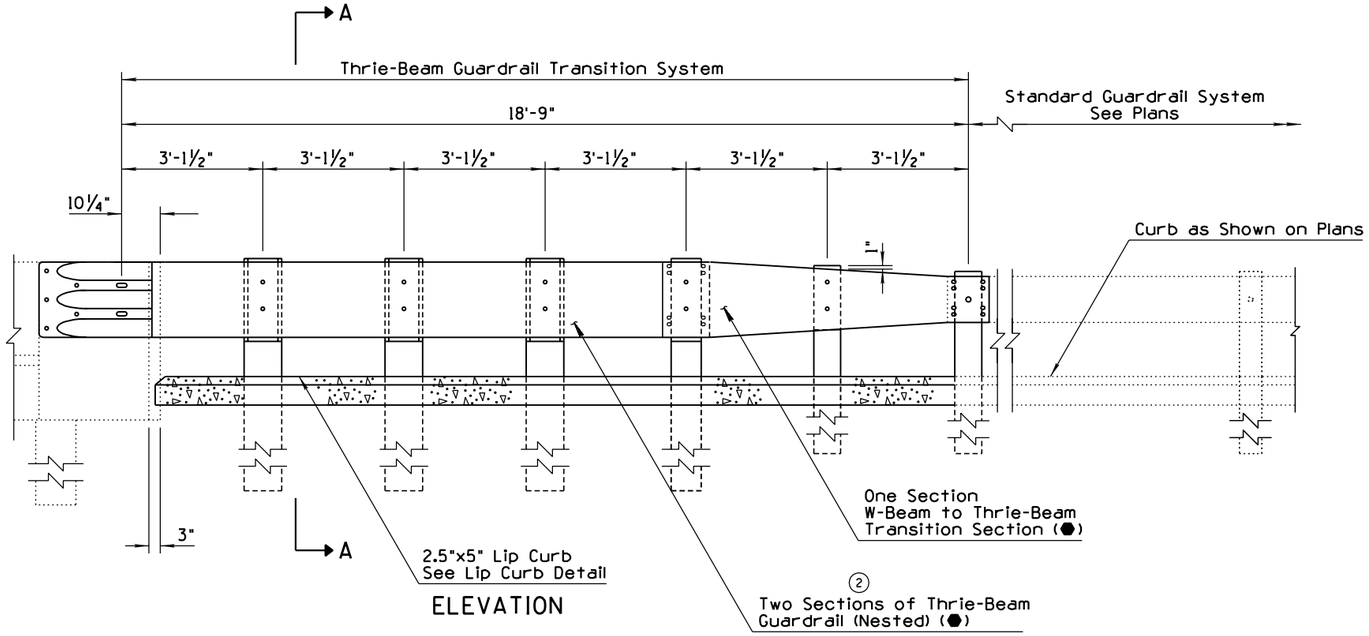

ELEVATION

GENERAL NOTES

1. Two-inch deep contraction joints shall be placed in the curb and the gutter at locations which match the joints in adjacent PCCP and at approximate 15' centers when adjacent to AC pavement. Joints shall be either hand tooled or sawn.
2. Curbing is not required when drainage flows transversely away from barrier.
3. Thrie-beam terminal connector to thrie-beam splice shall be lapped in the direction of adjacent traffic.

● - Indicates AASHTO, AGC & ARTBA Task Force 13 Report designation

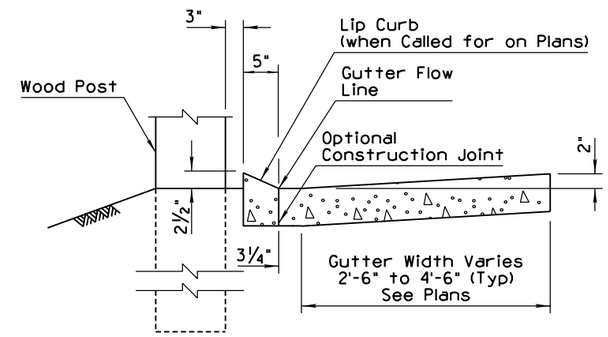

LIP CURB DETAIL

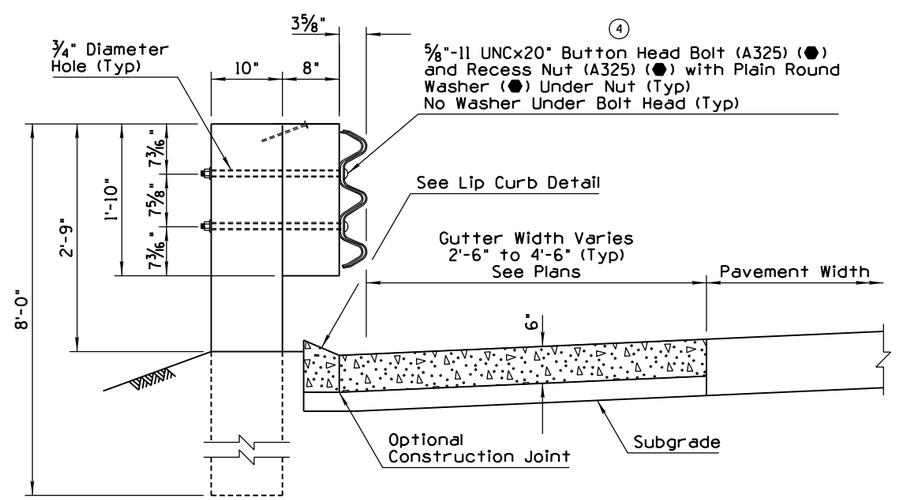

SECTION A-A ①

APPROVED FOR DESIGN	STATE OF ARIZONA DEPARTMENT OF TRANSPORTATION ROADWAY STANDARD DRAWINGS	REV.
APPROVED FOR DISTRIBUTION	GUARDRAIL TRANSITION, THRIE BEAM TO CONCRETE HALF BARRIER 32" TYPE 'F', (APPROACH), PCCP	9/04 DRAWING NO. C-10.31

NO	DESCRIPTION OF REVISIONS	MADE BY	DATE
1	REISSUED STANDARD DRAWING	RLF	9/04
2			
3			
4			

GENERAL NOTES

1. For use with one-way traffic or with two-way traffic outside the clear zone.
2. Thrie-beam terminal connector to thrie-beam splice shall be lapped in the direction of adjacent traffic.
3. Anchor Plate shall conform to ASTM specification A36. Bolts, washers and Anchor Plate shall be galvanized or, at the contractors option, stainless steel bolts and washers may be used.

● - Indicates AASHTO, AGC & ARTBA Task Force 13 Report designation

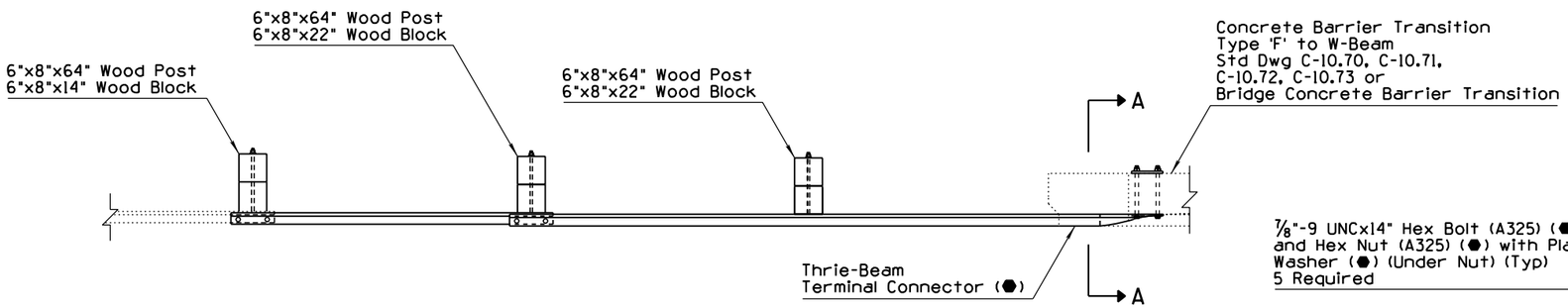

PLAN

Traffic

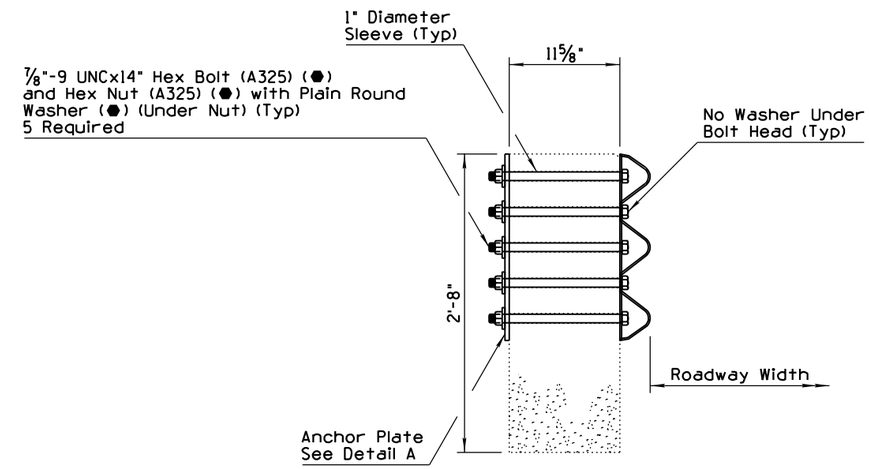

SECTION A-A

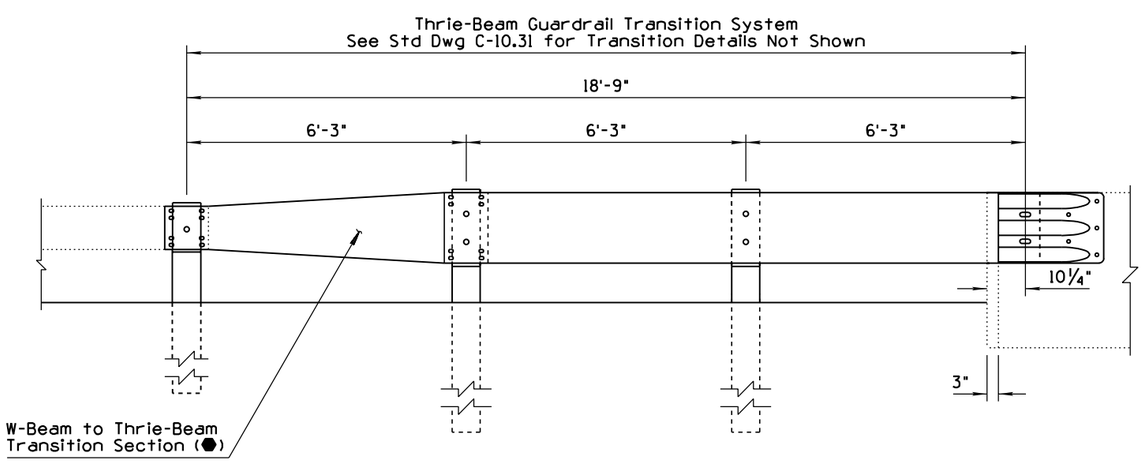

ELEVATION

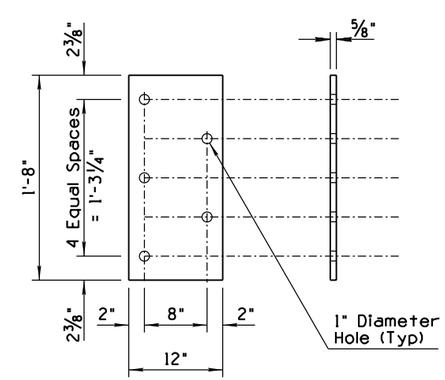

ANCHOR PLATE - DETAIL A

APPROVED FOR DESIGN	STATE OF ARIZONA DEPARTMENT OF TRANSPORTATION ROADWAY STANDARD DRAWINGS	REV.
		9/04
APPROVED FOR DISTRIBUTION	GUARDRAIL TRANSITION W-BEAM TO CONCRETE HALF-BARRIER 32" TYPE 'F', (DEPARTURE)	DRAWING NO. C-10.32 ①

NO	DESCRIPTION OF REVISIONS	MADE BY	DATE
1	RENAMED STD DWG C-10.66 & REVISED TITLE	RLF	9/04
2	REVISED GENERAL NOTE 3	RLF	9/04
3	RELOCATED # 4 REBARS	RLF	9/04
4			

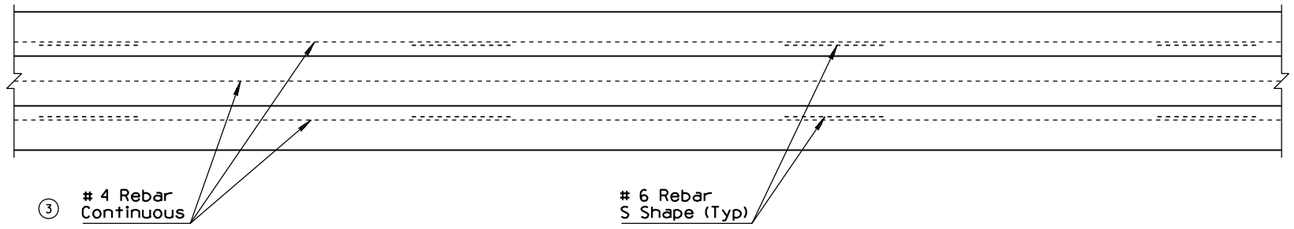

PLAN

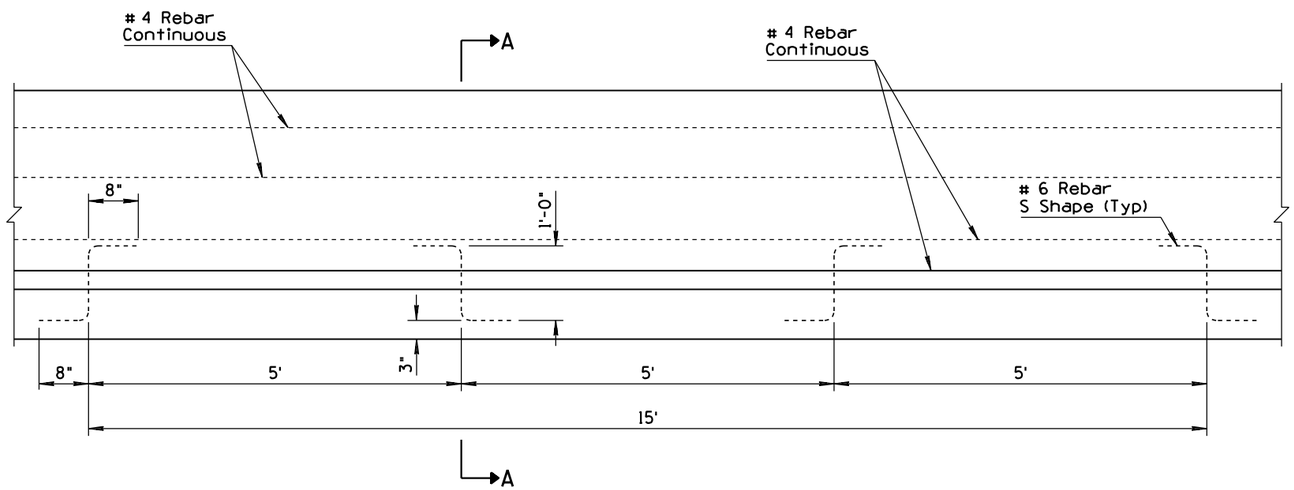

ELEVATION

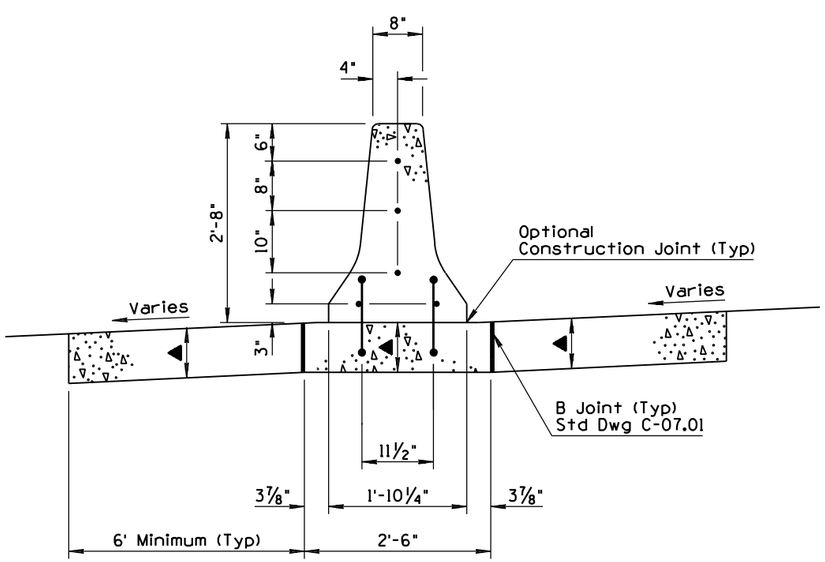

WITH PCCP
SECTION A-A ③

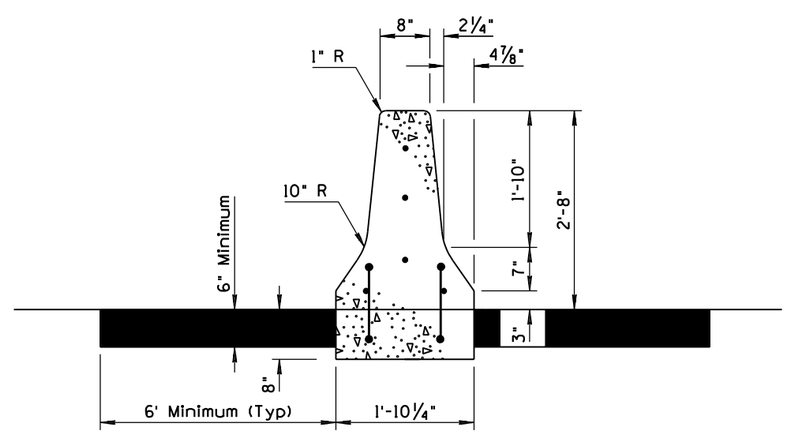

WITH AC
SECTION A-A
③

GENERAL NOTES

1. Median Barrier shall be constructed by the slip form or formed cast-in-place method.
2. When obstacles prevent the use of slip form equipment, stationary forms shall be used.
3. ② Concrete shall be Class S, f'_c=4000 PSI.
4. If the footing and barrier are cast monolithically, #6 S shape rebars are not required.
5. Barrier width shall not exceed the barrier footing width nor overhang the adjacent pavement.
6. # 4 Rebar shall extend 12" past the construction joint at the completion of the day's pour.

▲ Depth to match adjacent PCCP thickness (8" minimum).

APPROVED FOR DESIGN	STATE OF ARIZONA DEPARTMENT OF TRANSPORTATION ROADWAY STANDARD DRAWINGS	REV.
		9/04
APPROVED FOR DISTRIBUTION	CONCRETE MEDIAN BARRIER ① 32" TYPE 'F' CAST-IN-PLACE	DRAWING NO. ① C-10.40

NO	DESCRIPTION OF REVISIONS	MADE BY	DATE
1	RENAMED STD DWG FROM C-10.67 & REVISED TITLE	RLF	9/04
2	REVISED GENERAL NOTE 3	RLF	9/04
3	RELOCATED # 4 REBARS	RLF	9/04
4			

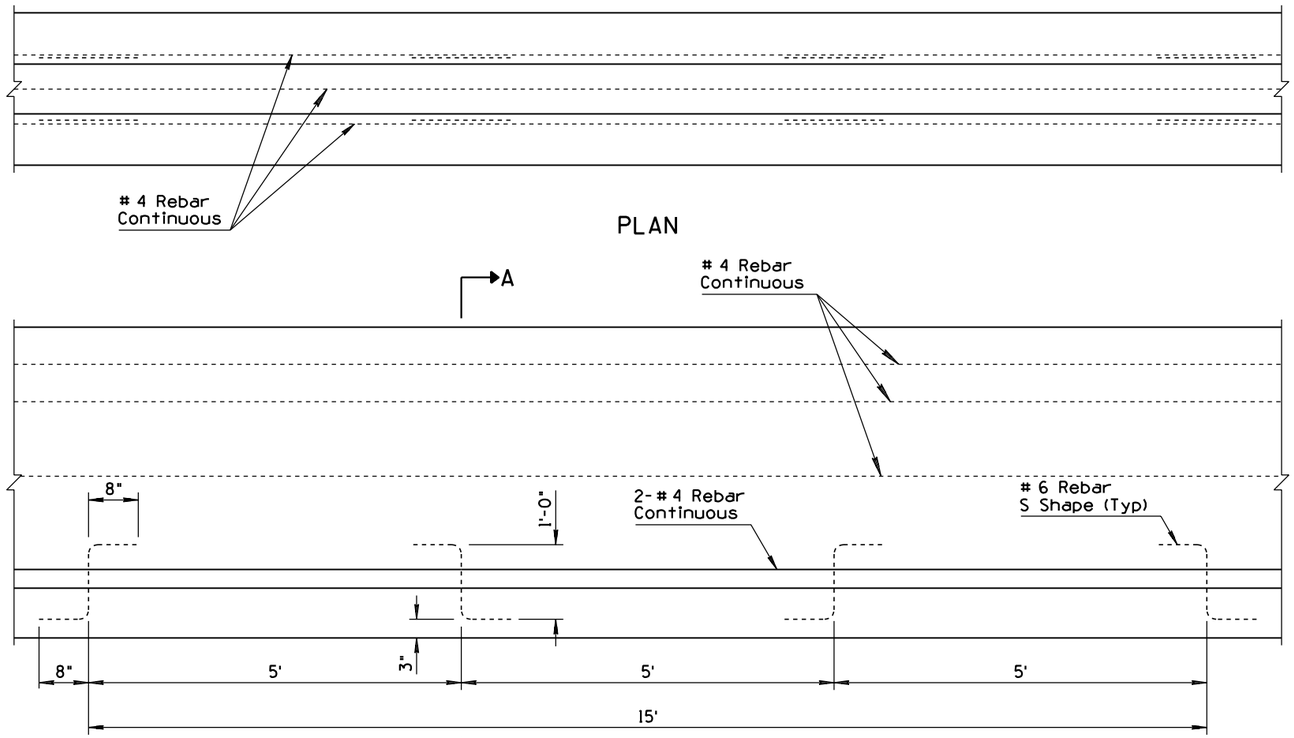

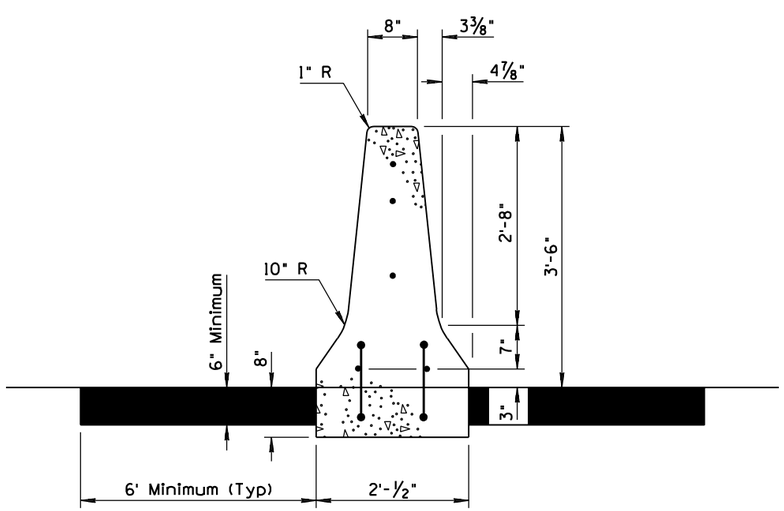

WITH AC
SECTION A-A ③

GENERAL NOTES

1. Median Barrier shall be constructed by the slip form or by the formed cast-in-place method.
2. When obstacles prevent the use of slip form equipment, stationary forms shall be used.
3. ② Concrete shall be Class S, f'_c=4000 PSI.
4. If the footing and barrier are cast monolithically, # 6 S shape rebars are not required.
5. Barrier width shall not exceed the barrier footing width nor overhang the adjacent pavement.
6. # 4 rebar shall extend 12" past the construction joint at the completion of the day's pour.

▲ Depth to match adjacent PCCP thickness (8" minimum).

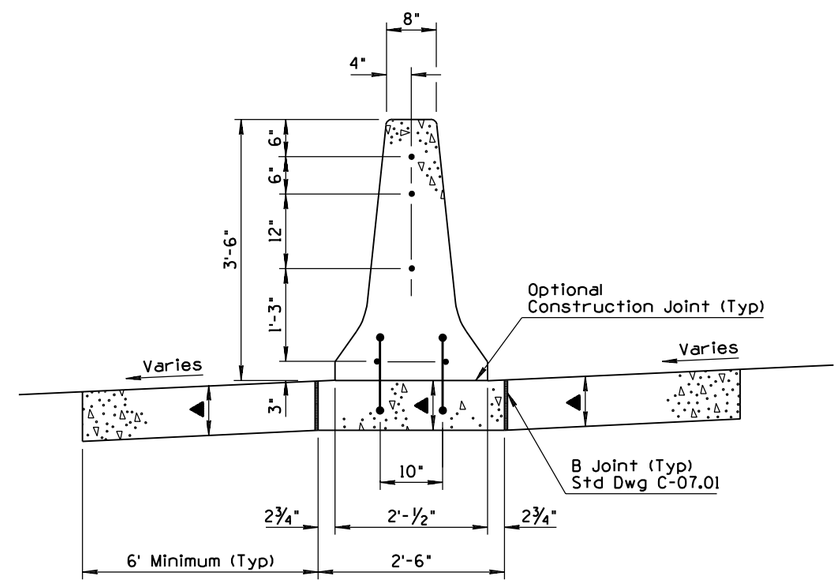

WITH PCCP
SECTION A-A ③

APPROVED FOR DESIGN	STATE OF ARIZONA DEPARTMENT OF TRANSPORTATION ROADWAY STANDARD DRAWINGS	REV.
Mary Viparina		9/04
APPROVED FOR DISTRIBUTION	CONCRETE MEDIAN BARRIER ① 42" TYPE 'F' CAST-IN-PLACE	DRAWING NO. ① C-10.41

NO	DESCRIPTION OF REVISIONS	MADE BY	DATE
1	RENAMED STANDARD DRAWING FROM C-10.97, SHEET 1 OF 3	RLF	10/04
2			
3			
4			

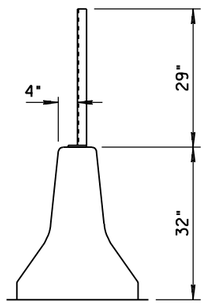

GLARE SCREEN
INSTALLATION ON
STANDARD MEDIAN BARRIER

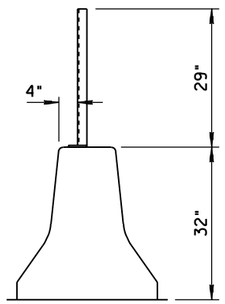

GLARE SCREEN
INSTALLATION ON
MEDIAN BARRIER TRANSITION

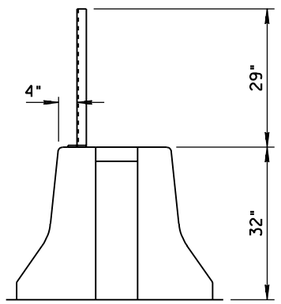

GLARE SCREEN
INSTALLATION ON
HALF BARRIER AT BRIDGE PIER

GENERAL NOTES

1. Posts shall be 12'-6" Center to Center. Structural steel shall conform to ASTM A36, galvanized in conformance with ASTM A123.
2. Hex head bolt shall conform to ASTM A307, galvanized in conformance with ASTM A153 Class C.
3. Helical spring lock washer shall conform to ASTM A313, galvanized in conformance with ASTM A153 Class C.
4. Tension wire: AWG number 9(0.148") galvanized in conformance with ASTM A116 Class 2.
5. Hog ring: AWG number 12 (0.105") galvanized in conformance with ASTM A116 Class 2. Fasten glare screen to top and bottom tension wire spaced approximately 2' apart.
6. Glare Screen: 18 gauge steel. ASTM A526, galvanized in accordance with ASTM A525/(G235), expanded to the following dimensions: 1.33" shortway of diamond and 4.0" longway of diamond (center to center of bridges) with a strand width of 0.250" angled at approximately 20° to the plane of the original sheet. Top edge to be shop curled and crimped on 12" center to center. Glare screen shall be installed such that flat portion of screen blocks light from headlights. See Direction Detail.
7. Splices allowed in glare screen at posts only, with one full diamond overlap.
8. Glare screen shall be constructed without interruption to the greatest degree possible.

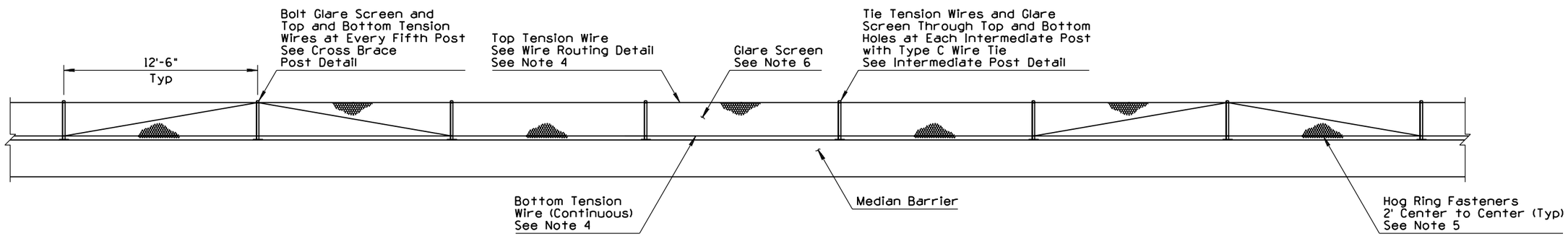

ELEVATION

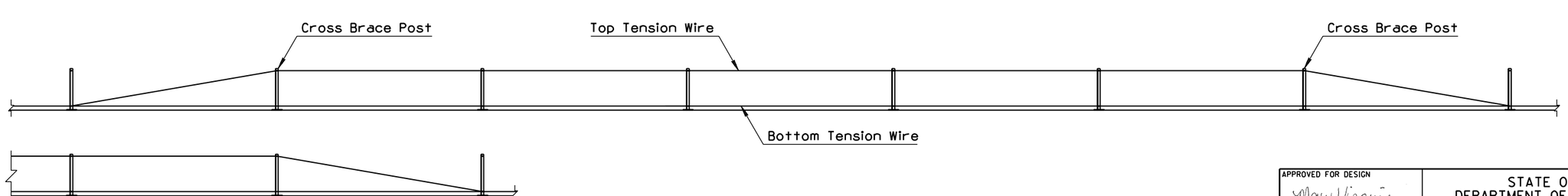

TENSION WIRE ROUTING DETAIL

APPROVED FOR DESIGN	STATE OF ARIZONA DEPARTMENT OF TRANSPORTATION ROADWAY STANDARD DRAWINGS	REV.
Mary Viparina		10/04
APPROVED FOR DISTRIBUTION	(1) GLARE SCREEN CONCRETE MEDIAN BARRIER	DRAWING NO. (1) C-10.42 Sheet 1 of 3

NO	DESCRIPTION OF REVISIONS	MADE BY	DATE
1	RENAMED FROM STANDARD DRAWING C-10.97, SHEET 2 OF 3	RLF	9/04
2			
3			
4			

① ● - Indicates AASHTO, AGC & ARTBA Task Force 13 Report designation

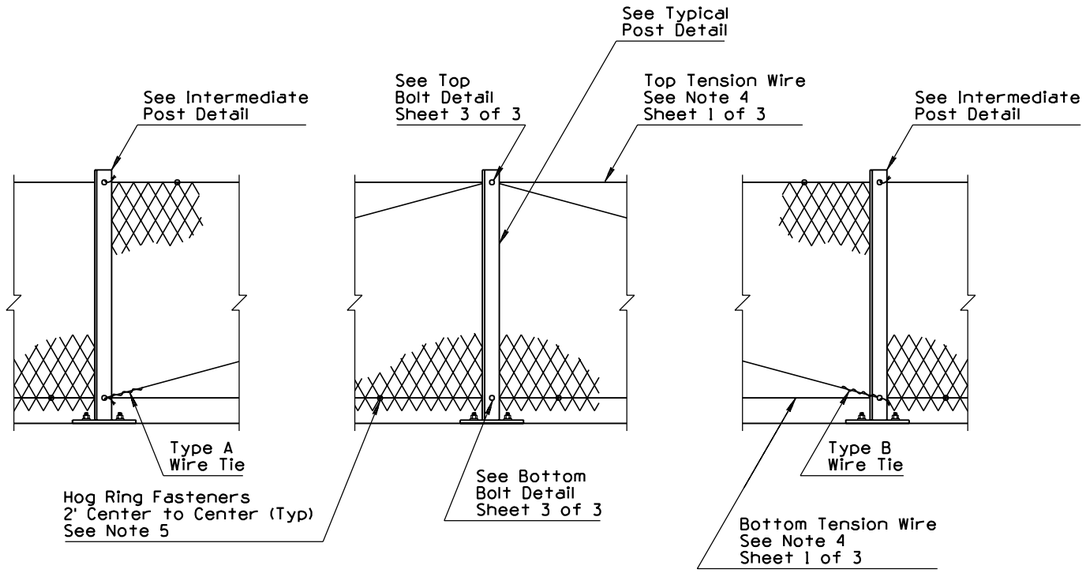

CROSS BRACE POST DETAIL

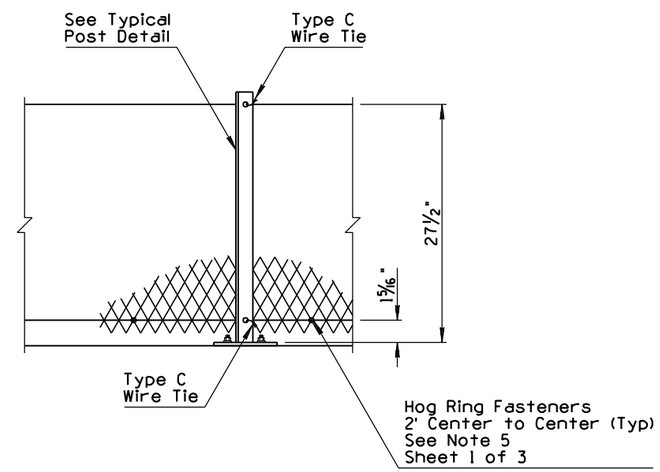

INTERMEDIATE POST DETAIL

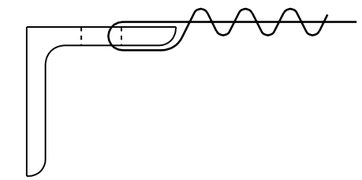

TYPE A WIRE TIE

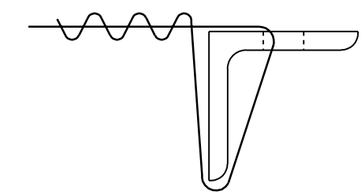

TYPE B WIRE TIE

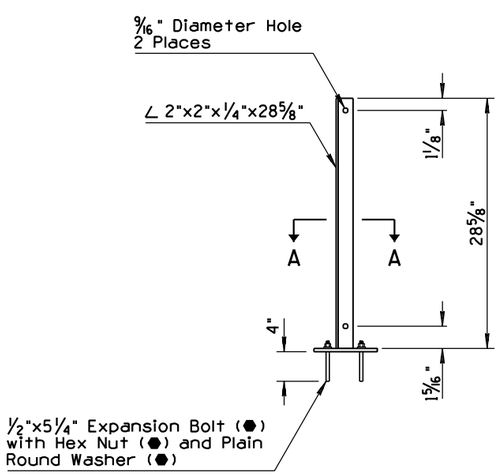

TYPICAL POST DETAIL

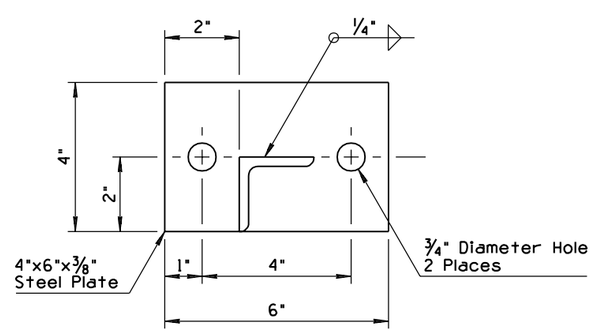

SECTION A-A

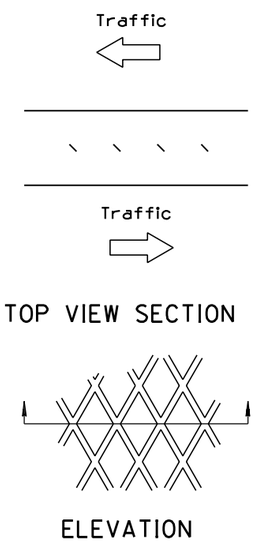

TOP VIEW SECTION

ELEVATION

DIRECTION DETAIL

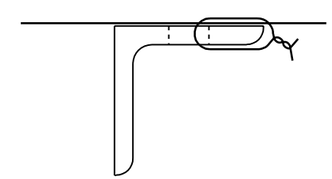

TYPE C WIRE TIE

APPROVED FOR DESIGN	STATE OF ARIZONA DEPARTMENT OF TRANSPORTATION ROADWAY STANDARD DRAWINGS	REV. 9/04
APPROVED FOR DISTRIBUTION	GLARE SCREEN CONCRETE MEDIAN BARRIER	DRAWING NO. C-10.42 ① Sheet 2 of 3

NO	DESCRIPTION OF REVISIONS	MADE BY	DATE
1	RENAMES STANDARD DRAWING FROM C-10.97, SHEET 3 OF 3	RLF	9/04
2			
3			
4			

① ● - Indicates AASHTO, AGC & ARTBA Task Force 13 Report designation

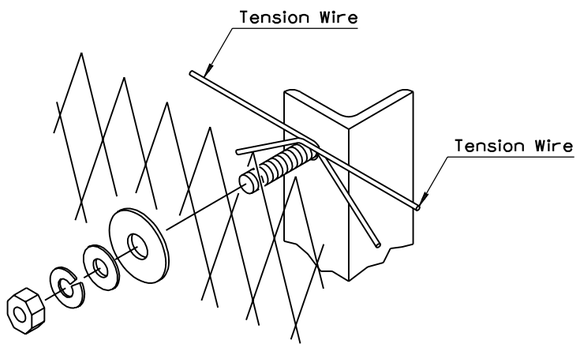

TOP BOLT DETAIL

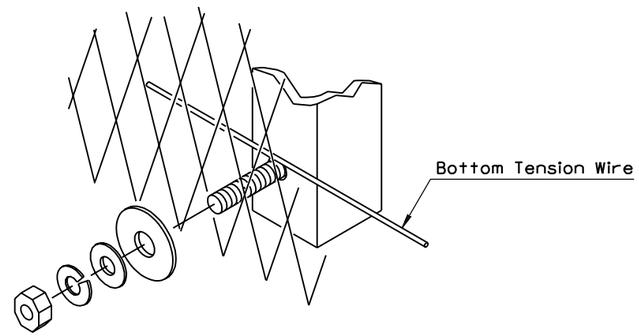

BOTTOM BOLT DETAIL

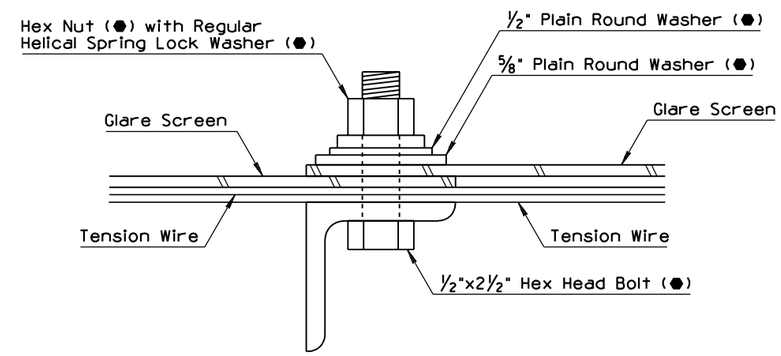

TOP BOLT SECTION

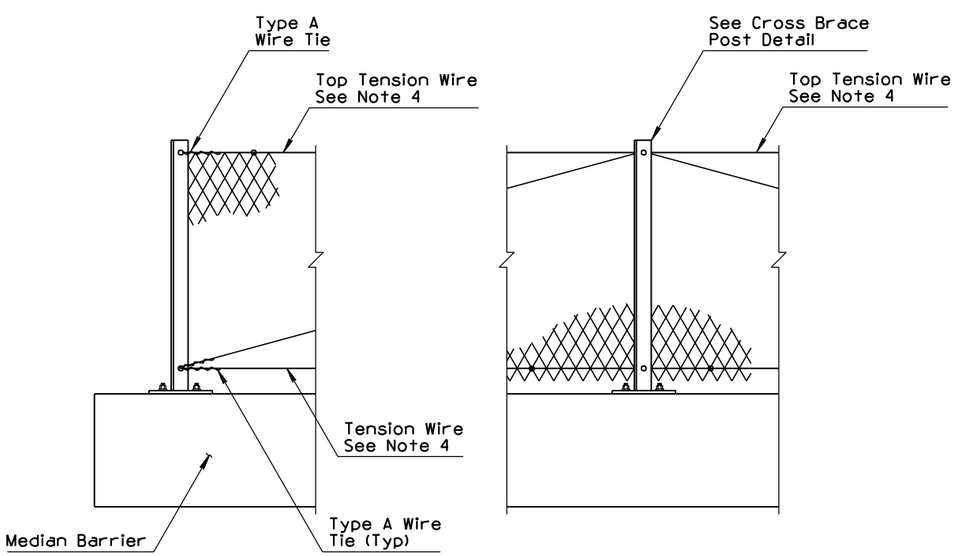

TERMINATION DETAIL

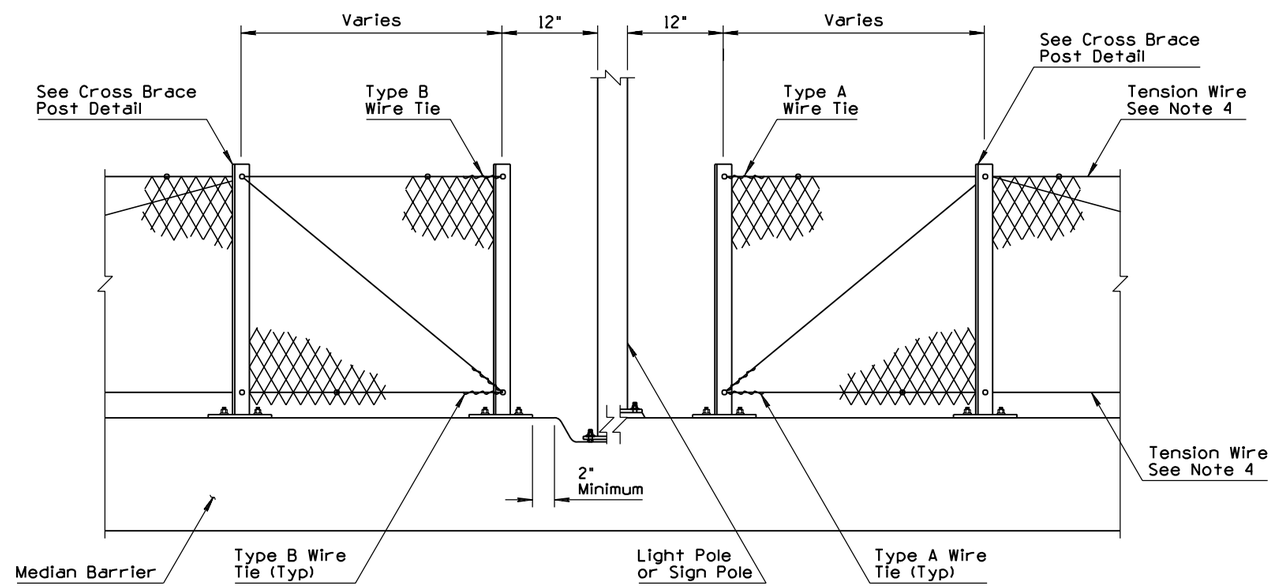

OBSTRUCTION DETAIL

APPROVED FOR DESIGN	STATE OF ARIZONA DEPARTMENT OF TRANSPORTATION ROADWAY STANDARD DRAWINGS	REV.
		9/04
APPROVED FOR DISTRIBUTION	GLARE SCREEN CONCRETE MEDIAN BARRIER	DRAWING NO. ① C-10.42 Sheet 3 of 3

NO	DESCRIPTION OF REVISIONS	MADE BY	DATE
1	RENAMED STD DWG FROM C-10.60 & REVISED TITLE	RLF	9/04
2			
3			
4			

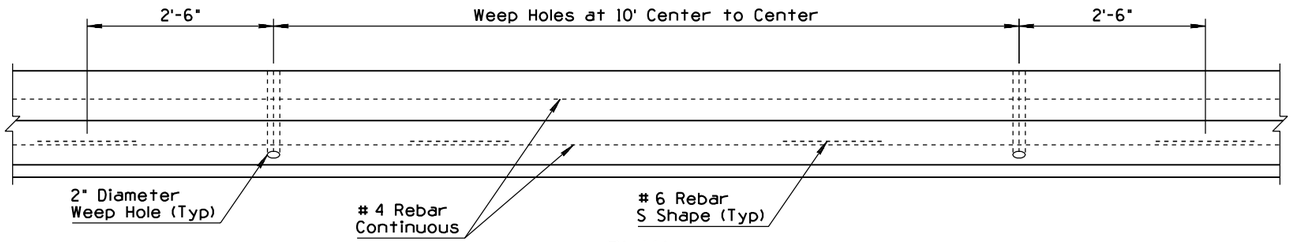

PLAN

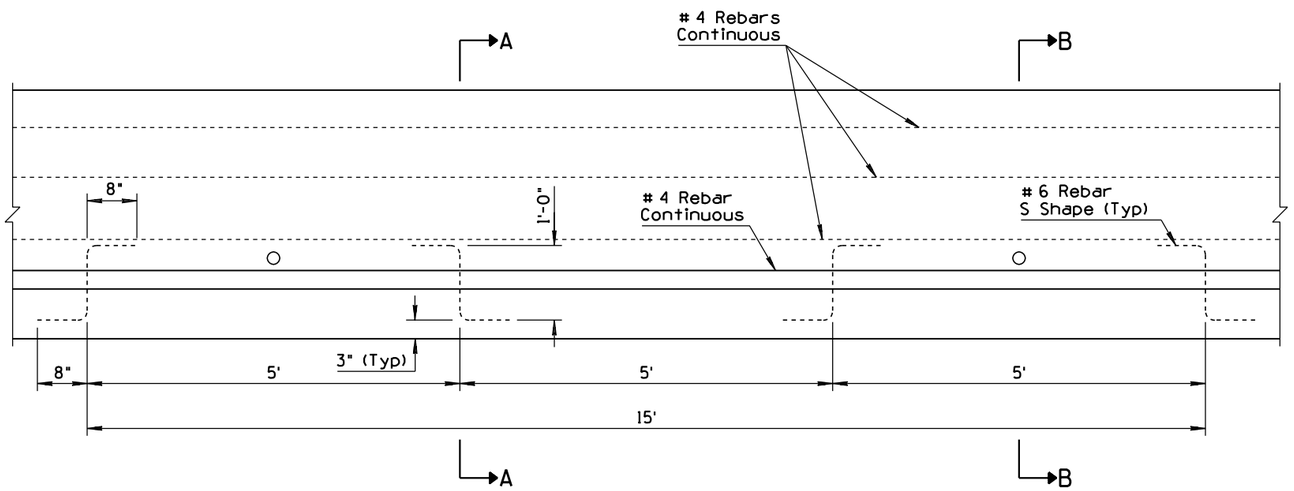

ELEVATION

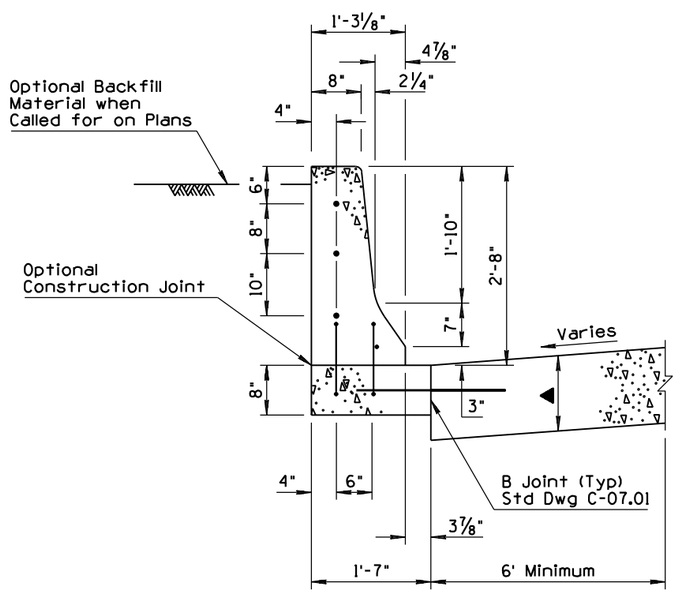

WITH PCCP
SECTION A-A

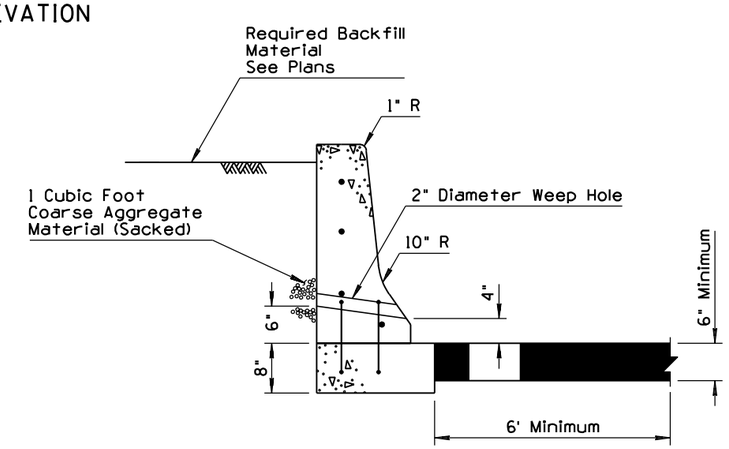

WITH AC
SECTION B-B
SEE SECTION A-A FOR
TYPICAL REBAR PLACEMENT

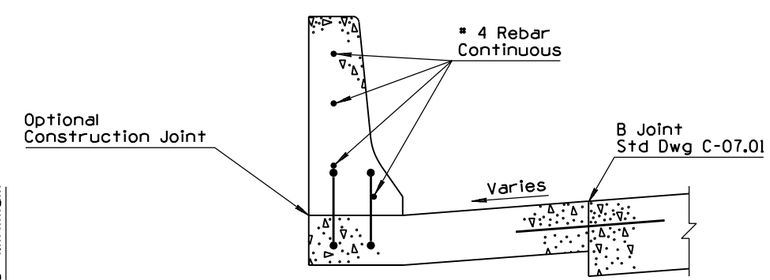

WITH PCCP
BARRIER WITH GUTTER
(SEE STD DWG C-10.52)

GENERAL NOTES

1. Half Barrier shall be constructed by the slip or fixed form method.
2. When obstacles prevent the use of slip form equipment, stationary forms shall be used.
3. Concrete shall be Class S, f'_c=4000 PSI.
4. If the footing and barrier are cast monolithically, # 6 S shape rebar will not be required.
5. # 4 rebar shall extend 12" past the construction joint at the completion of the day's pour.
6. Weep holes shall be placed whenever barrier is backfilled unless otherwise indicated on the plans.

▲ Depth to match adjacent PCCP thickness (8" Minimum).

APPROVED FOR DESIGN	STATE OF ARIZONA DEPARTMENT OF TRANSPORTATION ROADWAY STANDARD DRAWINGS	REV.
		9/04
APPROVED FOR DISTRIBUTION	CONCRETE HALF BARRIER (1) 32" TYPE 'F' CAST-IN-PLACE	DRAWING NO. (1) C-10.50 Sheet 1 of 2

NO	DESCRIPTION OF REVISIONS	MADE BY	DATE
1	RENAMED STD DWG FROM C-10.61 TO C-10.50 & REVISED TITLE	RLF	9/04
2			
3			
4			

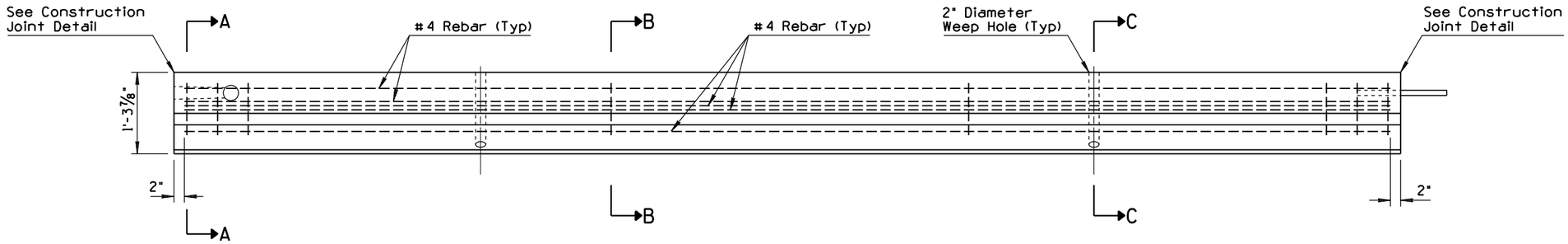

PLAN

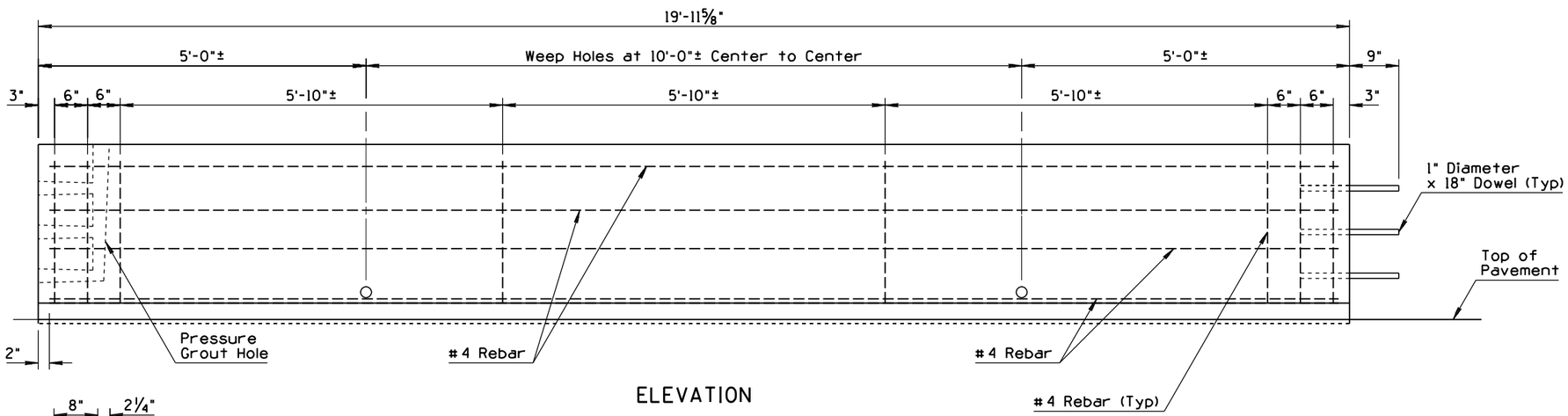

ELEVATION

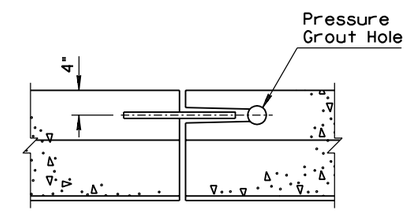

PLAN

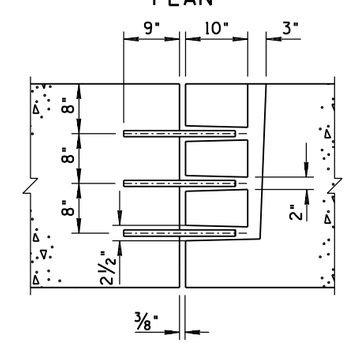

ELEVATION
CONSTRUCTION JOINT DETAIL

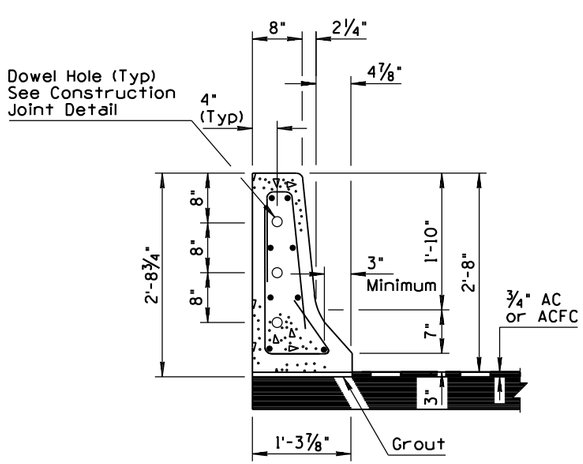

SECTION A-A

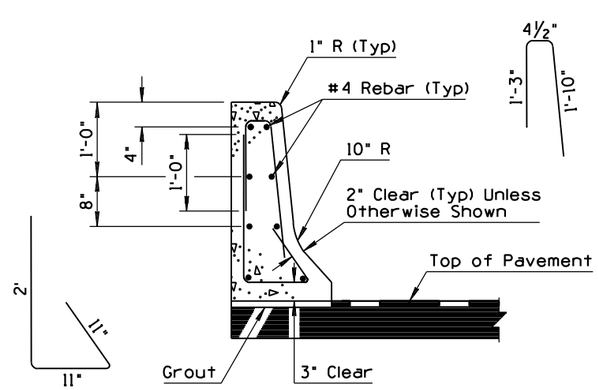

AT REBAR
SECTION B-B
SEE SECTION A-A FOR
TYPICAL REBAR PLACEMENT

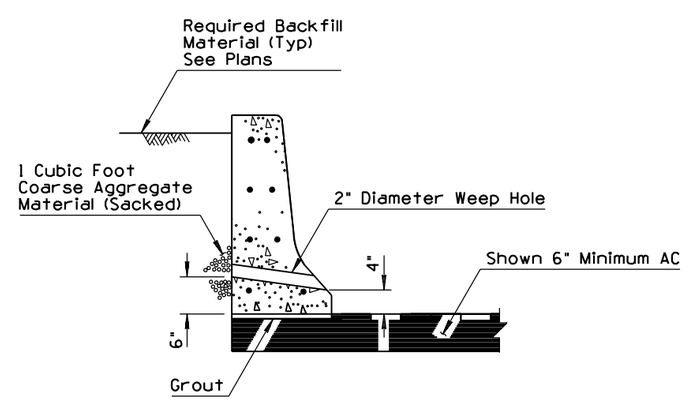

AT WEEP HOLE
SECTION C-C
SEE SECTION A-A FOR
TYPICAL REBAR PLACEMENT

GENERAL NOTES

1. Concrete Half Barrier shall be precast.
2. Concrete shall be Class S, f'_c=4000 PSI.
3. Pavement thickness adjacent to Half Barrier shall be ¾" minimum.
4. The Half Barrier shall be placed upon a bed of grout in order to provide a uniform bearing.
5. Doweled joints shall be grouted under pressure until all of the openings and the joints are filled.
6. All bend dimensions for rebar are out-to-out of rebars.
7. Weep holes shall be placed whenever Half Barrier is backfilled unless otherwise indicated on the plans.

APPROVED FOR DESIGN	STATE OF ARIZONA DEPARTMENT OF TRANSPORTATION ROADWAY STANDARD DRAWINGS	REV. 9/04
APPROVED FOR DISTRIBUTION	CONCRETE HALF BARRIER 32" TYPE 'F' PRECAST (1)	DRAWING NO. (1) C-10.50 Sheet 2 of 2

NO	DESCRIPTION OF REVISIONS	MADE BY	DATE
1	RENAMED STD DWG FROM C-10.65 & REVISED TITLE	RLF	9/04
2	ADDED B JOINT CALLOUT	RLF	9/04
3	REVISED DIMENSION	RLF	9/04
4	MODIFIED SECTION B-B	RLF	9/04

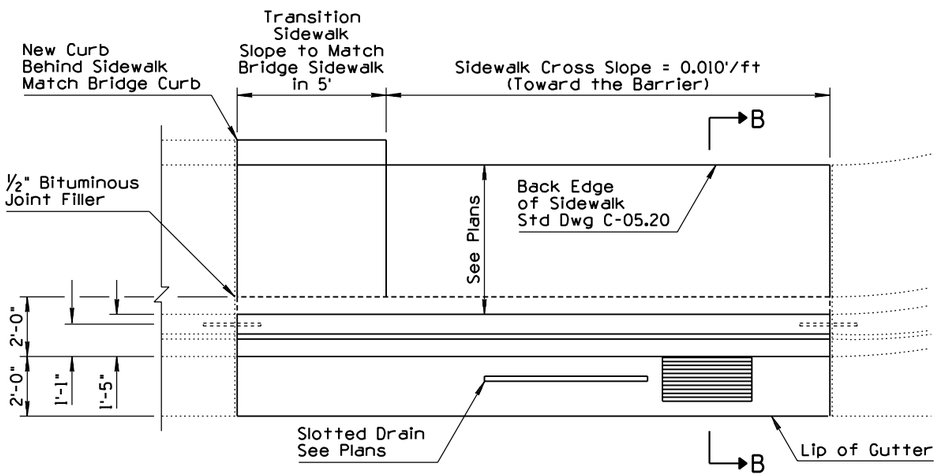

PLAN VIEW

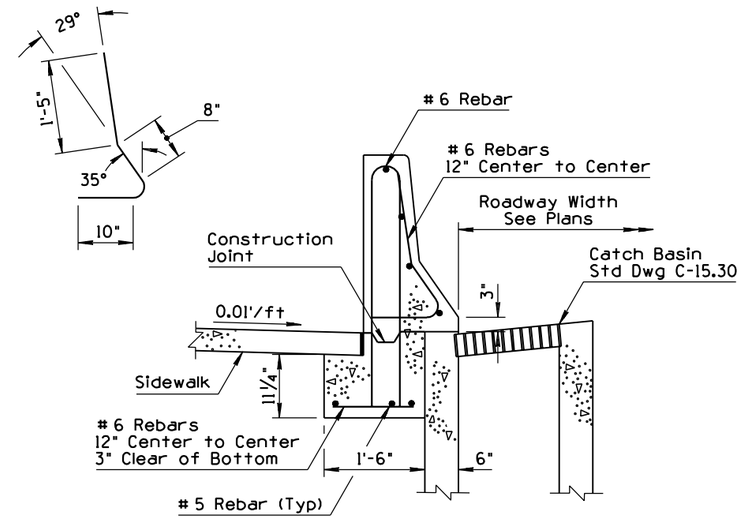

SECTION B-B
AT CATCH BASINS (4)

GENERAL NOTES

1. Concrete shall be Class S, f'c=4000 PSI.
2. Rebar shall conform to Std Spec 1003.
3. Rebar shall have 2" minimum clear cover unless otherwise noted.
4. See drainage sheets for slotted drain and catch basin details.
5. Departure termination may be substituted for Std Dwg C-10.76 barrier transition under departure conditions.
6. See Std Dwg C-05.20 for sidewalk construction.
7. All bend dimensions for rebar are out-to-out of rebars.

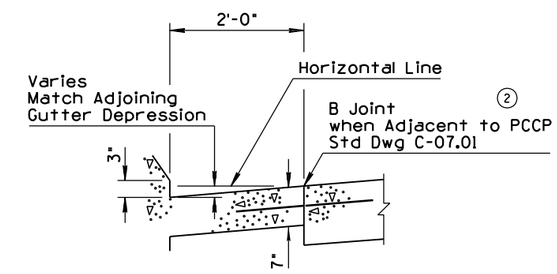

BARRIER GUTTER DETAIL

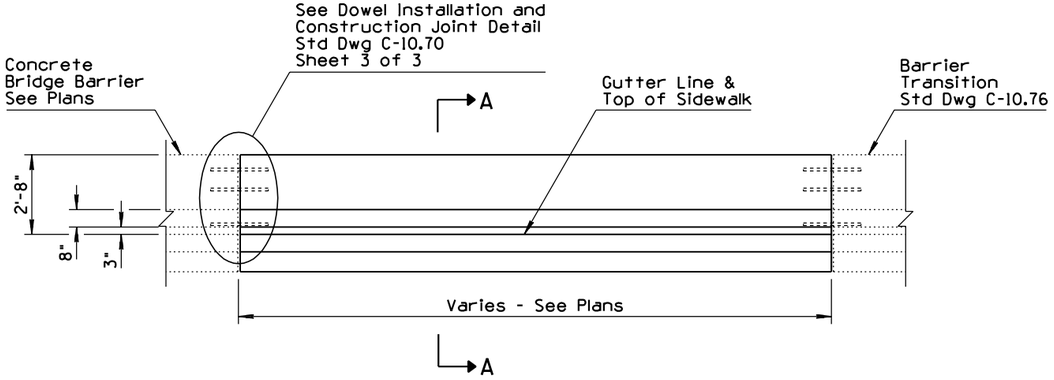

ELEVATION

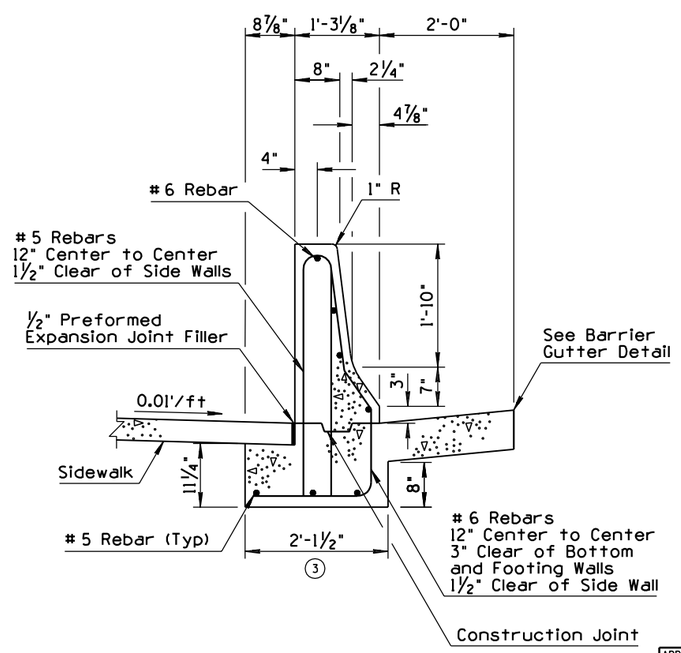

SECTION A-A

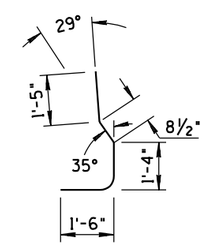

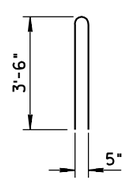

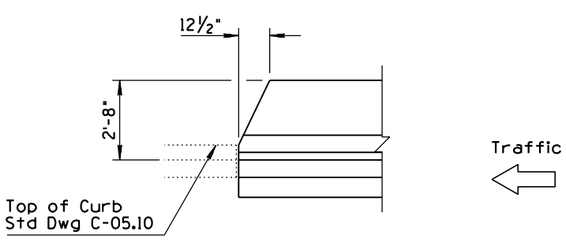

ELEVATION
DEPARTURE TERMINATION DETAIL

APPROVED FOR DESIGN	STATE OF ARIZONA DEPARTMENT OF TRANSPORTATION ROADWAY STANDARD DRAWINGS	REV.
		9/04
APPROVED FOR DISTRIBUTION	CONCRETE HALF BARRIER (1) 32' TYPE 'F' WITH SIDEWALK	DRAWING NO. (1) C-10.51

NO	DESCRIPTION OF REVISIONS	MADE BY	DATE
1	RENAMED STD DWG FROM C-10.62 TO C-10.52 & REVISED TITLE	RLF	9/04
2	ADDED GENERAL NOTE 9	RLF	9/04
3	REVISED GENERAL NOTE 3	RLF	9/04
4			

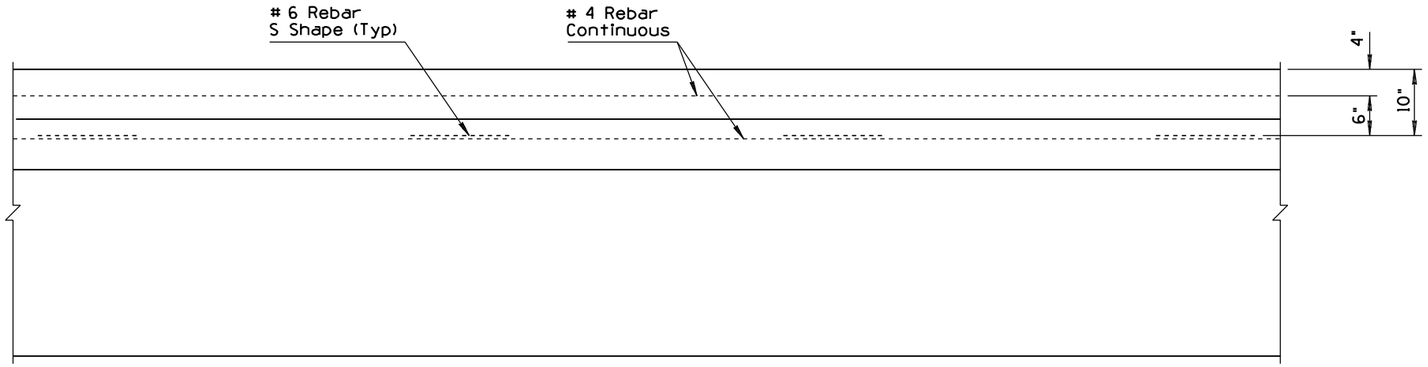

PLAN

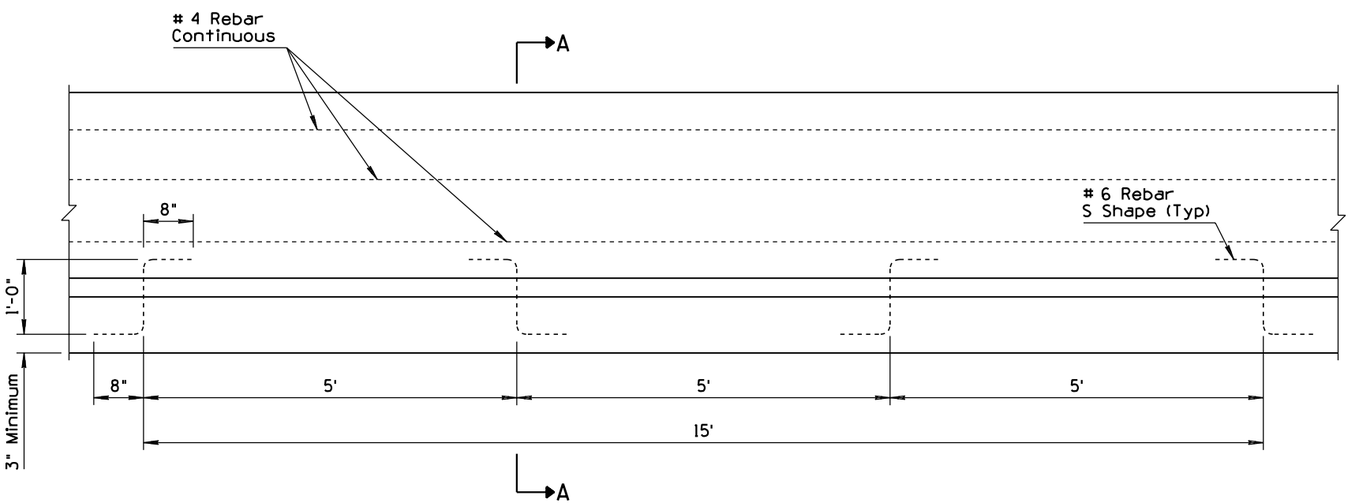

ELEVATION

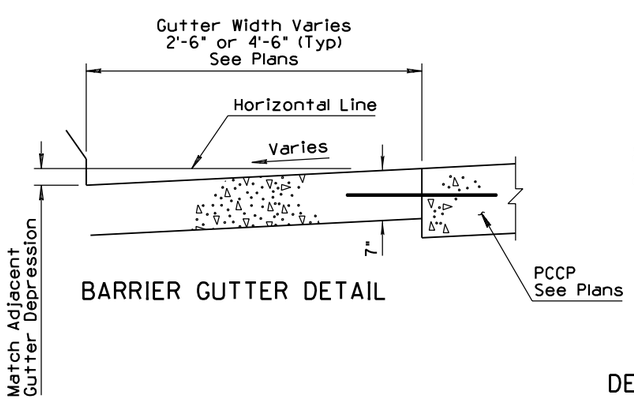

BARRIER GUTTER DETAIL

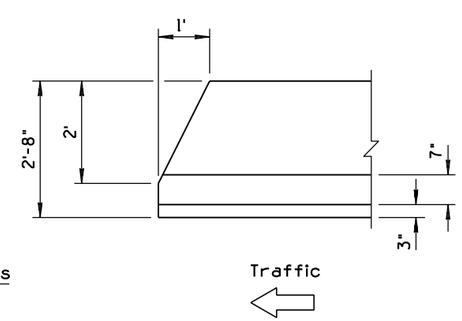

ELEVATION
DEPARTURE TERMINATION WITHOUT GUARDRAIL

GENERAL NOTES

1. Half Barrier shall be constructed by the slip or fixed form method.
2. When obstacles prevent the use of slip form equipment, stationary forms shall be used.
3. (3) Concrete shall be Class S, f'_c=4000 PSI.
4. # 4 rebar shall extend 12" past the construction joint at the completion of the day's pour.
5. Thickness of gutter, "D" can be adjusted to match the PCCP thickness, as approved by the Engineer.
6. When the pavement section slopes away from the gutter, the slope of the gutter shall match the pavement cross slope. Therefore, the 2" gutter depression is not applicable.
7. At bridges, the cross slope of the gutter shall transition to match the cross-slope of the bridge. Length of the transition is 15'.
8. Two-inch deep contraction joints shall be placed in the gutter at locations which match the joints in adjacent PCCP. Joints shall be hand-tooled or sawn.
9. (2) Whenever Half Barrier is backfilled, see Std Dwg C-10.50 for weep hole details, unless otherwise specified on the plans.

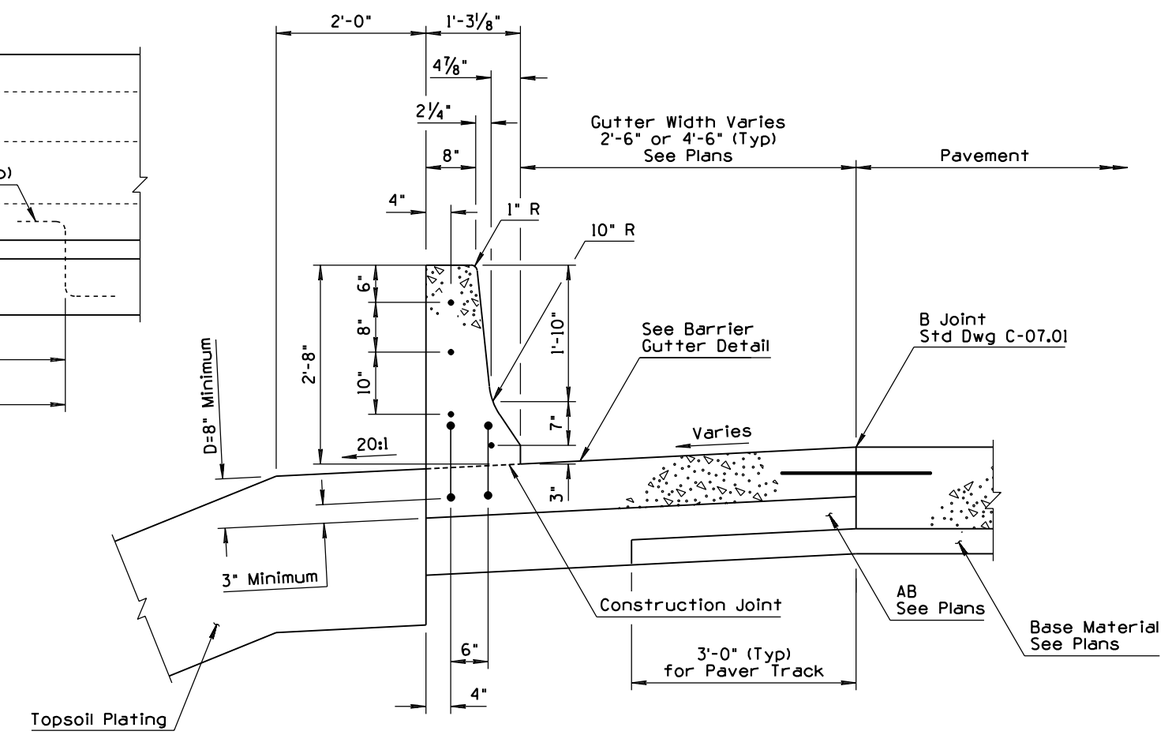

SECTION A-A

APPROVED FOR DESIGN	STATE OF ARIZONA DEPARTMENT OF TRANSPORTATION ROADWAY STANDARD DRAWINGS	REV.
		9/04
APPROVED FOR DISTRIBUTION	CONCRETE HALF BARRIER (1) 32" TYPE 'F' WITH GUTTER	DRAWING NO. (1) C-10.52

NO	DESCRIPTION OF REVISIONS	MADE BY	DATE
1	RENAMED STD DWG FROM C-10.63 & REVISED TITLE	RLF	9/04
2	ADDED GENERAL NOTE 9	RLF	9/04
3	REVISED GENERAL NOTE 3	RLF	9/04
4			

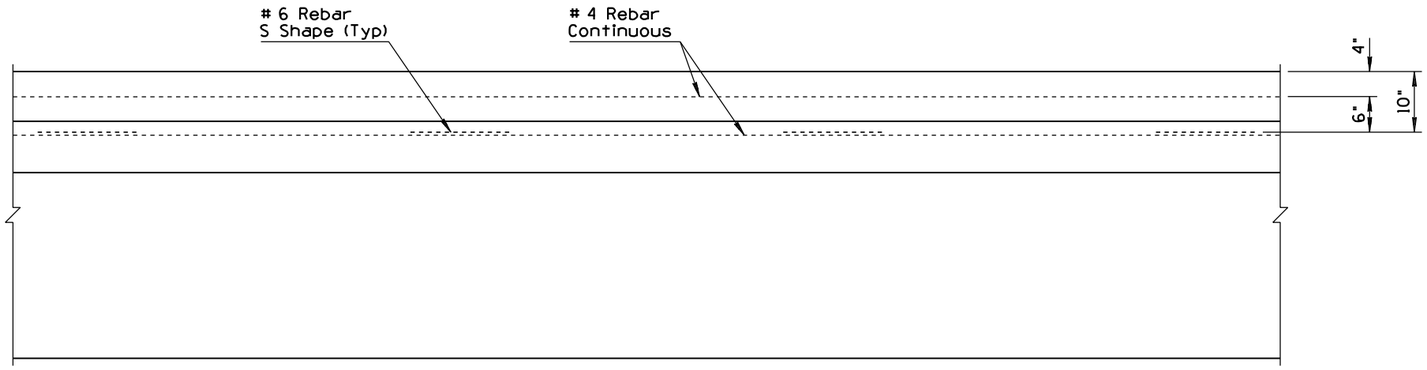

PLAN

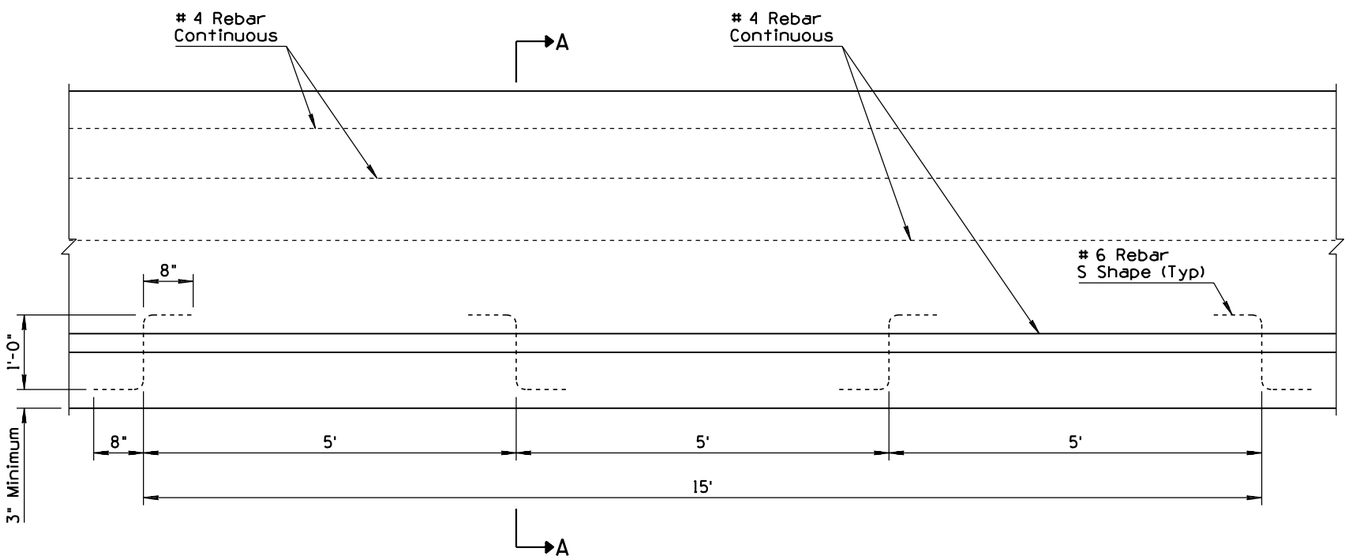

ELEVATION

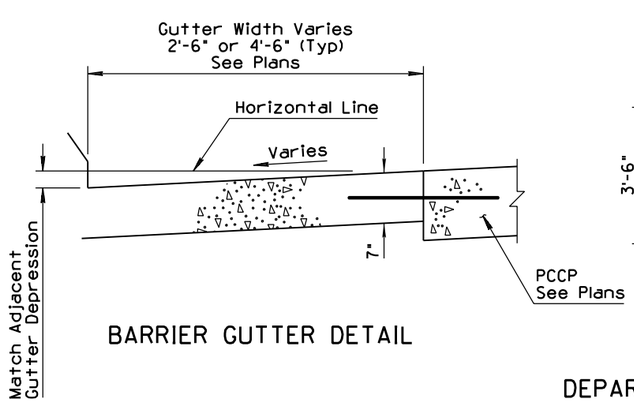

BARRIER GUTTER DETAIL

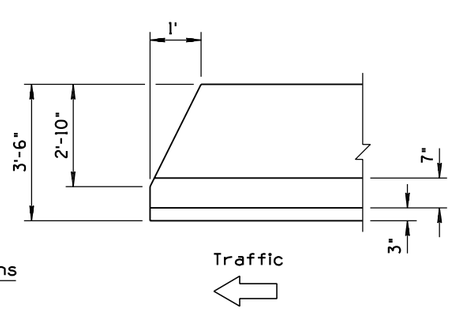

ELEVATION
DEPARTURE TERMINATION WITHOUT GUARDRAIL

GENERAL NOTES

1. Half Barrier shall be constructed by the slip or fixed form method.
2. When obstacles prevent the use of slip form equipment, stationary forms shall be used.
3. (3) Concrete shall be Class S, f'_c=4000 PSI.
4. # 4 rebar shall extend 12" past the construction joint at the completion of the day's pour.
5. Thickness of gutter, "D" can be adjusted to match the PCCP thickness, as approved by the Engineer.
6. When the pavement section slopes away from the gutter, the slope of the gutter shall match the pavement cross slope. Therefore, the 2" gutter depression is not applicable.
7. At bridges, the cross slope of the gutter shall transition to match the cross slope of the bridge. Length of the transition is 15'.
8. Two-inch deep contraction joints shall be placed in the gutter at locations which match the joints in adjacent PCCP. Joints shall be hand tooled or sawn.
9. (2) Whenever Half Barrier is backfilled, see Std Dwg C-10.50 for weep hole details, unless otherwise indicated on the plans.

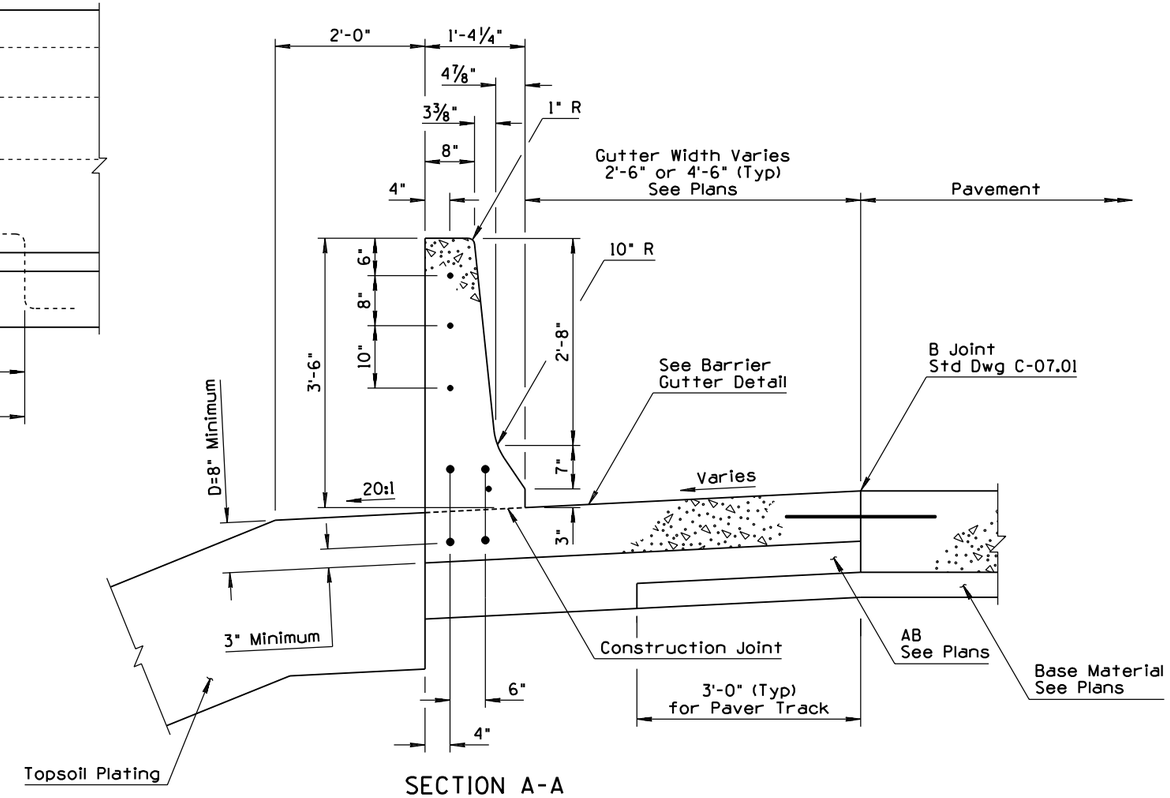

SECTION A-A

APPROVED FOR DESIGN	STATE OF ARIZONA DEPARTMENT OF TRANSPORTATION ROADWAY STANDARD DRAWINGS	REV.
Mary Vipaina		9/04
APPROVED FOR DISTRIBUTION	CONCRETE HALF BARRIER (1) 42' TYPE 'F' WITH GUTTER	DRAWING NO. (1) C-10.53

NO	DESCRIPTION OF REVISIONS	MADE BY	DATE
1	RENAMED STD DWG FROM C-1064, 1 OF 2 & REVISED TITLE	RLF	9/04
2	REVISED GENERAL NOTE 1	RLF	9/04
3	RELOCATED # 4 REBAR	RLF	9/04
4			

GENERAL NOTES

(2) 1. Concrete shall be Class S, f'_c=4000 PSI.

2. If the footing and Half Barrier are cast monolithically, # 6 S shape rebars are not required.

3. # 4 rebar shall extend 12" past the construction joint at the completion of the day's pour.

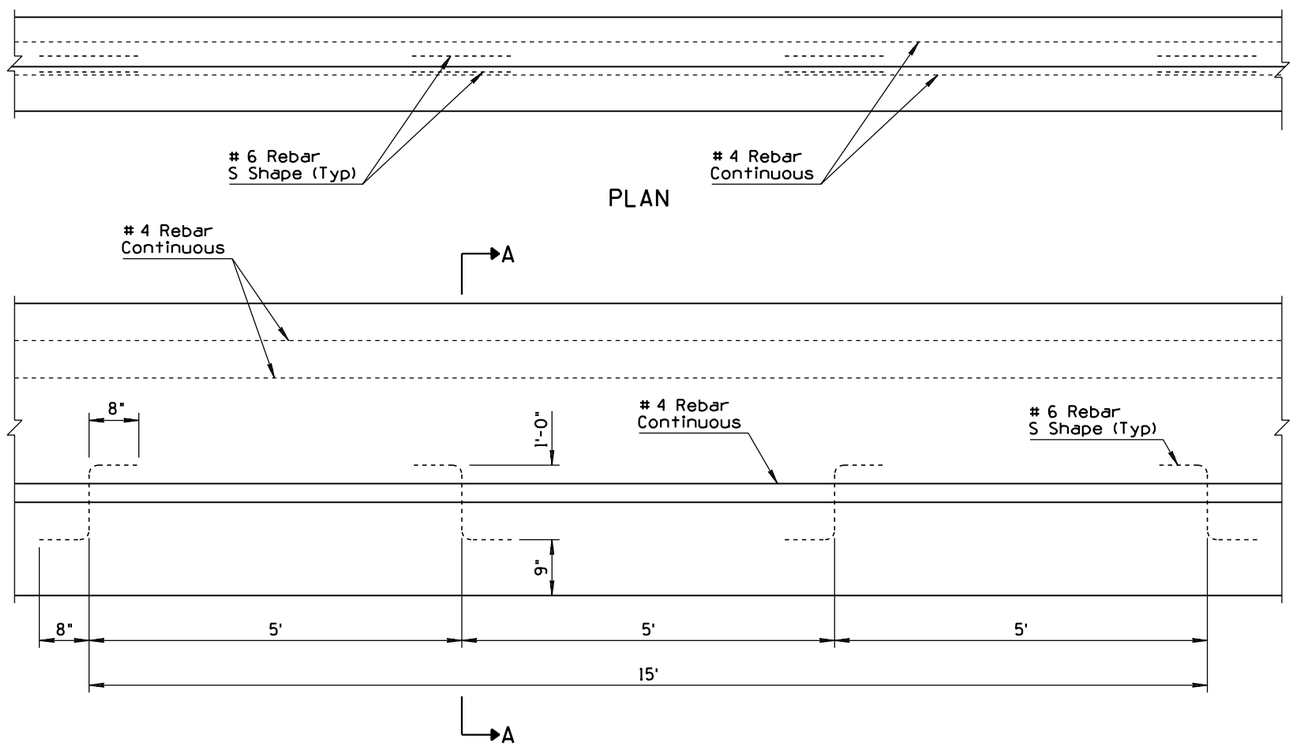

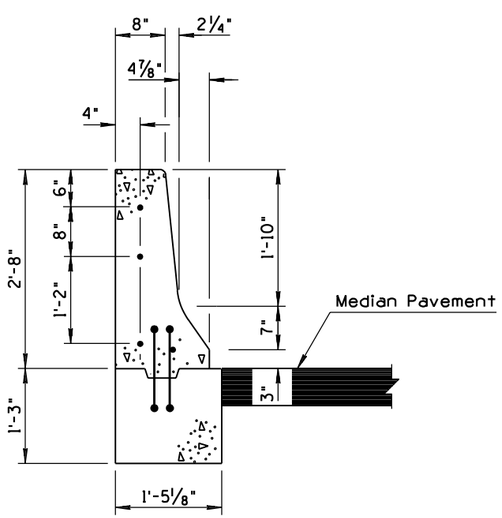

WITH AC (3)
SECTION A-A

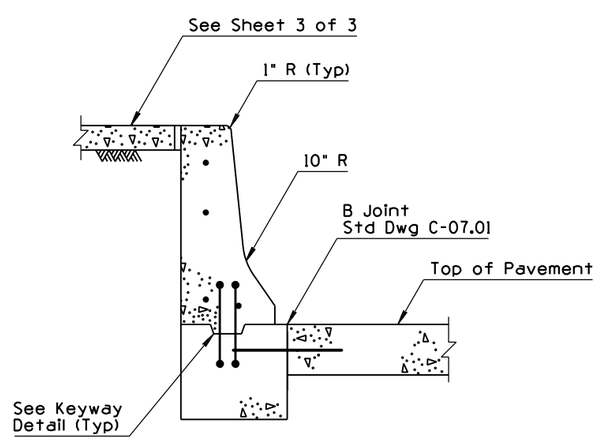

WITH PCCP (3)
SECTION A-A
SEE SECTION A-A (WITH AC)
FOR TYPICAL REBAR PLACEMENT

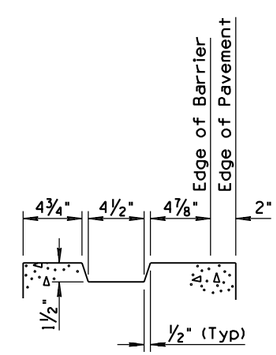

KEYWAY DETAIL
SEE SECTION A-A (WITH AC)
FOR TYPICAL REBAR PLACEMENT

APPROVED FOR DESIGN	STATE OF ARIZONA DEPARTMENT OF TRANSPORTATION ROADWAY STANDARD DRAWINGS	REV.
Mary Viparina		9/04
APPROVED FOR DISTRIBUTION	CONCRETE HALF BARRIER (1) 32" TYPE 'F' AT PIERS CAST-IN-PLACE	DRAWING NO. (1) C-10.54 Sheet 1 of 3

NO	DESCRIPTION OF REVISIONS	MADE BY	DATE
1	RENAMED STANDARD FROM C-10.64, 2 OF 2 & REVISED TITLE	RLF	9/04
2	REVISED GENERAL NOTE 1	RLF	9/04
3	DELETED ORIGINAL GENERAL NOTE 4	RLF	9/04
4	MODIFIED ELEVATION	RLF	9/04

GENERAL NOTES

(2) 1. Concrete shall be Class S, f'c=4000 PSI.

2. The Half Barrier shall be placed upon a bed of grout in order to provide a uniform bearing.

3. Doweled joints shall be grouted under pressure until all of the openings and the joints are filled.

(3) 4. All bend dimensions for rebar are out-to-out of rebars.

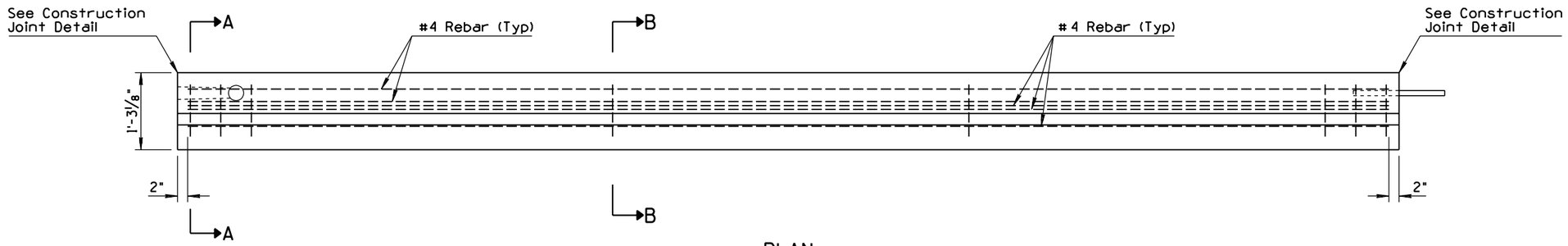

PLAN

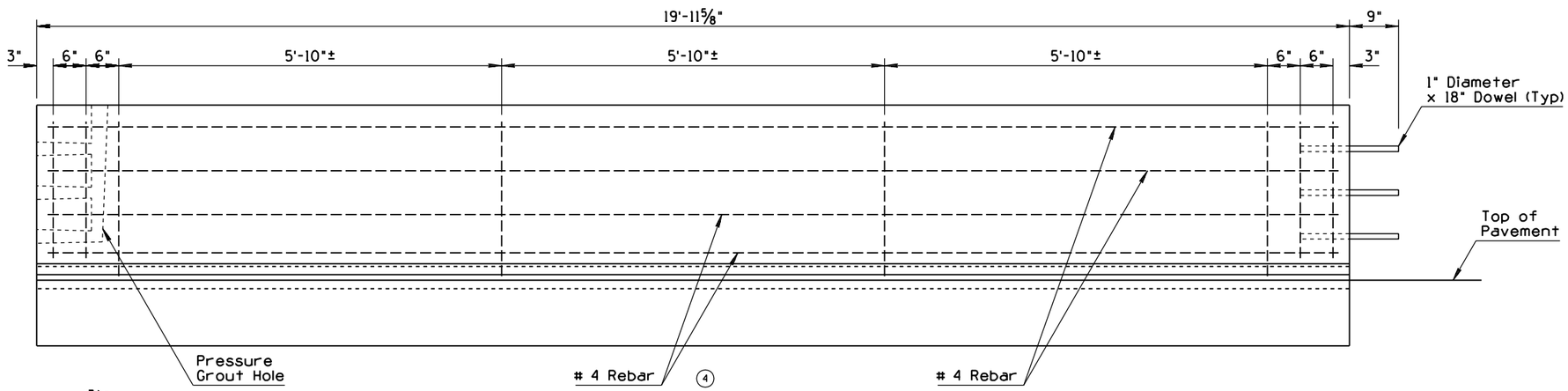

ELEVATION

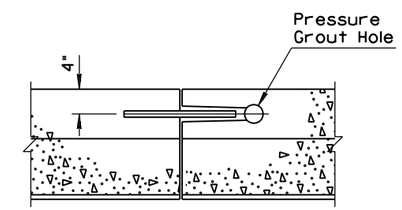

PLAN

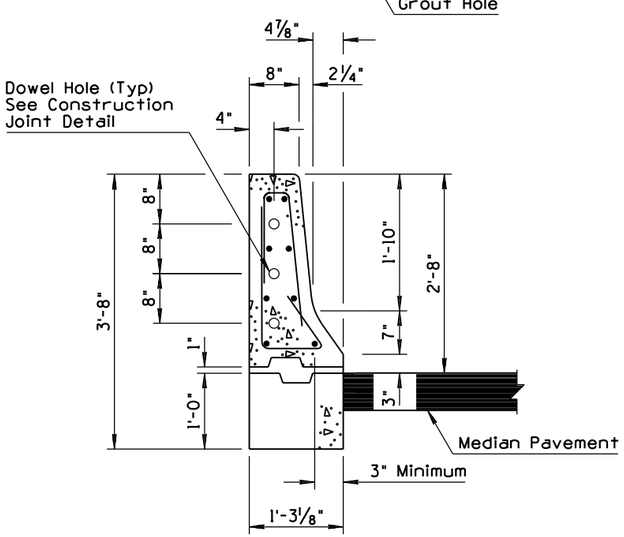

WITH AC
SECTION A-A

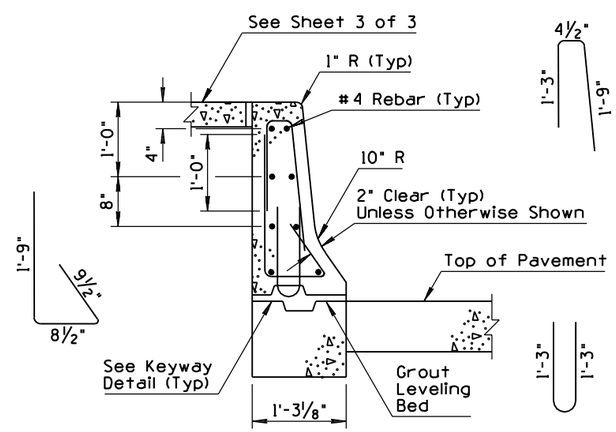

AT REBAR - WITH PCCP
SECTION B-B

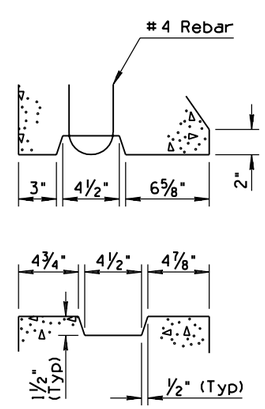

KEYWAY DETAIL

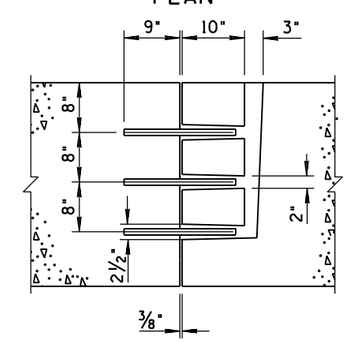

ELEVATION
CONSTRUCTION JOINT DETAIL

APPROVED FOR DESIGN	STATE OF ARIZONA DEPARTMENT OF TRANSPORTATION ROADWAY STANDARD DRAWINGS	REV. 9/04
APPROVED FOR DISTRIBUTION	CONCRETE HALF BARRIER 32" TYPE 'F' AT PIERS PRECAST (1)	DRAWING NO. (1) C-10.54 Sheet 2 of 3

NO	DESCRIPTION OF REVISIONS	MADE BY	DATE
1	RENAMED STANDARD FROM C-10.15 TO C-10.54, 3 OF 3	RLF	9/04
2	REVISED SAND BARREL REFERENCE	RLF	9/04
3	ADDED GENERAL NOTE	RLF	9/04
4	MODIFIED SLOPE CALLOUT	RLF	9/04

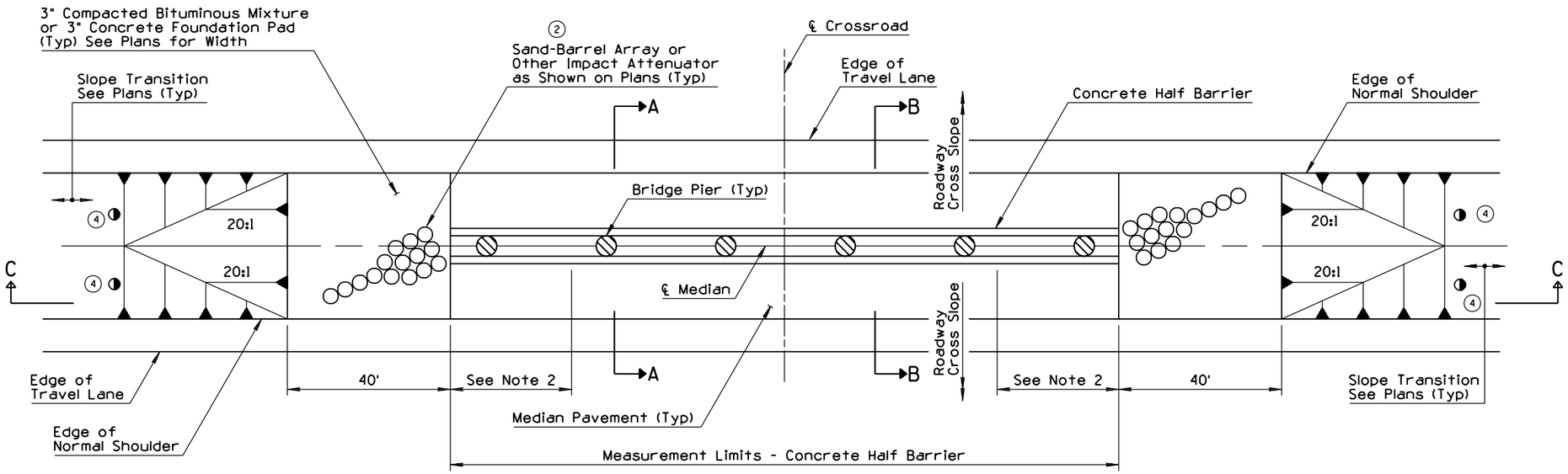

PLAN

GENERAL NOTES

1. Transition median paving cross slope to meet level foundation pad. See plans for length and location.
3. 2. Compacted backfill and Class B concrete shall be placed between bridge columns or piers only.
4. ◑ Slope as shown on Plans

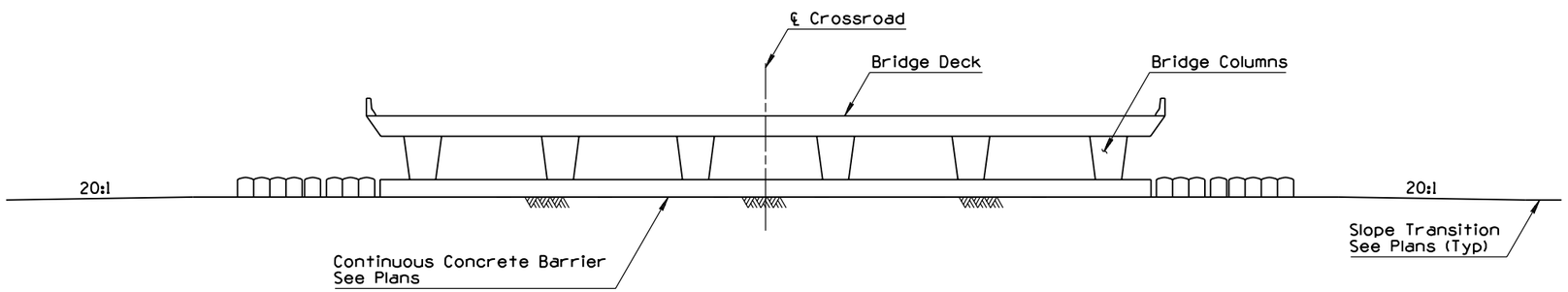

SECTION C-C

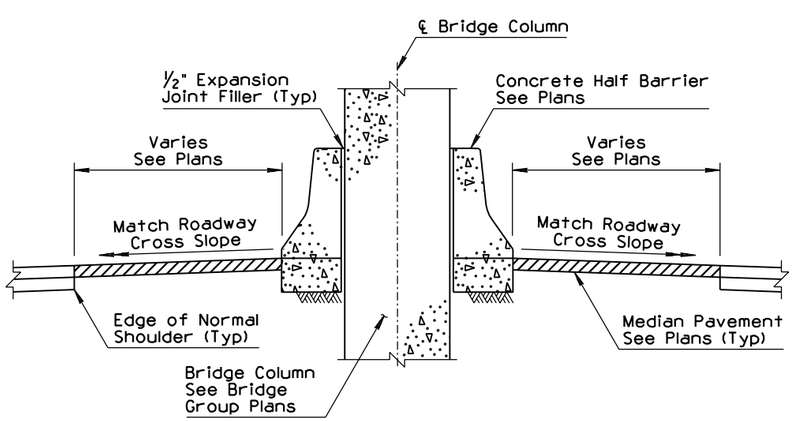

SECTION A-A

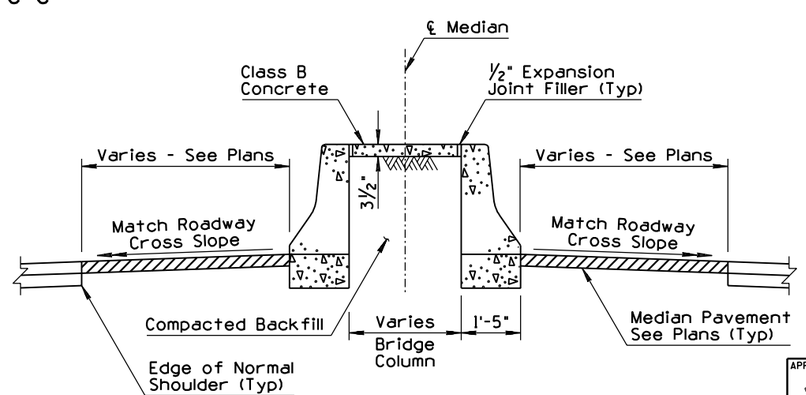

SECTION B-B

APPROVED FOR DESIGN	STATE OF ARIZONA DEPARTMENT OF TRANSPORTATION ROADWAY STANDARD DRAWINGS	REV. 9/04
APPROVED FOR DISTRIBUTION	CONCRETE HALF BARRIER 32" TYPE 'F' AT PIERS LAYOUT 1	DRAWING NO. 1 C-10.54 Sheet 3 of 3

NO	DESCRIPTION OF REVISIONS	MADE BY	DATE
1	RENAMED STD FROM C-1064a, 1 OF 2 & REVISED TITLE	RLF	9/04
2	REVISED GENERAL NOTE 1	RLF	9/04
3	RELOCATED # 4 REBAR	RLF	9/04
4			

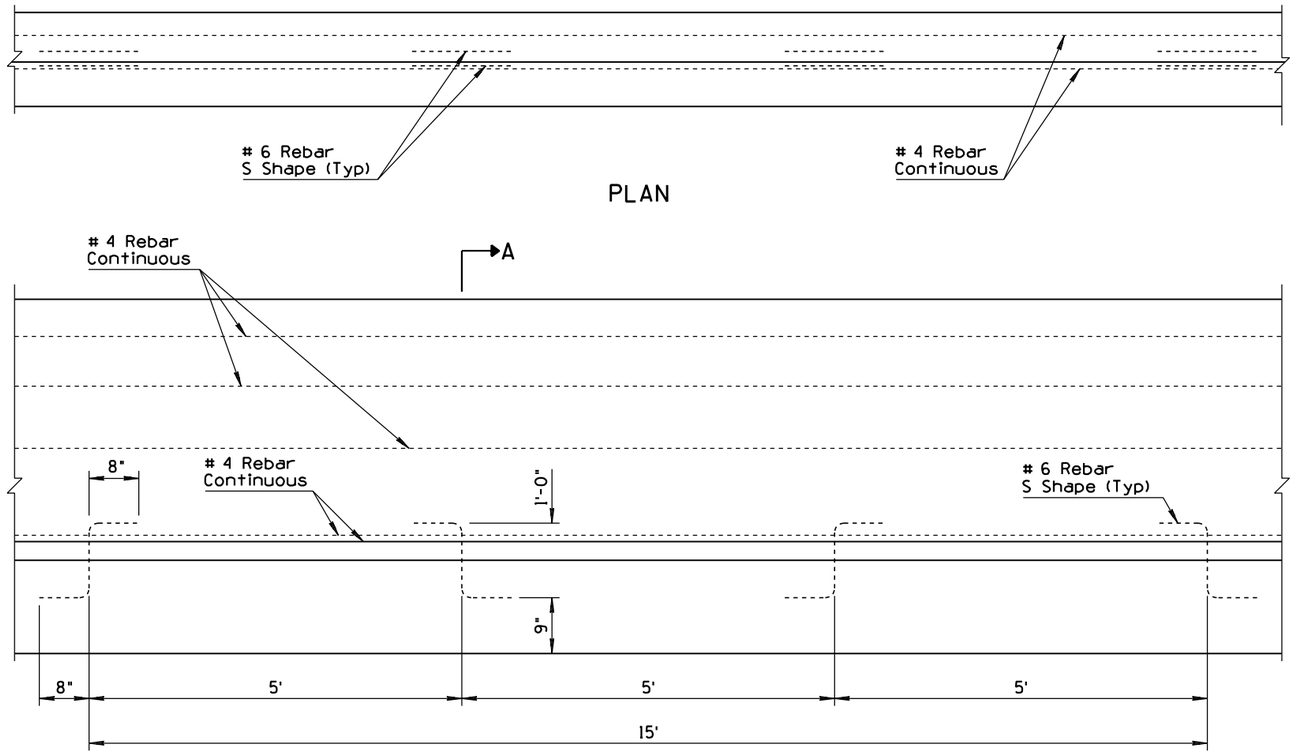

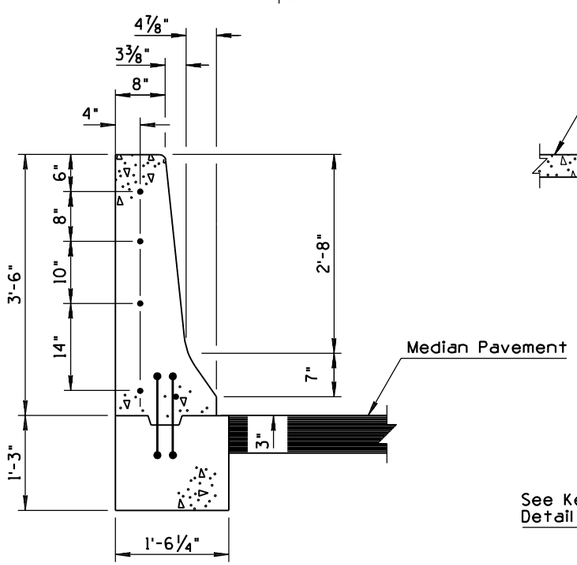

WITH AC ③
SECTION A-A

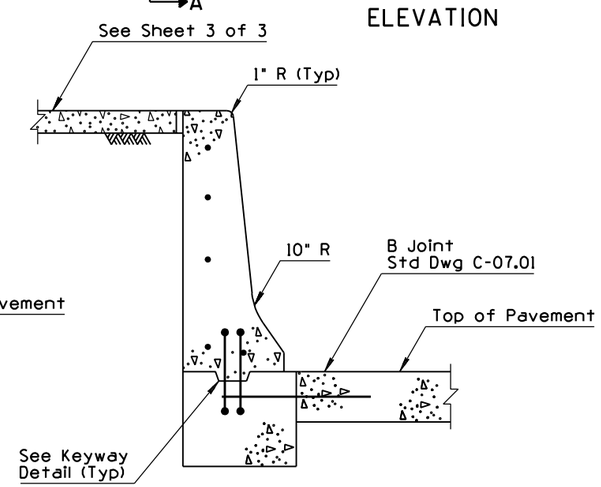

WITH PCCP ③
SECTION A-A
SEE SECTION A-A (WITH AC) FOR TYPICAL REBAR PLACEMENT

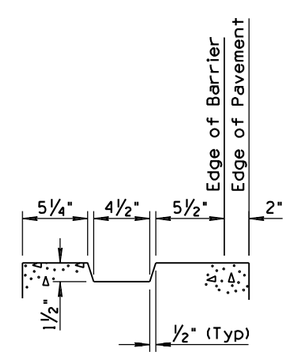

KEYWAY DETAIL
SEE SECTION A-A (WITH AC) FOR TYPICAL REBAR PLACEMENT

GENERAL NOTES

② 1. Concrete shall be Class S, f'_c=4000 PSI.

2. If the footing and barrier are cast monolithically, #6 S shape rebars are not required.

3. Barrier width shall not exceed the barrier footing width nor overhang the adjacent pavement.

4. # 4 rebar shall extend 12" past the construction joint at the completion of the day's pour.

APPROVED FOR DESIGN Mary Vipana	STATE OF ARIZONA DEPARTMENT OF TRANSPORTATION ROADWAY STANDARD DRAWINGS	REV. 9/04
APPROVED FOR DISTRIBUTION	CONCRETE HALF BARRIER ① 42" TYPE 'F' AT PIERS CAST-IN-PLACE	DRAWING NO. ① C-10.55 Sheet 1 of 3

NO	DESCRIPTION OF REVISIONS	MADE BY	DATE
1	RENAMED STD FROM C-10642a, 2 OF 2 AND REVISED TITLE	RLF	9/04
2	REVISED GENERAL NOTES 1, 4 AND ADDED NOTE 5	RLF	9/04
3	MODIFIED ELEVATION	RLF	9/04
4			

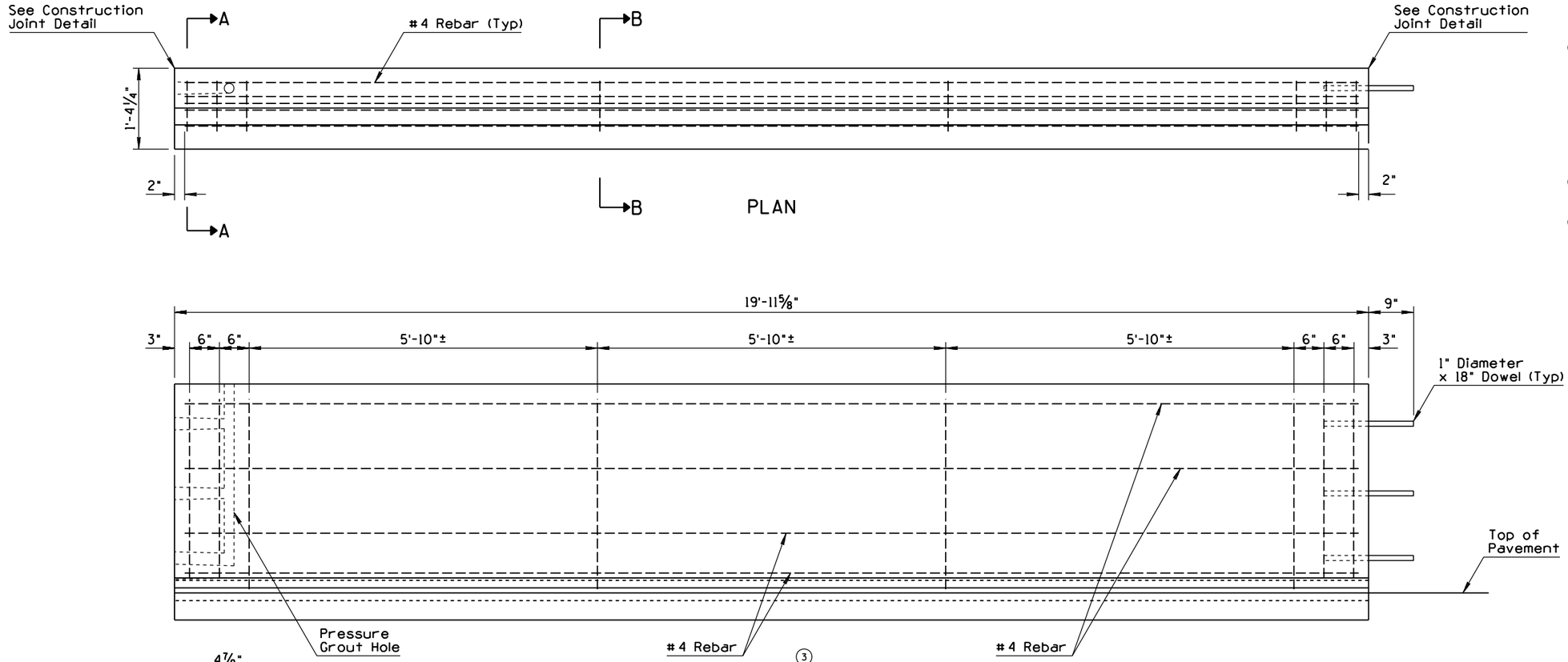

GENERAL NOTES

2 1. Concrete shall be Class S, f'c=4000 PSI.

2. The Half Barrier shall be placed upon a bed of grout in order to provide a uniform bearing.

3. Doweled joints shall be grouted under pressure until all of the openings and the joints are filled.

2 4. All bend dimensions for rebar are out-to-out of bars.

2 5. Rebar shall have 2" minimum clear cover unless otherwise noted.

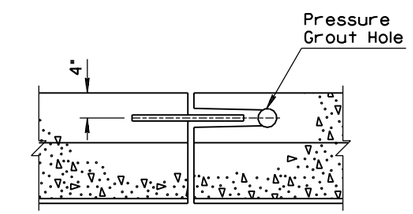

PLAN

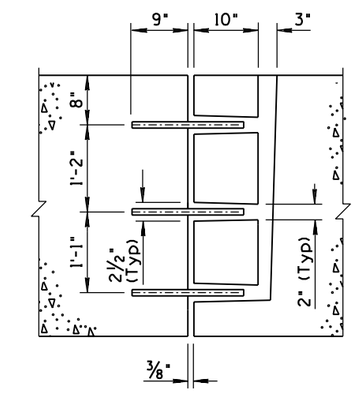

ELEVATION
CONSTRUCTION JOINT DETAIL

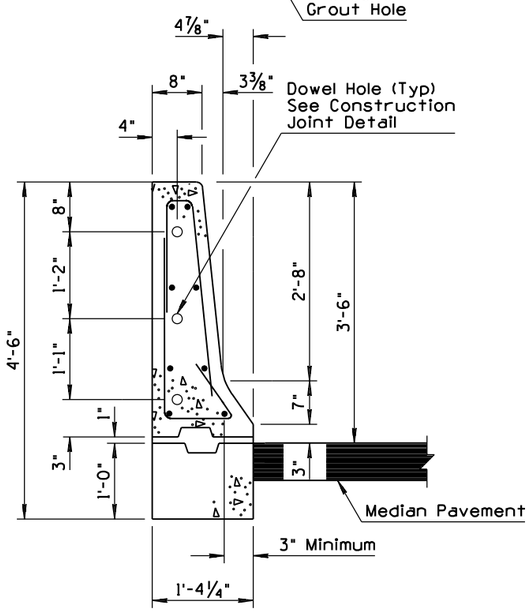

WITH AC
SECTION A-A

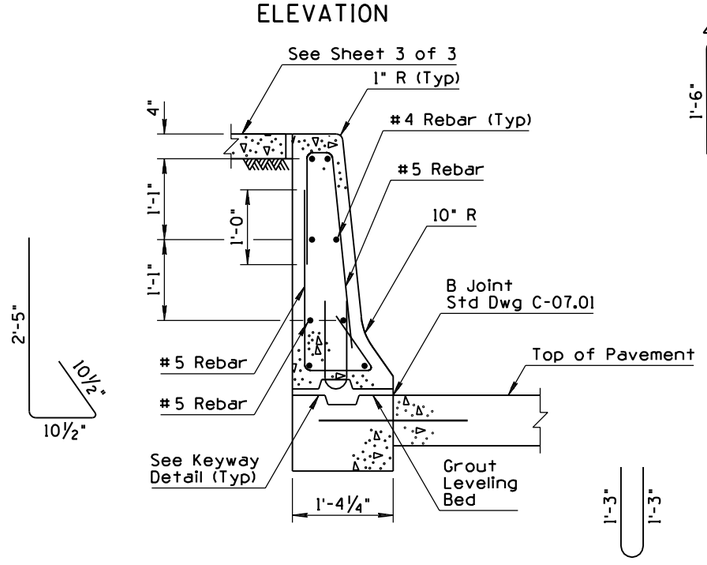

AT REBAR - WITH PCCP
SECTION B-B

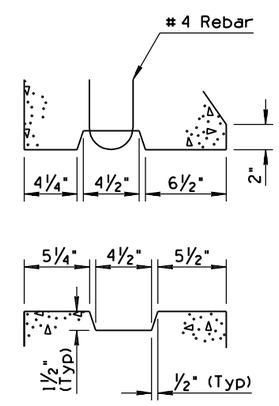

KEYWAY DETAIL

APPROVED FOR DESIGN	STATE OF ARIZONA DEPARTMENT OF TRANSPORTATION ROADWAY STANDARD DRAWINGS	REV. 9/04
APPROVED FOR DISTRIBUTION	CONCRETE HALF BARRIER 42" TYPE 'F' AT PIERS PRECAST 1	DRAWING NO. 1 C-10.55 Sheet 2 of 3

NO	DESCRIPTION OF REVISIONS	MADE BY	DATE
1	NEW STANDARD DWG	RLF	9/04
2			
3			
4			

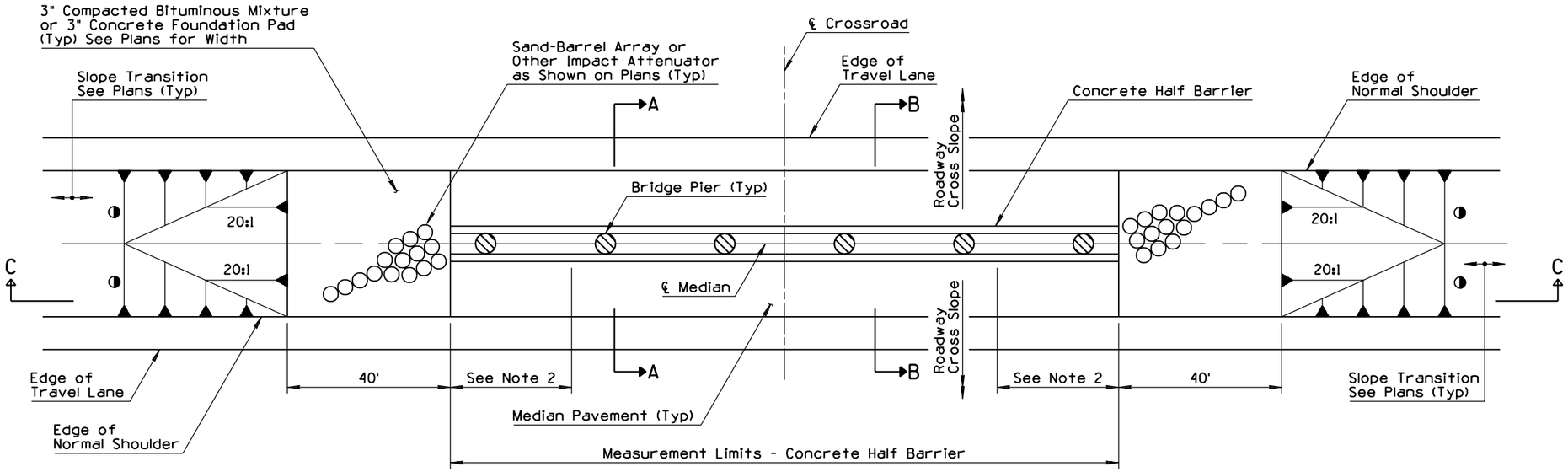

PLAN

GENERAL NOTES

1. Transition median paving cross slope to meet level foundation pad. See plans for length and location.
2. Compacted backfill and Class B concrete shall be placed between bridge columns or piers only.

◑ Slope as shown on Plans

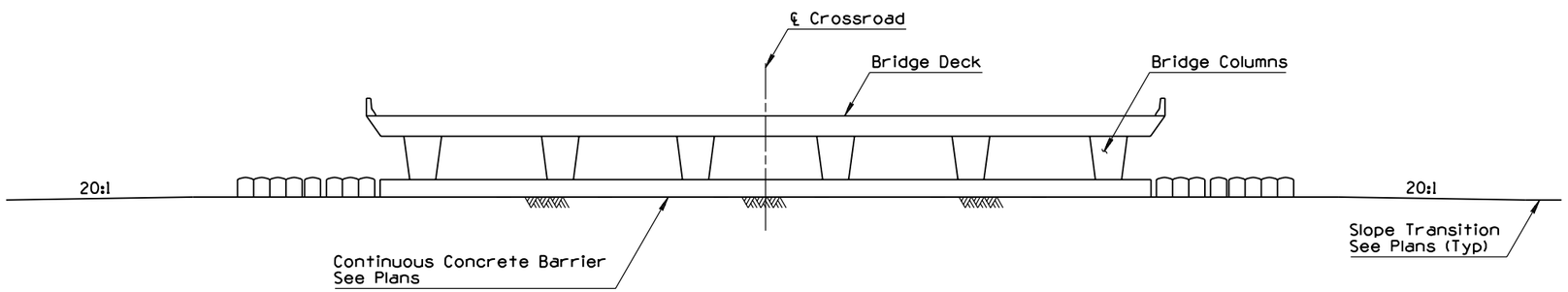

SECTION C-C

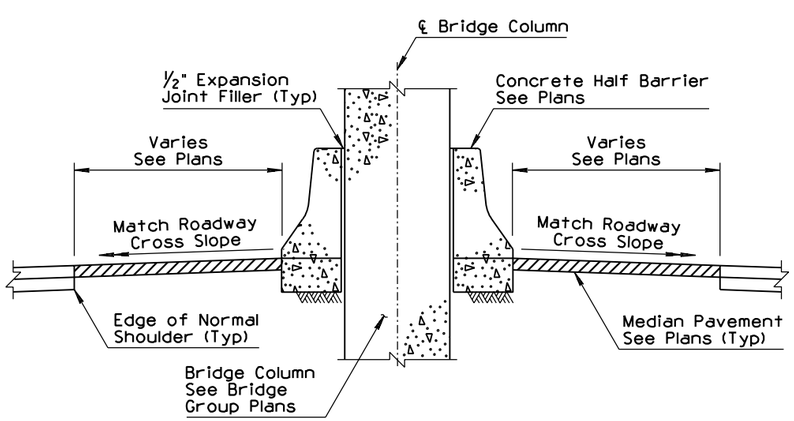

SECTION A-A

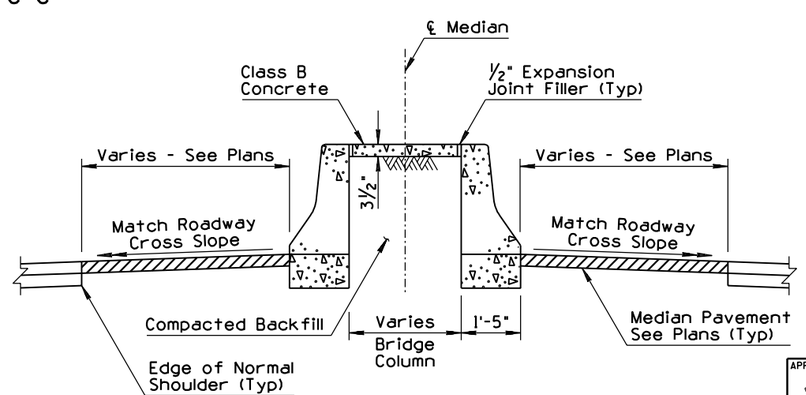

SECTION B-B

APPROVED FOR DESIGN	STATE OF ARIZONA DEPARTMENT OF TRANSPORTATION ROADWAY STANDARD DRAWINGS	REV. 9/04
APPROVED FOR DISTRIBUTION	CONCRETE HALF BARRIER 42" TYPE 'F' AT PIERS LAYOUT	DRAWING NO. C-10.55 Sheet 3 of 3

NO	DESCRIPTION OF REVISIONS	MADE BY	DATE
1	REISSUED STANDARD DRAWING	RLF	9/04
2			
3			
4			

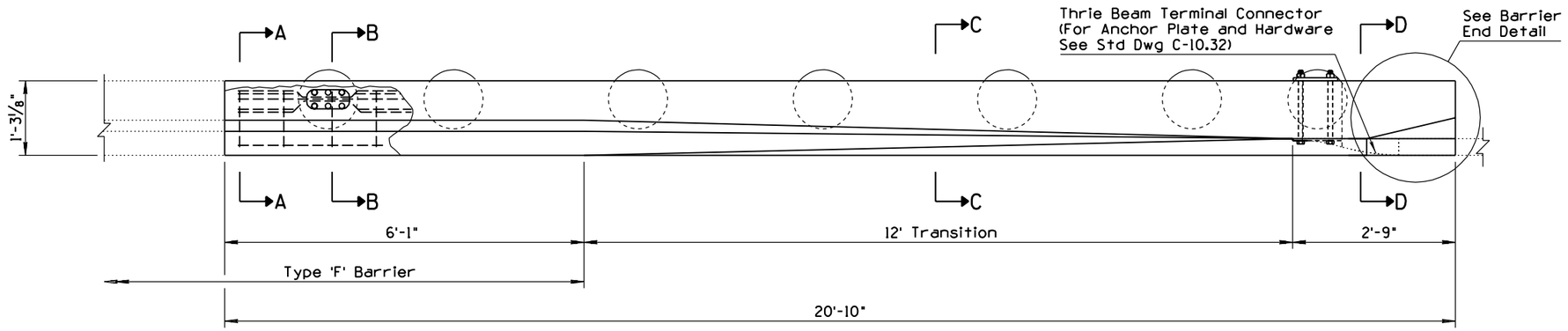

PLAN

GENERAL NOTES

1. Concrete shall be Class S, f'_c=4000 PSI.
2. All rebar shall have 2" minimum clear cover unless otherwise noted.
3. All bend dimensions for rebar are out-to-out of rebars.

◧ 1'-0" Minimum or Match Thickness of Adjacant PCCP

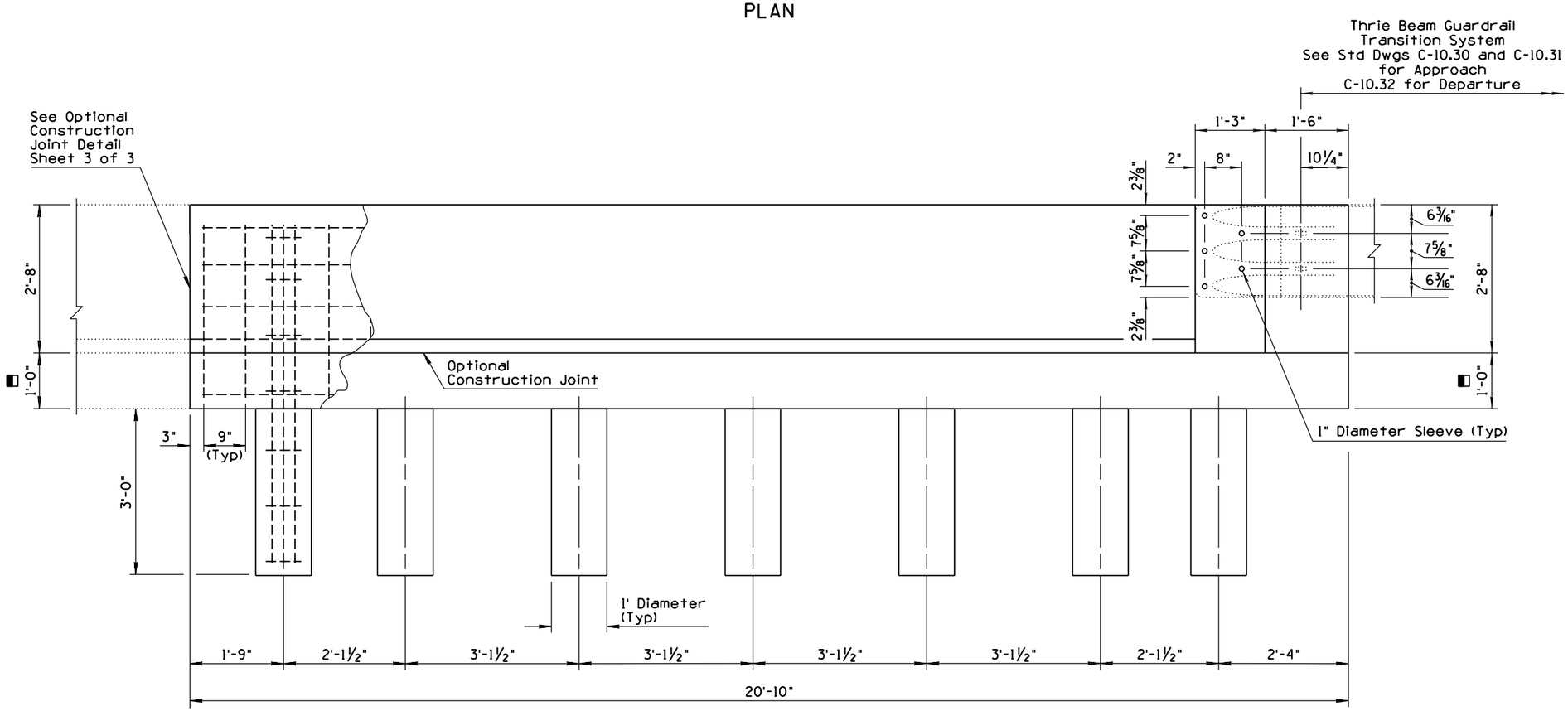

ELEVATION
BARRIER WITHOUT CURB

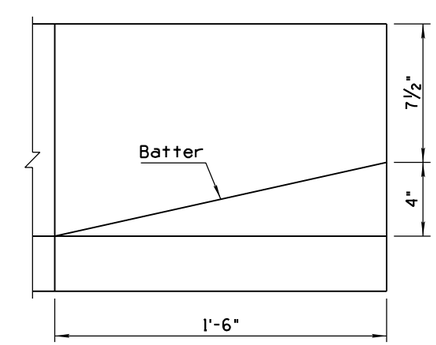

BARRIER END DETAIL

APPROVED FOR DESIGN	STATE OF ARIZONA DEPARTMENT OF TRANSPORTATION ROADWAY STANDARD DRAWINGS	REV. 9/04
APPROVED FOR DISTRIBUTION	CONCRETE HALF-BARRIER TRANSITION TO VERTICAL 32" TYPE 'F WITH CAISSONS	DRAWING NO. 1 C-10.70 Sheet 1 of 3

NO	DESCRIPTION OF REVISIONS	MADE BY	DATE
1	REVISED DIMENSION	RLF	9/04
2	REVISED TITLE	RLF	9/04
3	ADDED REFERENCE	RLF	9/04
4			

GENERAL NOTES

1. See Section B-B for caisson reinforcement.

◑ See Optional Construction Joint Detail, Sheet 3 of 3

◧ 1'-0" Minimum or Match Thickness of Adjacant PCCP

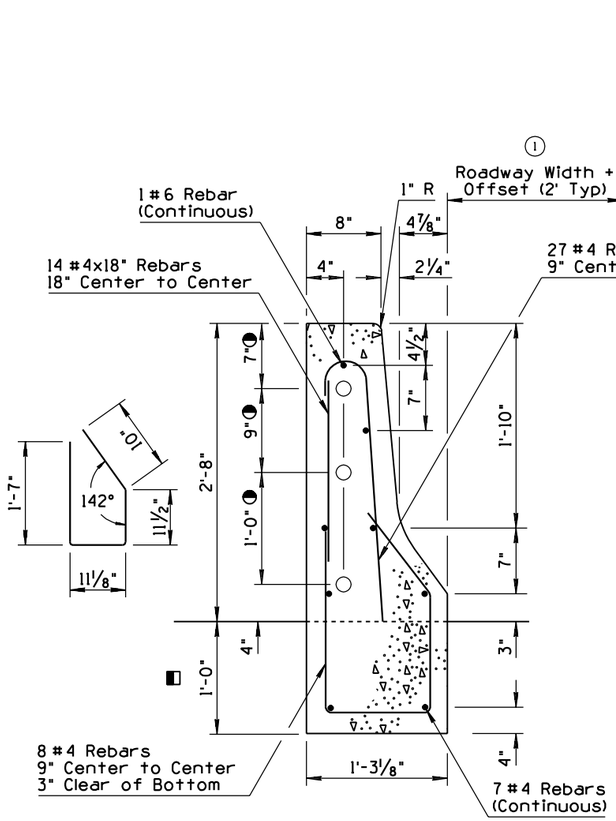

WITHOUT CURB
SECTION A-A

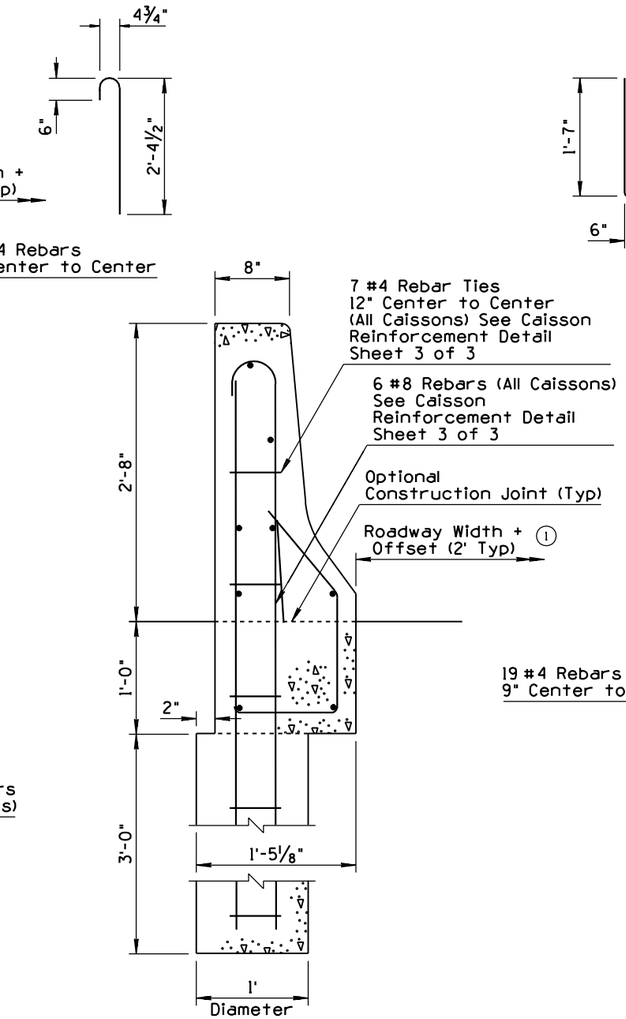

WITHOUT CURB
SECTION B-B

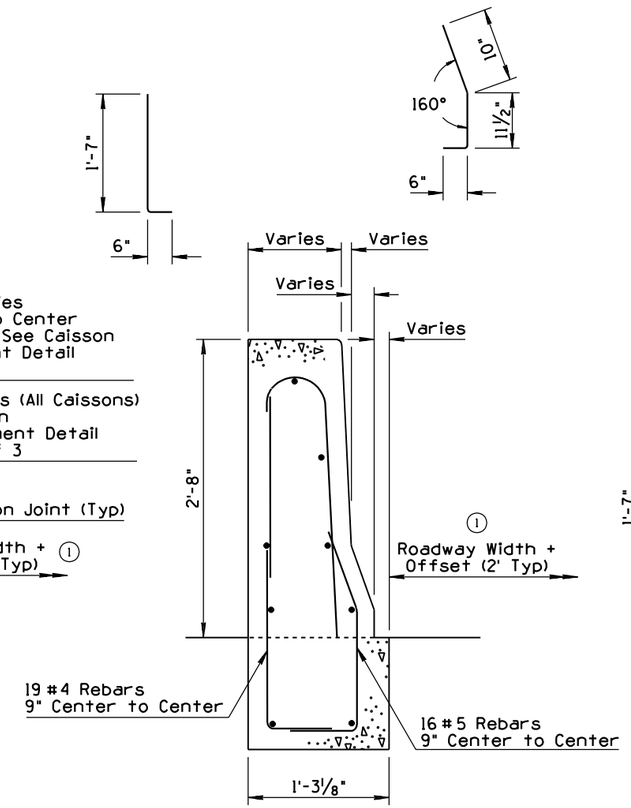

WITHOUT CURB
SECTION C-C

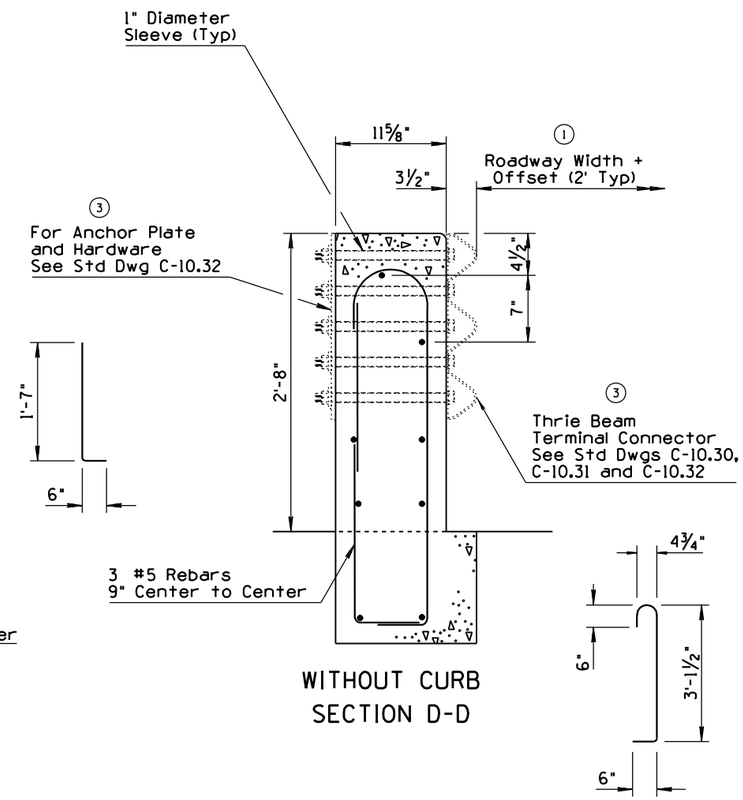

WITHOUT CURB
SECTION D-D

APPROVED FOR DESIGN	STATE OF ARIZONA DEPARTMENT OF TRANSPORTATION ROADWAY STANDARD DRAWINGS	REV.
		9/04
APPROVED FOR DISTRIBUTION	CONCRETE HALF-BARRIER TRANSITION TO VERTICAL 32" TYPE 'F' WITH CAISSONS ②	DRAWING NO. C-10.70 Sheet 2 of 3

NO	DESCRIPTION OF REVISIONS	MADE BY	DATE
1	REVISED TITLE	RLF	9/04
2	REMOVED ANCHOR PLATE DETAIL	RLF	9/04
3			
4			

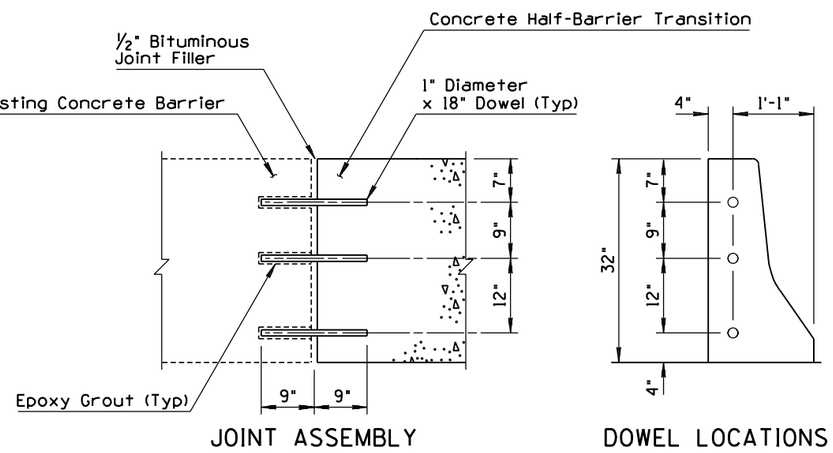

CONSTRUCTION JOINT DETAIL
(OPTIONAL)

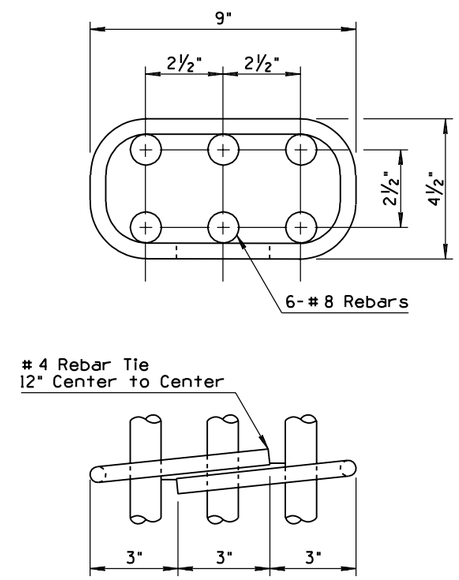

CAISSON REINFORCEMENT

②

APPROVED FOR DESIGN	STATE OF ARIZONA DEPARTMENT OF TRANSPORTATION ROADWAY STANDARD DRAWINGS	REV.
Mary Viparina		9/04
APPROVED FOR DISTRIBUTION	CONCRETE HALF-BARRIER TRANSITION TO VERTICAL 32" TYPE 'F' WITH CAISSONS ①	DRAWING NO. C-10.70 Sheet 3 of 3

NO	DESCRIPTION OF REVISIONS	MADE BY	DATE
1	REISSUED STANDARD DRAWING	RLF	9/04
2			
3			
4			

GENERAL NOTES

1. Concrete shall be Class S, f'_c=4000 PSI.
2. All rebar shall have 2" minimum clear cover unless otherwise noted.
3. All bend dimensions for rebar are out-to-out of bars.
4. Two-inch deep contraction joints shall be placed in the gutter at locations which match the joints in adjacent PCCP and at approximate 15' centers when adjacent to AC pavement. Joints shall be either hand tooled or sawn.

◧ 1'-0" Minimum or Match Thickness of Adjacant PCCP

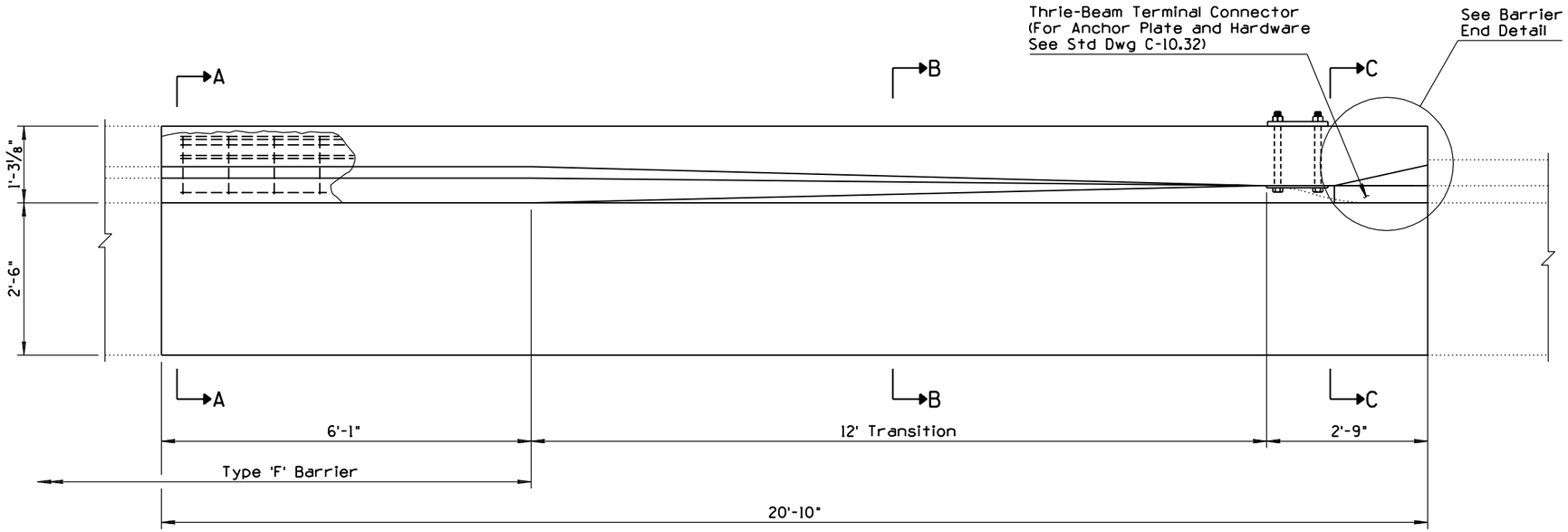

PLAN

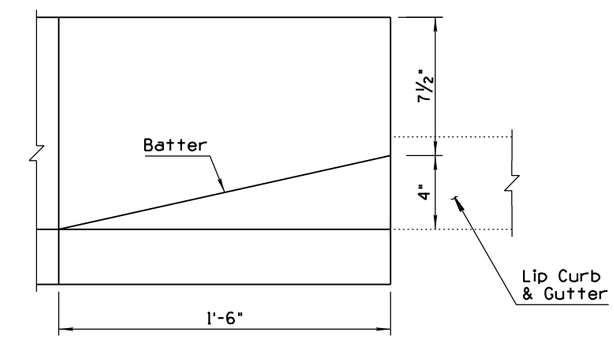

BARRIER END DETAIL

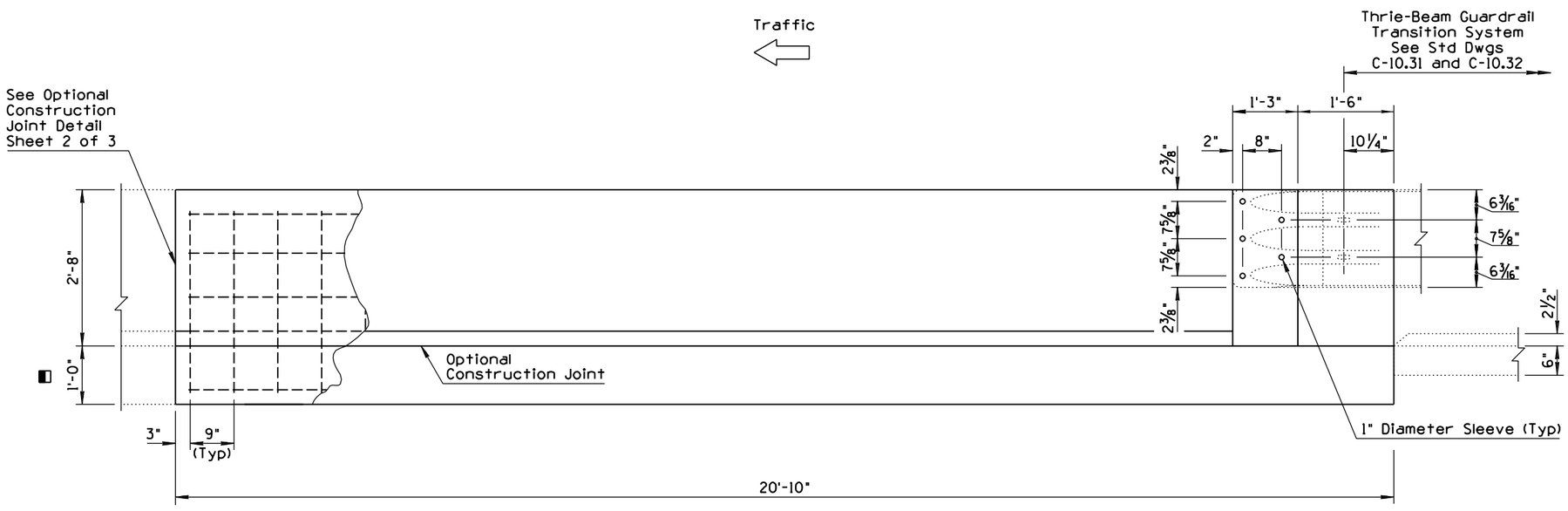

ELEVATION
BARRIER WITH CURB AND GUTTER

APPROVED FOR DESIGN	STATE OF ARIZONA DEPARTMENT OF TRANSPORTATION ROADWAY STANDARD DRAWINGS	REV. 9/04
APPROVED FOR DISTRIBUTION	CONCRETE HALF-BARRIER TRANSITION TO VERTICAL 32" TYPE 'F' WITH CURB & GUTTER	DRAWING NO. 1 C-10.71 Sheet 1 of 2

NO	DESCRIPTION OF REVISIONS	MADE BY	DATE
1	REISSUED STD DWG	RLF	9/04
2	ADDED REFERENCE	RLF	9/04
3	REMOVED ANCHOR PLATE DETAIL	RLF	9/04
4			

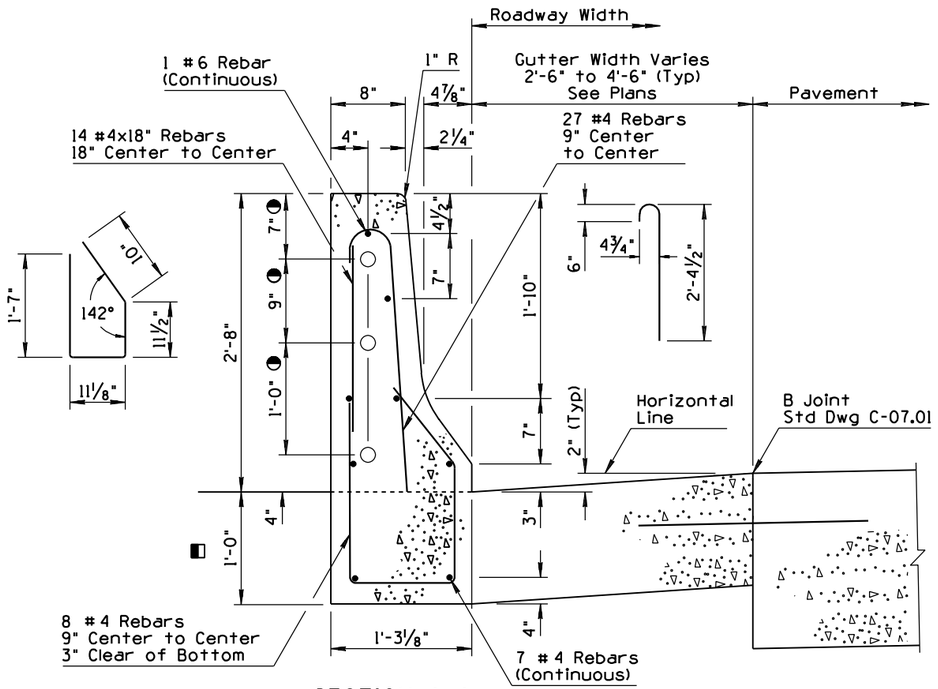

SECTION A-A

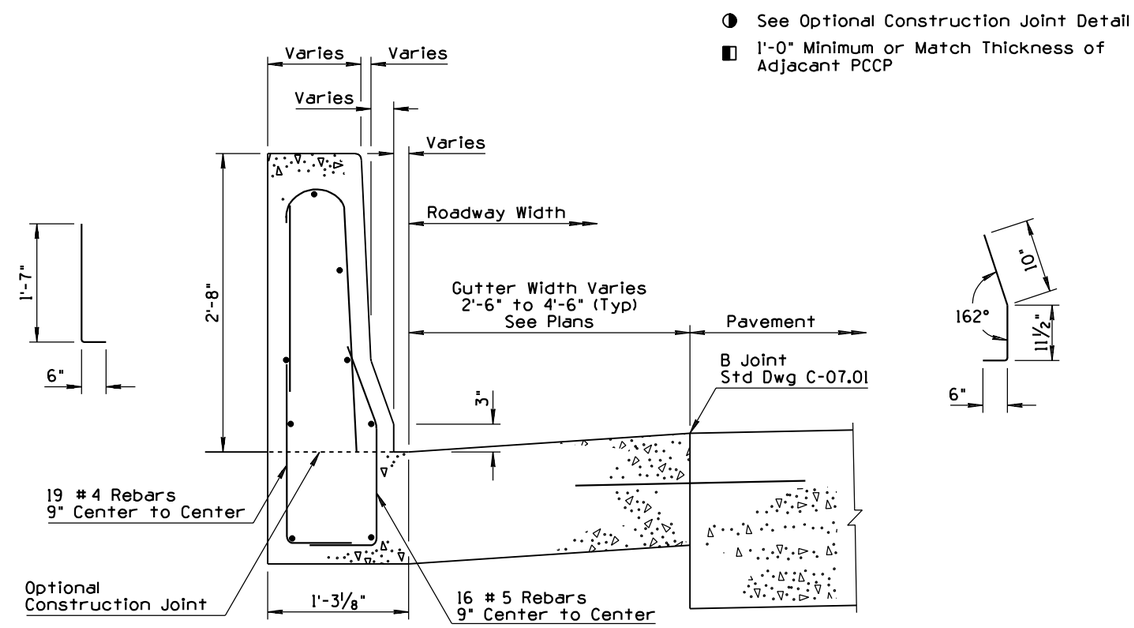

SECTION B-B

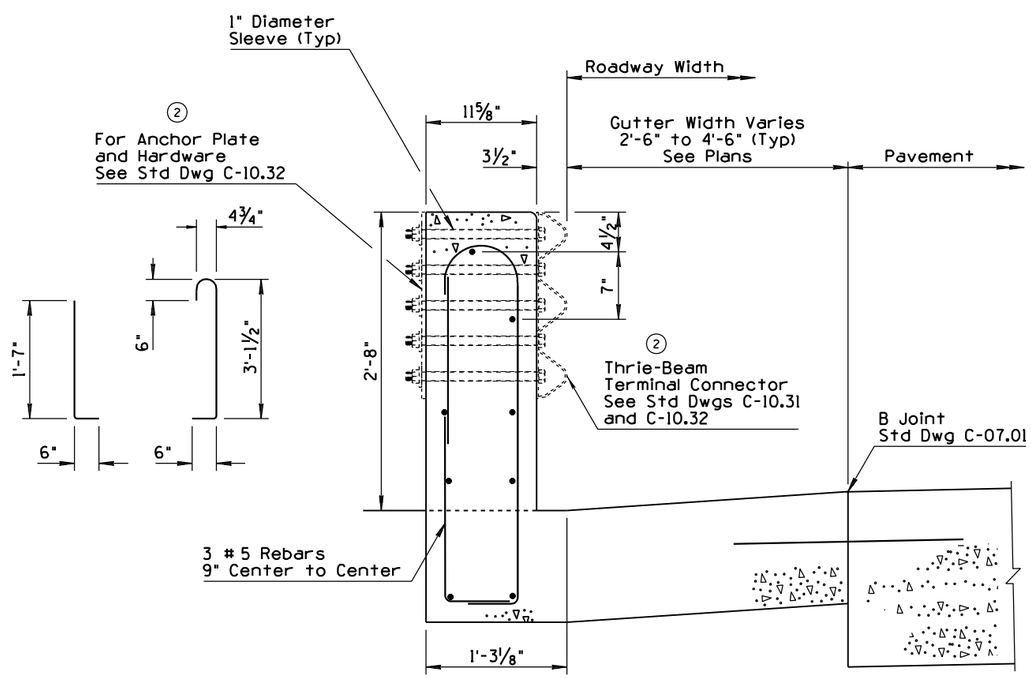

SECTION C-C

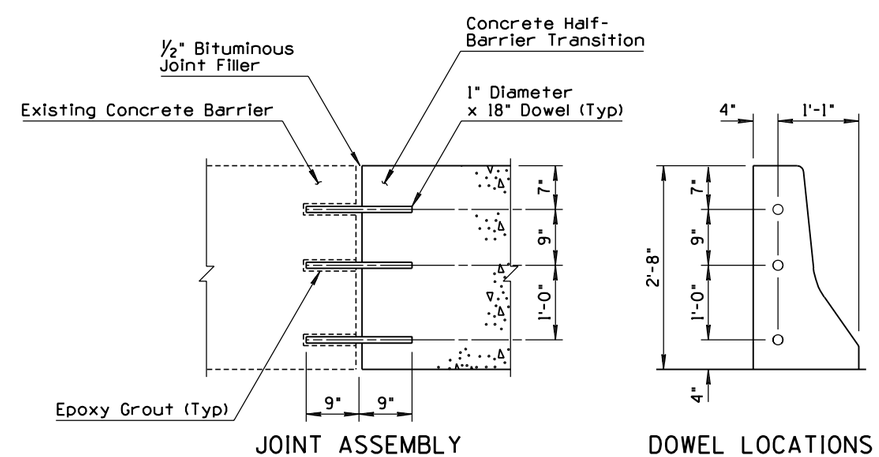

JOINT ASSEMBLY

DOWEL LOCATIONS

CONSTRUCTION JOINT DETAIL (OPTIONAL)

APPROVED FOR DESIGN	STATE OF ARIZONA DEPARTMENT OF TRANSPORTATION ROADWAY STANDARD DRAWINGS	REV. 9/04
APPROVED FOR DISTRIBUTION	CONCRETE HALF-BARRIER TRANSITION TO VERTICAL 32" TYPE 'F' WITH CURB & GUTTER	DRAWING NO. 1 C-10.71 Sheet 2 of 2

NO	DESCRIPTION OF REVISIONS	MADE BY	DATE
1	REISSUED STANDARD DRAWING	RLF	9/04
2			
3			
4			

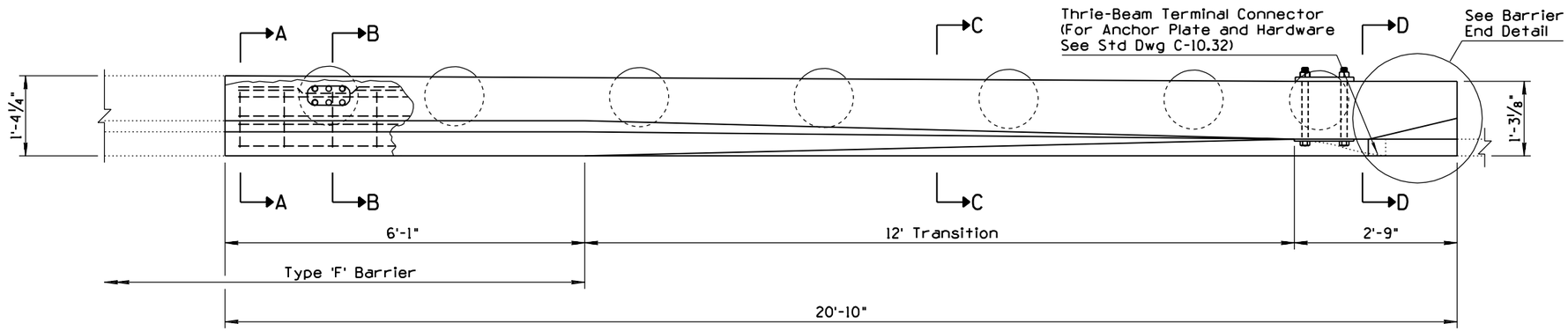

PLAN

GENERAL NOTES

1. Concrete shall be Class S, f'_c=4000 PSI.
2. All rebar shall have 2" minimum clear cover unless otherwise noted.
3. All bend dimensions for rebar are out-to-out of rebars.

◧ 1'-0" Minimum or Match Thickness of Adjacent PCCP

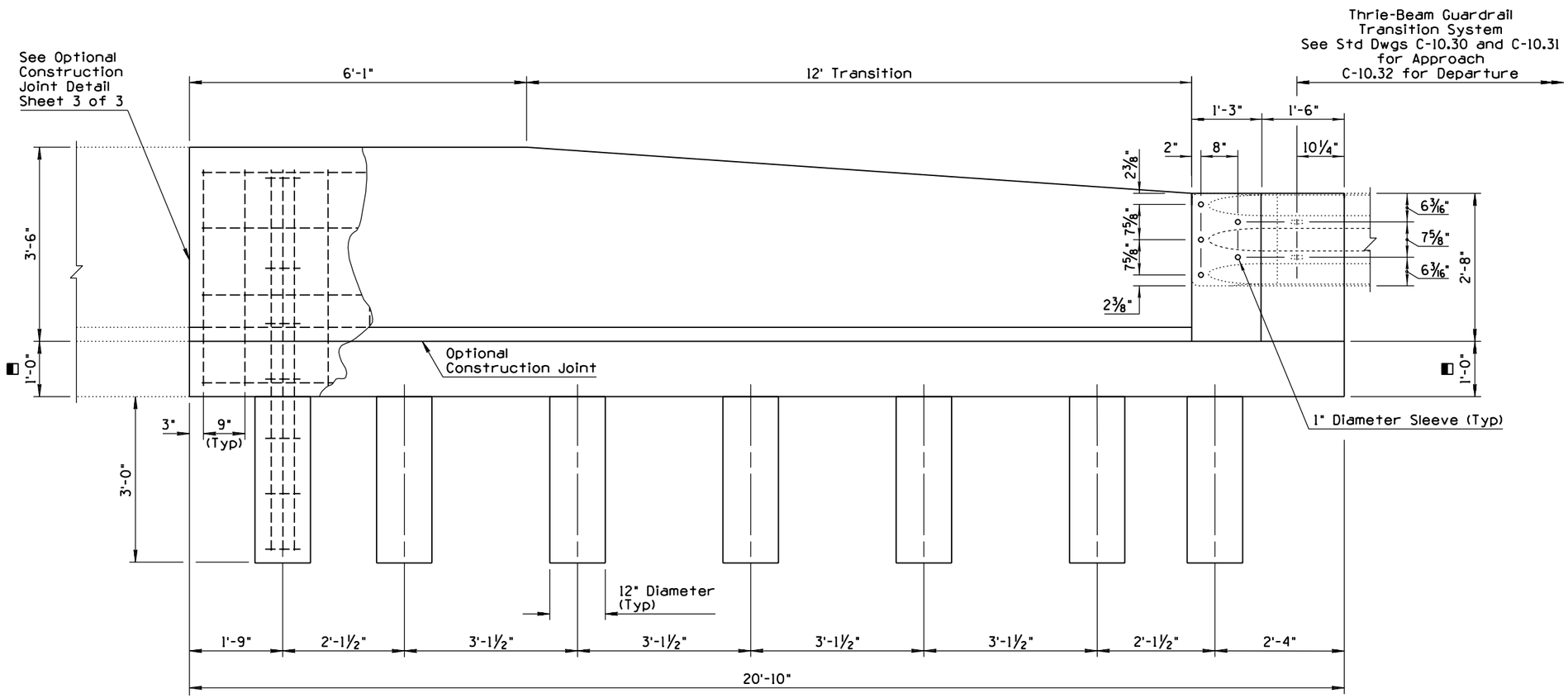

ELEVATION
BARRIER WITHOUT CURB

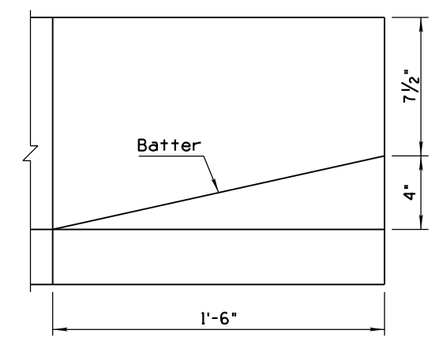

BARRIER END DETAIL

APPROVED FOR DESIGN	STATE OF ARIZONA DEPARTMENT OF TRANSPORTATION ROADWAY STANDARD DRAWINGS	REV. 9/04
APPROVED FOR DISTRIBUTION	CONCRETE HALF-BARRIER TRANSITION TO VERTICAL 42" TO 32" TYPE 'F' WITH CAISSONS	DRAWING NO. 1 C-10.72 Sheet 1 of 3

NO	DESCRIPTION OF REVISIONS	MADE BY	DATE
1	REISSUED STD DWG	RLF	9/04
2			
3			
4			

GENERAL NOTES

1. See Section B-B for caisson reinforcement.

◑ See Optional Construction Joint Detail, Sheet 3 of 3

◧ 1'-0" Minimum or Match Thickness of Adjacant PCCP

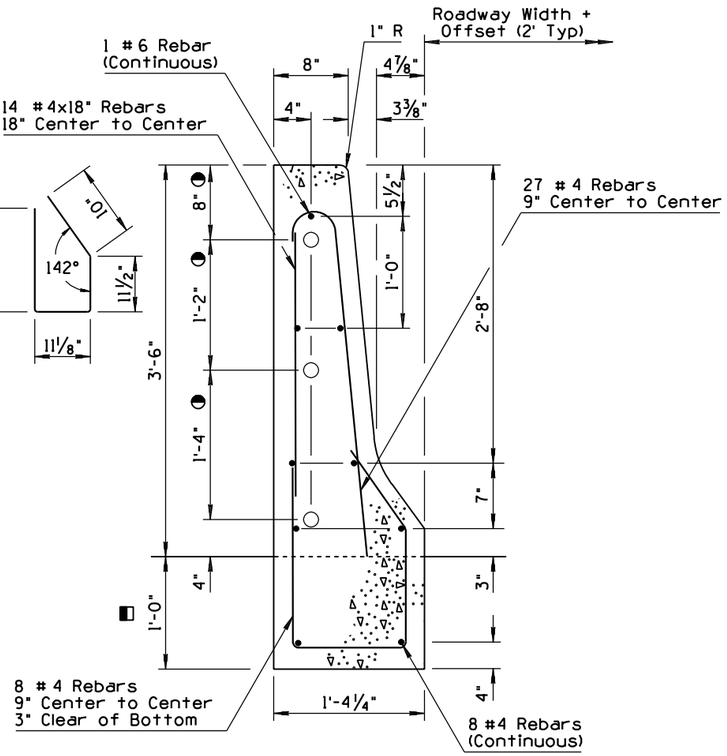

WITHOUT CURB
SECTION A-A

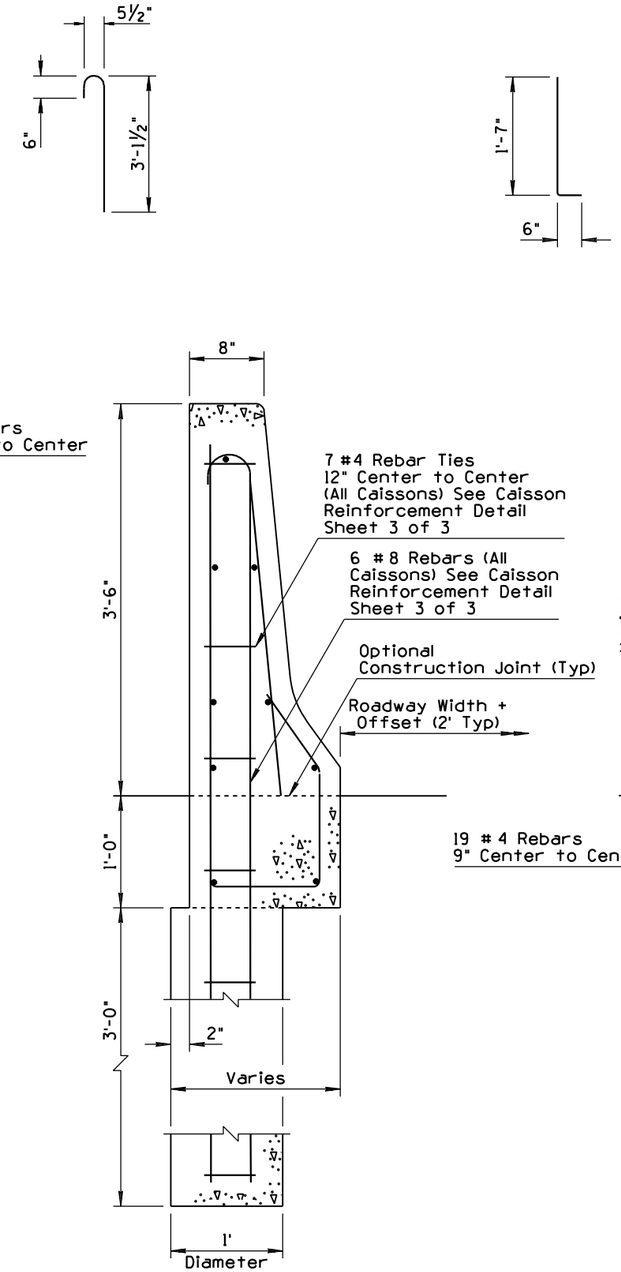

WITHOUT CURB
SECTION B-B

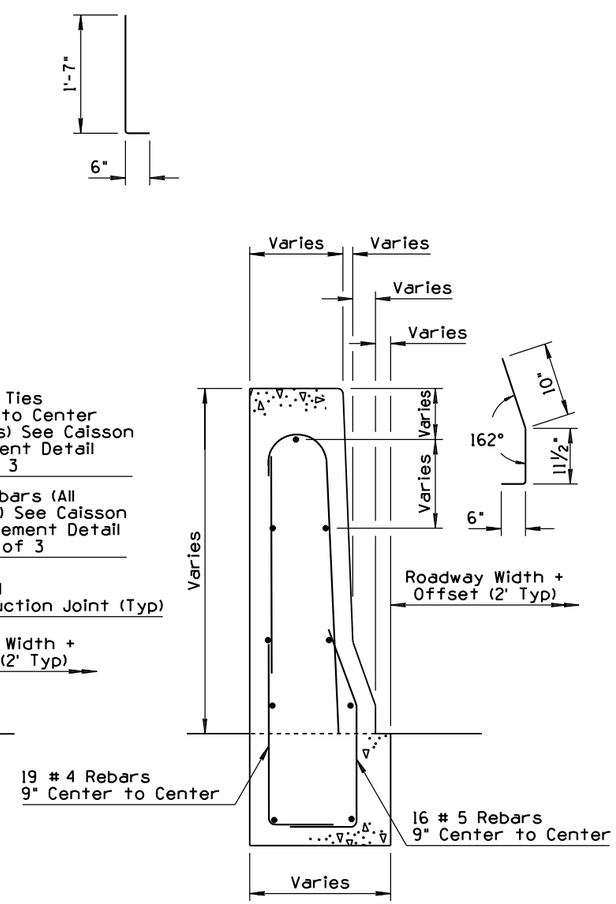

WITHOUT CURB

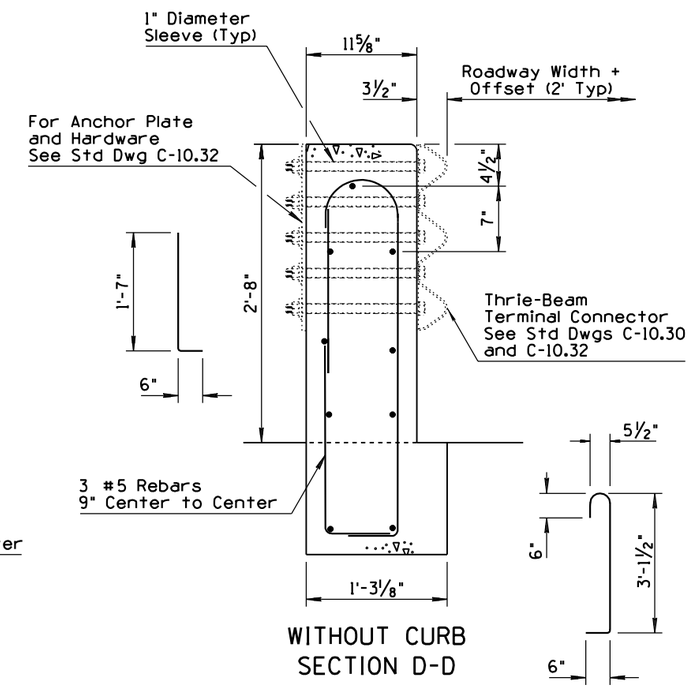

WITHOUT CURB
SECTION D-D

APPROVED FOR DESIGN	STATE OF ARIZONA DEPARTMENT OF TRANSPORTATION ROADWAY STANDARD DRAWINGS	REV.
Mary Vipauna		9/04
APPROVED FOR DISTRIBUTION	CONCRETE HALF-BARRIER TRANSITION TO VERTICAL 42" TO 32" TYPE 'F' WITH CAISSONS	DRAWING NO. ① C-10.72 Sheet 2 of 3

NO	DESCRIPTION OF REVISIONS	MADE BY	DATE
1	REVISED TITLE	RLF	9/04
2	REMOVED ANCHOR PLATE DETAIL	RLF	9/04
3			
4			

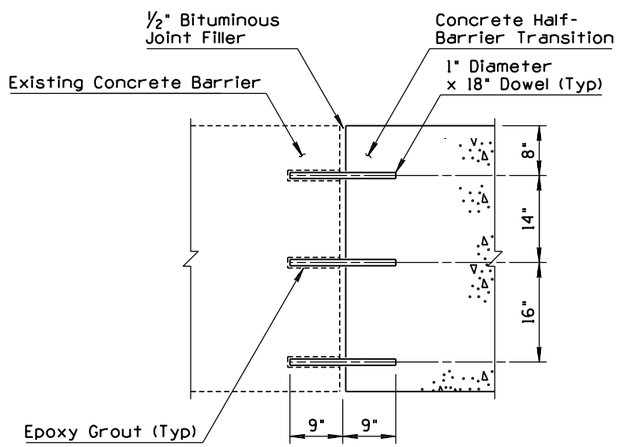

JOINT ASSEMBLY

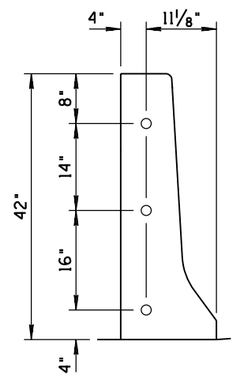

DOWEL LOCATIONS

CONSTRUCTION JOINT DETAIL
(OPTIONAL)

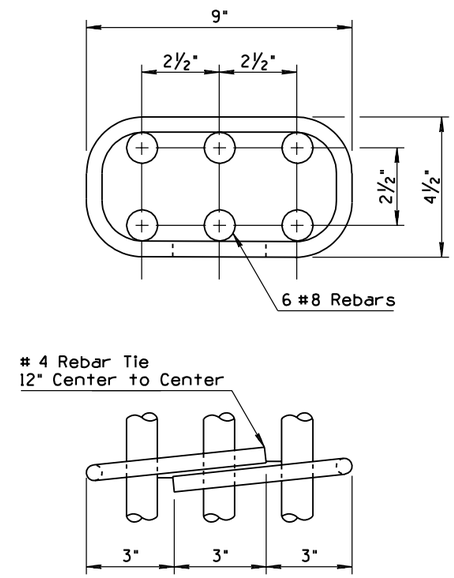

CAISSON REINFORCEMENT

②

APPROVED FOR DESIGN	STATE OF ARIZONA DEPARTMENT OF TRANSPORTATION ROADWAY STANDARD DRAWINGS	REV.
Mary Viparina		9/04
APPROVED FOR DISTRIBUTION	CONCRETE HALF-BARRIER TRANSITION TO VERTICAL 42" TO 32" TYPE 'F' WITH CAISSONS ①	DRAWING NO. C-10.72 Sheet 3 of 3

NO	DESCRIPTION OF REVISIONS	MADE BY	DATE
1	REISSUED STANDARD DRAWING	RLF	9/04
2			
3			
4			

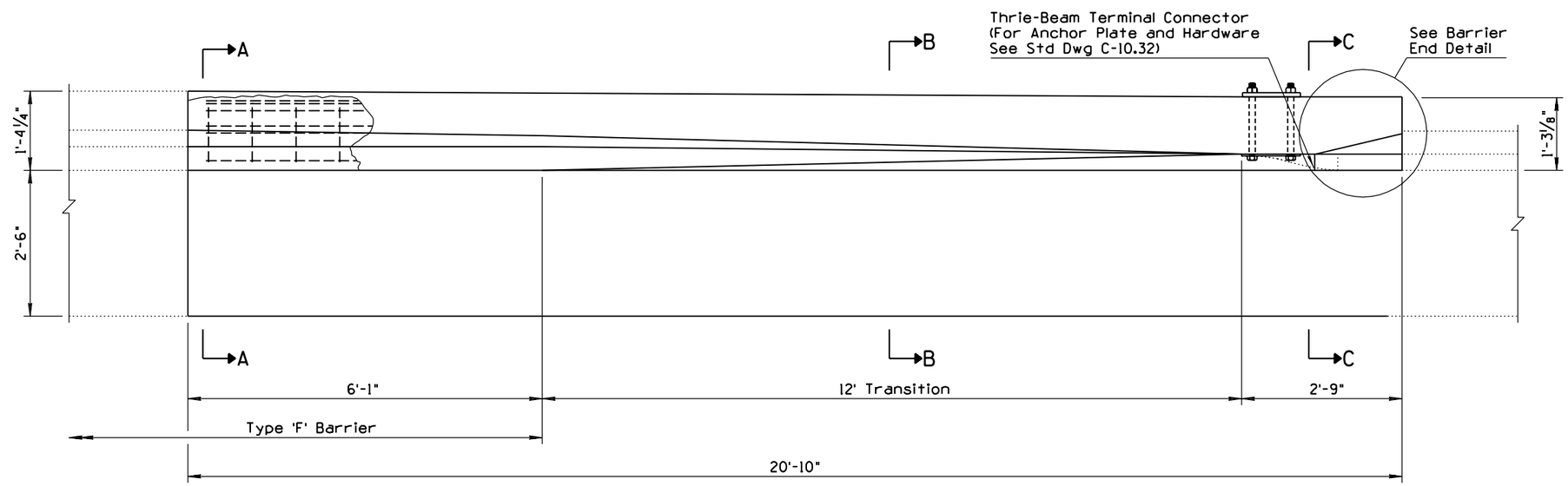

PLAN

GENERAL NOTES

1. Concrete shall be Class S, f'_c=4000 PSI.
2. All rebar shall have 2" minimum clear cover unless otherwise noted.
3. All bend dimensions for rebar are out-to-out of rebars.
4. Two-inch deep contraction joints shall be placed in the gutter at locations which match the joints in adjacent PCCP and at approximate 15' centers when adjacent to AC pavement. Joints shall be either hand tooled or sawn.

◧ 1'-0" Minimum or Match Thickness of Adjacant PCCP

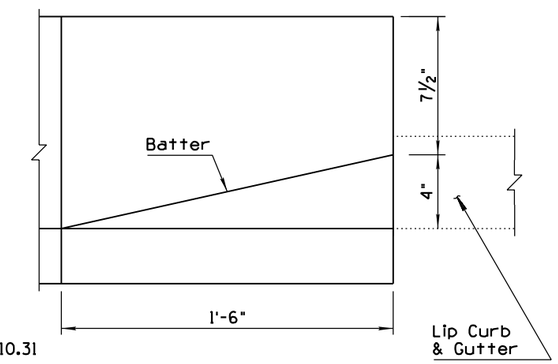

BARRIER END DETAIL

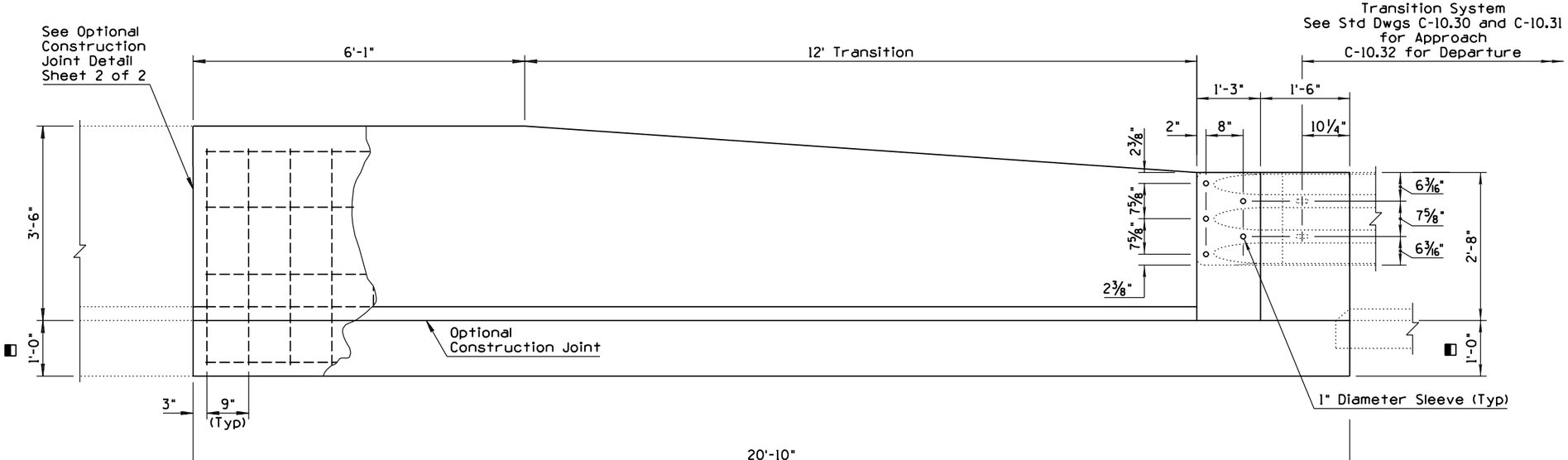

ELEVATION

BARRIER WITH CURB AND GUTTER

APPROVED FOR DESIGN	STATE OF ARIZONA DEPARTMENT OF TRANSPORTATION ROADWAY STANDARD DRAWINGS	REV.
		9/04
APPROVED FOR DISTRIBUTION	CONCRETE HALF-BARRIER TRANSITION TO VERTICAL 42" TO 32" TYPE 'F' WITH GUTTER	DRAWING NO. C-10.73 Sheet 1 of 2

NO	DESCRIPTION OF REVISIONS	MADE BY	DATE
1	REISSUED STD DWG	RLF	9/04
2			
3			
4			

GENERAL NOTES

1. See Section B-B for caisson reinforcement.

◑ See Optional Construction Joint Detail, Sheet 3 of 3

◧ 1'-0" Minimum or Match Thickness of Adjacant PCCP

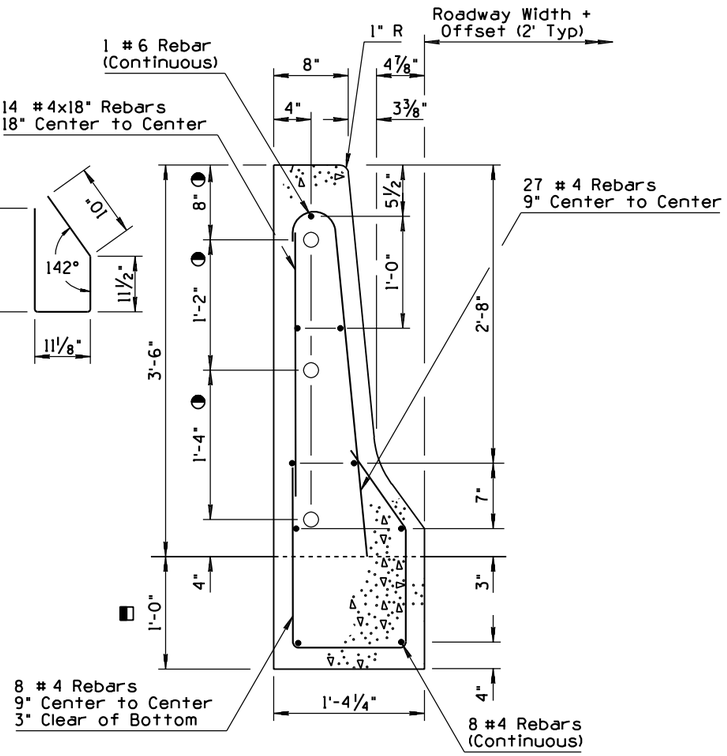

WITHOUT CURB
SECTION A-A

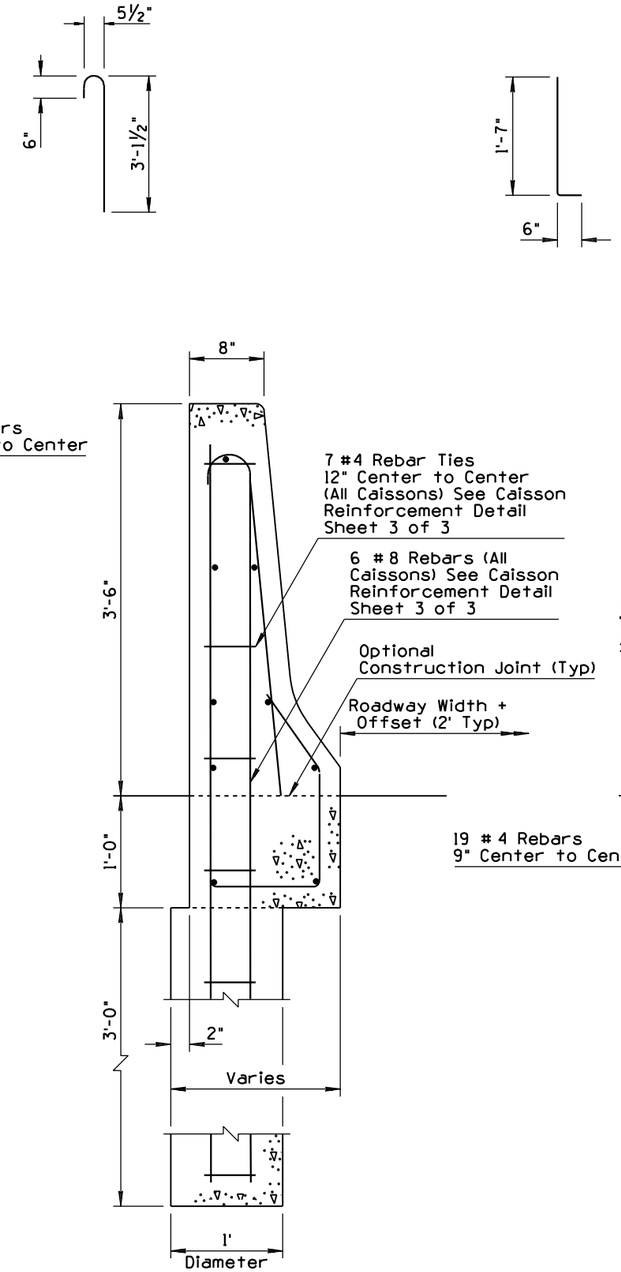

WITHOUT CURB
SECTION B-B

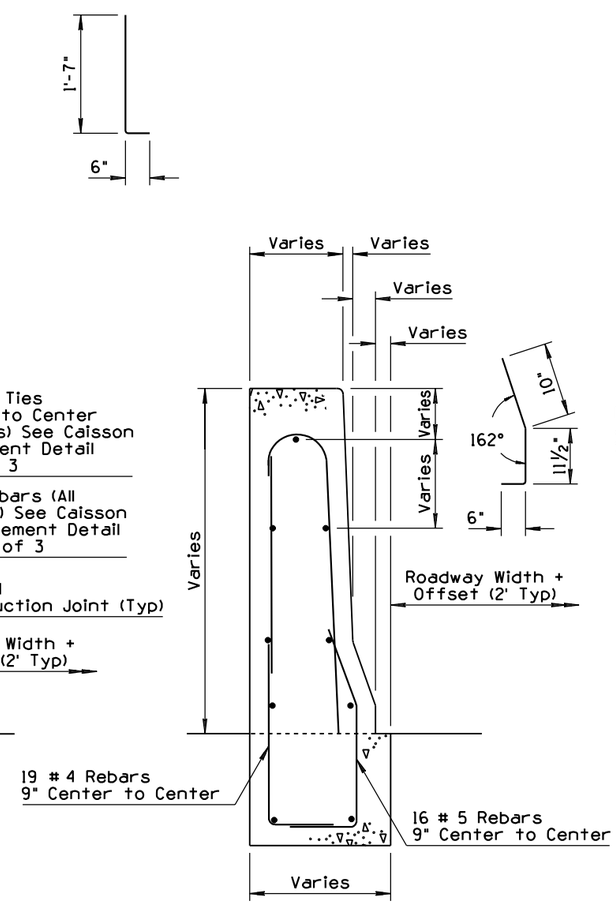

WITHOUT CURB

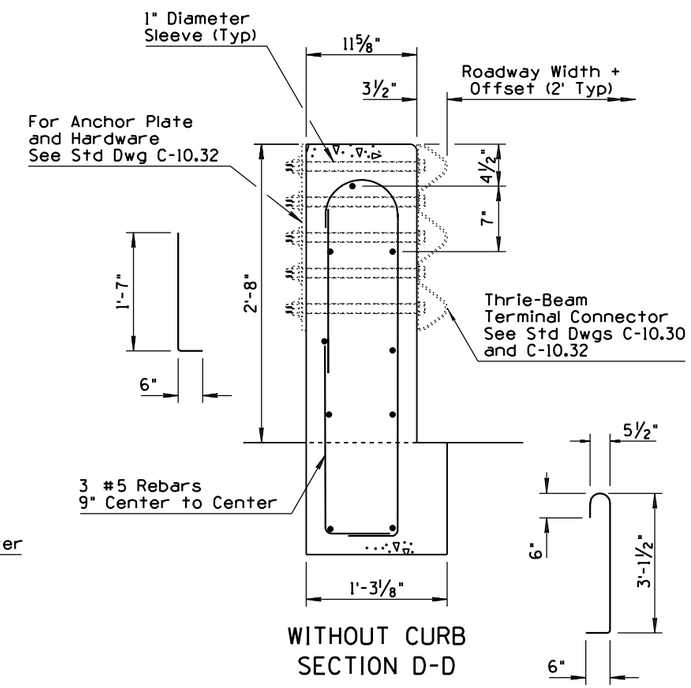

WITHOUT CURB
SECTION D-D

APPROVED FOR DESIGN	STATE OF ARIZONA DEPARTMENT OF TRANSPORTATION ROADWAY STANDARD DRAWINGS	REV.
Mary Vipauna		9/04
APPROVED FOR DISTRIBUTION	CONCRETE HALF-BARRIER TRANSITION TO VERTICAL 42" TO 32" TYPE 'F' WITH CAISSONS	DRAWING NO. ① C-10.72 Sheet 2 of 3

NO	DESCRIPTION OF REVISIONS	MADE BY	DATE
1	REVISED TITLE	RLF	9/04
2	REMOVED ANCHOR PLATE DETAIL	RLF	9/04
3			
4			

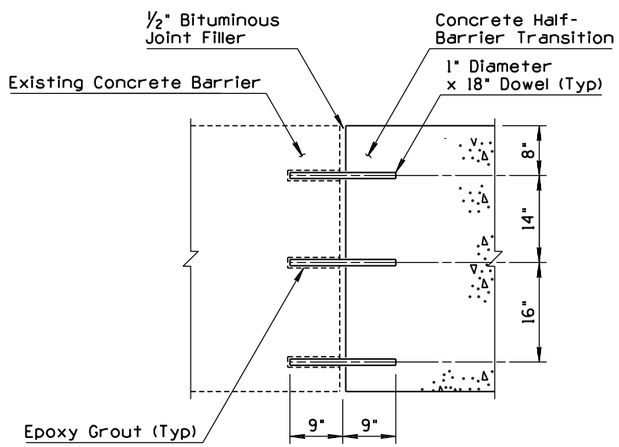

JOINT ASSEMBLY

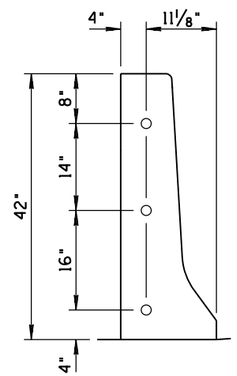

DOWEL LOCATIONS

CONSTRUCTION JOINT DETAIL
(OPTIONAL)

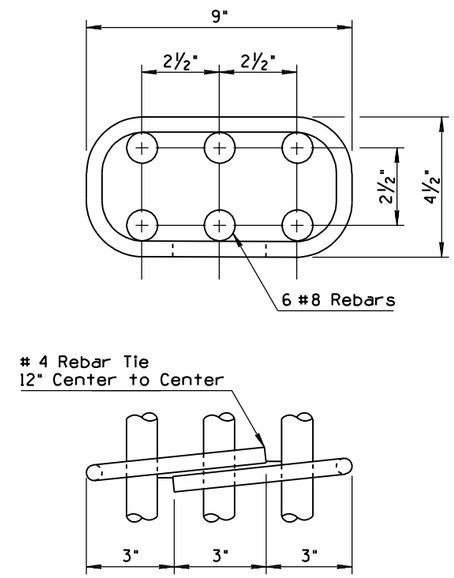

CAISSON REINFORCEMENT

②

APPROVED FOR DESIGN	STATE OF ARIZONA DEPARTMENT OF TRANSPORTATION ROADWAY STANDARD DRAWINGS	REV.
Mary Viparina		9/04
APPROVED FOR DISTRIBUTION	CONCRETE HALF-BARRIER TRANSITION TO VERTICAL 42" TO 32" TYPE 'F' WITH CAISSONS ①	DRAWING NO. C-10.72 Sheet 3 of 3

NO	DESCRIPTION OF REVISIONS	MADE BY	DATE
1	REISSUED STANDARD DRAWING	RLF	9/04
2			
3			
4			

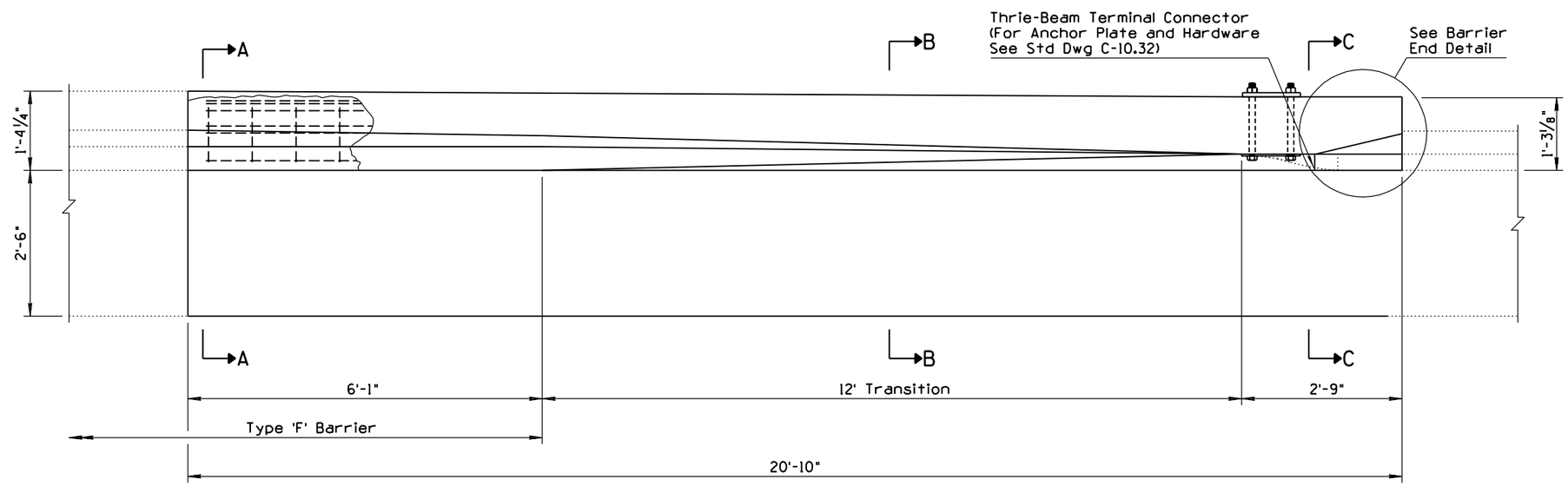

PLAN

GENERAL NOTES

1. Concrete shall be Class S, f'_c=4000 PSI.
2. All rebar shall have 2" minimum clear cover unless otherwise noted.
3. All bend dimensions for rebar are out-to-out of rebars.
4. Two-inch deep contraction joints shall be placed in the gutter at locations which match the joints in adjacent PCCP and at approximate 15' centers when adjacent to AC pavement. Joints shall be either hand tooled or sawn.

◧ 1'-0" Minimum or Match Thickness of Adjacant PCCP

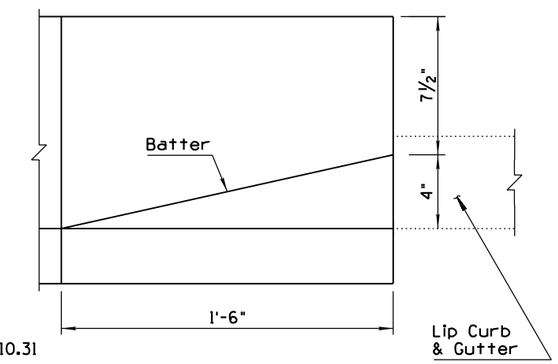

BARRIER END DETAIL

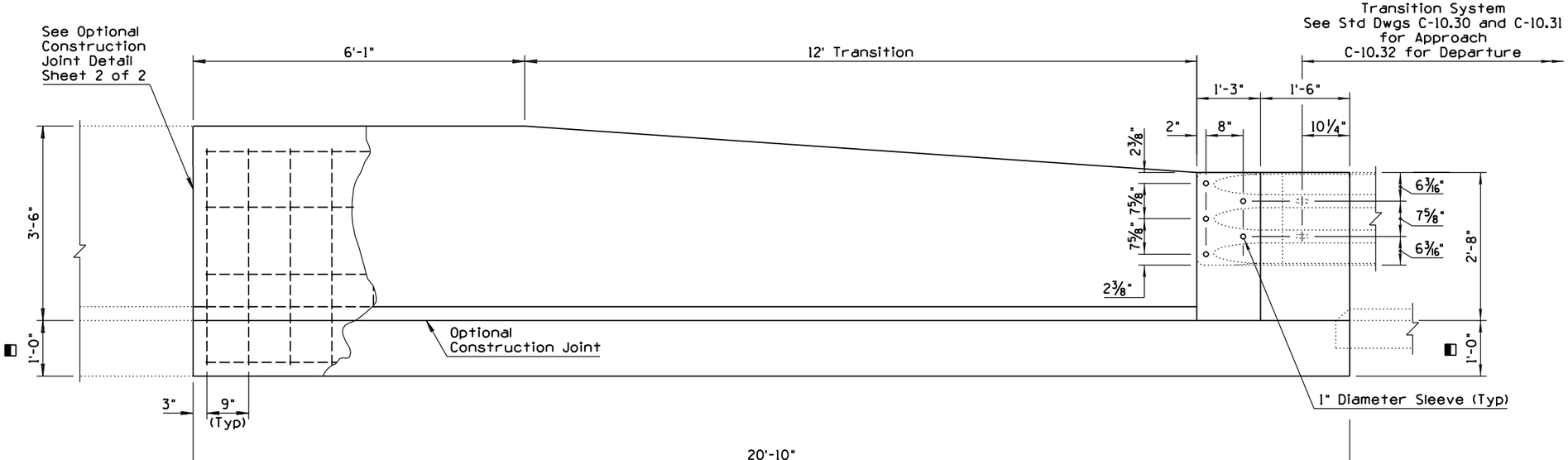

ELEVATION

BARRIER WITH CURB AND GUTTER

APPROVED FOR DESIGN	STATE OF ARIZONA DEPARTMENT OF TRANSPORTATION ROADWAY STANDARD DRAWINGS	REV.
		9/04
APPROVED FOR DISTRIBUTION	CONCRETE HALF-BARRIER TRANSITION TO VERTICAL 42" TO 32" TYPE 'F' WITH GUTTER	DRAWING NO. C-10.73 Sheet 1 of 2

NO	DESCRIPTION OF REVISIONS	MADE BY	DATE
1	REVISED TITLE	RLF	9/04
2	ADDED REFERENCE	RLF	9/04
3	REMOVED ANCHOR PLATE DETAIL	RLF	9/04
4			

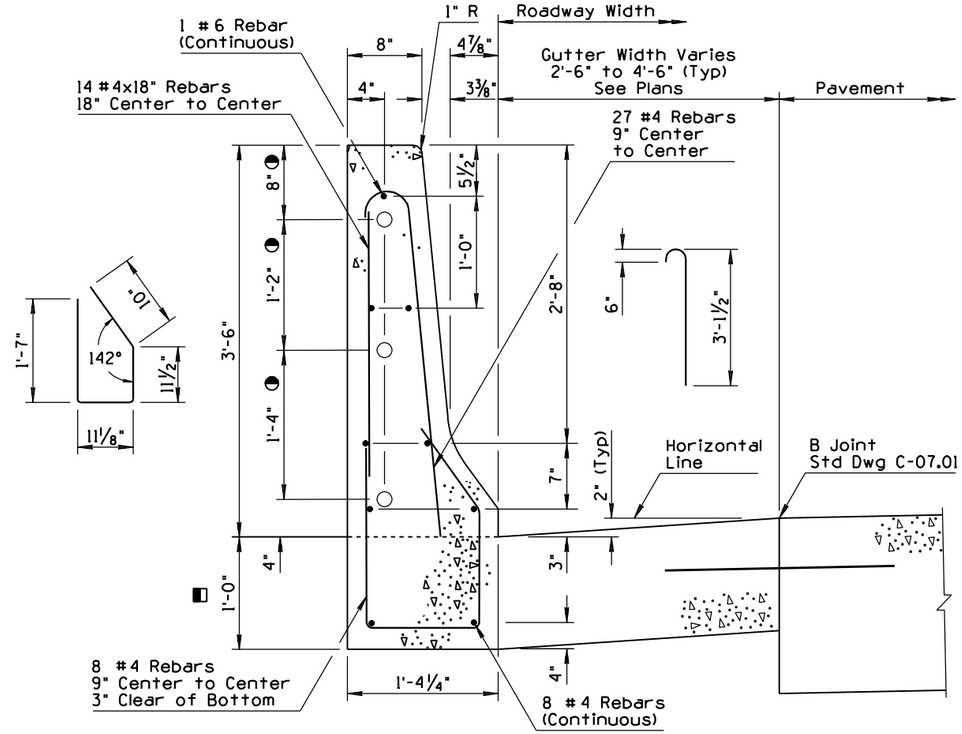

SECTION A-A

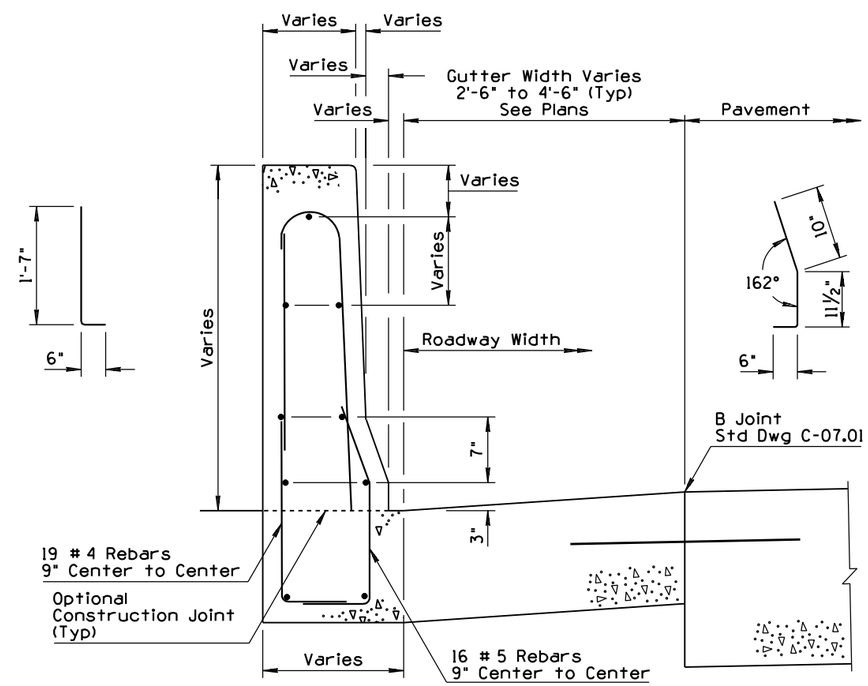

SECTION B-B

◑ See Optional Construction Joint Detail

◧ 1'-0" Minimum or Match Thickness of Adjacant PCCP

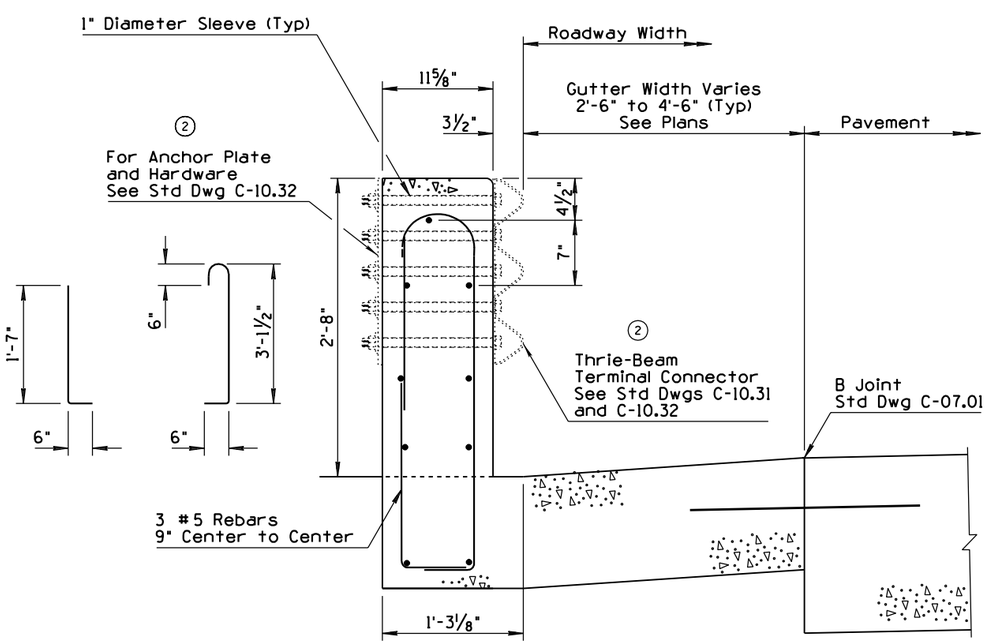

SECTION C-C

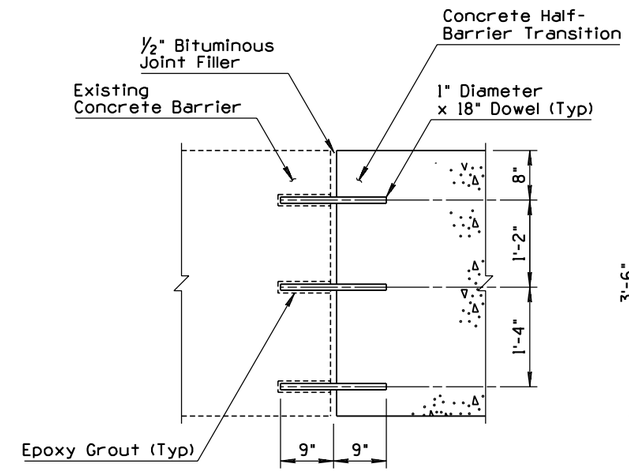

JOINT ASSEMBLY

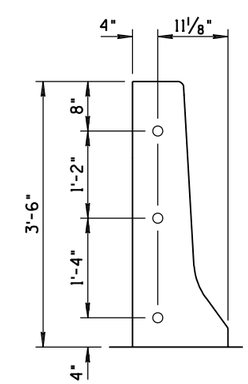

DOWEL LOCATIONS

③

CONSTRUCTION JOINT DETAIL (OPTIONAL)

APPROVED FOR DESIGN	STATE OF ARIZONA DEPARTMENT OF TRANSPORTATION ROADWAY STANDARD DRAWINGS	REV. 9/04
APPROVED FOR DISTRIBUTION	CONCRETE HALF-BARRIER TRANSITION TO VERTICAL 42" TO 32" TYPE 'F' WITH GUTTER ①	DRAWING NO. C-10.73 Sheet 2 of 2

NO	DESCRIPTION OF REVISIONS	MADE BY	DATE
1	RENAMED STD DWG FROM C-10.86 & REVISED TITLE	RLF	9/04
2	REVISED GENERAL NOTE 2	RLF	9/04
3	REVISED SECTION A-A	RLF	9/04
4			

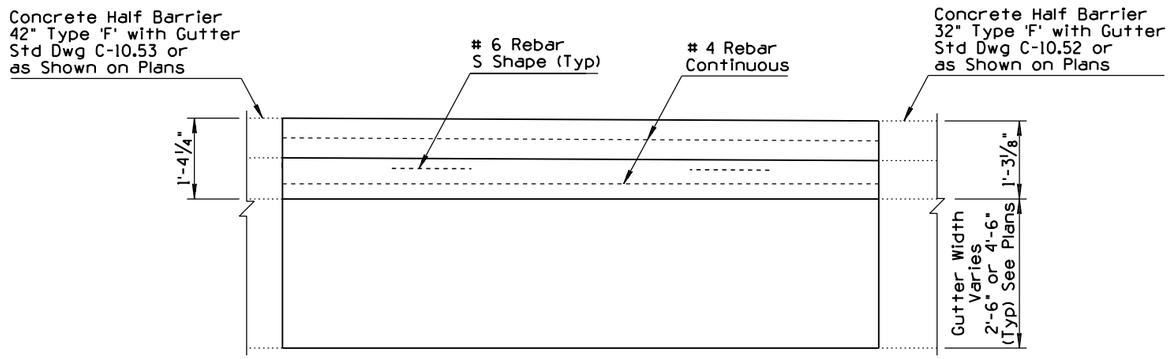

PLAN

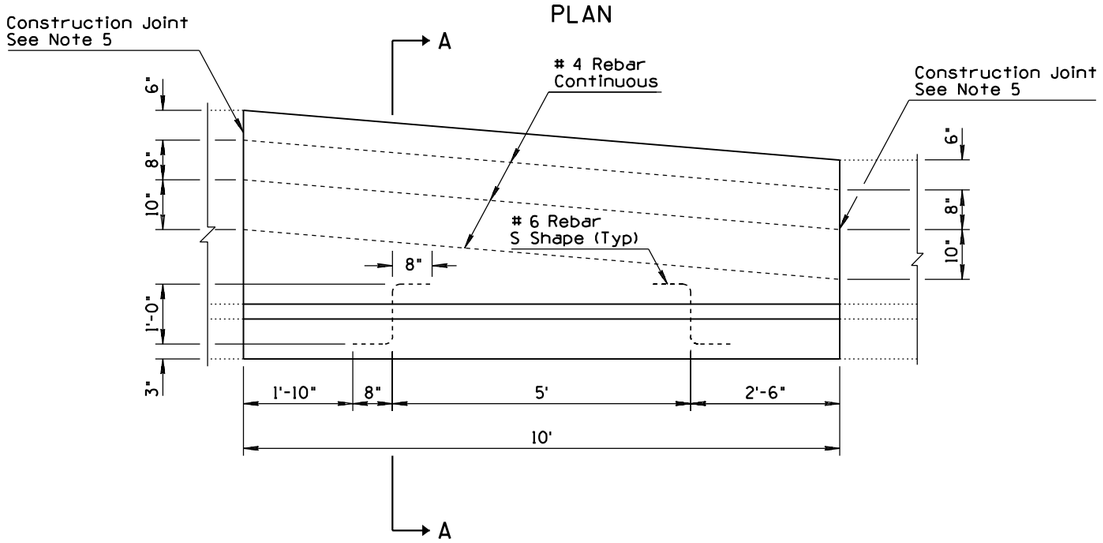

ELEVATION

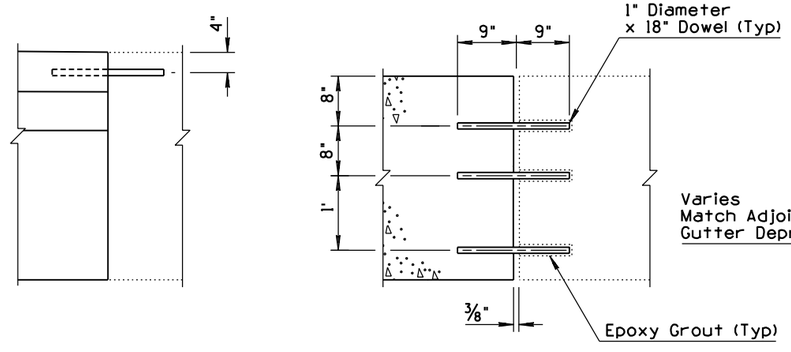

PLAN

ELEVATION

CONSTRUCTION JOINT DETAIL
(OPTIONAL)

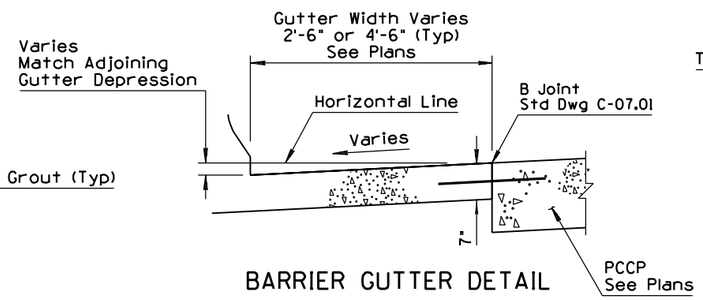

BARRIER GUTTER DETAIL

GENERAL NOTES

1. Half-Barrier Transition shall be constructed by the formed cast-in-place method.
2. (2) Concrete shall be Class S, f'c=4000 PSI.
3. If the footing and barrier are cast monolithically, # 6 S shape rebars are not required.
4. Barrier width shall not exceed the barrier footing width nor overhang the adjacent pavement.
5. # 4 rebar shall extend 12" past the construction joint at the completion of the day's pour.
6. Thickness of gutter, "D" can be adjusted to match the PCCP thickness, as approved by the Engineer.
7. Two-inch deep construction joints shall be placed in the gutter at locations which match the joints in adjacent PCCP and at approximate 15' centers when adjacent to AC pavement. Joints shall be either hand tooled or sawn.

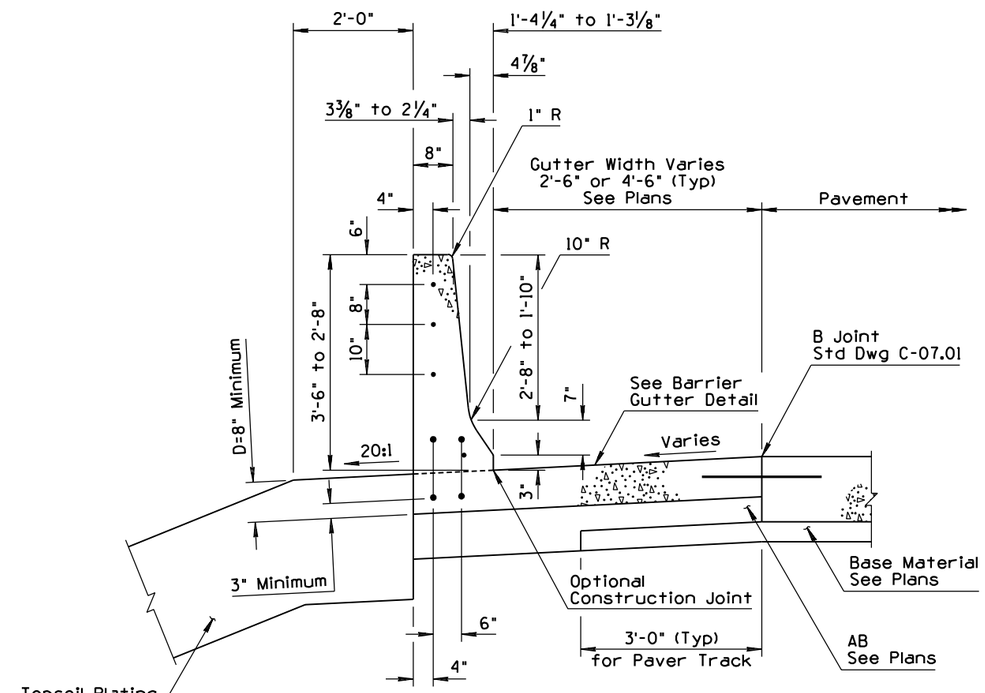

(3)

SECTION A-A

APPROVED FOR DESIGN	STATE OF ARIZONA DEPARTMENT OF TRANSPORTATION ROADWAY STANDARD DRAWINGS	REV.
Mary Viparina		9/04
APPROVED FOR DISTRIBUTION	CONCRETE HALF-BARRIER TRANSITION 42" TO 32" TYPE 'F' (1)	DRAWING NO. (1) C-10.74

NO	DESCRIPTION OF REVISIONS	MADE BY	DATE
1	REVISED WIDTH OF TRANSITION	RLF	9/04
2	REVISED GENERAL NOTE	RLF	9/04
3	REVISED TITLE	RLF	9/04
4			

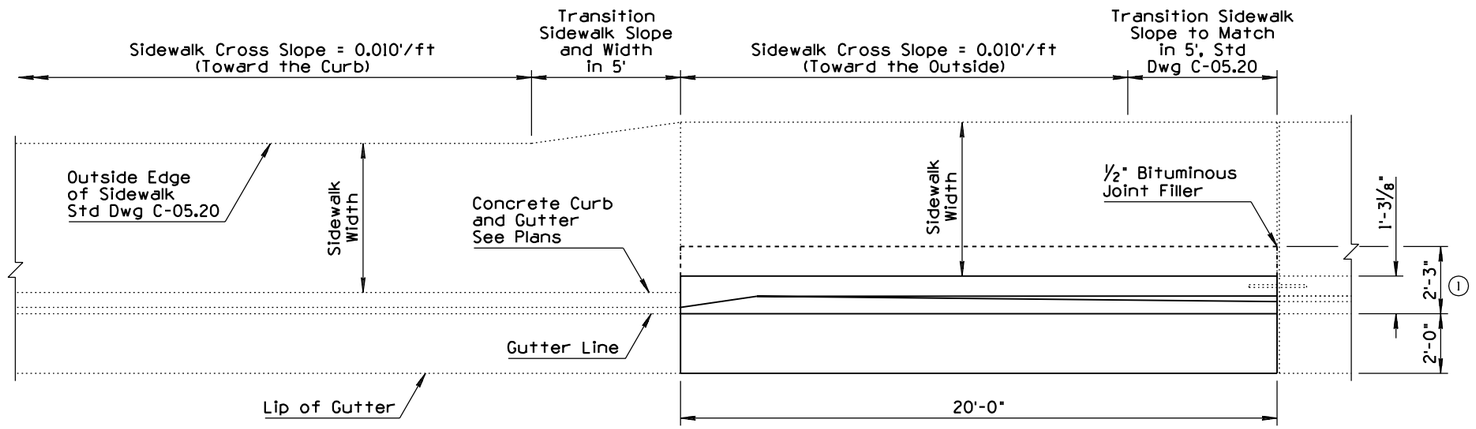

PLAN VIEW

Traffic

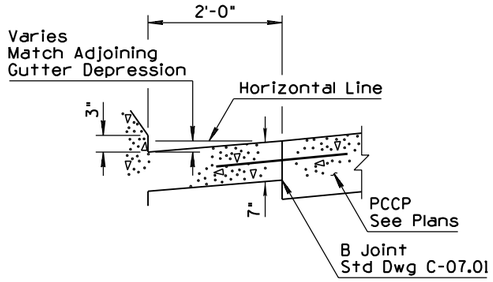

BARRIER GUTTER DETAIL

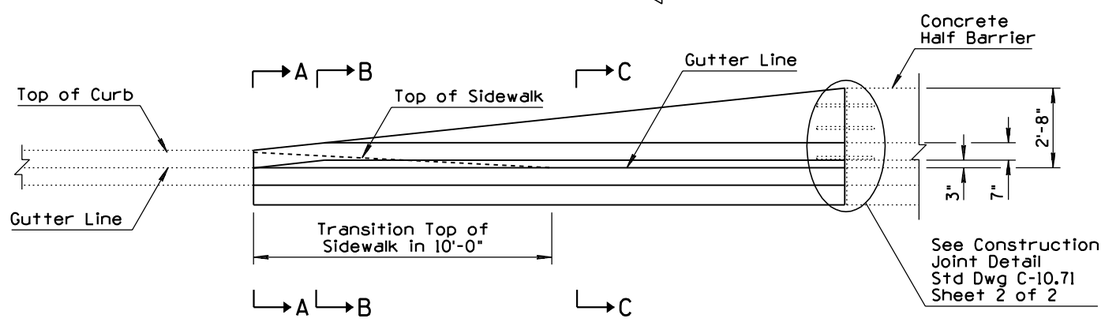

ELEVATION

GENERAL NOTES

(2) 1. All concrete shall be Class S, f'c=4000 PSI.

2. All rebar shall conform to Std Spec 1003.

3. All rebar shall have 2" minimum clear cover unless otherwise noted.

4. See drainage sheets for slotted drain and catch basin details.

5. Barrier transition shall match both adjoining curb and gutter and concrete Half Barrier.

6. See Std Dwg C-05.20 for sidewalk construction.

7. All bend dimensions for rebar are out-to-out of rebars.

8. Two-inch deep contraction joints shall be placed in the gutter at locations which match the joints in adjacent PCCP and at approximate 15' centers when adjacent to AC pavement. Joints shall be either hand tooled or sawn.

◧ 10¼" to 8"

■ 1'-0⅝" to 10¼"

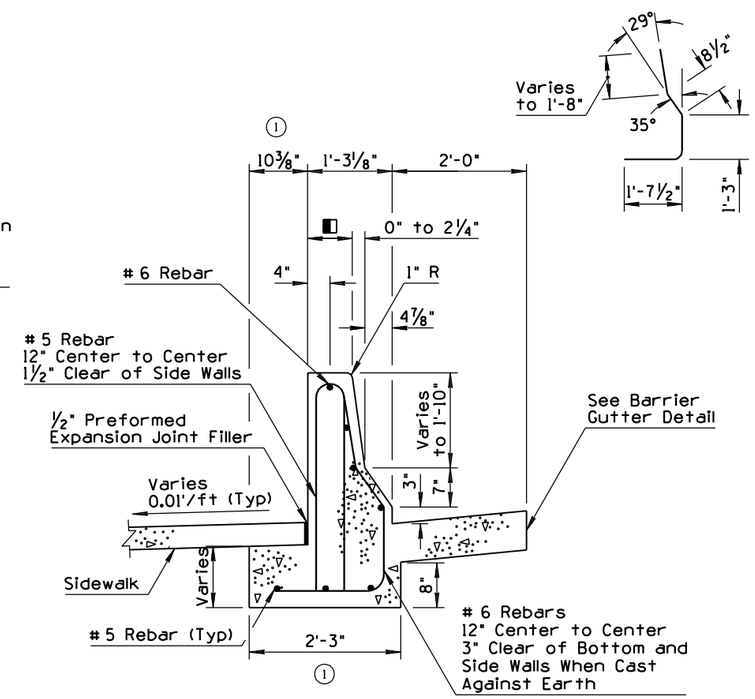

SECTION C-C

TRANSITION TO VERTICAL TYPE CURB

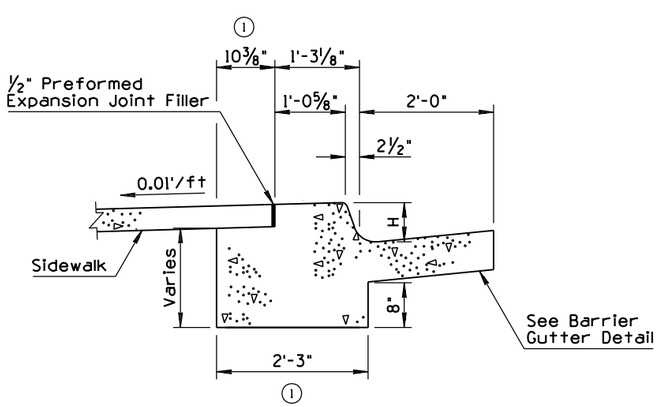

SECTION A-A

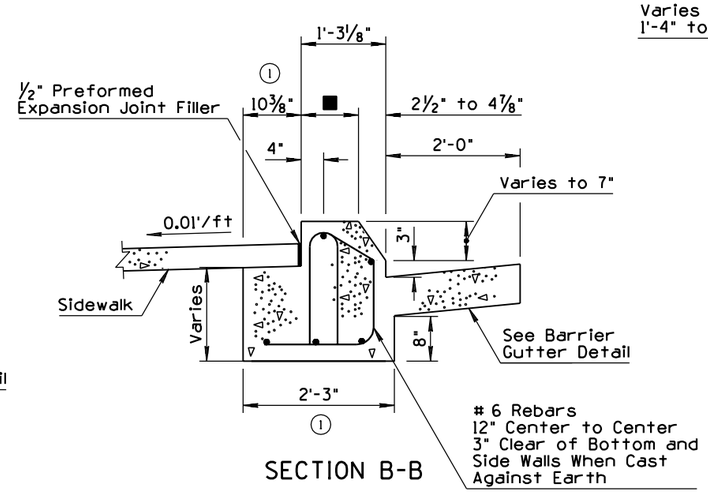

SECTION B-B

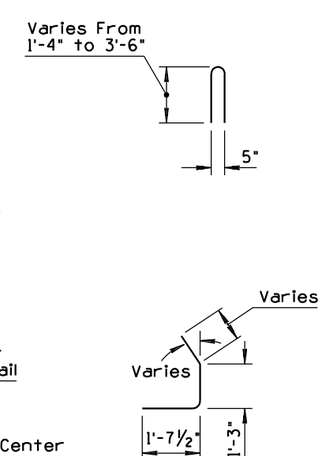

APPROVED FOR DESIGN	STATE OF ARIZONA DEPARTMENT OF TRANSPORTATION ROADWAY STANDARD DRAWINGS	REV.
		9/04
APPROVED FOR DISTRIBUTION	CONCRETE HALF-BARRIER TRANSITION TYPE 'F' TANGENT DEPARTURE TYPE 1 (3)	DRAWING NO. C-10.75 Sheet 1 of 2

NO	DESCRIPTION OF REVISIONS	MADE BY	DATE
1	REVISED GENERAL NOTE 1	RLF	9/04
2	ADDED BARRIER GUTTER DETAIL	RLF	9/04
3	REVISED WIDTH OF TRANSITION	RLF	9/04
4	REVISED TITLE	RLF	9/04

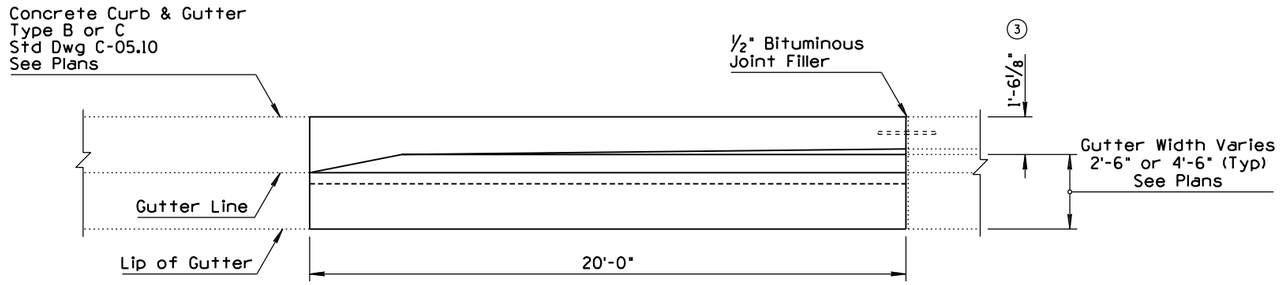

PLAN VIEW

Traffic

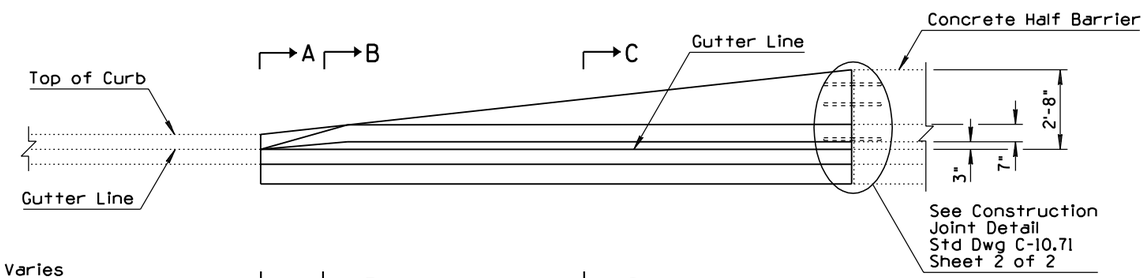

ELEVATION

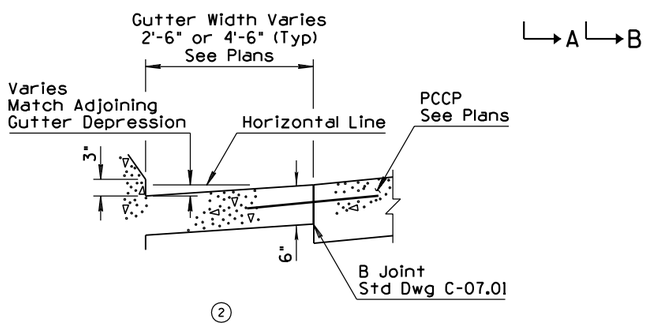

BARRIER GUTTER DETAIL

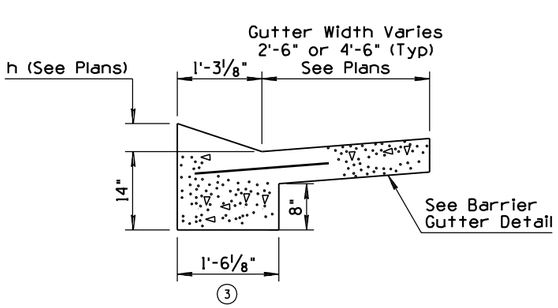

SECTION A-A

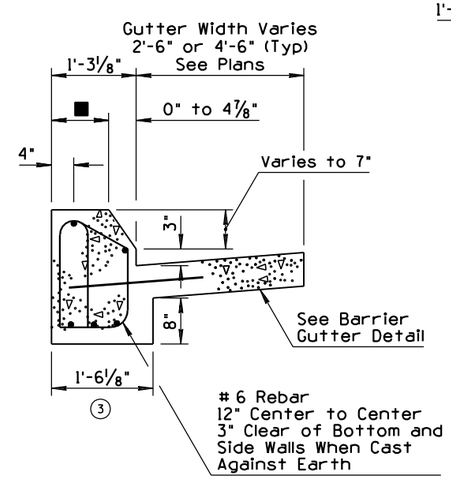

SECTION B-B

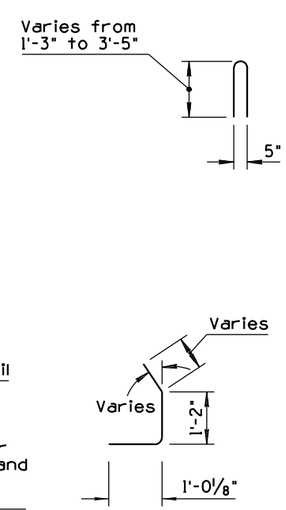

GENERAL NOTES

1. All concrete shall be Class S f'c=4000 PSI.
2. All rebar shall conform to Std Spec 1003.
3. All rebar shall have 2" minimum clear cover unless otherwise noted.
4. See drainage sheets for slotted drain and catch basin details.
5. Barrier transition shall match both adjoining curb and gutter and concrete Half Barrier.
6. All bend dimensions for rebar are out-to-out of bars.
7. Two-inch deep contraction joints shall be placed in the gutter at locations which match the joints in adjacent PCCP and at approximate 15' centers when adjacent to AC pavement. Joints shall be either hand tooled or sawn.

   ◧ Varies 10¼" to 8"

   ■ Varies 1'-3⅛" to 10¼"

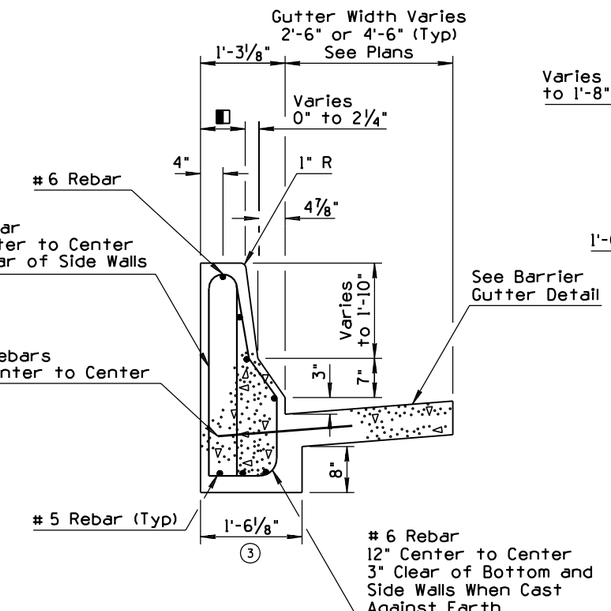

SECTION C-C

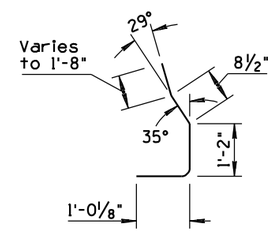

TRANSITION TO FREEWAY CURB

APPROVED FOR DESIGN	STATE OF ARIZONA DEPARTMENT OF TRANSPORTATION ROADWAY STANDARD DRAWINGS	REV.
		9/04
APPROVED FOR DISTRIBUTION	CONCRETE HALF-BARRIER TRANSITION TYPE 'F' TANGENT DEPARTURE TYPE 2 ④	DRAWING NO. C-10.75 Sheet 2 of 2

NO	DESCRIPTION OF REVISIONS	MADE BY	DATE
1	REVISED GENERAL NOTE 1	RLF	9/04
2	ADDED BARRIER GUTTER DETAIL	RLF	9/04
3	REVISED TITLE	RLF	9/04
4	REVISED TYPE	RLF	9/04

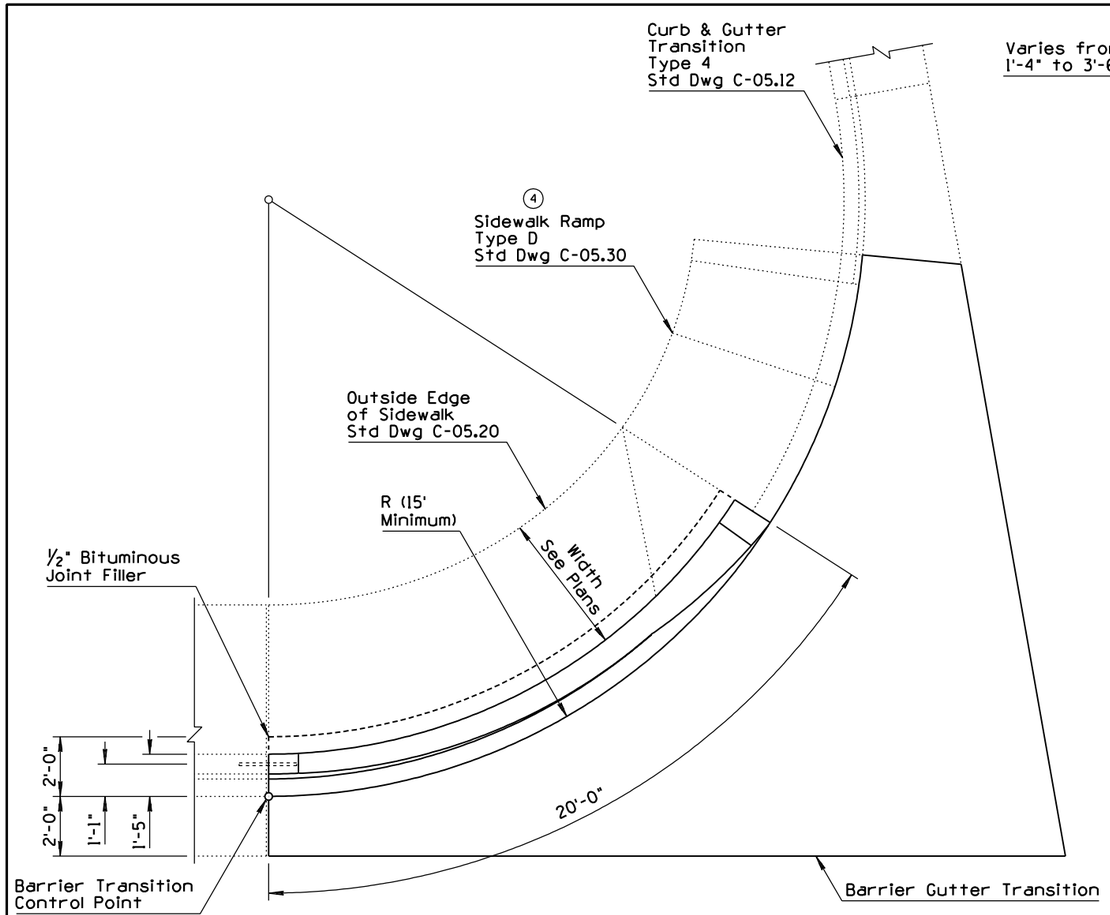

PLAN VIEW

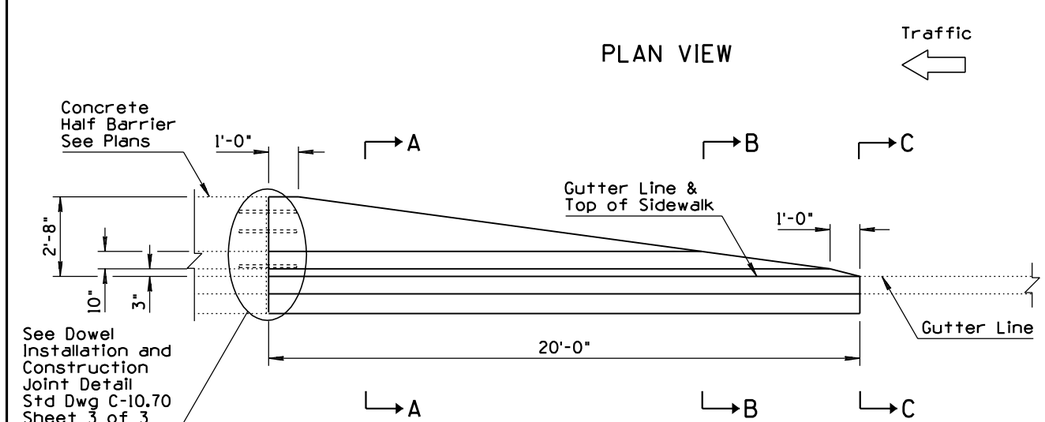

ELEVATION

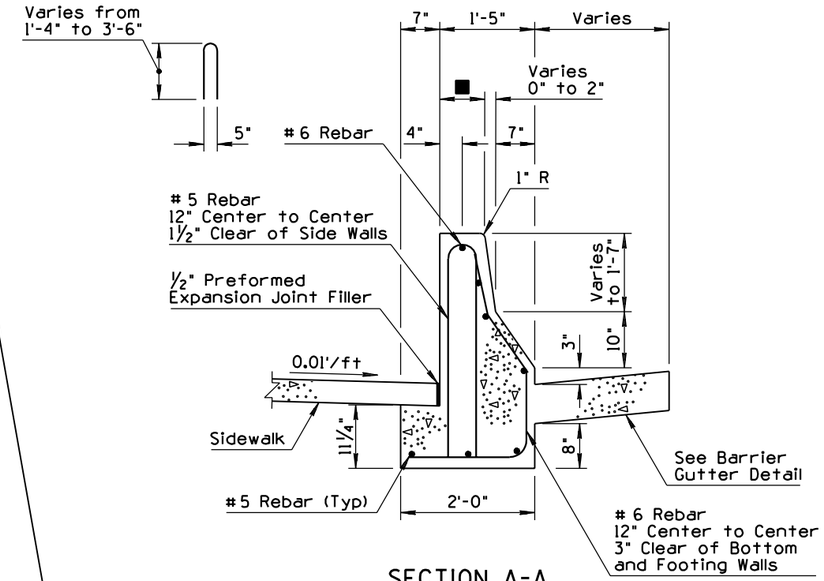

SECTION A-A

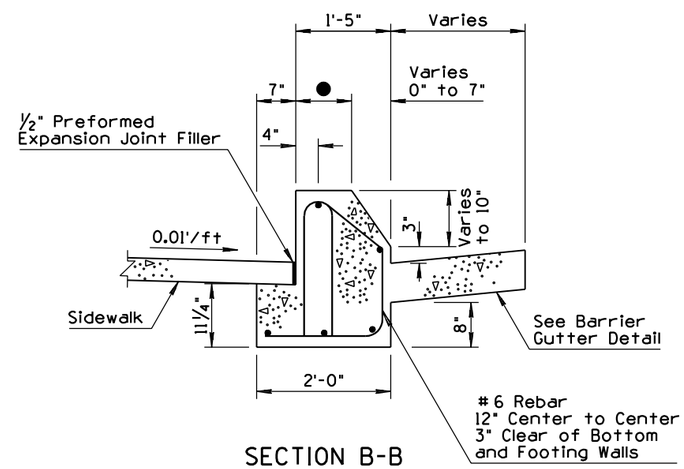

SECTION B-B

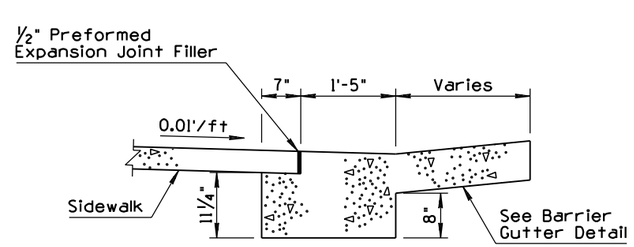

SECTION C-C

GENERAL NOTES

1. All concrete shall be Class S, f'c=4000 PSI.
2. All rebar shall conform to Std Spec 1003.
3. All rebar shall have 2" minimum clear cover unless otherwise noted.
4. See drainage sheets for slotted drain and catch basin details.
5. Barrier transition shall match the adjoining concrete half barrier.
6. See Std Dwg C-05.20 for sidewalk construction.
7. All bend dimensions for rebar are out-to-out of bars.

■ Varies 0" to 8"

● Varies 1'-5" to 10"

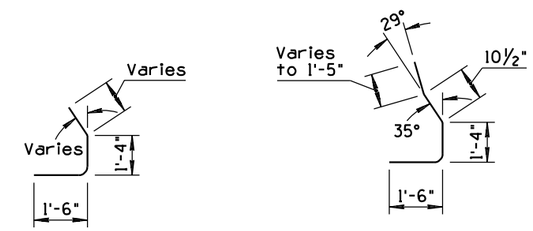

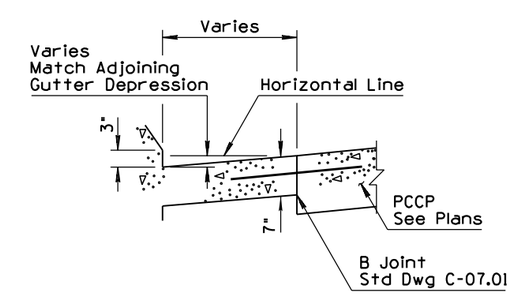

BARRIER GUTTER DETAIL

2

APPROVED FOR DESIGN	STATE OF ARIZONA DEPARTMENT OF TRANSPORTATION ROADWAY STANDARD DRAWINGS	REV.
		9/04
APPROVED FOR DISTRIBUTION	CONCRETE HALF-BARRIER TRANSITION TYPE 'F' AT RADIUS 32" TO 0" 3	DRAWING NO. C-10.76

NO	DESCRIPTION OF REVISIONS	MADE BY	DATE
1	RENAMED STD DWG FROM C-10.06 AND REVISED TITLE	RLF	9/04
2			
3			
4			

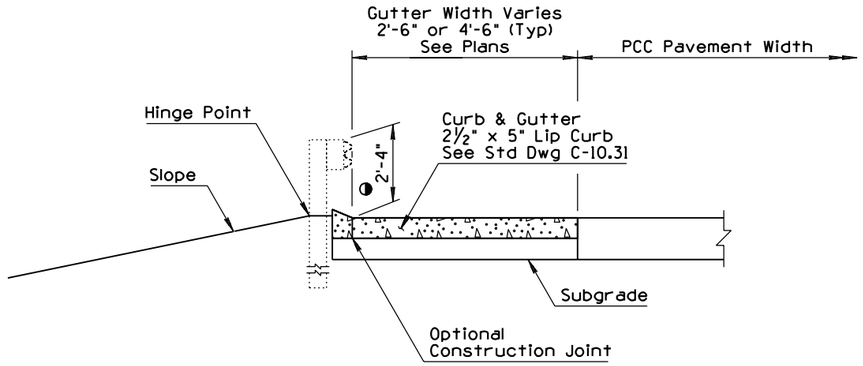

SECTION A-A

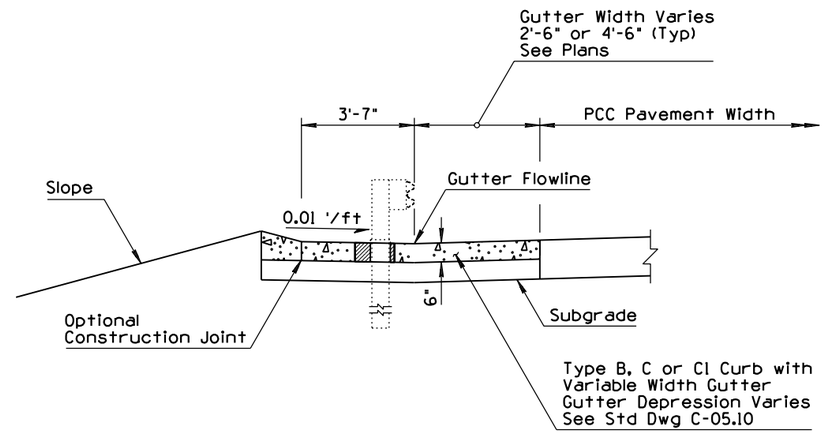

SECTION B-B

GENERAL NOTES

1. See plans and barrier summary sheets for location and type of guardrail and end treatments. Timber post installation shown.
2. See Std Dwgs C-05.10, 05.12, 10.01 and 10.02 for dimensions and details not shown.
3. Type B guardrail installation shown. For Type A guardrail installation, use Type D-1 Curb and Gutter instead of the Type D-2 Curb and Gutter shown.
4. See plans for type and location of drainage facilities.
5. Bituminous joint filler (½") shall be placed when the curb & gutter or concrete widening abuts slotted drains, catch basins, dados, barrier, etc. Scored joints, 2" in depth, shall be placed to match adjacent joints in PCCP or at 15' intervals when adjacent to AC or continuously reinforced concrete pavement.

◑ To Top of W-Beam Guardrail

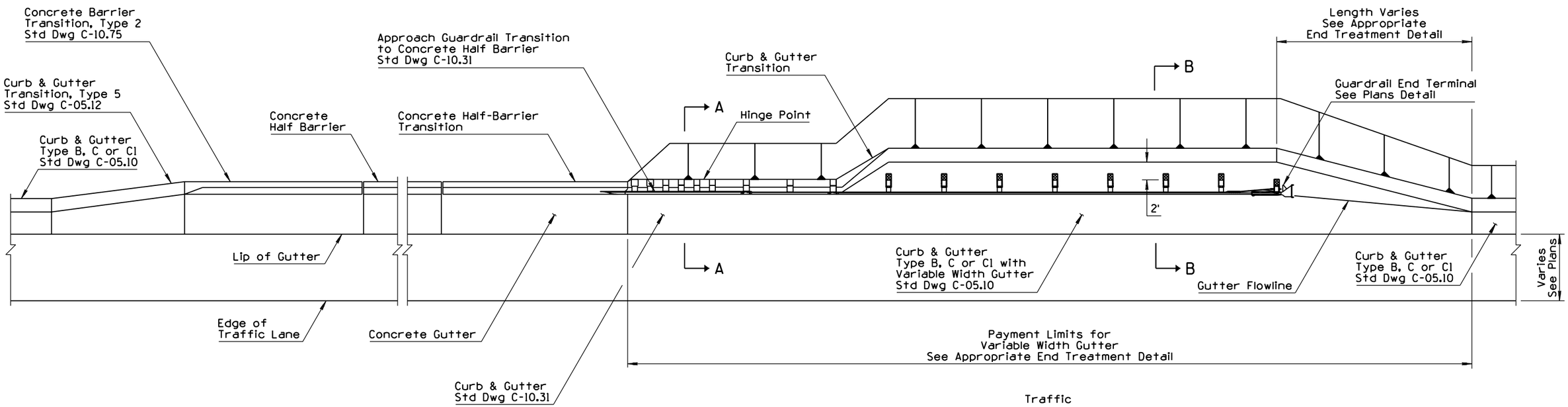

PLAN

APPROVED FOR DESIGN	STATE OF ARIZONA DEPARTMENT OF TRANSPORTATION ROADWAY STANDARD DRAWINGS	REV. 9/04
APPROVED FOR DISTRIBUTION	CONCRETE HALF-BARRIER TRANSITION END TERMINAL CURB AND GUTTER ①	DRAWING NO. C-10.77 ①

NO	DESCRIPTION OF REVISIONS	MADE BY	DATE
1	MODIFIED STANDARD	PNB	3/94
2			
3			
4			

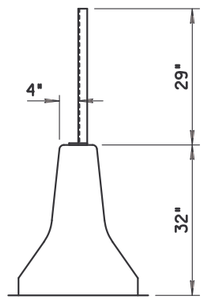

GLARE SCREEN
INSTALLATION ON
STANDARD MEDIAN BARRIER

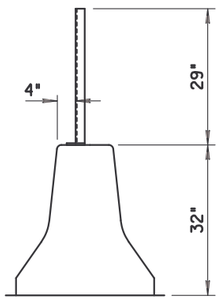

GLARE SCREEN
INSTALLATION ON
MEDIAN BARRIER TRANSITION

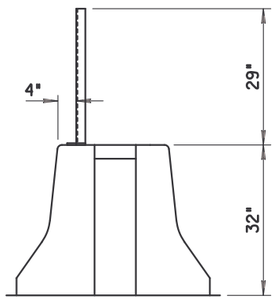

GLARE SCREEN
INSTALLATION ON
HALF BARRIER AT BRIDGE PIER

GENERAL NOTES

1. Posts shall be 12'-6" Center to Center. Structural steel shall conform to ASTM A36, galvanized in conformance with ASTM A123.
2. Hex head bolt shall conform to ASTM A307, galvanized in conformance with ASTM A153 Class C.
3. Helical spring lock washer shall conform to ASTM A313, galvanized in conformance with ASTM A153 Class C.
4. Tension wire: AWG number 9(0.148") galvanized in conformance with ASTM A116 Class 2.
5. Hog ring: AWG number 12 (0.105") galvanized in conformance with ASTM A116 Class 2. Fasten glare screen to top and bottom tension wire spaced approximately 2' apart.
6. Glare Screen: 18 gauge steel. ASTM A526, galvanized in accordance with ASTM A525/(G235), expanded to the following dimensions: 1.33" shortway of diamond and 4.0" longway of diamond (center to center of bridges) with a strand width of 0.250" angled at approximately 20° to the plane of the original sheet. Top edge to be shop curled and crimped on 12" center to center. Glare screen shall be installed such that flat portion of screen blocks light from headlights. See Direction Detail.
7. Splices allowed in glare screen at posts only, with one full diamond overlap.
8. Glare screen shall be constructed without interruption to the greatest degree possible.

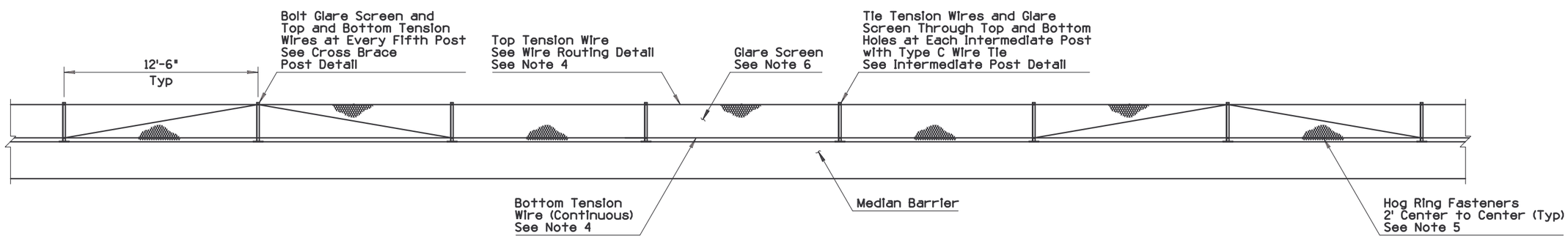

ELEVATION

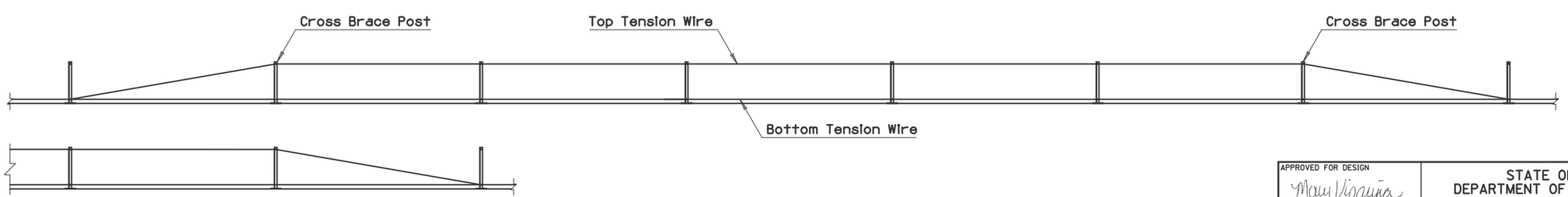

TENSION WIRE ROUTING DETAIL

APPROVED FOR DESIGN	STATE OF ARIZONA DEPARTMENT OF TRANSPORTATION ROADWAY STANDARD DRAWINGS	REV.
		3/94
APPROVED FOR DISTRIBUTION	1 GLARE SCREEN CONCRETE MEDIAN BARRIER	DRAWING NO. C-10.97 Sheet 1 of 3

NO	DESCRIPTION OF REVISIONS	MADE BY	DATE
1	REVISED DESIGNATION	RLF	9/04
2			
3			
4			

① ●- Indicates AASHTO, AGC & ARTBA Task Force 13 Report designation

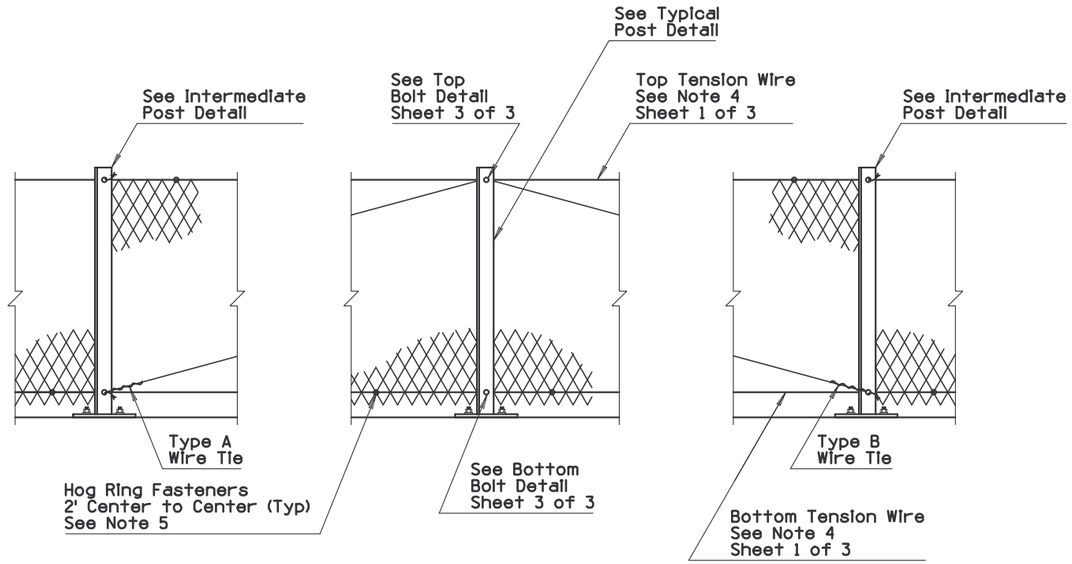

CROSS BRACE POST DETAIL

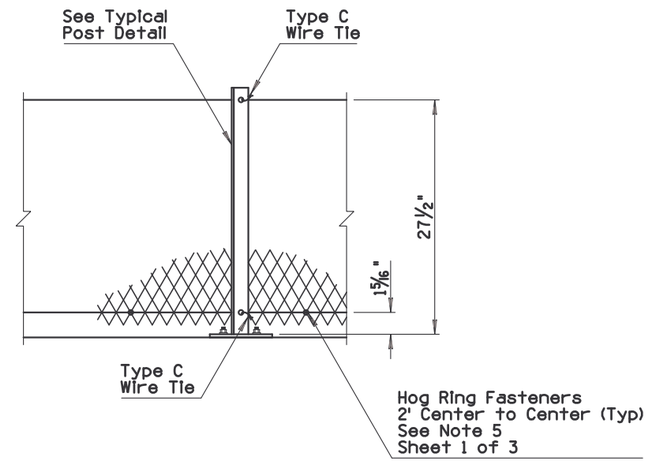

INTERMEDIATE POST DETAIL

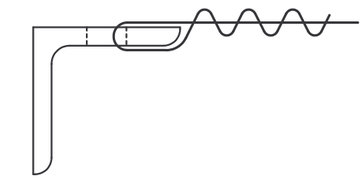

TYPE A WIRE TIE

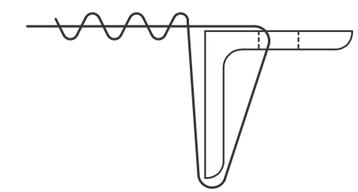

TYPE B WIRE TIE

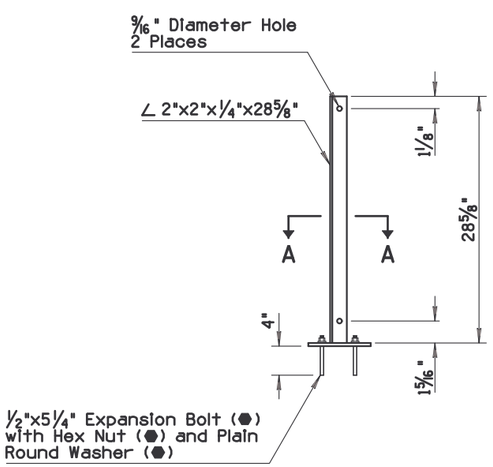

TYPICAL POST DETAIL

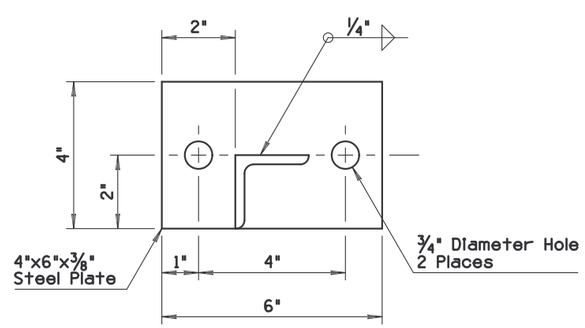

SECTION A-A

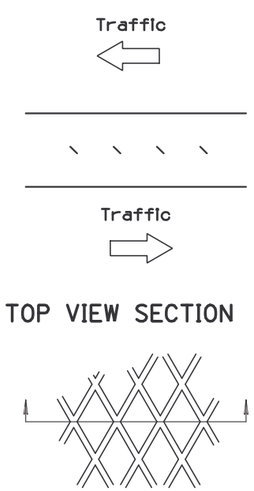

TOP VIEW SECTION

ELEVATION

DIRECTION DETAIL

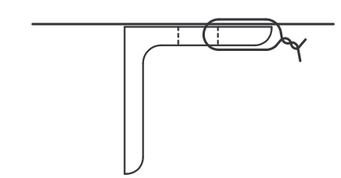

TYPE C WIRE TIE

APPROVED FOR DESIGN	STATE OF ARIZONA DEPARTMENT OF TRANSPORTATION ROADWAY STANDARD DRAWINGS	REV. 9/04
APPROVED FOR DISTRIBUTION	GLARE SCREEN CONCRETE MEDIAN BARRIER	DRAWING NO. C-10.97 Sheet 2 of 3

NO	DESCRIPTION OF REVISIONS	MADE BY	DATE
1	REVISED DESIGNATION	RLF	9/04
2			
3			
4			

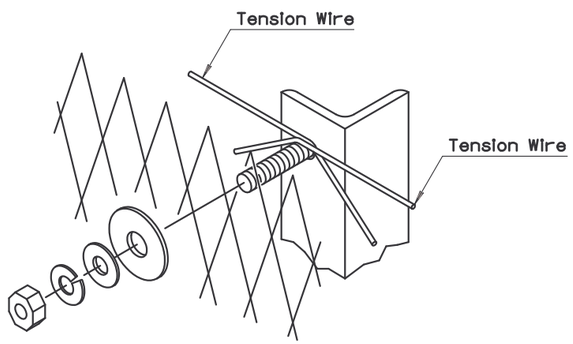

TOP BOLT DETAIL

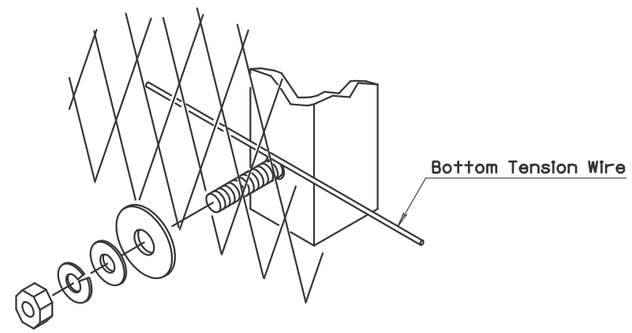

BOTTOM BOLT DETAIL

(1) ⬢- Indicates AASHTO, AGC & ARTBA Task Force 13 Report designation

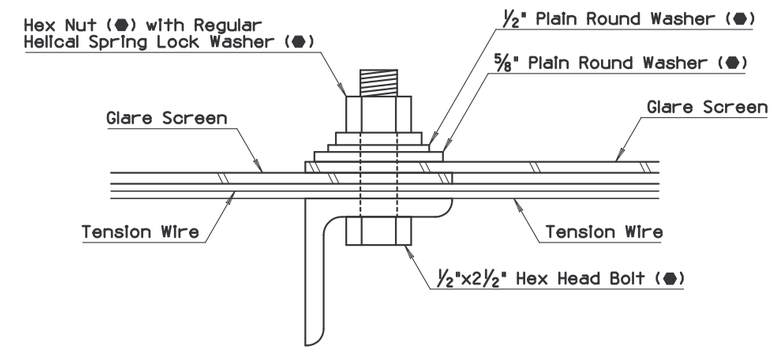

TOP BOLT SECTION

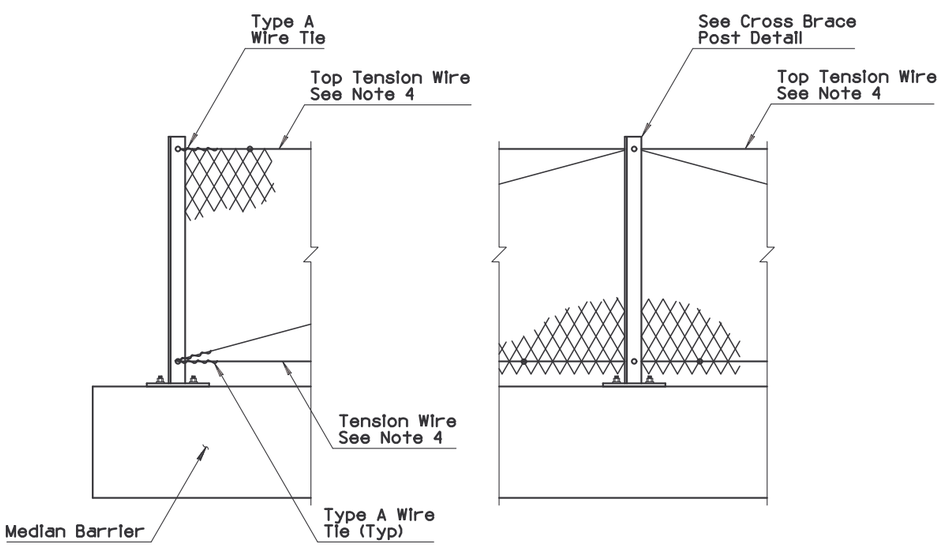

TERMINATION DETAIL

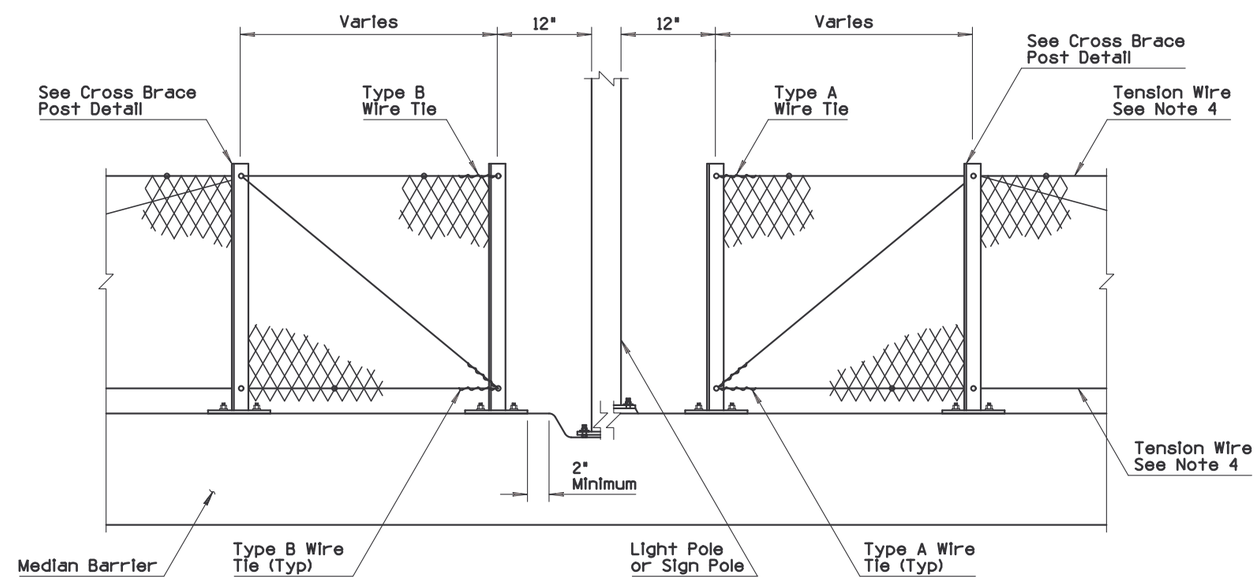

OBSTRUCTION DETAIL

APPROVED FOR DESIGN	STATE OF ARIZONA DEPARTMENT OF TRANSPORTATION ROADWAY STANDARD DRAWINGS	REV. 9/04
APPROVED FOR DISTRIBUTION	GLARE SCREEN CONCRETE MEDIAN BARRIER	DRAWING NO. C-10.97 Sheet 3 of 3

NO	DESCRIPTION OF REVISIONS	MADE BY	DATE
1	MODIFIED NOTE	PNB	7/94
2			
3			
4			

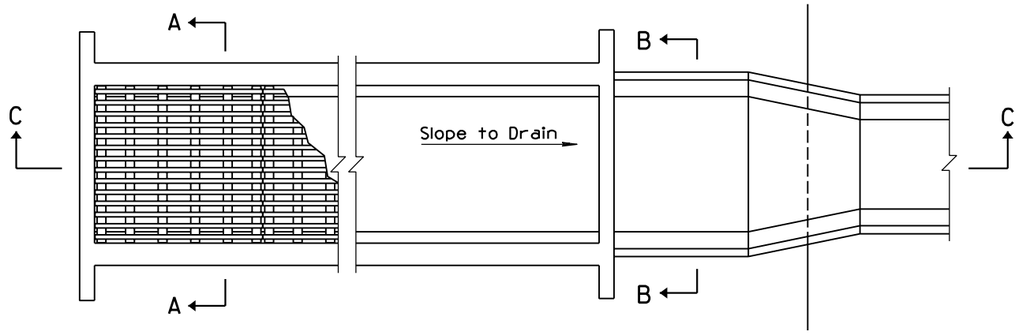

PLAN

GENERAL NOTES

1. See Std Dwg C-11.10 for all other Cattle Guard details.
2. This standard shall be used in embankment or where highly erodable soil is found.
3. All concrete shall be Class B.

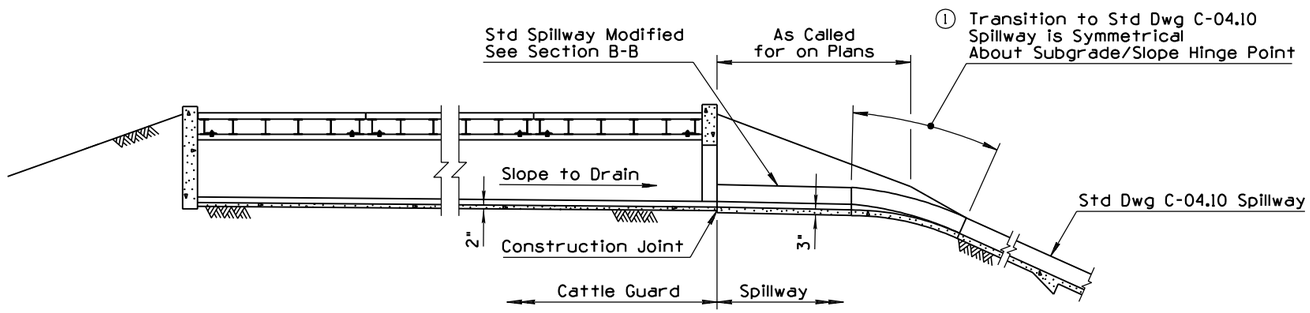

SECTION C-C
IN EMBANKMENT

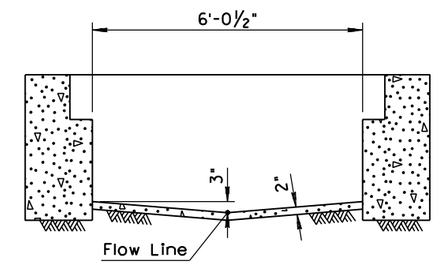

SECTION A-A

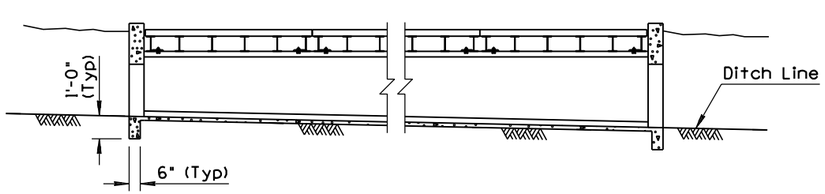

SECTION C-C
WHERE USED FOR THROUGH DRAINAGE-
CATTLE GUARD OPEN BOTH ENDS

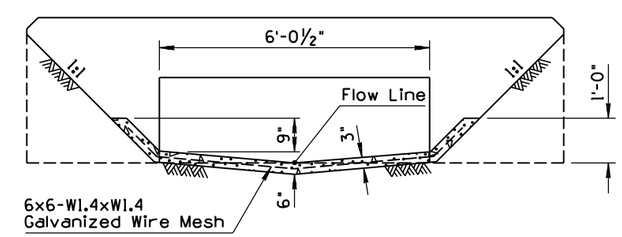

SECTION B-B

APPROVED FOR DESIGN	STATE OF ARIZONA DEPARTMENT OF TRANSPORTATION ROADWAY STANDARD DRAWINGS	REV.
Mary Viparina		7/94
APPROVED FOR DISTRIBUTION	CATTLE GUARD, DRAINAGE	DRAWING NO.
		C-11.20

NO	DESCRIPTION OF REVISIONS	MADE BY	DATE
1	ADDED ASTM CALLOUT	PNB	7/94
2			
3			
4			

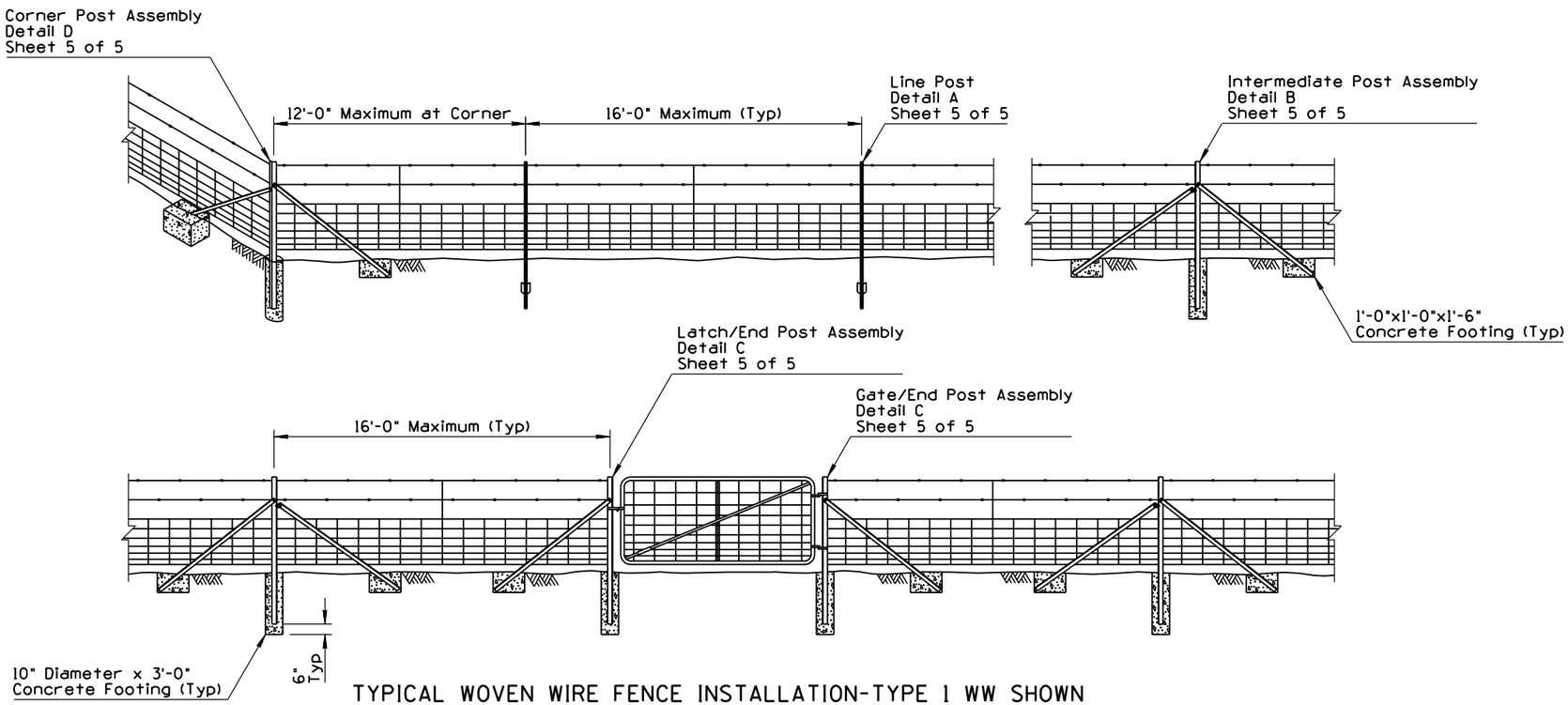

TYPICAL WOVEN WIRE FENCE INSTALLATION-TYPE 1 WW SHOWN

GENERAL NOTES

1. Length of post and braces shall not be less than 7'-0".
2. Woven wire fence fabric shall be attached to the post at the top, bottom, and intermediate wires.
3. Intermediate Post Assemblies shall be located as shown and at intervals to utilize standard rolls to minimize cutting and waste.
4. A twisted wire stay shall be centered between posts.

① ◑ ASTM design number

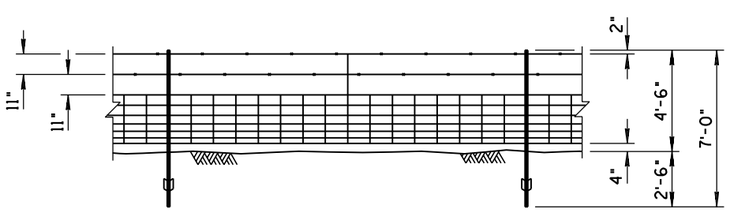

TYPE 1 WOVEN WIRE (WW)

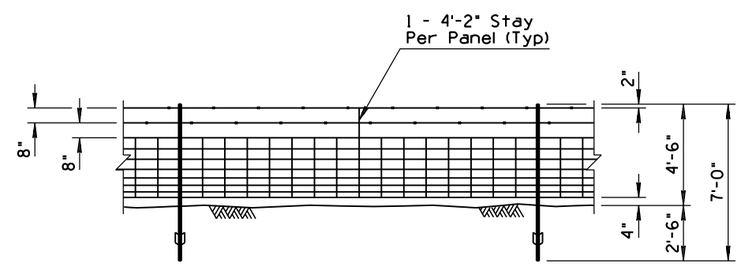

TYPE 2 WOVEN WIRE (WW)

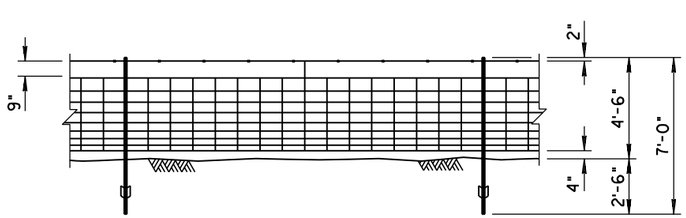

TYPE 3 WOVEN WIRE (WW)

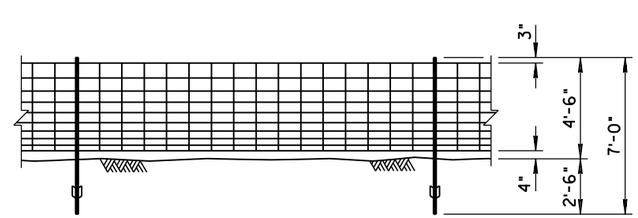

TYPE 4 WOVEN WIRE (WW)

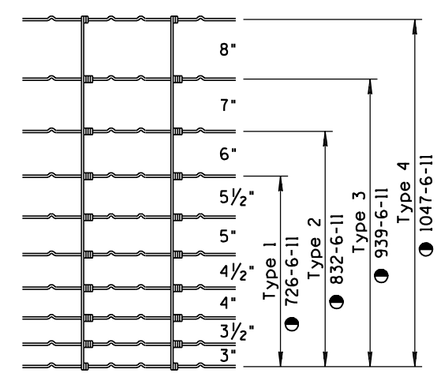

FENCE FABRIC DIMENSIONS AND DESIGN NUMBERS

APPROVED FOR DESIGN	STATE OF ARIZONA DEPARTMENT OF TRANSPORTATION ROADWAY STANDARD DRAWINGS	REV. 7/94
APPROVED FOR DISTRIBUTION	FENCE WOVEN WIRE	DRAWING NO. C-12.10 Sheet 1 of 5

NO	DESCRIPTION OF REVISIONS	MADE BY	DATE
1	REISSUE STD	PNB	7/94
2			
3			
4			

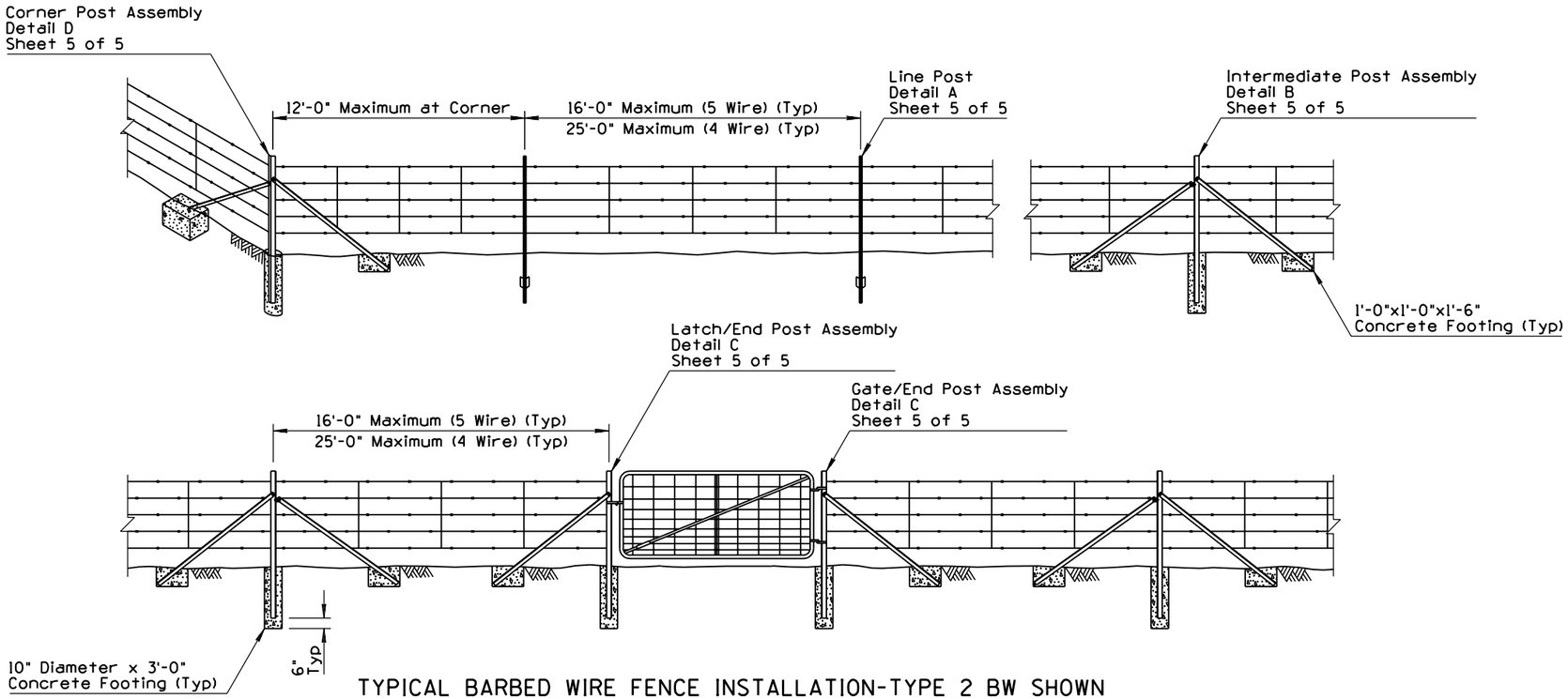

TYPICAL BARBED WIRE FENCE INSTALLATION-TYPE 2 BW SHOWN

GENERAL NOTES

1. Intermediate Post Assemblies shall be located as shown and at intervals not to exceed 500', or midway between all braced posts.
2. For game fence the bottom wire shall be barbless.
3. The stays on game fence shall have their ends turned up to prevent injuries to game.

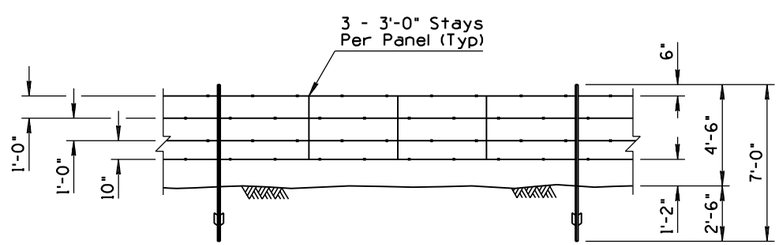

TYPE 1 BARBED WIRE (BW) (4 WIRE)

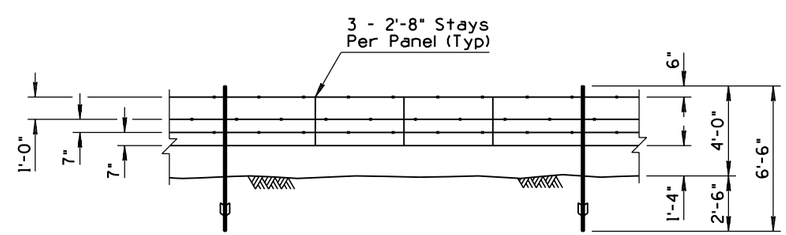

BARBED WIRE GAME FENCE (GF)

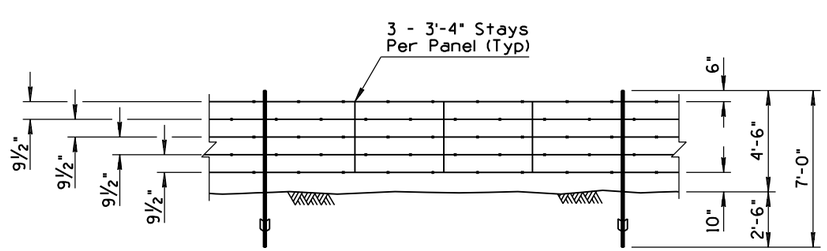

TYPE 2 BARBED WIRE (BW) (5 WIRE)

APPROVED FOR DESIGN	STATE OF ARIZONA DEPARTMENT OF TRANSPORTATION ROADWAY STANDARD DRAWINGS	REV.
Mary Vipaina		7/94
APPROVED FOR DISTRIBUTION	① FENCE BARBED WIRE	DRAWING NO.
		C-12.10 Sheet 2 of 5

NO	DESCRIPTION OF REVISIONS	MADE BY	DATE
1	REISSUE STD	PNB	7/94
2	ADDED DIMENSION	RLF	9/04
3			
4			

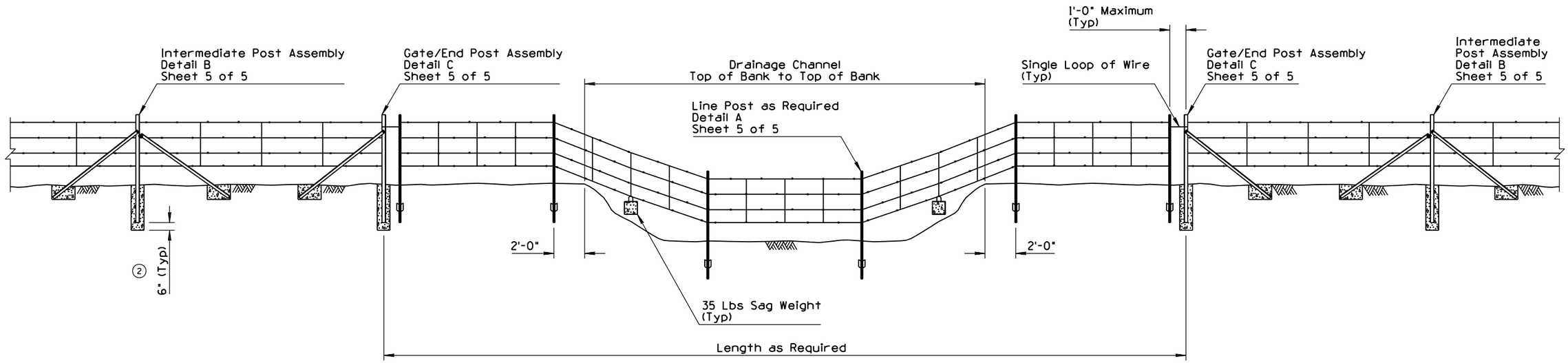

FLOOD GATE

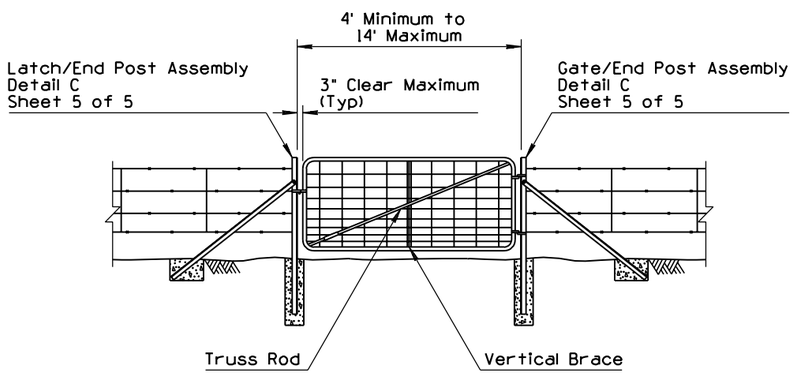

TYPE 1 SINGLE GATE

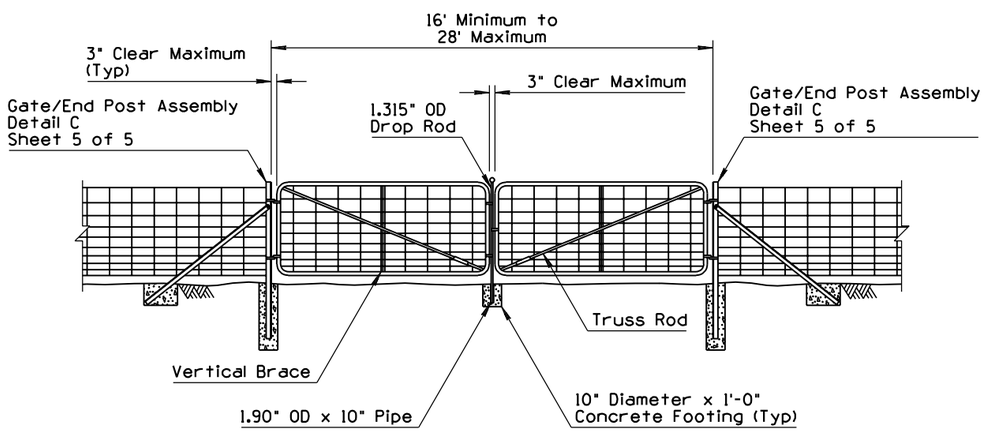

TYPE 1 DOUBLE GATE

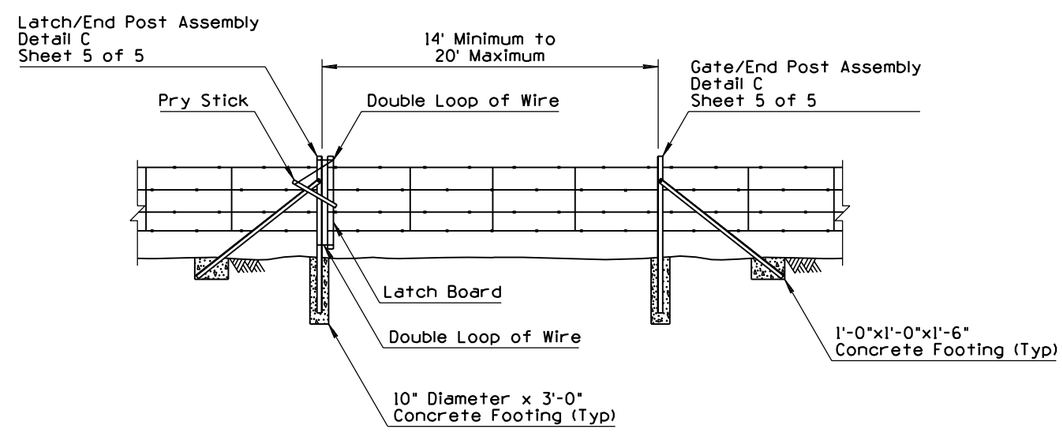

TYPE 2 GATE

APPROVED FOR DESIGN	STATE OF ARIZONA DEPARTMENT OF TRANSPORTATION ROADWAY STANDARD DRAWINGS	REV.
Mary Viparina		9/04
APPROVED FOR DISTRIBUTION	① FENCE TYPE 1 AND 2 GATES FLOOD GATE	DRAWING NO. C-12.10 Sheet 3 of 5

NO	DESCRIPTION OF REVISIONS	MADE BY	DATE
1	ADDED TYPE 2 GATE	RLF	9/04
2			
3			
4			

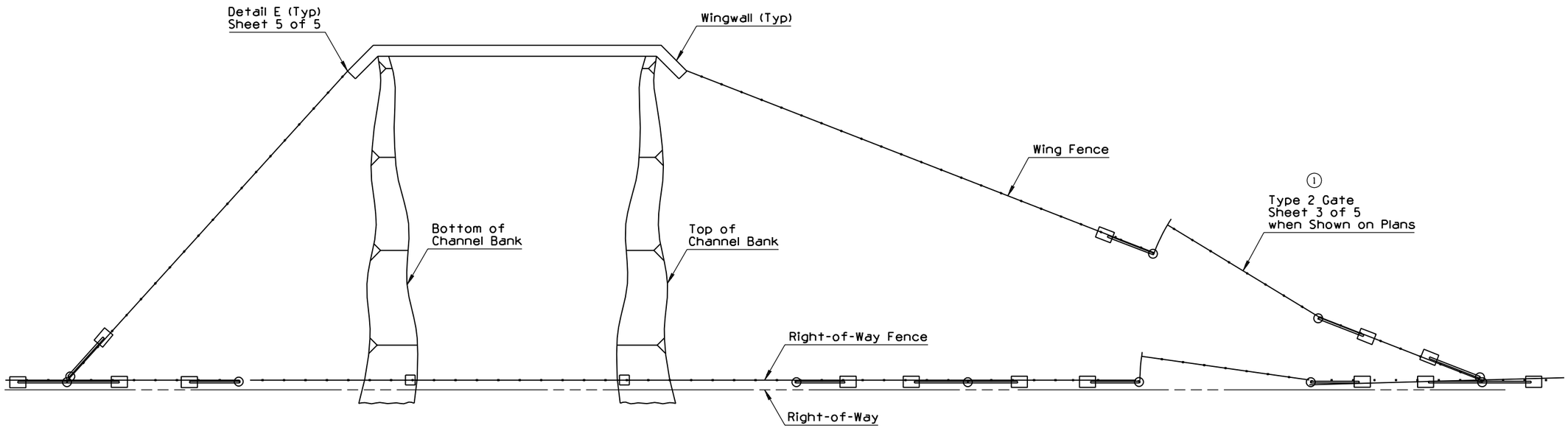

PLAN

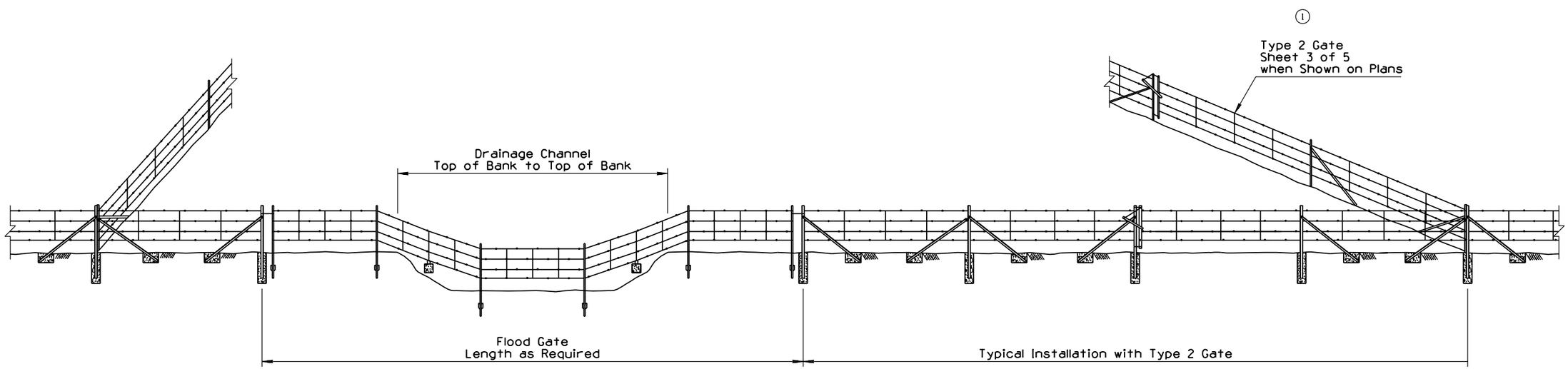

ELEVATION
TYPICAL FLOOD GATE INSTALLATION

APPROVED FOR DESIGN	STATE OF ARIZONA DEPARTMENT OF TRANSPORTATION ROADWAY STANDARD DRAWINGS	REV. 9/04
APPROVED FOR DISTRIBUTION	FENCE FLOOD GATE INSTALLATION	DRAWING NO. C-12.10 Sheet 4 of 5

NO	DESCRIPTION OF REVISIONS	MADE BY	DATE
1	REISSUE STD	PNB	7/94
2			
3			
4			

GENERAL NOTES

1. Post assembiles shall consist of an upright angle 2½"x2½"x¼" at 4.10 lbs/ft, and brace angles 2"x2"x¼" at 3.19 lbs/ft.

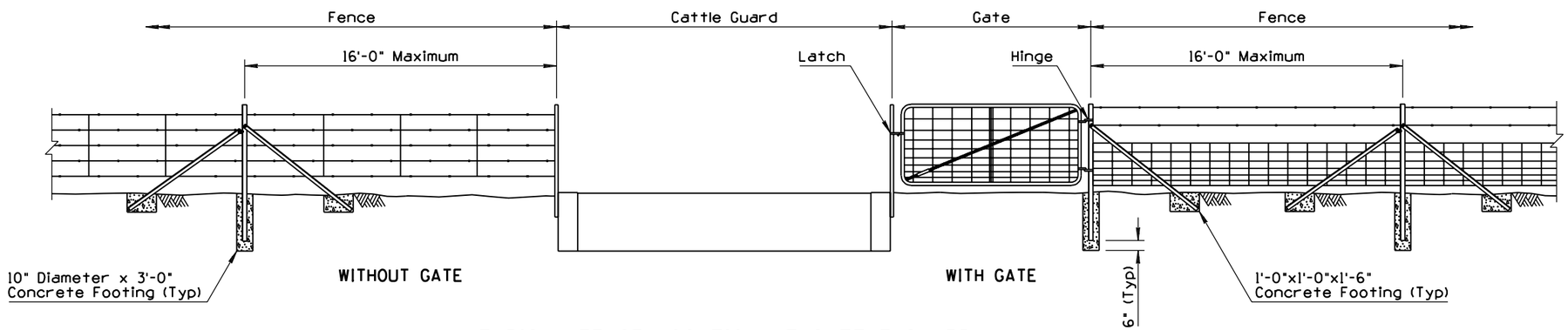

TYPICAL FENCE LOCATION AT CATTLE GUARD

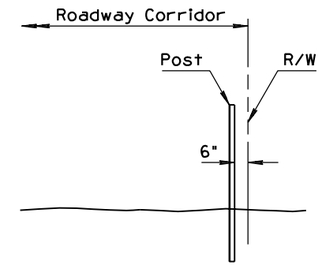

TYPICAL FENCE LOCATION

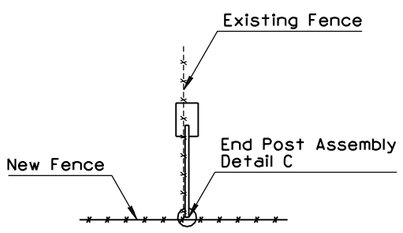

ABUTTING FENCE

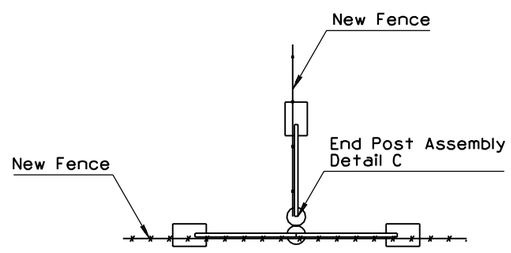

ABUTTING FENCE AT POST

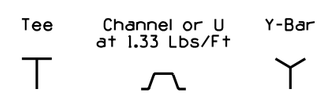

DETAIL A

TYPICAL CROSS SECTIONS
OF LINE POST SHAPES

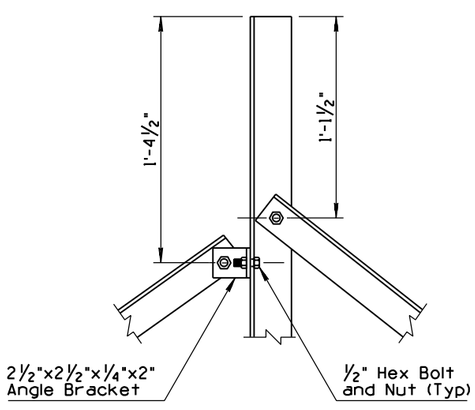

DETAIL B
INTERMEDIATE POST ASSEMBLY

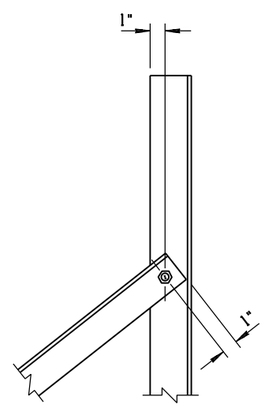

DETAIL C
END POST ASSEMBLY

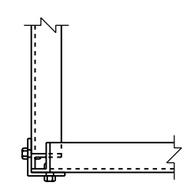

DETAIL D
CORNER POST ASSEMBLY

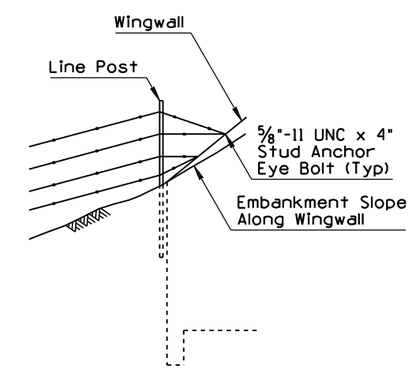

DETAIL E
FENCE CONNECTION TO WINGWALL

APPROVED FOR DESIGN	STATE OF ARIZONA DEPARTMENT OF TRANSPORTATION ROADWAY STANDARD DRAWINGS	REV.
Mary Vipanina		7/94
APPROVED FOR DISTRIBUTION	① FENCE MISCELLANEOUS DETAILS	DRAWING NO.
		C-12.10 Sheet 5 of 5

NO	DESCRIPTION OF REVISIONS	MADE BY	DATE
1	MODIFIED TABLE MEASUREMENT FORMAT	RLF	9/04
2			
3			
4			

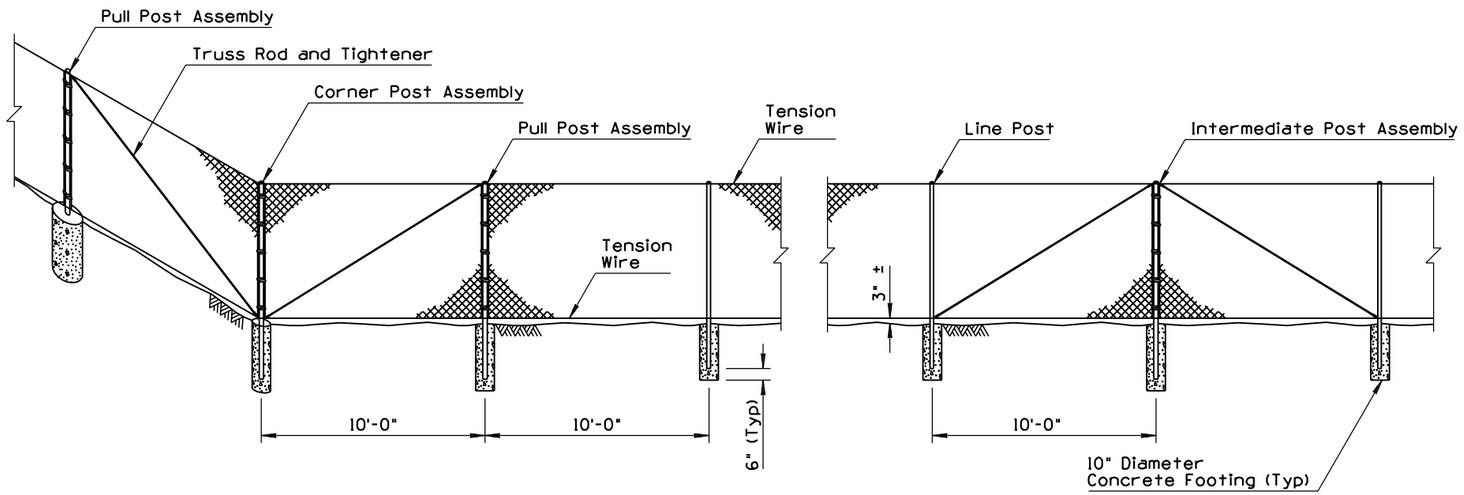

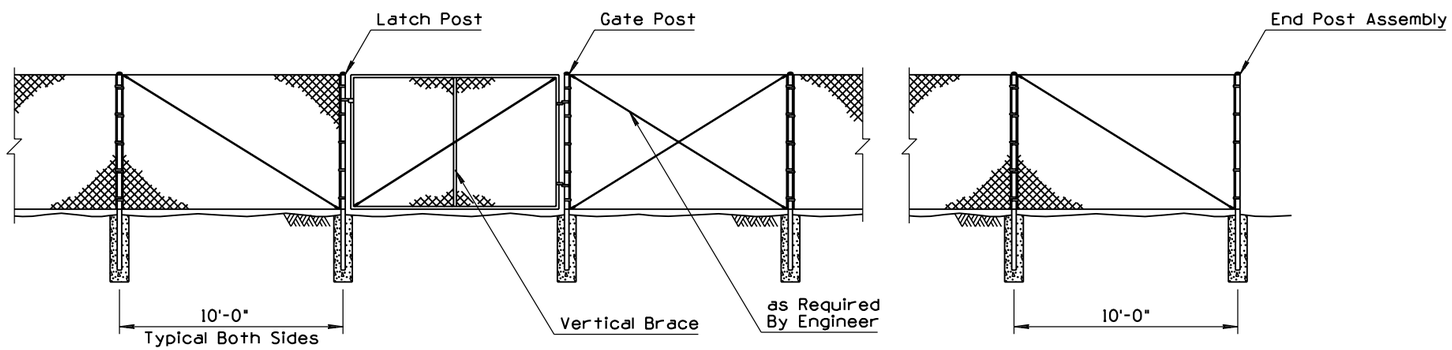

TYPICAL CHAIN LINK FENCE INSTALLATION - TYPE 1 SHOWN

1

TYPICAL POST DIMENSIONS								
Fabric Height (In)	Corner, End, Intermediate, Gate, Latch and Pull Posts				Line Posts			
	Length (Ft-In)	Round	Roll Formed (In)		Length (Ft-In)	Round		Roll Formed
		(OD) (In)	⌞	☐		(OD) (In)	H-Section (In)	☐ (In)
36	6-0	2.375	3.50 x 3.50	2.25 x 1.70	5-6	1.900	1.875 x 1.625	1.875 x 1.625
48	7-0	2.375	3.50 x 3.50	2.25 x 1.70	6-6	1.900	1.875 x 1.625	1.875 x 1.625
60	8-0	2.375	3.50 x 3.50	2.25 x 1.70	7-6	1.900	1.875 x 1.625	1.875 x 1.625
72	9-0	2.375	3.50 x 3.50	2.25 x 1.70	8-6	1.900	1.875 x 1.625	1.875 x 1.625
Over 72	Height +3-0	2.875	3.50 x 3.50	2.50 x 2.50	Height +2-6	2.375	2.250 x 2.000	1.875 x 1.625

GENERAL NOTES

1. Posts shall be round, H-section, or roll-formed and shall conform to the nominal dimensional requirements shown on the plans. Dimensional tolerances for all shapes shall be according to ASTM A500. In addition, the material of which posts are fabricated shall have a nominal thickness, before galvanizing, of not less than 0.111" for line posts and 0.130" for terminal posts.
2. Chain link fabric shall be either zinc-coated or aluminum-coated steel wire fence fabric. Zinc-coated steel fabric shall conform to the requirements of ASTM A392, Class 1 coating. Aluminum-coated steel fabric shall conform to the requirements of ASTM A491, with a minimum weight of coating of 0.40 ounce per square foot of wire surface area. Fabric shall be 11 gauge for all fence fabric 60" or less in height and shall be 9 gauge for fabrics greater than 60" in height.
3. Tension wires shall be 7 gauge (0.177" diameter) coil spring steel wire with a minimum tensile strength of 75,000 PSI and shall be zinc-coated or aluminum-coated.
4. Truss rods shall be 3/8" diameter adjustable rods. Truss tighteners shall have a strap thickness of not less than 1/4 ".
5. Stretcher bars shall be 3/16" by 3/4" steel flat bars. Stretcher bar bands shall be 1/8" by 1" preformed steel bands.
6. Bottom tension wire shall be 3" from top of crown on concrete footings.
7. Intermediate post assemblies shall be spaced at 500' intervals or midway between pull posts when the distance between such posts is less than 1,000' and more than 500'.
8. See Sheet 3 of 3 for typical fence location.

APPROVED FOR DESIGN	STATE OF ARIZONA DEPARTMENT OF TRANSPORTATION ROADWAY STANDARD DRAWINGS	REV. 9/04
APPROVED FOR DISTRIBUTION	FENCE CHAIN LINK TYPE 1	DRAWING NO. C-12.20 Sheet 1 of 3

NO	DESCRIPTION OF REVISIONS	MADE BY	DATE
1	MODIFIED TABLE MEASUREMENT FORMAT	RLF	9/04
2			
3			
4			

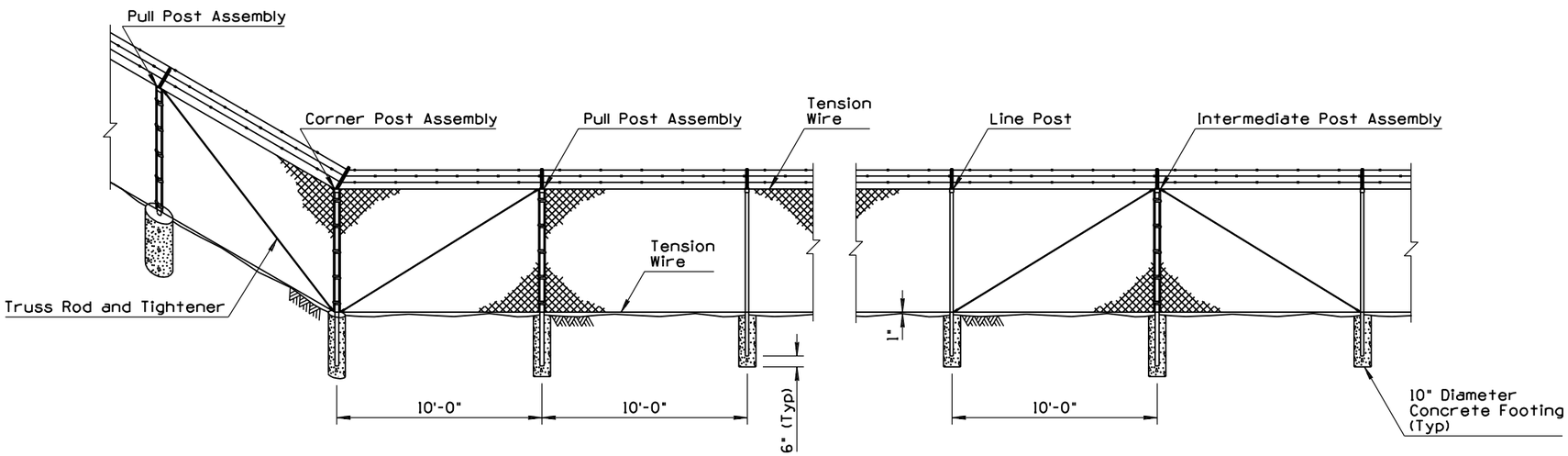

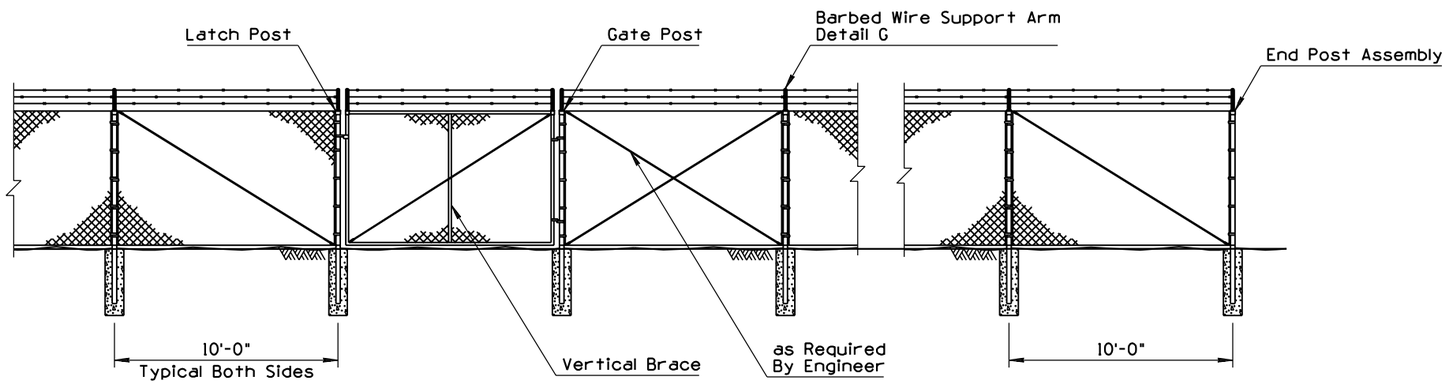

TYPICAL CHAIN LINK FENCE INSTALLATION - TYPE 2 SHOWN

GENERAL NOTES

1. Barbed wire for use with Type 2 chain link fence shall be 12 gauge steel wire with 4 point 14 gauge barbs spaced 5" apart and shall be either zinc-coated or aluminum-coated. Zinc-coated steel wire shall conform to the requirements of ASTM A121, Class 1 coating. Aluminum-coated steel wire shall conform to the requirements of ASTM 1585, Type 1, Class 1 coating.
2. Barbed wire support arm shall be of the type shown on the plans, shall be fabricated from commercial quality steel, and shall be zinc-coated in accordance with the requirements of AASHTO M111.
3. Bottom tension wire shall just clear top of crown on concrete footings.
4. For details and notes not shown - see chain link fence Type 1, Sheet 1 of 3.
5. See Sheet 3 of 3 for typical fence location.

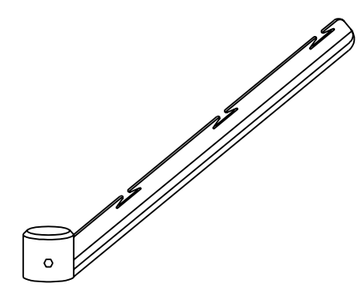

DETAIL G
BARBED WIRE SUPPORT ARM

(1)

TYPICAL POST DIMENSIONS								
Fabric Height (In)	Corner, End, Intermediate, Gate, Latch and Pull Posts				Line Posts			
	Length (Ft-In)	Round	Roll Formed		Length (Ft-In)	Round	H-Section (In)	Roll Formed
		(OD) (In)	⊔ (In)	□ (In)		(OD) (In)		□ (In)
72	8-6	2.375	3.50 x 3.50	2.50 x 2.50	8-0	1.900	1.875 x 1.625	1.875 x 1.625

APPROVED FOR DESIGN	STATE OF ARIZONA DEPARTMENT OF TRANSPORTATION ROADWAY STANDARD DRAWINGS	REV. 9/04
APPROVED FOR DISTRIBUTION	FENCE CHAIN LINK TYPE 2	DRAWING NO. C-12.20 Sheet 2 of 3

NO	DESCRIPTION OF REVISIONS	MADE BY	DATE
1	MODIFIED TABLE MEASUREMENT FORMAT	RLF	9/04
2			
3			
4			

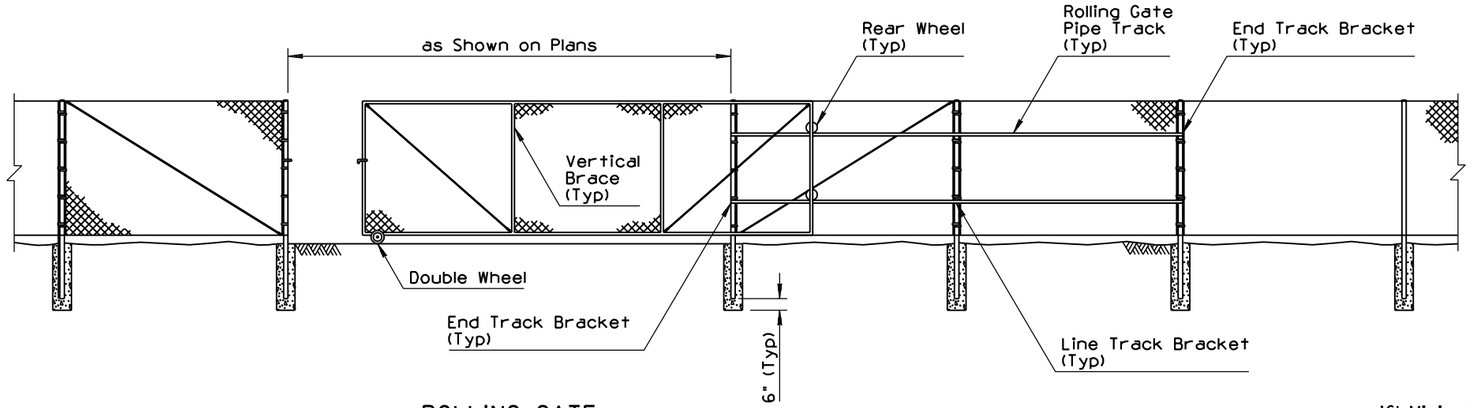

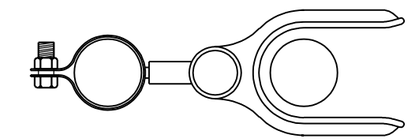

SECTION A-A
DOUBLE GATE LATCH ASSEMBLY

ROLLING GATE

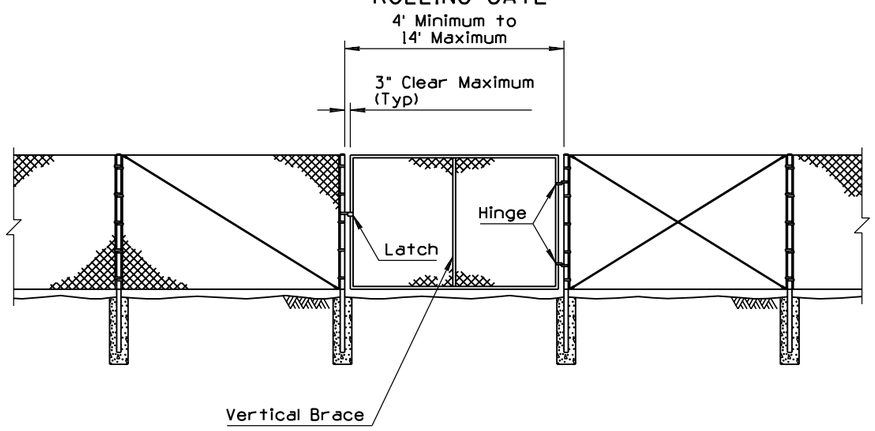

SINGLE GATE

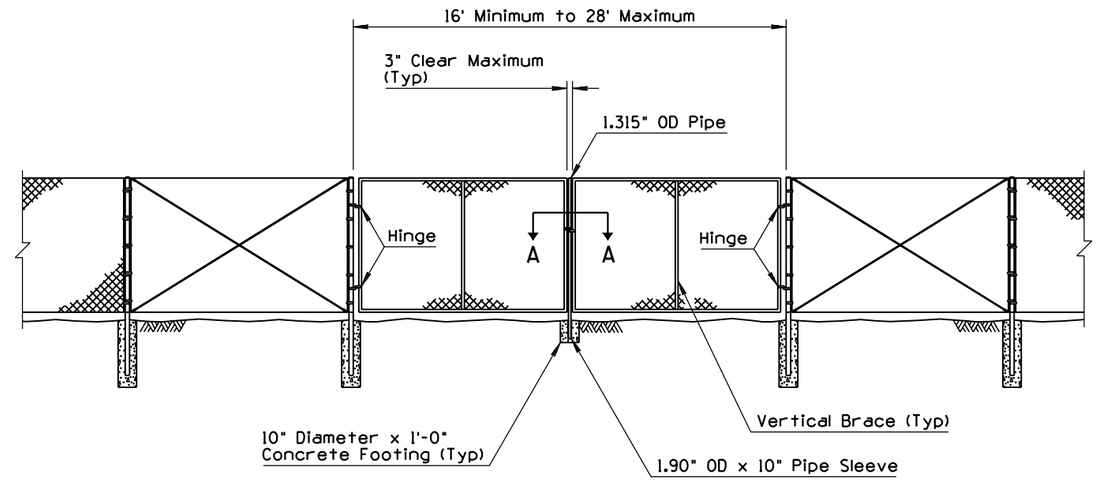

DOUBLE GATE

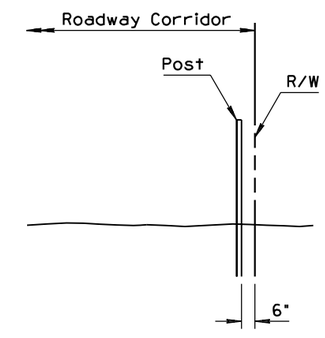

TYPICAL FENCE LOCATION

1

TYPICAL GATE DIMENSIONS									
SINGLE AND DOUBLE SWING GATES						ROLLING GATES			
Gate Width (Ft)	Vertical Braces	Gate Post Size	Gate Width (Ft)	Vertical Braces	Gate Post Size	Gate Width (Ft)	Number of Equally Spaced Vertical Braces	Tension Rods Per Braced Panel	Gate Post Size
6' Ht or Less		OD (In)	Over 6' Ht		OD (In)				OD (In)
3 to 8	0	2.875	3 to 8	0	2.875	6 to 13	1	0	2.875
8 to 16	1	4.000	8 to 16	1	4.000	13 to 16	1	1	2.875
16 to 18	2	4.000				16 to 21	2	1	2.875
						21 to 27	2	1	2.875
						28 and Larger	3	1	2.875

GATES FOR CHAIN LINK FENCE - TYPE 1 SHOWN
(Type 2, With Barbed Wire Typical)

APPROVED FOR DESIGN	STATE OF ARIZONA DEPARTMENT OF TRANSPORTATION ROADWAY STANDARD DRAWINGS	REV.
Mary Vipauna		9/04
APPROVED FOR DISTRIBUTION	FENCE CHAIN LINK GATES	DRAWING NO.
		C-12.20 Sheet 3 of 3

NO	DESCRIPTION OF REVISIONS	MADE BY	DATE
1	REVISED TITLE	RLF	9/04
2	REVISED SLOPE CRITERIA	RLF	9/04
3			
4			

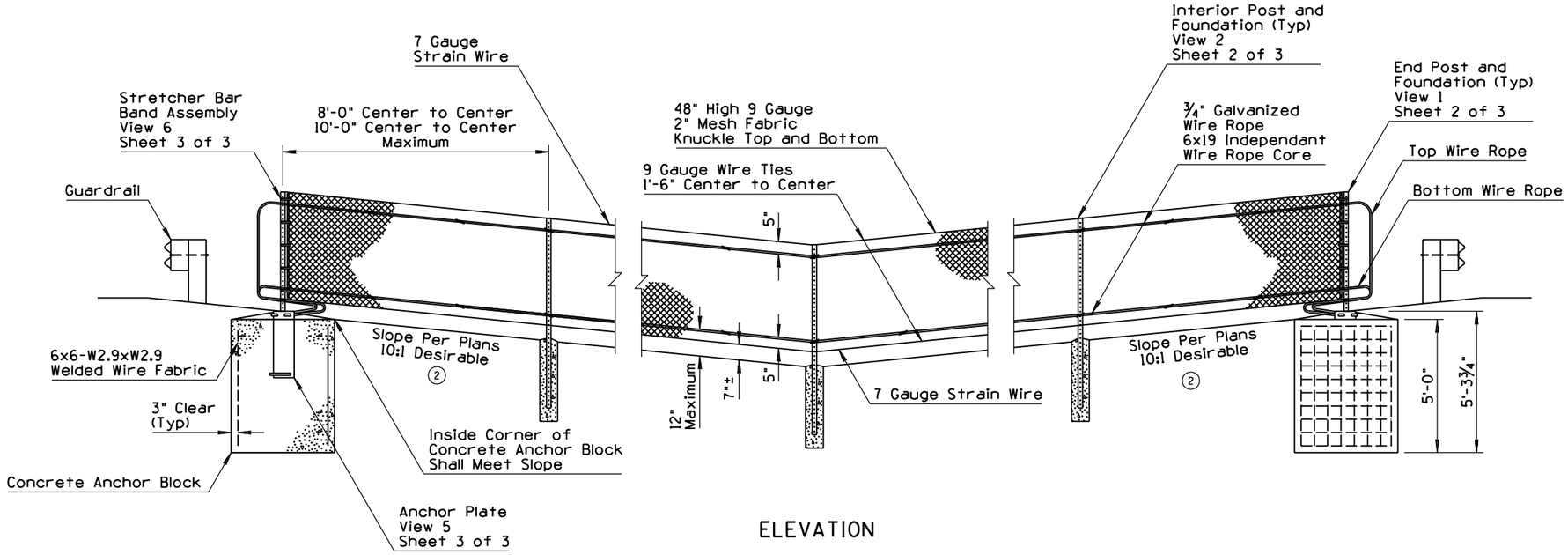

ELEVATION

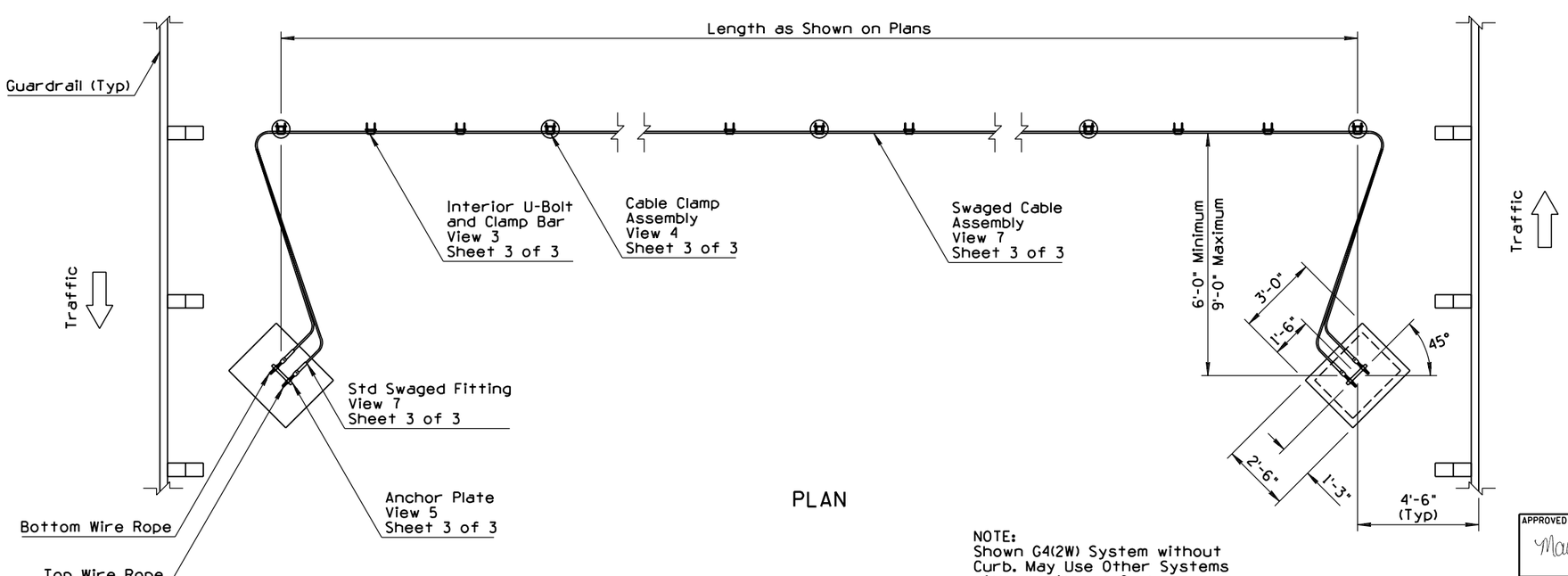

PLAN

NOTE:
Shown G4(2W) System without Curb. May Use Other Systems with or without Curb.

GENERAL NOTES

1. All concrete shall be Class S, f'c=4000 PSI.
2. All bolts, nuts, washers and fittings shall meet the dimensional requirements of the American National Standards Institute, unless otherwise designated and shall be galvanized in accordance with ASTM A153.
3. Galvanized swaged fitting and U-Bolt shall conform to ASTM A449.
4. The ¾" galvanized wire rope shall conform to AASHTO M30 Class B, Type 2.
5. The wire fabric, ties, bands, stretcher bars, and other fittings and hardware shall conform to AASHTO M181.
6. The wire fabric fence shall follow contour of the graded median.
7. The excavation for the concrete anchor blocks shall be to neat lines. Maximum excess shall be 3".
8. Perforated posts shall be square tube formed from 0.105" USS gauge ASTM A366/A366M cold rolled carbon steel. The square tubes shall be welded directly in the corner by high frequency resistance welding or equal. The posts to be externally scarfed to agree with standard corner radii of 5/32" ± 1/16".
9. Perforated posts shall be galvanized to the requirements of ASTM A653/A653M. Coating designator shall be Z275.
10. The cables shall have enough tension to prevent sagging. The location of the concrete anchor blocks may also be varied to provide enough tension to help prevent sagging.
11. Two interior U-bolt and clamp bars shall be spaced at 1/3 of the distance between posts.
12. See Standard Drawing C-12.20 for 48" fabric details.
13. An alternate to rectangular concrete anchor block shall be a 36" diameter round footing with an additional depth of 4".
14. The median approach grade within 100'± of the Chain Link Cable Barrier should not exceed a grade break of 10 percent.

APPROVED FOR DESIGN	STATE OF ARIZONA DEPARTMENT OF TRANSPORTATION ROADWAY STANDARD DRAWINGS	REV.
		9/04
APPROVED FOR DISTRIBUTION	FENCE CHAIN LINK CABLE BARRIER (1)	DRAWING NO. C-12.30 Sheet 1 of 3

NO	DESCRIPTION OF REVISIONS	MADE BY	DATE
1	ADDED DESIGNATION	RLF	9/04
2	REVISED TITLE	RLF	9/04
3			
4			

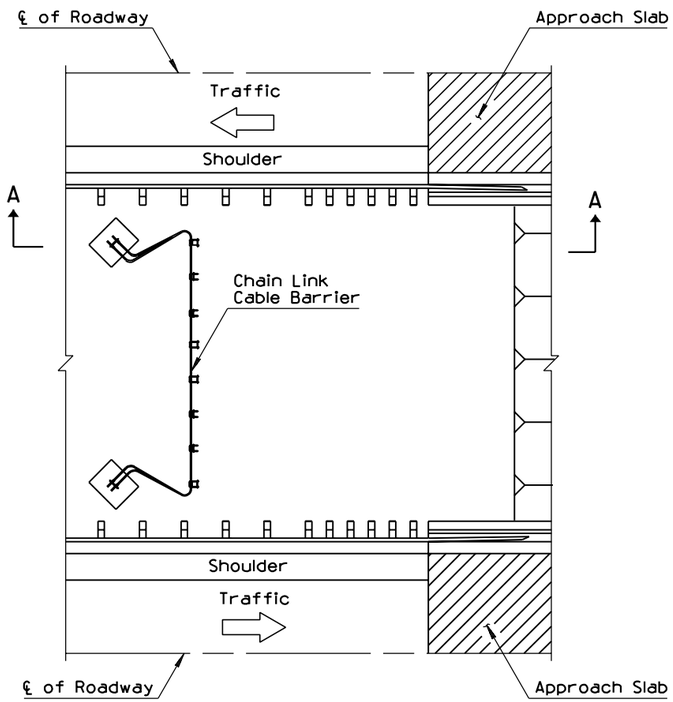

PLAN

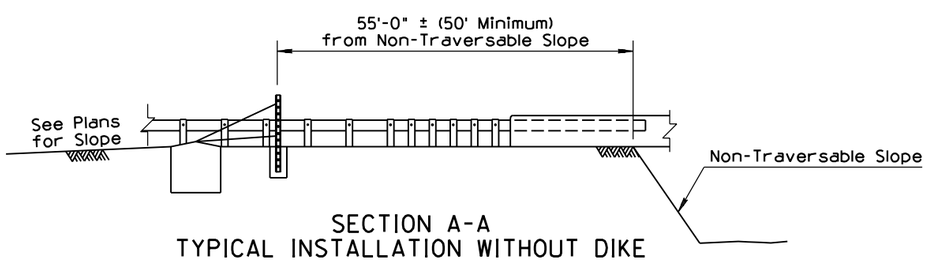

SECTION A-A
TYPICAL INSTALLATION WITHOUT DIKE

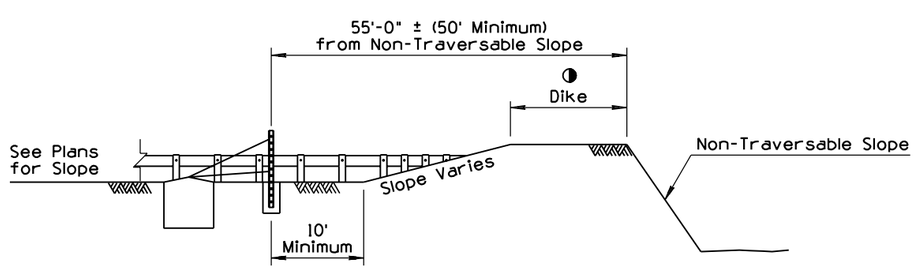

SECTION A-A
TYPICAL INSTALLATION WITH DIKE

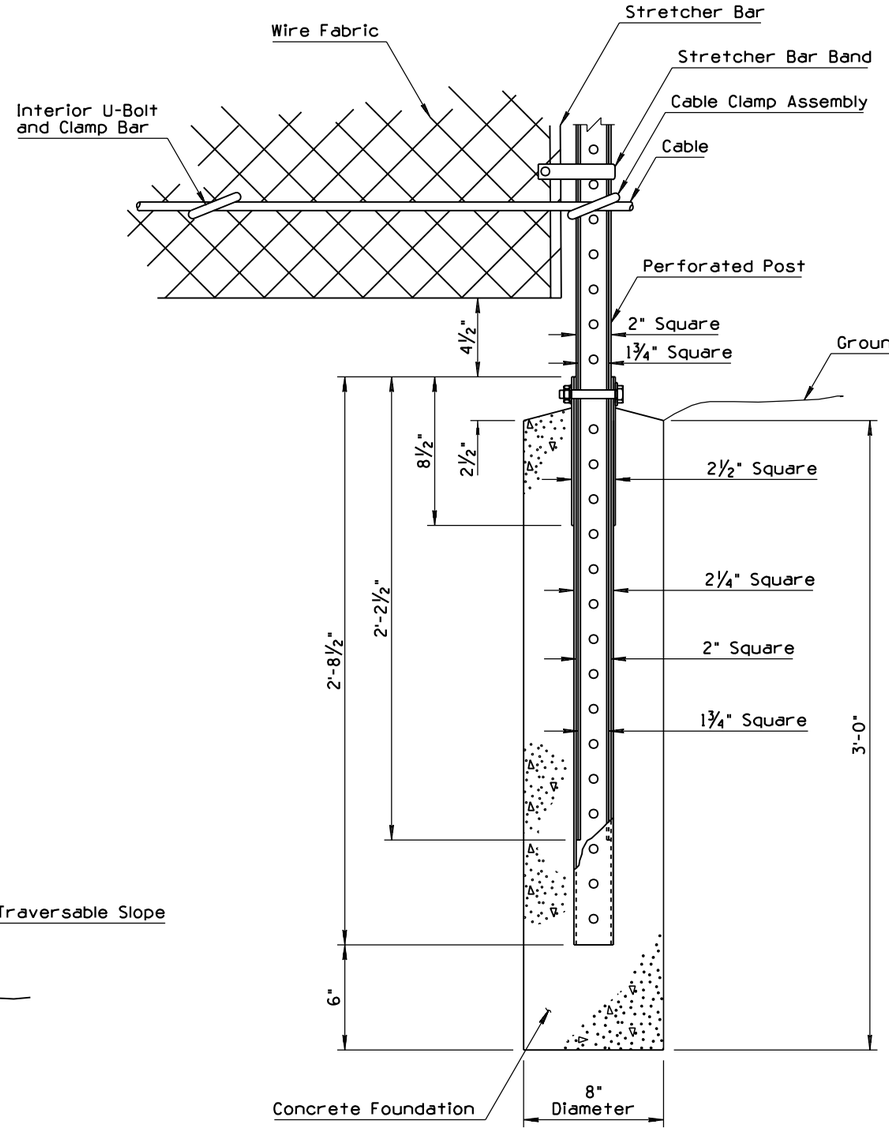

VIEW 1
END POST AND FOUNDATION

① ● - Indicates AASHTO, AGC & ARTBA Task Force 13 Report designation

◑ When Shown on Plans

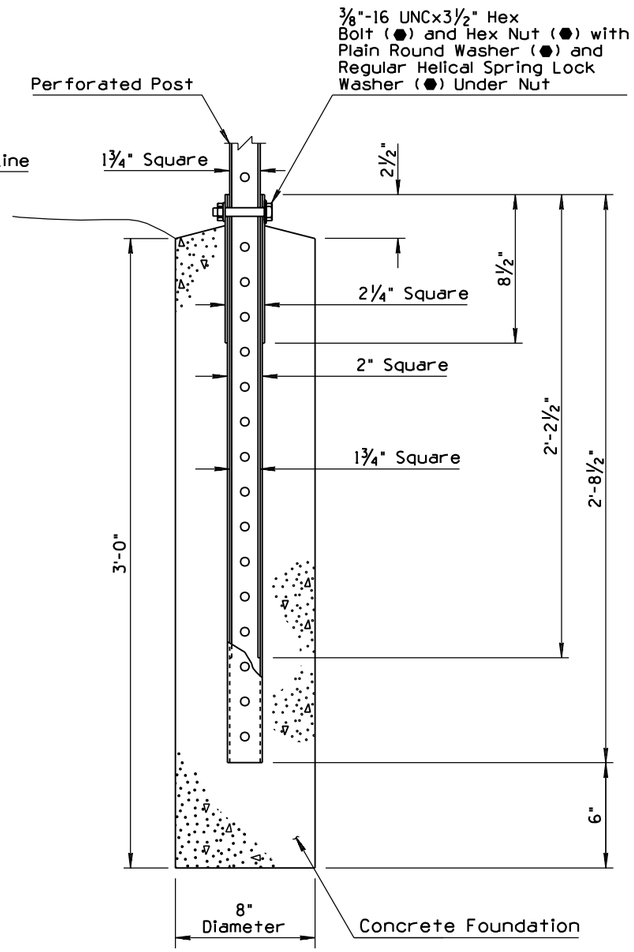

VIEW 2
INTERIOR POST AND FOUNDATION

APPROVED FOR DESIGN	STATE OF ARIZONA DEPARTMENT OF TRANSPORTATION ROADWAY STANDARD DRAWINGS	REV.
Mary Viparina		9/04
APPROVED FOR DISTRIBUTION	② FENCE CHAIN LINK CABLE BARRIER	DRAWING NO. C-12.30 Sheet 2 of 3

NO	DESCRIPTION OF REVISIONS	MADE BY	DATE
1	ADDED DESIGNATION	RLF	9/04
2	REVISED TITLE	RLF	9/04
3			
4			

(1) ● - Indicates AASHTO, AGC & ARTBA Task Force 13 Report designation

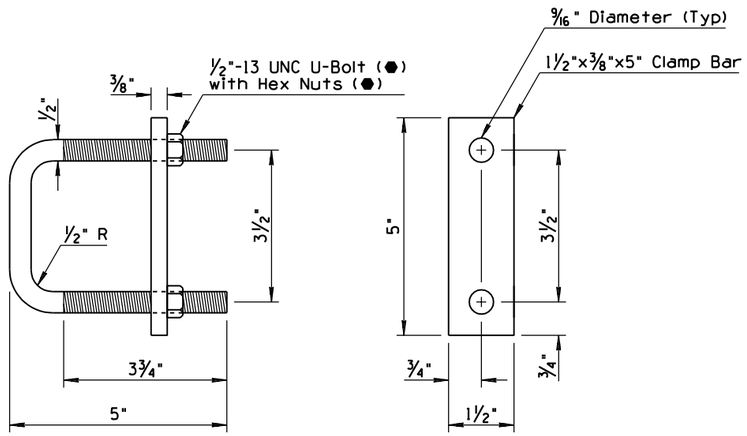

VIEW 3
U-BOLT AND CLAMP BAR

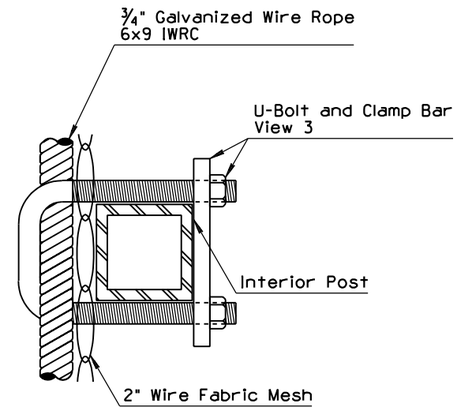

VIEW 4
CABLE CLAMP ASSEMBLY

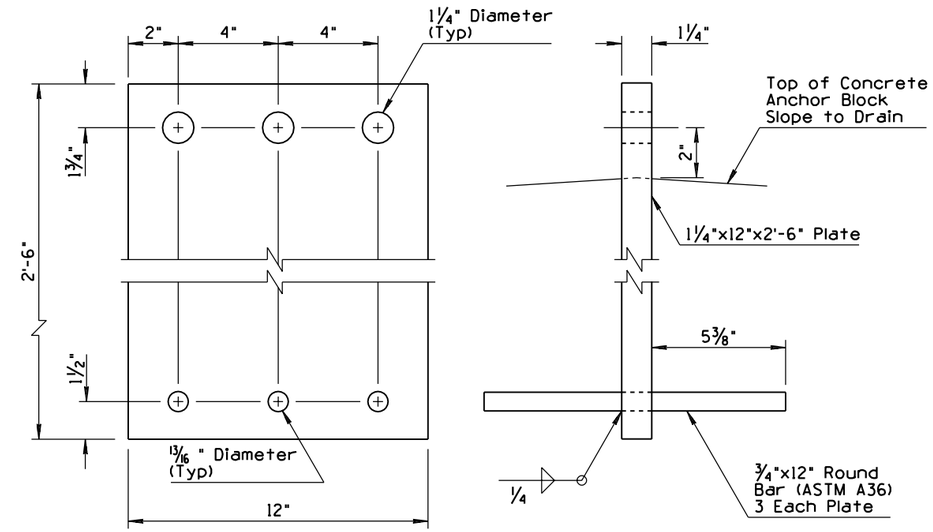

VIEW 5
ANCHOR PLATE

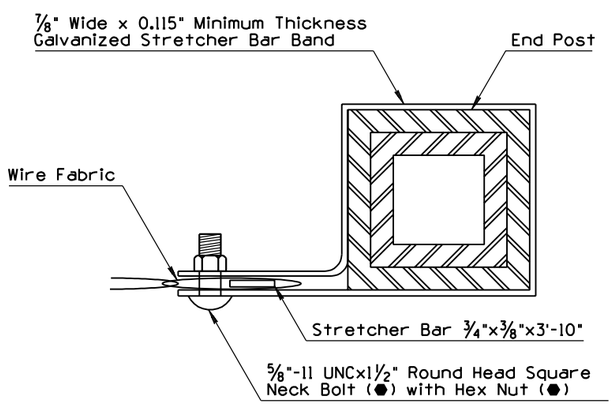

VIEW 6
STRETCHER BAR BAND ASSEMBLY

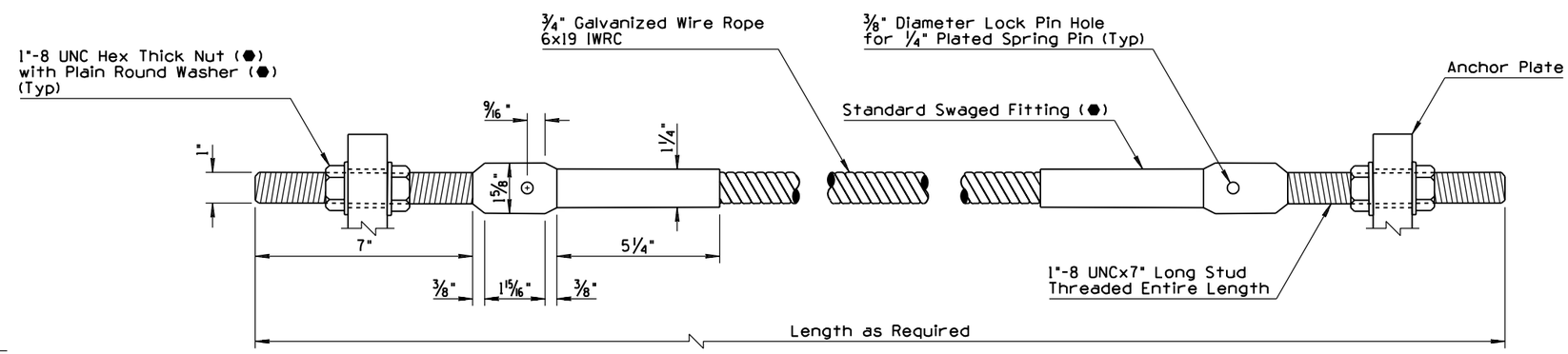

VIEW 7
SWAGED CABLE ASSEMBLY

APPROVED FOR DESIGN	STATE OF ARIZONA DEPARTMENT OF TRANSPORTATION ROADWAY STANDARD DRAWINGS	REV. 9/04
APPROVED FOR DISTRIBUTION	FENCE (2) CHAIN LINK CABLE BARRIER	DRAWING NO. C-12.30 Sheet 3 of 3

NO	DESCRIPTION OF REVISIONS	MADE BY	DATE
1	REVISED TABLE MEASUREMENT FORMAT	RLF	9/04
2	REARRANGED STANDARD GRAPHICS	RLF	9/04
3			
4			

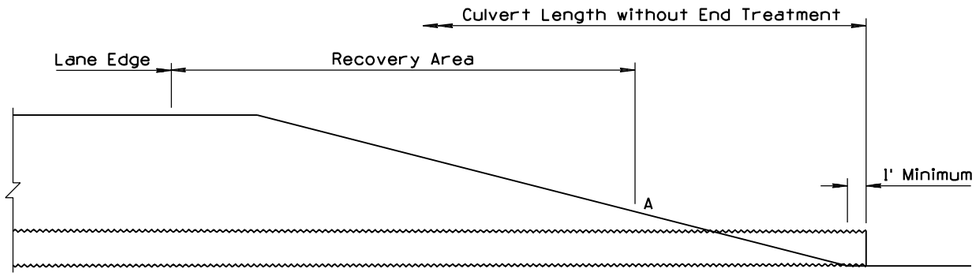

CULVERT INSTALLATION WITHOUT END TREATMENT

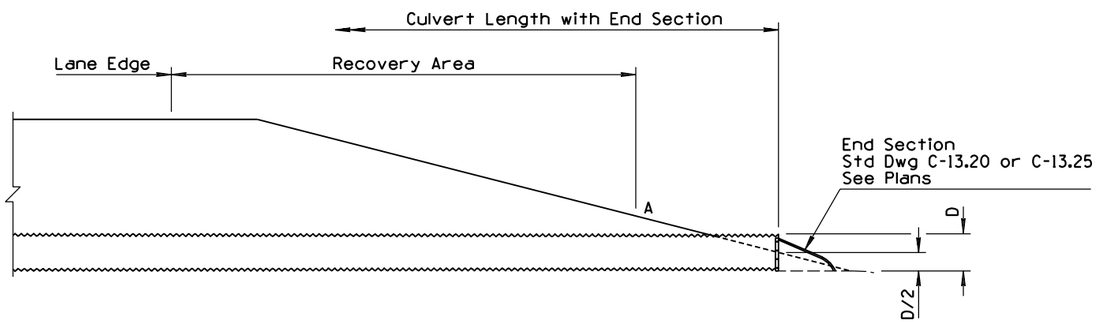

CULVERT INSTALLATION WITH END SECTION

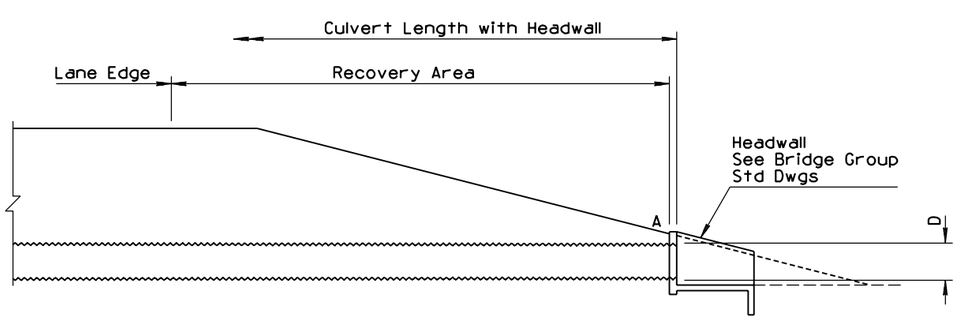

CULVERT INSTALLATION WITH HEADWALL

①

MINIMUM SPACING FOR MULTIPLE INSTALLATIONS WITHOUT END SECTIONS		
Diameter or Span (In)	Installation Type	
	Projecting (W) (In)	Headwall (E) (Ft-In)
18	12	2-6
24	12	3-0
30	15	3-9
36	18	4-6
42	21	5-3
48 to 66	(D or S)/2	OD + 3-0
72 and Over	36	OD + 3-0

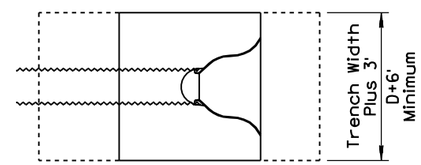

PLAN

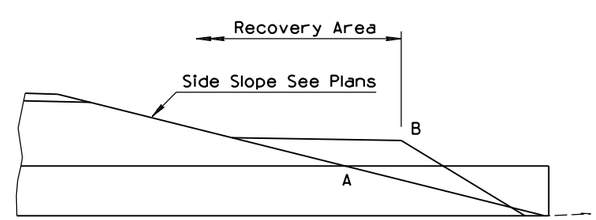

PIPE WITH BERM REQUIREMENT DETAIL

See General Note 4

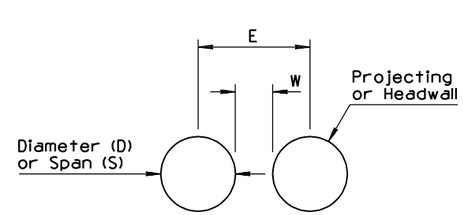

GENERAL NOTES

1. See plans for any required inlet and/or outlet protection.
2. Dimensions W and E apply to both non-trench and trench conditions.
3. Minimum cover over pipe culverts shall be 12", measured from the top of pipe.
4. See Pipe Berm Requirement Detail for pipe berm requirements and Std Dwg C-03.10 for installation. If Point A is within the recovery area, then a pipe berm is required and Point B is set at the edge of the recovery area.
5. Plating of slopes at pipe locations similar for pipes without end sections and for multiple pipe installations.

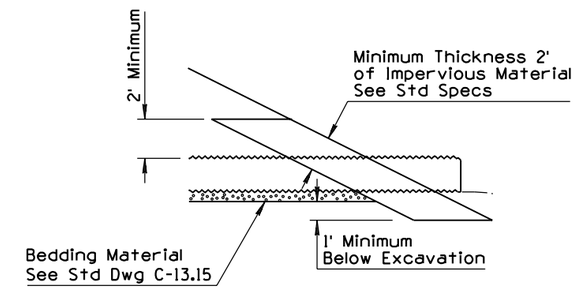

ELEVATION WITHOUT END SECTION

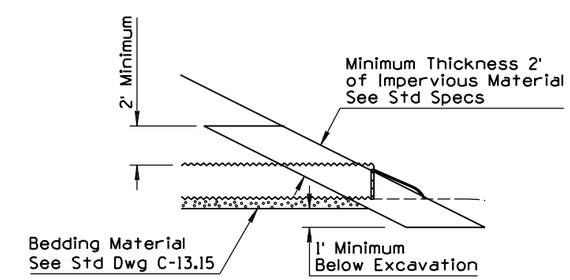

ELEVATION WITH END SECTION
PLATING SLOPES AT PIPE LOCATIONS

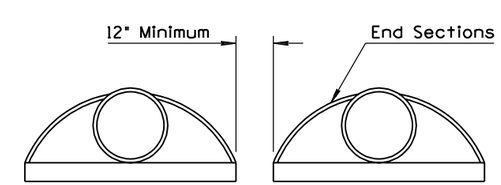

MULTIPLE INSTALLATIONS WITH END SECTIONS

APPROVED FOR DESIGN	STATE OF ARIZONA DEPARTMENT OF TRANSPORTATION ROADWAY STANDARD DRAWINGS	REV.
		9/04
APPROVED FOR DISTRIBUTION	PIPE CULVERT INSTALLATION ②	DRAWING NO. C-13.10 Sheet 1 of 2

NO	DESCRIPTION OF REVISIONS	MADE BY	DATE
1	NEW GENERAL NOTE 2	RLF	9/04
2			
3			
4			

GENERAL NOTES

1. Minimum cover over pipe culverts shall be 12", measured from the top of pipe.
2. (1) After welding, the damaged coating shall be cleaned by a wire brush and painted with at least one full coat of Paint Number 4, or given two coats of an approved hot asphalt paint, as directed by the Engineer.

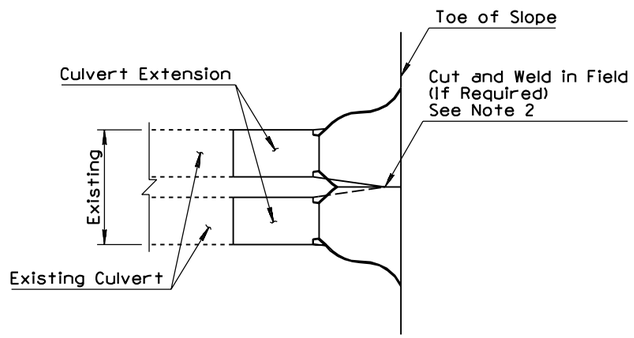

SPECIAL MULTIPLE PIPE END SECTION DETAIL
FOR PIPE CULVERT EXTENSIONS ONLY

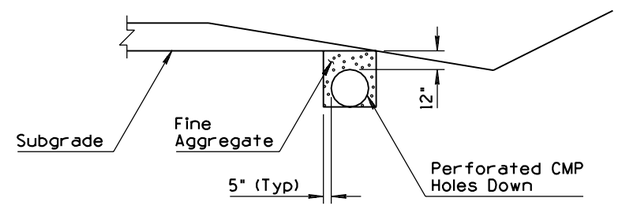

PERFORATED CMP INSTALLATION

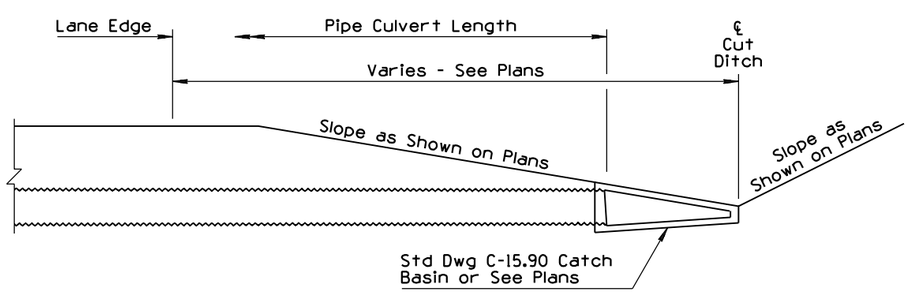

PIPE AND CATCH BASIN INSTALLATION
AT SAG CONDITION OF CUT DITCH

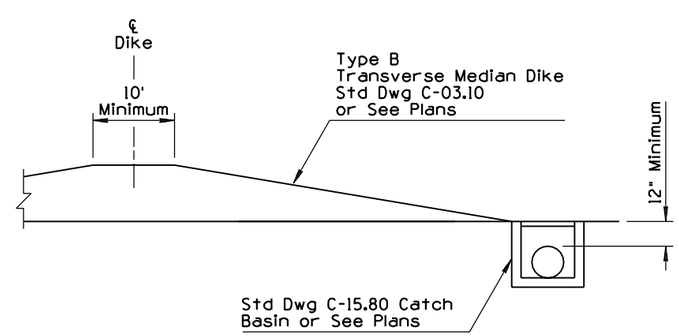

PIPE AND CATCH BASIN INSTALLATION
AT BASE OF TRANSVERSE DIKE

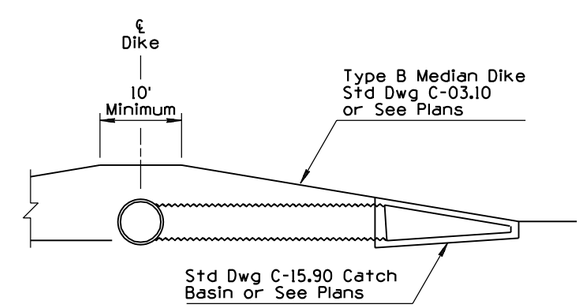

PIPE AND CATCH BASIN INSTALLATION
AT FACE OF TRANSVERSE DIKE

APPROVED FOR DESIGN	STATE OF ARIZONA DEPARTMENT OF TRANSPORTATION ROADWAY STANDARD DRAWINGS	REV.
		9/04
APPROVED FOR DISTRIBUTION	PIPE CULVERT INSTALLATION	DRAWING NO.
		C-13.10 Sheet 2 of 2

NO	DESCRIPTION OF REVISIONS	MADE BY	DATE
1	REVISED SPECIFICATIONS	RLF	9/04
2			
3			
4			

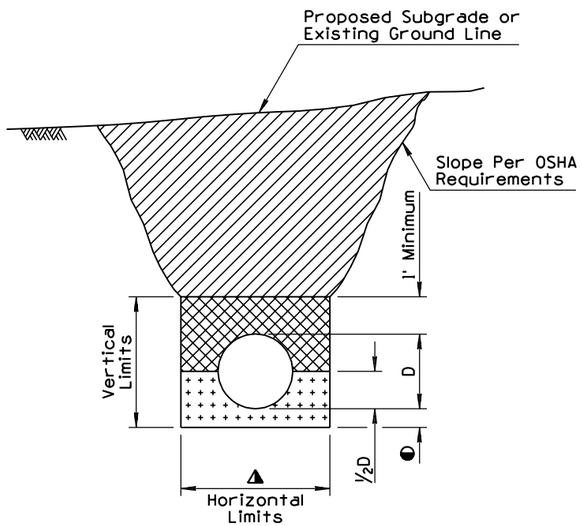

TRENCH CONDITION
IN NATURAL GROUND OR IN EMBANKMENT
WITHOUT BRACING

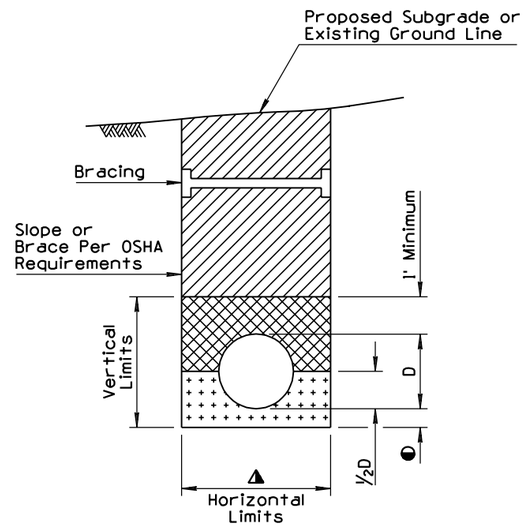

TRENCH CONDITION
IN NATURAL GROUND OR IN EMBANKMENT
WITH BRACING SHOWN

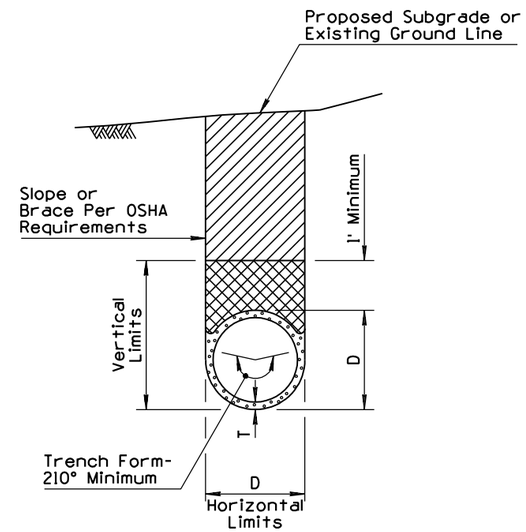

TRENCH CONDITION
NRCIPCP IN NATURAL GROUND
OR IN EMBANKMENT

GENERAL NOTES

1. Pipes shall be installed either in a trench condition or in a non-trench condition in natural ground or in embankment.
2. In a trench condition, the vertical and horizontal limits shall be maintained. If horizontal limits are exceeded or the vertical limits are not maintained, a non-trench condition exists.
3. Bracing and sloping shall conform to OSHA requirements.
4. Pipe backfill may be bedding material.
5. In a non-trench condition, the embankment for pipe stability shall be constructed in lifts to the limits shown in the detail simultaneously with the bedding material and pipe backfill. If the contractor chooses to construct it as a trench condition, the embankment shall be constructed before excavating the trench.

D - Outside diameter of full circle pipe or outside dimension (span or rise) of arch, arch pipe, elliptical pipe.

T - Minimum wall thickness for NRCIPCP: See Plans.

(1) ▲ For D < than 4': D + 6" each side, minimum
D + 2' each side, maximum

(1) For D ≥ than 4': D + 1' each side, minimum
D + 3' each side, maximum

◐ - 6 inches except when on unyielding or unstable material. See Std Specs.

TRENCH BACKFILL

PIPE BACKFILL

BEDDING

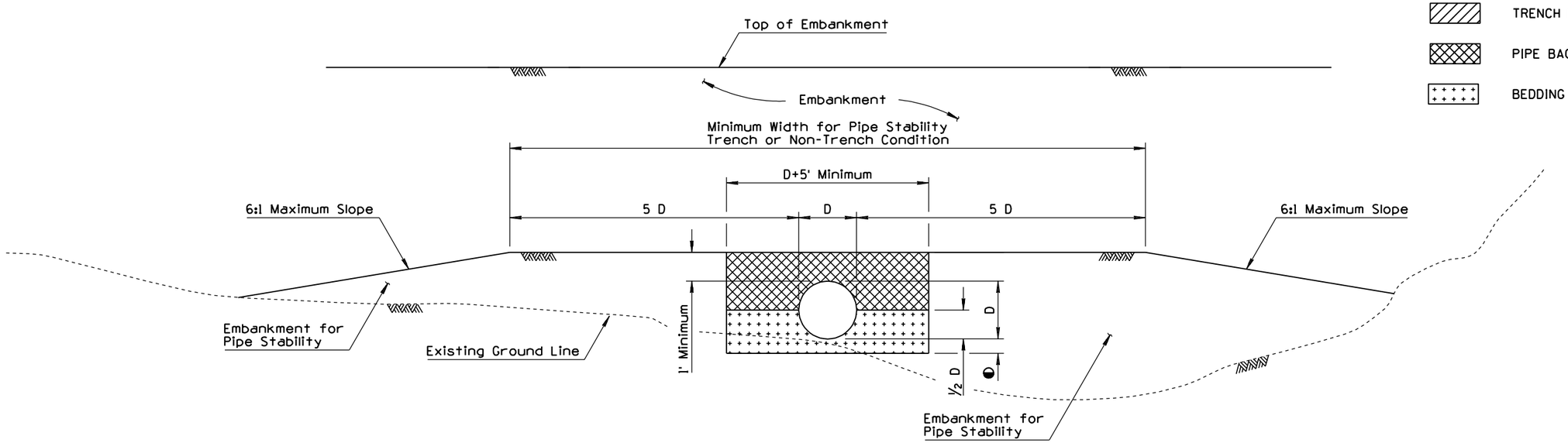

NON-TRENCH CONDITION

APPROVED FOR DESIGN	STATE OF ARIZONA DEPARTMENT OF TRANSPORTATION ROADWAY STANDARD DRAWINGS	REV.
		9/04
APPROVED FOR DISTRIBUTION	TYPICAL PIPE INSTALLATION	DRAWING NO.
		C-13.15

NO	DESCRIPTION OF REVISIONS	MADE BY	DATE
1	NEW GENERAL NOTE 1	RLF	9/04
2			
3			
4			

GENERAL NOTES

(1)

1. End section joint type shall match the pipe joint type.
2. Embankment slope shall be warped to match slope of end section.

Pipe Diameter (In)	Approximate Weight (Lbs)	Dimensions (In)						Approximate Slope
		T	A	B	C	E	F	
24	1520	3	9½	43½	30	73½	48	3
27	1930	3¼	10½	49½	24	73½	54	3
30	2190	3½	12	54	19¾	73¾	60	3
36	4100	4	15	63	34¾	97¾	72	3
42	5380	4½	21	63	35	98	78	3

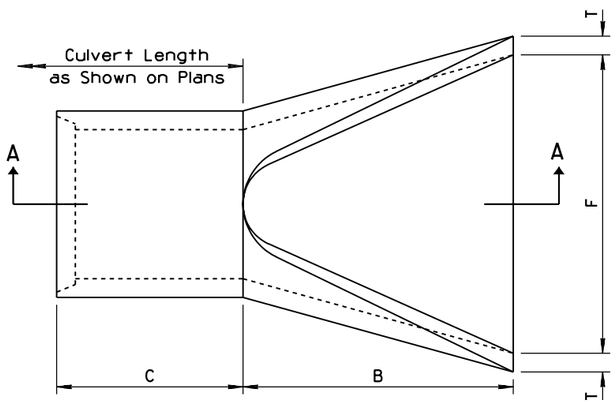

PLAN

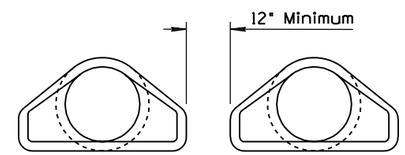

SPACING FOR MULTIPLE INSTALLATION

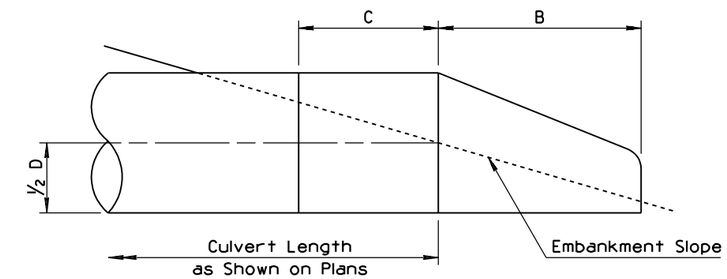

RIGHT ANGLE CULVERT

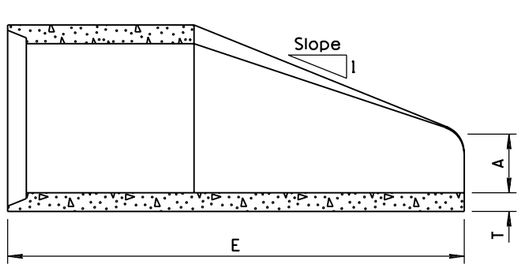

SECTION A-A

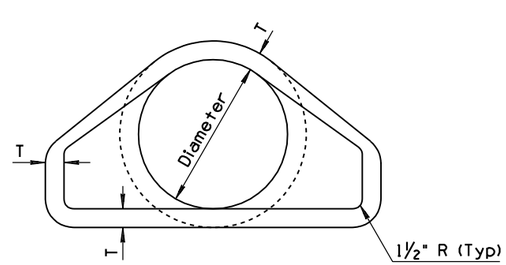

FRONT ELEVATION

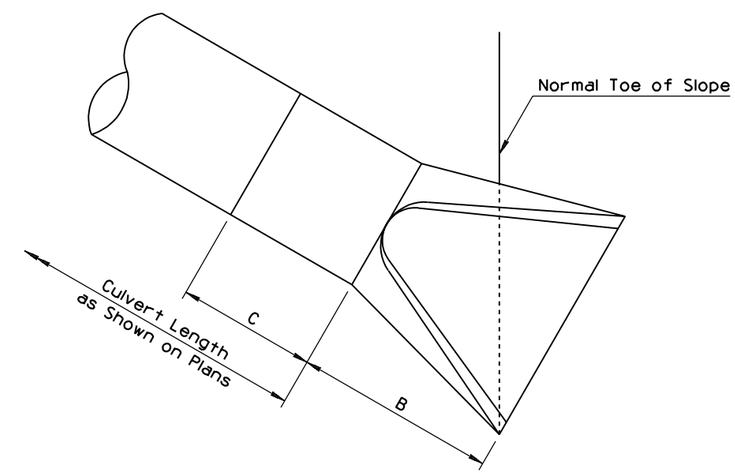

SKEWED CULVERT

APPROVED FOR DESIGN	STATE OF ARIZONA DEPARTMENT OF TRANSPORTATION ROADWAY STANDARD DRAWINGS	REV.
		9/04
APPROVED FOR DISTRIBUTION	PIPE REINFORCED CONCRETE END SECTION	DRAWING NO.
		C-13.20

NO	DESCRIPTION OF REVISIONS	MADE BY	DATE
1	MODIFIED DATA TABLE	BAF	6/98
2			
3			
4			

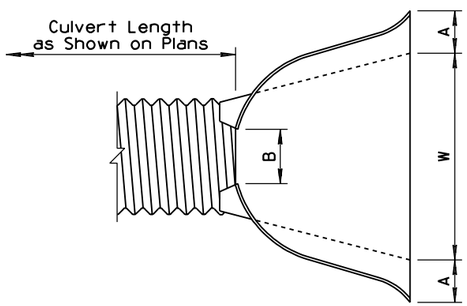

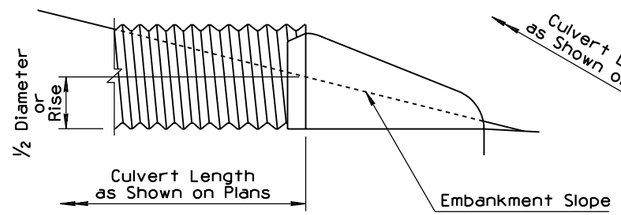

RIGHT ANGLE CULVERT

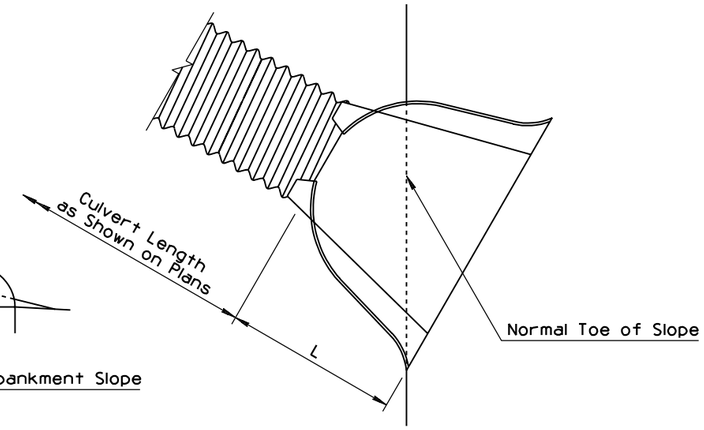

SKEWED CULVERT

GENERAL NOTES

1. The end section may be joined to the pipe or connector section by bolts, rivets, dimpled bands, slip-seam bands or threaded rod type fasteners. For allowable connector types, see table.
2. The Type 1 connector is bolted or riveted. Maximum circumferential fastener spacing shall be 12" and with a minimum of 8 fasteners per joint. The Type 1 joint may be used with either annular or helical corrugations.
3. Type 2 and 3 connectors shall only be used with annular or helical pipe with a requisite number of annular corrugations.
4. Type 4 connector shall only be used with helical pipe.
5. All steel end section components shall be galvanized.
6. Toe of embankment shall be warped to match toe of skewed end section.
7. A berm shall be added to abnormal projections per Std Dwg C-13.10.
8. The foregoing applies to all cross-section configurations.

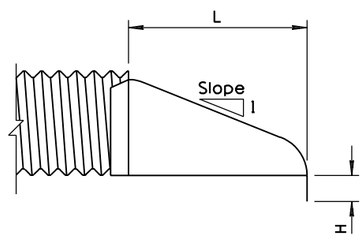

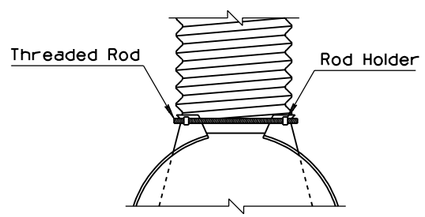

TYPE 2
THREADED ROD CONNECTIONS

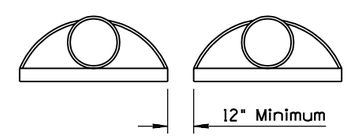

SPACING FOR MULTIPLE INSTALLATION

(1)

Circular Pipe		Dimensions (In)						
Diameter (In)	Gauge	A ±1	B Maximum	H ±1	L ±1½	W ±2	Approximate Slope	Connection Type
18	16	8	8	6	31	36	2½	2, 3, 4
24	16	10	13	6	41	48	2½	2, 3, 4
30	14	12¼	12½	8	51	57	2½	2, 4
36	14	14½	12	9	60	72	2½	2, 4
42	12	17	11	10½	69	84	2½	3

(1)

Pipe Arch			Dimensions (In)						
Span (In)	Rise (In)	Gauge	A ±1	B Max	H ±1	L ±1½	W ±2	Approximate Slope	Connection Type
21	15	16	7½	11	6	24	36	2½	2, 3, 4
28	20	16	8	16	6	32	48	2½	2, 3, 4
35	24	14	10	16	6	39	60	2½	2, 4
42	29	14	12	12	7½	46	75	2½	2, 4
49	33	12	13½	20	9	53	84	2½	3

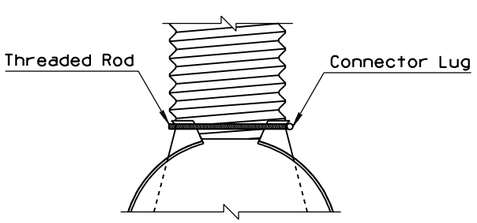

TYPE 3
THREADED ROD CONNECTIONS

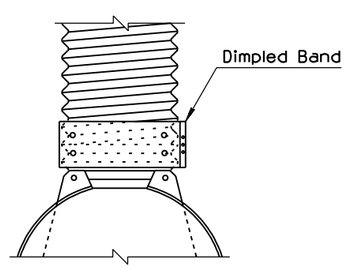

TYPE 4
DIMPLED BAND CONNECTIONS

APPROVED FOR DESIGN	STATE OF ARIZONA DEPARTMENT OF TRANSPORTATION ROADWAY STANDARD DRAWINGS	REV.
Mary Vipaina		9/04
APPROVED FOR DISTRIBUTION	PIPE CORRUGATED METAL END SECTION	DRAWING NO.
Julie Everett		C-13.25

NO	DESCRIPTION OF REVISIONS	MADE BY	DATE
1	DELETED GENERAL NOTE 7	RLF	9/04
2			
3			
4			

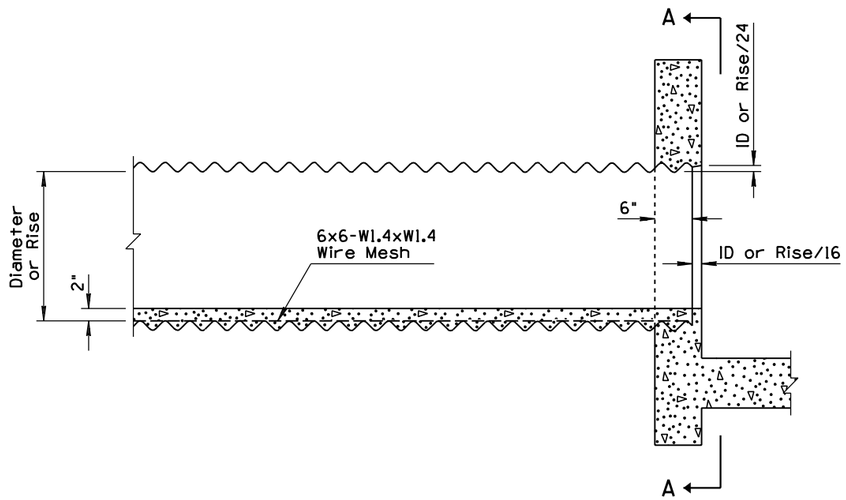

HEADWALL INSTALLATION
(SEE STANDARD DRAWING B-11.12)

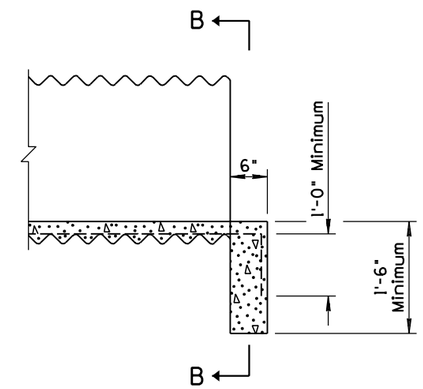

PROJECTING INSTALLATION

GENERAL NOTES

1. For lateral dimensions of invert paving, use 72° control for CMP and span for CMPA.
2. Paving shall be scored laterally at 1'-6" minimum intervals along the length of the pipe.
3. Use bevel on inlet headwall only.
4. Wire mesh shall be fastened or welded to corrugation crests at intervals and in a manner approved by the Engineer. Laps shall be 6" minimum.
5. Paving shall not be placed until backfilling is completed.
6. Concrete shall be Class B.

1

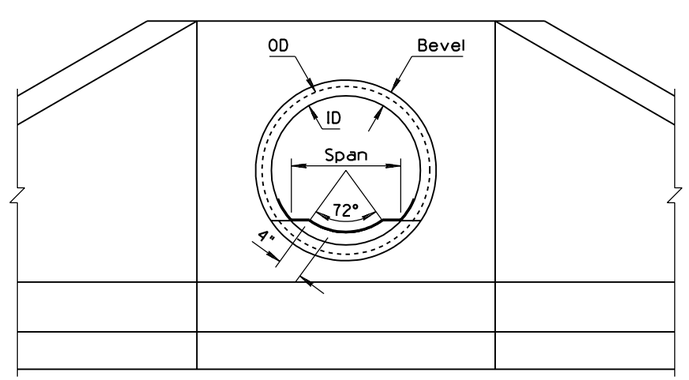

SECTION A-A

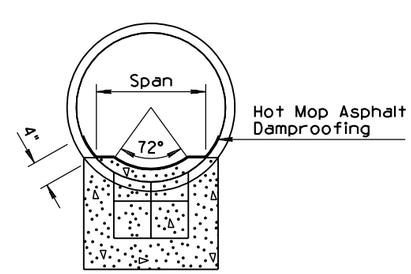

SECTION B-B

APPROVED FOR DESIGN	STATE OF ARIZONA DEPARTMENT OF TRANSPORTATION ROADWAY STANDARD DRAWINGS	REV.
		9/04
APPROVED FOR DISTRIBUTION	PIPE AND PIPE ARCH CORRUGATED METAL CONCRETE INVERT PAVING	DRAWING NO.
		C-13.30

NO	DESCRIPTION OF REVISIONS	MADE BY	DATE
1	MODIFIED TABLE & MEASUREMENT FORMAT	RLF	9/04
2	REVISED WIRE MESH DESIGNATION	RLF	9/04
3			
4			

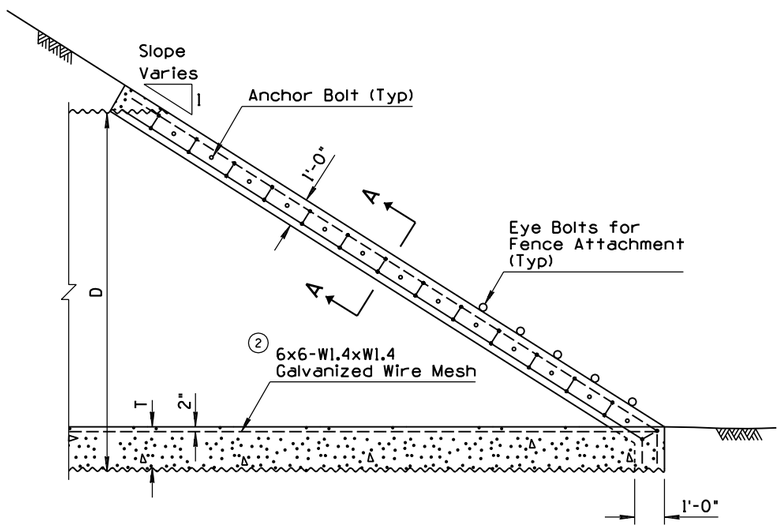

LONGITUDINAL SECTION

①

	D (In)	T (In)
Combination Vehicle and Cattle Pass	144	18
Cattle Pass Only	120	6

GENERAL NOTES

1. This end treatment is to be used only for those cattle and/or vehicle passes not used for drainage.
2. All concrete shall be Class B. An optional 12" AB invert paving base course and 6" of concrete may be used in the 144" diameter pipe.
3. Anchor bolts shall be retained in a horizontal position during pour with final tightening a minimum of 7 days after pour.
4. Pipe shall be backfilled before concrete bond beam is constructed. Minimum forming may be used.
5. Edges of wire mesh shall be fastened or welded to corrugation crests at intervals and in a manner approved by the Engineer. Laps shall be a minimum of 6".
6. For installation normal to roadway centerline only.

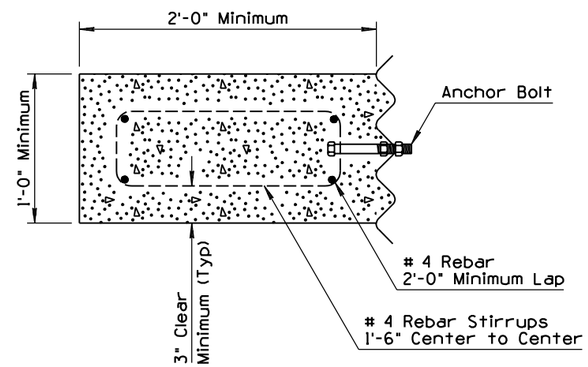

SECTION A-A

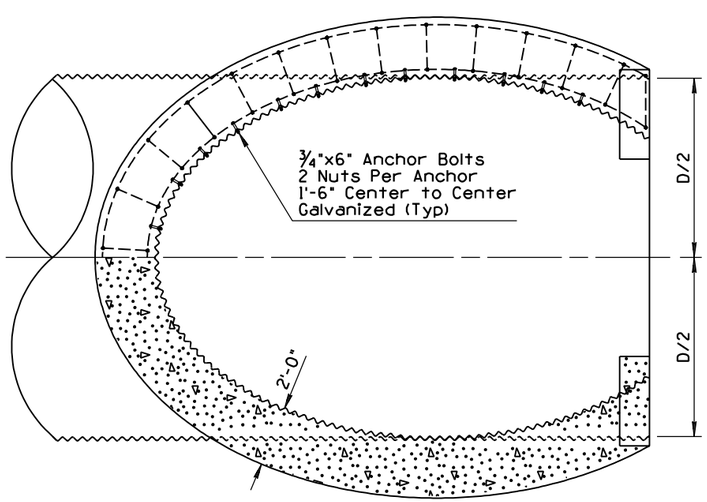

PLAN NORMAL TO SLOPE

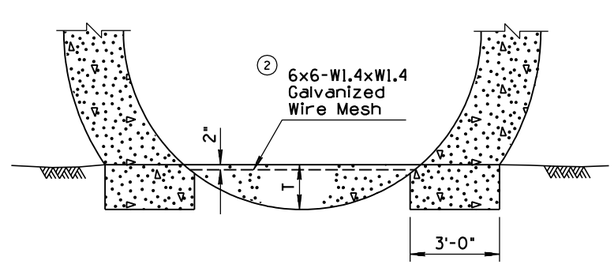

END ELEVATION

APPROVED FOR DESIGN	STATE OF ARIZONA DEPARTMENT OF TRANSPORTATION ROADWAY STANDARD DRAWINGS	REV.
		9/04
APPROVED FOR DISTRIBUTION	PIPE CATTLE/VEHICLE PASS MITERED END TREATMENT	DRAWING NO.
		C-13.55

NO	DESCRIPTION OF REVISIONS	MADE BY	DATE
1	ADDED DESIGNATION	RLF	9/04
2	ADDED NOTE	RLF	9/04
3	REMOVED AB CLASS 2 CALLOUT	RLF	9/04
4	ADDED GENERAL NOTE 15	RLF	/04

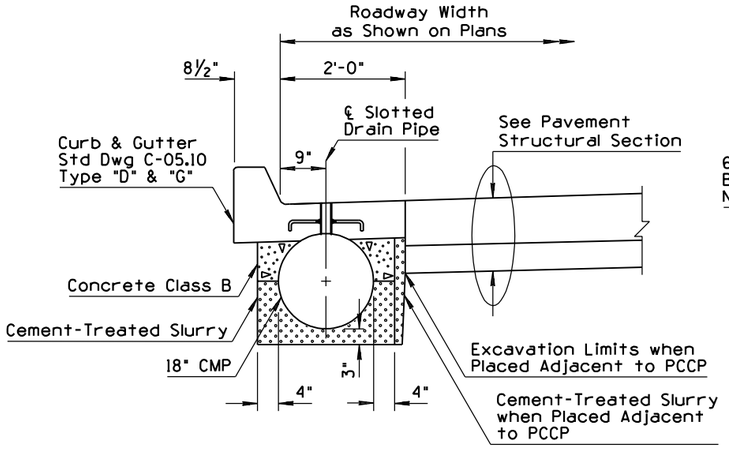

TYPE D & G CURB AND GUTTER
WITH SLOTTED DRAIN

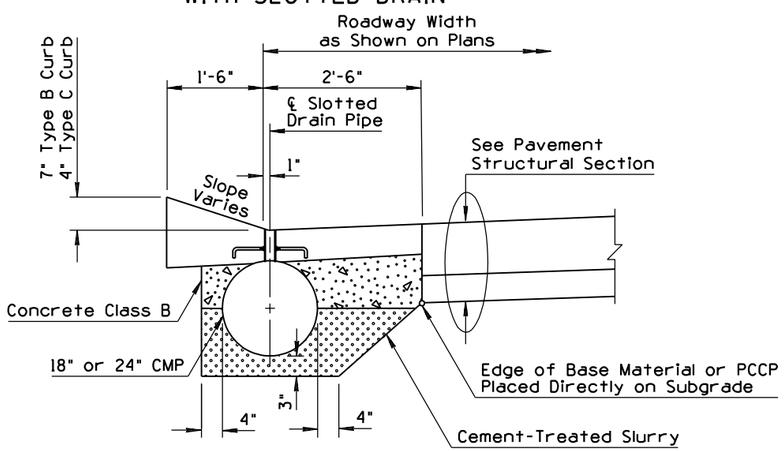

TYPE B OR C CURB AND GUTTER
WITH SLOTTED DRAIN

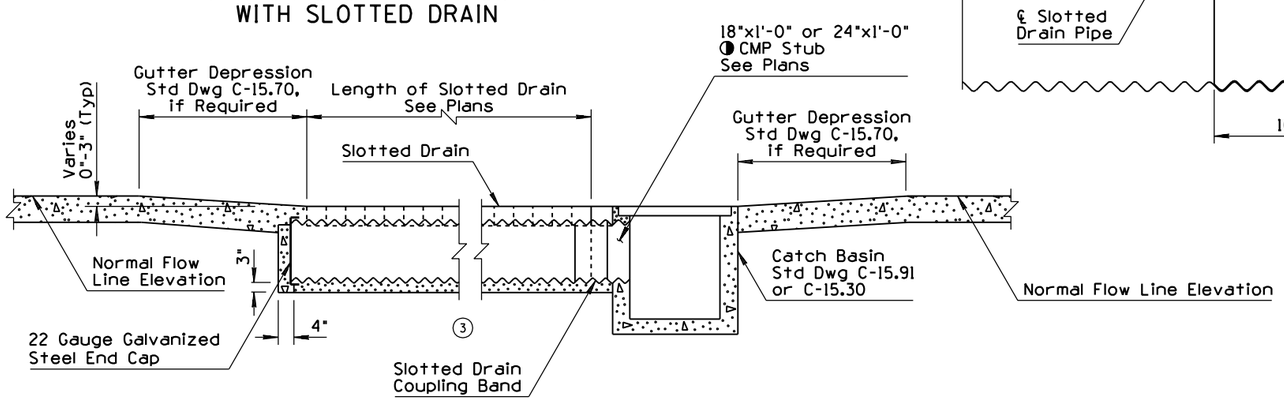

CONNECTION OF SLOTTED DRAIN TO CATCH BASIN
AND SLOTTED DRAIN END CAP

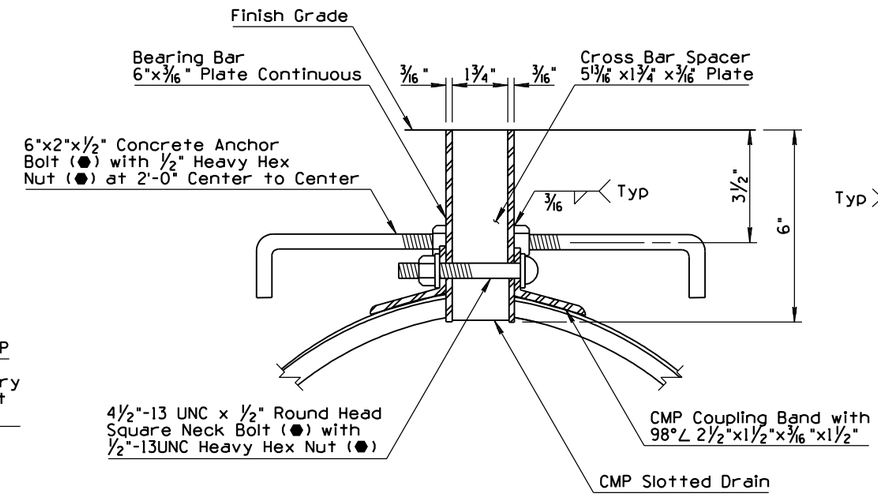

SECTION A-A

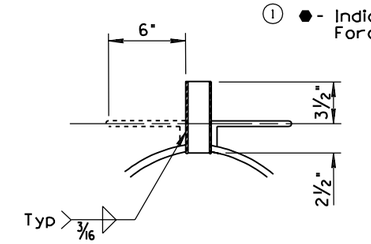

SECTION B-B

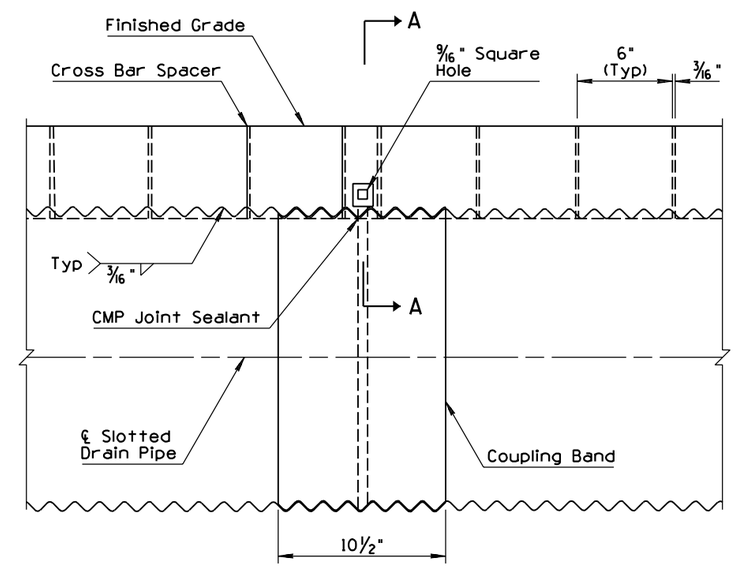

① ●- Indicates AASHTO, AGC & ARTBA Task Force 13 Report designation

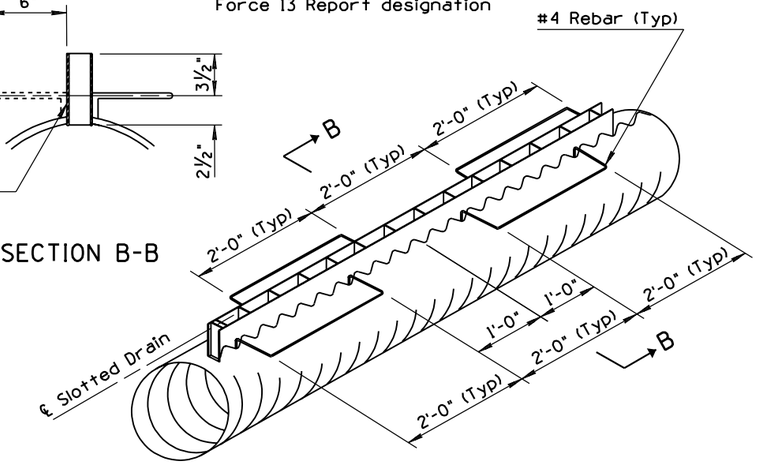

GENERAL NOTES

1. Slotted drain pipe shall be 2⅔"x½" corrugated steel pipe with a minimum wall thickness of 0.064" and shall conform to the requirements of AASHTO M36.
2. All concrete shall be Class B.
3. Rebar shall conform to Std Spec 1003-2.
4. Structural steel shall conform to ASTM A36.
5. Concrete anchors shall conform to ASTM A307 and hex nuts shall conform to ASTM A563 Grade A.
6. All slotted drain pipe hardware except anchor bolts and rebar shall be given two coats of Number 1 paint.
7. When annular pipe is used, apply water proof sealer before attaching coupling band.
8. When helical pipe is used, it shall be formed with at least one annular corrugation at each end of each pipe section. Water proof sealer shall be applied to the annular corrugation prior to attachment of coupling band.
9. Cover slot during construction with removable tape or other acceptable substitute.
10. Slotted drain pipe shall be clean at the time of final acceptance.
11. Concrete curb and gutter through the slotted drains shall be paid for under the respective curb and gutter items.
12. Refer to curb and gutter details for dimensions and details not shown.
13. Joints in concrete curb & gutter shall match adjoining PCCP and slotted drain bands.
14. All welding shall be in accordance with Std Spec 604-3.06.
15. ④ Bolts or rebar may be used for concrete anchoring.

② ◑ The 18"x1'-0" or 24"x1'-0" CMP stub shall be included in the price of respective catch basins.

APPROVED FOR DESIGN	STATE OF ARIZONA DEPARTMENT OF TRANSPORTATION ROADWAY STANDARD DRAWINGS	REV.
Mary Vipaina		9/04
APPROVED FOR DISTRIBUTION	SLOTTED DRAIN DETAILS	DRAWING NO.
Julie Everett		C-13.60

NO	DESCRIPTION OF REVISIONS	MADE BY	DATE
1	REVISED CATCH BASIN REFERENCE	RLF	9/04
2			
3			
4			

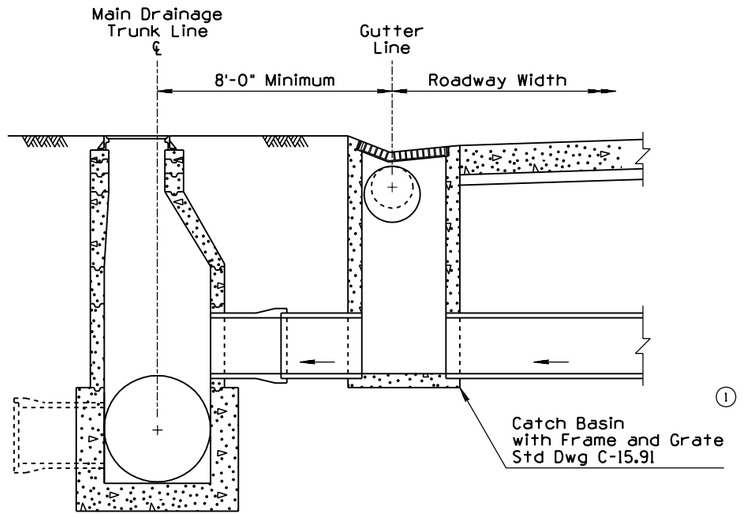

SECTION A-A
TYPICAL CONNECTION BETWEEN
CATCH BASIN AND MANHOLE

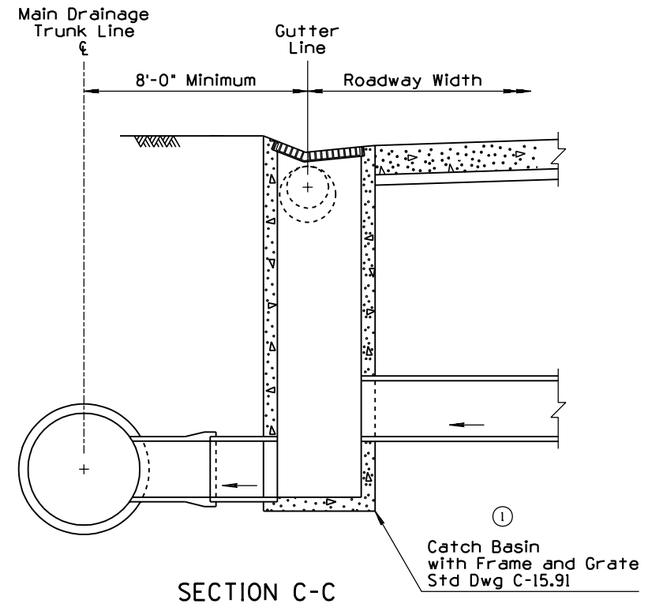

SECTION C-C
TYPICAL CONNECTION BETWEEN
CATCH BASIN AND MAIN STORM DRAIN

GENERAL NOTES

1. Pipe collars are not required where direct catch basin connections can be made within 7° of a normal 90° installation, either horizontally or vertically.
2. "T" connections direct to the main drainage trunk line should be avoided and used only where manhole connections are impractical.

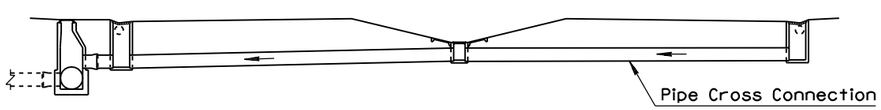

SECTION B-B

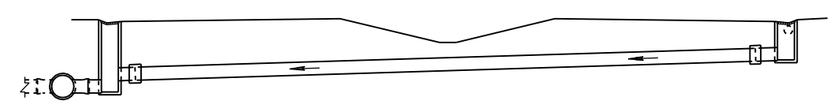

SECTION D-D

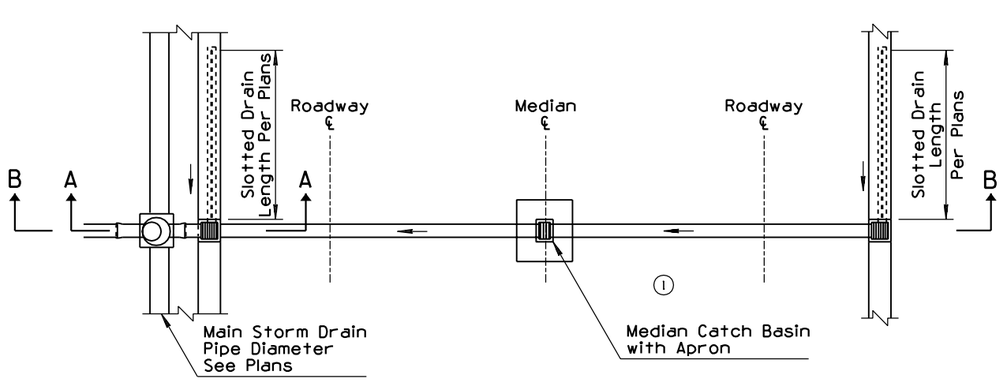

PLAN
TYPICAL SLOTTED DRAIN AND CATCH BASIN
INSTALLATION WITH MANHOLE

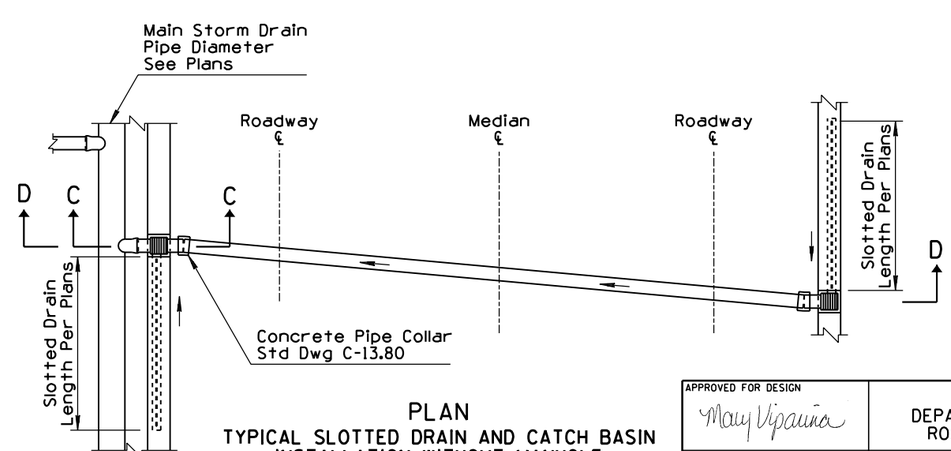

PLAN
TYPICAL SLOTTED DRAIN AND CATCH BASIN
INSTALLATION WITHOUT MANHOLE

APPROVED FOR DESIGN Mary Viparina	STATE OF ARIZONA DEPARTMENT OF TRANSPORTATION ROADWAY STANDARD DRAWINGS	REV. 9/04
APPROVED FOR DISTRIBUTION	SLOTTED DRAIN INSTALLATION DETAILS	DRAWING NO. C-13.65

NO	DESCRIPTION OF REVISIONS	MADE BY	DATE
1	REARRANGED STD	PNB	7/94
2			
3			
4			

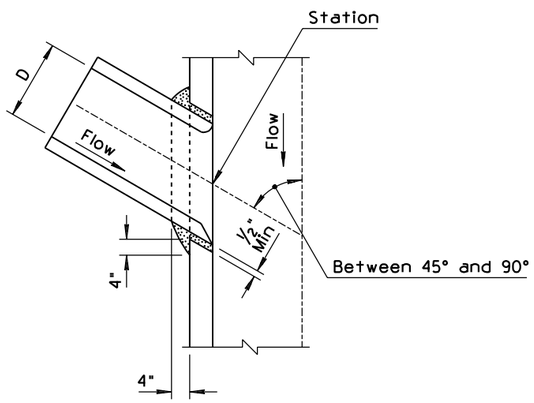

SECTION A-A

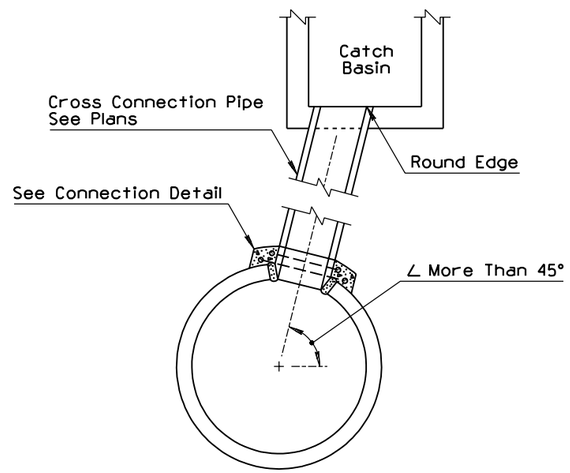

CATCH BASIN ABOVE STORM DRAIN
TYPE 2

GENERAL NOTES

1. Prefabricated tees shall be used when the outside diameter of the inlet pipe exceeds one half of the inside diameter of the main storm drain, except when the manholes are shown on plans.
2. Centerline of the inlet pipe shall intersect the centerline of the main storm drain except when elevation "S" is shown on plans.
3. If ∠ is 45° or less, Type 1 connection shall be used.
4. All concrete shall be Class B.
5. All rebar shall conform to Std Specs 1003-1 & 2.
6. Rebar shall have 2" minimum cover.

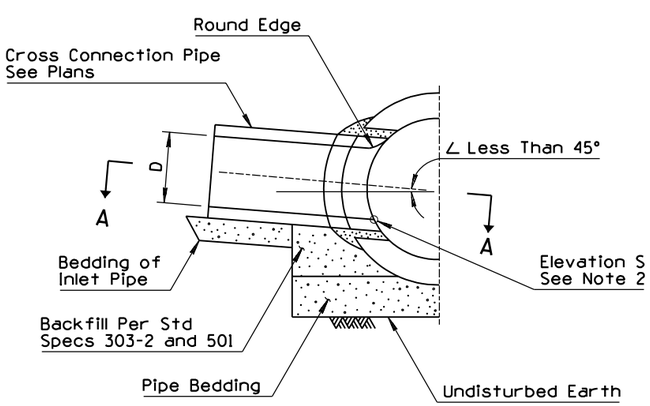

SIDE INLET
TYPE 1

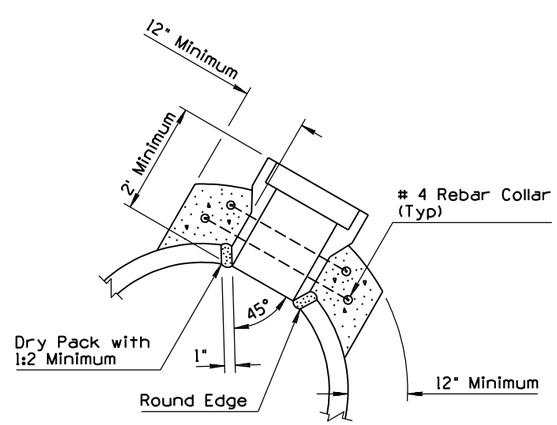

CONNECTION DETAIL
TYPE 2

APPROVED FOR DESIGN	STATE OF ARIZONA DEPARTMENT OF TRANSPORTATION ROADWAY STANDARD DRAWINGS	REV.
Mary Vipana		7/94
APPROVED FOR DISTRIBUTION	① STORM DRAIN CONNECTION DETAILS	DRAWING NO.
		C-13.70

NO	DESCRIPTION OF REVISIONS	MADE BY	DATE
1	RENAMED STANDARD	RLF	9/04
2	MODIFIED TABLE MEASUREMENT FORMAT	RLF	9/04
3	MODIFIED STEEL QUANTITIES	RLF	9/04
4			

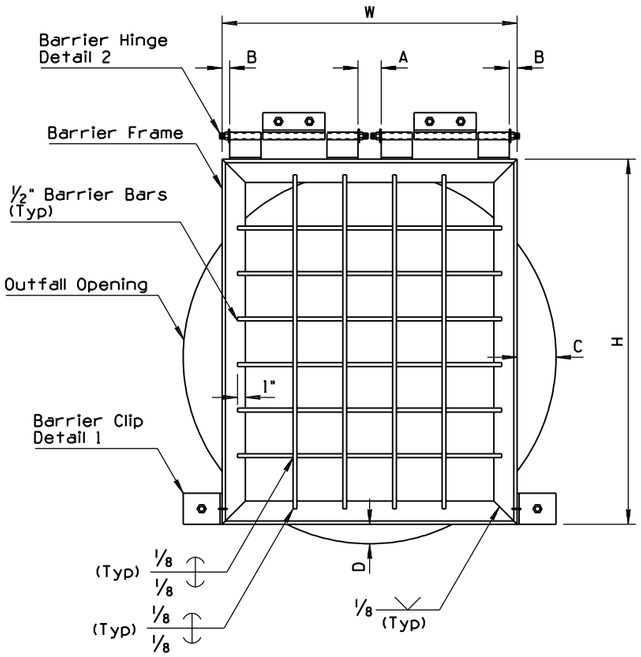

PIPE ACCESS BARRIER FRONT ELEVATION

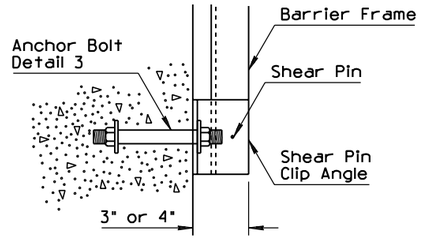

SECTION A-A

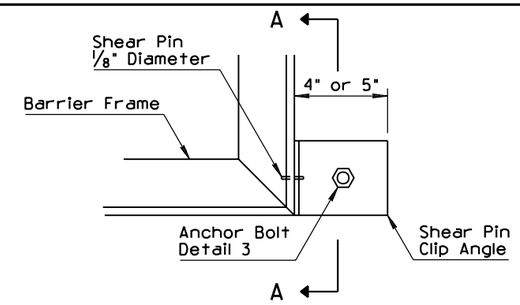

DETAIL 1

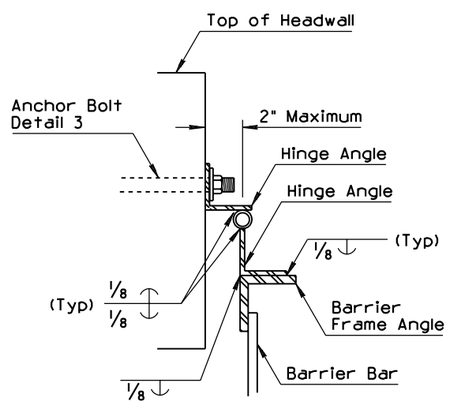

SECTION B-B

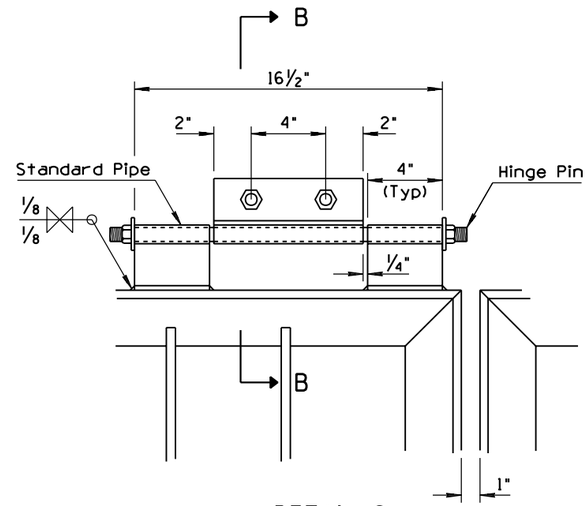

DETAIL 2

GENERAL NOTES

1. All shear pin angles shall fit snug and true to face. Cover with waterproof grease prior to installation of pin.
2. Shear pin holes in the angle shall be drilled for a tight fit of the pins.
3. Both ends of the shear pins shall be peened after installation.
4. Shear pin material shall be commercially pure aluminum wire alloy 1100, Temper 0, Federal Spec QQ-A411.
5. Galvanize all ferrous parts after fabrication.
6. Frame and hinge angles shall have the outstanding legs out.
7. All steel shall be in accordance with ASTM A36.
8. Barrier bars shall be equally spaced.
9. Hinge pin material shall be bolt stock and threaded on both ends so nut and lock washer are flush with the lower angle. Cover pin with waterproof grease prior to installation. Upset or damage exposed threads after installation.
10. All welding shall be in accordance with Std Spec 604-3.06.

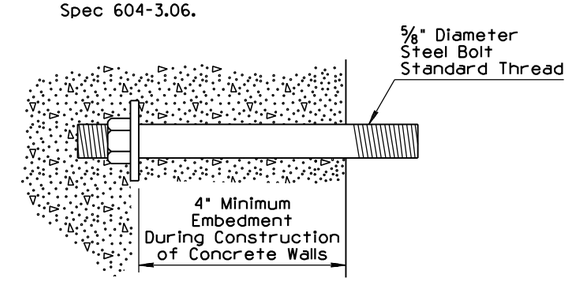

DETAIL 3

(2)

ACCESS BARRIER GATE DIMENSION SCHEDULE

Outfall Pipe ID (In)	Number of Barrier Gates	Frame Angles	Shear Pin Clip Angles	Hinge Pin Diameter (In)	Hinge Angles	Hinge Std Pipe Diameter (In)	Number & Length of Vertical Bars	Number & Length of Horizontal Bars	H (In)	W (In)	A (In)	B (In)	C (In)	D (In)	(3) Structural Steel (Lbs)
30	1	2 x2 x¼	4 x4 x¼	½	2 x2 x¼	¾	4-31	4-34	33	36	3	0	-3	2	80
36	1	2 x2 x¼	4 x4 x¼	½	2 x2 x¼	¾	4-31	4-34	33	36	3	0	0	3.5	80
42	1	2 x2 x¼	4 x4 x¼	½	2 x2 x¼	¾	4-41	5-34	43	36	3	0	3	0.5	90
48	1	3 x3 x7/16	5 x3 x¼	¾	2½ x2½ x¼	1	4-46	6-34	50	38	3	1	5	1	180
54	1	3 x3 x7/16	5 x3 x¼	¾	2½ x2½ x¼	1	5-52	7-40	56	44	5	3	5	2	205
60	1	3 x3 x7/16	5 x3 x¼	¾	2½ x2½ x¼	1	6-58	8-46	62	50	9	4	5	3	235
66	1	3 x3 x7/16	5 x3 x¼	¾	2½ x2½ x¼	1	7-64	9-52	68	56	11	6	5	4	265
72	2	3 x3 x7/16	5 x3 x¼	¾	2½ x2½ x¼	1	4-69 *	9-34 *	73	38	3	1	-2.5	5	445
78	2	3 x3 x7/16	5 x3 x¼	¾	2½ x2½ x¼	1	4-75 *	10-34 *	79	38	3	1	0.5	5	470
84	2	3 x3 x7/16	5 x3 x¼	¾	2½ x2½ x¼	1	4-81 *	11-34 *	85	38	3	1	3.5	5	495
90	2	3 x3 x7/16	5 x3 x¼	¾	2½ x2½ x¼	1	4-87 *	12-36 *	91	40	3	2	4.5	5	525
96	2	3 x3 x7/16	5 x3 x¼	¾	2½ x2½ x¼	1	5-93 *	13-39 *	97	43	4	3	4.5	5	580

* Per Gate

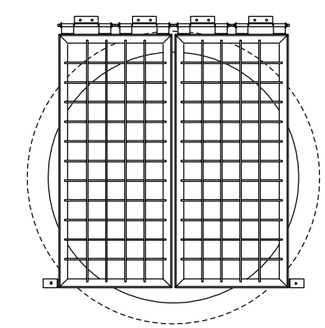

INSTALLATION DETAIL
FOR DOUBLE GATES

APPROVED FOR DESIGN	STATE OF ARIZONA DEPARTMENT OF TRANSPORTATION ROADWAY STANDARD DRAWINGS	REV.
Mary Vipaina		9/04
APPROVED FOR DISTRIBUTION	STORM DRAIN OUTLET BARRIER GATE (1)	DRAWING NO. (1)
Julie Everett		C-13.75

NO	DESCRIPTION OF REVISIONS	MADE BY	DATE
1	RENAMED STANDARD FROM C-13.75, SHEET 2	RLF	9/04
2			
3			
4			

GENERAL NOTES

1. Compact soil at end of pipe plug to 95% of maximum density.
2. If depth of cover is less than 5' or greater than 10', increase plug thickness a minimum of 4".

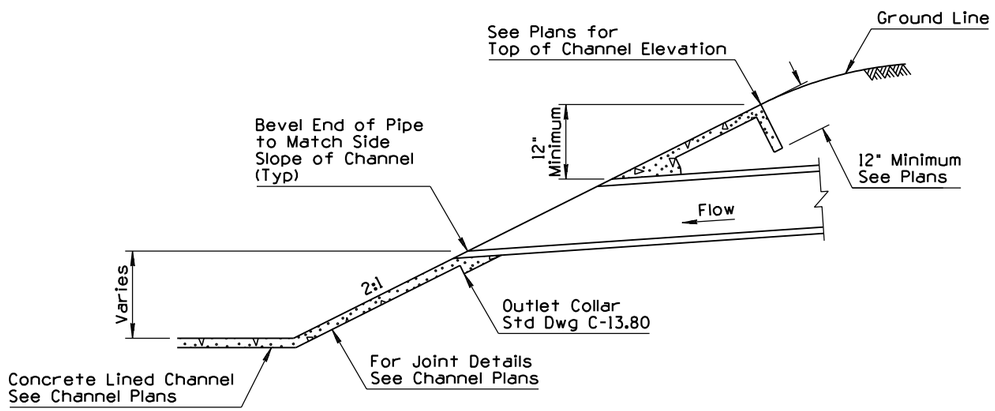

DRAINAGE OUTLET INTO CHANNEL

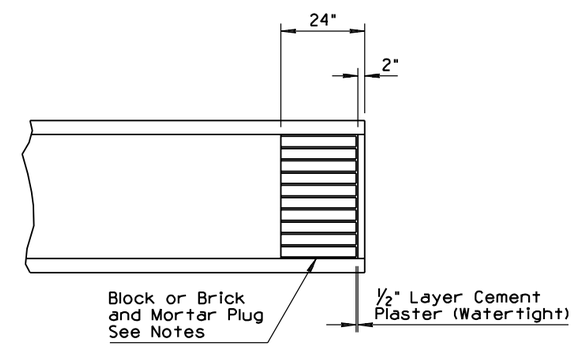

STORM DRAIN PLUG

APPROVED FOR DESIGN	STATE OF ARIZONA DEPARTMENT OF TRANSPORTATION ROADWAY STANDARD DRAWINGS	REV.
Mary Vipaina		9/04
APPROVED FOR DISTRIBUTION	STORM DRAIN OUTLET (1) AND STORM DRAIN PLUG	DRAWING NO. (1) C-13.76

NO	DESCRIPTION OF REVISIONS	MADE BY	DATE
1	MODIFIED TABLE VALUES	RLF	9/04
2	MODIFIED GENERAL NOTE 2	RLF	9/04
3	ADDED CALLOUT	RLF	9/04
4			

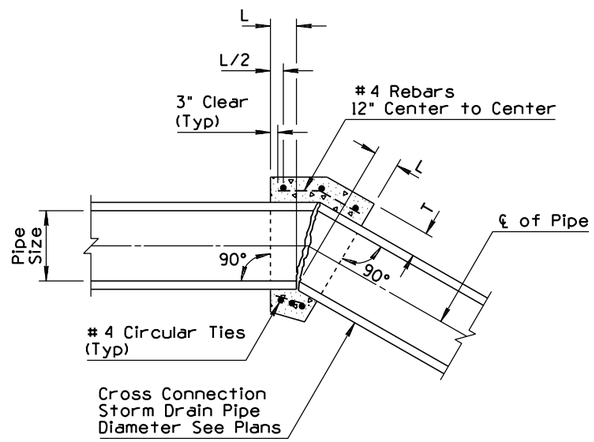

CONCRETE PIPE COLLAR

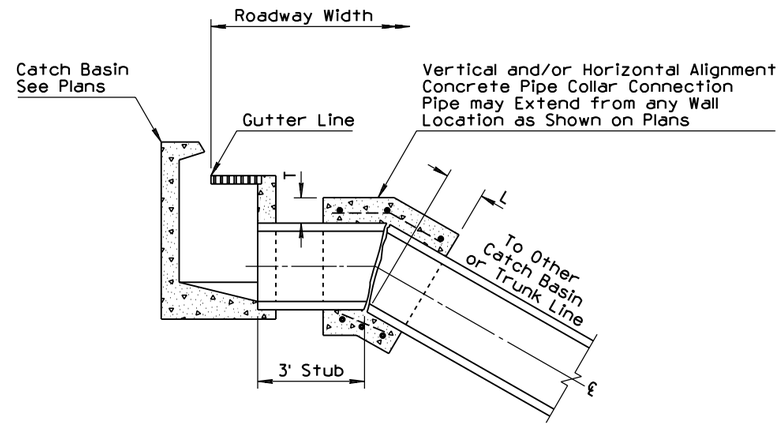

TYPICAL LATERAL CONNECTIONS TO
CATCH BASINS WITH CONCRETE COLLARS

GENERAL NOTES

1. All concrete shall be Class B.
2. (2) All rebar shall conform to Std Spec 1003-1.2.
3. All rebar shall have 3" minimum clear cover.
4. A concrete collar shall be required where pipes of different diameters or materials are joined or where the design change in alignment or grade exceeds that allowed for a standard joint.
5. When pipes of different diameters are joined with a concrete collar, "L" & "T" shall be those of the larger diameter.
6. The diameter of the circular ties shall be the outside diameter of pipe + T.
7. Pipe ends to be trimmed such that the maximum distance between pipes at any point is 2".

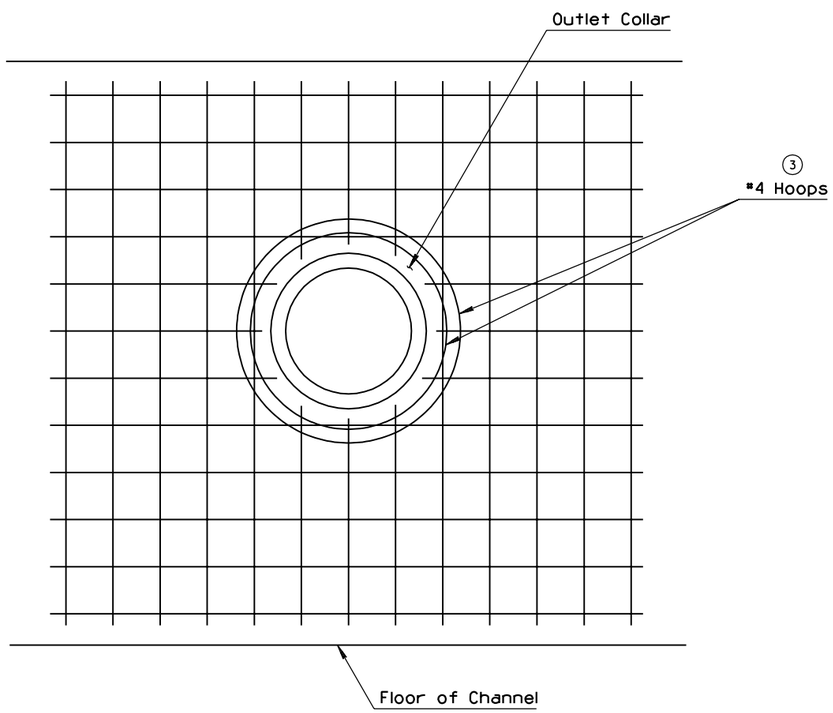

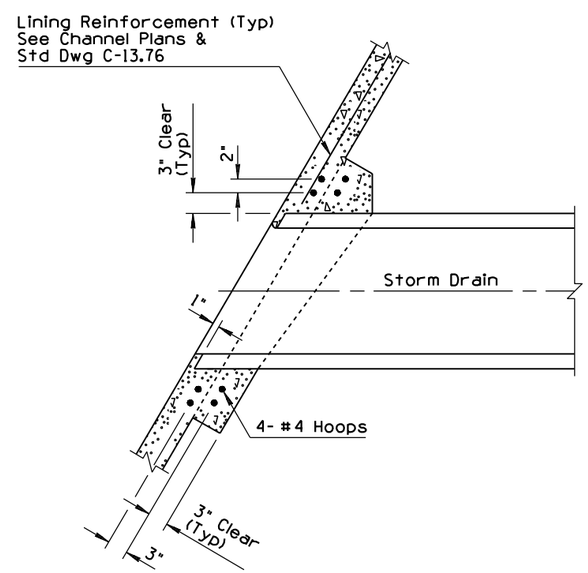

OUTLET COLLAR DETAIL

(1)

PIPE COLLAR TABLE

Pipe Size (In)	L (Ft-In)	T (In)	#4 Ties
12	1-0	4	3
18	1-0	5	3
24	1-0	6	3
30	1-6	8	3
36	1-6	8	3
42	1-9	10	4
48	1-9	10	4
52	1-9	10	4
60	1-9	11	4
66	2-0	11	5
72	2-0	14	5
78	2-0	14	5
84	2-3	16	5
96	2-3	16	5

APPROVED FOR DESIGN	STATE OF ARIZONA DEPARTMENT OF TRANSPORTATION ROADWAY STANDARD DRAWINGS	REV.
Mary Viparina		9/04
APPROVED FOR DISTRIBUTION	PIPE COLLAR DETAILS	DRAWING NO.
		C-13.80

NO	DESCRIPTION OF REVISIONS	MADE BY	DATE
1	REVISED NOTE # 5	RLF	7/01
2			
3			
4			

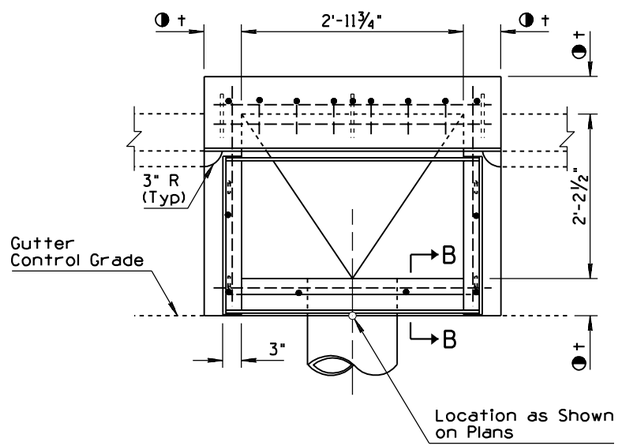

PLAN - CATCH BASIN TYPE 1 - SINGLE

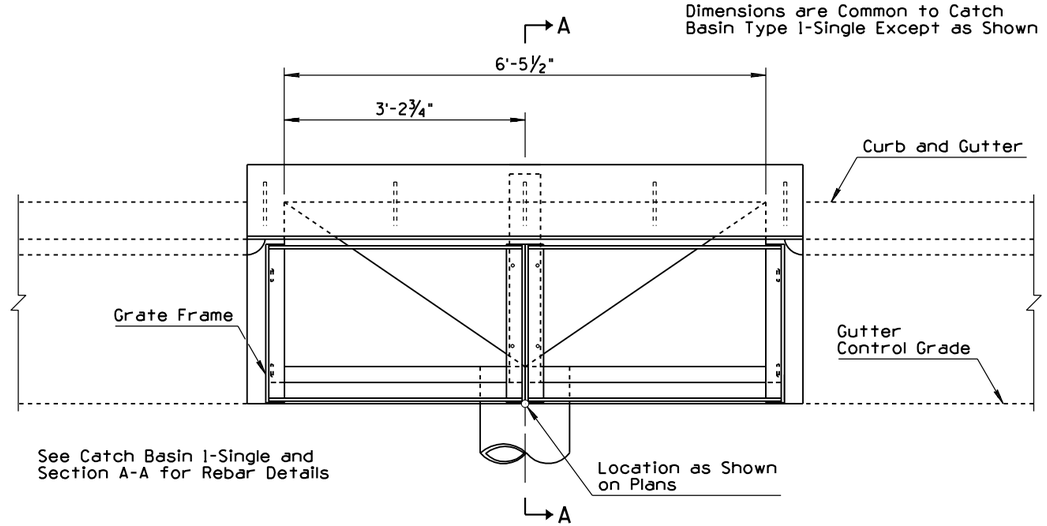

PLAN - CATCH BASIN TYPE 1 - DOUBLE

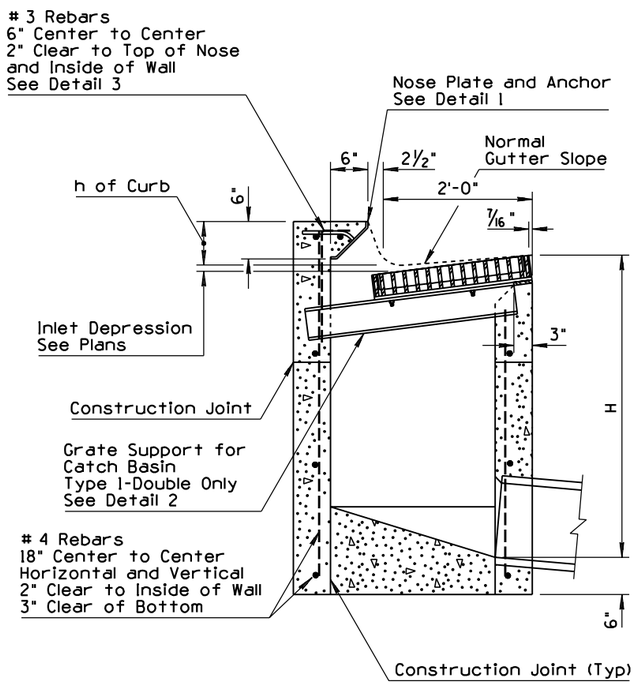

SECTION A-A

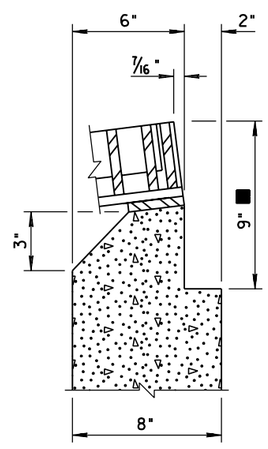

SECTION B-B

USE THIS SECTION WHEN t=8"

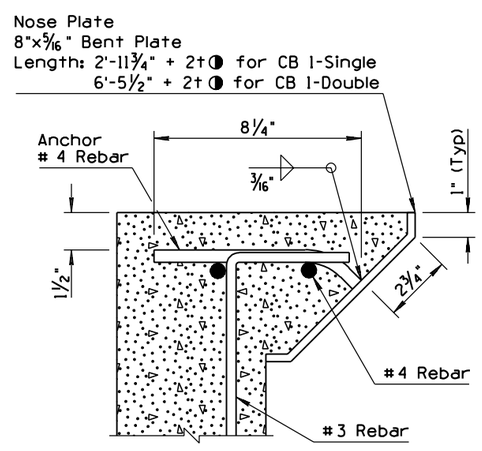

DETAIL 1

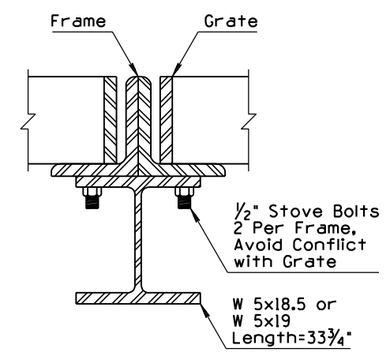

DETAIL 2

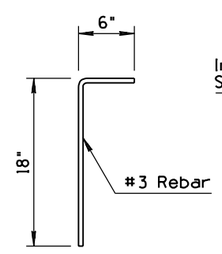

DETAIL 3

GENERAL NOTES

1. Catch basin used at roadway sag.
2. Pipes can be placed in any wall.
3. Sump floor shall be a wood troweled finish with a minimum 4:1 slope in all directions to outlet.
4. All rebar shall be ASTM A36.
5. (1) All welding shall be in accordance with Std Spec 604-3.06.
6. Grate, frame, beam and nose plate shall be given one shop coat of Number 1 paint.
7. All concrete shall be Class B.
8. Construction joints and drains shall be placed to meet field conditions. See Std Dwg C-15.70.
9. Any specified inlet depression shall be warped to opening according to Std Dwg C-15.70.
10. Silicone sealant shall be placed between the grate frame and PCCP, recessed ¼" from the pavement surface.
11. Curb opening areas, sq ft, for Type 1-single and Type 1-double equal 0.25 and 0.54, respectively, for each inch of "h" + inlet depression - 2.35". See Std Dwg C-15.70.
12. See Std Dwg C-15.50 for grate and frame details and grate opening areas.
13. ◑t = 6" when H is 8' or less
    8" when H is greater than 8'
    See Section B-B

    ■ = 9" when pavement is AC
    Match pavement thickness when pavement is PCCP

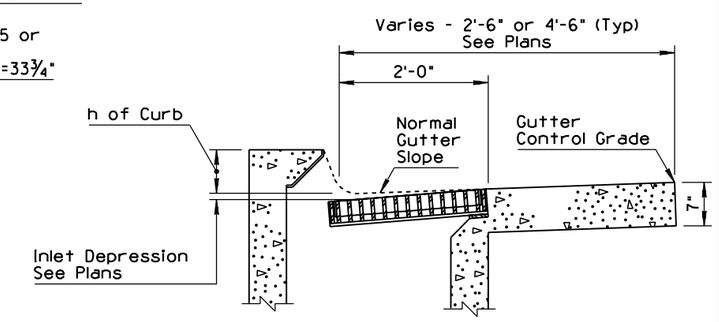

DETAIL FOR WIDE GUTTER
(SEE STD DWG C-05.10)

APPROVED FOR DESIGN	STATE OF ARIZONA DEPARTMENT OF TRANSPORTATION ROADWAY STANDARD DRAWINGS	REV. 9/04
APPROVED FOR DISTRIBUTION	CATCH BASIN TYPE 1	DRAWING NO. C-15.10

NO	DESCRIPTION OF REVISIONS	MADE BY	DATE
1	REVISED NOTES 5, 10 & 11	RLF	9/04
2	DELETED GENERAL NOTE 9	RLF	9/04
3	ADDED CALLOUT	RLF	9/04
4			

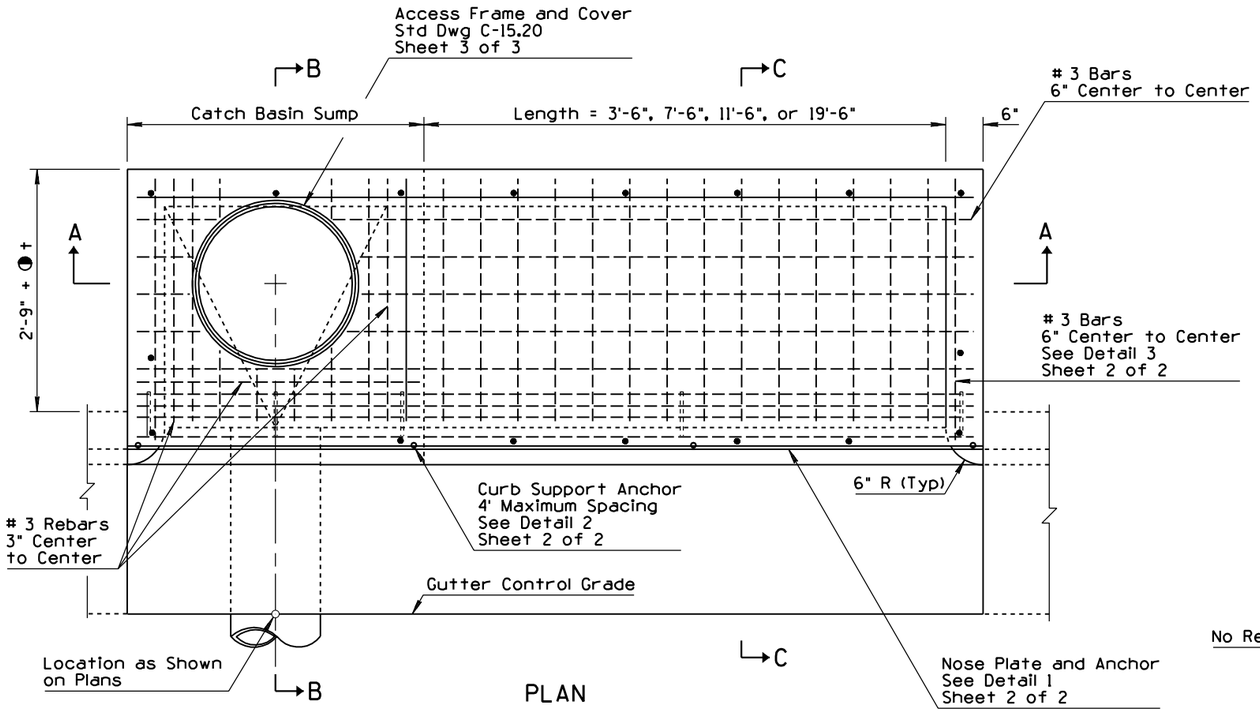

PLAN

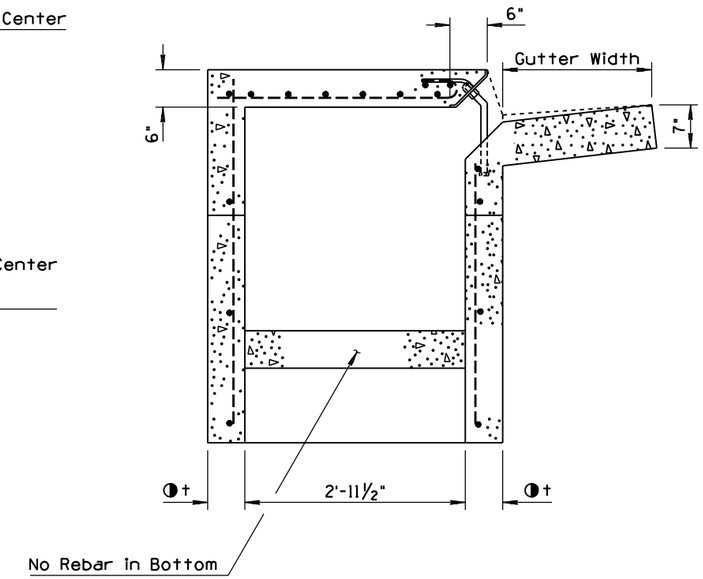

SECTION C-C

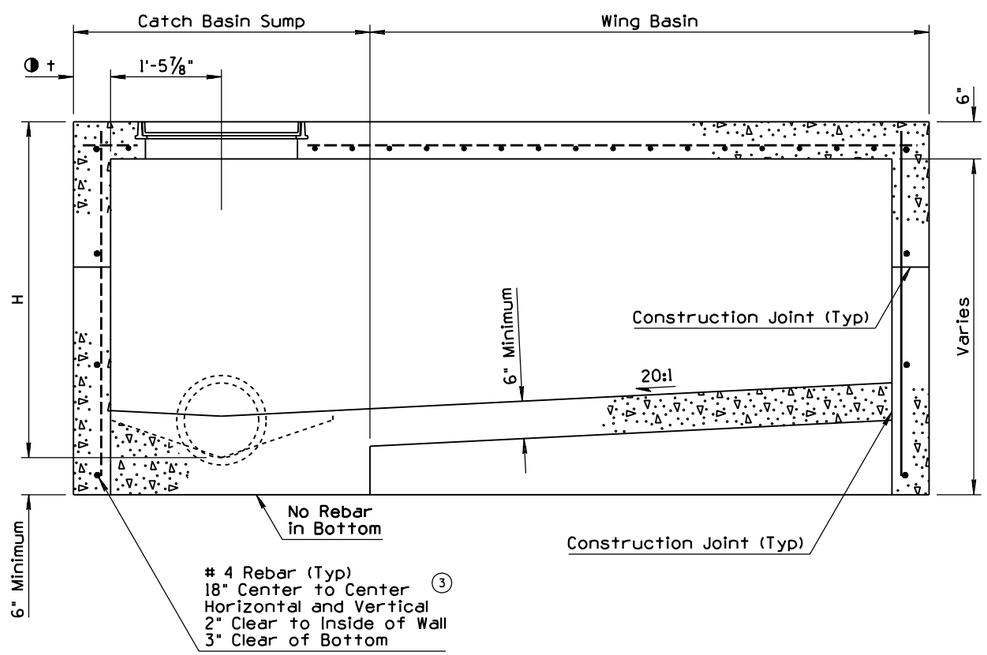

SECTION A-A
USE THIS SECTION WHEN H=5' OR LESS

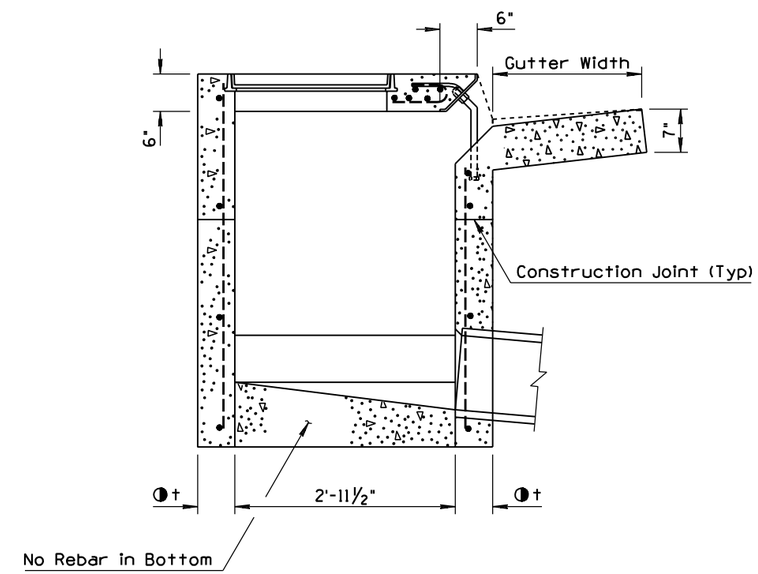

SECTION B-B

GENERAL NOTES

1. Catch basin can be used on grade or at roadway sag.
2. Catch basin has three configurations:
   Sump Only-Sump portion of catch basin (See Detail 4, Sheet 2 of 2).
   Single Wing (Illustrated)-Sump with wing basin upstream.
   Double Wing-Sump with symetrical wing basins each side.
3. Pipes can be placed in any wall except wall adjacent to wing basin.
4. Floor shall be a wood troweld finish. Slope of the sump portion of the catch basin along the axis of the pipe shall be 4:1.
5. (1) Any specified inlet depression shall be warped to opening according to Std Dwg C-15.70.
6. All rebar shall be ASTM A36.
7. Nose plate, access frame and cover shall be given one shop coat of Number 1 paint.
8. All concrete shall be Class B.
9. (2) Curb opening area (sq ft) per inch of curb "h" + gutter depression = curb opening length (ft) x 0.0833.
10. (1) All welding shall be in accordance with Std Spec 604-3.06.
11. (1) Construction joints and drains shall be placed to meet field conditions. See Std Dwg C-15.70.
12. ◑t = 6" when H is 8' or less.
    8" when H is greater than 8'.

APPROVED FOR DESIGN	STATE OF ARIZONA DEPARTMENT OF TRANSPORTATION ROADWAY STANDARD DRAWINGS	REV.
Mary Vipaina		7/01
APPROVED FOR DISTRIBUTION	CATCH BASIN TYPE 3	DRAWING NO. C-15.20 Sheet 1 of 3

NO	DESCRIPTION OF REVISIONS	MADE BY	DATE
1			
2			
3			
4			

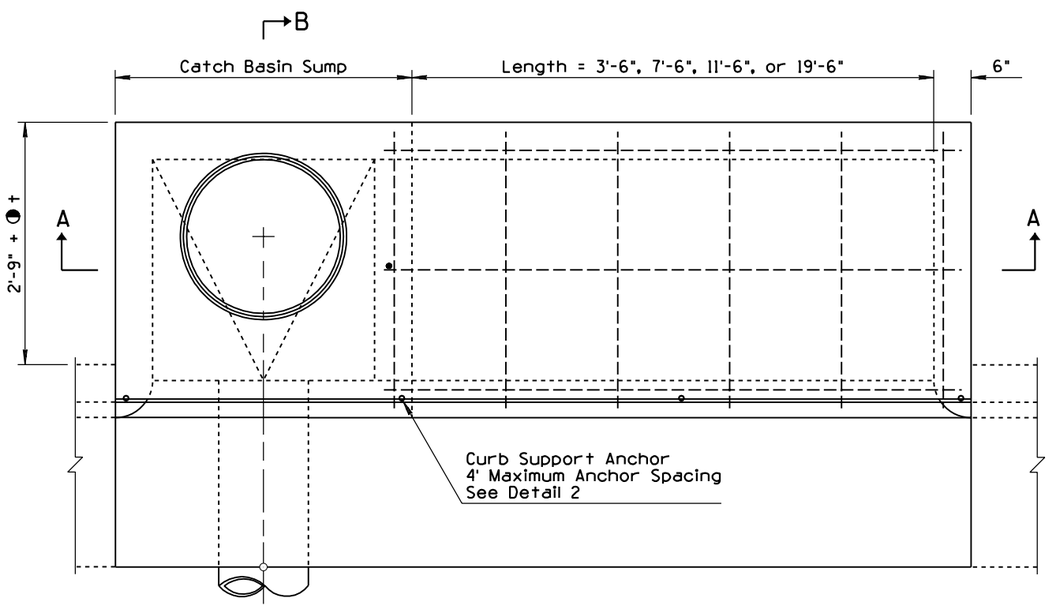

PLAN

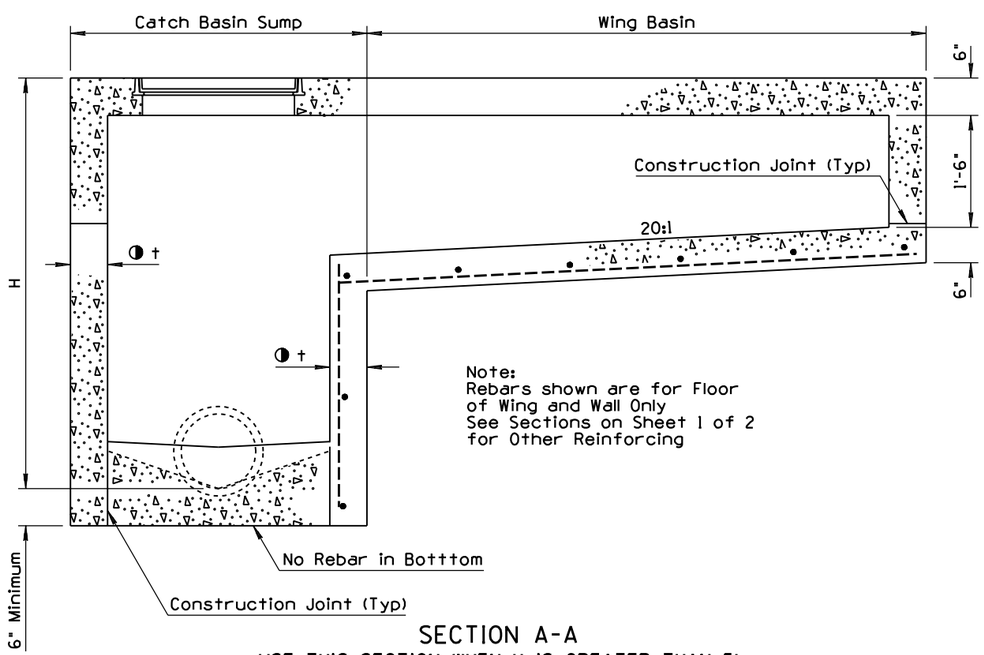

SECTION A-A
USE THIS SECTION WHEN H IS GREATER THAN 5'

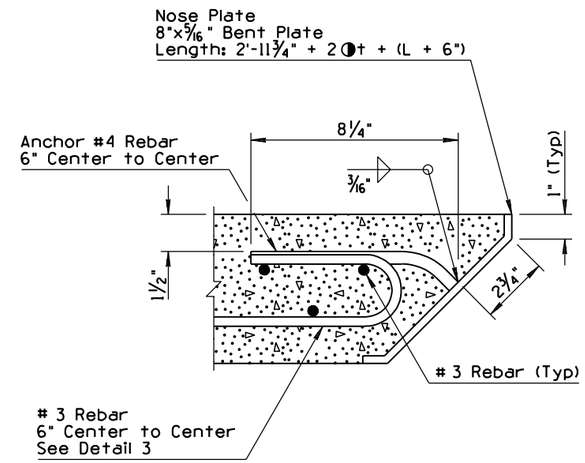

DETAIL 1

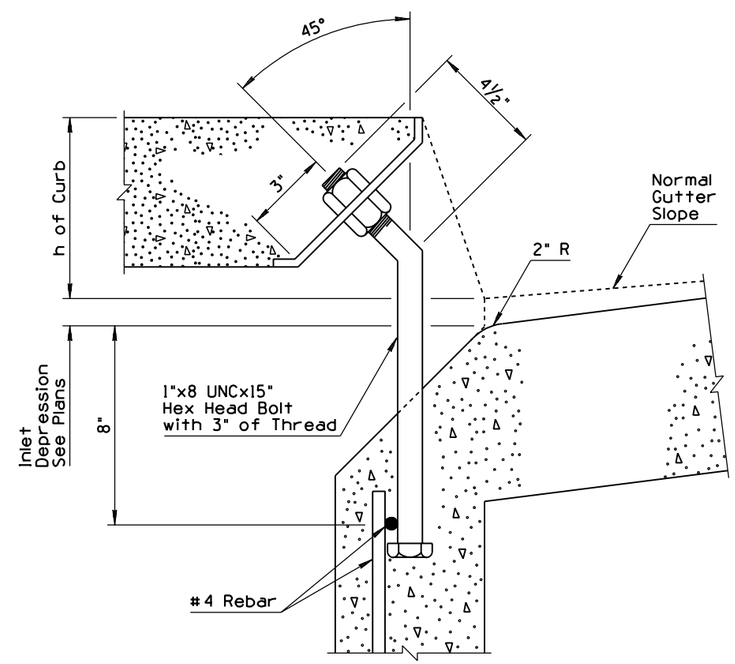

DETAIL 2
CURB SUPPORT ANCHOR

GENERAL NOTES

1. See Sheet 1 of 2 for other dimensions, notes and rebar.
2. ◑t = 6" when H is 8' or less
   8" when H is greater than 8'

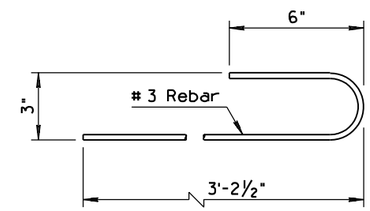

DETAIL 3

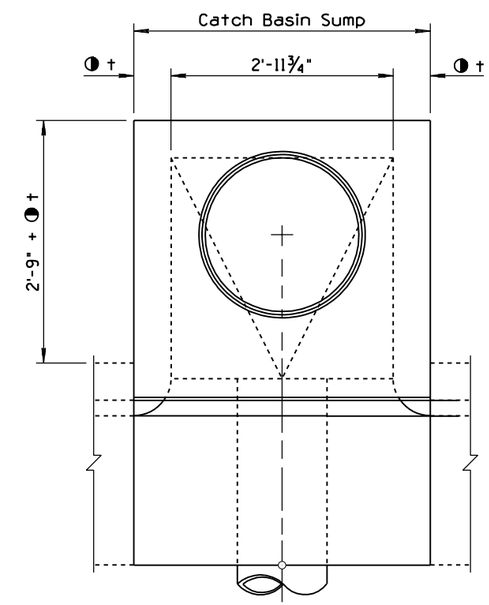

DETAIL 4

APPROVED FOR DESIGN	STATE OF ARIZONA DEPARTMENT OF TRANSPORTATION ROADWAY STANDARD DRAWINGS	REV.
Mary Vipamia		5/97
APPROVED FOR DISTRIBUTION	CATCH BASIN TYPE 3	DRAWING NO.
Julie Everett		C-15.20 Sheet 2 of 3

NO	DESCRIPTION OF REVISIONS	MADE BY	DATE
1	RENAMED STANDARD FROM C-15.65 TO C-15.20, SHEET 3 OF 3	RLF	9/04
2			
3			
4			

GENERAL NOTES

1. Cover shall be non-locking.
2. Frame and cover shall be cast iron or structural steel.
3. Catch basin access frame and cover is for use in sidewalk area only.
4. Cover shall be filled with concrete and broom finished.

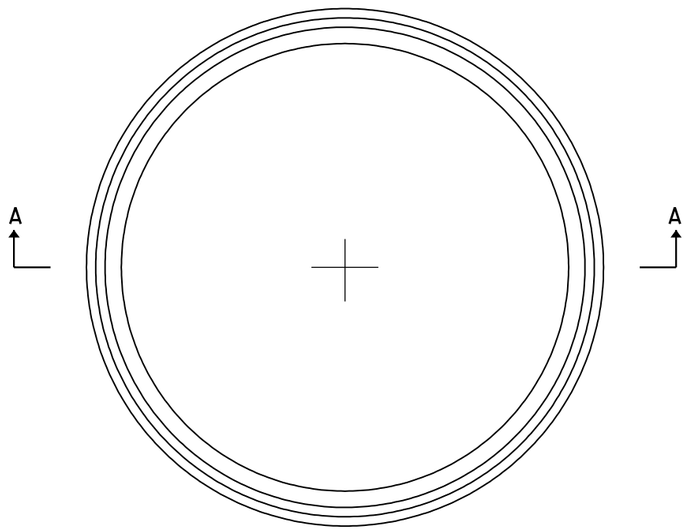

PLAN

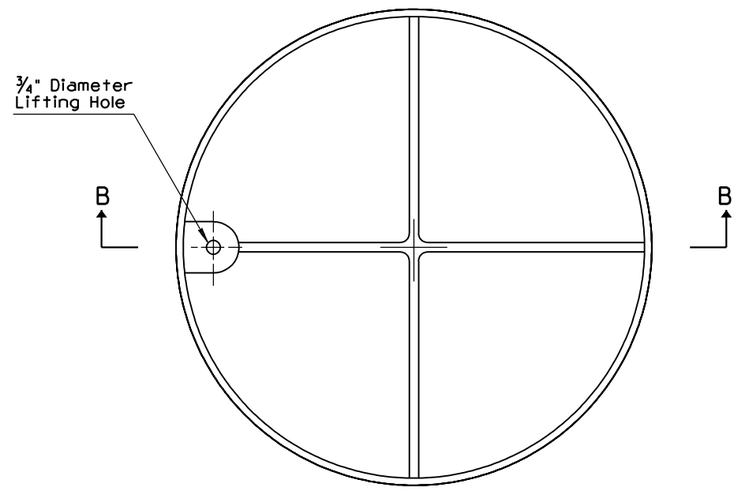

PLAN

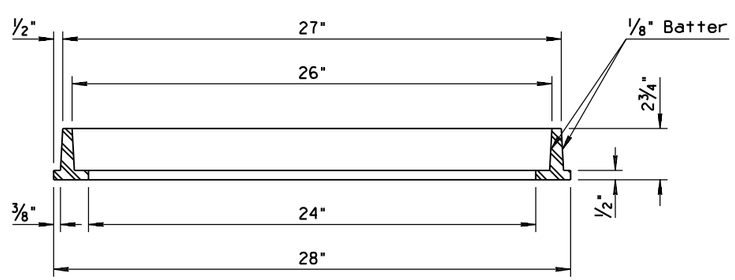

SECTION A-A
FRAME

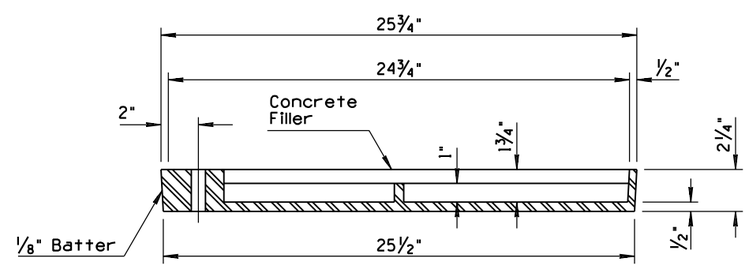

SECTION B-B
COVER

APPROVED FOR DESIGN	STATE OF ARIZONA DEPARTMENT OF TRANSPORTATION ROADWAY STANDARD DRAWINGS	REV. 9/04
APPROVED FOR DISTRIBUTION	CATCH BASIN ACCESS FRAME AND COVER DETAILS	DRAWING NO. 1 C-15.20 Sheet 3 of 3

NO	DESCRIPTION OF REVISIONS	MADE BY	DATE
1	REVISED STANDARD FOR NEW FRAME	PNB	5/97
2			
3			
4			

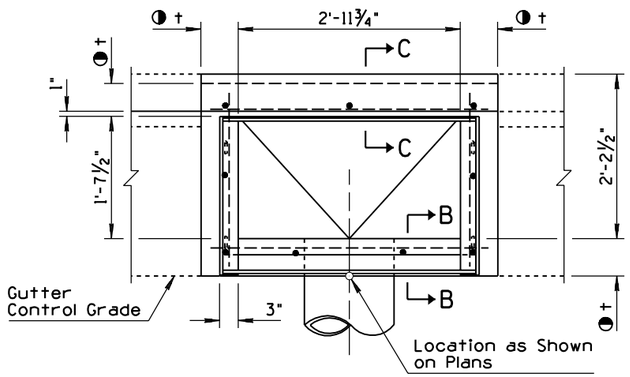

PLAN - CATCH BASIN TYPE 4 - SINGLE

Dimensions are Common to Catch Basin
Type 4-Single Except as Shown

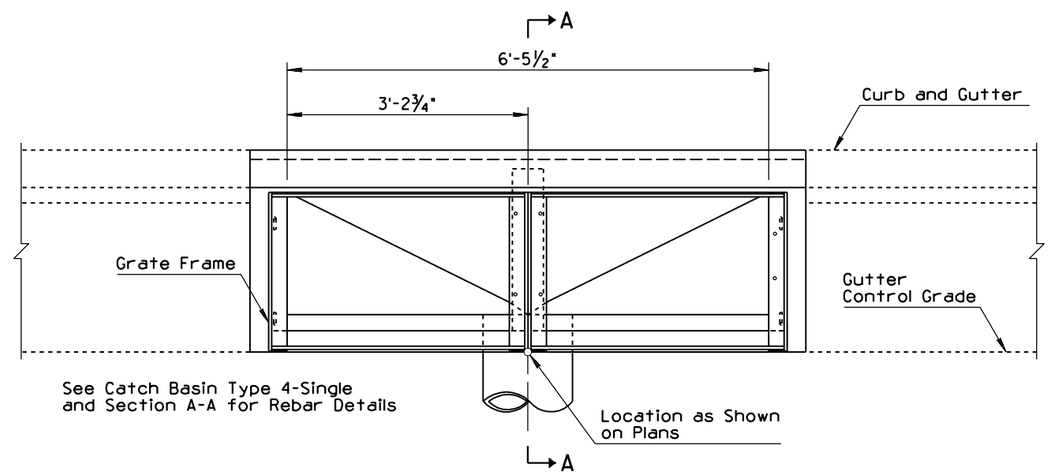

PLAN - CATCH BASIN TYPE 4 - DOUBLE

GENERAL NOTES

1. Catch basin can be used on grade or at roadway sag.
2. Pipes can be placed in any wall.
3. Floor shall be a wood troweled finish with a minimum 4:1 slope along the axis of the pipe toward the pipe.
4. Curb over catch basin shall not be constructed untill catch basin concrete has set for a minimum of 24 hours.
5. Catch basin can be used with curb and gutter (as shown) or without.
6. See Std Dwg C-15.50 for grate and frame details and opening areas.
7. Any specified inlet depression shall be warped to opening according to Std Dwg C-15.70.
8. All rebar shall be ASTM A36.
9. Grate, frame and beam shall be given one shop coat of Number 1 paint.
10. All concrete shall be Class B.
11. Construction joints and drains shall be placed to meet field conditions. See Std Dwg C-15.70.
12. Silicone sealant shall be placed between the grate frame and PCCP, recessed ¼" from the pavement surface.
13. See Detail 2 for catch basin with wide gutter.
14. ◑t = 6" when H is 8' or less.
    8" when H is greater than 8'.
    See Section B-B.

    ■ 9" when pavement is AC.
    Match pavement thickness
    when pavement is PCCP.

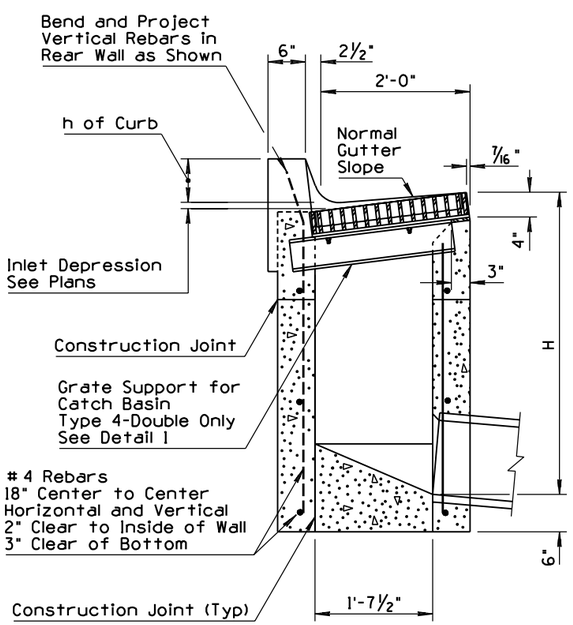

SECTION A-A

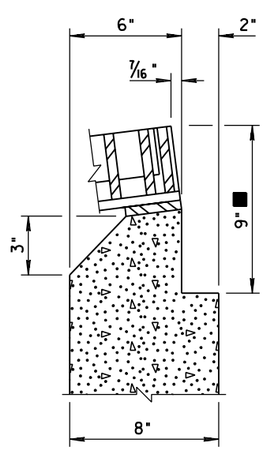

USE THIS SECTION
WHEN t=8"

SECTION B-B

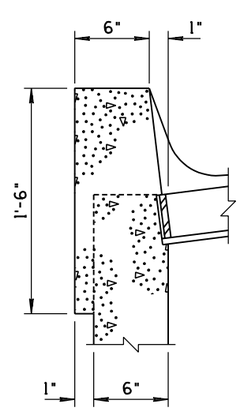

SECTION C-C

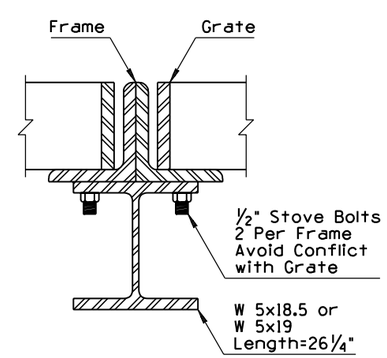

DETAIL 1

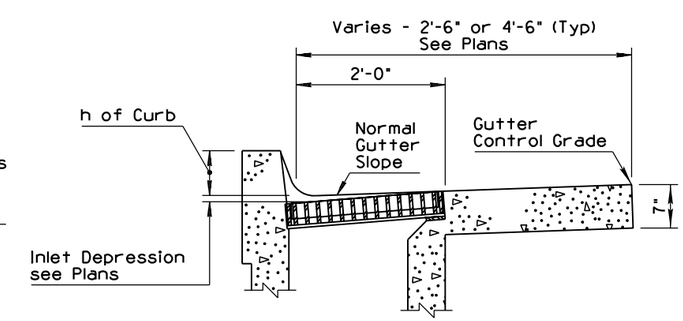

DETAIL FOR WIDE GUTTER
(SEE STD DWG C-05.10)

APPROVED FOR DESIGN	STATE OF ARIZONA DEPARTMENT OF TRANSPORTATION ROADWAY STANDARD DRAWINGS	REV. 5/97
APPROVED FOR DISTRIBUTION	① CATCH BASIN TYPE 4	DRAWING NO. C-15.30

NO	DESCRIPTION OF REVISIONS	MADE BY	DATE
1	DELETED GENERAL NOTE 9, RENUMBERED ALL AFTER 8	RLF	9/04
2	ADDED CALLOUT	RLF	9/04
3			
4			

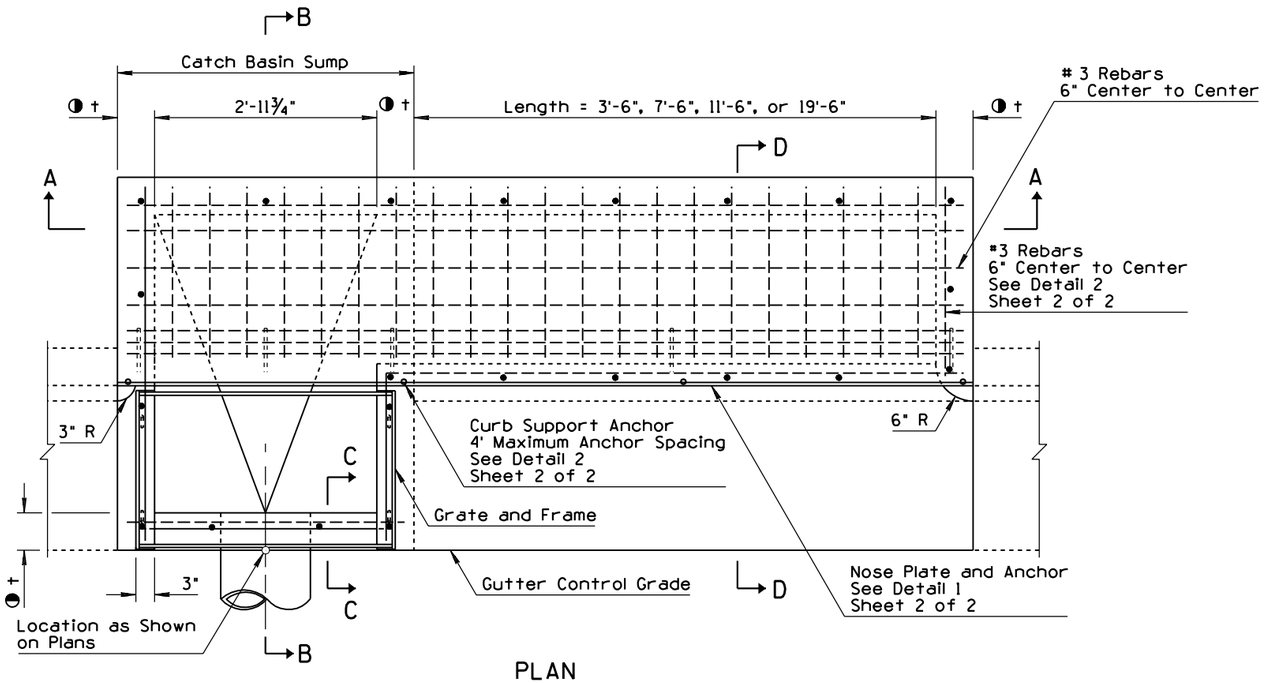

PLAN

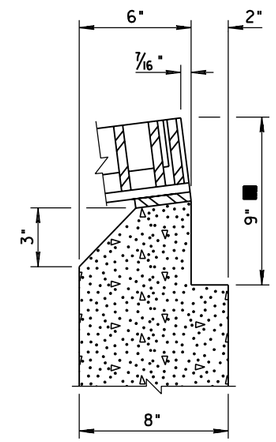

SECTION C-C

USE THIS SECTION
WHEN t=8"

GENERAL NOTES

1. Catch basin can be used on grade or at roadway sag.
2. Catch basin has three configurations:
   Sump only-sump portion of catch basin;
   Single wing (illustrated)-sump with wing basin upstream; and
   Double wing-sump with symmetrical wing basins each side.
3. Pipes can be placed in any wall except wall adjacent to a wing basin.
4. Floor shall be a wood troweled finish. Slope of the sump portion of the catch basin along the axis of the pipe shall be 4:1.
5. Any specified inlet depression shall be warped to opening according to Std Dwg C-15.70.
6. All rebar shall be ASTM A36.
7. Nose plate shall be given one shop coat of Number 1 paint.
8. All concrete shall be Class B.
9. (1) Curb opening area (sq ft) per inch of curb "h" + inlet depression = curb opening length (ft) x 0.0833.
10. All welding shall be in accordance with Std Spec 604-3.06.
11. See Std Dwg C-15.50 for grate and frame details and opening areas.
12. Construction joints and drains shall be placed to meet field conditions. See Std Dwg C-15.70.
13. Silicone sealant shall be placed between the grate frame and PCCP, recessed ¼" from the pavement surface.
14.
15. ◑t = 6" when H is 8' or less.
    8" when H is greater than 8'.
    See Section C-C.
16. ■ = 9" when pavement is AC.
    Match pavement thickness when pavement is PCCP.

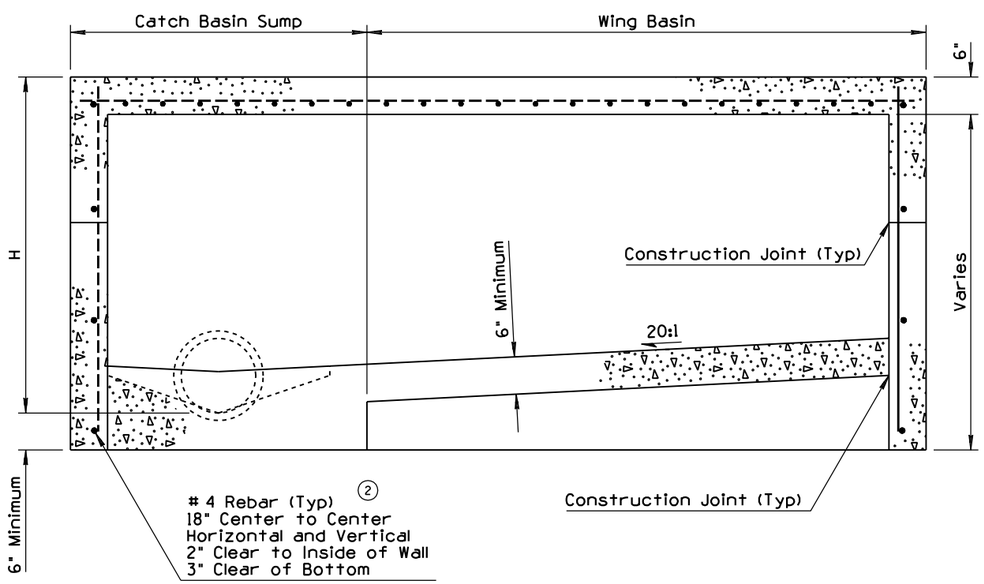

SECTION A-A
USE THIS SECTION WHEN H=5' OR LESS

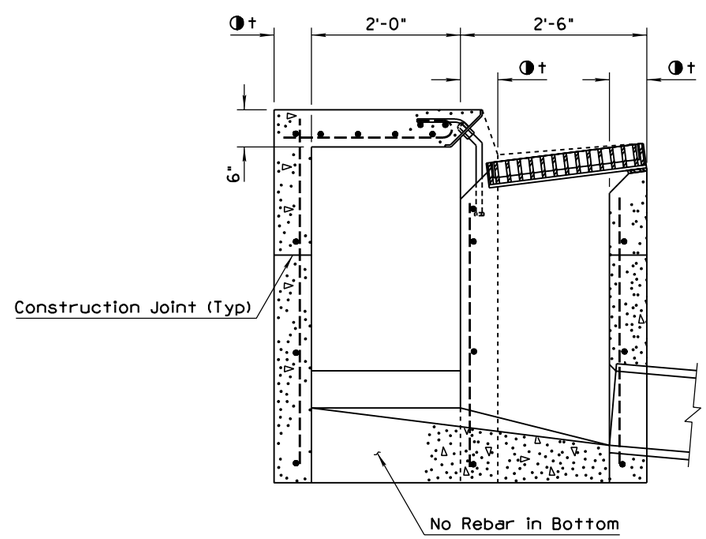

SECTION B-B

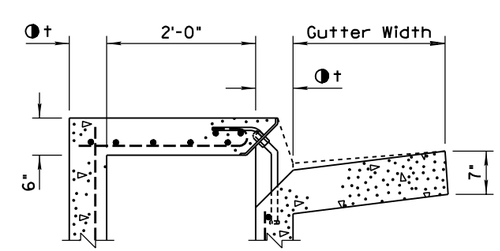

SECTION D-D

APPROVED FOR DESIGN	STATE OF ARIZONA DEPARTMENT OF TRANSPORTATION ROADWAY STANDARD DRAWINGS	REV.
APPROVED FOR DISTRIBUTION	CATCH BASIN TYPE 5	DRAWING NO. C-15.40 Sheet 1 of 2

NO	DESCRIPTION OF REVISIONS	MADE BY	DATE
1			
2			
3			
4			

GENERAL NOTES

1. See Sheet 1 of 2 for other dimensions, notes and rebar.
2. ◑t = 6" when H is 8' or less
   8" when H is greater than 8'

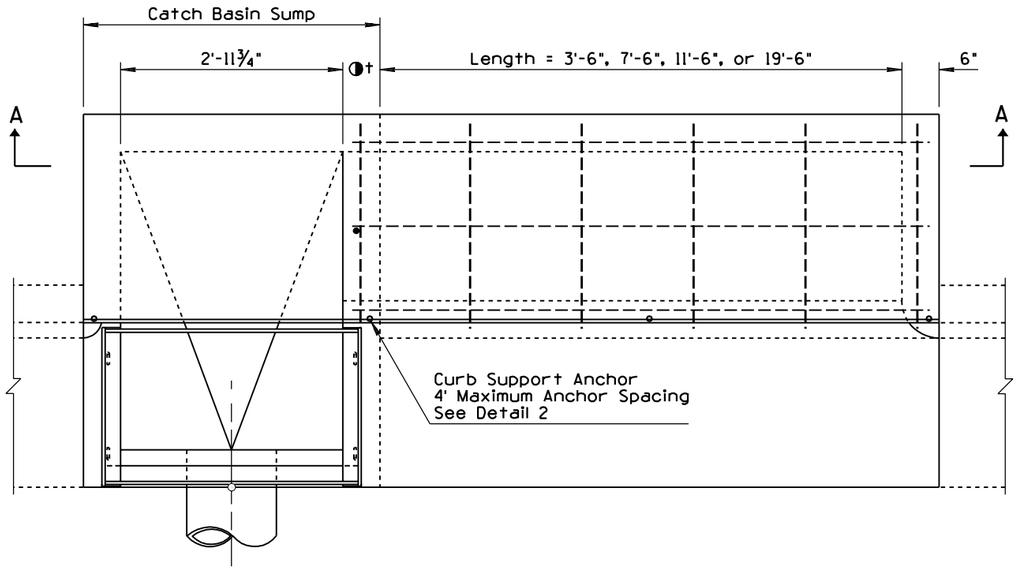

PLAN

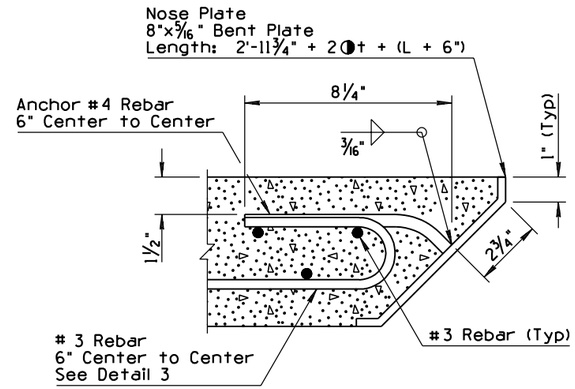

DETAIL 1

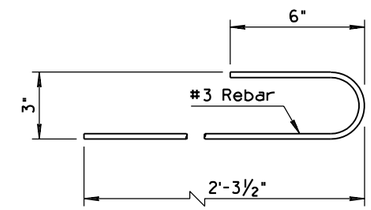

DETAIL 3

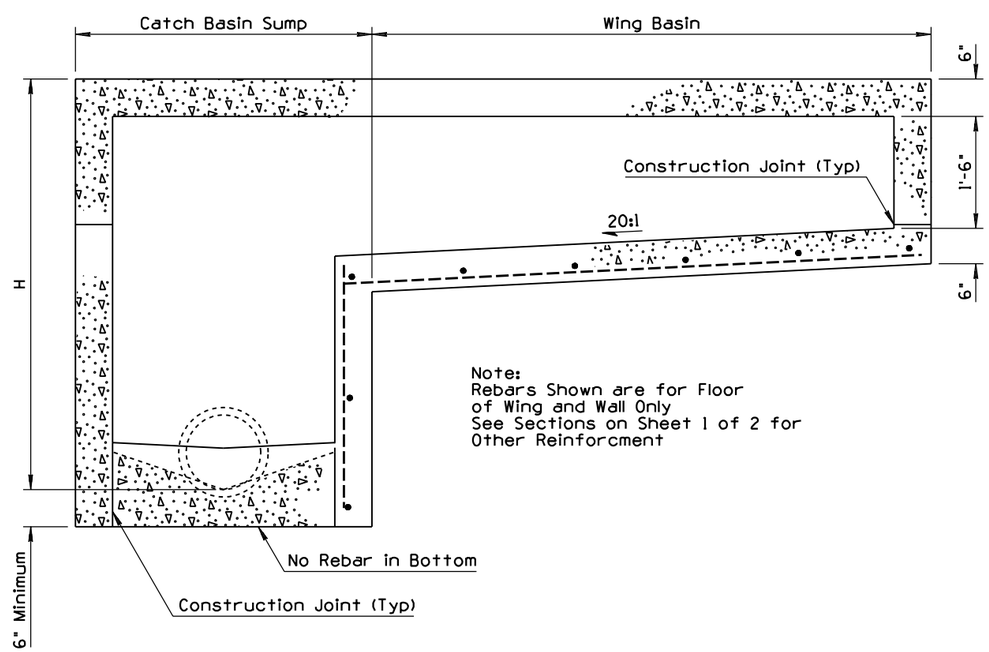

SECTION A-A
USE THIS SECTION WHEN H IS GREATER THAN 5'

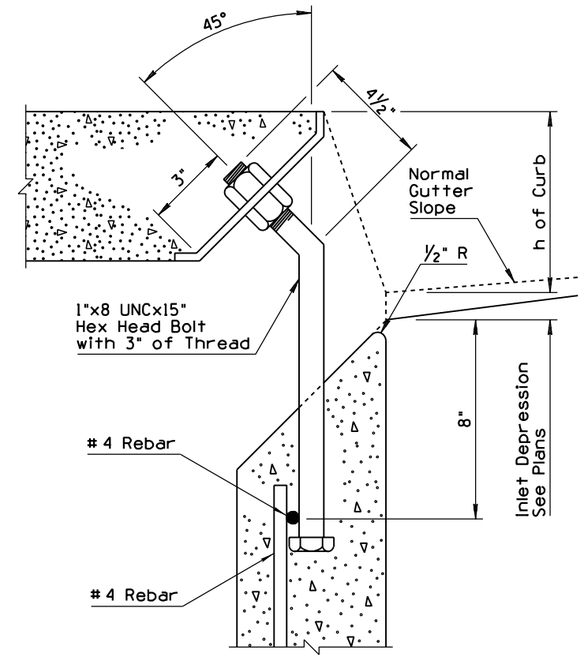

DETAIL 2
CURB SUPPORT ANCHOR

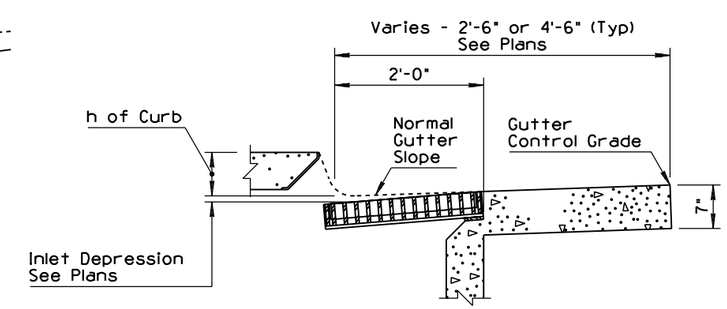

DETAIL 4

APPROVED FOR DESIGN	STATE OF ARIZONA DEPARTMENT OF TRANSPORTATION ROADWAY STANDARD DRAWINGS	REV. 5/97
APPROVED FOR DISTRIBUTION	CATCH BASIN TYPE 5	DRAWING NO. C-15.40 Sheet 2 of 2

NO	DESCRIPTION OF REVISIONS	MADE BY	DATE
1	REVISED GRATE DIMENSIONS AND REISSUED STANDARD	RT/RLF	7/01
2			
3			
4			

GENERAL NOTES

1. Grating units and frames shall be fabricated from structural steel ASTM A36 except as noted.
2. All welding shall be in accordance with Std Spec 604-3.06.
3. The completed assembly shall be given one shop coat of Number 1 paint.
4. Frames and grates shall fit to a maximum rock of 3/32" at any point.
5. Grate opening is 3.60 Sq Ft.
6. Bracing of frame is recommended for handling and placement purposes.
7. Frame and Grate to be used with Std Dwgs C-15.10, C-15.30 and C-15.40 .
8. Grate may be used with Std Dwg C-15.92 Frame.

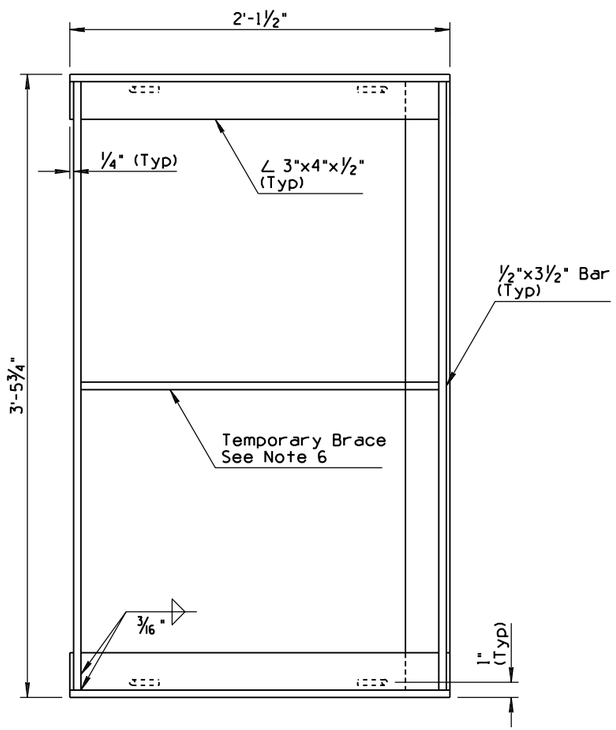

PLAN

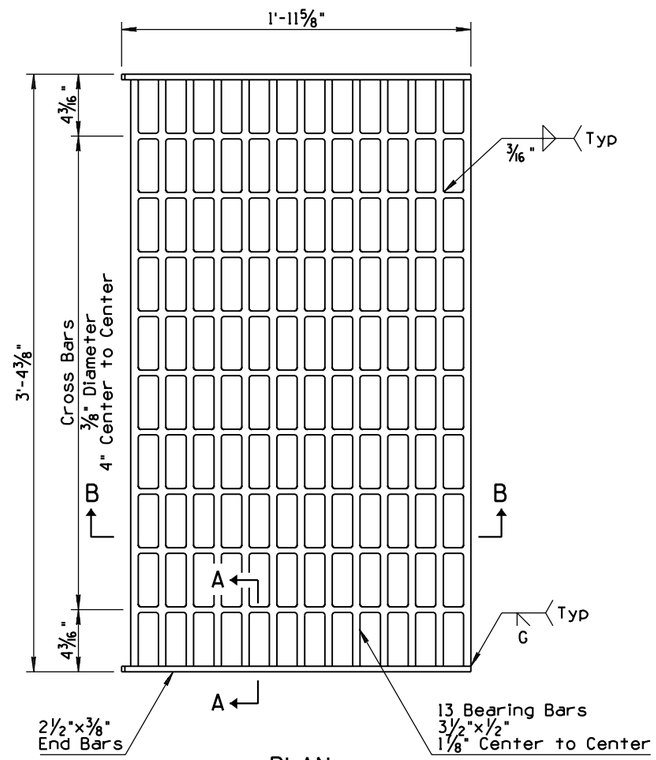

PLAN

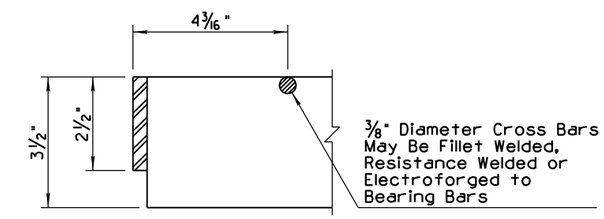

SECTION A-A

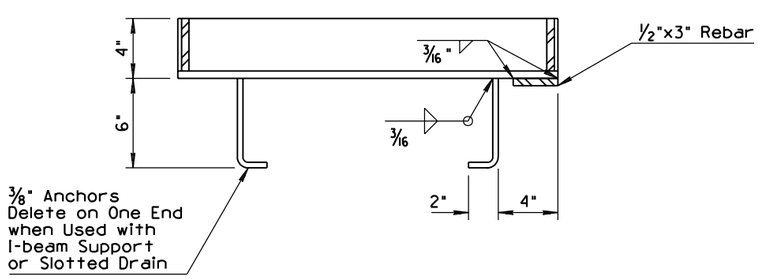

SECTION
FRAME

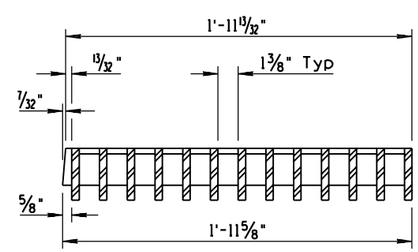

SECTION B-B
GRATE

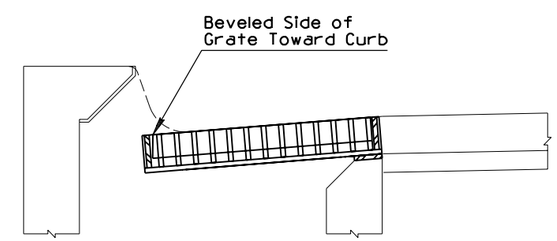

TYPICAL INSTALLATION

C-15.10 Catch Basin Shown
Similar for C-15.30 and C-15.40

①

APPROVED FOR DESIGN	STATE OF ARIZONA DEPARTMENT OF TRANSPORTATION ROADWAY STANDARD DRAWINGS	REV. 7/01
APPROVED FOR DISTRIBUTION	CATCH BASIN FRAME AND GRATE	DRAWING NO. C-15.50

NO	DESCRIPTION OF REVISIONS	MADE BY	DATE
1	REISSUED STANDARD DRAWING	RLF	9/04
2			
3			
4			

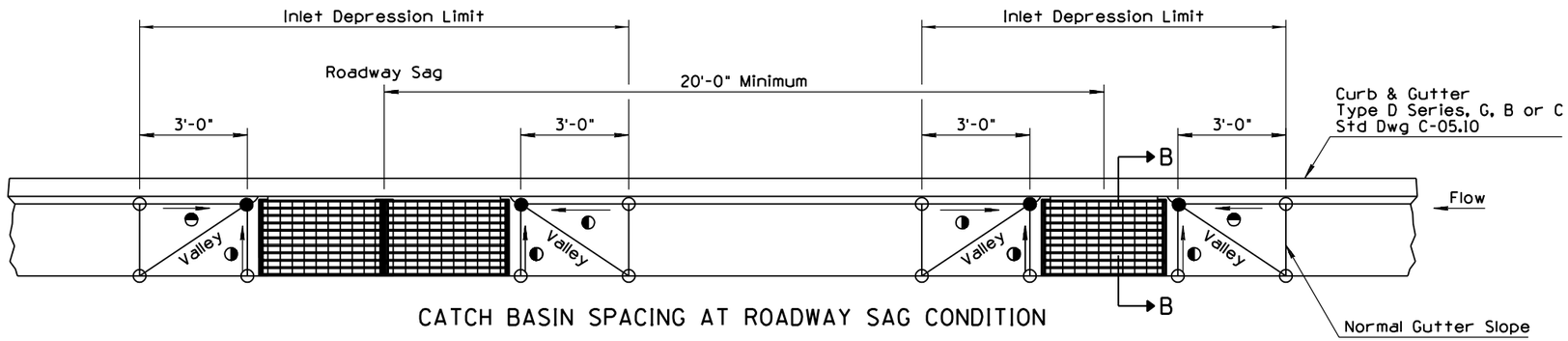

CATCH BASIN SPACING AT ROADWAY SAG CONDITION

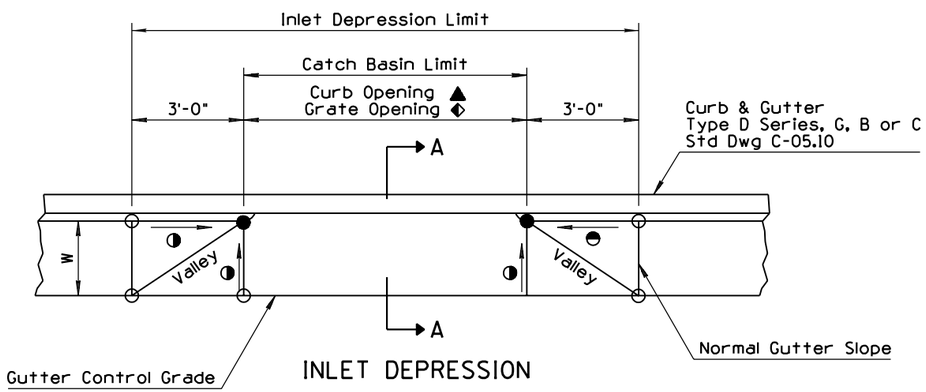

INLET DEPRESSION

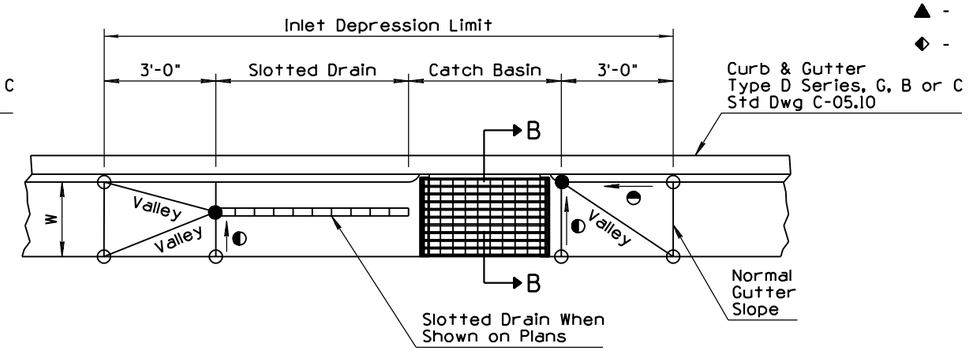

INLET DEPRESSION
CATCH BASIN WITH SLOTTED DRAIN

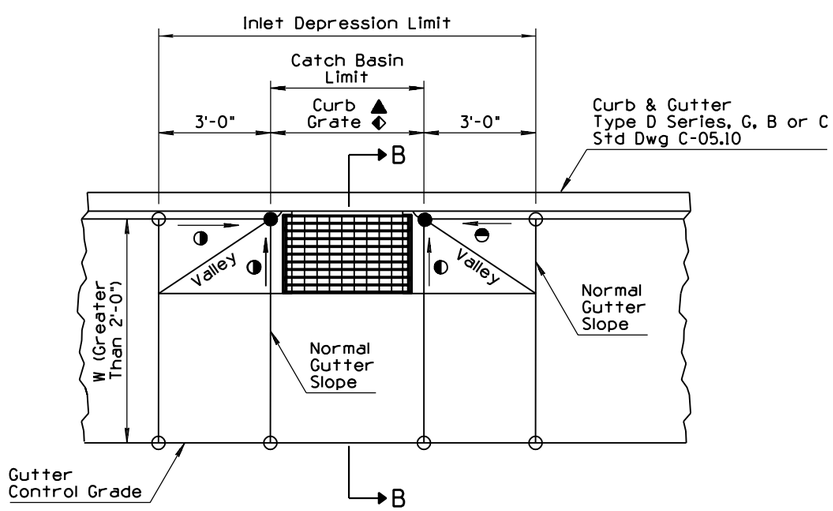

INLET DEPRESSION
CATCH BASIN WITH WIDE GUTTER

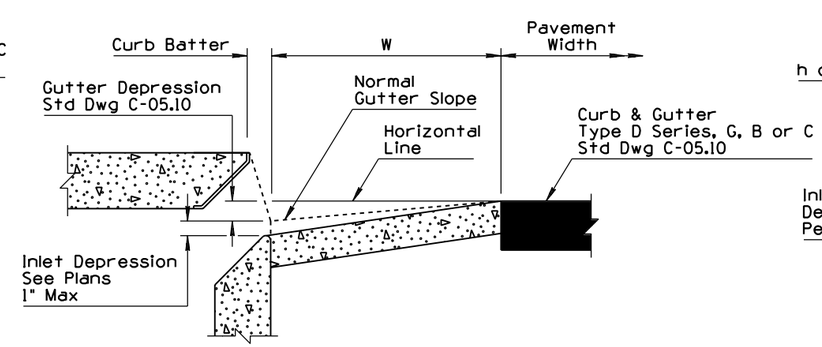

SECTION A-A
(Type D Curb & Gutter Shown)

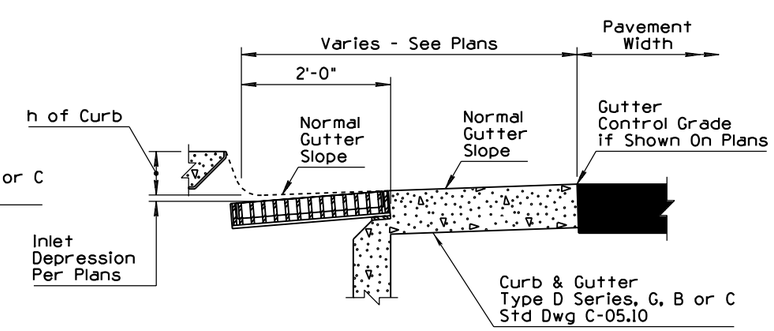

SECTION B-B
(Type D Curb & Gutter Shown)

GENERAL NOTES

1. No inlet depression shall extend into a traffic lane.
2. Maximum combined inlet and gutter depression is 3". See Section A-A.
3. Maximum distance along curb between catch basins where full gutter depression is used is 10'.
4. See Std Dwg C-15.80 for aprons used with Std Dwg C-15.80 Catch Basin.

LEGEND

- ○ - Normal pavement or gutter flow line elevation.
- ● - Depressed elevation.
- ◒ - Straight grade with downward slope.
- W - Normal gutter width per Std Dwg C-05.10.
- ▲ - For Types 1, 3, & 5 Catch Basin.
- ◆ - For Type 4 Catch Basin & Std Dwg C-15.91.

APPROVED FOR DESIGN	STATE OF ARIZONA DEPARTMENT OF TRANSPORTATION ROADWAY STANDARD DRAWINGS	REV. 9/04
APPROVED FOR DISTRIBUTION	CATCH BASIN MISCELLANEOUS DETAILS	DRAWING NO. C-15.70 (1) Sheet 1 of 2

NO	DESCRIPTION OF REVISIONS	MADE BY	DATE
1	REMOVED CMP DESIGNATION	RLF	9/04
2	ADDED NOTE	RLF	9/04
3			
4			

GENERAL NOTES

1. Construction drain may be deleted at the option of the Engineer.

LEGEND

○ - Normal pavement or gutter flow line elevation.

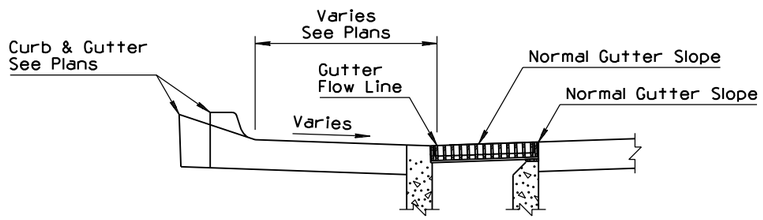

SECTION

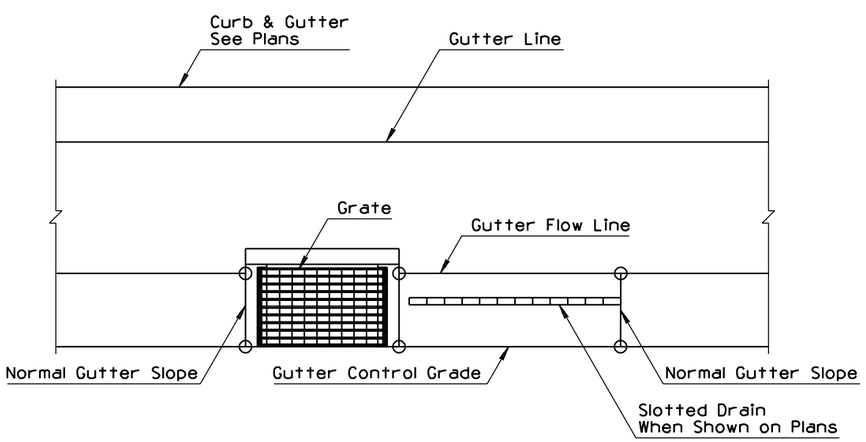

TYPE 4 CATCH BASIN WITHOUT CURB

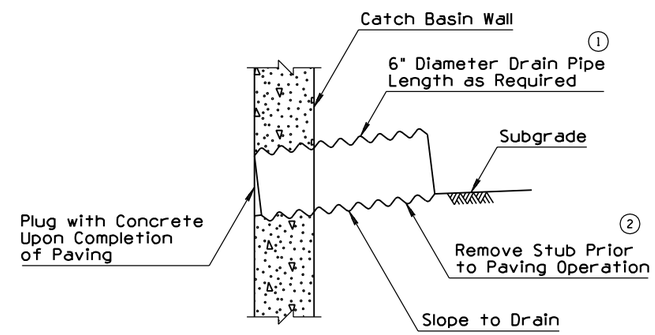

CATCH BASIN CONSTRUCTION DRAIN

APPROVED FOR DESIGN	STATE OF ARIZONA DEPARTMENT OF TRANSPORTATION ROADWAY STANDARD DRAWINGS	REV.
APPROVED FOR DISTRIBUTION	CATCH BASIN MISCELLANEOUS DETAILS	DRAWING NO. C-15.70 Sheet 2 of 2

NO	DESCRIPTION OF REVISIONS	MADE BY	DATE
1	REVISED TABLE MEASUREMENT FORMAT	RLF	9/04
2			
3			
4			

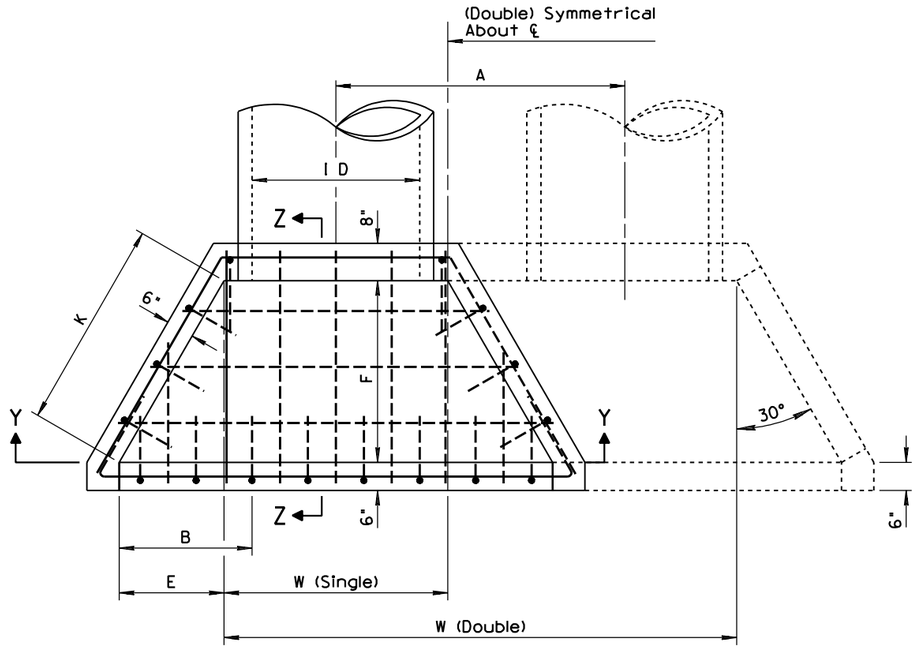

PLAN

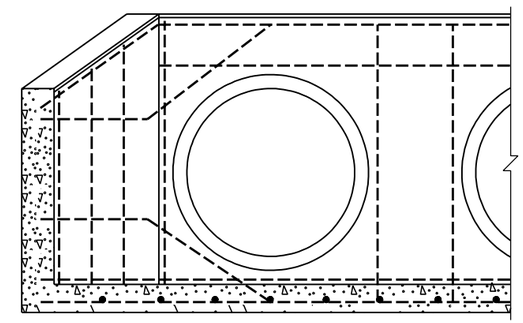

SECTION Y-Y

GENERAL NOTES

1. See also Std Dwg C-13.10.
2. High point of headwall shall not project more than 3" above slope.
3. All concrete shall be Class B.
4. All rebar shall be #4, 1'-0" center to center, with 3" minimum clear to inside of walls and floor.

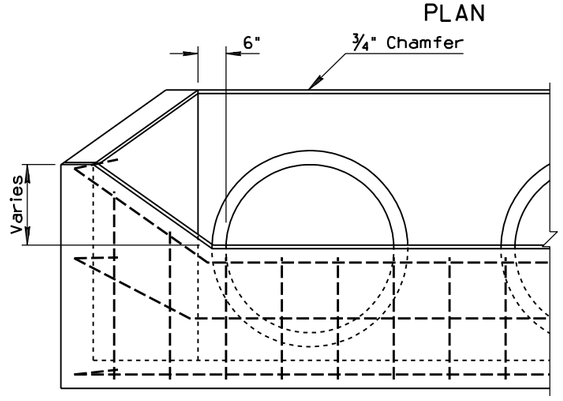

ELEVATION

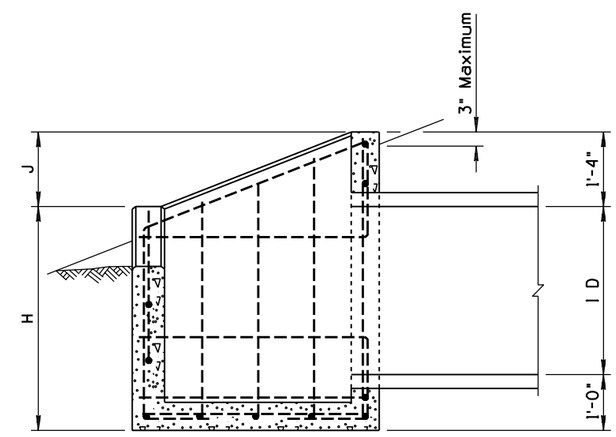

SECTION Z-Z

①

PIPE	DIMENSIONS (Ft-In)									QUANTITIES (Based on CMP Installation)			
ID (In)	W		A	B	E	F	H	J	K	Concrete (CY)		Reinforcing Steel (Lbs)	
	Single	Double								Single	Double	Single	Double
18	2 -6	5 -2	2 -8	1 -3	0-9	1 -3⅝	3 -1	0-9	1 -6	0.7	1.1	75	105
24	3 -0	6 -6	3 -6	1 -7½	1 -1½	1 -11⅜	3 -5	0-11	2 -3	1.0	1.6	90	135
30	3 -6	7 -10	4 -4	2 -0	1 -6	2 -7¼	3 -9	1 -1	3 -0	1.5	2.3	110	165
36	4 -0	9 -2	5 -2	2 -4½	1 -10½	3 -3	4 -0	1 -4	3 -9	2.0	3.0	145	215
42	4 -6	10 -6	6 -0	2 -9	2 -3	3 -10¾	4 -4	1 -6	4 -6	2.5	3.8	190	280

APPROVED FOR DESIGN	STATE OF ARIZONA DEPARTMENT OF TRANSPORTATION ROADWAY STANDARD DRAWINGS	REV.
Mary Vipaina		9/04
APPROVED FOR DISTRIBUTION	CATCH BASIN DROP INLET	DRAWING NO.
Julie Everett		C-15.75

NO	DESCRIPTION OF REVISIONS	MADE BY	DATE
1	REVISED CLEAR COVER	RLF	9/04
2	REVISED THICKNESS SPECIFICATION	RLF	9/04
3	ADDED CONCRETE REQUIREMENT	RLF	9/04
4			

GENERAL NOTES

1. All concrete shall be Class B.
2. Grate and frame shall be fabricated of structural steel in accordance with ASTM A36.
3. All welding shall be in accordance with Std Spec 604-3.06.
4. Grate assembly shall be given one shop coat of Number 1 paint.

▲ Apron slopes shall match the natural flow line of the ditch. No additional depression will be allowed.

(2) ◑t = 6" when H is 8' or less
8" when H is greater than 8'

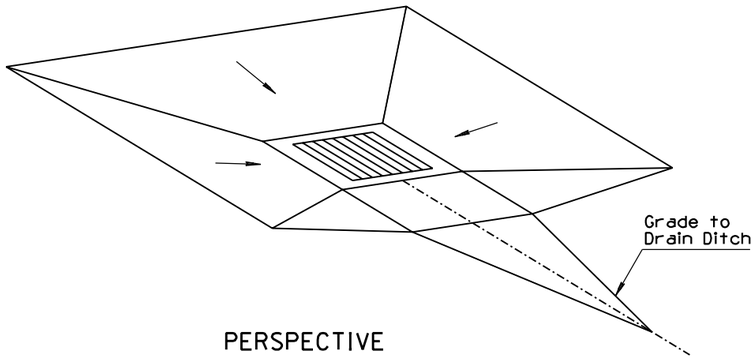

PERSPECTIVE

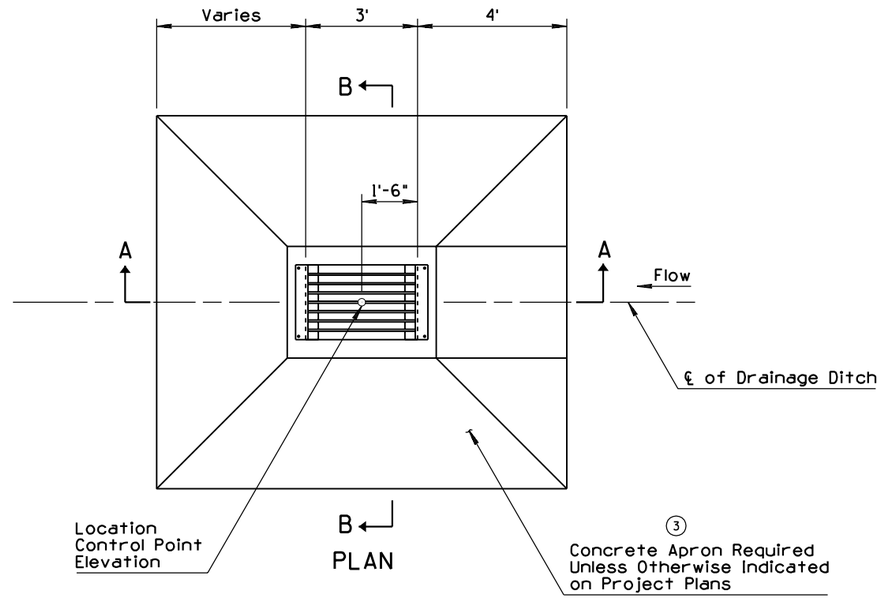

PLAN

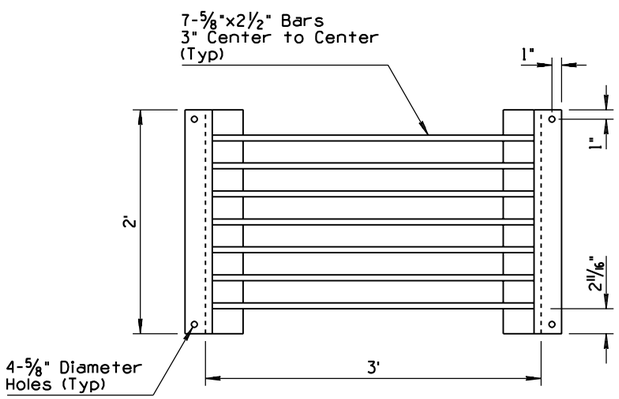

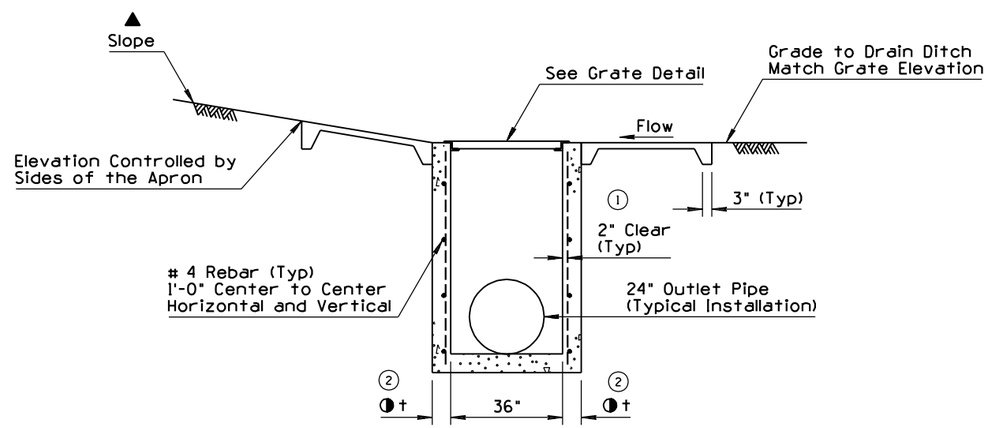

SECTION A-A

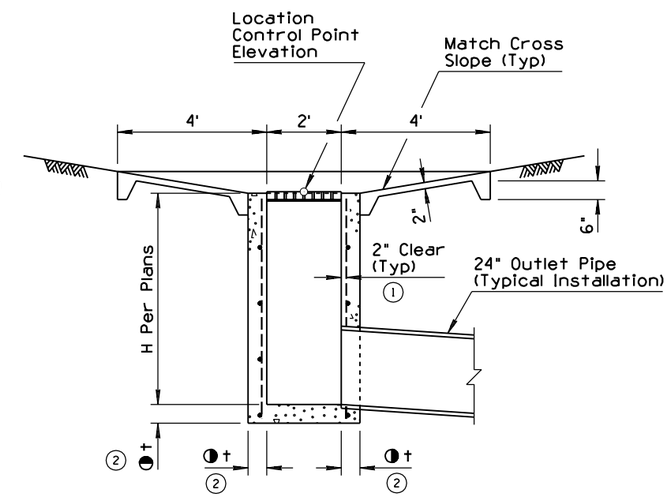

SECTION B-B

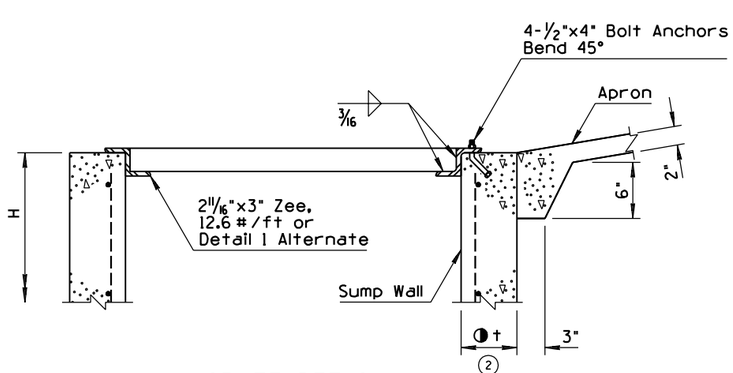

GRATE DETAIL

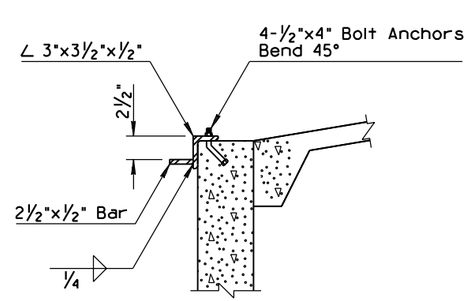

DETAIL 1

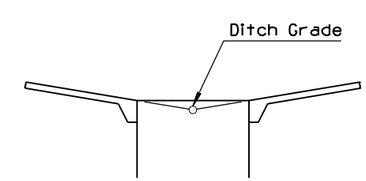

DITCH GRADE DETAIL

APPROVED FOR DESIGN	STATE OF ARIZONA DEPARTMENT OF TRANSPORTATION ROADWAY STANDARD DRAWINGS	REV.
Mary Viparina		9/04
APPROVED FOR DISTRIBUTION	CATCH BASIN FLUSH	DRAWING NO.
		C-15.80

NO	DESCRIPTION OF REVISIONS	MADE BY	DATE
1	REVISED CLEAR COVER	RLF	9/04
2	REVISED THICKNESS SPECIFICATION	RLF	9/04
3	ADDED CONCRETE REQUIREMENT	RLF	9/04
4			

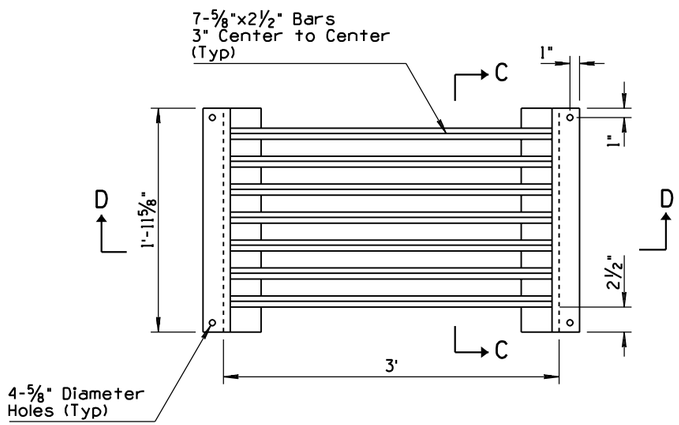

GRATE DETAIL

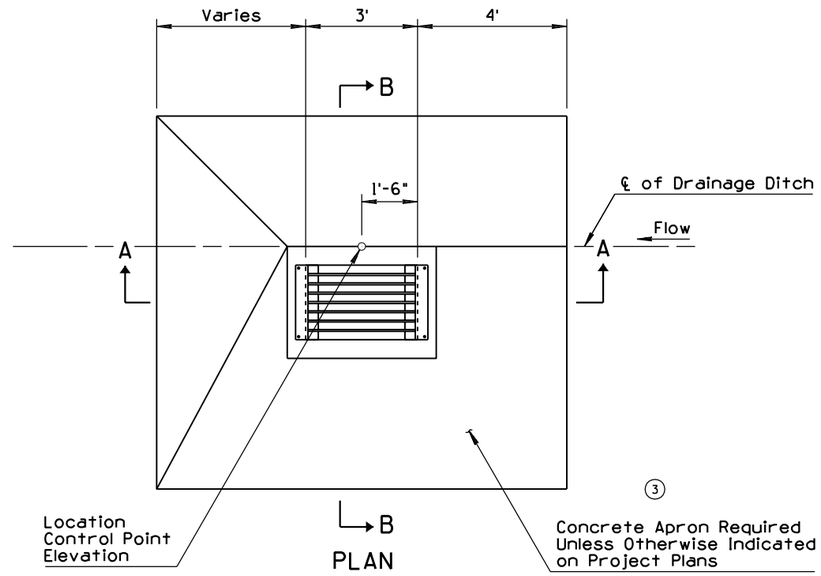

PLAN

GENERAL NOTES

1. All concrete shall be Class B.
2. Grate and frame shall be fabricated of structural steel in accordance with ASTM A36.
3. All welding shall be in accordance with Std Spec 604-3.06.
4. Grate assembly shall be given one shop coat of Number 1 paint.

▲ Apron slopes shall match the natural flow line of the ditch. No additional depression will be allowed.

2 ◑t = 6" when H is 8' or less
8" when H is greater than 8'

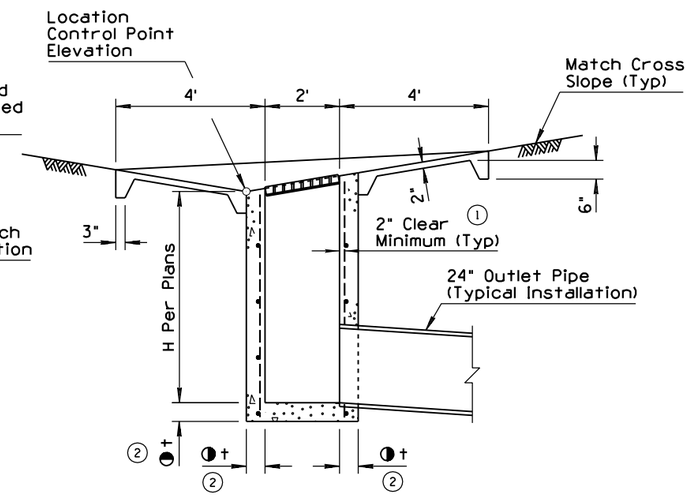

SECTION B-B

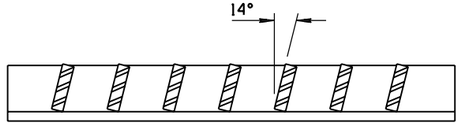

SECTION C-C

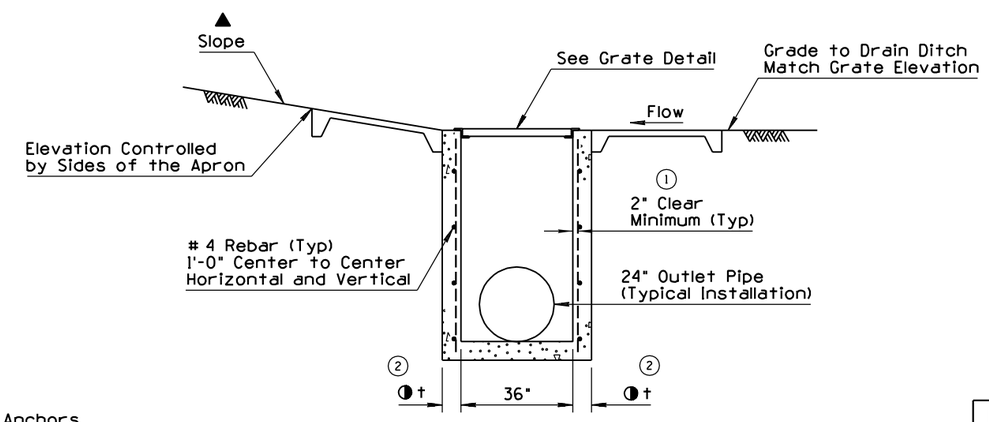

SECTION A-A

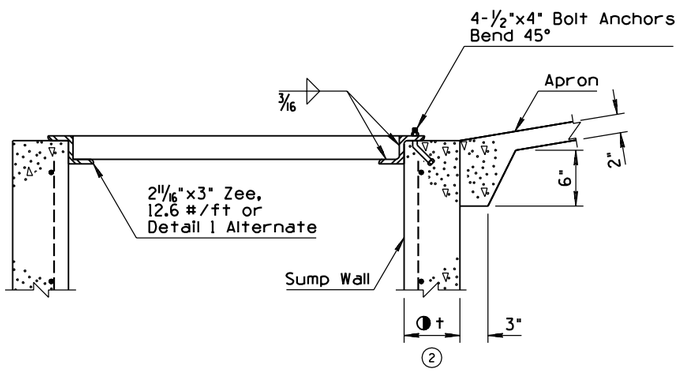

SECTION D-D

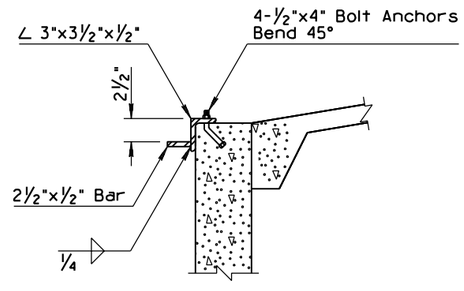

DETAIL 1

DIMENSION TABLE	
Slope	A (In)
10:1	3.6
8:1	4.5
6:1	6
4:1	9

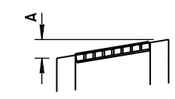

WALL HEIGHT DETAIL

APPROVED FOR DESIGN	STATE OF ARIZONA DEPARTMENT OF TRANSPORTATION ROADWAY STANDARD DRAWINGS	REV.
		9/04
APPROVED FOR DISTRIBUTION	CATCH BASIN SIDE SLOPE	DRAWING NO.
		C-15.81

NO	DESCRIPTION OF REVISIONS	MADE BY	DATE
1			
2			
3			
4			

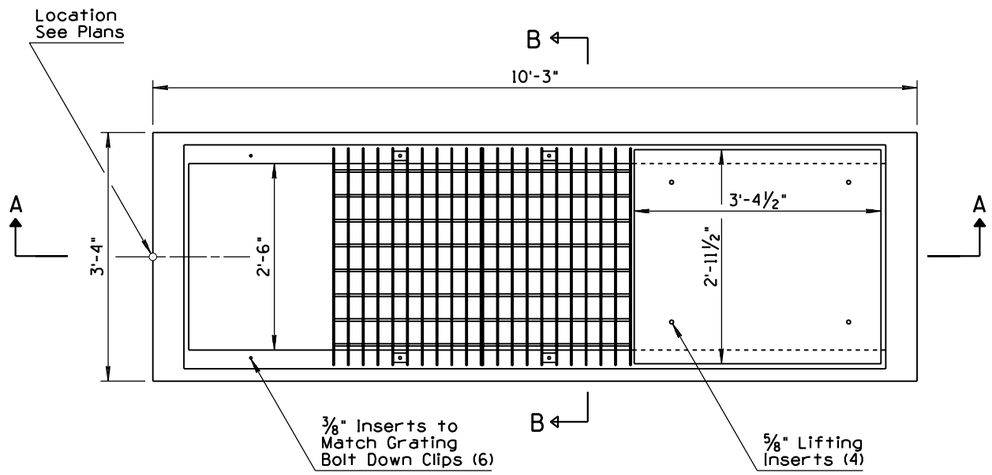

PLAN

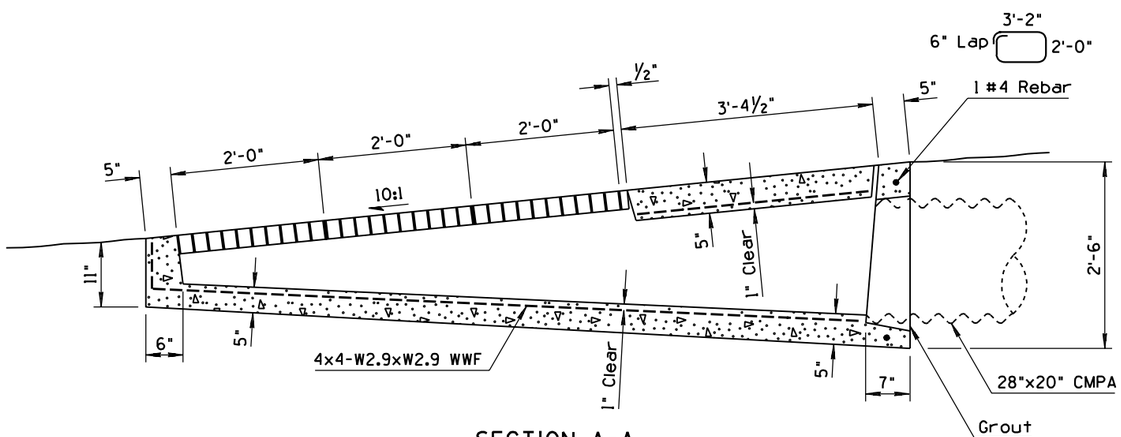

SECTION A-A

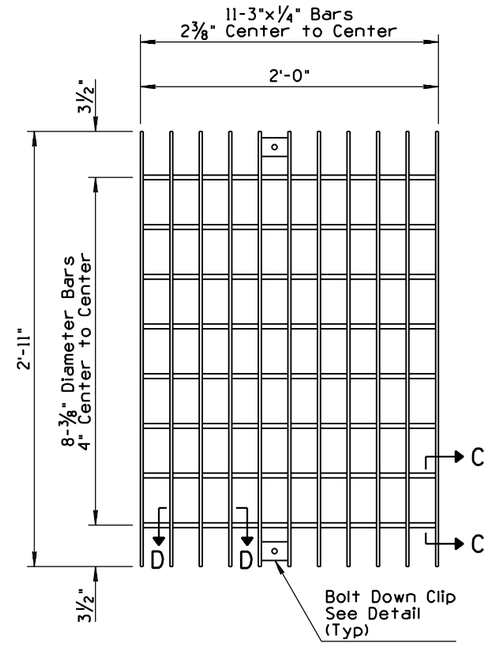

PLAN

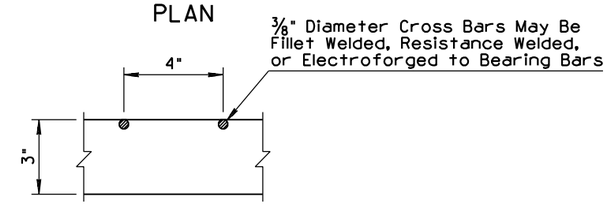

SECTION C-C

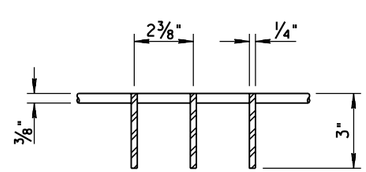

SECTION D-D

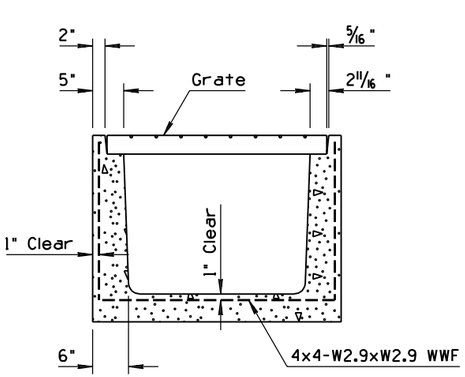

SECTION B-B

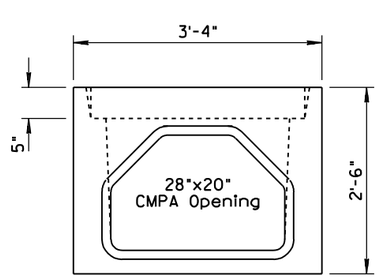

END VIEW

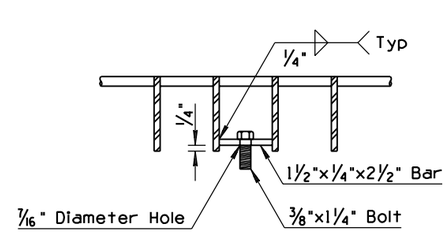

BOLT DOWN CLIP DETAIL

GENERAL NOTES

1. Concrete shall conform to the requirements for Class S Concrete. The minimum strength shall be 4000 psi.
2. Grout shall be in accordance with the Std Specs except water content shall be such that the consistency is proper for smooth trowling.
3. All welding shall be in accordance with Std Spec 604-3.06.
4. The completed grate shall be given one shop coat of Number 1 paint.
5. Foundation soil and backfill shall be in accordance with Std Spec 203-5.

APPROVED FOR DESIGN	STATE OF ARIZONA DEPARTMENT OF TRANSPORTATION ROADWAY STANDARD DRAWINGS	REV.
		9/04
APPROVED FOR DISTRIBUTION	CATCH BASIN MEDIAN DIKE PRECAST	DRAWING NO.
		C-15.90

NO	DESCRIPTION OF REVISIONS	MADE BY	DATE
1	DELETED PREVIOUS GENERAL NOTE# 2	RLF	7/01
2	REVISED THICKNESS SPECIFICATION	RLF	9/04
3			
4			

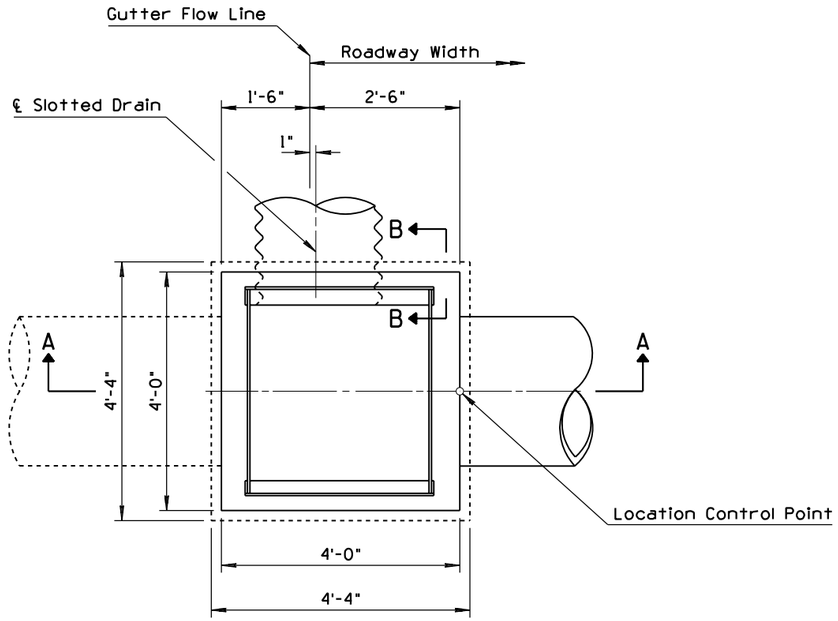

PLAN

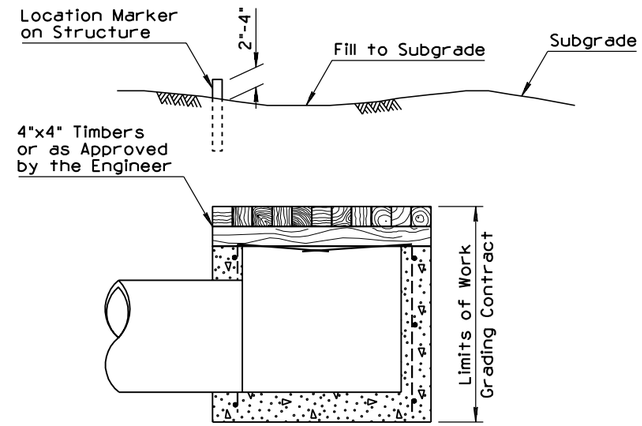

NOTE:
Bend Rebars and Cover with
Two Layers of 4"x4" Timbers

TEMPORARY TIMBER CAP DETAIL

GENERAL NOTES

1. All concrete shall be Class B.
2. (1) All rebar shall have 2" minimum clear cover unless otherwise noted.
3. # 4 rebar shall be placed 12" center to center horizontal & vertical in walls.
4. Pipe may be placed in any wall.
5. See Std Dwgs C-13.60 and C-13.65 for more information and dimensions of slotted drains.

▲ Includes 1" Inlet Depression

(2) ◑t = 6" when H is 8' or less
8" when H is greater than 8'

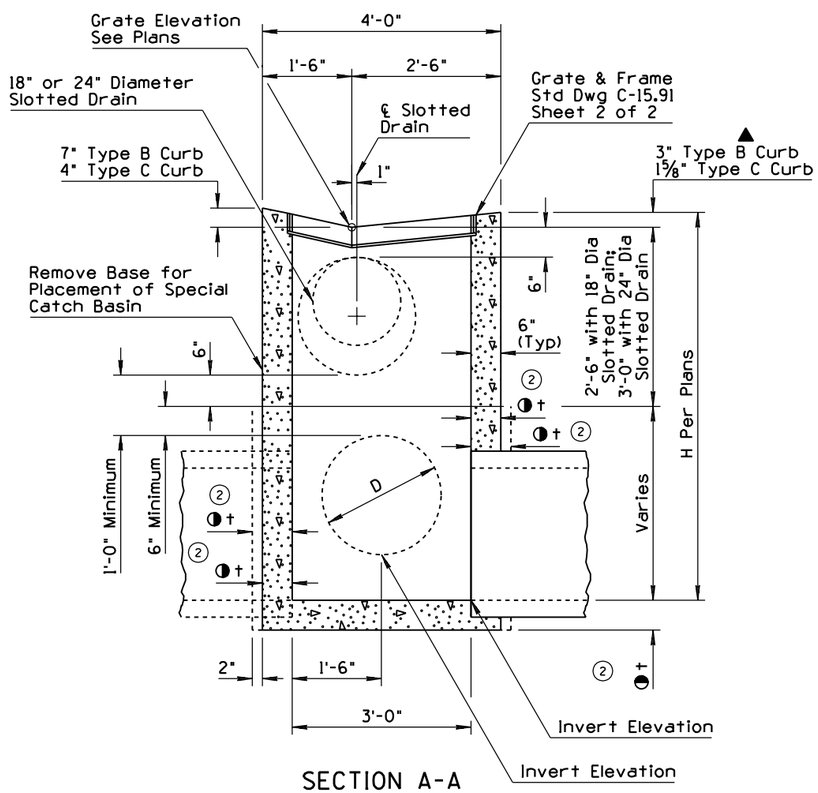

SECTION A-A

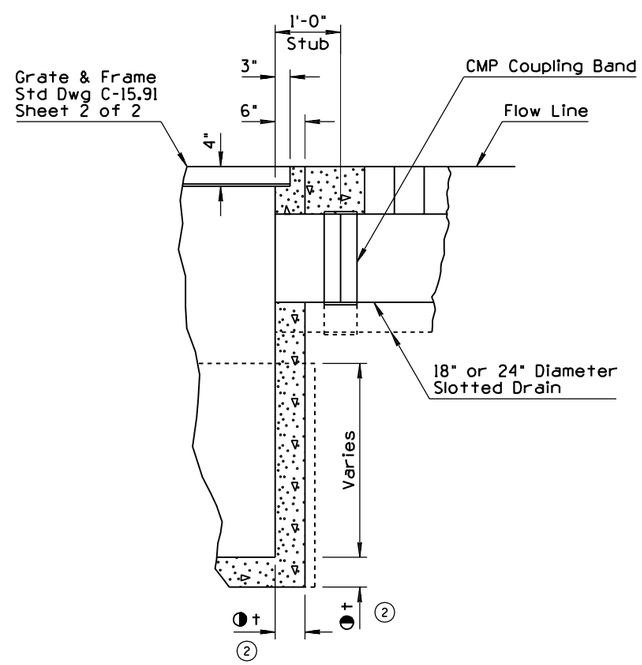

SECTION B-B

APPROVED FOR DESIGN	STATE OF ARIZONA DEPARTMENT OF TRANSPORTATION ROADWAY STANDARD DRAWINGS	REV. 7/01
APPROVED FOR DISTRIBUTION	FREEWAY CATCH BASIN DETAILS	DRAWING NO. C-15.91 Sheet 1 of 2

NO	DESCRIPTION OF REVISIONS	MADE BY	DATE
1	REVISED CONCRETE ANCHOR STUD LENGTH	RLF	9/04
2	REARRANGED GENERAL NOTES	RLF	9/04
3			
4			

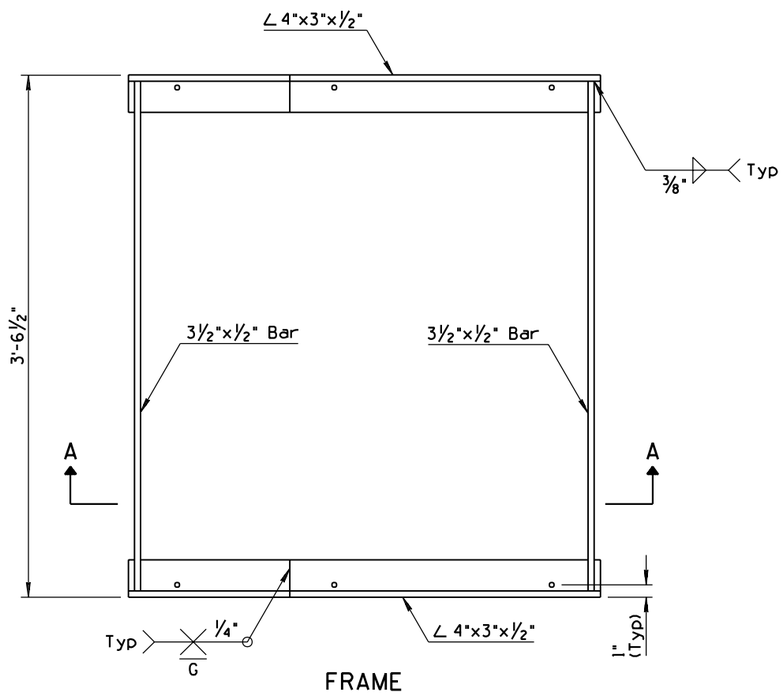

FRAME
PLAN VIEW

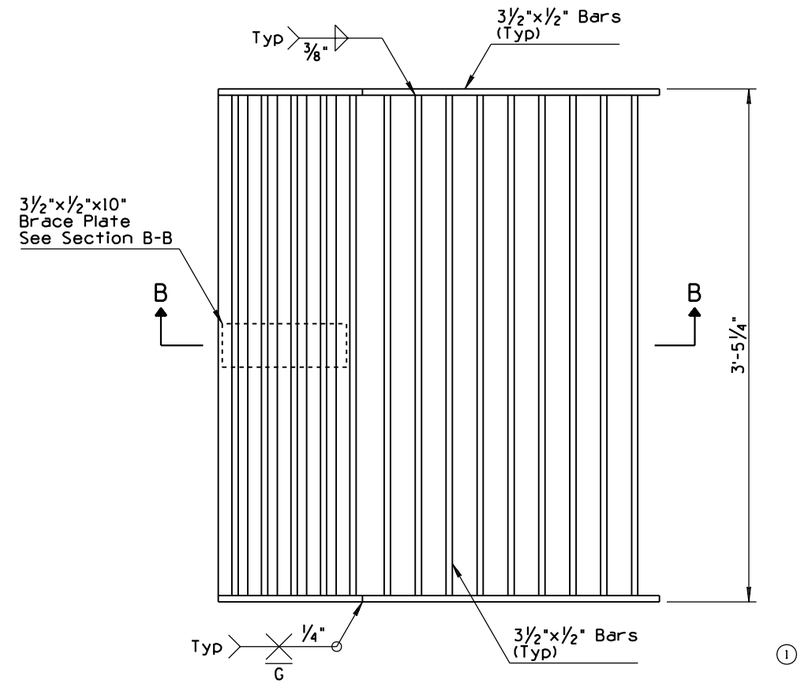

GRATE
PLAN VIEW

GENERAL NOTES

1. All structural steel shall be in accordance with ASTM A36.
2. All welding shall be in accordance with Std Spec 604-3.06.
3. The completed grate assembly (frame & grate) shall be given two shop coats of Number 1 paint.

NOTE TO DESIGNERS

Grate design is not suitable for locations subject to bicycle traffic.

GRATE AND FRAME DIMENSIONS						
Type	Curb Height (In)	Gutter Width (Ft-In)	Catch Basin Frame		Catch Basin Grate	
			A (In)	∢	C (In)	∢
B	6	2-6	13 15/16	26°-57'-40"	12 1/16	26°-57'-40"
C	3	2-6	13 5/16	15°-37'-45"	11 7/8	15°-37'-45"

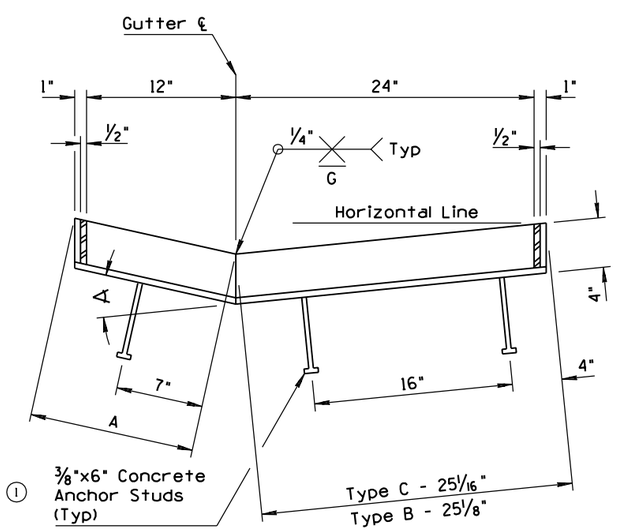

SECTION A-A

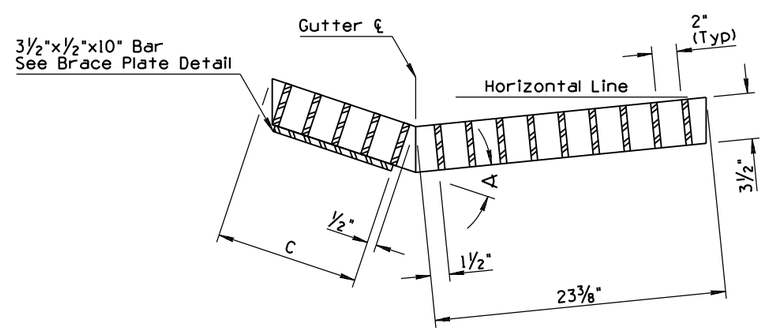

SECTION B-B

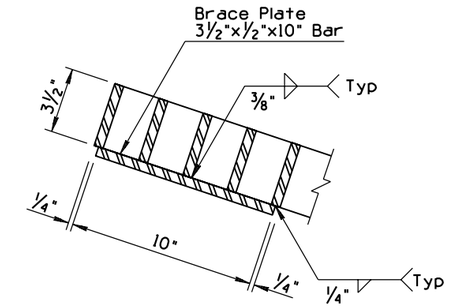

BRACE PLATE DETAIL

APPROVED FOR DESIGN	STATE OF ARIZONA DEPARTMENT OF TRANSPORTATION ROADWAY STANDARD DRAWINGS	REV.
Mary Vipaina		9/04
APPROVED FOR DISTRIBUTION	FREEWAY CATCH BASIN DETAILS	DRAWING NO. C-15.91 Sheet 2 of 2

NO	DESCRIPTION OF REVISIONS	MADE BY	DATE
1	REISSUED STANDARD DRAWING	RLF	9/04
2			
3			
4			

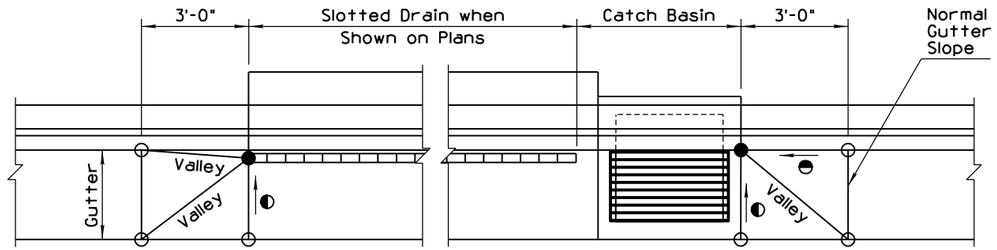

PLAN

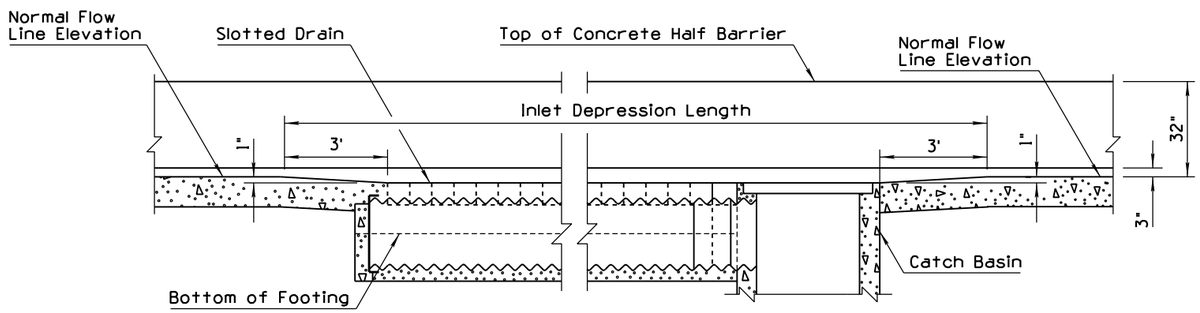

ELEVATION

INLET DEPRESSION
CONCRETE HALF BARRIER AND CATCH BASIN WITH SLOTTED DRAIN
(18" CMP AND 32" CONCRETE BARRIER SHOWN)

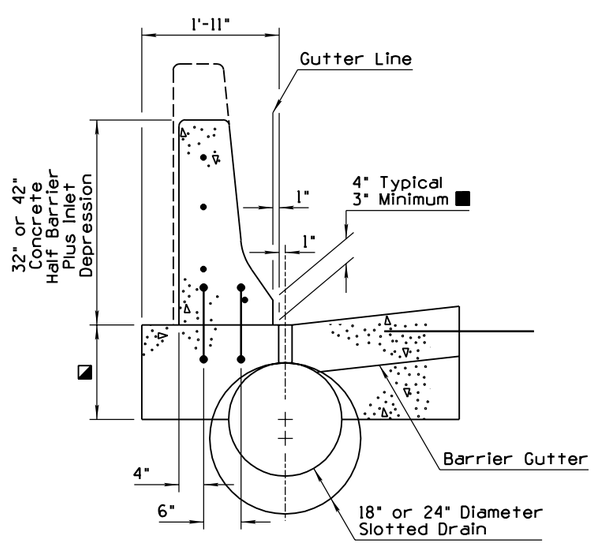

HALF BARRIER INSTALLATION
AT SLOTTED DRAIN LOCATIONS

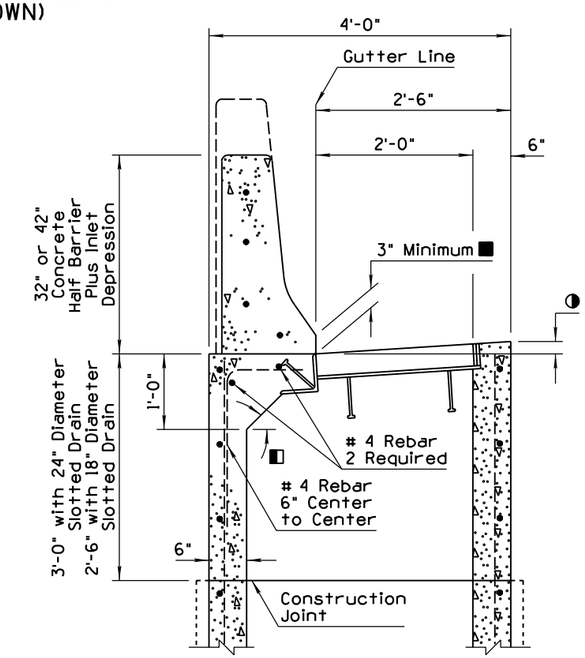

CATCH BASIN WITH HALF BARRIER

GENERAL NOTES

1. See Std Dwg C-15.91 for dimensions, sizes and details not shown for construction of catch basin.
2. See Std Dwgs C-10.52 and C-10.53 for dimensions, sizes and details not shown for construction of barrier.
3. See Std Dwg C-13.60 for dimensions, sizes and details not shown for construction of slotted drain.
4. Only longitudinal reinforcing steel shall be placed in Half Barrier within 1' of catch basin frame. S-shape bars shall not be placed in the rear wall of the catch basin.

◪ 1'-3" for 18" diameter slotted drain
1'-6" for 24" diameter slotted drain

◧ Angle varies, approximately 45°

■ Varies in increased height over catch basin and slotted drain inlet depression

● Depressed elevation.

○ Normal pavement or gutter flow line elevation.

◑ Match adjacent gutter depression. Additional inlet depression as specified

◒ Straight grade with downward slope.

NOTE TO DESIGNERS

Grate design shown is not suitable for locations subject to bicycle traffic. Use Std Dwg C-15.50 grate with Std Dwg C-15.92 frame (Sheet 2 of 2) for locations with bicycle traffic.

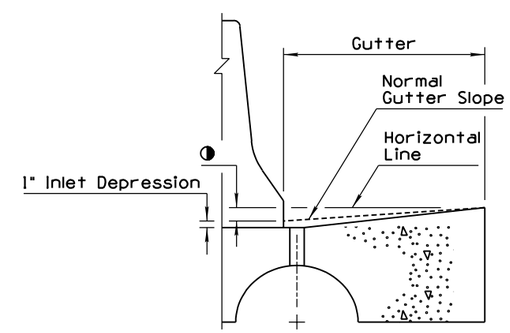

GUTTER DEPRESSION
AT SLOTTED DRAIN LOCATIONS

APPROVED FOR DESIGN	STATE OF ARIZONA DEPARTMENT OF TRANSPORTATION ROADWAY STANDARD DRAWINGS	REV.
Mary Viparina		9/04
APPROVED FOR DISTRIBUTION	CATCH BASIN WITH TYPE 'F' CONCRETE HALF BARRIER	DRAWING NO. 1 C-15.92 Sheet 1 of 2

NO	DESCRIPTION OF REVISIONS	MADE BY	DATE
1	REISSUED STANDARD DRAWING	RLF	9/04
2			
3			
4			

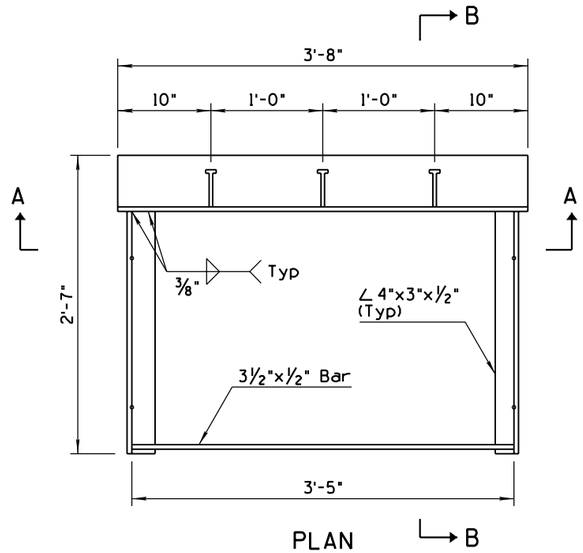

PLAN

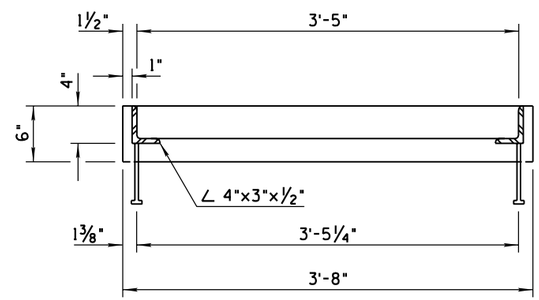

SECTION A-A

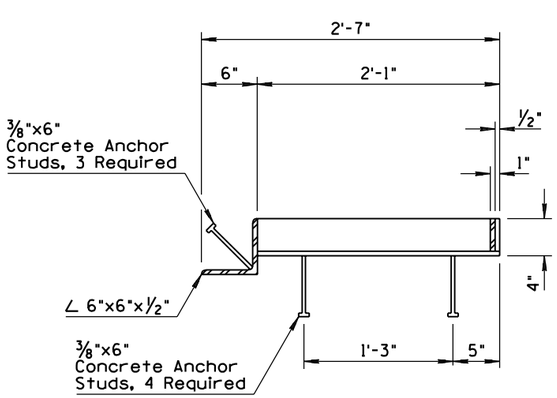

SECTION B-B

FRAME

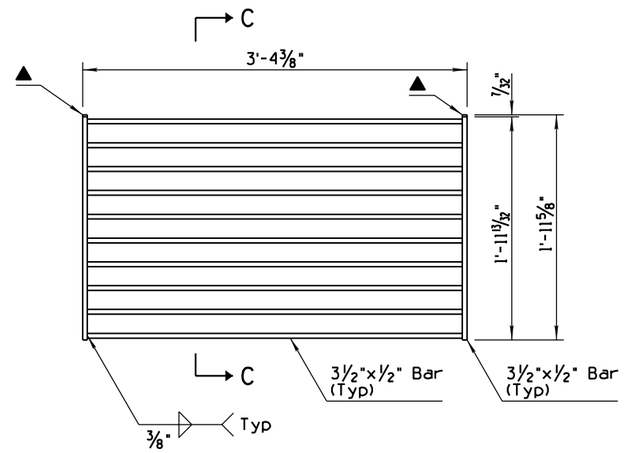

PLAN

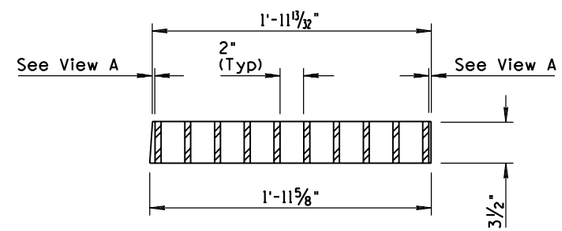

SECTION C-C

GRATE

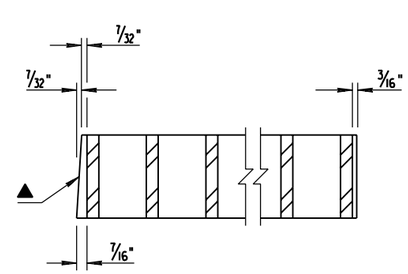

View A

GENERAL NOTES

1. All welding shall be in accordance with Std Spec 604-3.06.
2. Grate opening for grate shown is 4.75 Sq Ft.
3. All welding shall be in accordance with Std Spec 604-3.06.

▲ Beveled side of grate toward barrier

NOTE TO DESIGNERS

Grate design shown is not suitable for locations subject to bicycle traffic. Use Std Dwg C-15.50 grate with Std Dwg C-15.92 frame (Sheet 2 of 2) for locations with bicycle traffic.

APPROVED FOR DESIGN Mary Vipanna	STATE OF ARIZONA DEPARTMENT OF TRANSPORTATION ROADWAY STANDARD DRAWINGS	REV. 9/04
APPROVED FOR DISTRIBUTION [signature]	CATCH BASIN WITH TYPE 'F' CONCRETE HALF BARRIER	DRAWING NO. 1 C-15.92 Sheet 2 of 2

NO	DESCRIPTION OF REVISIONS	MADE BY	DATE
1	REVISED GRAPHICS	RLF	9/04
2			
3			
4			

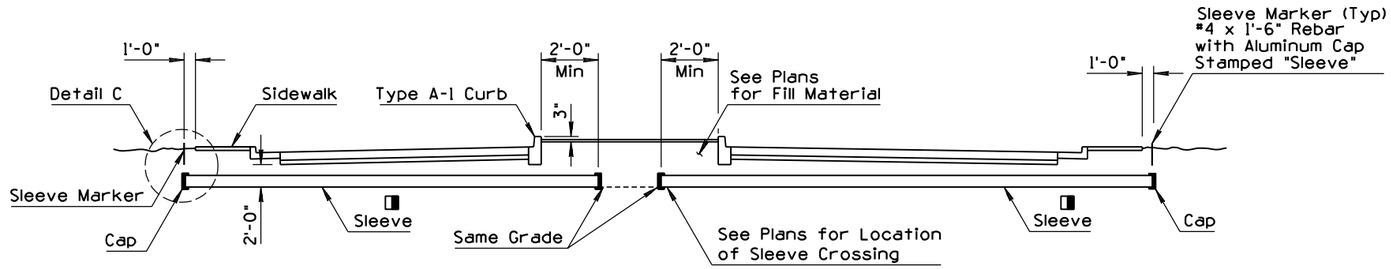

SLEEVE UNDER CROSSROAD

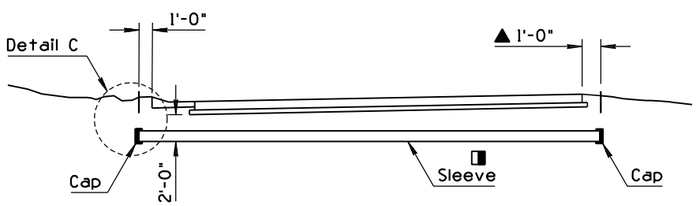

SLEEVE UNDER MAINLINE

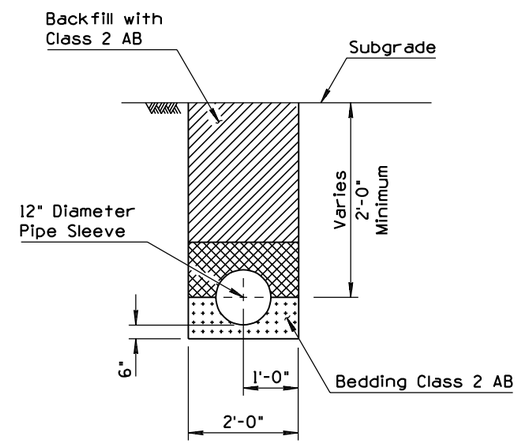

TYPICAL INSTALLATION

①

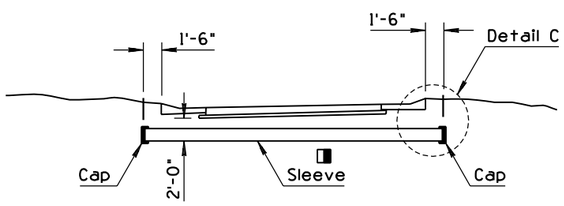

SLEEVE UNDER RAMP

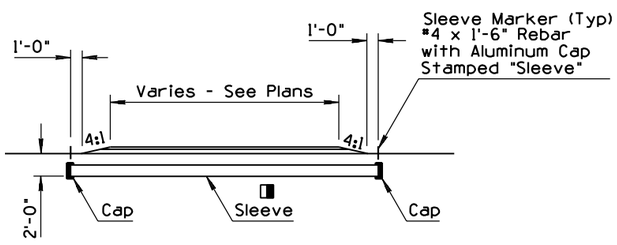

SLEEVE UNDER DRIVEWAYS AND PARKING AREAS

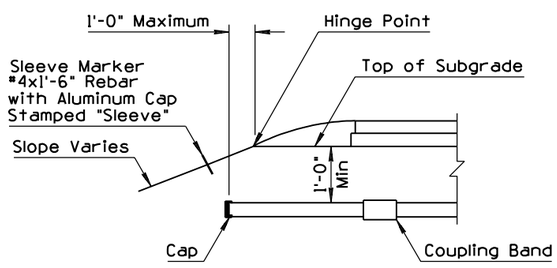

DETAIL C
SLEEVE TERMINATION
AT ELEVATED ROADWAY

GENERAL NOTES

1. Irrigation sleeves shall be installed in a trench condition. See Std Dwg C-13.15.
2. Bedding and backfill material shall be Class 2 AB.
3. Pipe installation shall conform to Section 501 of Std Specs.
4. The contractor shall imprint a 4"± high letter "S" on the face of all curbs at sleeve locations. The width of the letter shall be ½" and shall penetrate the concrete surface ½".
5. For non-continuous sleeves under crossroads, Std Dwg C-05.10 Type "A-1" curb shall be required where median is irrigated. See plans for locations. Dumbell waterstop shall be at all expansion joints.
6. Materials used for caps or plugs shall be as recommended by the pipe supplier and approved by the Engineer.

◨ Sleeves shall be installed parallel to the roadway subgrade. Slope may vary in superelevated sections. Minimum slope nominal to drain.

▲ 2'-0" Back of Curb Median

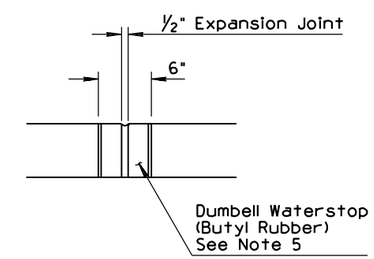

DUMBELL WATERSTOP

APPROVED FOR DESIGN	STATE OF ARIZONA DEPARTMENT OF TRANSPORTATION ROADWAY STANDARD DRAWINGS	REV.
Mary Viparina		9/04
APPROVED FOR DISTRIBUTION	IRRIGATION SLEEVES	DRAWING NO.
Julie Everett		C-16.40

NO	DESCRIPTION OF REVISIONS	MADE BY	DATE
1	REISSUED STANDARD	RLF	9/04
2			
3			
4			

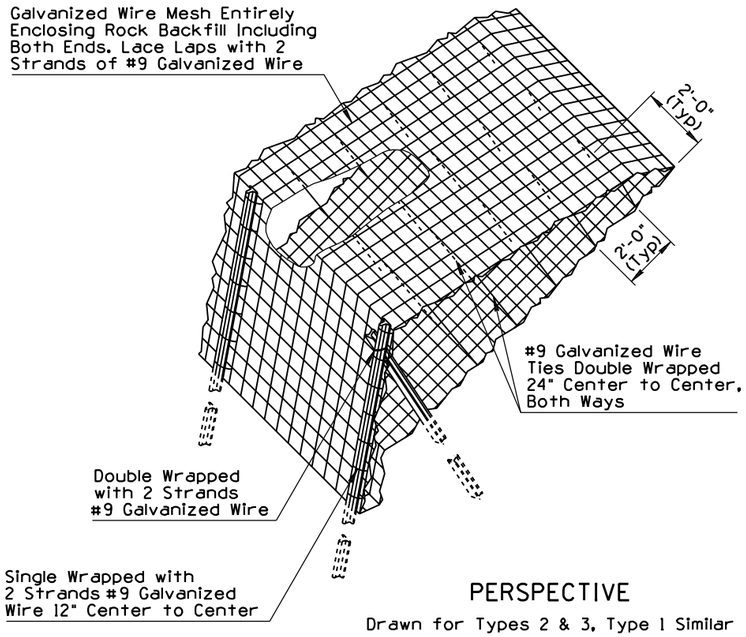

PERSPECTIVE

Drawn for Types 2 & 3, Type 1 Similar

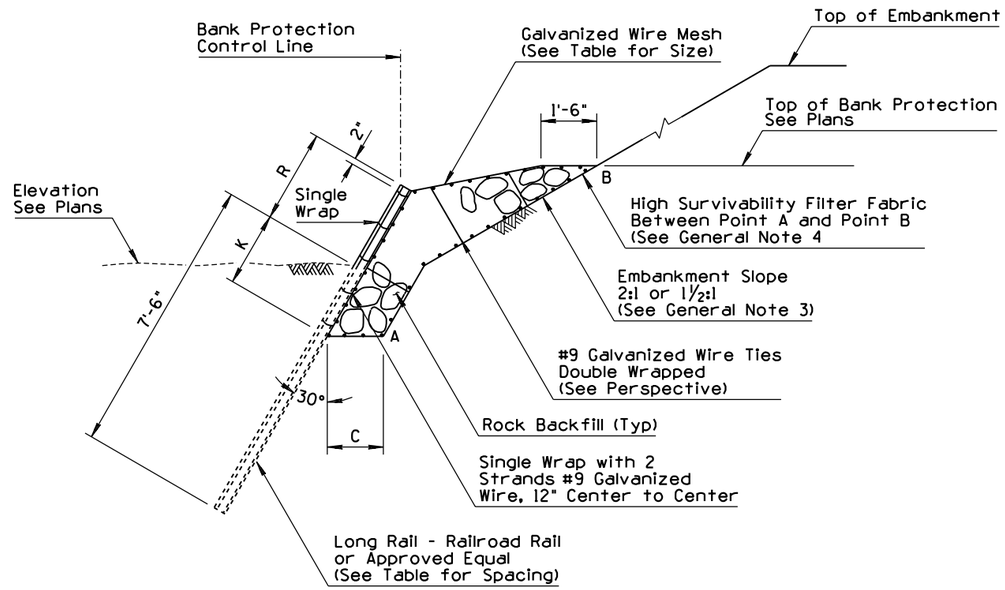

TYPE 1 BANK PROTECTION

GENERAL NOTES

1. Rock shall conform to Std Spec 913-2.01(A). The rock shall have a minimum nominal diameter no smaller than the mesh opening, and a maximum nominal diameter of 12".
2. All mesh wire, tie wire, cable, bolts, washers and nuts shall be galvanized.
3. When other embankment slope rates are encountered, warp to 1½:1 or 2:1.
4. High survivability filter fabric shall conform to Section 913-2.05 of the Standard Specifications.
5. All wire mesh on a single project shall have the same mesh opening.

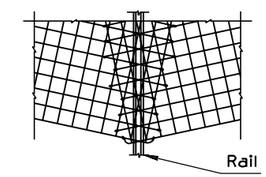

ELEVATION AT CHORD POINT ON CURVE

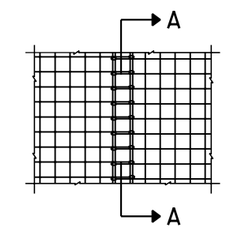

ELEVATION ON STRAIGHT SECTION

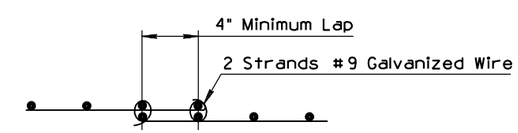

SECTION A - A

WIRE MESH SPLICE DETAILS

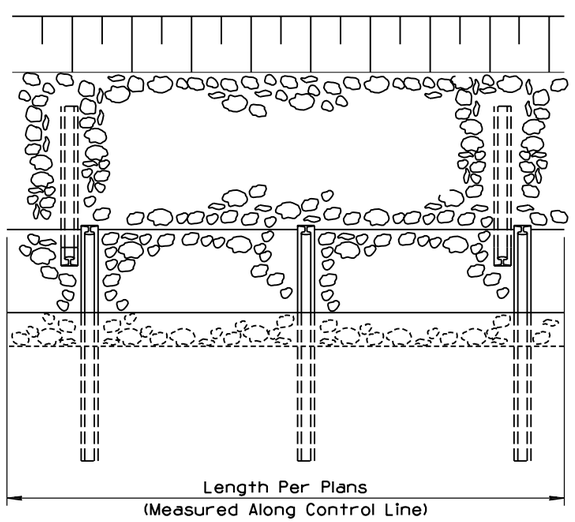

PLAN OF CHANNEL BANK PROTECTION

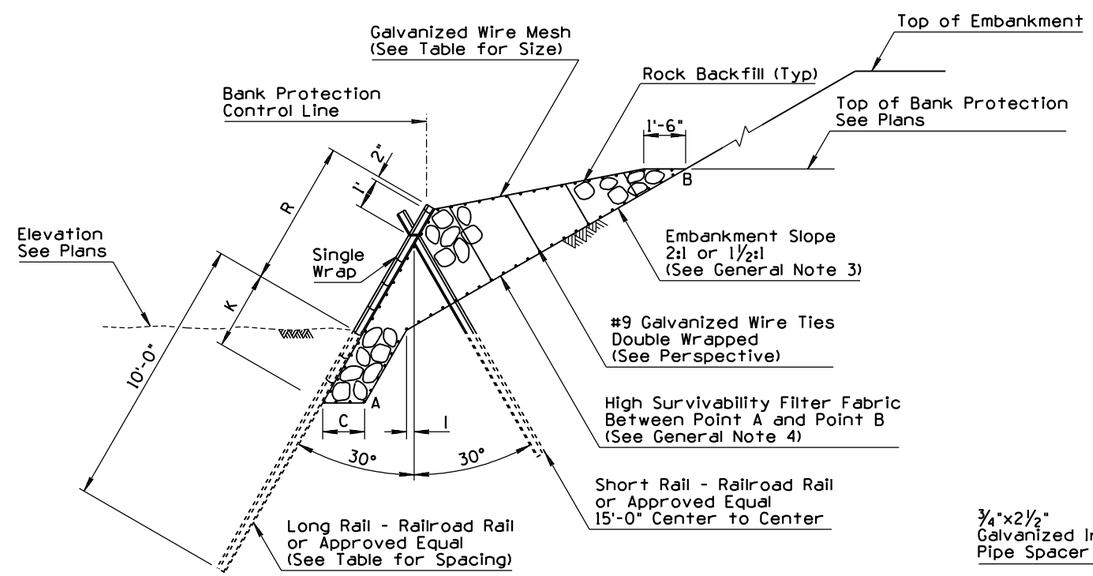

TYPE 2 AND 3 BANK PROTECTION

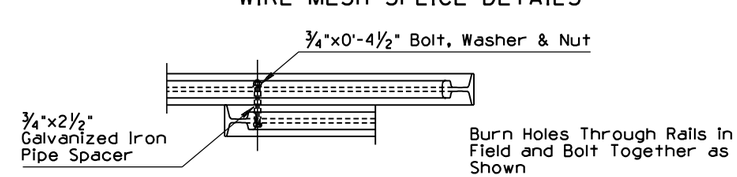

RAIL CONNECTION DETAIL

Type	SHORT RAIL LENGTH (Ft)	SHORT RAIL WT (Lbs/Yd)	LONG RAIL LENGTH (Ft)	LONG RAIL WT (Lbs/Yd)	LONG RAIL SPACING (Ft-In) (Center to Center)	MESH DESIGNATION	C (Ft-In)	I (Ft)	K (Ft-In)	R (Ft-In)	TOP OF BANK PROTECTION ABOVE THE STREAM BED (Ft)
1	N/A	N/A	10	20 Min	7-0	3"X3"-W1.4/W1.4 or 4"X4"-W1.4/W1.4	1-6	0	2-0	2-6	2 to 4
2	10	20 Min	15	50 Min	7-6		1-6	0	3-0	5-0	4 to 7
3	12	20 Min	17	50 Min	7-6		2-0	1	4-0	7-0	6 to 12

APPROVED FOR DESIGN: Mary Vipanna	STATE OF ARIZONA DEPARTMENT OF TRANSPORTATION ROADWAY STANDARD DRAWINGS	REV. 9/04
APPROVED FOR DISTRIBUTION: [signature]	① RAIL BANK PROTECTION FOR DRAINAGEWAYS TYPES 1, 2 & 3	DRAWING NO. C-17.10

NO	DESCRIPTION OF REVISIONS	MADE BY	DATE
1			
2			
3			
4			

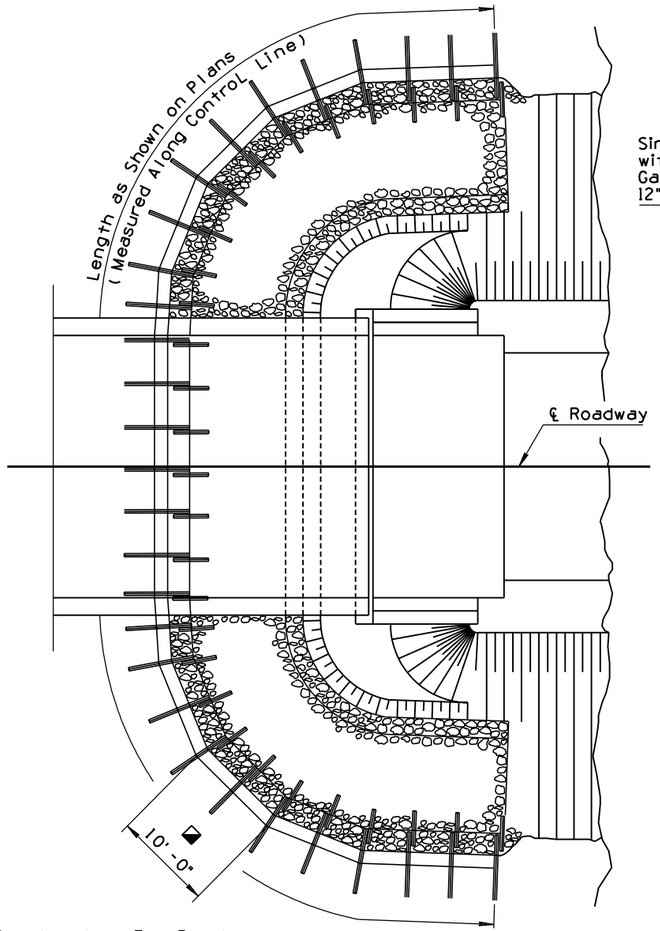

PLAN OF BANK PROTECTION AT ABUTMENT

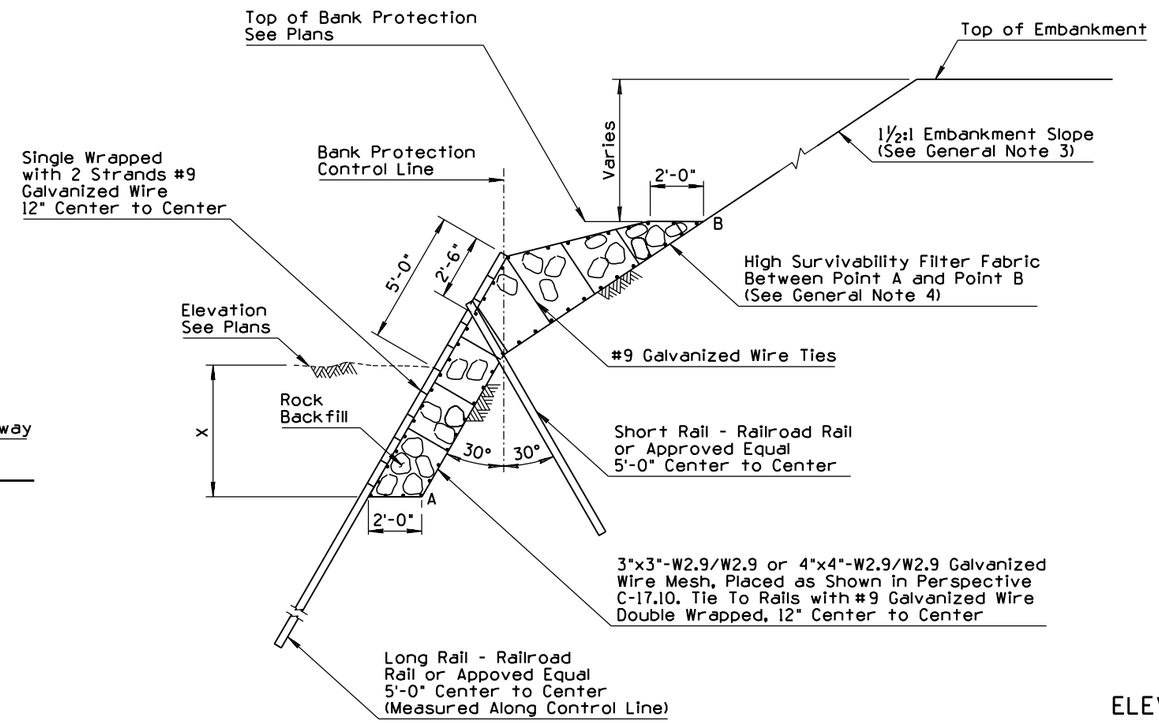

TYPICAL SECTION
See Perspective Std Dwg C-17.10

Type Per Plans	X (Ft-In)	Minimum Rail Length (Ft)		Minimum Rail Weight (Lbs/Yd)
		Long Rail	Short Rail	
4	5-0	22	10	50
5	7-6	25	13	50
6	10-0	28	16	50

GENERAL NOTES

1. Rock shall conform to Section 913-2.01(A) of the Standard Specifications. The rock shall have a minimum nominal diameter no smaller than the mesh opening, and a maximum nominal diameter of 12".
2. All mesh wire, tie wire, cable, bolts, washers and nuts shall be galvanized.
3. When other embankment slope rates are encountered, warp to 1½:1 or 2:1.
4. High survivability filter fabric shall conform to Section 913-2.05 of the Standard Specifications.
5. All wire mesh on a single project shall have the same mesh opening.

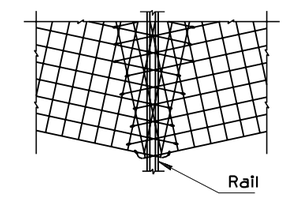

ELEVATION AT CHORD POINT ON CURVE

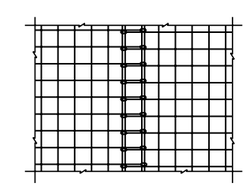

ELEVATION ON STRAIGHT SECTION

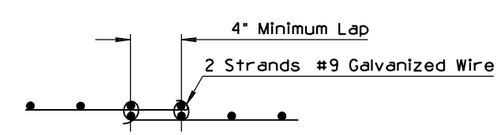

SECTION

WIRE MESH SPLICE DETAILS

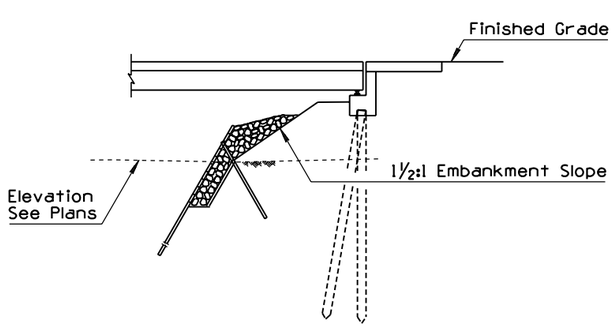

SECTION ON ℄ ROADWAY

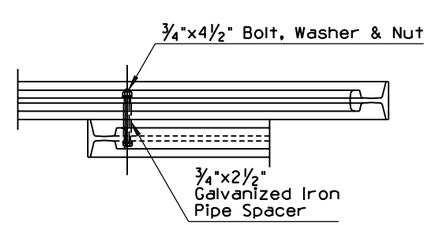

RAIL CONNECTION DETAIL
Burn Holes Through Rails In Field
and Bolt Together as Shown

APPROVED FOR DESIGN	STATE OF ARIZONA DEPARTMENT OF TRANSPORTATION ROADWAY STANDARD DRAWINGS	REV. 9/04
APPROVED FOR DISTRIBUTION	RAIL BANK PROTECTON AT ABUTMENTS TYPES 4, 5 & 6	DRAWING NO. C-17.15

NO	DESCRIPTION OF REVISIONS	MADE BY	DATE
1	REISSUED STANDARD	RLF	9/04
2			
3			
4			

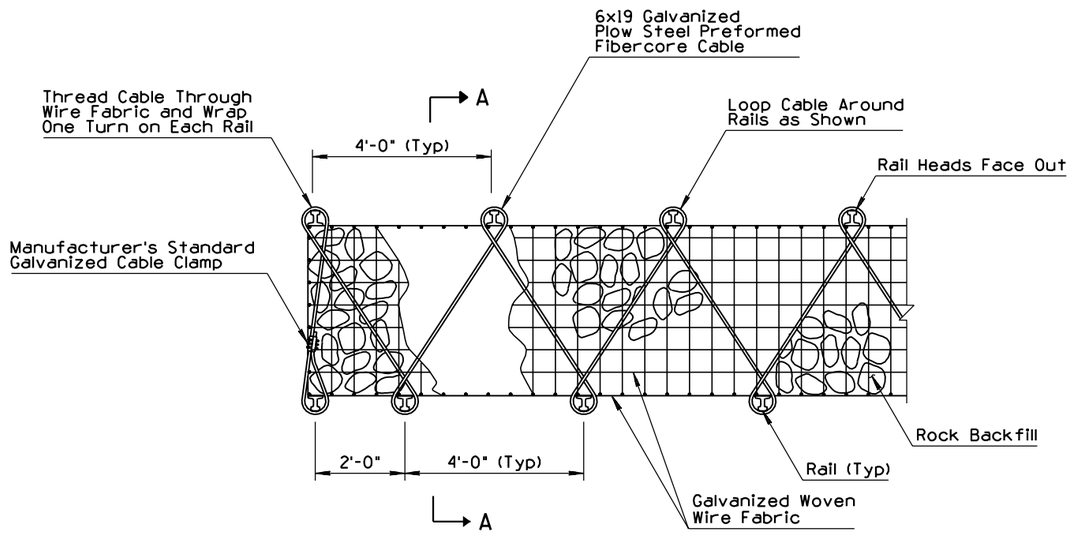

PLAN

TYPE 7 AND 8 BANK PROTECTION

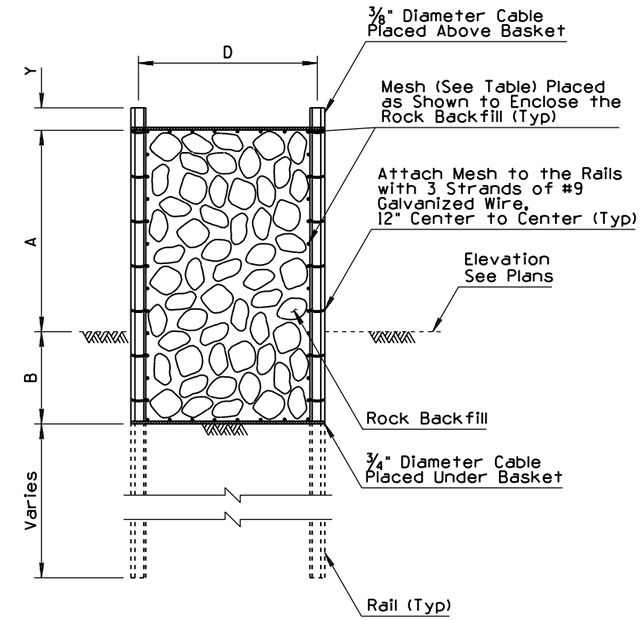

SECTION A-A

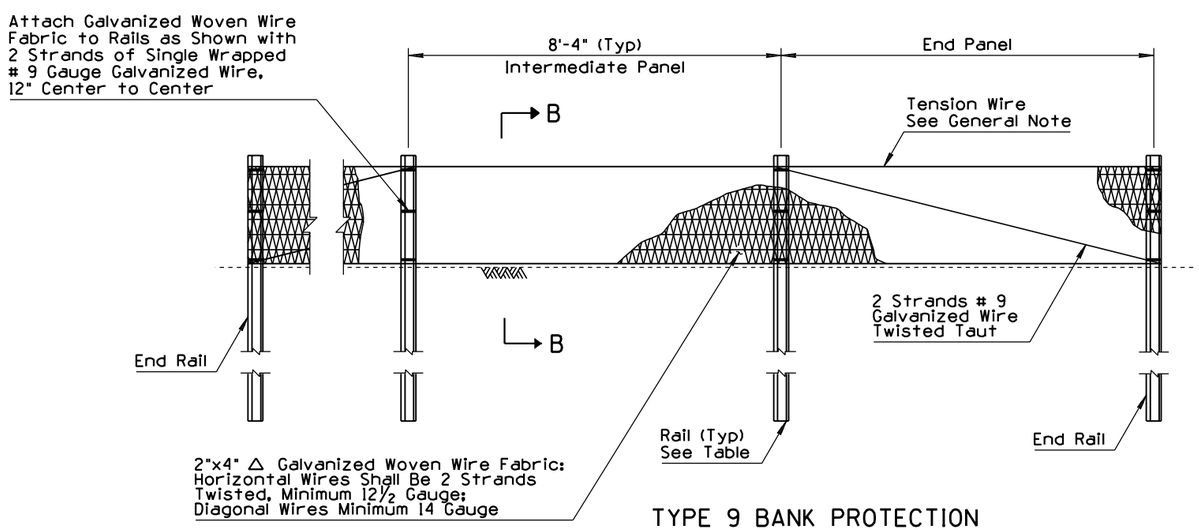

TYPE 9 BANK PROTECTION
ELEVATION

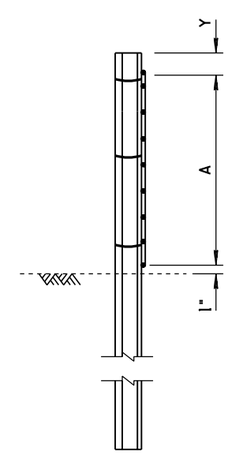

SECTION B-B

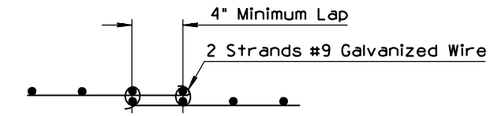

SECTION

WIRE MESH SPLICE DETAILS

GENERAL NOTES

1. Rock shall conform to Std Spec 913-2.01(A). The rock shall have a minimum nominal diameter no smaller than the mesh opening, and a maximim nominal diameter of 12".
2. All mesh wire, tie wire, cable, bolts, washers and nuts shall be galvanized.
3. Tension wires shall be 7 gauge (0.177 in diameter) coil spring steel wire with a minimum tensile strength of 75,000 pounds per square inch and shall be zinc-coated or aluminum-coated.

Type	MIN RAIL LENGTH (Ft)	MIN RAIL WT (lbs/Yd)	MESH	A (Ft-In)	B (Ft-In)	D (Ft)	Y (In)
7	15	50	3"X3"-W1.4/W1.4 or 4"X4"-W1.4/W1.4	4 - 0	2 - 0	4	6
8	18	50		7 - 0	3 - 0	5	6
9	10	15	N/A	2 - 2	N/A	N/A	3

APPROVED FOR DESIGN	STATE OF ARIZONA DEPARTMENT OF TRANSPORTATION ROADWAY STANDARD DRAWINGS	REV. 9/04
APPROVED FOR DISTRIBUTION	RAIL BANK PROTECTION FOR DRAINAGEWAYS TYPES 7, 8 & 9 ①	DRAWING NO. C-17.20

NO	DESCRIPTION OF REVISIONS	MADE BY	DATE
1	RENAMED STD DWG FROM C-18.40 TO C-18.10, SHEET 1 OF 3	RLF	9/04
2			
3			
4			

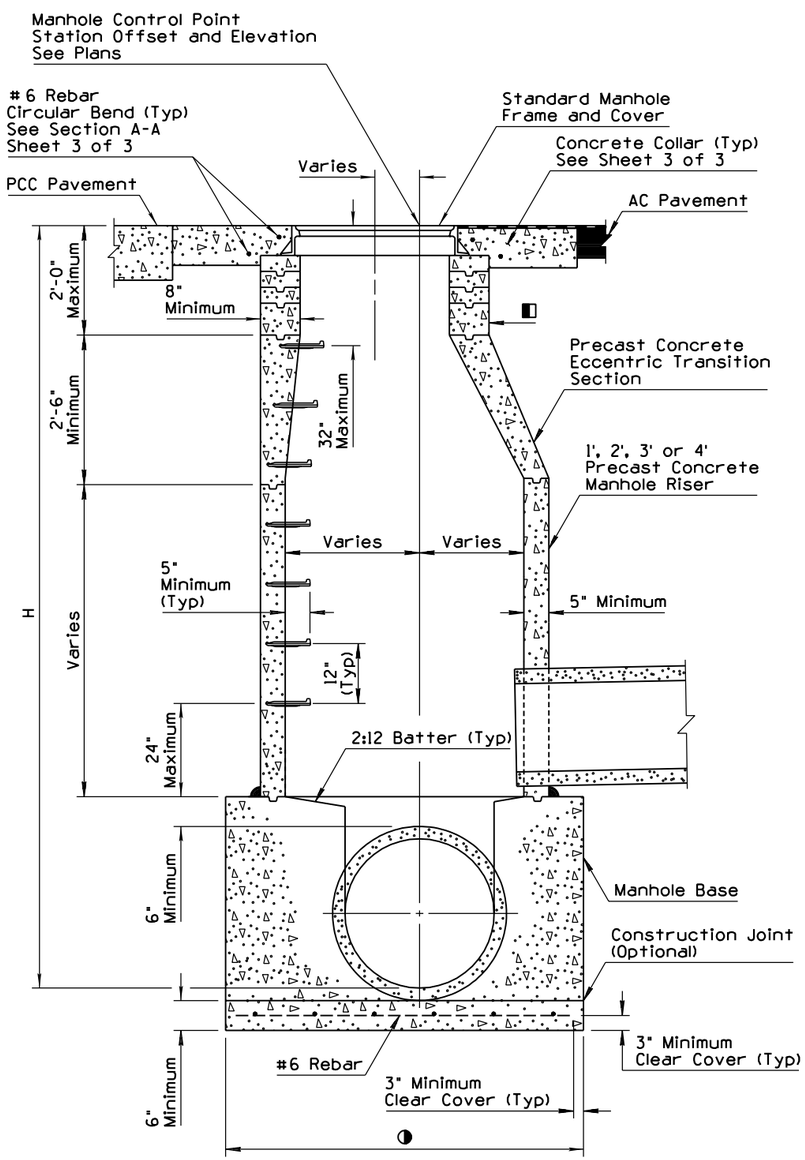

SECTION
NORMAL INSTALLATION
STANDARD BASE

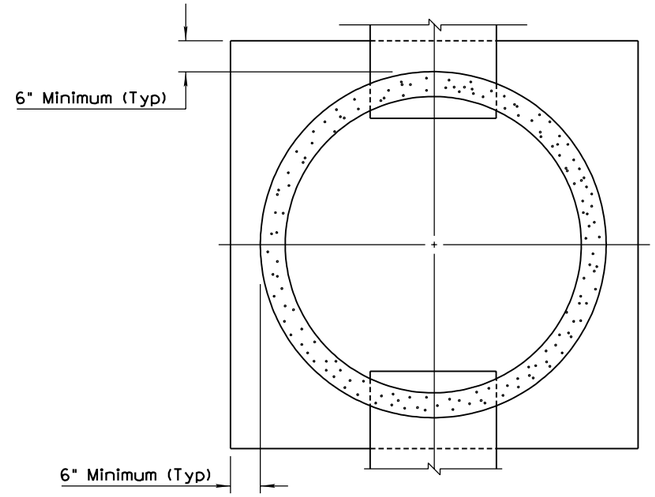

SECTION A-A

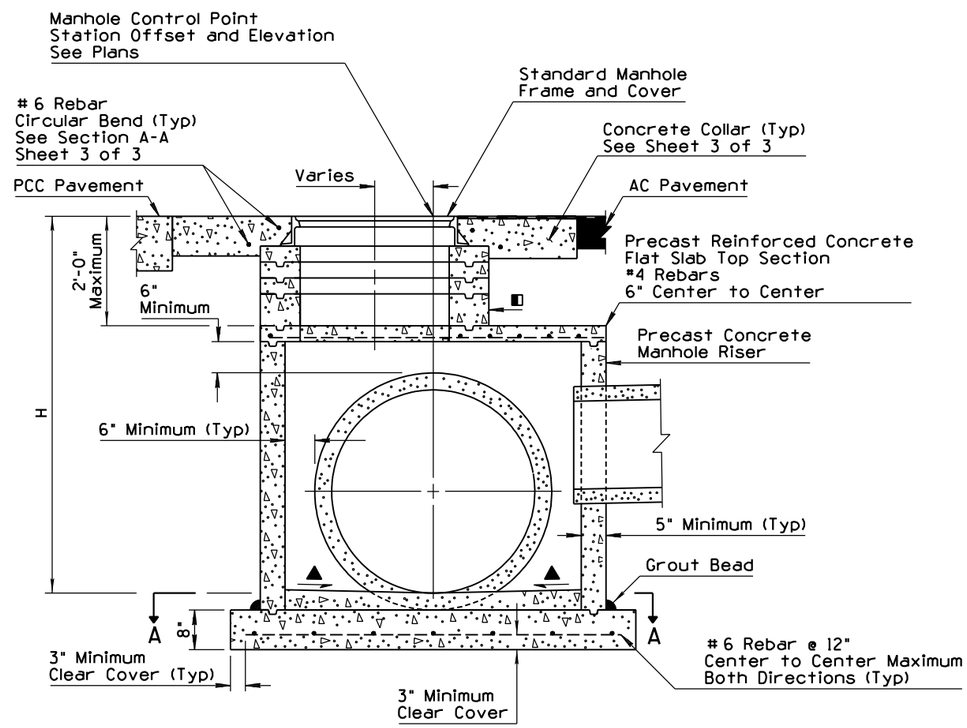

SECTION
SHALLOW INSTALLATION
SLAB BASE

GENERAL NOTES

1. Pipe sizes and elevations are shown on plans.
2. The manhole height, H, shall be measured from the lowest invert elevation to the top of the manhole frame.
3. Concrete for cast-in-place manholes shall be Class B.
4. All manholes deeper than 32 inches shall have steps. Manhole steps shall be constructed in accordance with AASHTO M199. Where precast manholes are used, the steps shall be installed at the same time sections are cast.
5. Per OSHA requirements, special treatments to include landings are required for heights exceeding 30 ft.
6. Precast manhole sections shall be manufactured in accordance with AASHTO M199, except that the compressive strength of each section shall be determined and accepted in accordance with Std Spec 1006-7.
7. Manhole location and elevation shall be as shown on plans. See Sheet 1 of 3 for station location reference point.
8. Backfill compaction shall conform to Std Specs 303-2 and 501.

◧ 4", 6", 8" or 12" (30" Inside Diameter) Grade Rings

▲ ¼"/ft

◑ See Sheet 2 of 3

APPROVED FOR DESIGN	STATE OF ARIZONA DEPARTMENT OF TRANSPORTATION ROADWAY STANDARD DRAWINGS	REV.
Mary Viparina		9/04
APPROVED FOR DISTRIBUTION	MANHOLE RISER DETAILS	DRAWING NO. 1 C-18.10 Sheet 1 of 3

NO	DESCRIPTION OF REVISIONS	MADE BY	DATE
1	RENAMED STD DWG TO C-18.10, SHEET 1 OF 3	RLF	9/04
2			
3			
4			

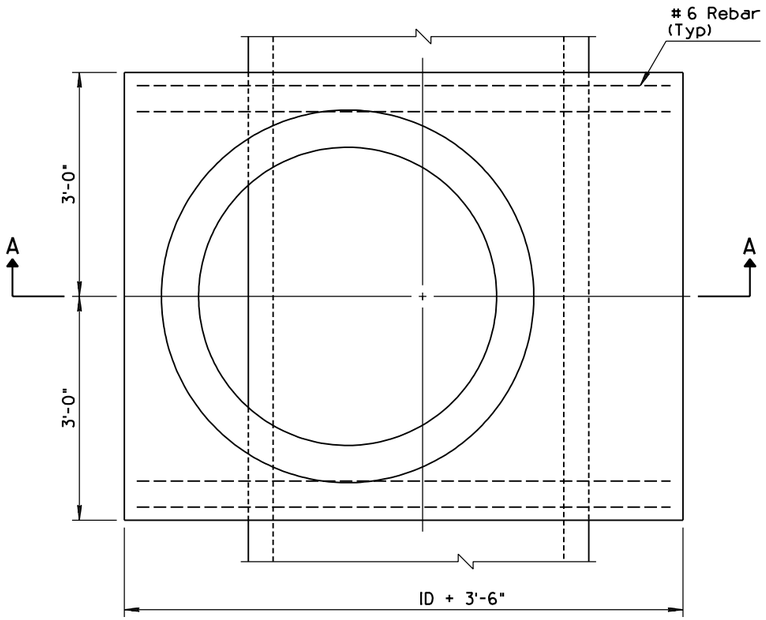

PLAN
FOR PIPES OVER 36" ID

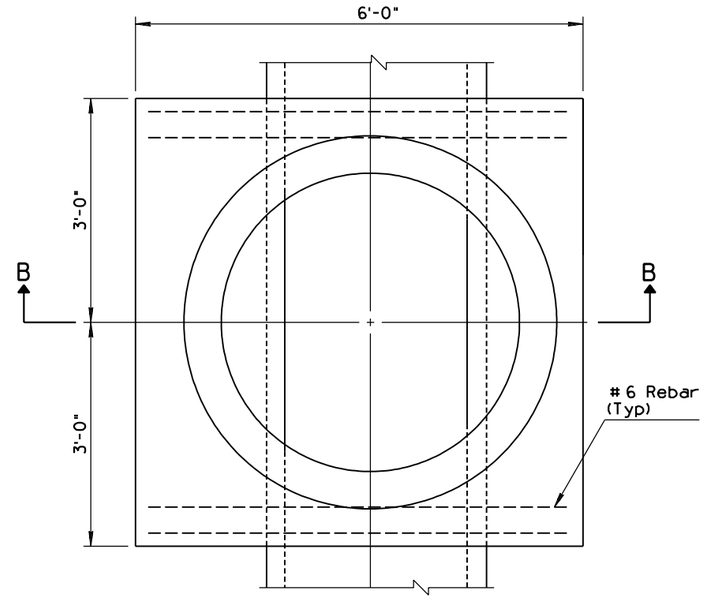

PLAN
FOR PIPES 36" ID AND SMALLER

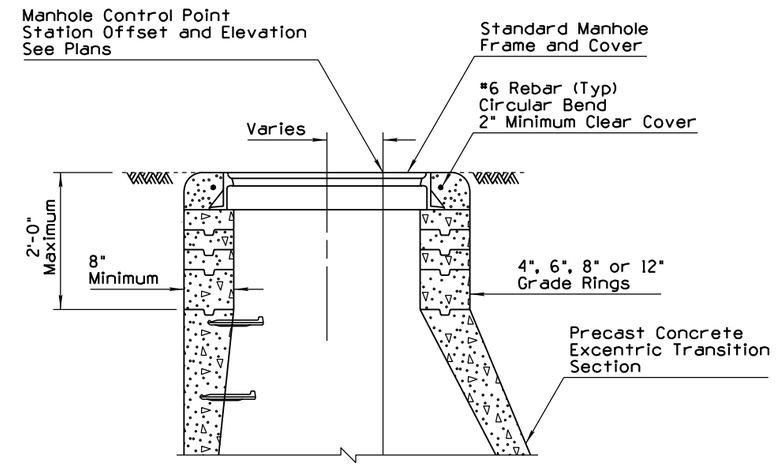

SECTION
RING, FRAME & COVER
NON-PAVEMENT INSTALLATION

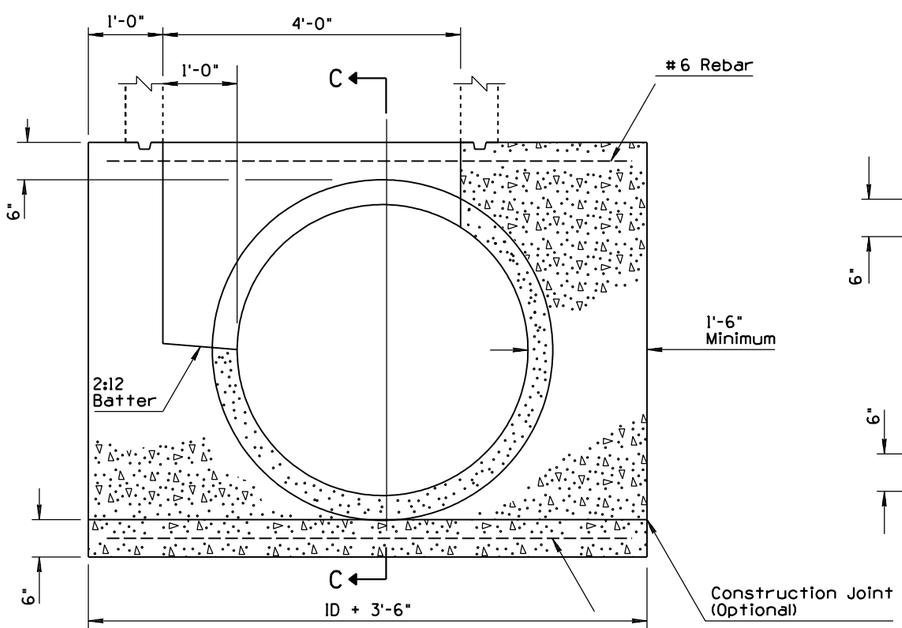

SECTION A-A
STANDARD BASE STRUCTURE
FOR PIPES OVER 36" ID

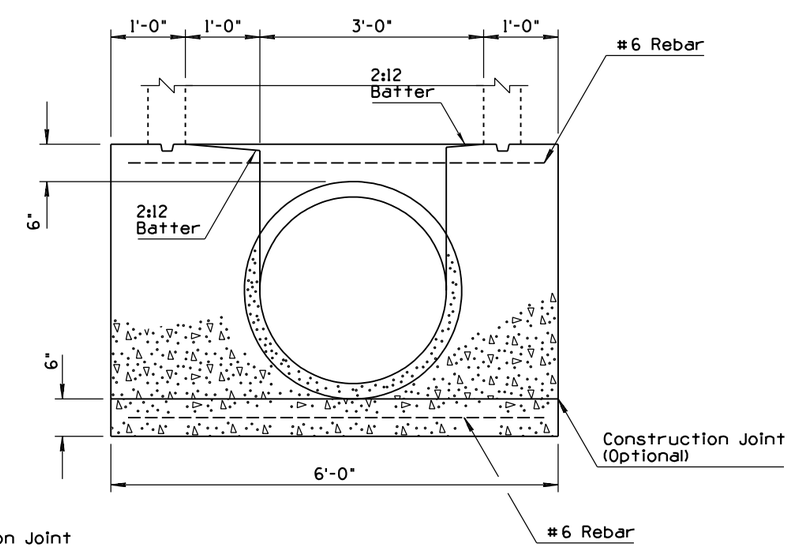

SECTION B-B
STANDARD BASE STRUCTURE
FOR PIPES 24" TO 36" ID

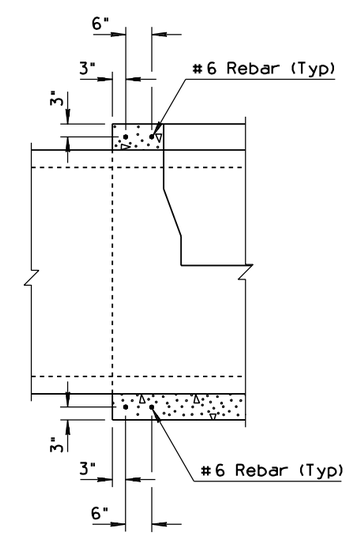

SECTION C-C

APPROVED FOR DESIGN	STATE OF ARIZONA DEPARTMENT OF TRANSPORTATION ROADWAY STANDARD DRAWINGS	REV. 9/04
APPROVED FOR DISTRIBUTION	MANHOLE BASE DETAILS NORMAL INSTALLATION	DRAWING NO. 1 C-18.10 Sheet 2 of 3

NO	DESCRIPTION OF REVISIONS	MADE BY	DATE
1	RENAMED STD DWG FROM C-18.20 TO C-18.10, SHEET 3 OF 4	RLF	9/04
2			
3			
4			

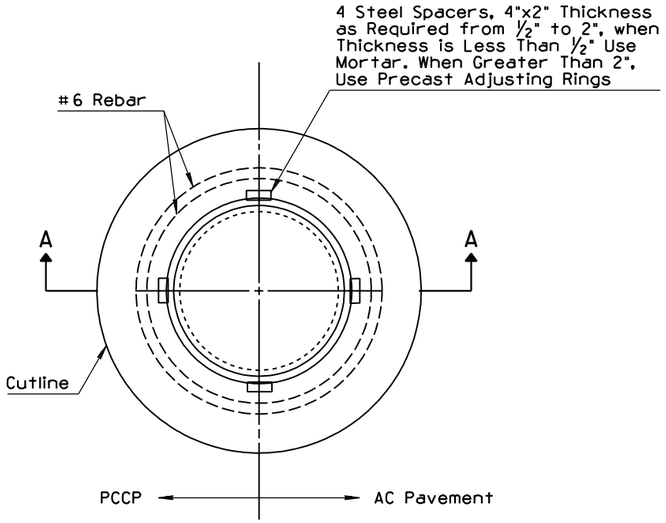

PLAN

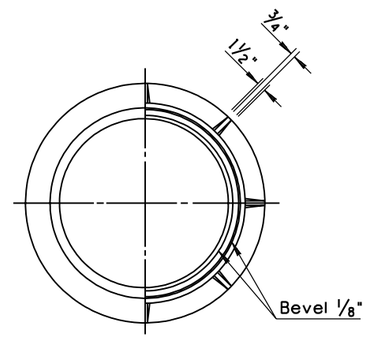

BOTTOM VIEW - TOP VIEW

TOP VIEW

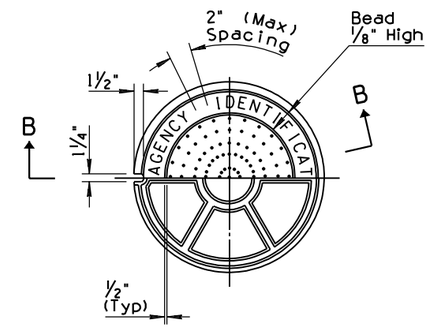

BOTTOM VIEW

GENERAL NOTES

1. All frames, grates, and covers shall support HS20 loading, minimum.
2. Casting weights shown are minimum weights and are either for cast-iron or ductile-iron castings. Casting weight shall not exceed 110 % of the weights shown.
3. Covers (excluding grates) shall conform to the following:
   - A. Manhole covers to contain the agency name and utility, as directed;
   - B. Letters shall be 2 inches in height and raised ⅛ inch above the plane of the cover;
   - C. Letters and words to be equally spaced; and
   - D. Letter font and layout shall be as approved by the Engineer.
4. Details shown are typical. Alternative designs of manhole frames and covers may be used upon approval of the Engineer, as long as the minimum loading and weight criteria (see above) are met.

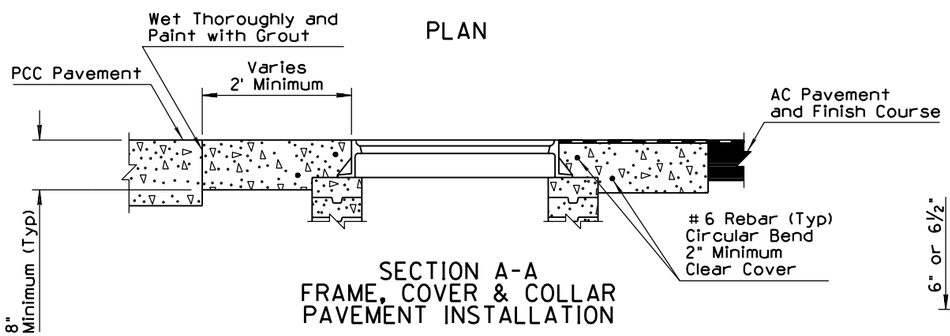

SECTION A-A
FRAME, COVER & COLLAR
PAVEMENT INSTALLATION

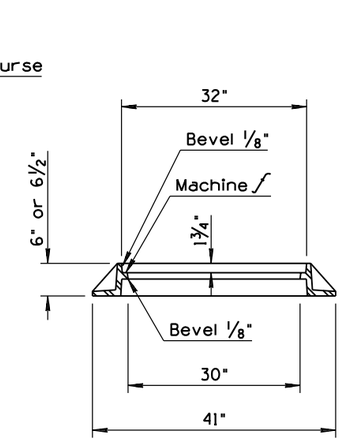

SECTION OF FRAME

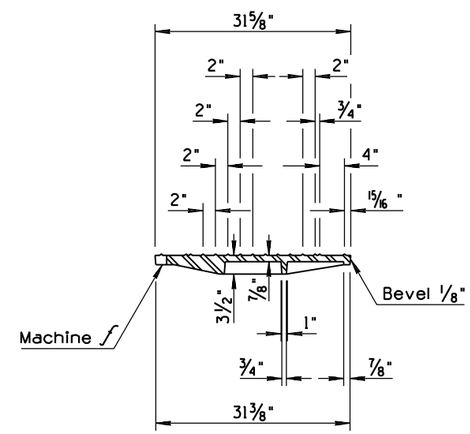

SECTION B-B

30" MANHOLE FRAME & COVER
Approximate Weight: Frame 204 Lbs
Cover 223 Lbs

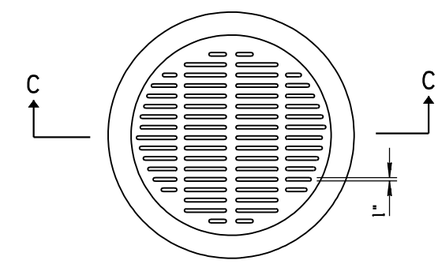

PLAN

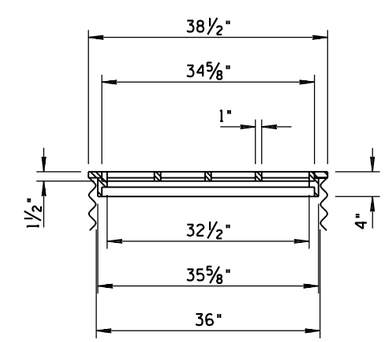

SECTION C-C
36" NOMINAL CMP FRAME & GRATE
Approximate Weight: Frame 125 Lbs
Cover 167 Lbs

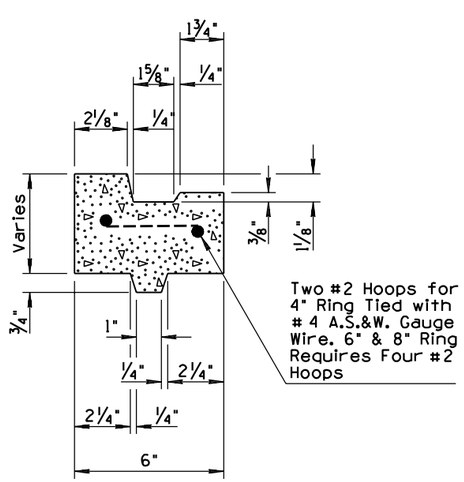

PRECAST ADJUSTING RING DETAIL

APPROVED FOR DESIGN	STATE OF ARIZONA DEPARTMENT OF TRANSPORTATION ROADWAY STANDARD DRAWINGS	REV.
Mary Vipauna		9/04
APPROVED FOR DISTRIBUTION	MANHOLE FRAME AND COVER DETAILS	DRAWING NO. 1 C-18.10 Sheet 3 of 3

NO	DESCRIPTION OF REVISIONS	MADE BY	DATE
1	REISSUED STD AS C-19.10, SHEET 1 OF 2	RLF	9/04
2	ADDED GENERAL NOTE 4	RLF	9/04
3			
4			

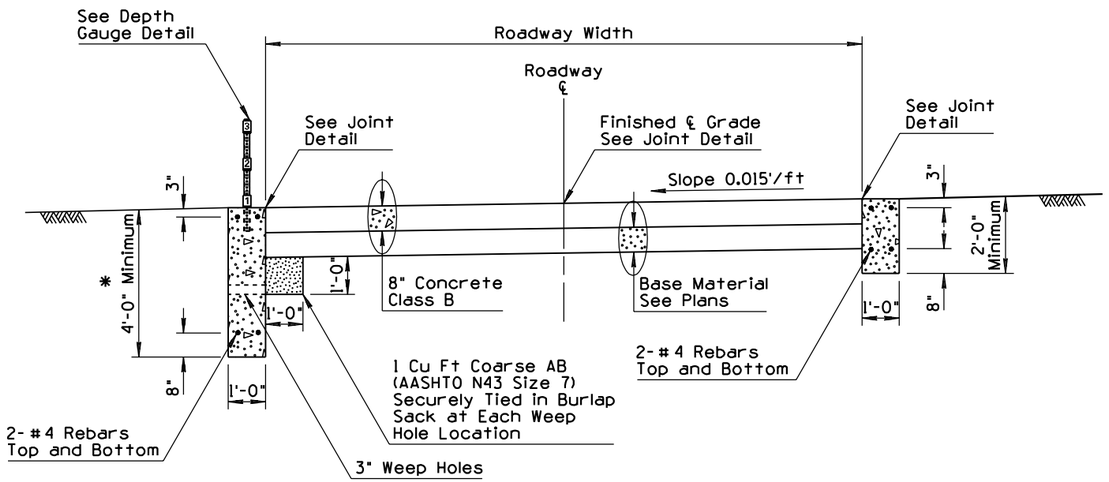

CONCRETE SURFACE ROAD
CONCRETE WALLS

* Min Distance Below Stream Bed

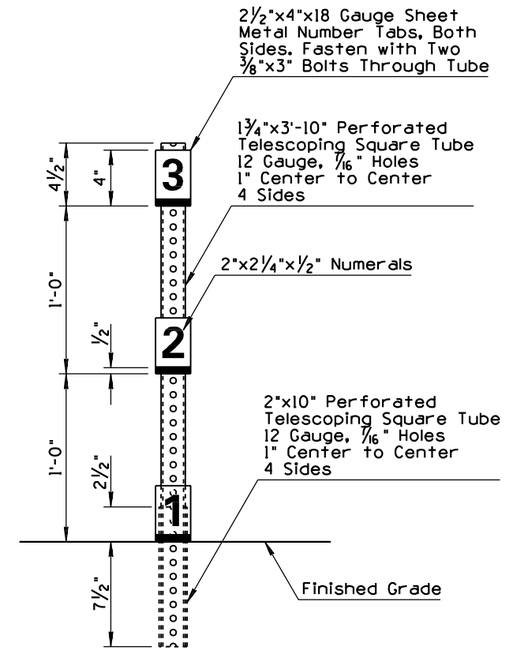

DEPTH GAUGE DETAIL

GENERAL NOTES

1. Ford walls shall be Class B concrete.
2. Depth gauge tubing shall be protected against concrete entering through bottom or perforations.
3. Depth gauge tubing and both sides of numeral tabs shall be painted with two coats of white enamel. Numerals and markers shall be painted with one coat of gloss black enamel.
4. (2) Depth gauge foundation may be utility concrete.

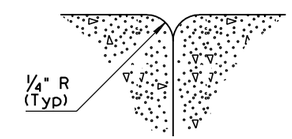

JOINT DETAIL

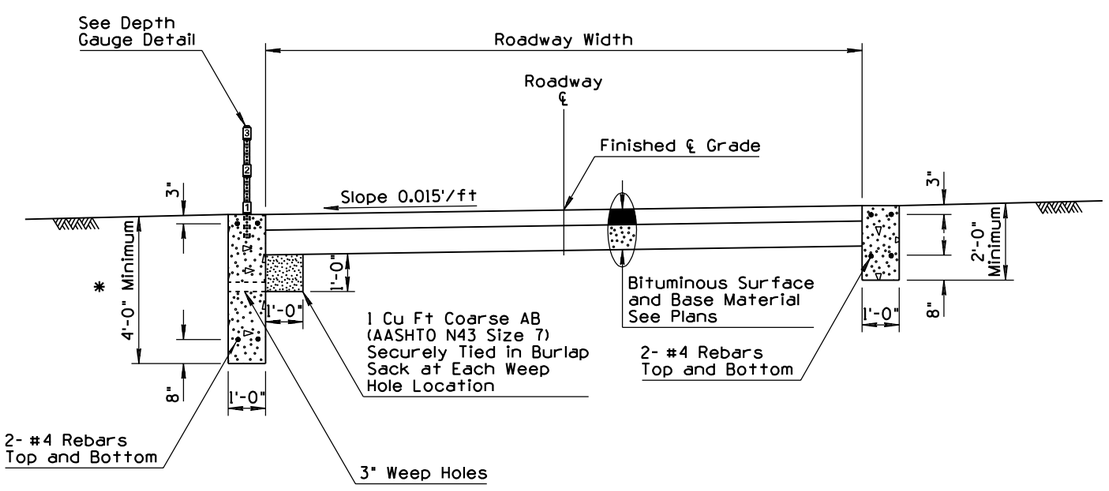

BITUMINOUS SURFACE ROAD
CONCRETE WALLS

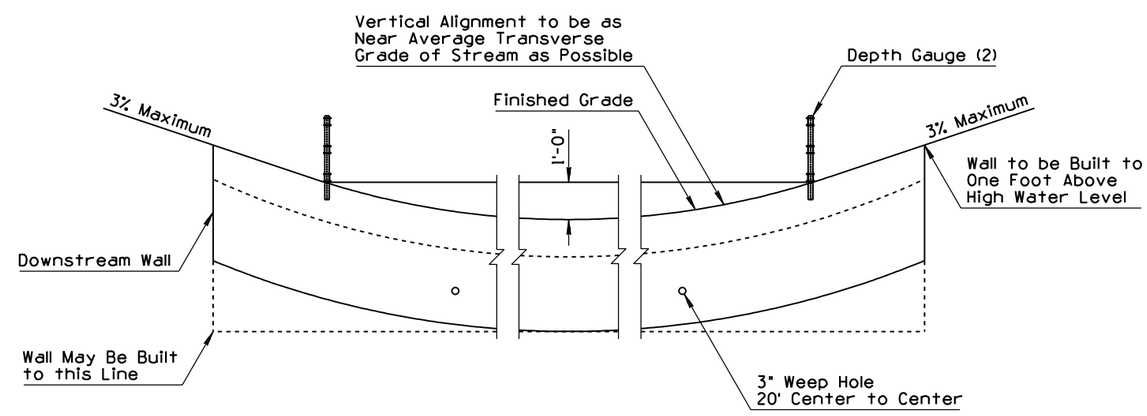

ELEVATION LOOKING UPSTREAM

APPROVED FOR DESIGN	STATE OF ARIZONA DEPARTMENT OF TRANSPORTATION ROADWAY STANDARD DRAWINGS	REV. 9/04
APPROVED FOR DISTRIBUTION	FORD CONCRETE WALLS	DRAWING NO. (1) C-19.10 Sheet 1 of 2

NO	DESCRIPTION OF REVISIONS	MADE BY	DATE
1	REISSUED STD AS C-19.10, SHEET 2 OF 2	RLF	9/04
2	DELETED ORIGINAL GENERAL NOTE 4	RLF	9/04
3			
4			

GENERAL NOTES

1. All timber shall be rough, pressure treated and unpainted.
2. Rock basket, full length of structure, shall be included only when called for on plans.
3. See plans for bituminous surface and base material details.

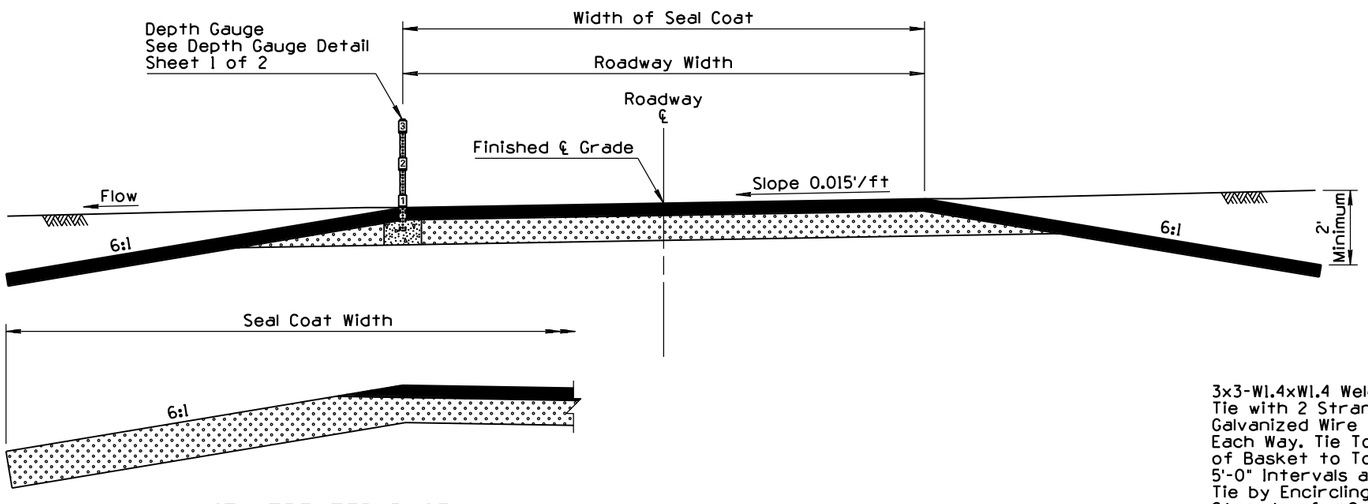

WITH TREATED BASE

TYPE 1
BITUMINOUS SURFACE ROAD

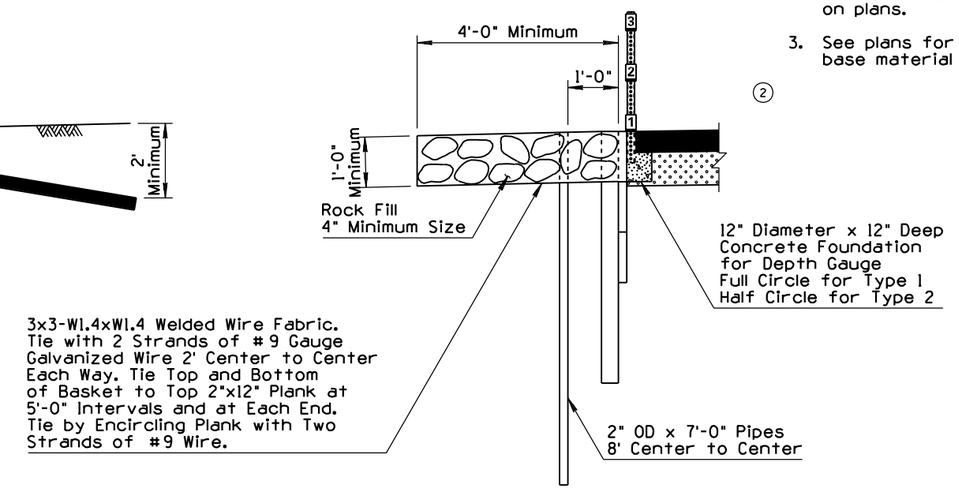

DETAIL A

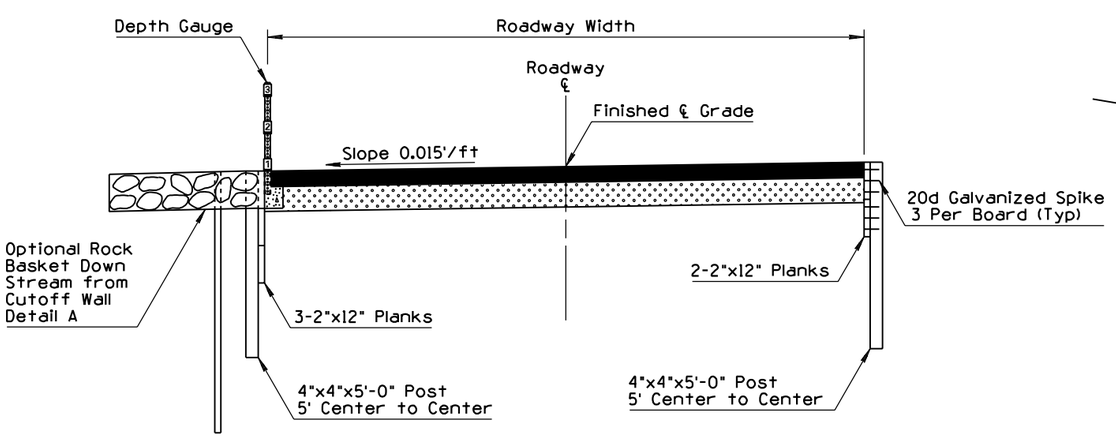

TYPE 2
BITUMINOUS SURFACE FORD
TIMBER CUTOFF WALLS

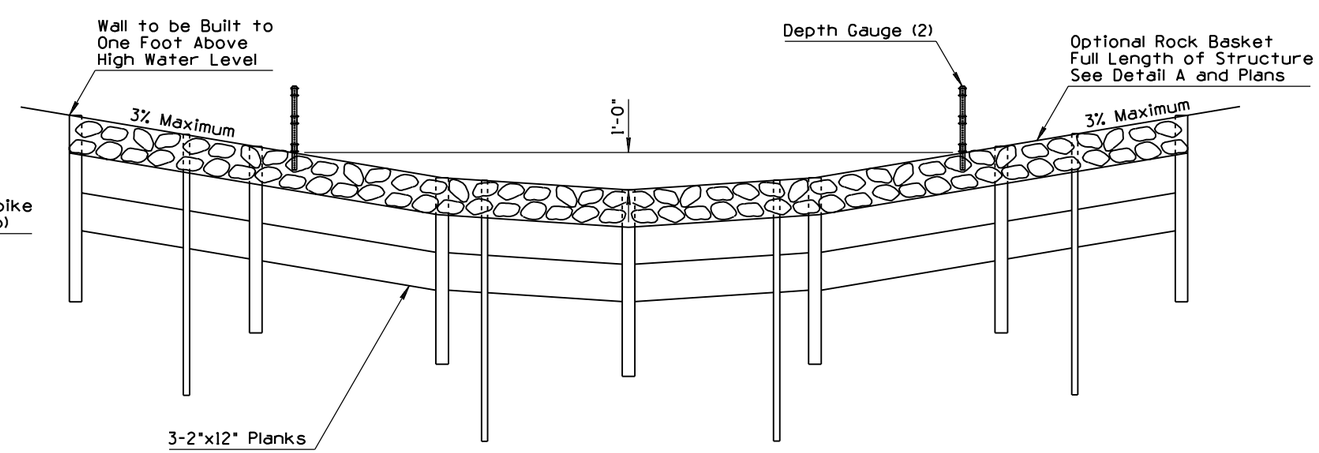

ELEVATION - TYPE 2

APPROVED FOR DESIGN	STATE OF ARIZONA DEPARTMENT OF TRANSPORTATION ROADWAY STANDARD DRAWINGS	REV. 9/04
APPROVED FOR DISTRIBUTION	FORD TYPES 1 AND 2	DRAWING NO. C-19.10 (1) Sheet 2 of 2

NO	DESCRIPTION OF REVISIONS	MADE BY	DATE
1	REVISED REFERENCE MARKER LETTERING	RLF	9/04
2	REVISED DIMENSION	RLF	9/04
3	REVISED GENERAL NOTE 7	RLF	9/04
4	REVISED SHANK	RLF	9/04

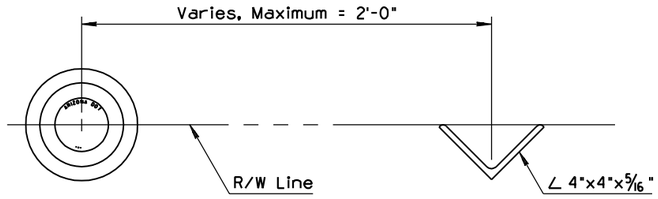

PLAN

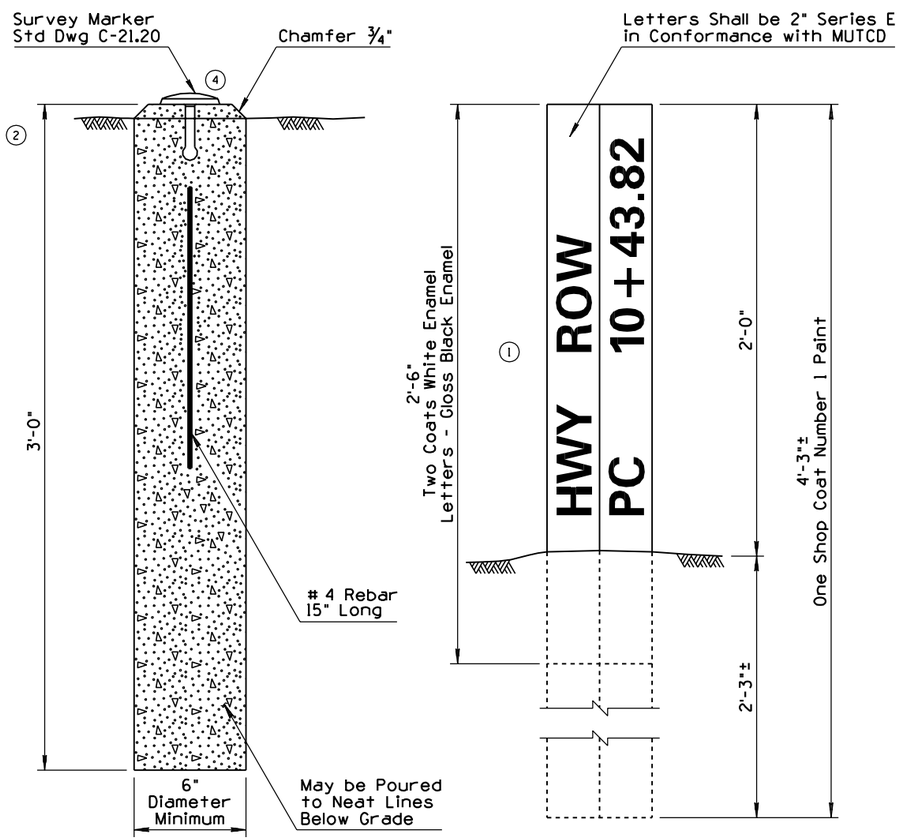

ELEVATION
SURVEY MONUMENT

ELEVATION
REFERENCE MARKER

RIGHT-OF-WAY MARKER

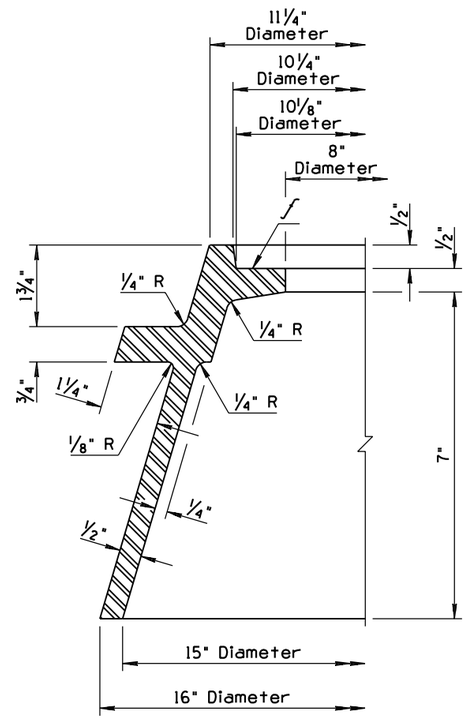

FRAME A

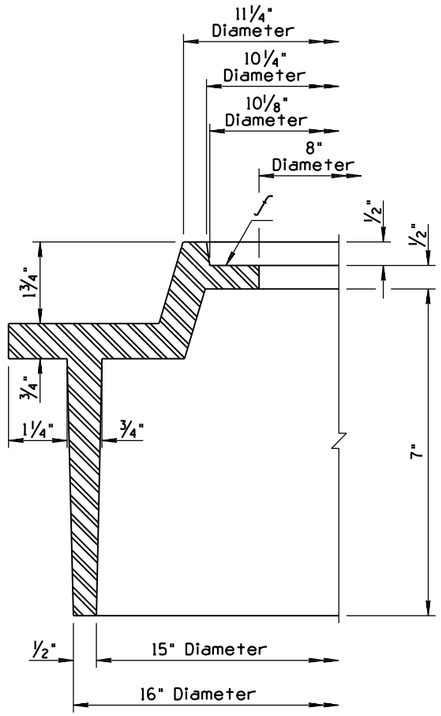

FRAME B

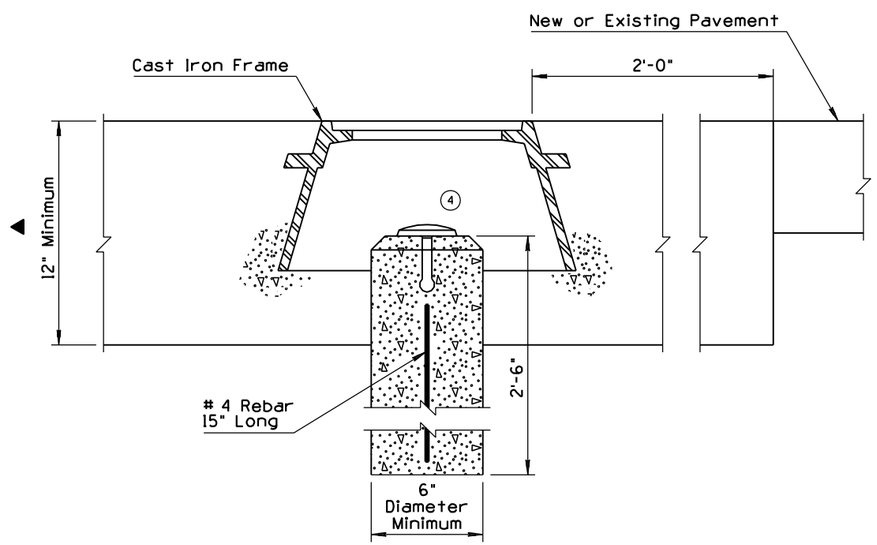

SURVEY MONUMENT
FRAME AND COVER

GENERAL NOTES

1. A survey monument and frame & cover, complete-in-place, shall be considered a unit.
2. A Right-of-Way marker, consisting of a survey monument and a reference marker, complete-in-place, shall be considered a unit.
3. All markers shall be placed as shown on the plans or as directed by the Engineer.
4. Frames may be either Type A or Type B.
5. Frames shall weigh at least 53 pounds.
6. Covers shall weigh at least 16 pounds.
7. (3) Machined portions of the frame and cover are shown by the symbol "ƒ". The allowable tolerance for machined areas is ±1/64". Concrete shall conform to Std Spec 922.
8. Survey monuments shall be magnetically detectable.

▲ 12" or pavement structure thickness, whichever is greater.

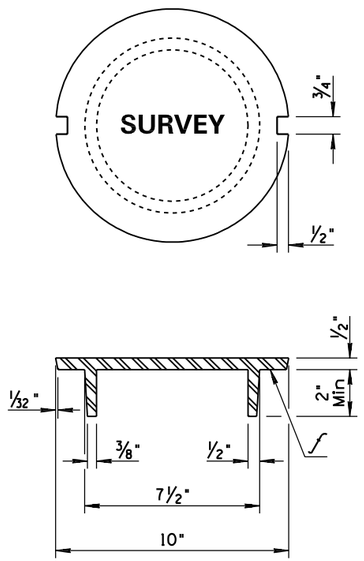

COVER SECTION

APPROVED FOR DESIGN	STATE OF ARIZONA DEPARTMENT OF TRANSPORTATION ROADWAY STANDARD DRAWINGS	REV.
Mary Vipauna		9/04
APPROVED FOR DISTRIBUTION	SURVEY MONUMENT FRAME AND COVER RIGHT-OF-WAY MARKER	DRAWING NO.
Julie Everett		C-21.10

NO	DESCRIPTION OF REVISIONS	MADE BY	DATE
1	REVISED GENERAL NOTES	RLF	9/04
2	REVISED SHANK DESIGN CRITERIA	RLF	9/04
3	ADDED DETAIL A - RIGHT-OF-WAY MARKER INFORMATION	RLF	9/04
4			

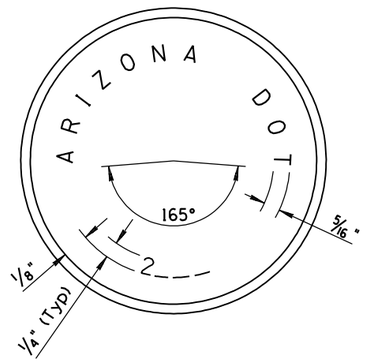

PLAN

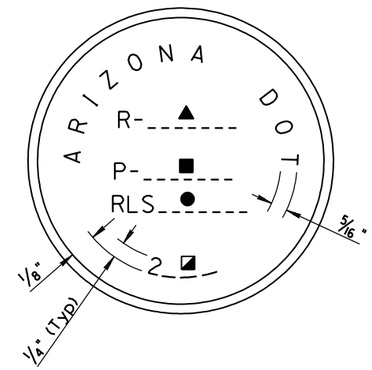

DETAIL A
R/W MARKER INFORMATION

3

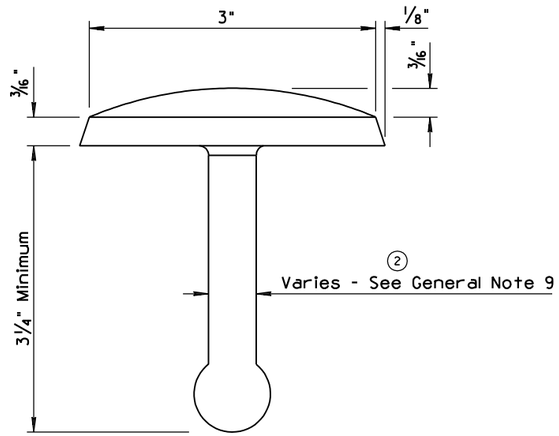

ELEVATION
SURVEY MARKER

1

GENERAL NOTES

1. Survey marker may be used with survey monument, and as bench or R/W markers.
2. Survey marker will be furnished by the Department. Cast-in lettering format may vary.
3. When used to define section lines, the marker shall be stamped in accordance with the BLM "Manual of Surveying Instructions."
4. When used to define R/W not consisting of section lines, the marker shall be stamped in accordance with Detail A, R/W Marker information.
5. When used as a R/W marker or to define a section line, the land surveyor's registration number shall be stamped on the marker.
6. Bench marks shall be established on headwalls, bridge walls and other permanent structures, as shown on plans or as directed by the Engineer.
7. Station, elevation, year, and/or other information shall be hand stamped in field, as approved by the Engineer.
8. Survey marker shall be made of brass.
9. Shank cross-sectional area shall be a minimum of 0.31 square inches and a maximum of 0.60 square inches. Shank cross-section may vary and is not a critical feature of this standard.
10. Shank geometry shall provide for secure anchorage in concrete.
11. Text shall not obscure survey point.

▲ Right-Of-Way plan number

■ Point Number

● Registered Land Surveyor Number - see General Note 5

◪ Year

APPROVED FOR DESIGN	STATE OF ARIZONA DEPARTMENT OF TRANSPORTATION ROADWAY STANDARD DRAWINGS	REV.
Mary Viparina		9/04
APPROVED FOR DISTRIBUTION	SURVEY MARKER	DRAWING NO.
Julie Everett		C-21.20

CONSTRUCTION STANDARD DRAWINGS - INDEX

DRAWING NO.	TITLE
C-01.10	SYMBOL LEGEND (4 SHEETS)
C-01.30	GENERAL ABBREVIATIONS (3 SHEETS)
C-02.10	SLOPES, DIVIDED HIGHWAYS
C-02.20	SLOPES, PRIMARY ROADWAYS
C-02.30	SLOPES, SECONDARY/MISC ROADWAYS
C-03.10	DITCHES, CHANNELS, DIKES AND BERMS (5 SHEETS)
C-04.10	SPILLWAY, EMBANKMENT
C-04.20	DOWNDRAIN, EMBANKMENT
C-04.30	SPILLWAY LENGTH TABLE
C-04.40	DOWNDRAIN LENGTH TABLE
C-04.50	DOWNDRAIN ENERGY DISSIPATOR
C-05.10	CURB & GUTTER, CURB, AND GUTTER
C-05.12	CURB & GUTTER TRANSITIONS (3 SHEETS)
C-05.20	CONCRETE DRIVEWAYS & SIDEWALKS (2 SHEETS)
C-05.30	SIDEWALK RAMP (7 SHEETS)
C-05.40	MEDIAN PAVING AND NOSE TAPER
C-05.50	CONCRETE BUS BAY
C-06.10	DRIVEWAY & TURNOUT LAYOUTS (2 SHEETS)
C-07.01	PCCP JOINTS (2 SHEETS)
C-07.02	LOAD TRANSFER DOWEL ASSEMBLY
C-07.03	PCCP JOINT LOCATIONS, MAINLINE (8 SHEETS)
C-07.04	PCCP JOINT LOCATIONS, RAMPS & CROSSROADS (5 SHEETS)
C-08.20	PAVED GORE AREA

DRAWING NO.	TITLE
C-10.00	GUARDRAIL MEASUREMENT LIMITS
C-10.01	GUARDRAIL INSTALLATION, TYPE A AND REFLECTOR TAB
C-10.02	GUARDRAIL INSTALLATION, TYPE B AND REFLECTOR TAB
C-10.03	W-BEAM GUARDRAIL, G4(1W) AND G4(2W), BLOCKED-OUT TIMBER POST
C-10.04	W-BEAM GUARDRAIL, G4(1S), BLOCKED-OUT STEEL POST
C-10.05	W-BEAM GUARDRAIL, G4(MODIFIED), WITH FREEWAY CURB & GUTTER (2 SHEETS)
C-10.06	W-BEAM GUARDRAIL, NESTED (2 SHEETS)
C-10.07	W-BEAM GUARDRAIL, BOLTED ANCHOR (2 SHEETS)
C-10.08	W-BEAM GUARDRAIL, END ANCHOR
C-10.20	THRIE-BEAM GUARDRAIL, G9, BLOCKED-OUT STEEL POST
C-10.30	GUARDRAIL TRANSITION, THRIE BEAM TO CONCRETE HALF-BARRIER, 32" TYPE 'F', (APPROACH), AC PAVEMENT
C-10.31	GUARDRAIL TRANSITION, THRIE BEAM TO CONCRETE HALF-BARRIER, 32" TYPE 'F', (APPROACH), PCCP
C-10.32	GUARDRAIL TRANSITION, W-BEAM TO CONCRETE HALF-BARRIER, 32" TYPE 'F', (DEPARTURE)
C-10.40	CONCRETE MEDIAN BARRIER, 32" TYPE 'F', CAST-IN-PLACE
C-10.41	CONCRETE MEDIAN BARRIER, 42" TYPE 'F', CAST-IN-PLACE
C-10.42	GLARE SCREEN, CONCRETE MEDIAN BARRIER (3 SHEETS)
C-10.50	CONCRETE HALF BARRIER, 32" TYPE 'F' (2 SHEETS)
C-10.51	CONCRETE HALF BARRIER, 32" TYPE 'F', WITH SIDEWALK
C-10.52	CONCRETE HALF BARRIER, 32" TYPE 'F', WITH GUTTER
C-10.53	CONCRETE HALF BARRIER, 42" TYPE 'F', WITH GUTTER
C-10.54	CONCRETE HALF BARRIER, 32" TYPE 'F' AT PIERS (3 SHEETS)
C-10.55	CONCRETE HALF BARRIER, 42" TYPE 'F' AT PIERS (3 SHEETS)
C-10.70	CONCRETE HALF-BARRIER TRANSITION TO VERTICAL, 32" TYPE 'F' WITH CAISSONS (3 SHEETS)
C-10.71	CONCRETE HALF-BARRIER TRANSITION TO VERTICAL, 32" TYPE 'F' WITH CURB & GUTTER (2 SHEETS)
C-10.72	CONCRETE HALF-BARRIER TRANSITION TO VERTICAL ,42" TO 32" TYPE 'F' WITH CAISSONS (3 SHEETS)
C-10.73	CONCRETE HALF-BARRIER TRANSITION TO VERTICAL, 42" TO 32" TYPE 'F' WITH GUTTER (2 SHEETS)
C-10.74	CONCRETE HALF-BARRIER TRANSITION, 42" TO 32" TYPE 'F'
C-10.75	CONCRETE HALF-BARRIER TRANSITION, TYPE 'F' TANGENT DEPARTURE (2 SHEETS)
C-10.76	CONCRETE HALF-BARRIER TRANSITION, TYPE 'F' AT RADIUS, 32" TO 0"
C-10.77	CONCRETE HALF-BARRIER TRANSITION, END TERMINAL, CURB AND GUTTER
C-11.10	ROADWAY CATTLE GUARD (3 SHEETS) (STANDARD DRAWING TEMPORARILY SUSPENDED - USE STANDARD DETAIL X-1110)
C-11.20	CATTLE GUARD, DRAINAGE
C-12.10	FENCE, WOVEN AND BARBED WIRE WITH GATES (5 SHEETS)
C-12.20	FENCE, CHAIN LINK TYPES 1 AND 2 WITH GATES (3 SHEETS)
C-12.30	FENCE, CHAIN LINK CABLE BARRIER (3 SHEETS)

REV: 9/07/04

CONSTRUCTION STANDARD DRAWINGS - INDEX

DRAWING NO.	TITLE
C-13.10	PIPE CULVERT INSTALLATION (2 SHEETS)
C-13.15	TYPICAL PIPE INSTALLATION
C-13.20	PIPE, REINFORCED CONCRETE END SECTION
C-13.25	PIPE, CORRUGATED METAL END SECTION
C-13.30	PIPE AND PIPE ARCH, CORRUGATED METAL CONCRETE INVERT PAVING
C-13.55	PIPE, CATTLE-VEHICLE PASS, MITERED END TREATMENT
C-13.60	SLOTTED DRAIN DETAILS
C-13.65	SLOTTED DRAIN, INSTALLATION DETAILS
C-13.70	STORM DRAIN, CONNECTION DETAILS
C-13.75	STORM DRAIN, OUTLET BARRIER GATE
C-13.76	STORM DRAIN OUTLET AND STORM DRAIN PLUG
C-13.80	PIPE COLLAR DETAILS
C-15.10	CATCH BASIN, TYPE 1
C-15.20	CATCH BASIN, TYPE 3 (3 SHEETS)
C-15.30	CATCH BASIN, TYPE 4
C-15.40	CATCH BASIN, TYPE 5 (2 SHEETS)
C-15.50	CATCH BASIN, FRAME AND GRATE
C-15.70	CATCH BASIN, MISCELLANEOUS DETAILS (2 SHEETS)
C-15.75	CATCH BASIN, DROP INLET
C-15.80	CATCH BASIN, FLUSH
C-15.81	CATCH BASIN, SIDE SLOPE
C-15.90	CATCH BASIN, MEDIAN DIKE (PRECAST)
C-15.91	FREEWAY CATCH BASIN DETAILS (2 SHEETS)
C-15.92	CATCH BASIN WITH CONCRETE HALF BARRIER, TYPE 'F'
C-16.40	IRRIGATION SLEEVES
C-17.10	RAIL BANK PROTECTION FOR DRAINAGEWAYS, TYPES 1, 2 & 3
C-17.15	RAIL BANK PROTECTION AT ABUTMENTS, TYPES 4, 5 & 6
C-17.20	RAIL BANK PROTECTION FOR DRAINAGEWAYS, TYPES 7, 8 & 9

DRAWING NO.	TITLE
C-18.10	MANHOLES (3 SHEETS)
C-19.10	FORD, CONCRETE WALLS (2 SHEETS)
C-21.10	SURVEY MONUMENT, FRAME AND COVER, RIGHT-OF-WAY MARKER
C-21.20	SURVEY MARKER

REV. 9/07/04