Arizona Department of Transportation

ROADWAY ENGINEERING GROUP

MEMORANDUM

To: All Users of the Construction Standard Drawings- C-Standards	**Date:** July 19, 2001
From: John L. Louis Assistant State Engineer Roadway Engineering Group	**Subject:** C-Standards Revisions

Several revisions to the Construction Standard Drawings have been made and are included in a supplemental packet to be inserted into the April 2000 Construction Standard Drawings. Significant revisions included in the update are:

1. Standard C-15.92 Catch Basin frame has been modified to accept a revised Standard C-15.50 bicycle safe grate as an alternate for locations where bicycle traffic is allowed.

2. Guard rail height to top of rail has been revised from 27" to 28". This necessitates a corresponding 1" increase in the height of the thrie beam transition to concrete barrier.

3. Welding for catch basin frames and grates will conform to the requirements of Standard Specification 604-3.06 for structural steel.

4. PCCP joint details for transverse and longitudinal construction joints have been added to conform to current ADOT materials design practice. Weakened plane joints are revised to show only a single saw cut.

5. Standard Right of Way Markers have added a rebar to make them magnetically detectable. Brass caps require stamping with the surveyor's registration number to comply with state board regulations.

A listing of all the revised standards with a brief description of the revisions is shown on the following page.

Design personnel should review the revised drawings and incorporate the updates into their design plans as appropriate. Construction personnel should review the drawings for possible implementation with ongoing construction. Please arrange for additional copies for all users within your Group or District. Additional copies (8 1/2"x 11" or 11"x 17") may be obtained from Engineering Records at 602-712-8216.

An updated 1A sheet (List of Standards) is available at the Roadway Support Desk at 602-712-8667 or 8491.

Questions regarding the revisions may be directed to Tom Scheck (602-712-8674), Bob Trujillo (602-712-7383) or Terry Otterness (602-712-4285).

JLL/THO

C:

Roadway Engineering Group	Regional Traffic Engineers (4)
Traffic Group	Materials Group
Valley Freeway Group	Local Government Section
Statewide Project Management Group	Engineering Consultant Services
Districts (10)	Central Maintenance Group
FHWA	District Permits (9)
Bridge Group	Contracts and Specifications Section
Construction Group	Engineering Records

<u>Standard -- Revision</u>

6.10 - eliminate old Type B turnout

7.01 - Sh. 1- PCCP Joint Updates

10.01,10.02- revised general note

10.03 - Sh. 1 - complete update of drawing

10.03 - Sh. 2 – deleted

10.06 - update transition

10.20, 10.21, 10.22 2 Sh.-raise guard rail height

10.23 - deleted

10.24 - update thrie beam transition

10.28 2 Sh.- clarify posts, add note for application

10.29 2 Sh – clarify posts, increase guard rail height

10.30,10.31- raise thrie beam transition, add special block

10.32 – raise thrie beam, change sleeve requirement

10.45 – raise guard rail height

10.62, 10.63 – revised general note 8

10.65 – delete previous note 4

10.70, 10.71, 10.72, 10.73 (2 sh. each) – raise thrie beam 1”, revise sleeve

13.60, 13.75, 15.10, 15.20, 15.40- new welding specification

15.50 – revise grate dimensions

15.80, 15.81, 15.90, 15.91 (2 sh) – new welding specification

15.92 – revised catch basin frame

21.10 – add rebar for magnetic detection

21.20 – add notes for surveyor ID stamp

NO	DESCRIPTION OF REVISIONS	MADE BY	DATE
1	REISSUE STD	PNB	7/94
2			
3			
4			

CONSTRUCTION DRAWING SYMBOLS

	NEW FEATURES	EXISTING FEATURES
City Limits		
County Line		
Forest or Reservation Boundry		
Property Line		
Mid Section or Quarter Section Line		
Right of Way Line		
Section Line		
Sixteenth Line		
National, State Boundry		
Township or Range Line		
Temporary Construction Easement		
Mile Post Marker	MP	MP
Right of Way Marker		
Survey Monument		
Angle Point or PI		
Centerline, Station Marks		
Quarter Corner		

CONSTRUCTION DRAWING SYMBOLS

	NEW FEATURES	EXISTING FEATURES
Section Corner		
Survey Control Point		
Bench Mark		
Access Control		
Sidewalk, Curb & Gutter w/Depressed Curb (1"=50' or larger)	30' DC +25	
Curb & Gutter with Depressed Curb (1"=100')		
Curb, Single with Depressed Area		
Pavement and Sidewalk Edge		
Turnout	R	R
Top of Cut	C C	
Toe of Fill	F F	
Transition, Cut to Fill	C F	
Railroad Track (1"=50' or larger)		
Railroad Track (1"=100')		
Bank Protection		
Bridge		
Building	Floor Elevation 1984.68'	Floor Elevation 1984.68'

DESIGN APPROVED
Terry H. Otterness

APPROVED FOR DISTRIBUTION
Ronald C. Williams

STATE OF ARIZONA
DEPARTMENT OF TRANSPORTATION
DIVISION OF HIGHWAYS
STANDARD DRAWINGS

REV. 7/94

1 SYMBOL LEGEND

DRAWING NO. C-01.10

NO	DESCRIPTION OF REVISIONS	MADE BY	DATE
1	REISSUE STD	PNB	7/94
2			
3			
4			

CONSTRUCTION DRAWING SYMBOLS

	NEW FEATURES	EXISTING FEATURES
Catch Basin, Curb & Gutter		
Catch Basin, Median Dike		
Catch Basin, Off Roadway, Flush		
Catch Basin, Single Curb		
Cattle Guard		
Concrete Box Culvert		
Dike, Median		
Dike		
Downdrain, one way	+45 35'	
Downdrain, two way	+45 35'	
Manhole		
Manhole, Frame & Cover, Reset		
Retaining Wall		
Rock Riprap		
Spillway, one way	+45 35'	
Spillway, two way	+45 35'	

CONSTRUCTION DRAWING SYMBOLS

	NEW FEATURES	EXISTING FEATURES
Straight Hdwl w/End Sct, Pipe (1"=20') (All Dia)		
Straight Hdwl w/End Sct, Pipe (1"=50' or smaller) (Dia=42" and larger)		
Straight Hdwl w/End Sct, Pipe (1"=50' or smaller) (Dia=36" and smaller)		
"U" Hdwl w/End Sct, Pipe (1"=20') (All Dia)		
"U" Hdwl w/End Sct, Pipe (1"=50' or smaller) (Dia=42" and larger)		
"U" Hdwl w/End Sct, Pipe (1"=50' or smaller) (Dia=36" and smaller)		
Wing Hdwl w/End Sct, Pipe (1"=20') (All Dia)		
Wing Hdwl w/End Sct, Pipe (1"=50' or smaller) (Dia=42" and larger)		
Wing Hdwl w/End Sct, Pipe (1"=50' or smaller) (Dia=36" and smaller)		
"L" Hdwl w/End Sct, Pipe (1"=20') (All Dia)		
"L" Hdwl w/End Sct, Pipe (1"=50' or smaller) (Dia=42" and larger)		
"L" Hdwl w/End Sct, Pipe (1"=50' or smaller) (Dia=36" and smaller)		
Pipe Ext W/End Sct & Berm (1"=20') (All Dia)		
Pipe Ext W/End Sct & Berm (1"=20') (1"=50' or smaller) (Dia=42" and larger)		
Pipe Ext W/End Sct & Berm (1"=20') (1"=50' or smaller) (Dia=36" and smaller)		
Pipe Ext W/End Sct Roadway Widening (1"=20')	F F	

DESIGN APPROVED

APPROVED FOR DISTRIBUTION

STATE OF ARIZONA
DEPARTMENT OF TRANSPORTATION
DIVISION OF HIGHWAYS
STANDARD DRAWINGS

REV. 7/94

1 SYMBOL LEGEND

DRAWING NO. C-01.11

NO	DESCRIPTION OF REVISIONS	MADE BY	DATE
1	ADDED SYMBOL FOR GUARD RAIL EXTRUDER TERMINAL	PNB	10/95
2			
3			
4			

CONSTRUCTION DRAWING SYMBOLS

	NEW FEATURES	EXISTING FEATURES
Plan View, Bituminous Pavement		
Plan View, Concrete Pavement		
Plan View, Graded Surface		
Plan View, Obliterate Pavement		
Plan View, Wood		
Section, Asphaltic Concrete Friction Course		
Section, Bituminous Pavement		
Section, Concrete		
Section, Metal		
Section, Wood		
Section, Aggregate Base		
Section, Ground Line		
Ground Line Profile		
Barbed Wire Fence & Gate		
Chain Link Fence & Gate		
Guard Rail & Breakaway Cable Terminal		
① Guard Rail & Guard Rail Extruder Terminal		
Gas Line	G 3" G	G 3" G

CONSTRUCTION DRAWING SYMBOLS

	NEW FEATURES	EXISTING FEATURES
Irrigation Ditch, Concrete	IR IR	IR IR
Irrigation Ditch, Earth	IR IR	IR IR
Irrigation Line (1"=20')	IR 24" IR	IR 24" IR
Irrigation Line (1"=100')	IR 24" IR	IR 24" IR
Overhead Power/Joint Use Line	OP OP	OP OP
Overhead Telephone Line	OT OT	OT OT
Sanitary Sewer (1"=20')	S 8" S	S 8" S
Sanitary Sewer (1"=100')	S 8" S	S 8" S
Storm Drain (1"=20') & (1"=50')		SD 24" SD
Storm Drain (1"=100')		SD 36" SD
Street Light and With Mast Arm		
Telephone/Power Pedestal	T P	T P
Utility Pole with Down Guy and Anchor		
Underground Power/Joint Use Line	P P	P P
Underground Telephone Line	T T	T T
Water/Gas Meter Box	WM GM	WM GM
Water/Gas Valve	WV GV	WV GV

DESIGN APPROVED
Terry H. Otterness

APPROVED FOR DISTRIBUTION
Ronald C. Williams

STATE OF ARIZONA
DEPARTMENT OF TRANSPORTATION
DIVISION OF HIGHWAYS
STANDARD DRAWINGS

REV. 10/95

SYMBOL LEGEND

DRAWING NO. C-01.12

NO	DESCRIPTION OF REVISIONS	MADE BY	DATE
1	MODIFIED SYMBOL	PNB	10/95
2			
3			
4			

CONSTRUCTION DRAWING SYMBOLS

	NEW FEATURES	EXISTING FEATURES
Water Line	W 8" W	W 8" W
Drainage Channel		
Drainage Ditch	Drainage Ditch	Drainage Ditch
Major Wash		NAME
Minor Wash		
℄ Grade, Profile		
Hedge		
Palm Tree		
Shrubbery		
Unclassified Tree		
Sign, Single Post		
Sign, Multiple Post		
Dimensions		
Visible Outlines, Sections, etc...		
Index Contour Line	8650	8650
① Intermediate Contour Line		

CONSTRUCTION DRAWING SYMBOLS

	NEW FEATURES	EXISTING FEATURES
① Depressed Index Contour Line	8650	8650
Depressed Intermediate Contour Line		
Block Wall (1"=20')		
Median Barrier		
Fire Hydrant	FH	FH
Standpipe		SP
Transmission Tower		
Windmill		
Mail Box		
Flag Pole		
North Arrow		N

DESIGN APPROVED

Terry H. Ottemus

APPROVED FOR DISTRIBUTION

Ronald C. Williams

STATE OF ARIZONA
DEPARTMENT OF TRANSPORTATION
DIVISION OF HIGHWAYS
STANDARD DRAWINGS

REV. 10/95

SYMBOL LEGEND

DRAWING NO. C-01.13

NO	DESCRIPTION OF REVISIONS	MADE BY	DATE
1	CORRECTED SPELLING	PNB	10/95
2	DELETED ABBREVIATION	PNB	10/95
3	REVISED ABBREVIATION	PNB	10/95
4	ADDED ABBREVIATION	PNB	10/95

WORDS	ABBREVIATION
A	
Abutment	Abt
Acceleration	Acc
Acres	Ac
Aggregate	Agg
Aggregate Base	AB
Ahead	AHD, Ahd
Alternate	Alt
Aluminum	Al
American Association of State Highway and Transportation Officials	AASHTO
American Concrete Institute	ACI
American Institute of Steel Construction	AISC
(1) American Road and Transportation Builders Association	ARTBA
American Society for Testing Materials	ASTM
Amount	Amt
Approach	Appr
Approximate	Approx
Asphalt	Asph
Asphalt Rubber	AR
Asphalt Rubber ACFC	ARACFC
Asphaltic Concrete	AC
Asphaltic Concrete Base	ABC
Asphaltic Concrete Friction Course	ACFC
Asphaltic Concrete Surface Course	ACSC
Avenue	AVE, Ave
Average Daily Traffic	ADT
B	
Back	BK, Bk
Backfill	Bkfl
Balance	Bal
(2) Bank Protection	Bank Prt
Barbed Wire	BW
Bearing	Brg
Begin	Bgn
Begin Curb Return	BCR
Begin Full Super	BFS
Bench Mark	BM
Bevel or Beveled	Bev
Bituminous	Bit
Bituminous Mixture	Bit Mix

WORDS	ABBREVIATION
B (cont)	
Bituminous Surface Treatment	BST
Bituminous Treated Base	BTB
Black Steel Pipe	BSP
Borrow	Bor
Boulevard	BLVD, Blvd
(3) Boundary	Bdry
Brass Cap	BC
Breakaway Cable Terminal	BCT
Bridge	Br
Building	Bldg
C	
Calculated	Calc
Cast-in-Place	C-I-P
Cast Iron	CI
Cast Iron Pipe	CIP
Catch Basin	CB
Cattle Guard	CG
Cement	Cem
Cement Treated Base	CTB
Center	Ctr
Center Line	℄
Center to Center	C to C
Channel	Chan
Class	Cl
Clear	Clr
Column	Col
Compact or Compaction	Comp
Complete In Place	C in P
Concrete	Conc
Concrete Box Culvert	CBC
Concrete Treated Base	CTB
Connection	Conn
Conduit	Cond
Construct or Construction	Cst
Continous	Cont
Coordinate	Coord
Corner	Cor
Correction	Corr
Corrugated Aluminum Pipe	CAP
Corrugated Aluminum Pipe Arch	CAPA

WORDS	ABBREVIATION
C (cont)	
(4) Corrugated High Density Polyethylene Plastic Pipe	CHDPEPP
Corrugated Steel Pipe	CSP
Corrugated Steel Pipe Arch	CSPA
County	Co
Crossing	X-ING
Cross Section	X-SECT
Crown	Cr
Cubic	Cu
Cubic Feet Per Second	CFS
Cubic Yard or Cubic Yards	CY, Cu Yd
(3) Culvert	Culv
Curb and Gutter	C&G
Curve to Spiral	CS
D	
Deceleration	Dcl
Deflection	Def
Deflection of Total Curve	I
Degree of Curve	D
Delineator	Del
Delta	Δ
Depressed Curb	DC
Design Speed	Des Spd
Detail	Dtl
Diameter	Dia
Distance	Dist
Division	Div
Double	Dbl
Drain or Drainage	Drn
Drainage Area	DA
Drawing	Dwg
Drive	Dr
Driveway	Dwy
Ductile Iron Pipe	DIP
E	
Each	Ea
Easement	Esmt
East	E
Eastbound	EB

DESIGN APPROVED Terry H. Otterness	STATE OF ARIZONA DEPARTMENT OF TRANSPORTATION DIVISION OF HIGHWAYS STANDARD DRAWINGS	REV. 10/95
APPROVED FOR DISTRIBUTION Ronald C. Williams	GENERAL ABBREVIATIONS	DRAWING NO. C-01.30

NO	DESCRIPTION OF REVISIONS	MADE BY	DATE
1	REVISED SPELLING	PNB	10/95
2	REVISED ABBREVIATION	PNB	10/95
3	ADDED ABBREVIATION	PNB	10/95
4			

	WORDS	ABBREVIATION
	E (cont)	
	Edge of Pavement	EP
	Electric, Electricity	Elec, E
	Elevation	Elev
	Embankment	Emb
	End Curb Return	ECR
1	End Full Superelevation	EFS
	Engineer	Engr
	Entrance	Ent
	Equation	EQ, Eq
	Estimate	Est
2	Excavation	Exc
	Existing	Exst
	Expansion Joint	Exp Jt
	Extend or Extension	Ext
	External	Ext
	F	
	Federal	Fed
	Feet or Foot	Ft
	Feet per Foot	′/″
	Feet Per Second	FPS
	Figure	Fig
	Finish	Fin
	Floor	Fl
	Flow Line	FL
	Footing	Ftg
	Forest	Fst
	Found	Fnd
	Frame	Fr
	Freeway	Fwy
	Frontage	Frt
	Furnish or Furnished	Furn
	Future	Fut
	G	
	Gas	G
	Gas Meter	GM
	Gas Valve	GV
	Galvanize or galvanized	Galv
	Gauge	Ga
2	Government	Gov't
	Grade	Gr
	Grade Seperation	GS

	WORDS	ABBREVIATION
	G (cont)	
	Ground	Gnd
3	Ground Compaction	Gnd Comp
	Grubbing	Grb
	Guard	Grd
	Guard Rail	GR
3	Guard Rail Extruder Terminal	GET
	H	
	Headwall	Hdwl
	Height	Ht, H, h
	Height of Instrument	HI
	Head Water	HW
	Highway	Hwy
2	Horizontal	Horz
	Horizontal Elliptical Reinforced Concrete Pipe	HERCP
	I	
	Improvement	Impr
	Inch or Inches	In
	Include, Included or Inclusive	Incl
	Inside Diameter	ID
	Invert	Inv
	Irrigation	Irr
	J	
	Joint	Jt
	Junction	Jct
	L	
	Laboratory	Lab
	Lateral	Lat
	Left	Lt
	Length or Length of Curve	L
3	Length of Normal Crown Removal	L_c
3	Length of Spiral	Ls
3	Length of Superelevation Runoff	L_s
	Line	Ln
	Linear or Lineal	Lin
	Linear Feet	Lin Ft
	Location	Loc
	M	
	Manhole	MH
	Material	Mtl
	Maximum	Max
	Median	Med

	WORDS	ABBREVIATION
	M (cont)	
	Mile or Miles	MI
	Mile Post	MP
	Miles Per Hour	MPH
	Mineral Aggregate	MA
	Minimum	Min
	Miscellaneous	Misc
	Modify or Modified	Mod
	Monument	Mon
	Mountain	Mt
	N	
	National	Natl
	Non-Reinforced Cast-In-Place Concrete Pipe	NRCIPCP
	Normal Crown	NC
	North	N
	Northbound	NB
	Number	No
	O	
	Obliterate	Obl
	Original	Orig
	Outside Diameter	OD
	Overhead	OH
	Overpass	OP
	P	
	Parkway	Pkwy
	Pavement	Pvmt
	Pedestrian	Ped
	Place	Pl
	Point	Pt
	Point of Compound Curvature	PCC
	Point of Curvature	PC
	Point of Intersection	PI
	Point of Reverse Curvature	PRC
	Point of Tangency	PT
	Point on Curve	POC
1	Point on Semi-Tangent	POST
	Point on Spiral	POS
	Point on Tangent	POT
	Polyethylene	PE

DESIGN APPROVED

APPROVED FOR DISTRIBUTION

STATE OF ARIZONA
DEPARTMENT OF TRANSPORTATION
DIVISION OF HIGHWAYS
STANDARD DRAWINGS

REV. 10/95

GENERAL ABBREVIATIONS

DRAWING NO. C-01.31

NO	DESCRIPTION OF REVISIONS	MADE BY	DATE
1	REVISED SPELLING	PNB	10/95
2	DELETED TWO ABBREVIATIONS	PNB	10/95
3	REVISED ABBREVIATION	PNB	10/95
4			

WORDS	ABBREVIATION
P (cont)	
Polyvinyl Chloride	PVC
Portland Cement Concrete	PCC
Portland Cement Concrete Pavement	PCCP
Pounds	Lbs
Pounds Per Square Inch	PSI
Preliminary	Prelim
(1) Prestress, Prestressed or Prestressing	PS
Project	Prj
Property Line	P/L
Proposed	Prop
Protection	Prt
Provision or Provide	Prv
Q	
Quadrant	Quad
Quantity or Quantities	Quan
Quantity of Drainage Runoff	Q
R	
Radius	R
Railroad	RR
Range	R
Reconstruct	Recst
Reference	Ref
Reinforced or Reinforcing	Reinf
Reinforced Concrete	RC
Reinforced Concrete Pipe	RCP
Reinforced Concrete Pipe Arch	RCPA
Reinforcing Bar	Rebar
Relocate, Relocation or Relocated	Reloc
Remove	Rem
Required	Reqd
Reservation	Resv
Residence	Res
Retain or Retaining	Ret
Revised or Revision	Rev
Right	Rt
Right of Way	R/W
Road	Rd
Roadway	Rdwy
Route	Rte
Rubber Gasket Reinforced Concrete Pipe	RGRCP

WORDS	ABBREVIATION
S	
Salvage	Salv
Section	Sct
Select Material	SM
Sheet	Sh
Shoulder	Shldr
Shrinkage	Shr
Sidewalk	Swk
(2) Sight Distance-Stopping	SD_S
Single	Sgl
Skew	Sk
South	S
Southbound	SB
Special	Spcl
Specification	Spec
Spiral Rate of Change	a
Spiral To Curve	SC
Spiral To Tangent	ST
Square	Sq
Square Feet	Sq Ft
Square Yard	Sq Yd
Standard	Std
State Route	SR
Station	Sta
Street	St
Structure or Structural	Str
Subdivision	Subdiv
Subgrade	SG
Subgrade Seal	SS
(3) Superelevation	e or Super
Surface	Surf
Survey	Sur
Swell	Sw
(1) Symmetrical	Sym
T	
Tangent	Tan
Tangent Length	T
Tangent to Spiral	TS
Telegraph	Tlg

WORDS	ABBREVIATION
T (cont)	
Telephone	Tel
Temporary	Temp
Temporary Construction Easement	TCE
Timber	Tbr
Top of Curb	TC
Topography	Topo
Township	T
Traffic Interchange	TI
Transition	Trns
Turning Point	TP
Turnout	TO
Typical	Typ
U	
Underground	Ugnd
Underpass	UP
V	
Variable	Var
Vertical	Vert
Vertical Curve	VC
Vertical Elliptical Reinforced Concrete Pipe	VERCP
Vertical Point of Intersection	VPI
Viaduct	Via
Vitrified Clay Pipe	VCP
Volume	Vol
W	
Water	W
Water Meter	WM
Water Valve	WV
Welded Wire Fabric	WWF
West	W
Westbound	WB
Western Wood Products Association	WWPA
Wide or Width	W
Wood	Wd
Y	
Yard	Yd

DESIGN APPROVED Terry H. Otterness	STATE OF ARIZONA DEPARTMENT OF TRANSPORTATION DIVISION OF HIGHWAYS STANDARD DRAWINGS	REV. 10/95
APPROVED FOR DISTRIBUTION Ronald C. Williams	GENERAL ABBREVIATIONS	DRAWING NO. C-01.32

NO	DESCRIPTION OF REVISIONS	MADE BY	DATE
1	ADDED SLOPE ROUNDING DETAIL	PNB	1/93
2	MODIFIED SHOULDER WEDGE DETAIL	TC	1/93
3			
4			

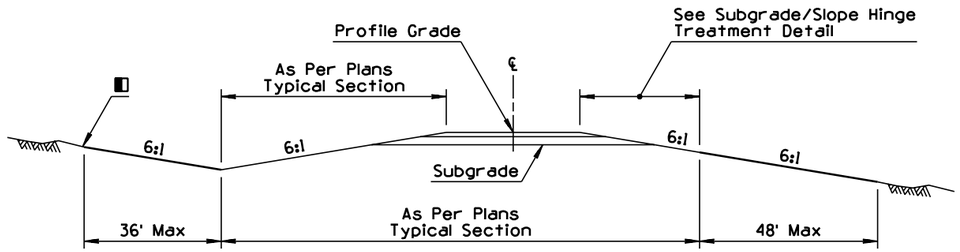

MINIMUM SLOPES

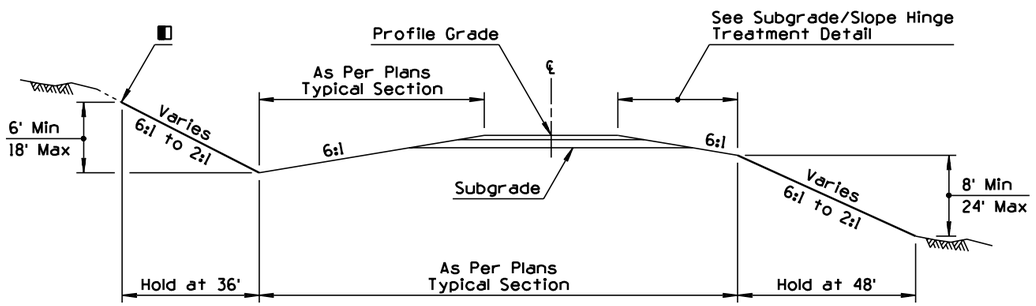

INTERMEDIATE SLOPES

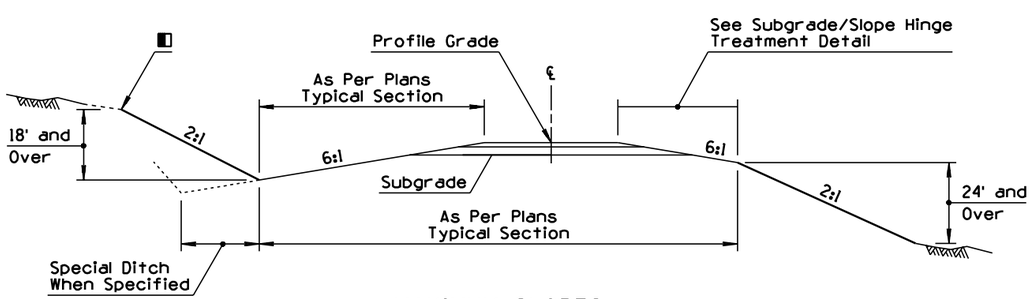

MAXIMUM SLOPES

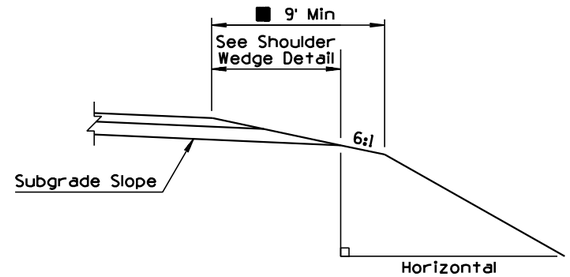

SUBGRADE/SLOPE HINGE TREATMENT DETAIL

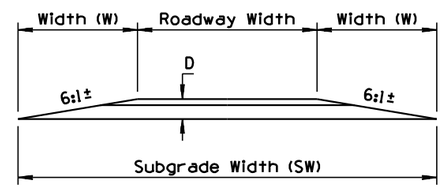

W = D x Slope (6:1)
D = Str Sec Depth (ft) excluding ACFC
SW = 2 x W + Roadway Width

② SHOULDER WEDGE DETAIL

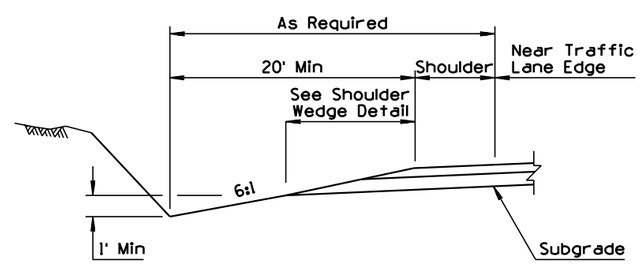

MINIMUM DITCH CONDITIONS DETAIL

GENERAL NOTES

1. Roadway width, cut ditch width, cross slope, and pavement structure section will be shown on project plans.
2. Design highwater should not be located above the subgrade in unpaved ditch.
3. Pavement structure slope is nominal. Actual slope is controlled by (D). See Shoulder Wedge Detail.
4. Slopes beyond the pavement structure, such as embankment and cut slopes, are relative to horizontal.
5. For slope controls within interchange areas, see project plans.
6. When median slopes intersect, see project plans for controls.
7. These slopes are intended to be used with new or reconstructed roadways.

■ The 9' min is required when guard rail is utilized on the project. Treatment shall be uniform throughout the project length. The 9' requirement may be waived under special conditions where guard rail is not utilized. The 9' min shall not be waived when the thickness of structure section has not been finalized.

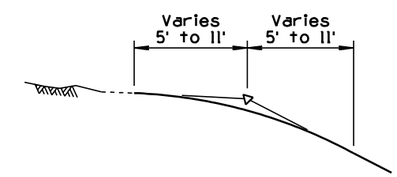

① ◧ SLOPE ROUNDING DETAIL

Except in solid rock, or as directed by the Engineer, the intersection of roadway cut slopes with the ground surfaces shall be rounded.
For cuts up to 6', use 5' semi-tangents for slope rounding. For each additional foot of cut add 1' to semi-tangent to 11' maximum.

DESIGN APPROVED: Terry H. Otterness	STATE OF ARIZONA DEPARTMENT OF TRANSPORTATION DIVISION OF HIGHWAYS STANDARD DRAWINGS	REV. 1/93
APPROVED FOR DISTRIBUTION: Ronald C. Williams	① SLOPES INTERSTATE	DRAWING NO. C-02.10

NO	DESCRIPTION OF REVISIONS	MADE BY	DATE
1	ADDED SLOPE ROUNDING DETAIL	PNB	1/93
2	CORRECTED FILL HEIGHT CALLOUT	TC	1/93
3	MODIFIED SHOULDER WEDGE DETAIL	TC	1/93
4			

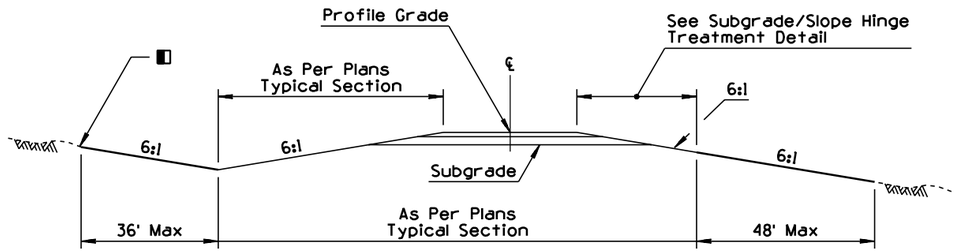

MINIMUM SLOPES

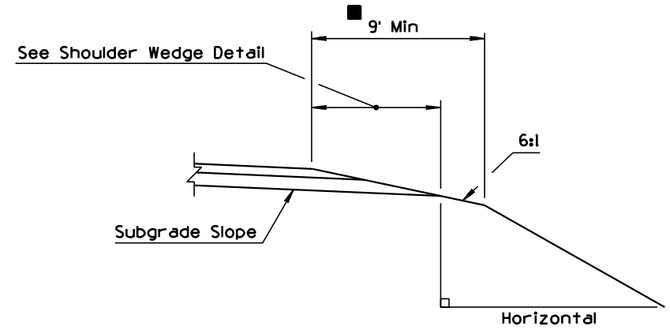

SUBGRADE/SLOPE HINGE TREATMENT DETAIL

GENERAL NOTES

1. Roadway width, cut ditch width, cross slope, and pavement structure section will be shown on project plans.
2. Design highwater should not be located above the subgrade in unpaved ditch.
3. Pavement structure slope is nominal. Actual slope is controlled by (D). See Shoulder Wedge Detail.
4. Slopes beyond the pavement structure, such as embankment and cut slopes, are relative to horizontal.
5. When median slopes intersect, see project plans for controls.
6. These slopes are intended to be used with new or reconstructed roadways.

■ The 9' min is required when guard rail is utilized on the project. Treatment shall be uniform throughout the project length. The 9' requirement may be waived under special conditions where guard rail is not utilized. The 9' min shall not be waived when the thickness of structure section has not been finalized.

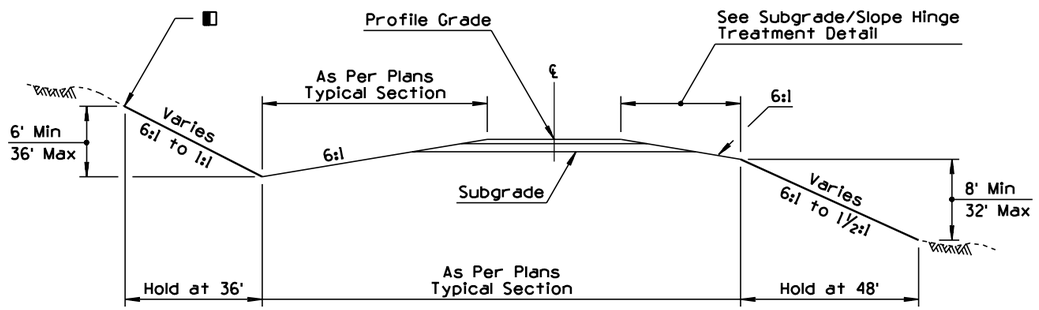

INTERMEDIATE SLOPES

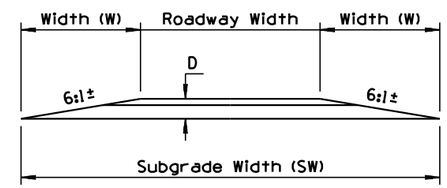

W = D x Slope (6:1)
D = Str Sec Depth (ft) excluding ACFC
SW = 2 x W + Roadway Width

③ SHOULDER WEDGE DETAIL

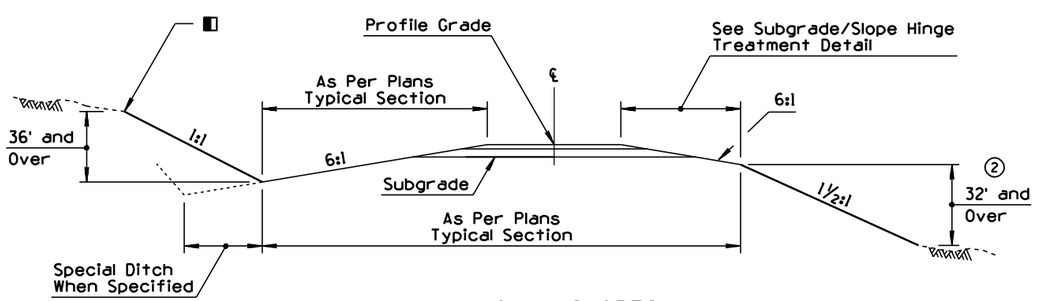

MAXIMUM SLOPES

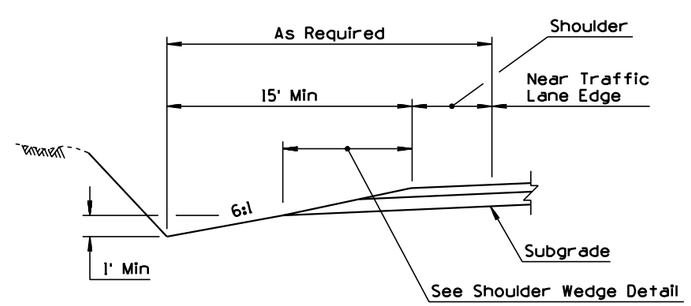

MINIMUM DITCH CONDITIONS DETAIL

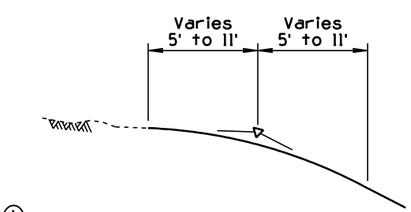

① ■ SLOPE ROUNDING DETAIL

Except in solid rock, or as directed by the Engineer, the intersection of roadway cut slopes with the ground surfaces shall be rounded.
For cuts up to 6', use 5' semi-tangents for slope rounding. For each additional foot of cut add 1' to semi-tangent to 11' maximum.

DESIGN APPROVED	STATE OF ARIZONA DEPARTMENT OF TRANSPORTATION DIVISION OF HIGHWAYS STANDARD DRAWINGS	REV.
APPROVED FOR DISTRIBUTION	SLOPES PRIMARY ROADWAYS	DRAWING NO. C-02.20

NO	DESCRIPTION OF REVISIONS	MADE BY	DATE
1	REVISED 9' DIMENSION TO 6'	PNB	10/95
2			
3			
4			

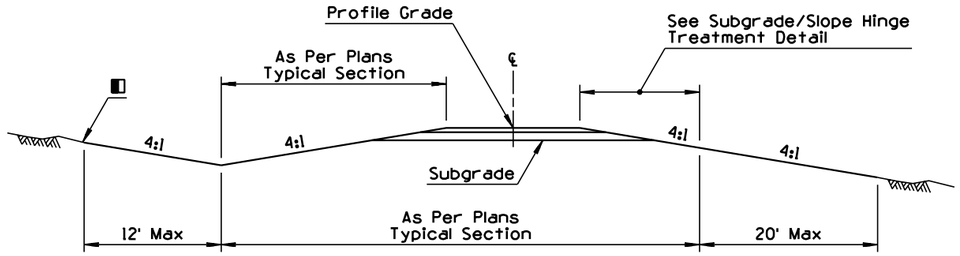

MINIMUM SLOPES

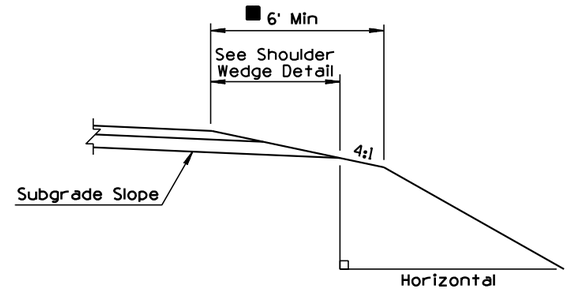

SUBGRADE/SLOPE HINGE TREATMENT DETAIL

GENERAL NOTES

1. Roadway width, cut ditch width, cross slope, and pavement structure section will be shown on project plans.
2. Design highwater should not be located above the subgrade in unpaved ditch.
3. Pavement structure slope is nominal. Actual slope is controlled by (D). See Shoulder Wedge Detail.
4. Slopes beyond the pavement structure, such as embankment and cut slopes, are relative to horizontal.
5. These slopes are intended to be used with new or reconstructed roadways.

(1) ■ The 6' min is required when guard rail is utilized on the project. Treatment shall be uniform throughout the project length. The 6' requirement may be waived under special conditions where guard rail is not utilized. The 6' min shall not be waived when the thickness of structure section has not been finalized.

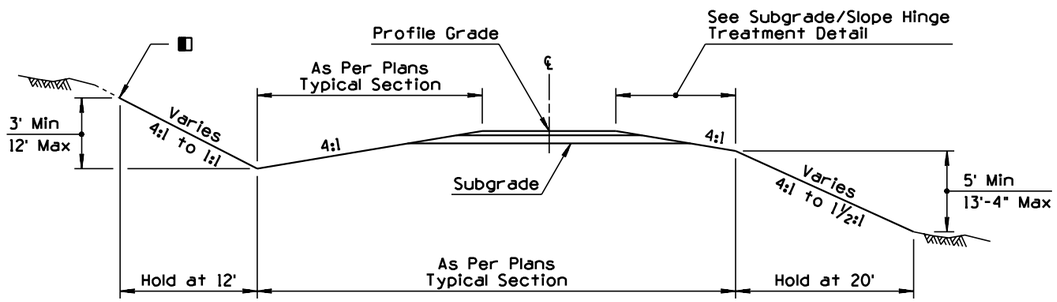

INTERMEDIATE SLOPES

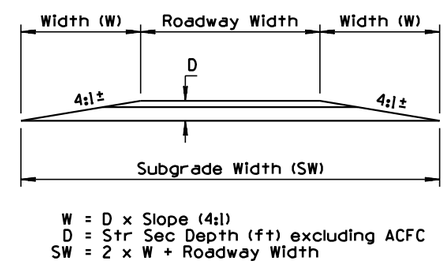

W = D x Slope (4:1)
D = Str Sec Depth (ft) excluding ACFC
SW = 2 x W + Roadway Width

SHOULDER WEDGE DETAIL

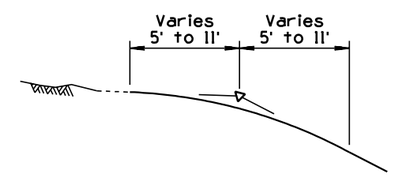

■ SLOPE ROUNDING DETAIL

Except in solid rock, or as directed by the Engineer, the intersection of roadway cut slopes with the ground surfaces shall be rounded.
For cuts up to 6', use 5' semi-tangents for slope rounding. For each additional foot of cut add 1' to semi-tangent to 11' maximum.

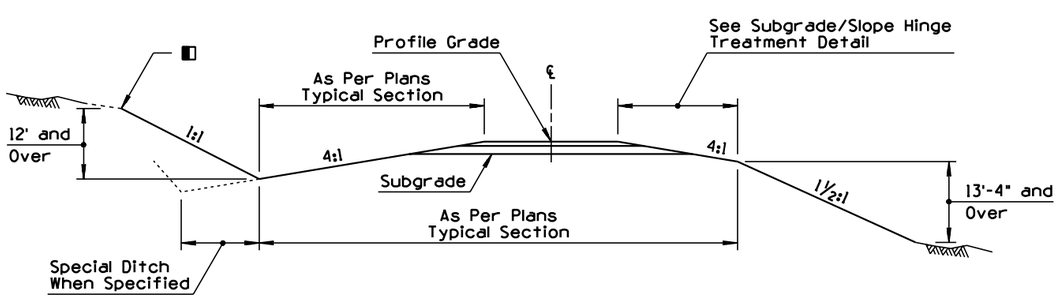

MAXIMUM SLOPES

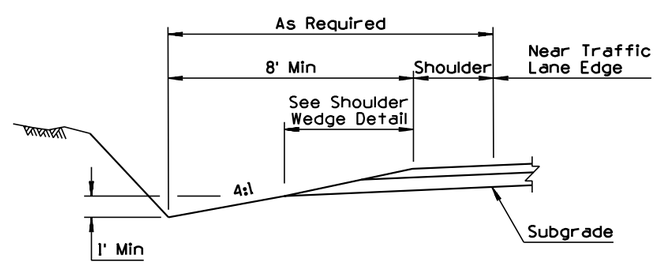

MINIMUM DITCH CONDITIONS DETAIL

DESIGN APPROVED Terry H. Otterness	STATE OF ARIZONA DEPARTMENT OF TRANSPORTATION DIVISION OF HIGHWAYS STANDARD DRAWINGS	REV. 10/95
APPROVED FOR DISTRIBUTION Ronald C. Williams	SLOPES SECONDARY/MISC ROADWAYS	DRAWING NO. C-02.30

NO	DESCRIPTION OF REVISIONS	MADE BY	DATE
1	ADDED ABBREVIATION TO LEGEND	PNB	10/95
2	REPLACED TEXT WITH ABBREVIATION	PNB	10/95
3			
4			

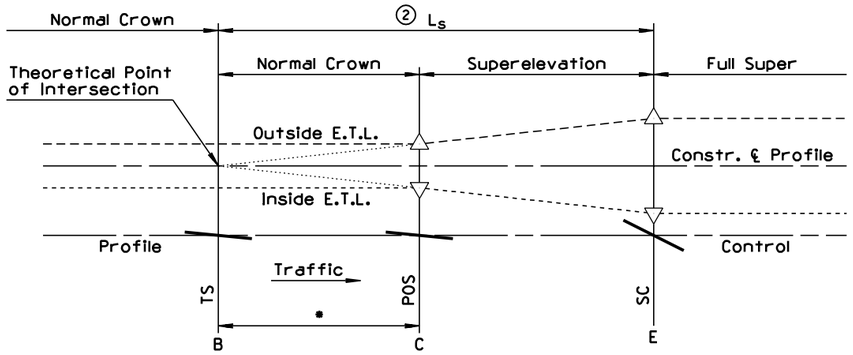

SPIRAL CURVE TRANSITION

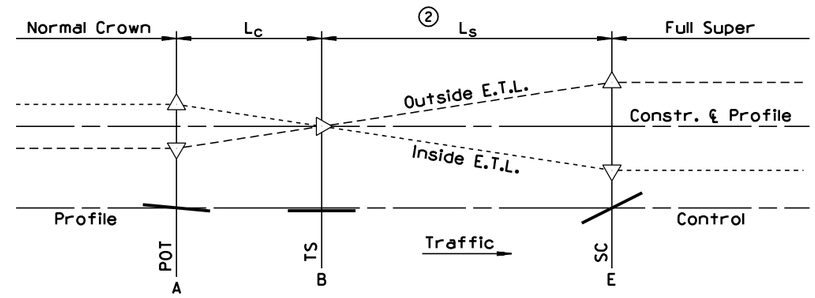

SPIRAL CURVE TRANSITION

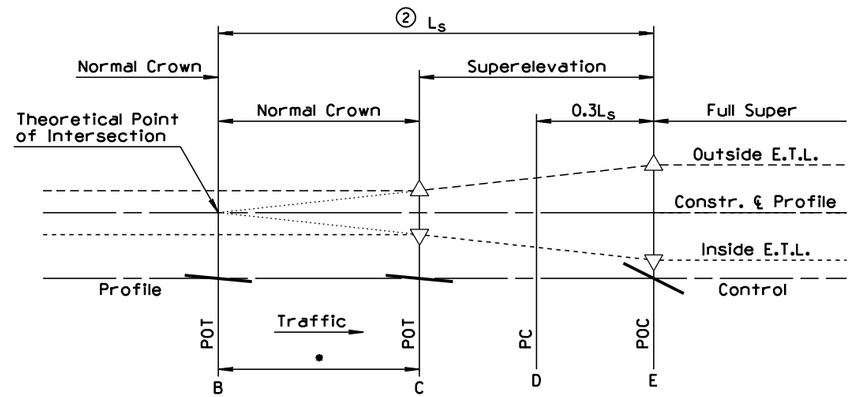

CIRCULAR CURVE TRANSITION

1-WAY ROADWAY-AXIS OF ROTATION AT CONSTR. ℄
HIGH POINT OF NORMAL CROWN ON OUTSIDE OF CURVE
RIGHT TURNING ROADWAY

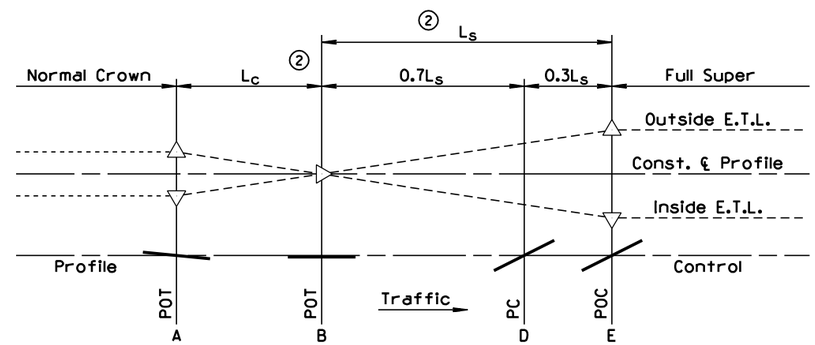

CIRCULAR CURVE TRANSITION

1-WAY ROADWAY-AXIS OF ROTATION AT CONSTR. ℄
HIGH POINT OF NORMAL CROWN ON INSIDE OF CURVE
LEFT TURNING ROADWAY

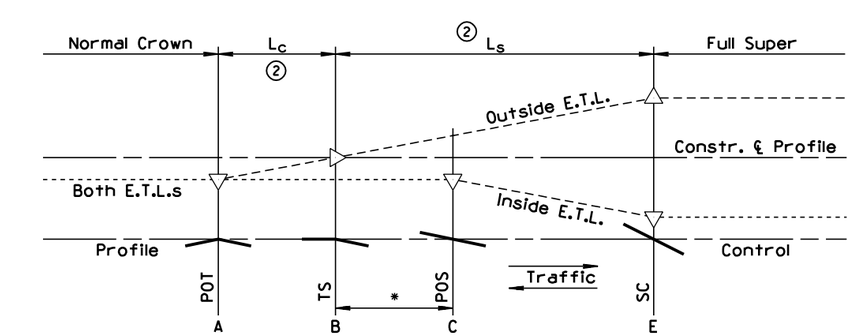

SPIRAL CURVE TRANSITION

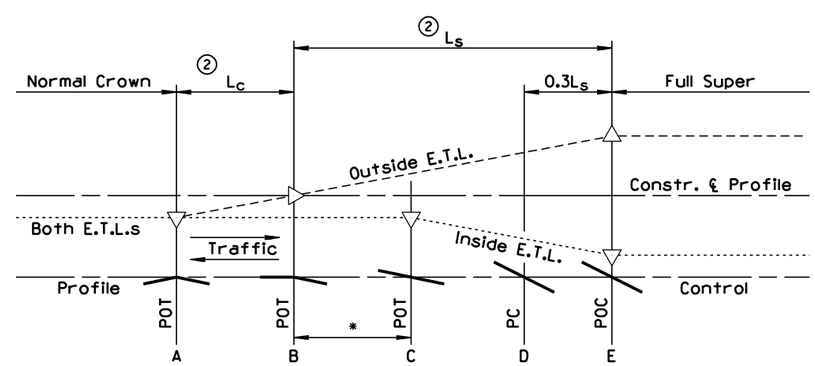

CIRCULAR CURVE TRANSITION

2-WAY ROADWAY-AXIS OF ROTATION AT ℄
(FOR OPPOSITE DEFLECTING CURVE, E.T.L. PROFILES ARE REVERSED)

GENERAL NOTES

1. Round edge profile intersections with vertical curves having an approximate length in feet equal to the design speed in m.p.h.
2. For main roadway curves without spirals, L_s is the same as for spiraled curves but with 0.7 L_s on tangent and 0.3L_s on curve.
3. Shoulders transition with the adjacent travel lane when their normal cross slopes are the same.
4. If shoulders have a normal cross slope steeper than the adjacent lane, the shoulder transition will begin at a different point than that of the adjacent lane. See shoulder transition detail.

LEGEND

A - Point at which adverse crown removal begins.

B - Point at which superelevation transition begins.

C - Point of eqality between superelevation and normal crown

D - P.C. location for circular curve transition.

E - Point at which full superelevation is reached.

① L_c - Length of Normal Crown Removal

① L_s - Length of Superelevation Runoff

E.T.L. - Edge of traveled lane

* - Distance BC = (NC) $(L_s)/e$

◒ - Length of Shoulder Transition = (NC) (L_s)/(NC of shoulder)

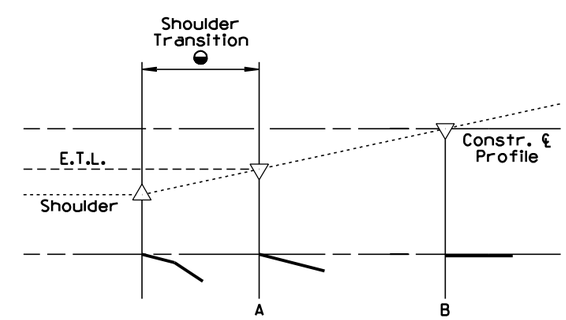

SHOULDER TRANSITION DETAIL

DESIGN APPROVED	STATE OF ARIZONA DEPARTMENT OF TRANSPORTATION DIVISION OF HIGHWAYS STANDARD DRAWINGS	REV. 10/95
APPROVED FOR DISTRIBUTION	SUPERELEVATION DISTRIBUTION	DRAWING NO. C-02.50

NO	DESCRIPTION OF REVISIONS	MADE BY	DATE
1	REMOVED NOTE	PNB	3/94
2	ADDED SLOPE ROUNDING	PNB	3/94
3			
4			

GENERAL NOTES

1. Dimensions of ditches shall be shown on the plans, as bottom width, depth and length.
2. Ditches shall be constructed with a minimum grade to prevent erosion. Ditch outlet treatment shall be as provided on plans.

①

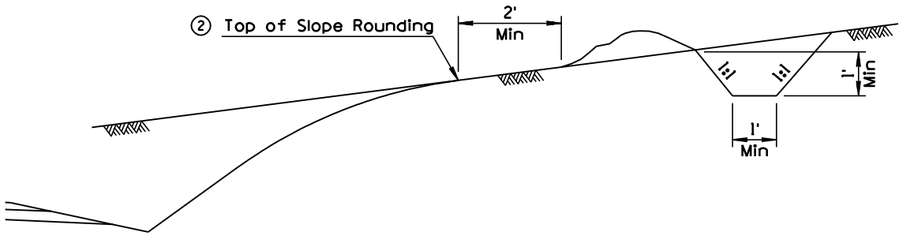

CROWN DITCH

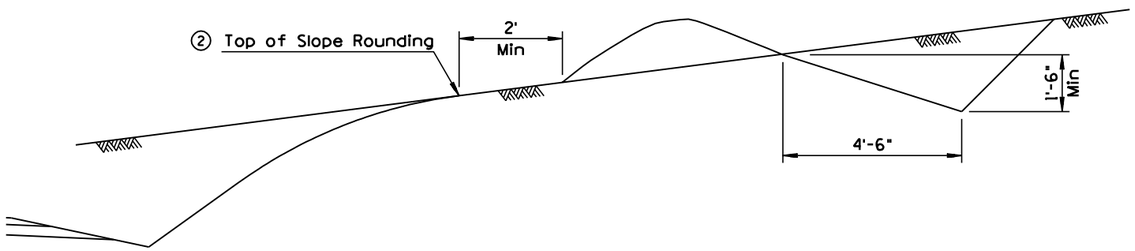

GRADER DITCH

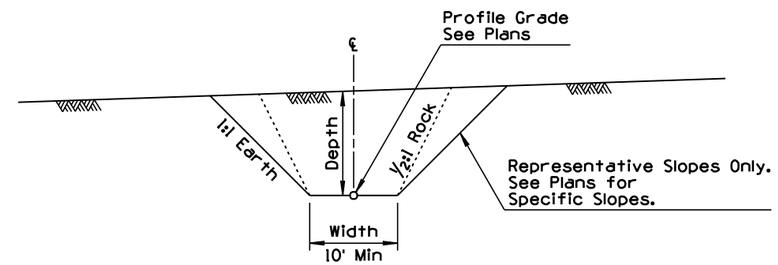

CHANNEL

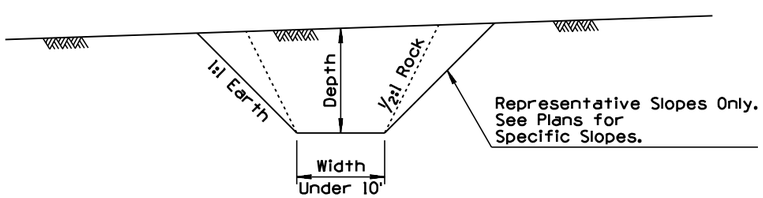

DITCH

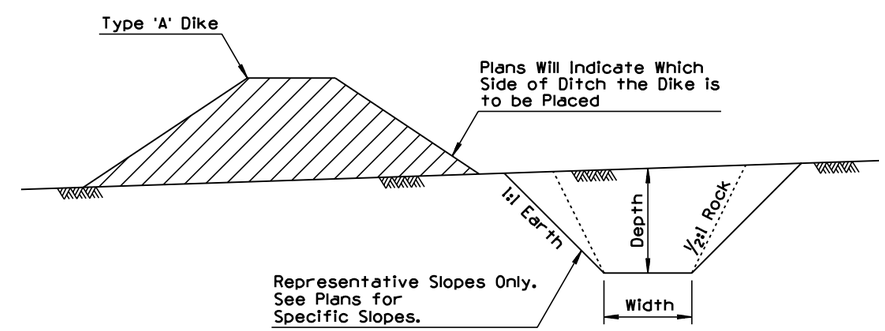

DITCH AND DIKE

DESIGN APPROVED Terry H. Ottemas	STATE OF ARIZONA DEPARTMENT OF TRANSPORTATION DIVISION OF HIGHWAYS STANDARD DRAWINGS	REV. 3/94
APPROVED FOR DISTRIBUTION Ronald C. Williams	DITCHES, CHANNELS, DIKES AND BERMS DITCHES AND CHANNELS	DRAWING NO. C-03.10 Sheet 1 of 5

NO	DESCRIPTION OF REVISIONS	MADE BY	DATE
1	MODIFIED SLOPE	PNB	3/94
2	MODIFIED INSTALLATION DETAIL	PNB	3/94
3	ADDED PERSPECTIVE VIEW	PNB	3/94
4			

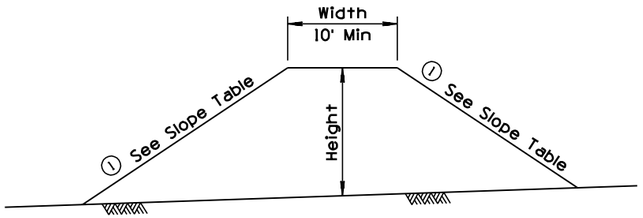

TYPE A DIKE

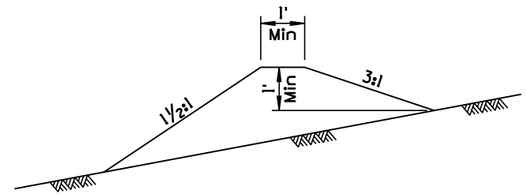

CROWN DIKE

GENERAL NOTES

1. Dimensions of dikes shall be shown on the plans as top width, height, length and top of dike elevation.
2. Dike side slopes outside the recovery area shall be shown on the plans.

SLOPE TABLE		
Inside Recovery Area	Outside Recovery Area	
	Desirable	Maximum
10:1	4:1	1½:1

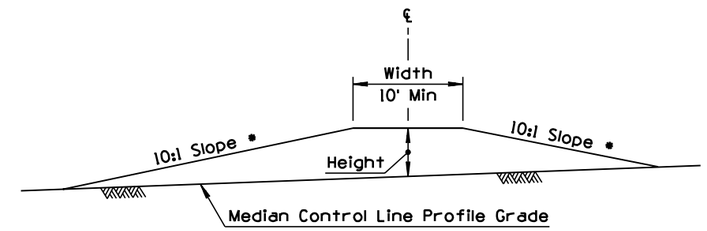

TYPE B TRANSVERSE MEDIAN DIKE

* Slope relative to grade of median at intersection with toe

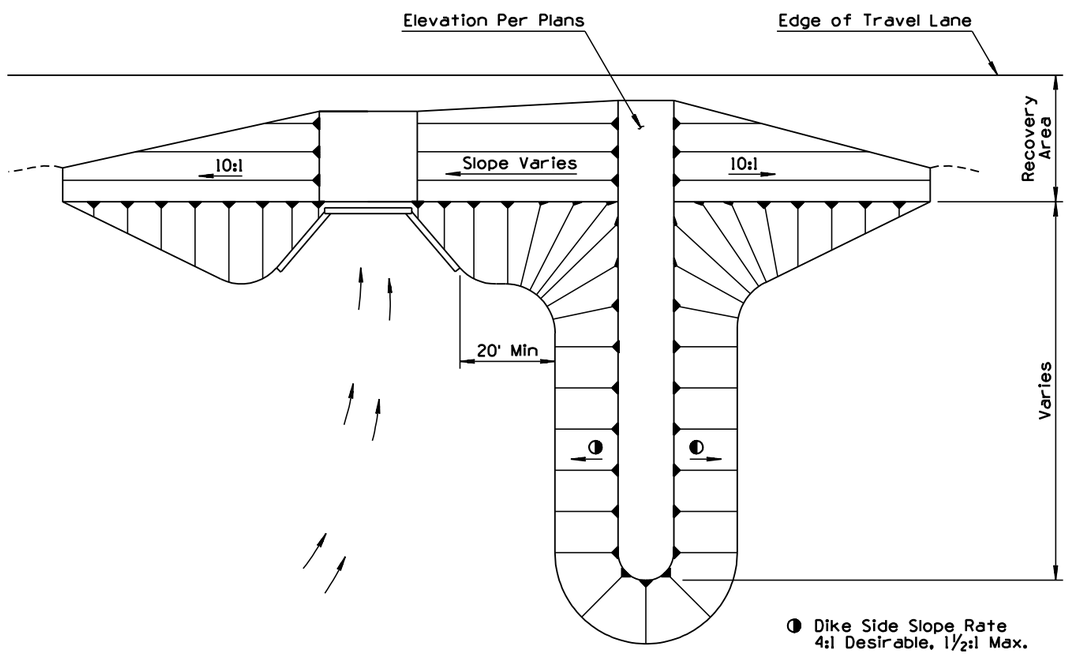

② TYPICAL DIKE INSTALLATION AT STRUCTURE

Place dikes at structures to create water cushion.

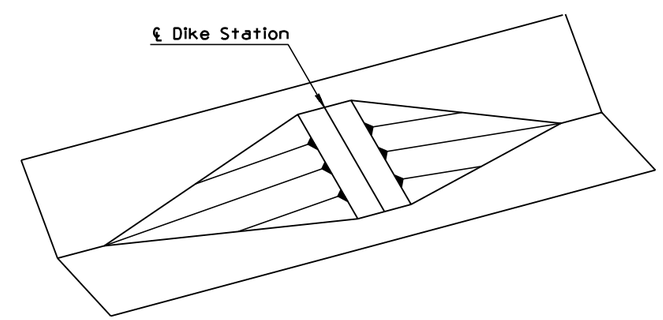

③ TYPICAL TRANSVERSE MEDIAN DIKE INSTALLATION

DESIGN APPROVED Terry H. Otterness	STATE OF ARIZONA DEPARTMENT OF TRANSPORTATION DIVISION OF HIGHWAYS STANDARD DRAWINGS	REV. 3/94
APPROVED FOR DISTRIBUTION Ronald C. Williams	DITCHES, CHANNELS, DIKES AND BERMS DIKES	DRAWING NO. C-03.10 Sheet 2 of 5

NO	DESCRIPTION OF REVISIONS	MADE BY	DATE
1			
2			
3			
4			

GENERAL NOTES

1. Dimensions for ditch dikes shall be shown on the plans as dike stationing, height, length, dike back slope and top of dike elevation.
2. Dimensions for cut ditch widening shall be shown on the plans as beginning and ending stations.

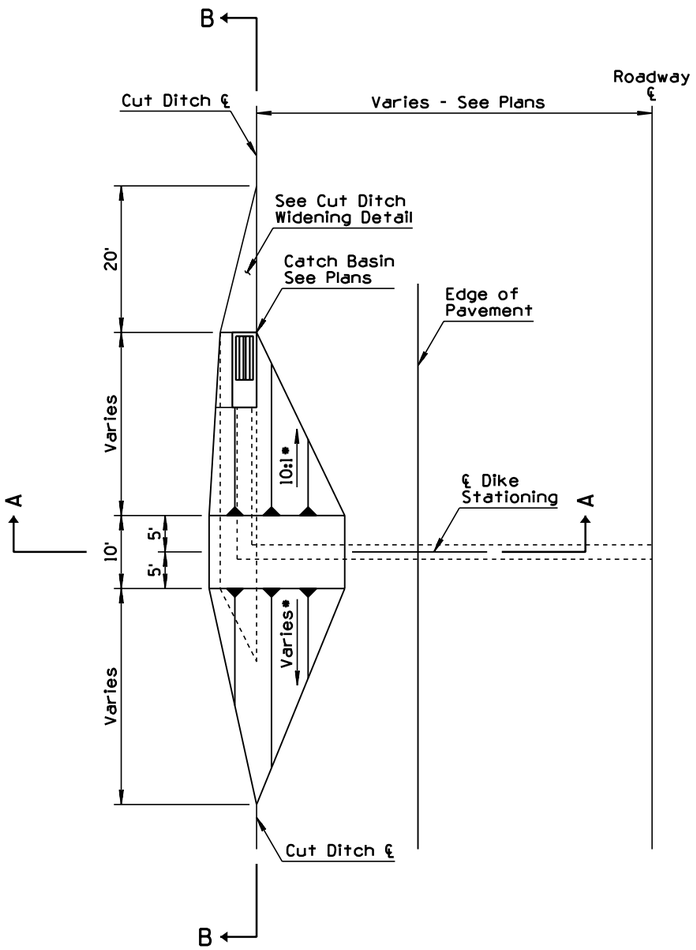

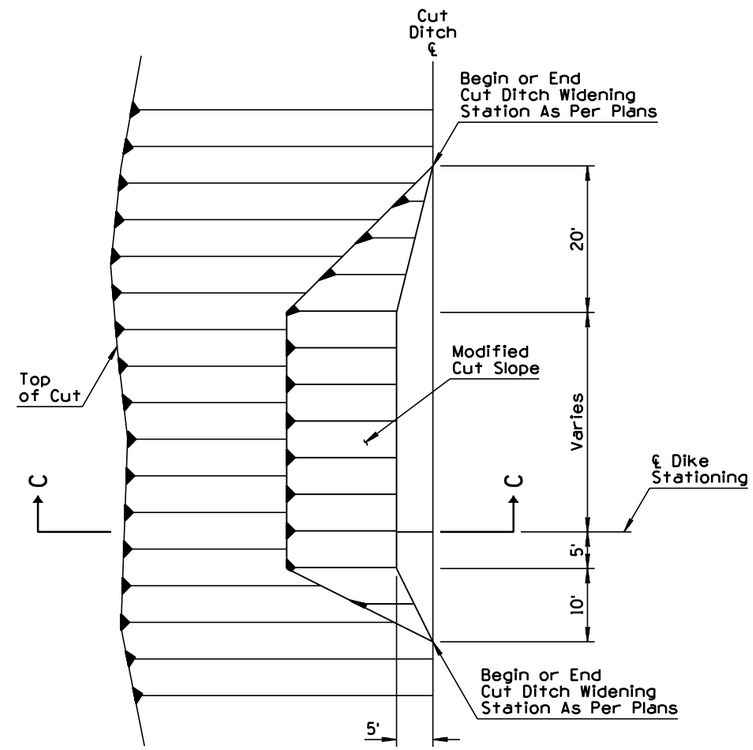

CUT DITCH WIDENING DETAIL

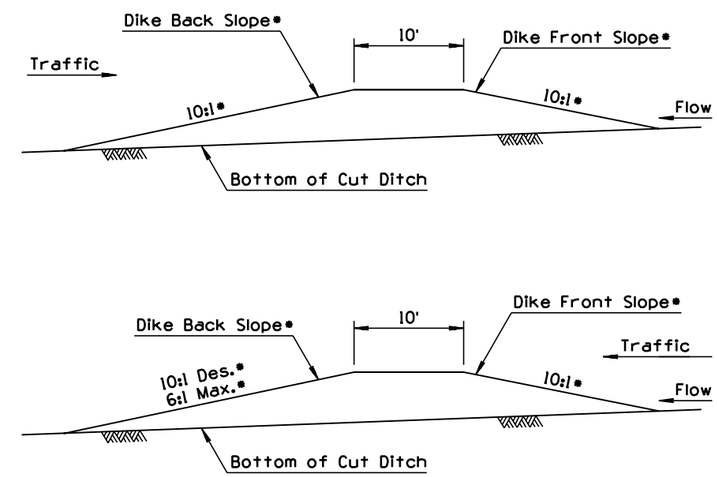

SECTION B-B

* Slope relative to grade of cut ditch at intersection with toe

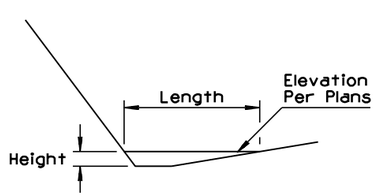

SECTION A-A

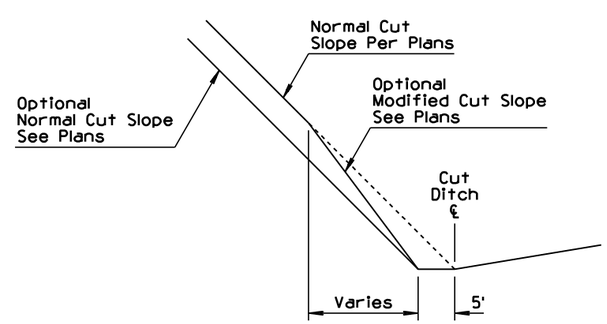

SECTION C-C

DESIGN APPROVED Terry H. Otterness APPROVED FOR DISTRIBUTION Ronald C. Williams	STATE OF ARIZONA DEPARTMENT OF TRANSPORTATION DIVISION OF HIGHWAYS STANDARD DRAWINGS	3/94
	DITCHES, CHANNELS, DIKES AND BERMS DITCH DIKE	DRAWING NO. C-03.10 Sheet 3 of 5

NO	DESCRIPTION OF REVISIONS	MADE BY	DATE
1			
2			
3			
4			

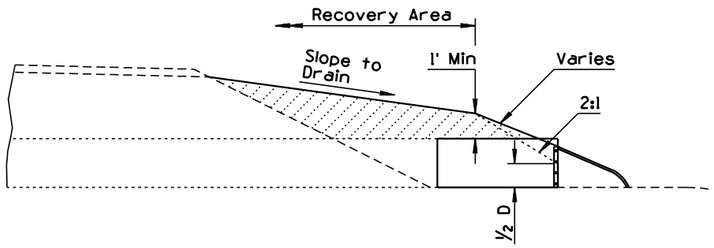

SECTION A-A (WITH END SECTION)

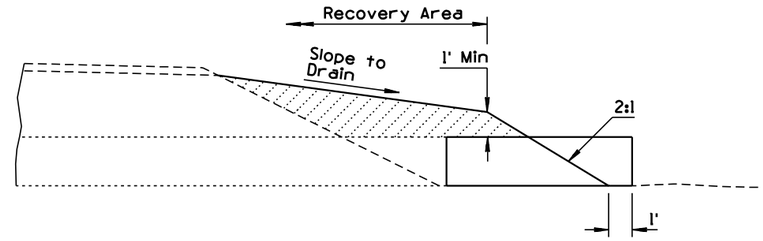

SECTION A-A (WITHOUT END SECTION)

GENERAL NOTES

1. Pipe berms not required when pipe projection is protected by guard rail.
2. Berm construction similar for multiple pipe installation and for pipes without end sections.
3. Berm construction shown is for pipe extensions. Berm construction similar for new pipe installation. See Pipe Berm Requirement Detail. If Point A is within the recovery area, then a pipe berm is required and Point B is set at the edge of the recovery area.

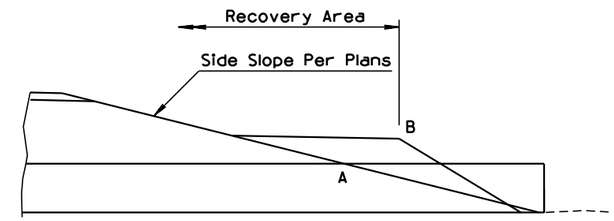

PIPE BERM REQUIREMENT DETAIL

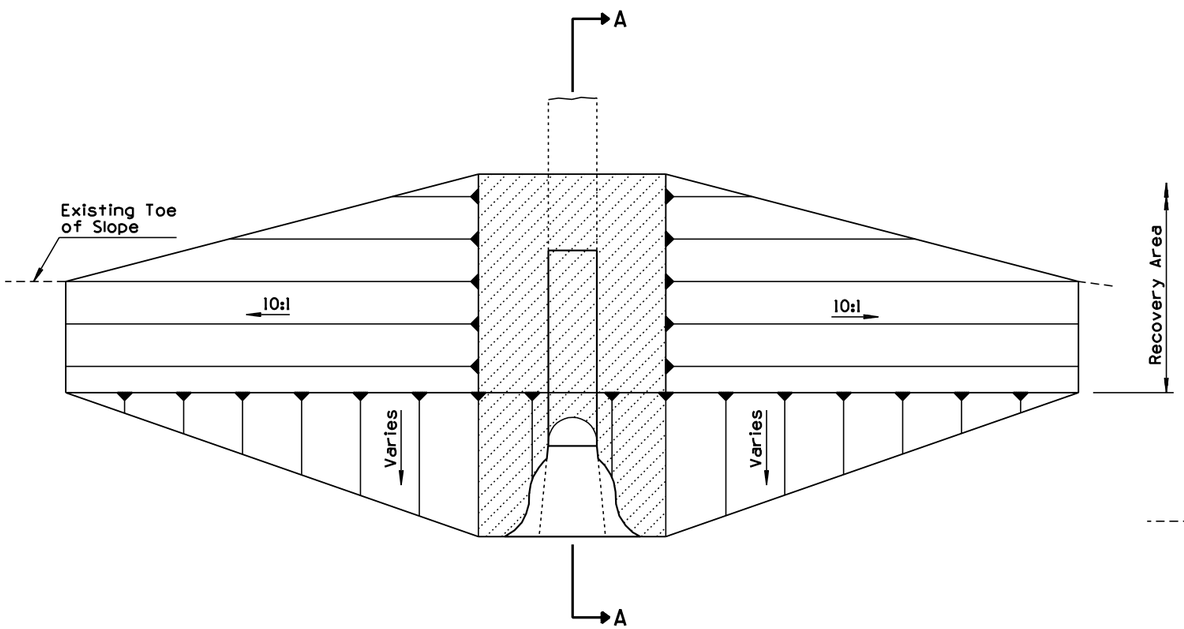

STRAIGHT PIPE PLAN

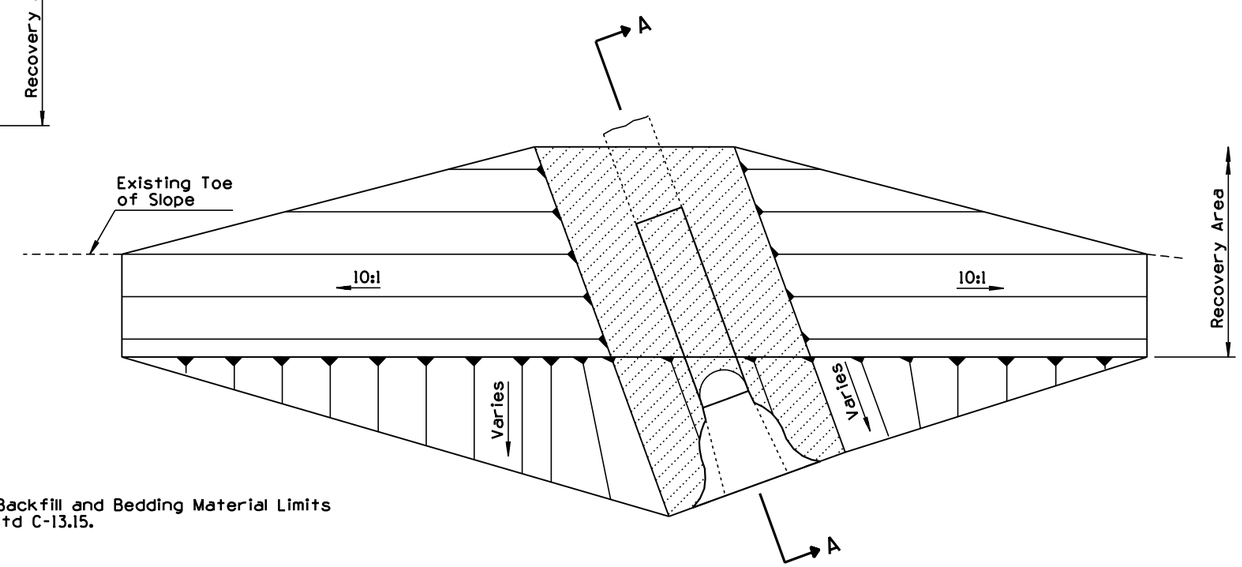

SKEWED PIPE PLAN

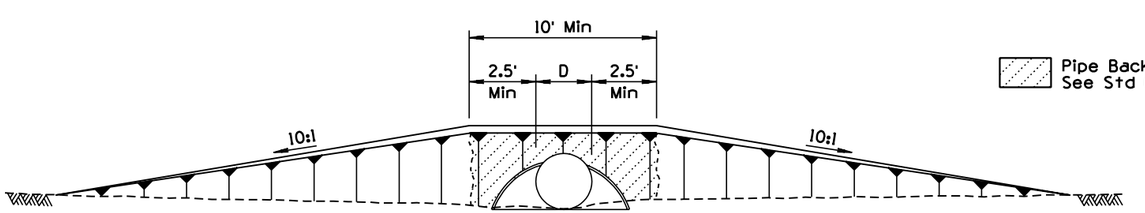

ELEVATION

Pipe Backfill and Bedding Material Limits
See Std C-13.15.

NOTE:
Single Pipe Installation: D = Outside Diameter of Pipe
Multiple Pipe Installation: D = Outside Edge to Outside Edge of Pipes

DESIGN APPROVED Terry H. Ottemas APPROVED FOR DISTRIBUTION Ronald C. Williams	STATE OF ARIZONA DEPARTMENT OF TRANSPORTATION DIVISION OF HIGHWAYS STANDARD DRAWINGS	3/94
	DITCHES, CHANNELS, DIKES AND BERMS PIPE BERMS	DRAWING NO. C-03.10 Sheet 4 of 5

NO	DESCRIPTION OF REVISIONS	MADE BY	DATE
1			
2			
3			
4			

GENERAL NOTES

1. Berm construction similar for box culvert and pipe with headwall.
2. Berm construction shown is for extension of existing facilities. Berm construction similar for new facilities.

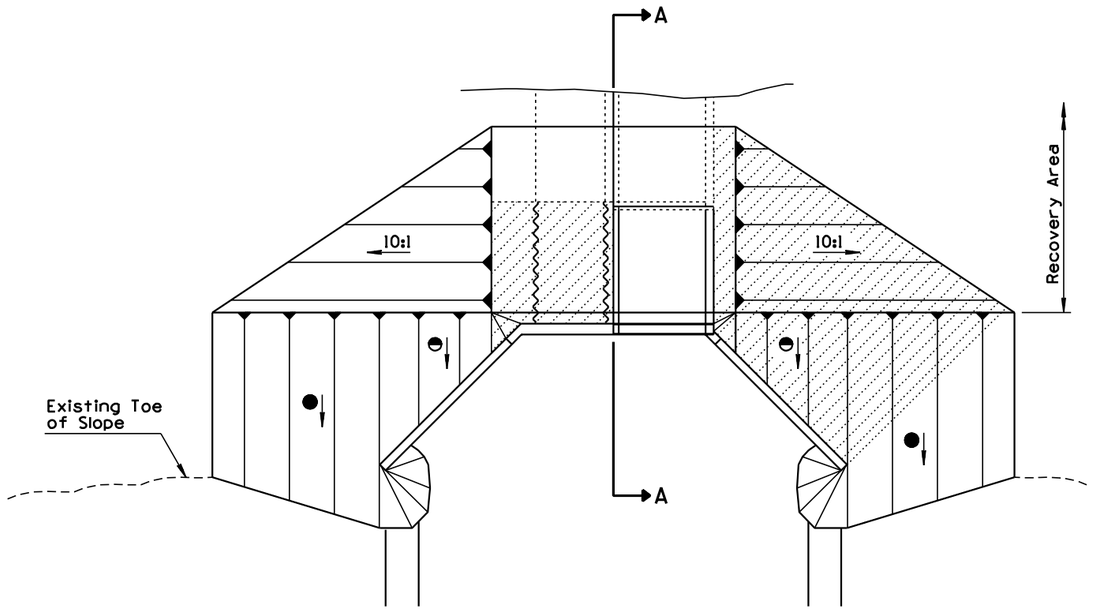

STRAIGHT HEADWALL PLAN

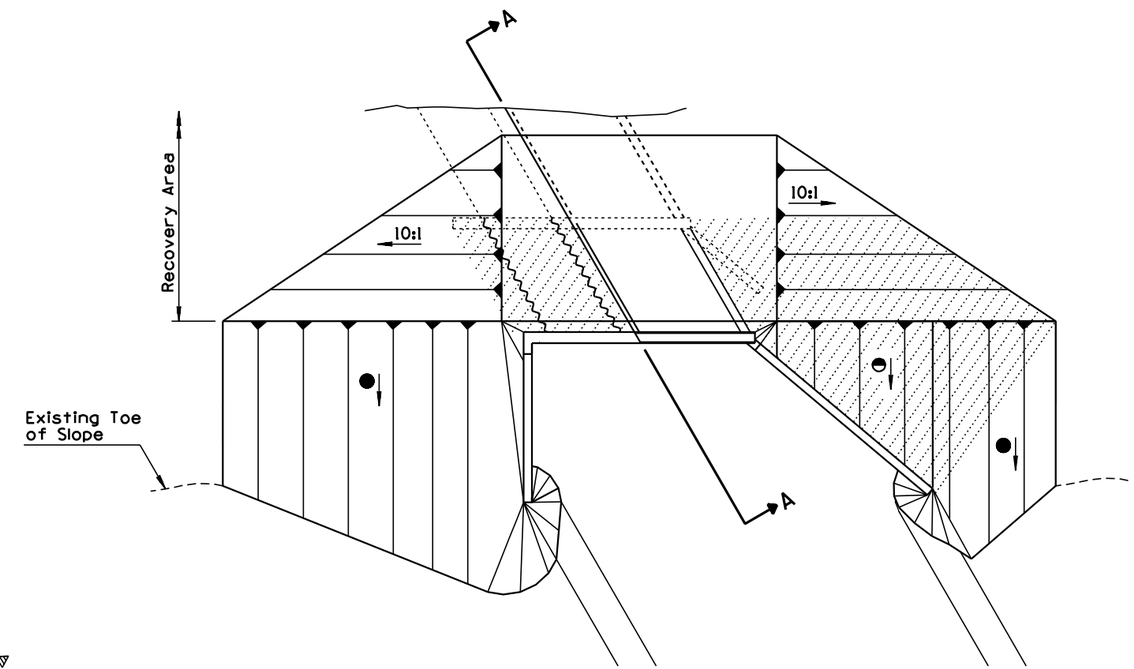

SKEWED HEADWALL PLAN

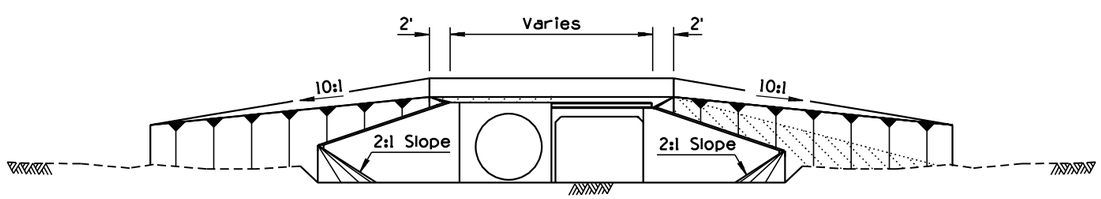

ELEVATION

- ◑ Vary slope. Slope shall match to top of wing wall.
- ● Slope shall match wing wall design slope (2:1, 4:1, or 6:1).
- ▨ Structure Backfill Limits See Std B-19.50

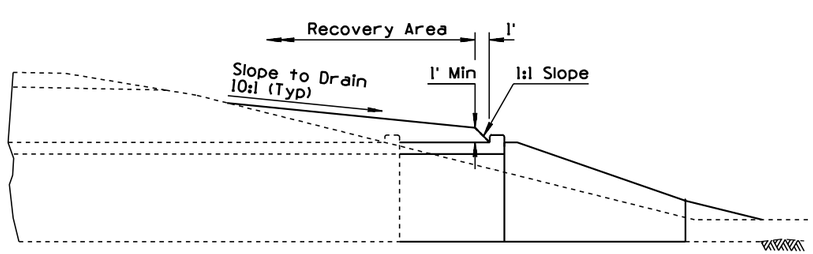

SECTION A-A (FOR CBC)

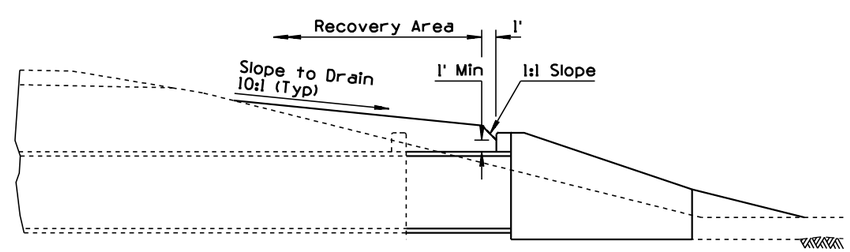

SECTION A-A (FOR PIPE WITH HEADWALL)

DESIGN APPROVED Terry H. Otterness APPROVED FOR DISTRIBUTION Ronald C. Williams	STATE OF ARIZONA DEPARTMENT OF TRANSPORTATION DIVISION OF HIGHWAYS STANDARD DRAWINGS	3/94
	DITCHES, CHANNELS, DIKES AND BERMS HEADWALL BERMS	DRAWING NO. C-03.10 Sheet 5 of 5

NO	DESCRIPTION OF REVISIONS	MADE BY	DATE
1	CORRECTED SPELLING	PNB	10/95
2			
3			
4			

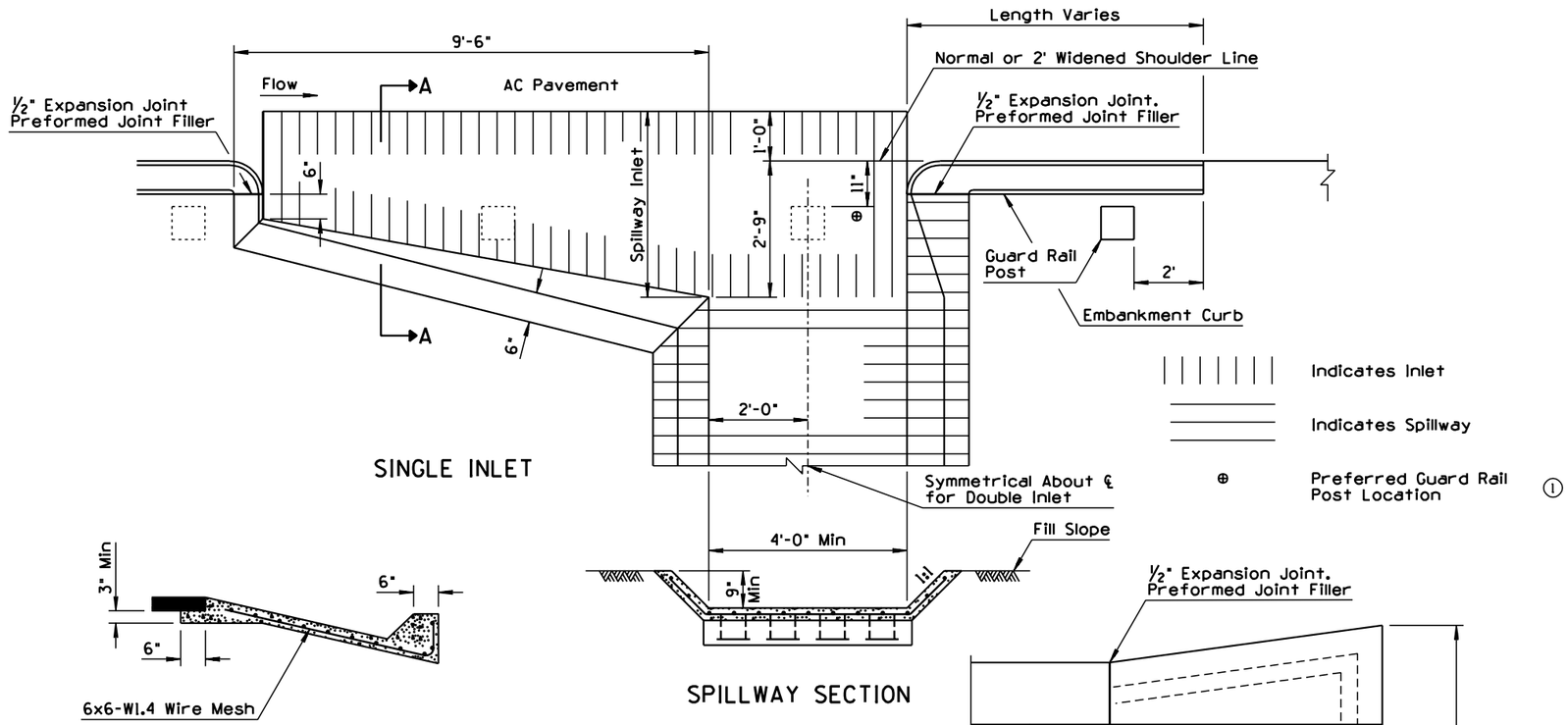

SINGLE INLET

SECTION A-A

SPILLWAY SECTION

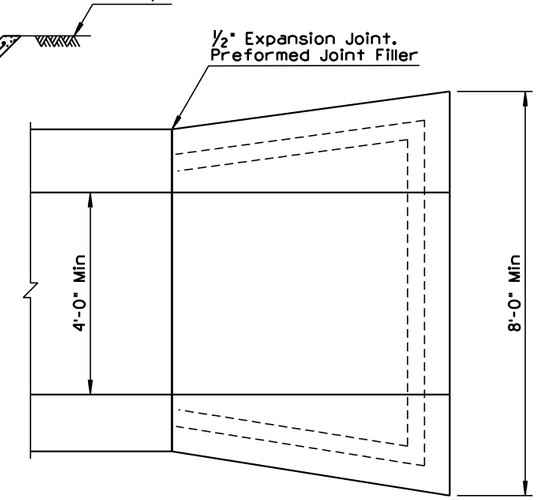

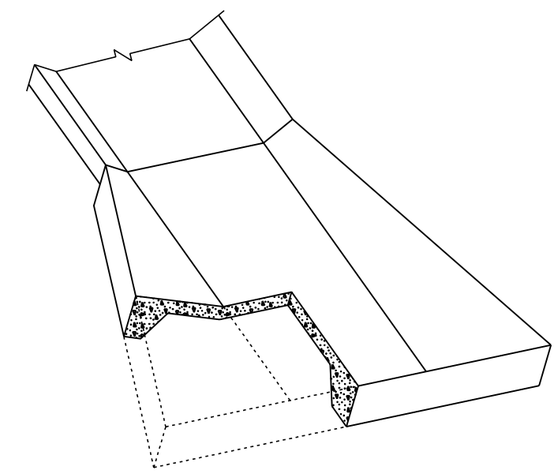

OUTLET DETAIL

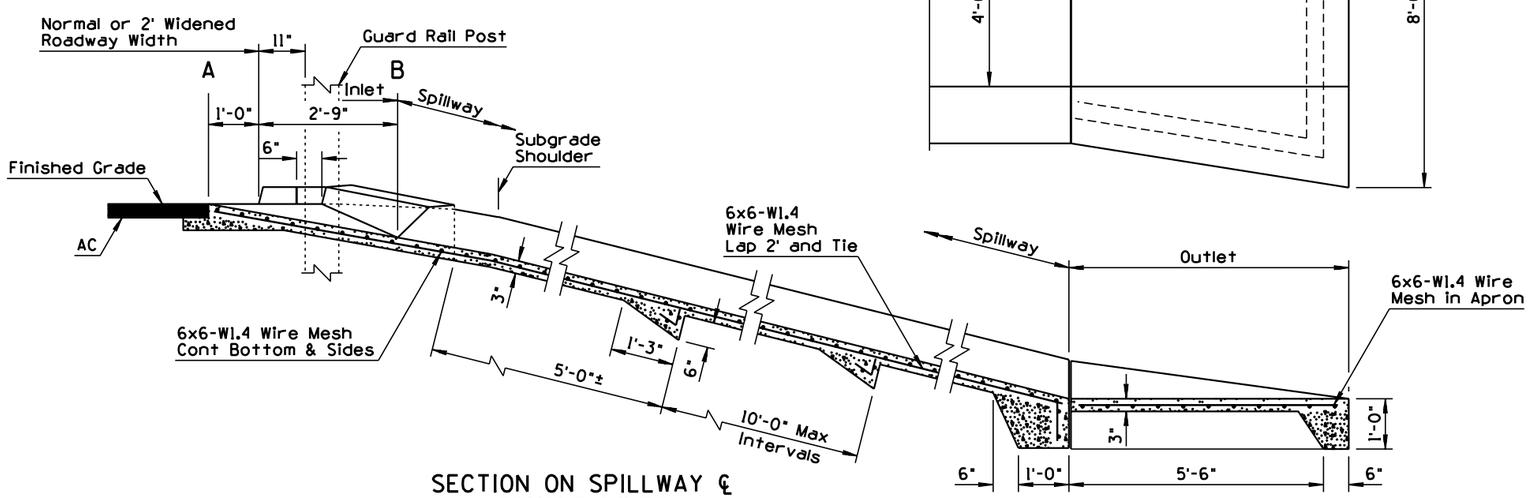

SECTION ON SPILLWAY ℄
DOUBLE INLET

GENERAL NOTES

1. Concrete for the spillway inlet, spillway outlet shall be Class B.
2. Where rock is encountered, the outlet may be omitted.
3. When outlet is used, the wire mesh shall extend through the joint into the outlet in lieu of bending into the key.
4. Spillway invert slope shall be uniformly downward from A to B.

DESIGN APPROVED Terry H. Otterness	STATE OF ARIZONA DEPARTMENT OF TRANSPORTATION DIVISION OF HIGHWAYS STANDARD DRAWINGS	REV. 10/95
APPROVED FOR DISTRIBUTION Ronald C. Williams	SPILLWAY, EMBANKMENT	DRAWING NO. C-04.10

NO	DESCRIPTION OF REVISIONS	MADE BY	DATE
1	CORRECTED SPELLING	PNB	10/95
2			
3			
4			

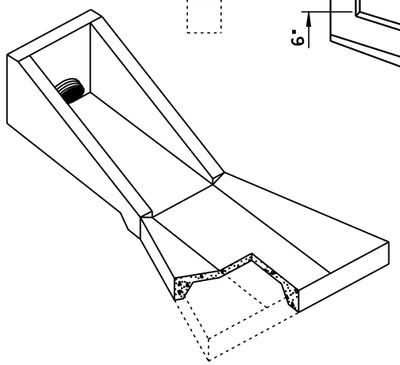

OUTLET DETAIL

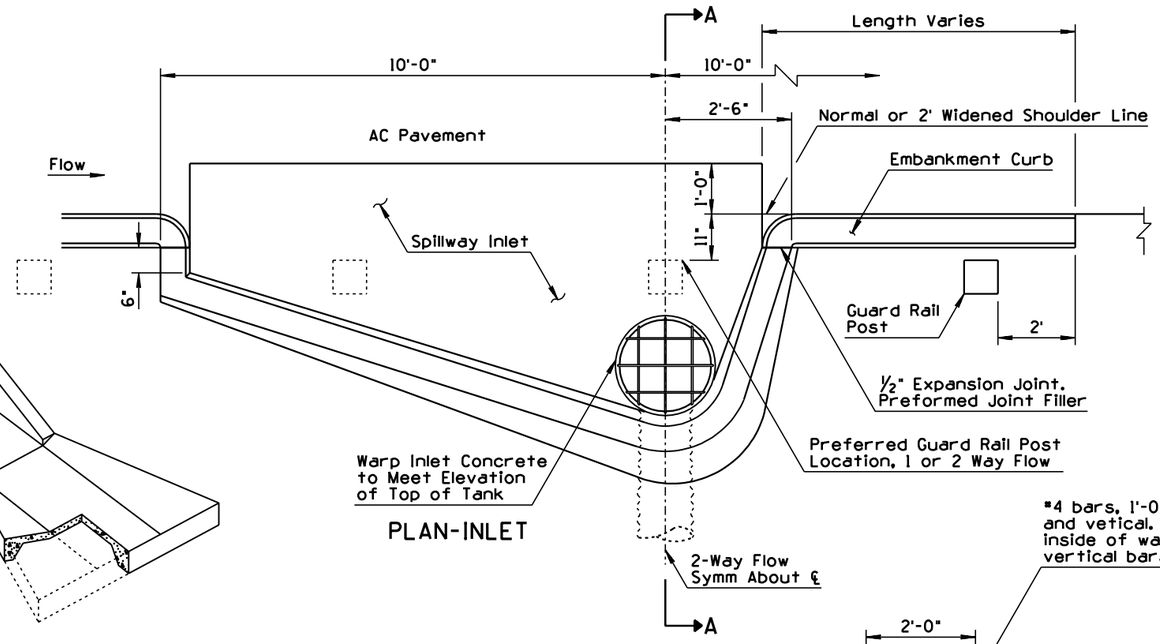

PLAN-INLET

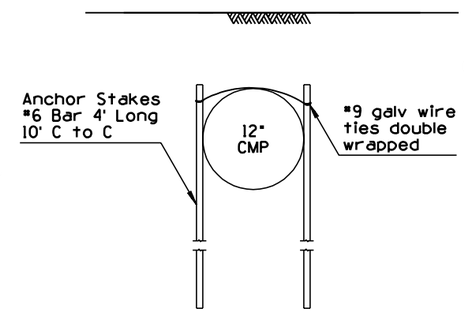

DETAIL ANCHOR

GENERAL NOTES

1. Round all exposed concrete corners.
2. Tank, stub, trash rack and angle supports shall be shop fabricated, welded and galvanized in accordance with AASHTO M 36.
3. Stub shall be of annular corrugation. Downdrain piping beyond stub may be either annular or helical corrugation.
4. Permissable couplings shall be mechanical, heat-shrinkable polyolatin sheet; on piece lap type neoprene sheet or slip seam; all min 12" width and min 18 ga.
5. Inlet invert slope shall be uniformly downward from one foot inside of embankment curb base.
6. Inlet and outlet concrete shall be Class B. Embankment curb concrete shall be in accordance with Standard Specifications.

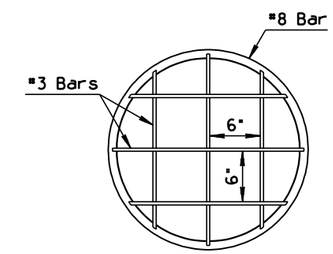

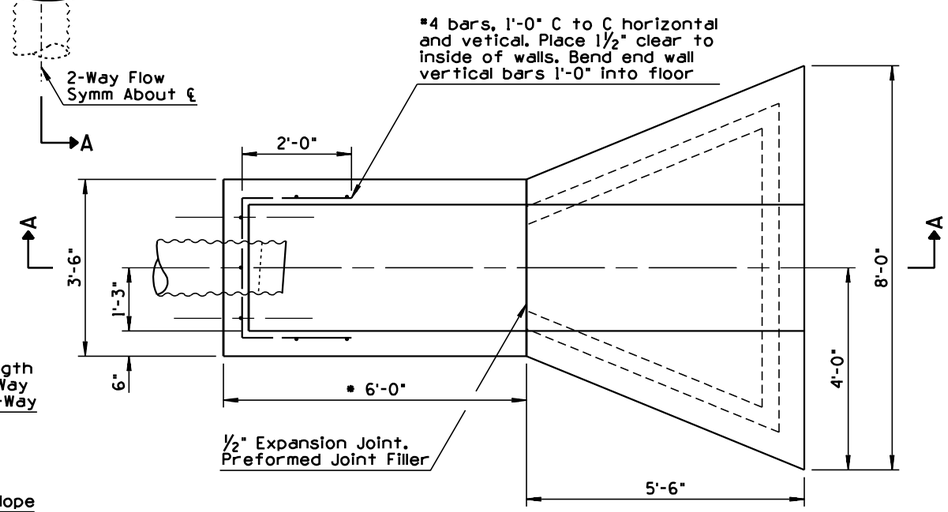

OUTLET-HEADWALL AND CONCRETE APRON

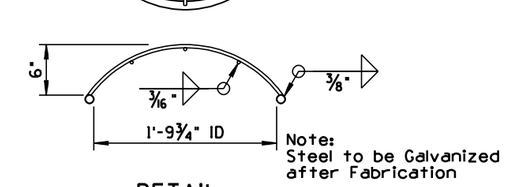

DETAIL TRASH RACK

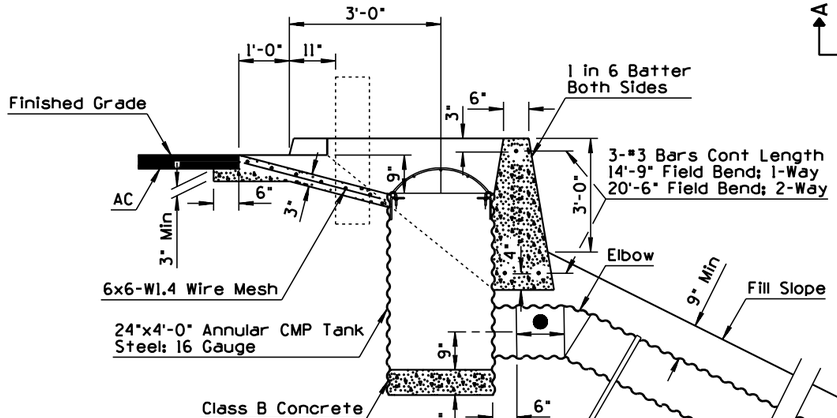

● Varies with subgrade slope and pavement structure thickness

* Varies with fill slope and pipe cover

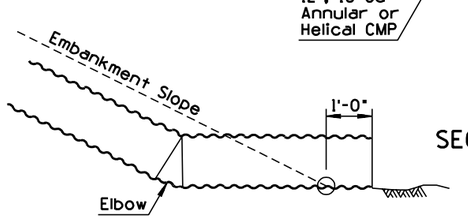

CMP OUTLET ON ROCK

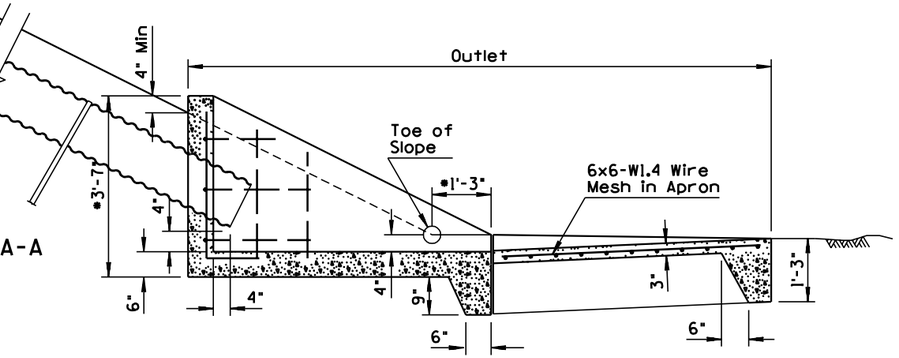

SECTION A-A

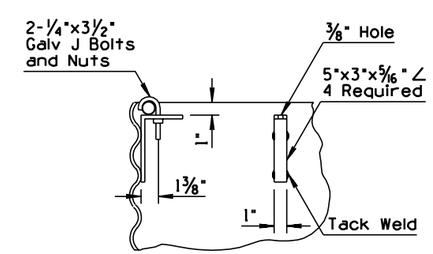

DETAIL ANGLE SUPPORTS FOR TRASH RACK

DESIGN APPROVED Terry H. Ottenns	STATE OF ARIZONA DEPARTMENT OF TRANSPORTATION DIVISION OF HIGHWAYS STANDARD DRAWINGS	REV. 10/95
APPROVED FOR DISTRIBUTION Ronald C. Williams	DOWNDRAIN, EMBANKMENT	DRAWING NO. C-04.20

NO	DESCRIPTION OF REVISIONS	MADE BY	DATE
1	REISSUE STD	PNB	7/94
2			
3			
4			

LENGTH OF SPILLWAY

Thickness ◑	Embankment Height																										
	5'	6'	7'	8'	9'	10'	11'	12'	13'	14'	15'	16'	17'	18'	19'	20'	21'	22'	23'	24'	25'	26'	27'	28'	29'	30'	31'	32'
12"	32'	37'	43'	49'	50'	50'	51'	52'	52'	52'	52'	53'	53'	54'	54'	54'	55'	55'	56'	56'	57'	57'	58'	58'	59'	59'	60'	60'
13"	33'	38'	44'	50'	50'	51'	51'	52'	52'	52'	53'	53'	53'	54'	54'	55'	55'	56'	56'	57'	57'	58'	58'	59'	59'	60'	60'	61'
14"	33'	38'	44'	50'	51'	51'	52'	52'	53'	53'	53'	54'	54'	54'	55'	55'	56'	56'	57'	57'	58'	58'	59'	59'	60'	60'	61'	61'
15"	34'	39'	45'	51'	51'	52'	52'	53'	53'	54'	54'	54'	55'	55'	55'	56'	56'	57'	57'	58'	58'	59'	59'	60'	60'	61'	61'	62'
16"	34'	39'	45'	51'	52'	52'	53'	53'	54'	54'	54'	55'	55'	56'	56'	56'	57'	57'	58'	58'	59'	59'	60'	60'	61'	61'	62'	62'
17"	35'	40'	46'	52'	52'	53'	53'	54'	54'	55'	55'	55'	56'	56'	57'	57'	57'	58'	58'	59'	59'	60'	60'	61'	61'	62'	62'	63'
18"	35'	40'	46'	52'	53'	53'	54'	54'	55'	55'	55'	56'	56'	57'	57'	57'	58'	58'	59'	59'	60'	60'	61'	61'	62'	62'	63'	63'
19"	36'	41'	47'	53'	53'	54'	54'	55'	55'	56'	56'	56'	57'	57'	58'	58'	58'	59'	59'	60'	60'	61'	61'	62'	62'	63'	63'	64'
20"	36'	41'	47'	53'	54'	54'	55'	55'	56'	56'	56'	57'	57'	58'	58'	58'	59'	59'	60'	60'	61'	61'	62'	62'	63'	63'	64'	64'
21"	37'	42'	48'	54'	54'	55'	55'	56'	56'	57'	57'	57'	58'	58'	59'	59'	59'	60'	60'	61'	61'	62'	62'	63'	63'	64'	64'	65'
22"	37'	42'	48'	54'	55'	55'	56'	56'	57'	57'	57'	58'	58'	59'	59'	59'	60'	60'	61'	61'	62'	62'	63'	63'	64'	64'	65'	65'
23"	38'	43'	49'	55'	55'	56'	56'	57'	57'	58'	58'	58'	59'	59'	60'	60'	60'	61'	61'	62'	62'	63'	63'	64'	64'	65'	65'	66'
24"	38'	43'	49'	55'	56'	56'	57'	57'	58'	58'	58'	59'	59'	60'	60'	60'	61'	61'	62'	62'	63'	63'	64'	64'	65'	65'	66'	66'
25"	39'	44'	50'	56'	56'	57'	57'	58'	58'	59'	59'	59'	60'	60'	61'	61'	61'	62'	62'	63'	63'	64'	64'	65'	65'	66'	66'	67'
26"	39'	44'	50'	56'	57'	57'	58'	58'	59'	59'	59'	60'	60'	61'	61'	61'	62'	62'	63'	63'	64'	64'	65'	65'	66'	66'	67'	67'
27"	40'	45'	51'	57'	57'	58'	58'	59'	59'	60'	60'	60'	61'	61'	62'	62'	62'	63'	63'	64'	64'	65'	65'	66'	66'	67'	67'	68'
28"	40'	45'	51'	57'	58'	58'	59'	59'	60'	60'	60'	61'	61'	62'	62'	62'	63'	63'	64'	64'	65'	65'	66'	66'	67'	67'	68'	68'
29"	41'	46'	52'	58'	58'	59'	59'	60'	60'	61'	61'	61'	62'	62'	63'	63'	63'	64'	64'	65'	65'	66'	66'	67'	67'	68'	68'	69'
30"	41'	46'	52'	58'	59'	59'	60'	60'	61'	61'	61'	62'	62'	63'	63'	63'	64'	64'	65'	65'	66'	66'	67'	67'	68'	68'	69'	69'
31"	42'	47'	53'	59'	59'	60'	60'	61'	61'	62'	62'	62'	63'	63'	64'	64'	64'	65'	65'	66'	66'	67'	67'	68'	68'	69'	69'	70'
32"	42'	47'	53'	59'	60'	60'	61'	61'	62'	62'	62'	63'	63'	64'	64'	64'	65'	65'	66'	66'	67'	67'	68'	68'	69'	69'	70'	70'
33"	43'	48'	54'	60'	60'	61'	61'	62'	62'	63'	63'	63'	64'	64'	65'	65'	65'	66'	66'	67'	67'	68'	68'	69'	69'	70'	70'	71'
34"	43'	48'	54'	60'	61'	61'	62'	62'	63'	63'	63'	64'	64'	65'	65'	65'	66'	66'	67'	67'	68'	68'	69'	69'	70'	70'	71'	71'
35"	44'	49'	55'	61'	61'	62'	62'	63'	63'	64'	64'	64'	65'	65'	66'	66'	66'	67'	67'	68'	68'	69'	69'	70'	70'	71'	71'	72'
36"	44'	49'	55'	61'	62'	62'	63'	63'	64'	64'	64'	65'	65'	66'	66'	66'	67'	67'	68'	68'	69'	69'	70'	70'	71'	71'	72'	72'

C-02.10 AND C-02.20 SLOPES

LENGTH OF SPILLWAY

Thickness ◑	Embankment Height								
	5'	6'	7'	8'	9'	10'	11'	12'	13'
12"	22'	22'	22'	23'	23'	24'	24'	24'	25'
13"	22'	22'	23'	23'	23'	24'	24'	25'	25'
14"	22'	23'	23'	23'	24'	24'	25'	25'	26'
15"	23'	23'	23'	24'	24'	25'	25'	25'	26'
16"	23'	23'	24'	24'	24'	25'	25'	26'	26'
17"	23'	24'	24'	24'	25'	25'	26'	26'	27'
18"	24'	24'	25'	25'	25'	26'	26'	27'	27'
19"	24'	24'	25'	25'	25'	26'	26'	27'	27'
20"	25'	25'	25'	25'	26'	26'	27'	27'	28'
21"	25'	25'	25'	26'	26'	27'	27'	28'	28'
22"	25'	25'	26'	26'	27'	27'	27'	28'	28'
23"	26'	26'	26'	26'	27'	27'	28'	28'	29'
24"	26'	26'	26'	27'	27'	28'	28'	29'	29'
25"	26'	27'	27'	27'	28'	28'	28'	29'	29'
26"	27'	27'	27'	28'	28'	28'	29'	29'	30'
27"	27'	27'	28'	28'	28'	29'	29'	30'	30'
28"	27'	28'	28'	28'	29'	29'	29'	30'	30'
29"	28'	28'	28'	29'	29'	29'	30'	30'	31'
30"	28'	28'	29'	29'	29'	30'	30'	31'	31'
31"	28'	29'	29'	29'	30'	30'	31'	31'	32'
32"	29'	29'	29'	30'	30'	30'	31'	31'	32'
33"	29'	29'	30'	30'	30'	31'	31'	32'	32'
34"	29'	30'	30'	30'	31'	31'	32'	32'	33'
35"	30'	30'	30'	31'	31'	31'	32'	32'	33'
36"	30'	30'	31'	31'	31'	32'	32'	33'	33'

C-02.30 SLOPES

GENERAL NOTES

1. For C-02.10 slopes with embankment height over 24', use length for 24' embankment height from table + 2.24.
2. For C-02.20 slopes with embankment height over 32', use length for 32' embankment height from table + 1.8.
3. For C-02.30 slopes with embankment height over 13', use length for 13' embankment height from table + 1.8.
4. For spillway details, see Std C-04.10.

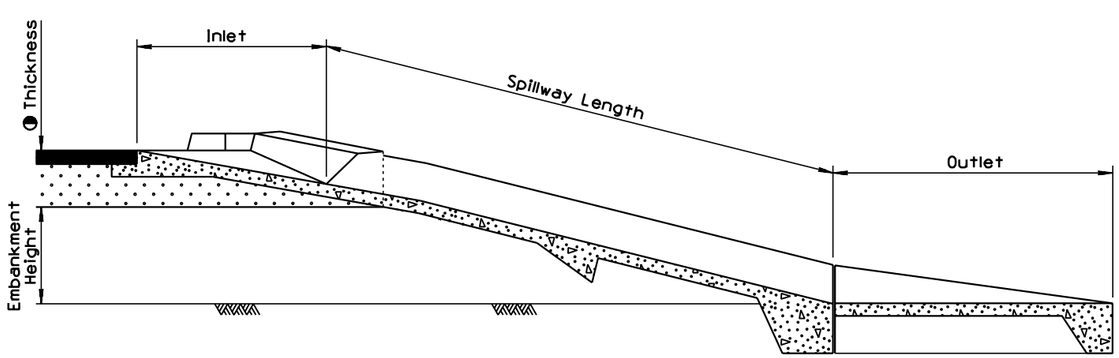

DESIGN APPROVED Terry H. Otterness	STATE OF ARIZONA DEPARTMENT OF TRANSPORTATION DIVISION OF HIGHWAYS STANDARD DRAWINGS	REV. 7/94
APPROVED FOR DISTRIBUTION Ronald C. Williams	① SPILLWAY LENGTH TABLE	DRAWING NO. C-04.30

NO	DESCRIPTION OF REVISIONS	MADE BY	DATE
1	REISSUE STD	PNB	7/94
2			
3			
4			

LENGTH OF DOWNDRAIN

Thickness ◑	Embankment Height																									
	7'	8'	9'	10'	11'	12'	13'	14'	15'	16'	17'	18'	19'	20'	21'	22'	23'	24'	25'	26'	27'	28'	29'	30'	31'	32'
12"	32'	38'	46'	46'	46'	46'	48'	48'	48'	50'	50'	50'	50'	52'	52'	52'	52'	54'	54'	54'	54'	56'	56'	56'	56'	58'
13"	32'	40'	46'	46'	48'	48'	48'	48'	50'	50'	50'	50'	52'	52'	52'	52'	54'	54'	54'	54'	56'	56'	56'	56'	58'	58'
14"	34'	40'	46'	46'	48'	48'	50'	50'	50'	50'	50'	52'	52'	52'	52'	54'	54'	54'	54'	56'	56'	56'	56'	58'	58'	58'
15"	34'	40'	46'	46'	48'	48'	50'	50'	50'	50'	52'	52'	52'	52'	54'	54'	54'	54'	56'	56'	56'	56'	58'	58'	58'	60'
16"	34'	40'	48'	48'	48'	48'	50'	50'	50'	52'	52'	52'	52'	54'	54'	54'	54'	56'	56'	56'	56'	58'	58'	58'	60'	60'
17"	34'	42'	48'	48'	50'	50'	50'	50'	52'	52'	52'	52'	54'	54'	54'	54'	56'	56'	56'	56'	58'	58'	58'	60'	60'	60'
18"	36'	42'	48'	48'	50'	50'	52'	52'	52'	52'	52'	54'	54'	54'	54'	56'	56'	56'	56'	58'	58'	58'	58'	60'	60'	60'
19"	36'	42'	48'	48'	50'	50'	52'	52'	52'	52'	54'	54'	54'	54'	56'	56'	56'	56'	58'	58'	58'	58'	60'	60'	60'	62'
20"	36'	42'	50'	50'	50'	50'	52'	52'	52'	54'	54'	54'	54'	56'	56'	56'	56'	58'	58'	58'	58'	60'	60'	60'	62'	62'
21"	36'	44'	50'	50'	52'	52'	52'	52'	54'	54'	54'	54'	56'	56'	56'	56'	58'	58'	58'	58'	60'	60'	60'	62'	62'	62'
22"	38'	44'	50'	50'	52'	52'	54'	54'	54'	54'	54'	56'	56'	56'	56'	58'	58'	58'	58'	60'	60'	60'	62'	62'	62'	62'
23"	38'	44'	50'	50'	52'	52'	54'	54'	54'	54'	56'	56'	56'	56'	58'	58'	58'	58'	60'	60'	60'	60'	62'	62'	62'	64'
24"	38'	44'	52'	52'	52'	52'	54'	54'	54'	56'	56'	56'	56'	58'	58'	58'	58'	60'	60'	60'	60'	62'	62'	62'	64'	64'
25"	38'	46'	52'	52'	54'	54'	54'	54'	56'	56'	56'	56'	58'	58'	58'	58'	60'	60'	60'	60'	62'	62'	62'	64'	64'	64'
26"	40'	46'	52'	52'	54'	54'	56'	56'	56'	56'	56'	58'	58'	58'	58'	60'	60'	60'	60'	62'	62'	62'	64'	64'	64'	64'
27"	40'	46'	52'	52'	54'	54'	56'	56'	56'	56'	58'	58'	58'	58'	60'	60'	60'	62'	62'	62'	62'	64'	64'	64'	64'	66'
28"	40'	46'	54'	54'	54'	54'	56'	56'	58'	58'	58'	58'	60'	60'	60'	60'	60'	62'	62'	62'	64'	64'	64'	64'	66'	66'
29"	40'	48'	54'	54'	56'	56'	56'	56'	58'	58'	58'	58'	60'	60'	60'	60'	62'	62'	62'	62'	64'	64'	64'	66'	66'	66'
30"	42'	48'	54'	54'	56'	56'	58'	58'	58'	58'	58'	60'	60'	60'	60'	62'	62'	62'	62'	64'	64'	64'	66'	66'	66'	66'
31"	42'	48'	54'	54'	56'	56'	58'	58'	58'	60'	60'	60'	60'	60'	62'	62'	62'	64'	64'	64'	64'	66'	66'	66'	66'	68'
32"	42'	48'	56'	56'	56'	56'	58'	58'	60'	60'	60'	60'	62'	62'	62'	62'	62'	64'	64'	64'	66'	66'	66'	66'	68'	68'
33"	42'	50'	56'	56'	58'	58'	58'	60'	60'	60'	60'	62'	62'	62'	62'	64'	64'	64'	64'	66'	66'	66'	66'	68'	68'	68'
34"	44'	50'	56'	56'	58'	58'	60'	60'	60'	60'	62'	62'	62'	62'	64'	64'	64'	64'	66'	66'	66'	66'	68'	68'	68'	70'
35"	44'	50'	58'	58'	58'	58'	60'	60'	60'	62'	62'	62'	62'	64'	64'	64'	64'	66'	66'	66'	66'	68'	68'	68'	70'	70'
36"	44'	50'	58'	58'	60'	60'	60'	60'	62'	62'	62'	62'	64'	64'	64'	64'	66'	66'	66'	66'	68'	68'	68'	68'	70'	70'

C-02.10 AND C-02.20 SLOPES

LENGTH OF DOWNDRAIN

Thickness ◑	Embankment Height								
	5'	6'	7'	8'	9'	10'	11'	12'	13'
12"	14'	16'	16'	16'	20'	20'	20'	20'	20'
13"	14'	16'	16'	18'	20'	20'	20'	20'	22'
14"	14'	16'	18'	18'	20'	20'	20'	20'	22'
15"	14'	18'	18'	18'	20'	20'	20'	22'	22'
16"	16'	18'	18'	18'	20'	20'	22'	22'	22'
17"	16'	18'	18'	18'	20'	22'	22'	22'	22'
18"	16'	18'	18'	18'	22'	22'	22'	22'	22'
19"	16'	18'	18'	20'	22'	22'	22'	22'	24'
20"	16'	18'	20'	20'	22'	22'	22'	24'	24'
21"	16'	20'	20'	20'	22'	22'	24'	24'	24'
22"	18'	20'	20'	20'	22'	22'	24'	24'	24'
23"	18'	20'	20'	20'	22'	24'	24'	24'	24'
24"	18'	20'	20'	20'	24'	24'	24'	24'	26'
25"	18'	20'	20'	22'	24'	24'	24'	24'	26'
26"	18'	20'	22'	22'	24'	24'	24'	26'	26'
27"	18'	22'	22'	22'	24'	24'	26'	26'	26'
28"	20'	22'	22'	22'	24'	26'	26'	26'	26'
29"	20'	22'	22'	22'	26'	26'	26'	26'	26'
30"	20'	22'	22'	24'	26'	26'	26'	26'	28'
31"	20'	22'	24'	24'	26'	26'	26'	28'	28'
32"	20'	24'	24'	24'	26'	26'	26'	28'	28'
33"	22'	24'	24'	24'	26'	26'	28'	28'	28'
34"	22'	24'	24'	24'	26'	28'	28'	28'	28'
35"	22'	24'	24'	24'	28'	28'	28'	28'	28'
36"	22'	24'	24'	26'	28'	28'	28'	28'	30'

C-02.30 SLOPES

GENERAL NOTES

1. For C-02.10 slopes with embankment height over 24', use length for 24' embankment height from table + 2.24.
2. For C-02.20 slopes with embankment height over 32', use length for 32' embankment height from table + 1.8.
3. For C-02.30 slopes with embankment height over 13', use length for 13' embankment height from table +1.8.
4. For downdrain details, see Std C-04.20.

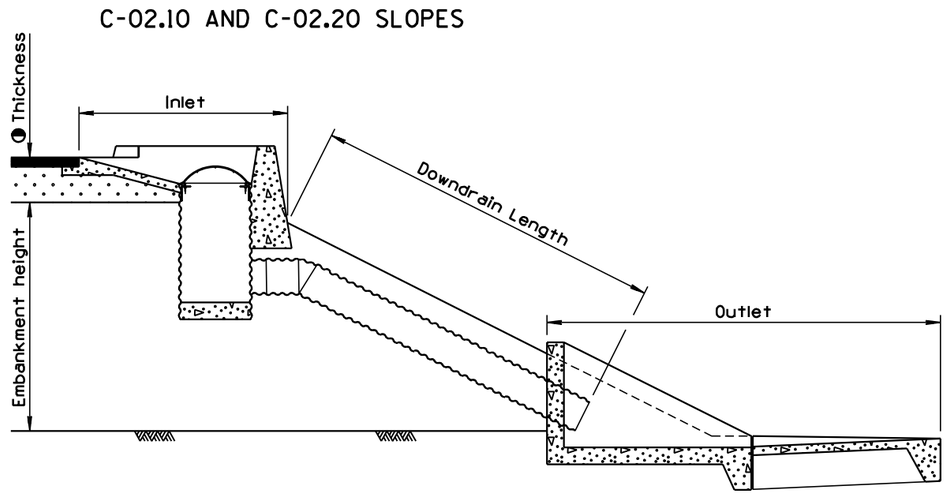

DESIGN APPROVED Terry H. Otterness	STATE OF ARIZONA DEPARTMENT OF TRANSPORTATION DIVISION OF HIGHWAYS STANDARD DRAWINGS	REV. 7/94
APPROVED FOR DISTRIBUTION Ronald C. Williams	① DOWNDRAIN LENGTH TABLE	DRAWING NO. C-04.40

NO	DESCRIPTION OF REVISIONS	MADE BY	DATE
1	REISSUE STD	PNB	7/94
2			
3			
4			

GENERAL NOTES

1. Stub shall have annular corrugation. Downdrain piping beyond stub may be either annular or helical.
2. Couplings shall be mechanical heat-shrinkable polyolatin sheet; one piece lap type neoprene sheet or slip seam; all 12": min width and 18 ga min.
3. Maximum Q Allowable = 8 cfs
   Minimum V Allowable = 1 fps

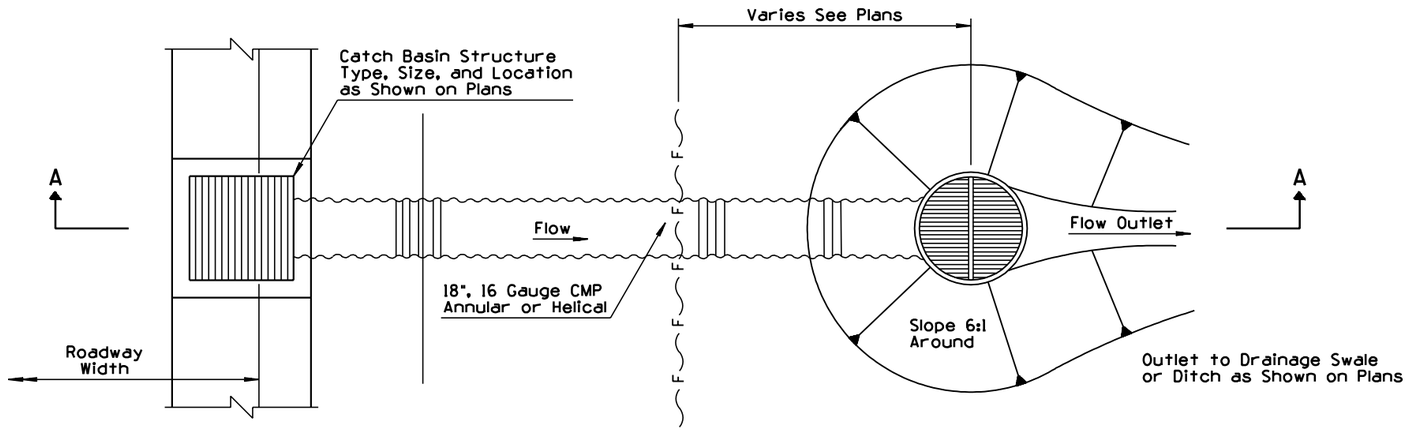

PLAN

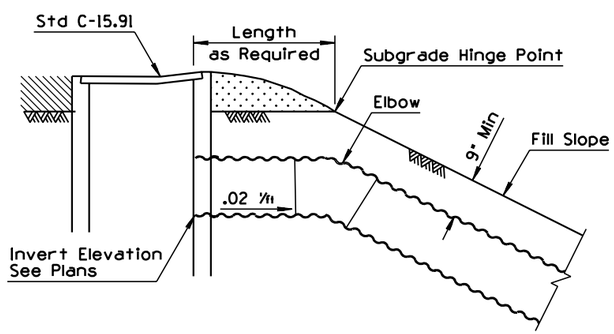

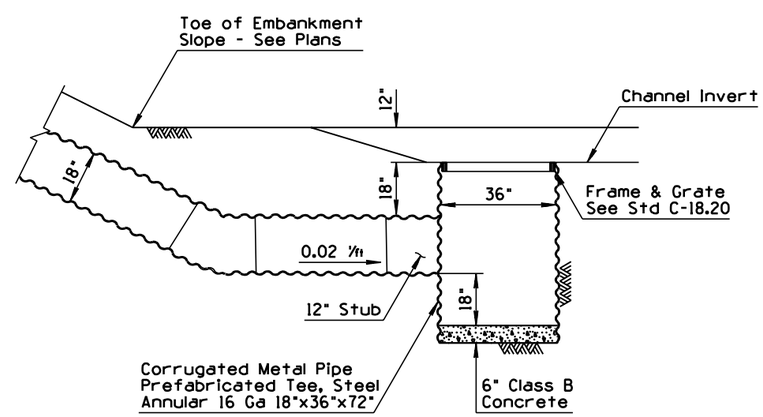

SECTION A-A

DESIGN APPROVED Terry H. Otterness	STATE OF ARIZONA DEPARTMENT OF TRANSPORTATION DIVISION OF HIGHWAYS STANDARD DRAWINGS	REV. 7/94
APPROVED FOR DISTRIBUTION Ronald C. Williams	1 DOWNDRAIN ENERGY DISSIPATOR	DRAWING NO. C-04.50

NO	DESCRIPTION OF REVISIONS	MADE BY	DATE
1	REVISED TYPE C GUTTER DEPRESSION TO 5/8"	JNP	8/99
2			
3			
4			

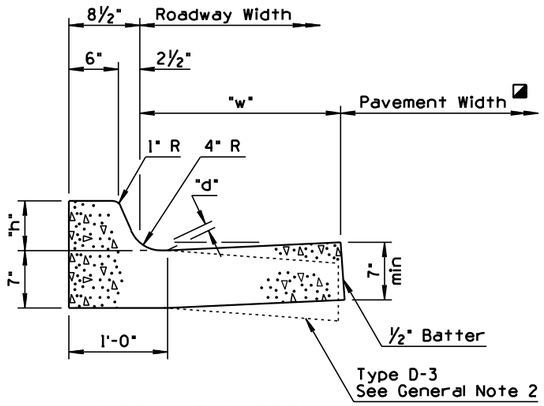

CURB AND GUTTER
TYPE D, D-1, D-2 & D-3

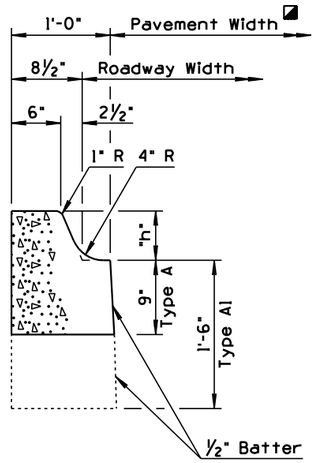

SINGLE CURB
TYPE A & A1

C & G TYPE	CURB HEIGHT "h"	GUTTER WIDTH "w"	GUTTER DEPRESSION "d"
A	◑	N/A	N/A
A-1	◑	N/A	N/A
D	◑	2'-0"	1⅝"
D-1	◑	2'-6"	1¾"
D-2	◑	4'-6"	1¾"
D-3	◑	2'-0"	N/A
G	◑	2'-0"	N/A

◪ See Plans

◑ See Plans (6 or 7 inch Typical)

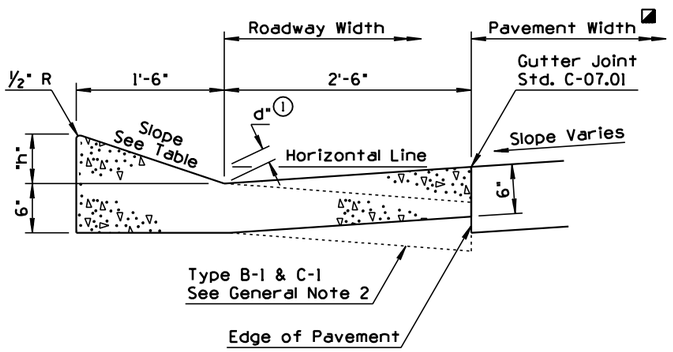

CURB AND GUTTER
TYPE B, C, B-1 & C-1

FREEWAY CURB & GUTTER			
C & G TYPE	CURB HEIGHT "h"	SLOPE	GUTTER DEPRESSION "d"
B	6"	3:1	2 "
B-1	6"	3:1	N/A
C	3"	6:1	5/8" ①
C-1	3"	6:1	N/A

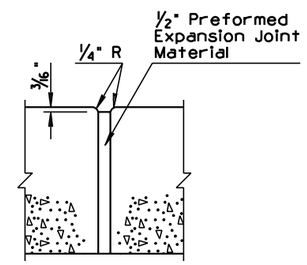

EXPANSION JOINT DETAIL

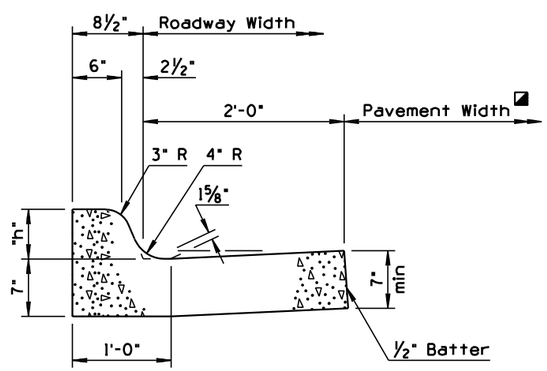

CURB AND GUTTER
TYPE G

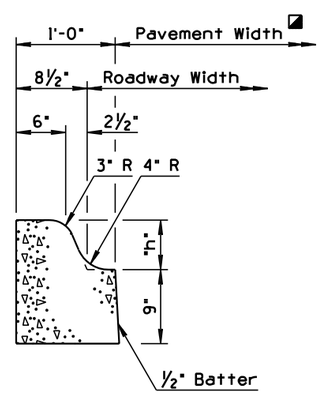

SINGLE CURB
TYPE G

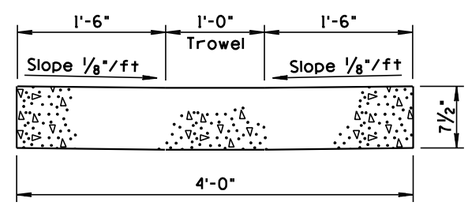

VALEY GUTTER

GENERAL NOTES

SINGLE CURB AND CURB AND GUTTER

1. Single curb, and curb and gutter may be constructed by the use of forms or the concrete may be extruded.
2. When the pavement section slopes away from the gutter, the slope of the gutter shall match the pavement cross slope. Therefore, the gutter depression is not applicable.
3. Two inch deep contraction joints shall be placed in the curb and the gutter at locations which match the joints in adjacent portland cement concrete pavement and at approximate 15 foot centers when adjacent to asphaltic concrete pavement. Joints shall be either hand tooled or sawed.
4. Expansion joints shall be located at tangent points in curb returns, at structures and at maximum 60 foot intervals. The one-half inch joint filler shall extend the full depth at the concrete.
5. Concrete shall be finished with a steel trowel followed by brushing with a fine brush along the length of the curb and gutter.
6. All exposed edges and hand tooled joints shall be finished with a tool having a one-fourth inch radius unless a larger radius is indicated.

EMBANKMENT CURB

1. No additional finishing will be required after extrusion or removal of the forms when the curb presents a neat appearance and the surface is uniform in texture and color.
2. The curb shall conform to the cross section as shown except that the horizontal dimensions shall not vary more than one-half inch.

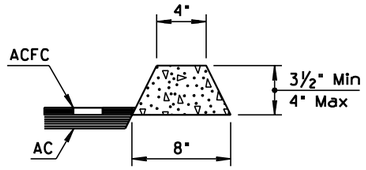

EMBANKMENT CURB

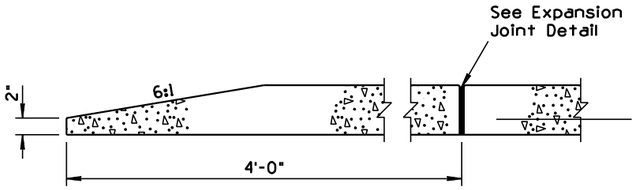

CURB TERMINAL SECTION

DESIGN APPROVED Jerry H. Ottemess APPROVED FOR DISTRIBUTION Ronald C. Williams	STATE OF ARIZONA DEPARTMENT OF TRANSPORTATION DIVISION OF HIGHWAYS STANDARD DRAWINGS	REV. 8/99
	SINGLE CURB, CURB & GUTTER, EMBANKMENT CURB	DRAWING NO. C-05.10

NO	DESCRIPTION OF REVISIONS	MADE BY	DATE
1	MODIFIED VIEW	PNB	7/94
2	ADDED NOTE	PNB	7/94
3	REVISED NOTE	PNB	7/94
4			

GENERAL NOTES

(3) 1. All gutter flow lines shall be constructed to an accurate grade.

2. See Slotted Drain Stds., C-13.60 and C-15.91, for curb and gutter with slotted drain.

3. See Std. C-05.10 for additional general notes and dimensions.

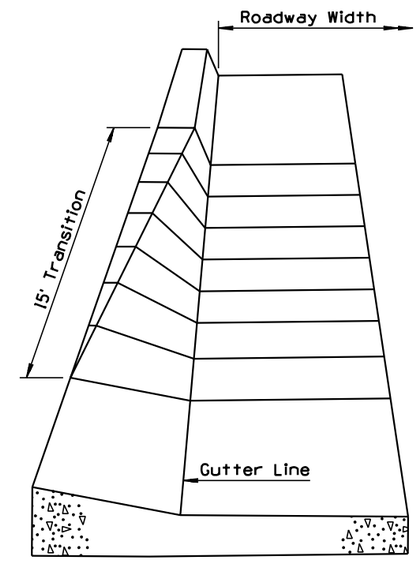

(1) PERSPECTIVE VIEW

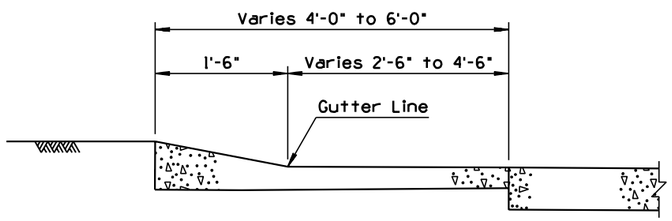

SECTION A-A

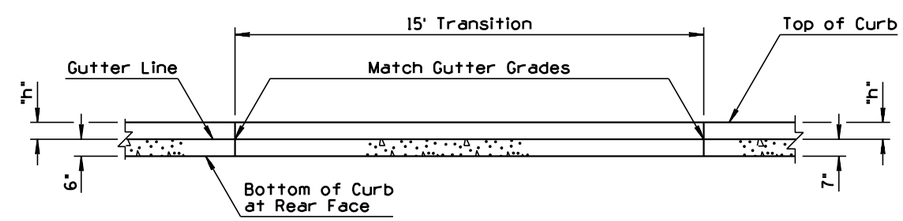

SECTION B-B

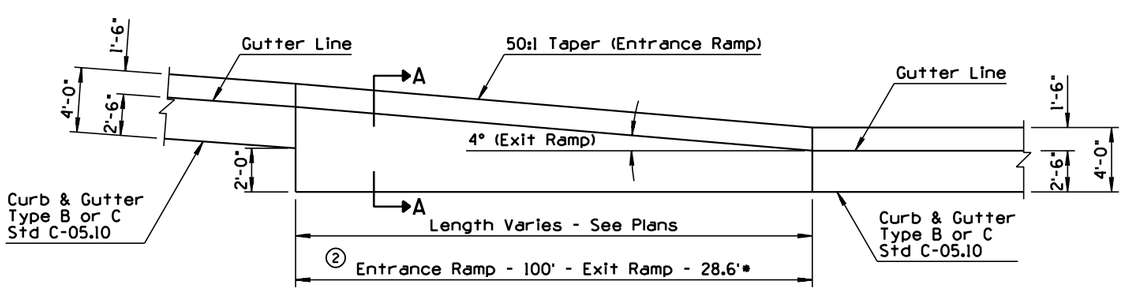

TYPE 1 - CURB & GUTTER TRANSITION - AT RAMP TAPERS

* Dimension may vary where exit occurs on curves, see plans

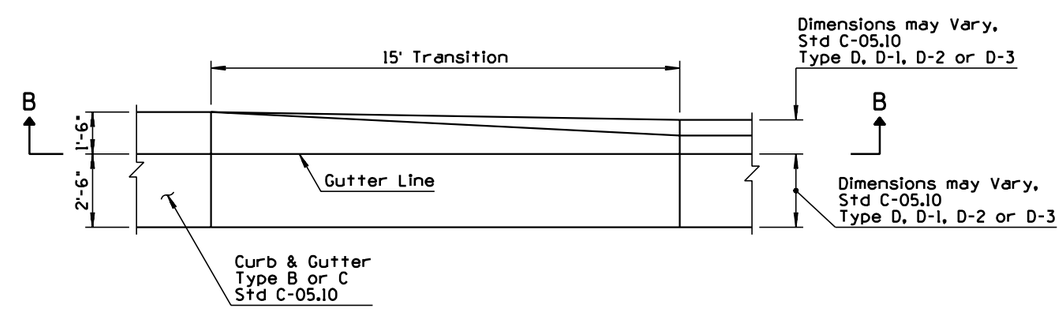

TYPE 2 - CURB & GUTTER TRANSITION

DESIGN APPROVED Terry H. Ottemus	STATE OF ARIZONA DEPARTMENT OF TRANSPORTATION DIVISION OF HIGHWAYS STANDARD DRAWINGS	REV. 7/94
APPROVED FOR DISTRIBUTION Ronald C. Williams	CURB & GUTTER TRANSITIONS	DRAWING NO. C-05.12 Sheet 1 of 3

NO	DESCRIPTION OF REVISIONS	MADE BY	DATE
1	ADDED PERSPECTIVE VIEW	PNB	7/94
2	ADDED TYPE 4 TRANSITION	PNB	7/94
3			
4			

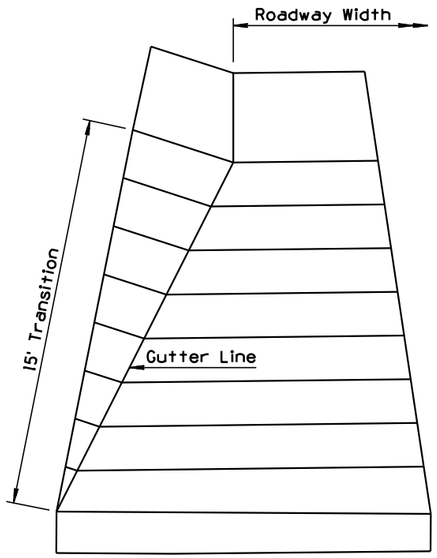

① PERSPECTIVE VIEW

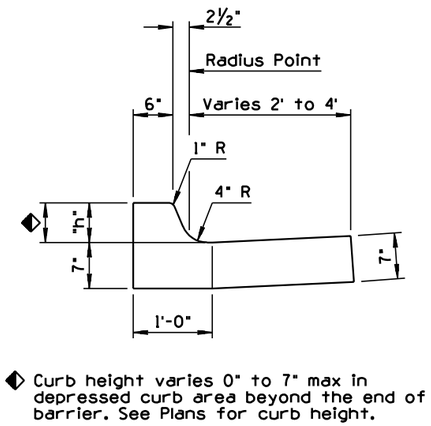

SECTION A-A

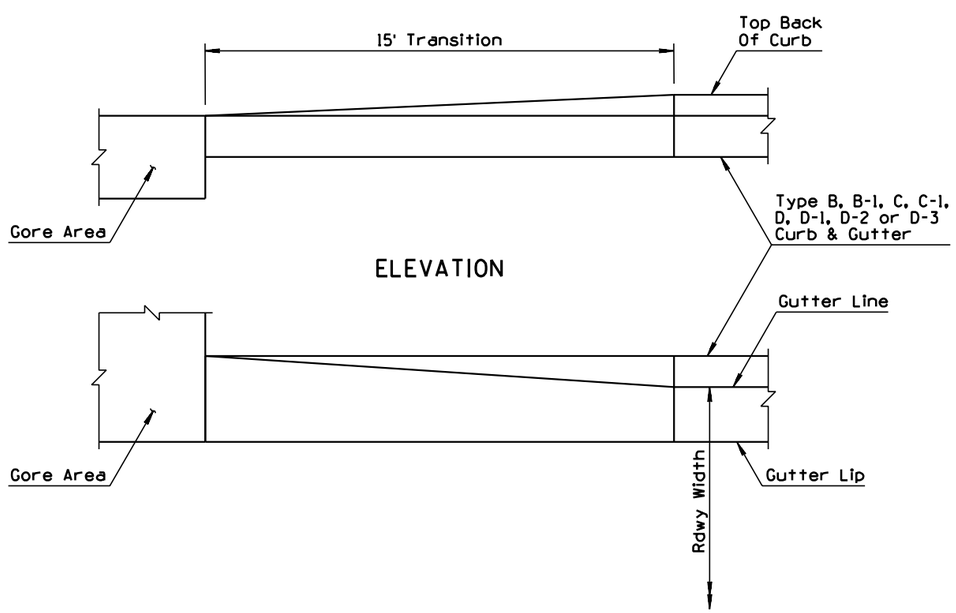

PLAN VIEW
TYPE 3 - CURB & GUTTER TRANSITION AT PAVED GORE

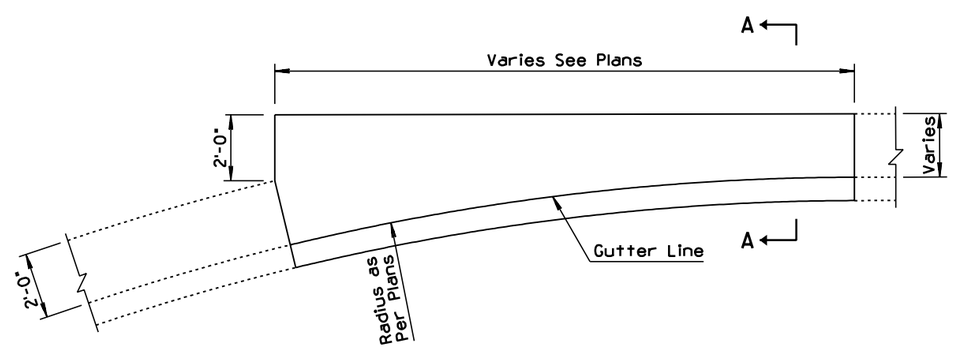

② TYPE 4 - CURB & GUTTER TRANSITION

DESIGN APPROVED Terry H. Otterness	STATE OF ARIZONA DEPARTMENT OF TRANSPORTATION DIVISION OF HIGHWAYS STANDARD DRAWINGS	REV. 7/94
APPROVED FOR DISTRIBUTION Ronald C. Williams	CURB & GUTTER TRANSITIONS	DRAWING NO. C-05.12 Sheet 2 of 3

NO	DESCRIPTION OF REVISIONS	MADE BY	DATE
1	CHANGED TYPE A C&G TO TYPE D C&G	PNB	10/95
2			
3			
4			

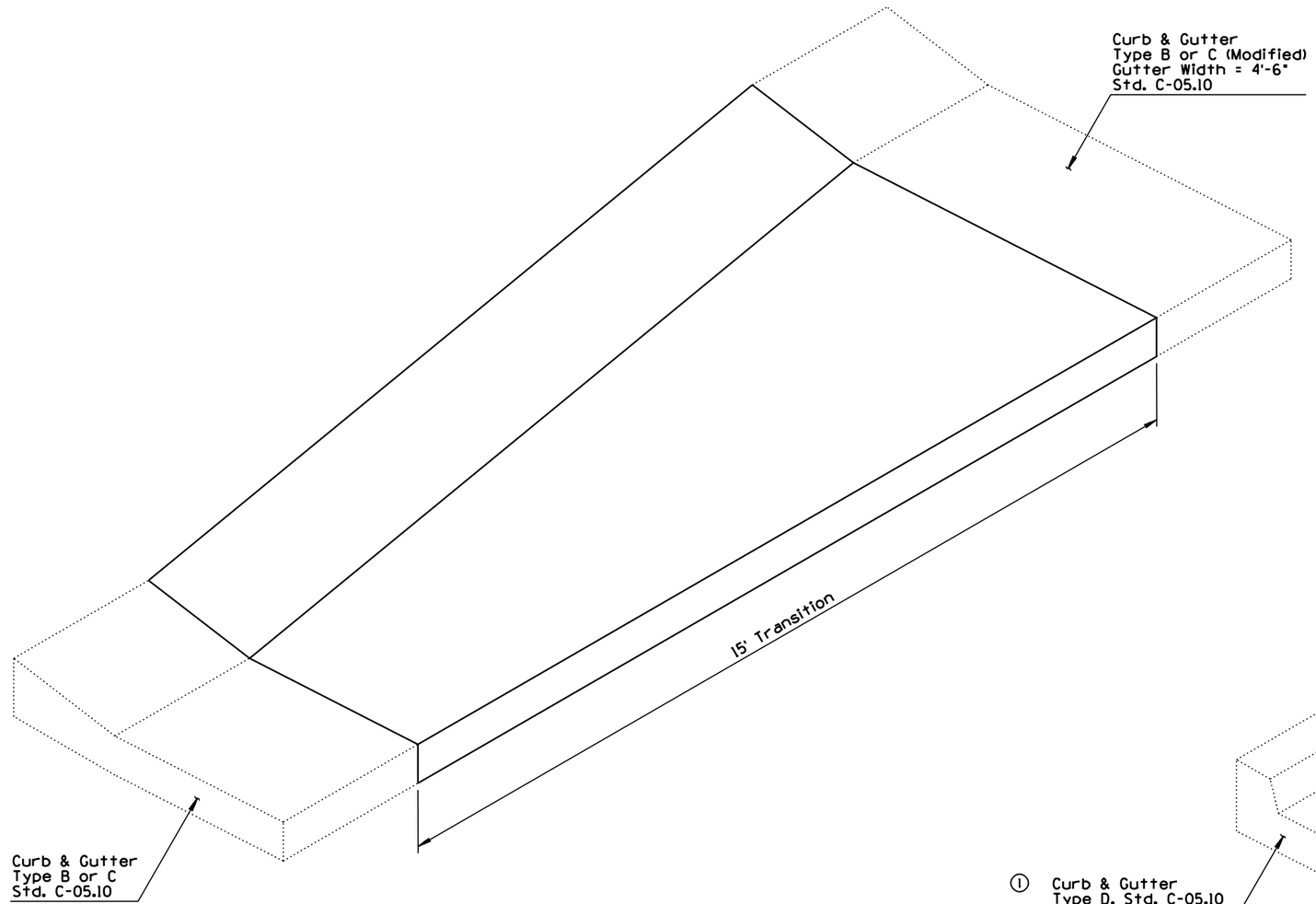

TYPE 5 - CURB & GUTTER TRANSITION

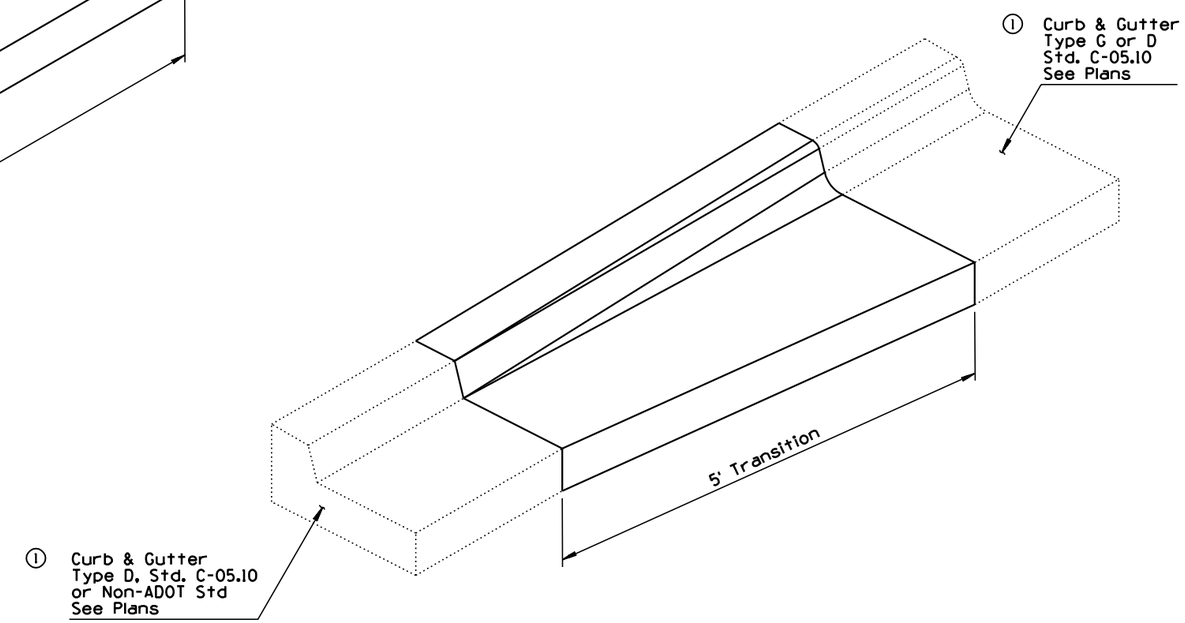

TYPE 6 - CURB & GUTTER TRANSITION

DESIGN APPROVED Terry H. Ottemas APPROVED FOR DISTRIBUTION Ronald C. Williams	STATE OF ARIZONA DEPARTMENT OF TRANSPORTATION DIVISION OF HIGHWAYS STANDARD DRAWINGS	REV. 10/95
	CURB & GUTTER TRANSITIONS	DRAWING NO. C-05.12 Sheet 3 of 3

NO	DESCRIPTION OF REVISIONS	MADE BY	DATE
1	REVISED NOTE	PNB	7/94
2	REVISED SECTION	PNB	7/94
3	REVISED DETAIL	PNB	7/94
4	ADDED NOTE	PNB	7/94
5	ALTERED EXPANSION JOINT PLACEMENT AND NOTE	BAF	7/97
6			
7			
8			

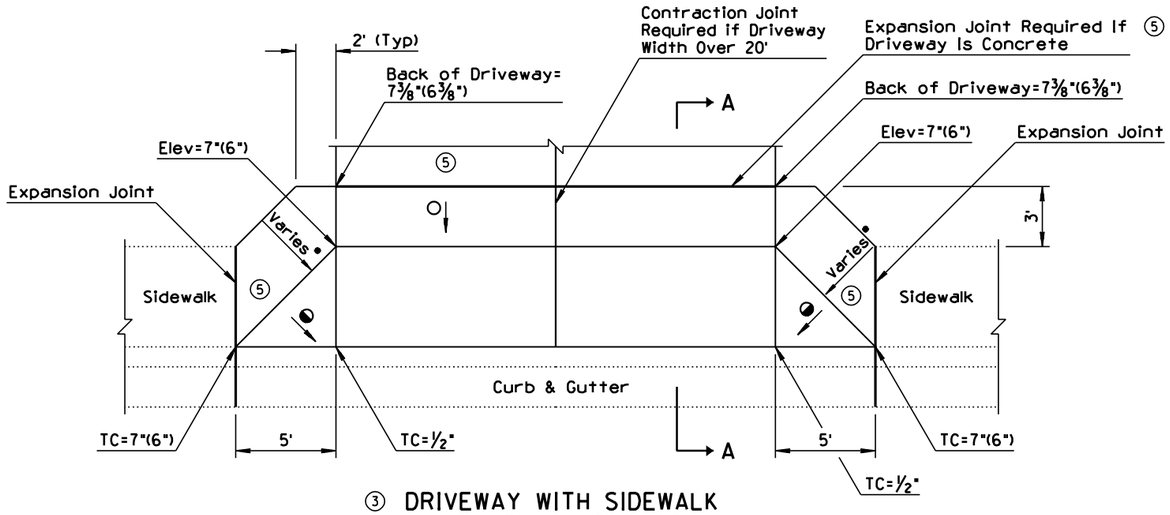

③ DRIVEWAY WITH SIDEWALK ADJACENT TO CURB

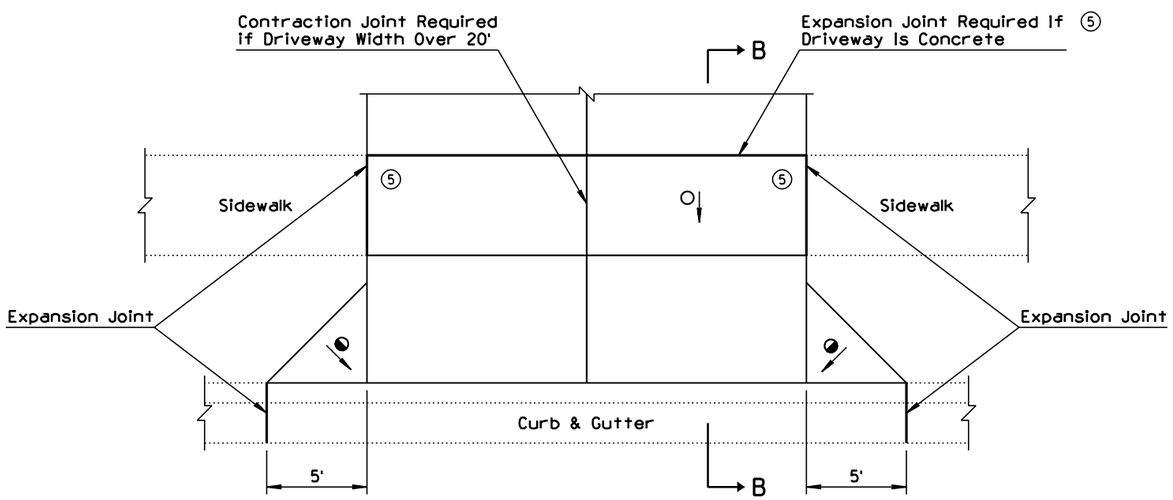

DRIVEWAY WITH SIDEWALK SETBACK

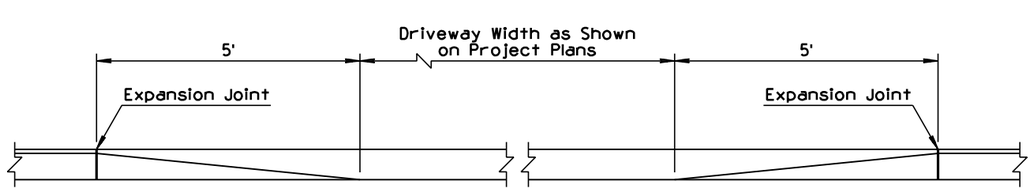

DEPRESSED CURB AT DRIVEWAY ENTRANCE

GENERAL NOTES

1. Unless otherwise specified, driveways shall be 6 inches in depth.
① 2. Two inch deep transverse contraction joints shall be placed in driveways if the driveway width is over 20 feet. If the driveway thickness is greater than 6 inches, then the contraction joint depth shall be T/3, where T is the thickness of the driveway. Joints shall be either formed or sawed. Formed joints shall be finished with a tool having a ¼" radius. See sheet 2 of 2 for the Contraction Joint Detail.
① 3. Expansion joints shall be located between driveways and sidewalks and all abutting structures. The one-half inch joint filler shall extend the full depth of the concrete. See sheet 2 of 2 for the Expansion Joint Detail.
4. Concrete shall be finished by means of a float, then steel trowelled and then broomed with a fine brush in a transverse direction.
④ 5. Top of curb (TC) and driveway elevations shown are in relation to the gutter. Gutter=0".
④ 6. When curb heights of 6" or less are shown on plans, use dimensions shown in ( )'s.
④ 7. When curb heights of 7" or more are shown on plans, see plans.

LEGEND

Cross slope (0.01' Per Ft (Typ))*

Straight grade with downward slope.

* Maximum slope = 0.02' Per Ft.

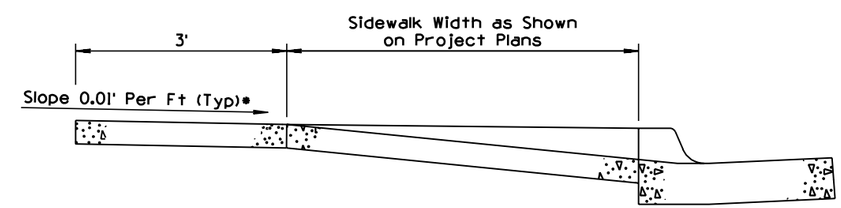

② SECTION A-A

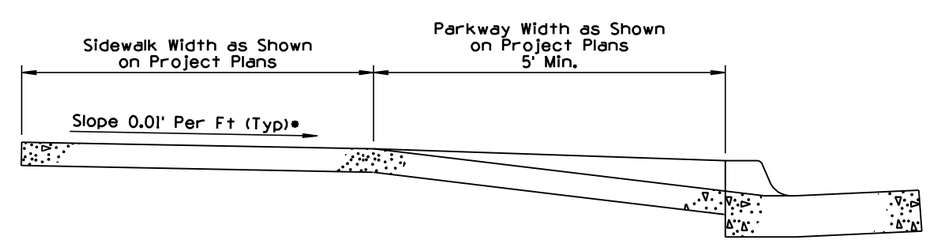

② SECTION B-B

DESIGN APPROVED Terry H. Otterness APPROVED FOR DISTRIBUTION Ronald C. Williams	STATE OF ARIZONA DEPARTMENT OF TRANSPORTATION DIVISION OF HIGHWAYS STANDARD DRAWINGS	REV. 8/98
	CONCRETE DRIVEWAYS & SIDEWALKS DRIVEWAYS	DRAWING NO. C-05.20 Sheet 1 of 2

NO	DESCRIPTION OF REVISIONS	MADE BY	DATE
1			
2			
3			
4			

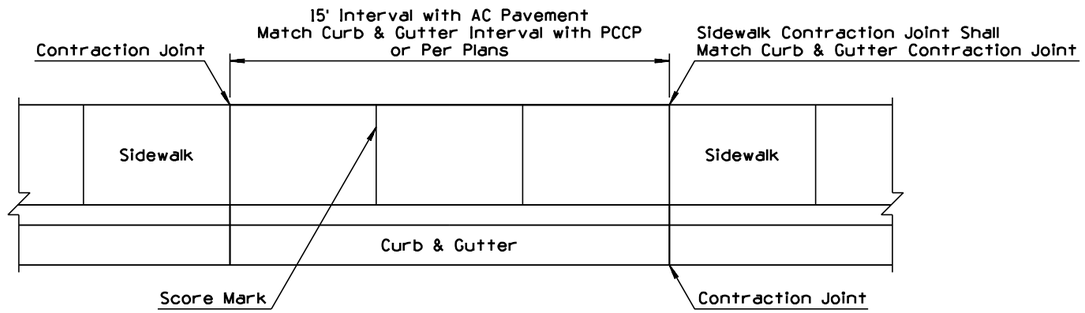

SIDEWALK ADJACENT TO CURB

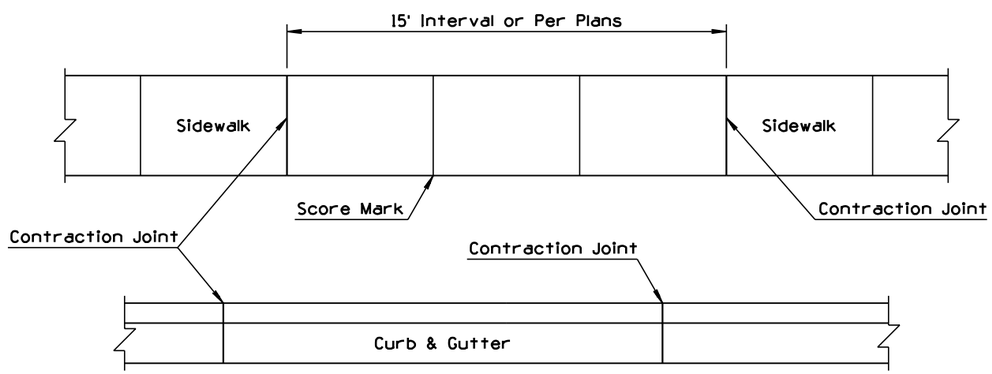

SIDEWALK SETBACK FROM CURB

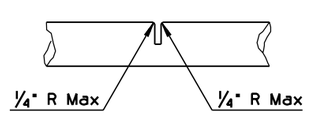

CONTRACTION JOINT DETAIL

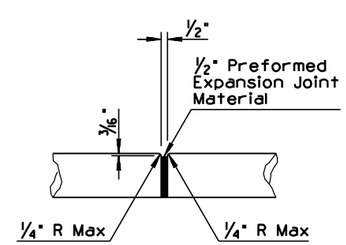

EXPANSION JOINT DETAIL

GENERAL NOTES

1. Unless otherwise specified, sidewalks shall be 4 inches in depth.
2. One inch deep transverse contraction joints shall be placed in sidewalks at intervals of approximately 15 feet or at a spacing that matches adjacent curb and gutter. If the sidewalk is over 7 feet in width, a 2 inch deep longitudinal contraction joint shall be placed in the center of the sidewalk. The maximum area of sidewalk without contraction joints or scoring lines shall be approximately 36 square feet. Joints shall be either formed or sawed. Formed joints shall be finished with a tool having a 1/4" radius.
3. Expansion joints shall be located between sidewalks and driveways and all abutting structures. Expansion joints shall match the joints in the adjacent concrete pavement or existing concrete curb and sidewalk. Maximum length of sidewalk without an expansion joint shall be 60 transverse feet. The one-half inch joint filler shall extend the full depth of the concrete.
4. Concrete shall be finished by means of a float, then steel trowelled and then broomed with a fine brush in a transverse direction.
5. Sidewalks shall be constructed to a desirable width of 5 feet on major streets, a minimum width of 4 feet on residential streets or as shown on the plans.
6. Scoring lines shall be 1/4 inch in depth. They shall be placed at 5 foot spacing when the contraction joint interval is 15 feet and at 6 foot spacing when the contraction joint interval is 12 feet.

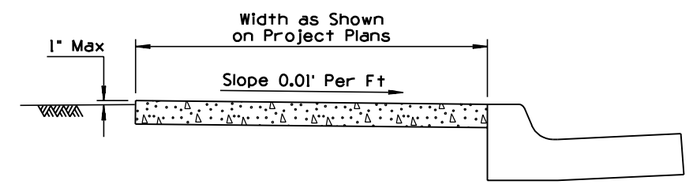

CONCRETE SIDEWALK ADJACENT TO CURB

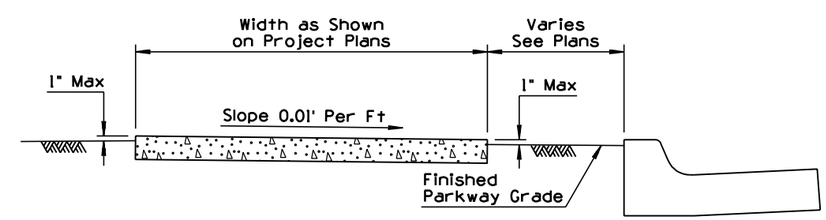

CONCRETE SIDEWALK SETBACK FROM CURB

DESIGN APPROVED Terry H. Otterness APPROVED FOR DISTRIBUTION Ronald C. Williams	STATE OF ARIZONA DEPARTMENT OF TRANSPORTATION DIVISION OF HIGHWAYS STANDARD DRAWINGS	7/94
	CONCRETE DRIVEWAYS & SIDEWALKS SIDEWALKS	DRAWING NO. C-05.20 Sheet 2 of 2

NO	DESCRIPTION OF REVISIONS	MADE BY	DATE
1	REVISED TO SHOW CORRECT ORIENTATION OF THE GROOVING	JNP	4/00
2			
3			
4			

Note to Designer:
The sidewalk standard drawing series C-05.30 has been developed for new construction. Where retrofits to existing sidewalks are needed or other special site conditions apply such that these standards cannot be used, separate plans details considering the ADA guidelines shall be provided.

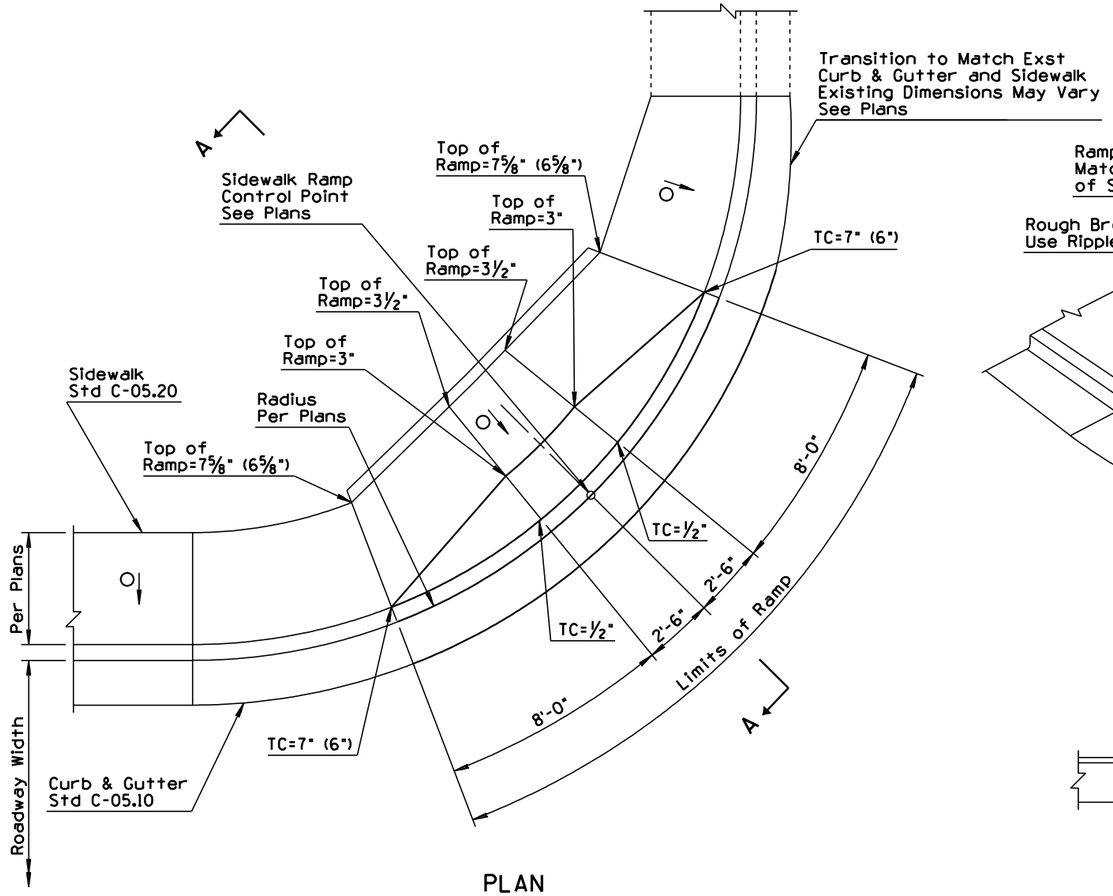

PLAN

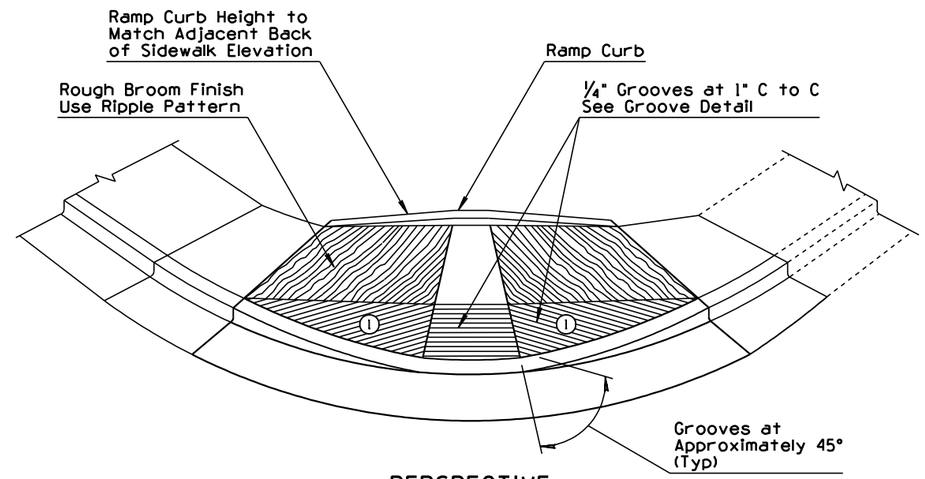

PERSPECTIVE

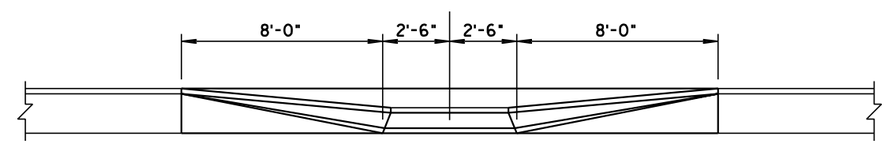

ELEVATION
DEPRESSED CURB AT SIDEWALK RAMP

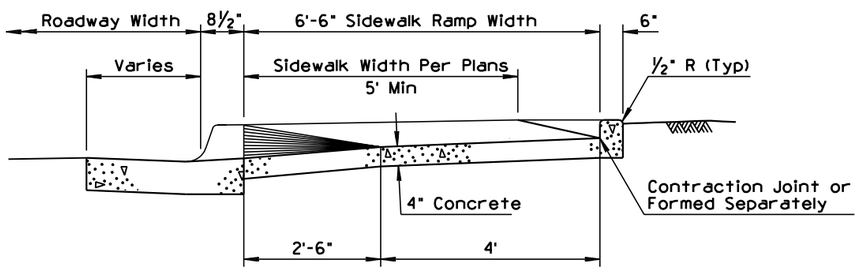

SECTION A-A

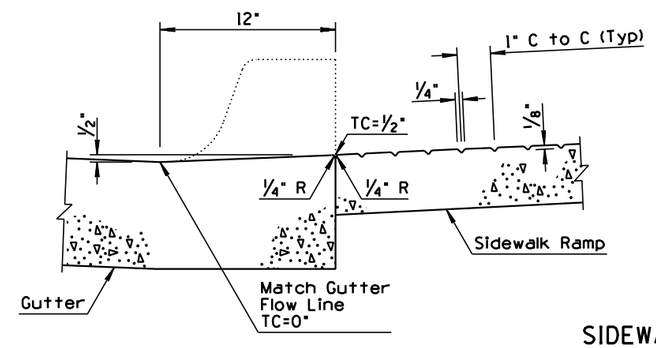

GROOVE DETAIL

GENERAL NOTES

1. Top of curb (TC) and top of ramp elevations shown are in relation to the gutter and are located radially. Gutter=0".
2. See Std C-05.10 and C-05.20 for joint requirements.
3. When curb heights of 6" or less are shown on plans, use dimensions shown in ( )'s.
4. When curb heights of greater than 7" are shown on plans, see plans and ADA requirements.

LEGEND

O→ Cross slope (0.01' Per Ft (Typ))*

* Maximum slope = 0.02' Per Ft.

SIDEWALK RAMP WITH PEDESTRIAN BYPASS

DESIGN APPROVED: Terry H. Otterness	STATE OF ARIZONA DEPARTMENT OF TRANSPORTATION DIVISION OF HIGHWAYS STANDARD DRAWINGS	REV. 4/00
APPROVED FOR DISTRIBUTION: Ronald C. Williams	SIDEWALK RAMP TYPE 1	DRAWING NO. C-05.30 Sheet 1 of 6

NO	DESCRIPTION OF REVISIONS	MADE BY	DATE
1	REVISED SHEET NUMBER	JNP	8/99
2	REVISED TO SHOW THAT SIDEWALK IS NOT CONTINUED	JNP	8/99
3	ADDED TITLE	JNP	8/99
4	ADDED NOTE	JNP	8/99

NO	DESCRIPTION OF REVISIONS	MADE BY	DATE
5	REVISED DRAWING	JNP	8/99
6	REVISED DIMENSION	JNP	8/99
7			
8			

④ Note to Designer:
The standard drawing series C-05.30 has been developed for new construction. Where retrofitting existing sidewalks are needed or other special site conditions apply such that these standards cannot be used, separate plans details considering the ADA guidelines shall be provided.

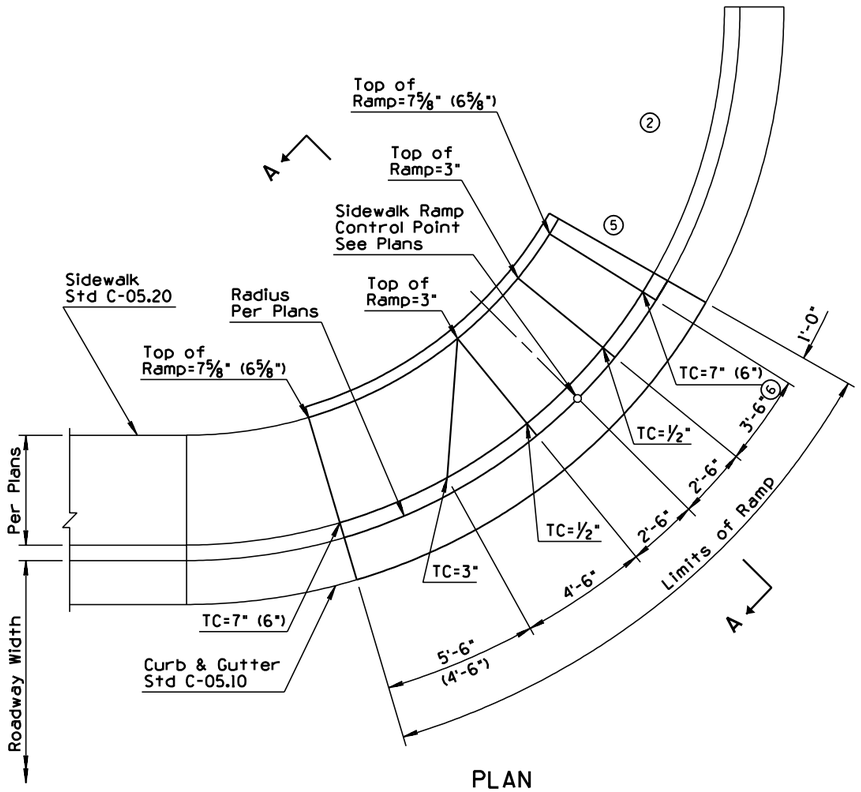

PLAN

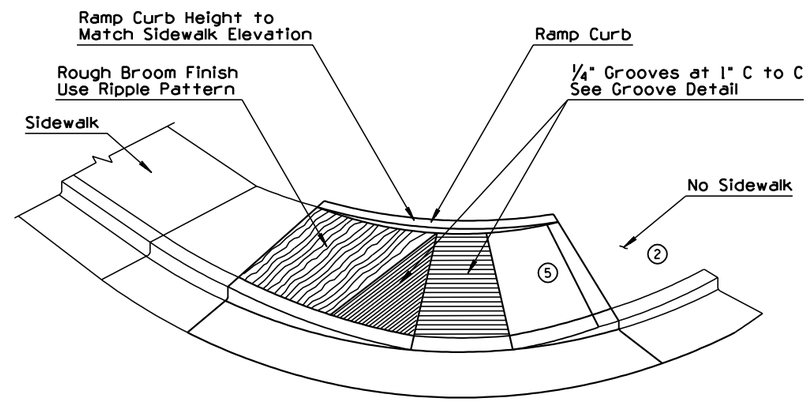

PERSPECTIVE

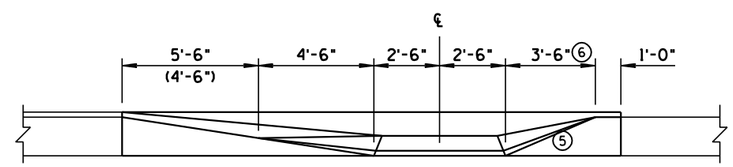

ELEVATION
DEPRESSED CURB AT SIDEWALK RAMP

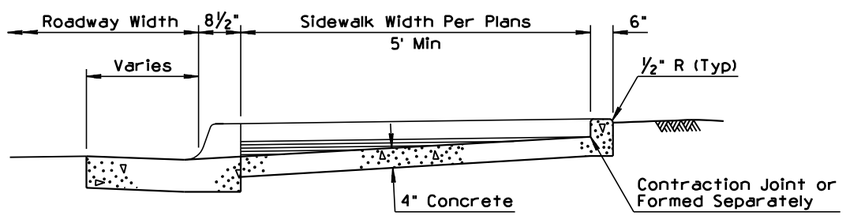

SECTION A-A

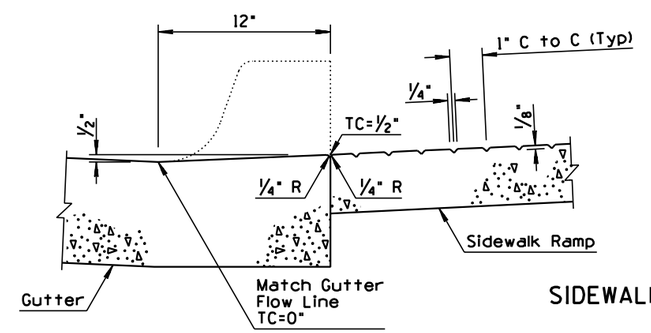

GROOVE DETAIL

GENERAL NOTES

④ 1. For use when sidewalk is not continuous both sides. If sidewalk is anticipated in the future, utilize Type 1 or Type 6 Ramp.

2. Top of curb (TC) and top of ramp elevations shown are in relation to the gutter and are located radially. Gutter=0".

3. See Std C-05.10 and C-05.20 for joint requirements.

4. When curb heights of 6" or less are shown on plans, use dimensions shown in ( )'s.

5. When curb heights of greater than 7" are shown on plans, see plans and ADA requirements.

SIDEWALK RAMP WITHOUT PEDESTRIAN BYPASS ③

DESIGN APPROVED Terry H. Otterness	STATE OF ARIZONA DEPARTMENT OF TRANSPORTATION DIVISION OF HIGHWAYS STANDARD DRAWINGS	REV. 8/99
APPROVED FOR DISTRIBUTION Ronald C. Williams	SIDEWALK RAMP TYPE 2	DRAWING NO. C-05.30 ① Sheet 2 of 6

NO	DESCRIPTION OF REVISIONS	MADE BY	DATE
1	REVISED SHEET NUMBER	JNP	8/99
2	ADDED TITLE	JNP	8/99
3	ADDED NOTE	JNP	8/99
4	DELETED NOTE	JNP	8/99
5	REVISED DIMENSION	JNP	8/99
6	REVISED DRAWING	JNP	8/99
7			
8			

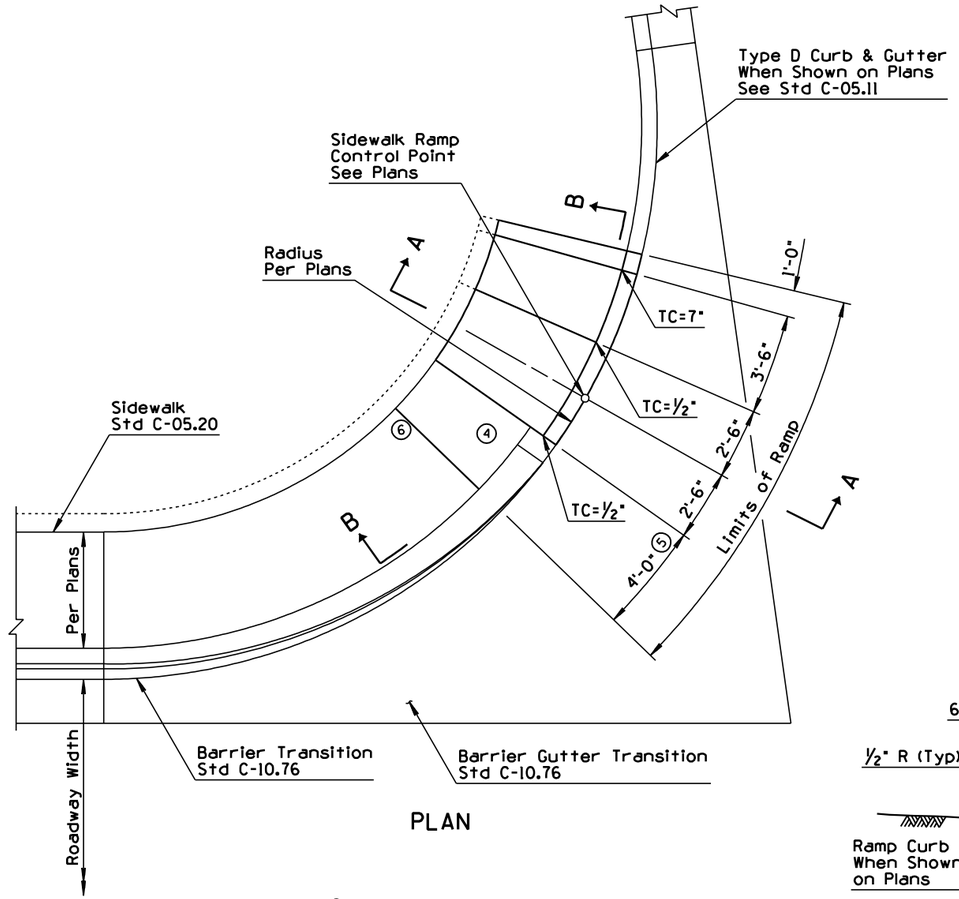

PLAN

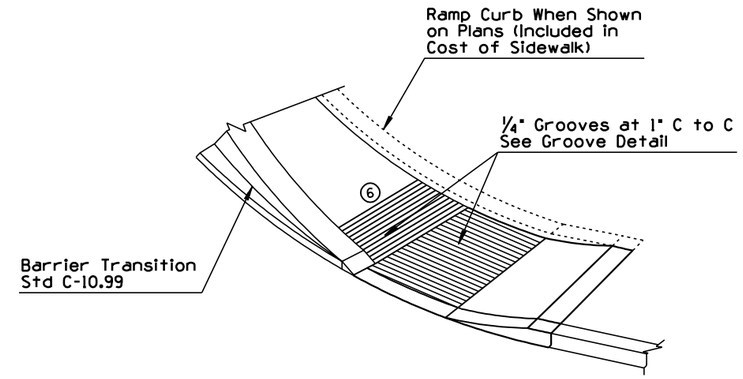

PERSPECTIVE

GENERAL NOTES

1. Top of curb (TC) elevations shown are in relation to the gutter and are located radially. Gutter=0".
2. See Std C-05.10 and C-05.20 for joint requirements.

④

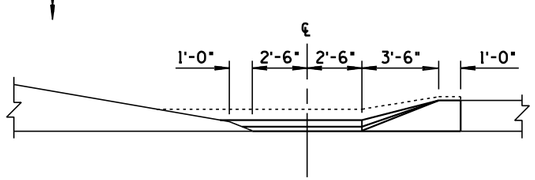

ELEVATION
DEPRESSED CURB AT SIDEWALK RAMP

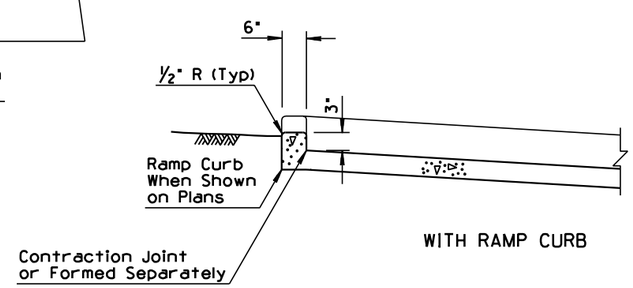

WITH RAMP CURB

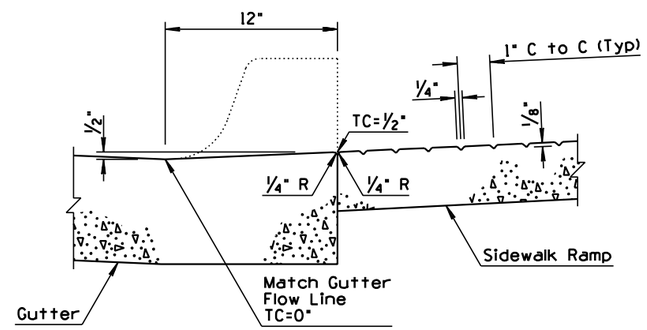

GROOVE DETAIL

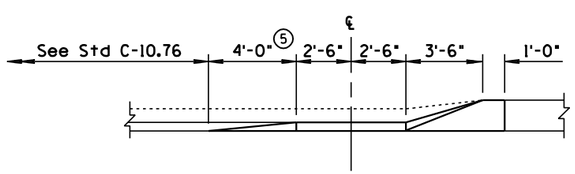

SECTION B-B

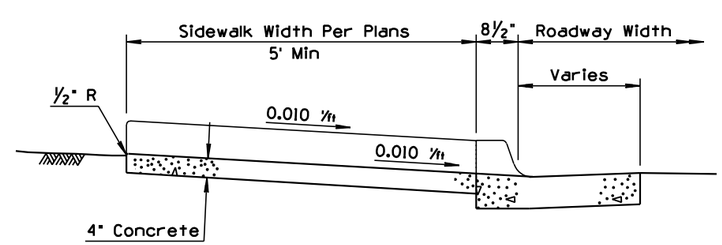

WITHOUT RAMP CURB

SECTION A-A

SIDEWALK RAMP AT BARRIER TERMINUS ②
SIDEWALK BEHIND BARRIER

③ Note to Designer:
The sidewalk standard drawing series C-05.30 has been developed for new construction. Where retrofits to existing sidewalks are needed or other special site conditions apply such that these standards cannot be used, separate plans details considering the ADA guidelines shall be provided.

DESIGN APPROVED: Terry H. Otterness	STATE OF ARIZONA DEPARTMENT OF TRANSPORTATION DIVISION OF HIGHWAYS STANDARD DRAWINGS	REV. 8/99
APPROVED FOR DISTRIBUTION: Ronald C. Williams	SIDEWALK RAMP TYPE 3	DRAWING NO. C-05.30 ① Sheet 3 of 6

NO	DESCRIPTION OF REVISIONS	MADE BY	DATE
1	REVISED SHEET NUMBER	JNP	8/99
2	REVISED DIMENSION	JNP	8/99
3	ADDED TITLE	JNP	8/99
4	ADDED NOTE	JNP	8/99
5	ADDED SYMBOL	JNP	8/99
6			
7			
8			

④ Note to Designer:
The standard drawing series C-05.30 has been developed for new construction. Where retrofitting existing sidewalks are needed or other special site conditions apply such that these standards cannot be used, separate plans details considering the ADA guidelines shall be provided.

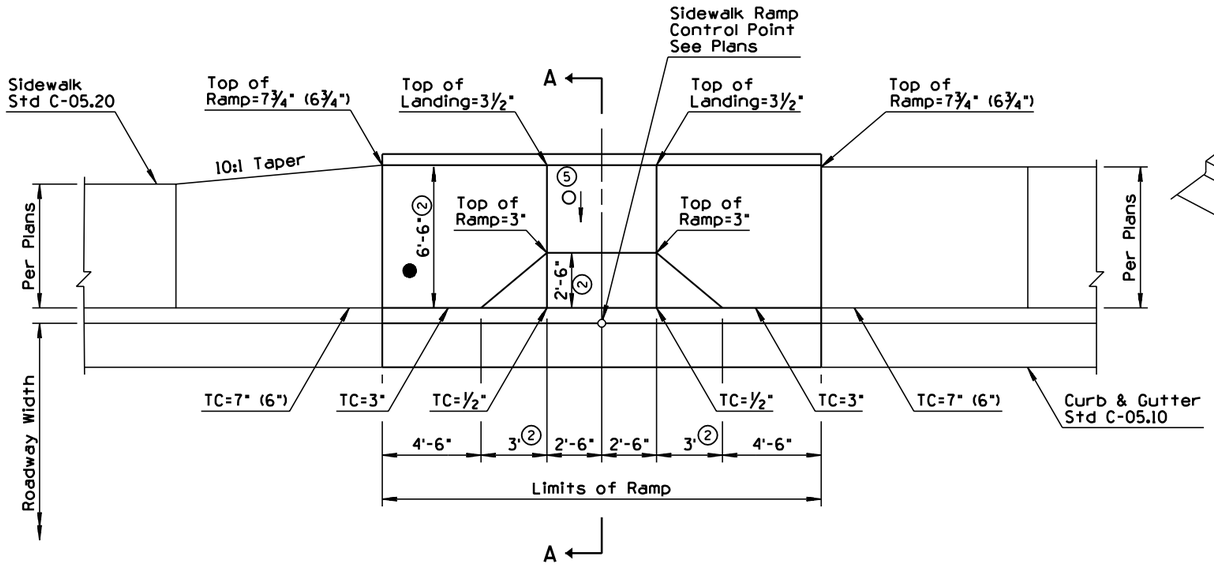

PLAN

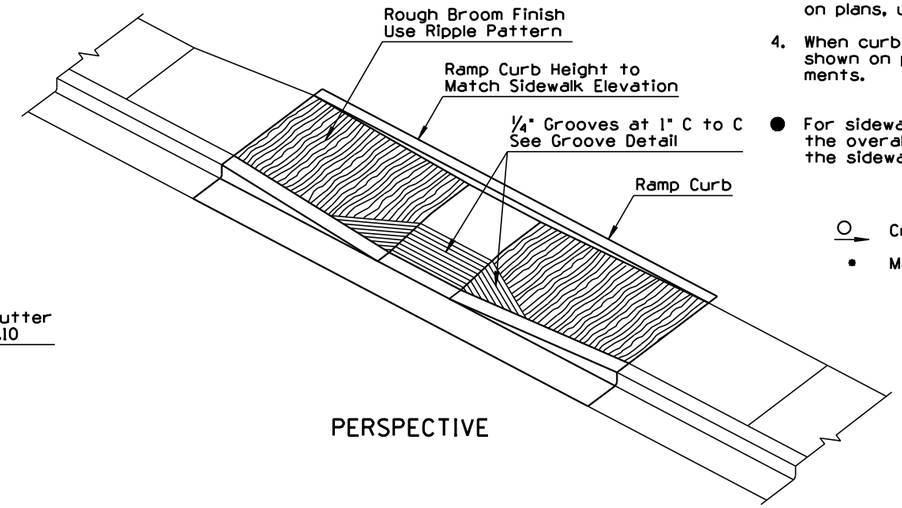

PERSPECTIVE

GENERAL NOTES

1. Top of curb (TC) and top of ramp elevations shown are in relation to the gutter. Gutter=0".
2. See Std C-05.10 and C-05.20 for joint requirements
3. When curb heights of 6" or less are shown on plans, use dimensions shown in ( )'s.
4. When curb heights of greater than 7" are shown on plans, see plans and ADA requirements.

● For sidewalk widths greater than 6'-6", ② the overall sidewalk ramp width shall match the sidewalk width.

④ LEGEND

○→ Cross slope (0.01' Per Ft (Typ))●

● Maximum slope = 0.02' Per Ft.

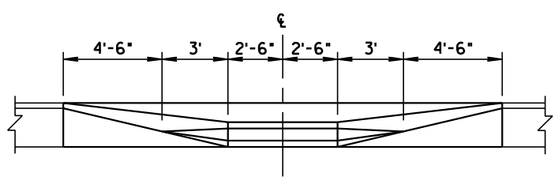

ELEVATION
DEPRESSED CURB AT SIDEWALK RAMP

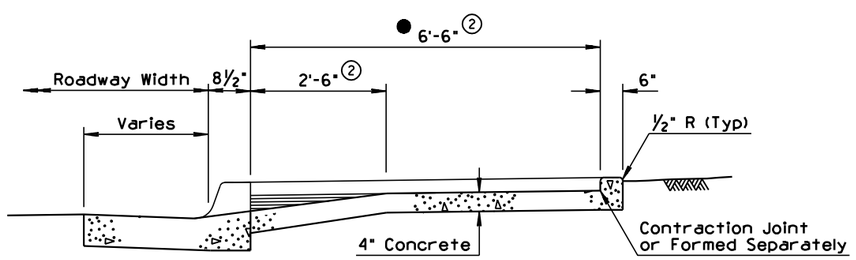

SECTION A-A

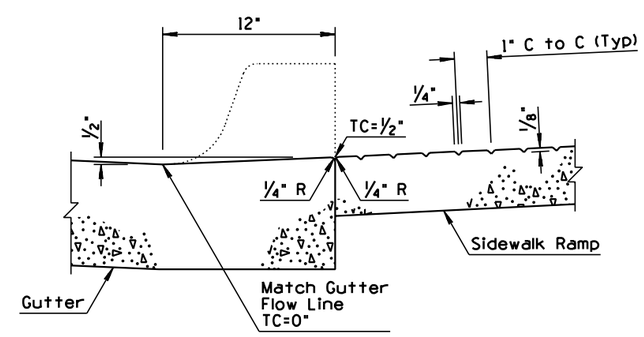

GROOVE DETAIL

SIDEWALK RAMP AT MIDBLOCK ③

DESIGN APPROVED Terry H. Otterness	STATE OF ARIZONA DEPARTMENT OF TRANSPORTATION DIVISION OF HIGHWAYS STANDARD DRAWINGS	REV. 8/99
APPROVED FOR DISTRIBUTION Ronald C. Williams	SIDEWALK RAMP TYPE 4	DRAWING NO. C-05.30 ① Sheet 4 of 6

NO	DESCRIPTION OF REVISIONS	MADE BY	DATE
1	REVISED SHEET NUMBER; CHANGED TO TYPE 5 FROM TYPE 1	JNP	8/99
2	REVISED TITLE	JNP	8/99
3	ADDED TITLE	JNP	8/99
4	ADDED NOTE	JNP	8/99

④ Note to Designer:
A standard drawing series C-05.30 has been developed for new construction. Where retrofits to existing sidewalks are needed or other special site conditions apply such that these standards cannot be used, separate plans details considering the ADA guidelines shall be provided.

GENERAL NOTES

1. Top of curb (TC) and top of ramp elevations shown are in relation to the gutter. Gutter=0".
2. See Std C-05.10 and C-05.20 for joint requirements.
3. When curb heights of 6" are shown on plans, use dimensions shown in ( )'s.
4. If field modification is required, bottom width shall be 4' minimum, as per ADA requirements.

● Use type A1 curb if median is to be landscaped.

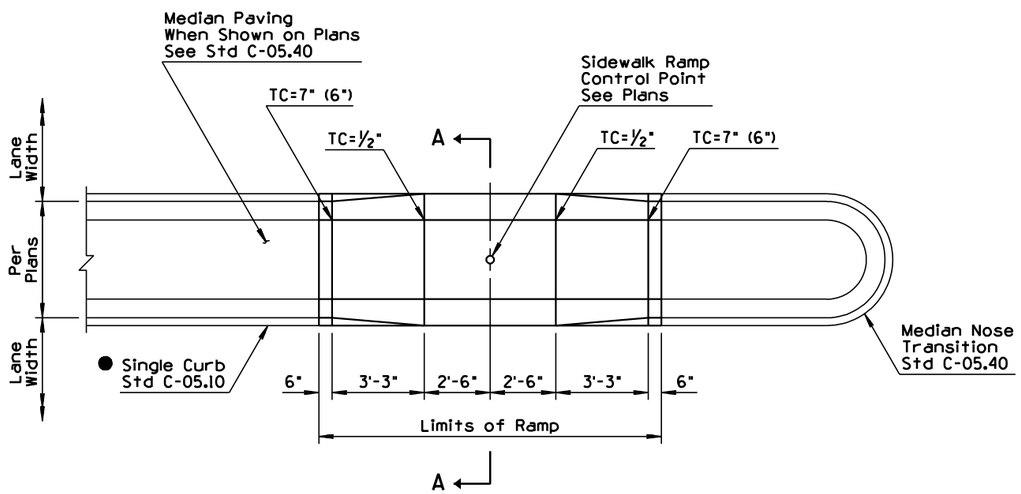

PLAN

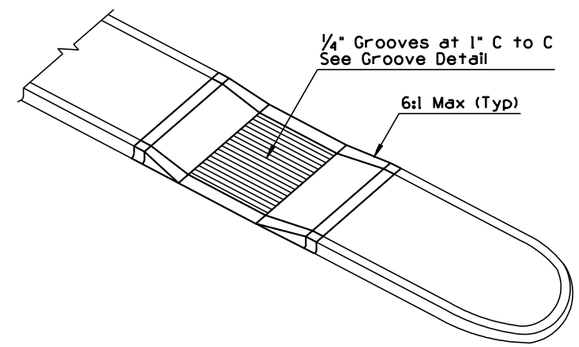

PERSPECTIVE

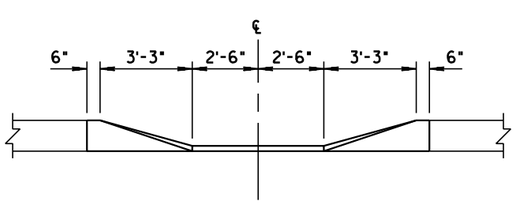

ELEVATION
DEPRESSED CURB AT SIDEWALK RAMP

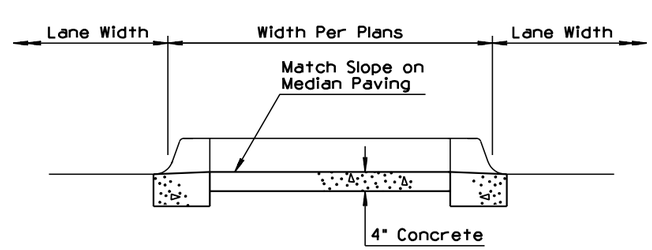

SECTION A-A

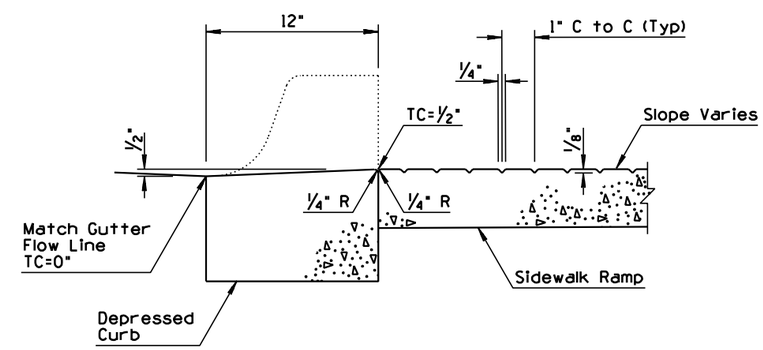

GROOVE DETAIL

SIDEWALK RAMP AT MEDIAN ISLAND CROSSING ③

DESIGN APPROVED Jerry H. Otteness	STATE OF ARIZONA DEPARTMENT OF TRANSPORTATION DIVISION OF HIGHWAYS STANDARD DRAWINGS	REV. 8/99
APPROVED FOR DISTRIBUTION Ronald C. Williams	SIDEWALK RAMP TYPE 5 ②	DRAWING NO. C-05.30 ① Sheet 5 of 6

NO	DESCRIPTION OF REVISIONS	MADE BY	DATE
1	REVISED TO SHOW CORRECT ORIENTATION OF THE GROOVING	JNP	4/00
2			
3			
4			

Note to Designer:
The sidewalk standard drawing series C-05.30 has been developed for new construction. Where retrofits to existing sidewalks are needed or other special site conditions apply such that these standards cannot be used, separate plans details considering the ADA guidelines shall be provided.

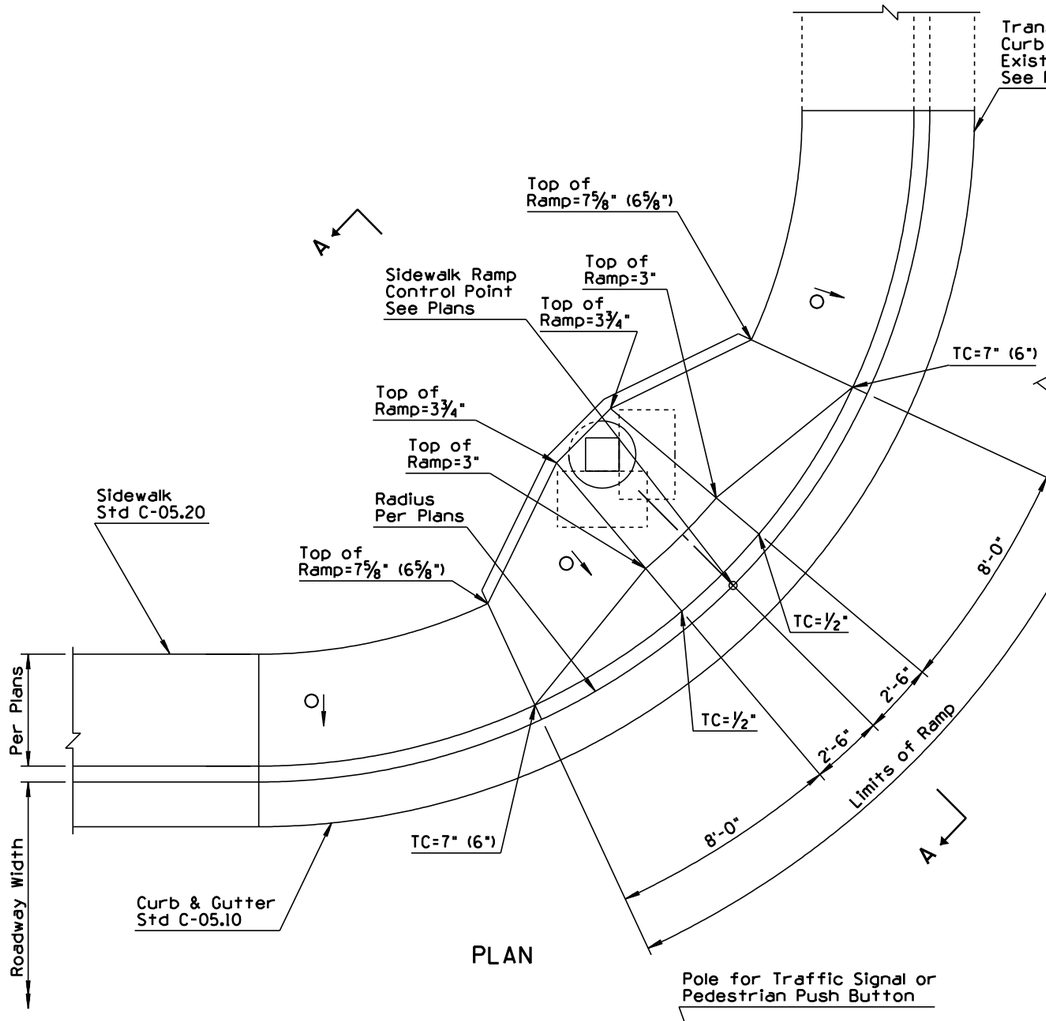

PLAN

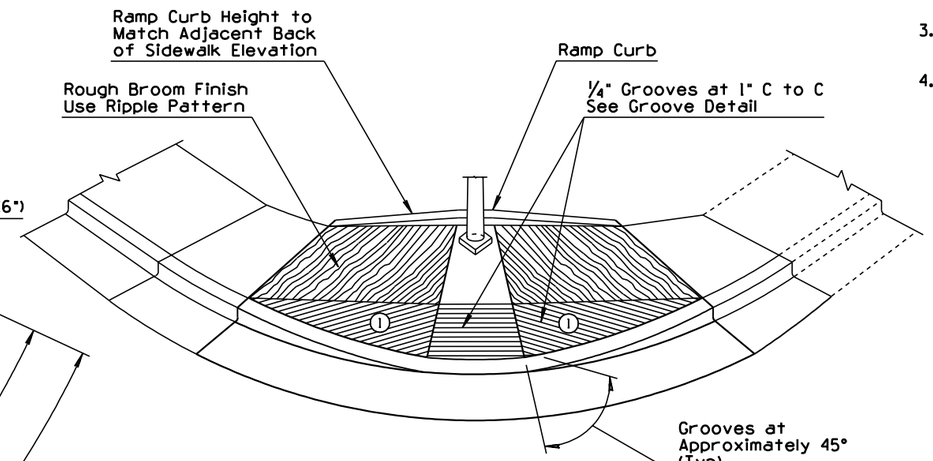

PERSPECTIVE

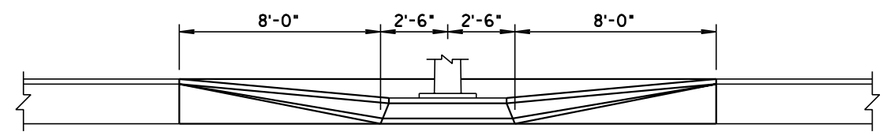

ELEVATION
DEPRESSED CURB AT SIDEWALK RAMP

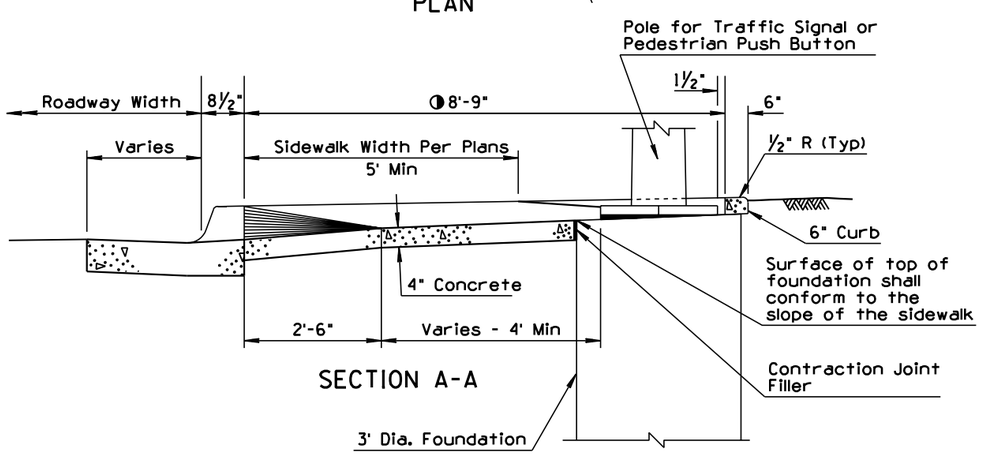

SECTION A-A

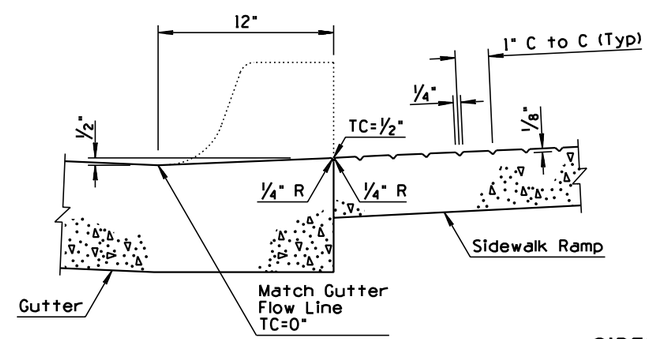

GROOVE DETAIL

GENERAL NOTES

1. Top of curb (TC) and top of ramp elevations shown are in relation to the gutter and are located radially. Gutter=0".
2. See Std C-05.10 and C-05.20 for joint requirements.
3. When curb heights of 6" or less are shown on plans, use dimensions shown in ( )'s.
4. When curb heights of greater than 7" are shown on plans, see plans and ADA requirements.

LEGEND

- Cross slope (0.01' Per Ft (Typ))*
- * Maximum slope = 0.02' Per Ft.
- 30" x 48" access area for Pedestrian Push Button
- Control for Field Layout

SIDEWALK RAMP WITH PEDESTRAIN BYPASS
(FOR USE WITH PEDESTRIAN PUSH BUTTON)

DESIGN APPROVED: Terry H. Otterness	STATE OF ARIZONA DEPARTMENT OF TRANSPORTATION DIVISION OF HIGHWAYS STANDARD DRAWINGS	REV. 4/00
APPROVED FOR DISTRIBUTION: Ronald C Williams	SIDEWALK RAMP TYPE 6	DRAWING NO. C-05.30 Sheet 6 of 6

NO	DESCRIPTION OF REVISIONS	MADE BY	DATE
1	DELETED CONC MEDIAN ON STRUCTURE DETAIL/ADDED NOTE	TC	1/93
2			
3			
4			

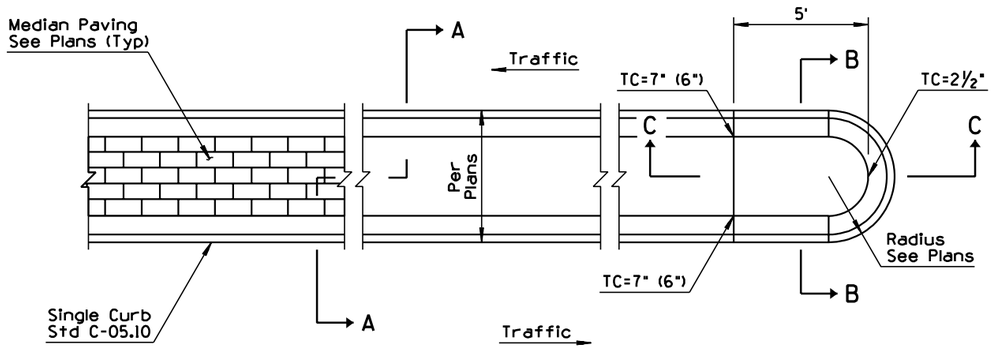

PLAN

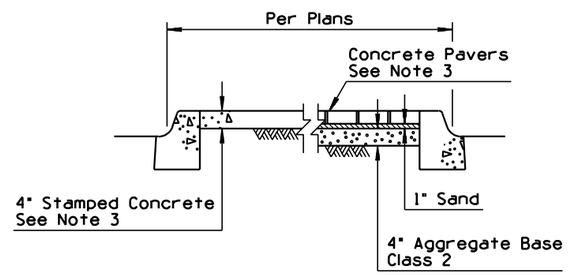

SECTION A-A

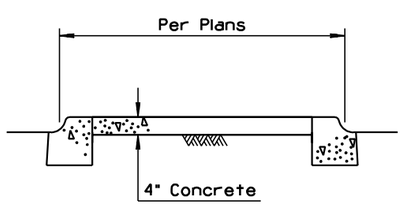

SECTION B-B

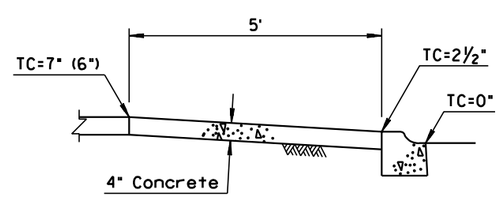

SECTION C-C

GENERAL NOTES

1. Traffic signal foundations, traffic sign foundations and pull boxes for traffic signs and traffic signals shall be installed prior to placement of median paving.
2. See Std C-05.10, C-05.11 and C-05.20 for joint requirements.
3. Decorative median paving shall be stamped concrete, concrete pavers or as specified on the project plans.
4. Decorative median paving shall not be placed on a median nose transition or on a median island on a structure.
5. A 4" x 6" concrete header shall be used to end decorative paving at locations when concrete sidewalk ramps are not present.
6. Median nose transitions shall not be placed on departure ends of raised medians.
7. Top of curb (TC) and top of ramp elevations shown are in relation to the gutter. Gutter=0".
8. When curb heights of 6" are shown on plans, use dimensions shown in ( )'s.
9. (1) See Structure Plans for raised median on structures.

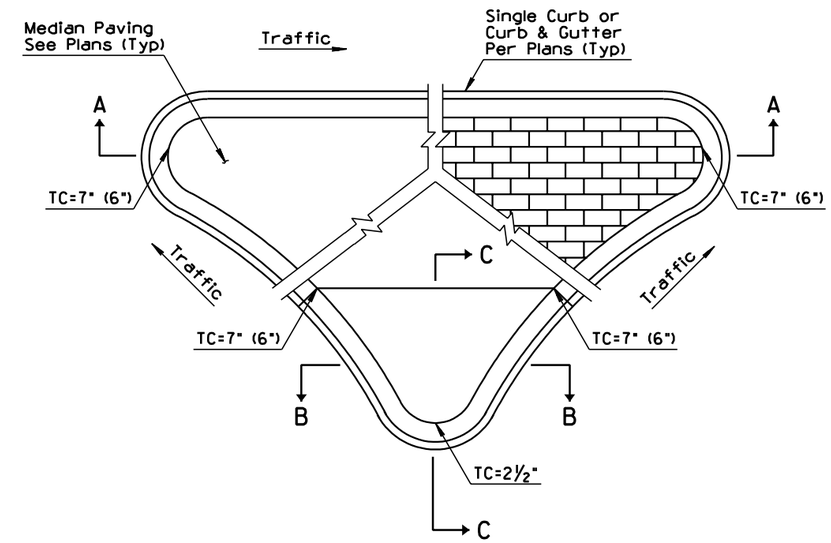

NOSE TRANSITION LAYOUT

DESIGN APPROVED	STATE OF ARIZONA DEPARTMENT OF TRANSPORTATION DIVISION OF HIGHWAYS STANDARD DRAWINGS	REV.
APPROVED FOR DISTRIBUTION	MEDIAN PAVING AND NOSE TRANSITION	DRAWING NO. C-05.40

NO	DESCRIPTION OF REVISIONS	MADE BY	DATE
1	CHANGED REFERENCE FROM NOTE 4 TO NOTE 5	PNB	10/95
2	MODIFIED NOTE	BAF	7/97
3			
4			

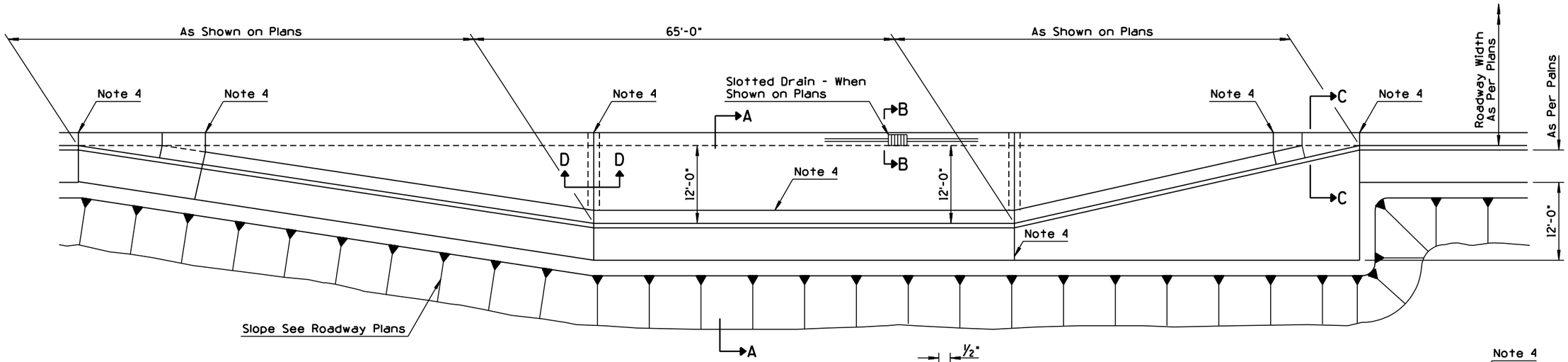

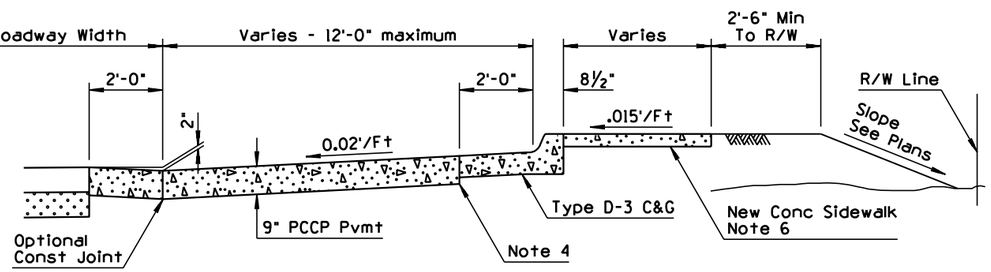

SECTION A-A

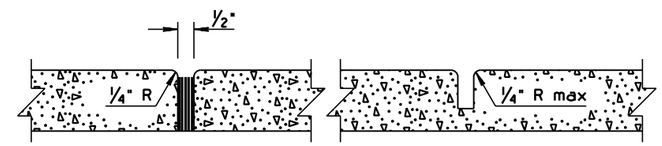

EXPANSION JOINT CONTRACTION JOINT

DETAIL A

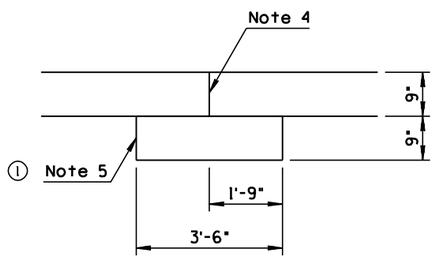

SECTION D-D

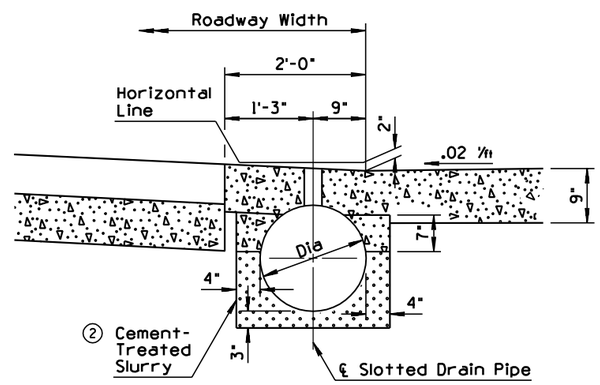

SECTION B-B

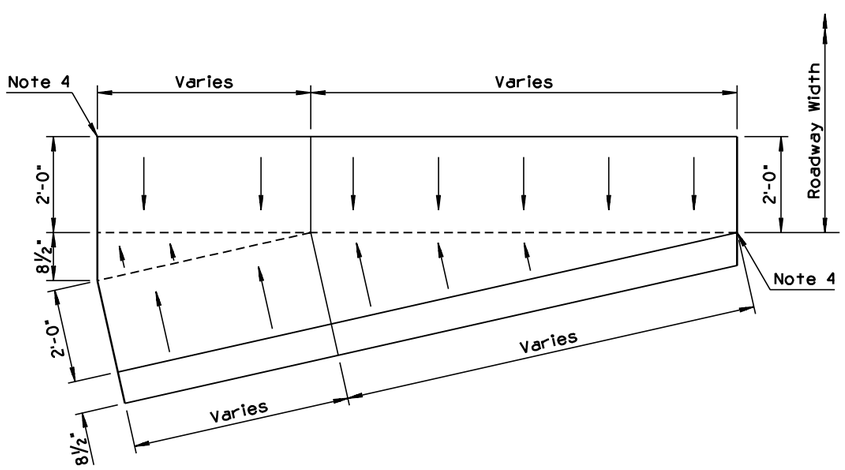

PLAN VIEW OF SECTION C-C

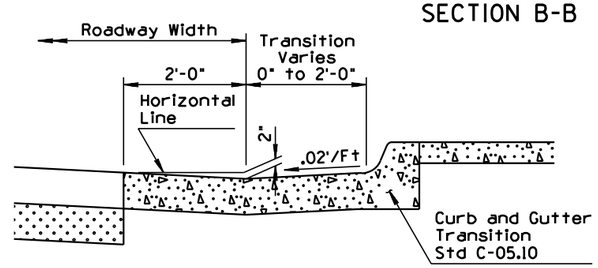

SECTION C-C

GENERAL NOTES

1. The PCCP surfaces within the bus bay area shall be textured transversly. Surface texturing to conform to Section 401.
2. Transverse weakened plane joints shall be constructed at a maximum spacing of 15' and shall align with joints in the concrete curb and gutter.
3. For additional data on slotted drains, See slotted drain Stds C-13.60.
4. For ½" expansion joint with preformed joint fillers, See Detail A.
5. Concrete pad to be poured separately from concrete bus bay pavement.
6. For sidewalk construction details, see Std. C-05.20.

DESIGN APPROVED Terry H. Otterness	STATE OF ARIZONA DEPARTMENT OF TRANSPORTATION DIVISION OF HIGHWAYS STANDARD DRAWINGS	REV. 8/98
APPROVED FOR DISTRIBUTION Ronald C. Williams	CONCRETE BUS BAY	DRAWING NO. C-05.50

NO	DESCRIPTION OF REVISIONS	MADE BY	DATE
1	ADDED NOTE	JNP	8/99
2	REVISED NOTE & REMOVED PREVIOUS TYPE B TURNOUT	RLF	7/01
3			
4			

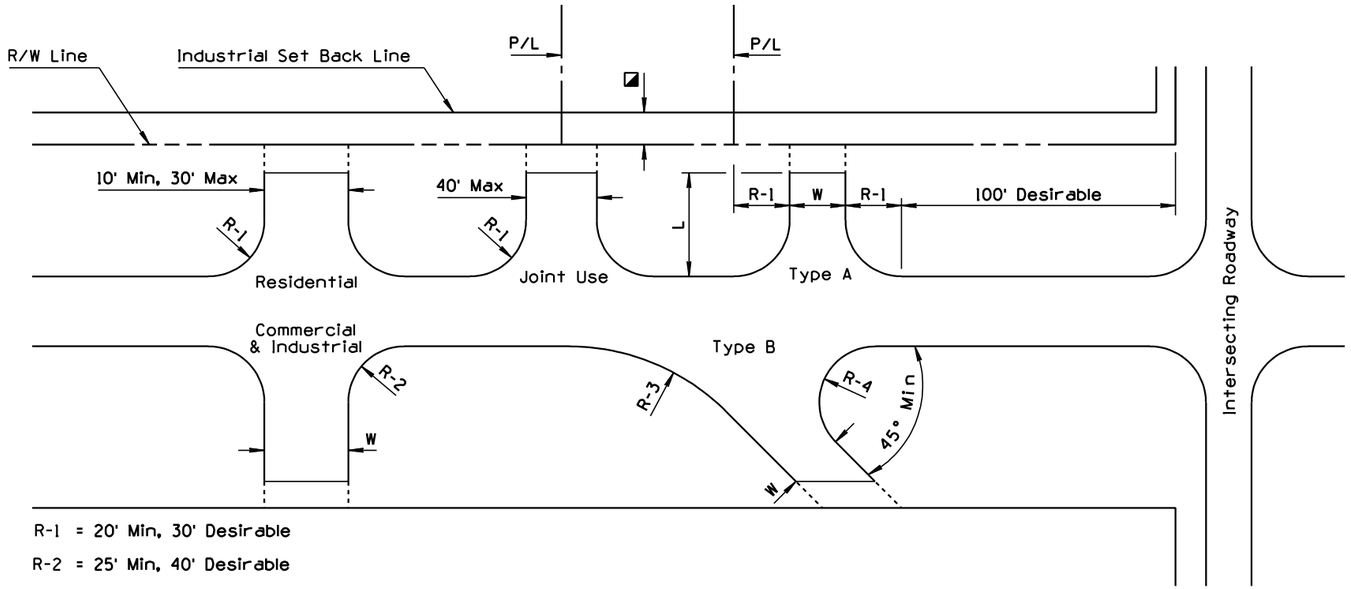

R-1 = 20' Min, 30' Desirable

R-2 = 25' Min, 40' Desirable

R-3 = 80'

R-4 = 20' Min

W = 25' Min, 40' Max

◪ - See Proper City or County Regulation

RURAL DEVELOPMENTS

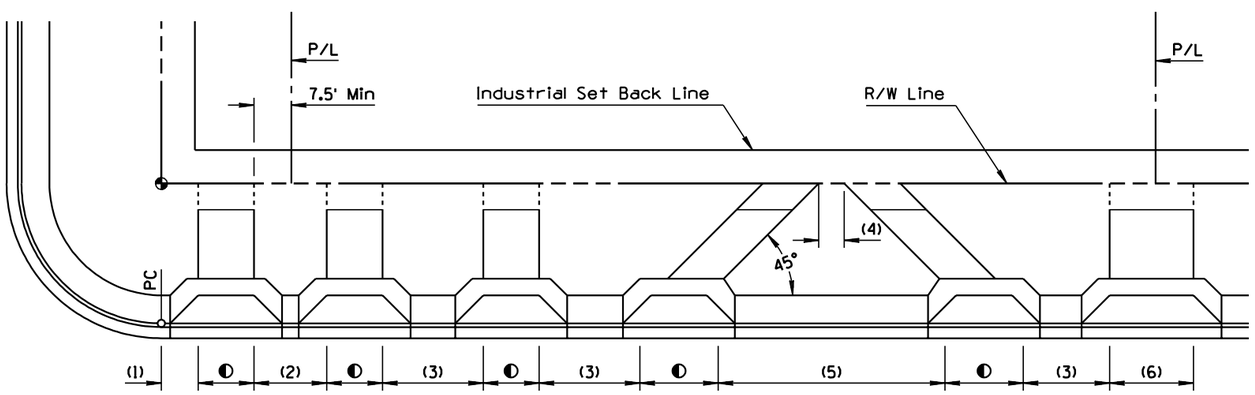

(1) 10' Min, 20' Desirable

(2) 15' Min

(3) 25' Min, 40' Desirable

(4) 40' Min

(5) One Way Couplet for Use Only on One Way Roadways

(6) 40' Max Joint Use Driveways

◐ Residential - 10' Min, 30' Max

◐ Commercial - One Way: 15' Min, 30' Max
Two Way: 25' Min, 40' Max

◐ Industrial - 20' Min, 40' Max

URBAN DEVELOPMENTS

GENERAL NOTES

1. Driveway types:

   Residential - one providing access to a single family residence, to a duplex, or to an apartment building containing five or fewer dwelling units.

   Commercial - one providing access to an office, retail or institutional building or to an apartment building having more than five dwelling units.

   Industrial - one directly serving a substantial number of truck movements to and from loading docks of an industrial facility, warehouse or truck terminal.

2. Joint use driveways may become desirable for landowners of adjacent properties to service both properties. If this is the case, only one of the two adjacent landowners need apply for the access permit, but a notorized written mutual agreement, signed by all parties invloved, must (1) accompany the application form. The property line can be located anywhere, in reference to the driveway, depending on mutual agreement.

3. Driveways for high volume traffic generators shall be approved individually by Traffic Engineering section.

4. Driveways with curb returns in urban areas shall be installed only with the approval of Traffic Engineering section.

5. Driveways and depressed curbs shall be located as noted on plans or as directed by the Engineer.

6. Drainage structures shall be provided under driveways where necessary.

7. Dimensions indicated as minimum shall be avoided whenever possible in favor of those indicated as desirable.

(2) 8. The Type "A" turnout is the preferable turnout design. Type "B" shall only be used when absolutely necessary.

9. Paved turnouts, plans notation, will be W X L, surface material, type and standard. Example: 20' X 30' ACTO, Type A, Std C-06.10. Show radius (R) graphically.

10. Construction of curb, gutter, sidewalk and drainage facilities in urban areas by the permittee along that portion of the highway frontage under permit application, may be a stipulation of the permit approval if there appears to be reasonable need.

11. Excavation or embankment for turnouts shall be included in quantities for main roadways.

12. Base material shall be the same as that shown for main roadway, unless otherwise noted.

13. Desirable sideslope rates for rural turnouts are 6:1.

DESIGN APPROVED John L. Lewis	STATE OF ARIZONA DEPARTMENT OF TRANSPORTATION DIVISION OF HIGHWAYS STANDARD DRAWINGS	REV. 7/01
APPROVED FOR DISTRIBUTION Ronald C. Williams	DRIVEWAY & TURNOUT LAYOUTS	DRAWING NO. C-06.10 Sheet 1 of 2

NO	DESCRIPTION OF REVISIONS	MADE BY	DATE
1	ROTATED DRIVEWAY BEYOND SIDEWALK	PNB	10/95
2	ADDED NOTE	PNB	10/95
3	MODIFIED TITLE	BAF	8/98
4			

GENERAL NOTES

1. Grade as shown on plans or as negotiated between Property Owner and Engineer.
2. When field conditions require modifications to plans, contact Design Engineer for assistance.
3. See Sheet 1 of 2 for all other General Notes.

◑ Breakangle greater than 6% requires a vertical curve, L=(10' Min). Vertical curve shall not encroach on roadway or sidewalk.

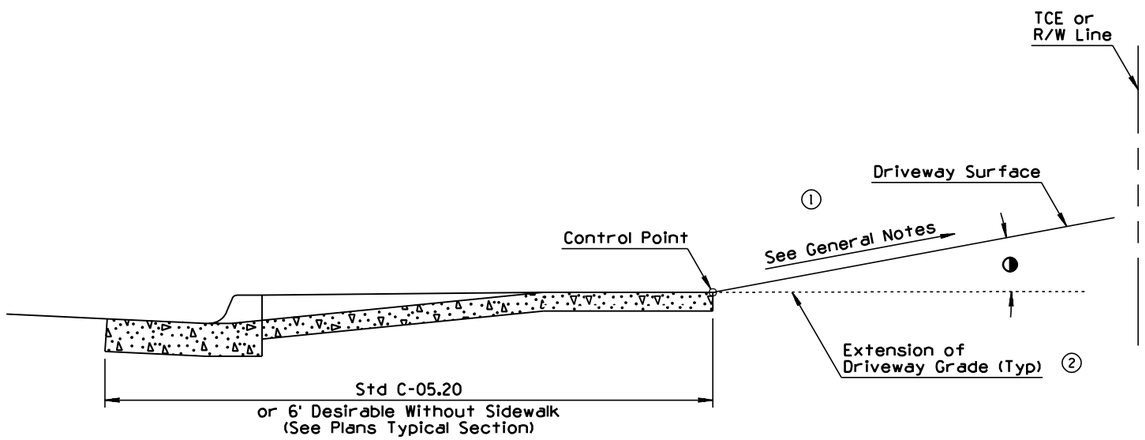

URBAN CROSS SECTION
(UP GRADE)

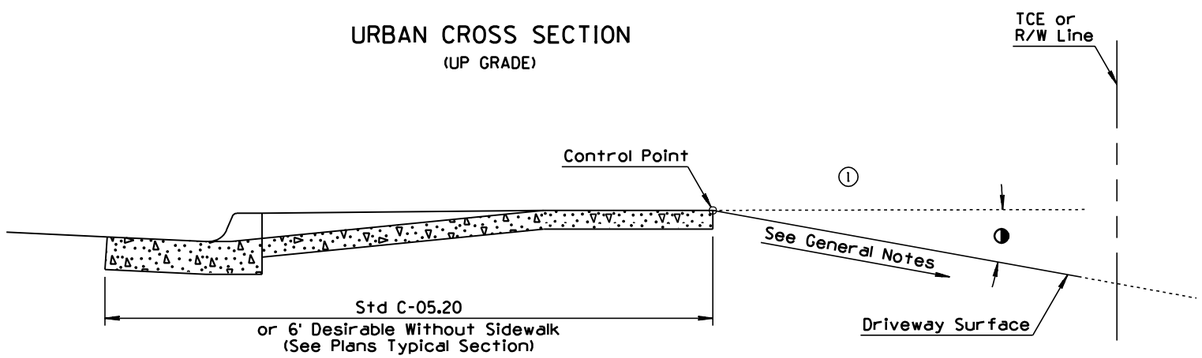

URBAN CROSS SECTION
(DOWN GRADE)

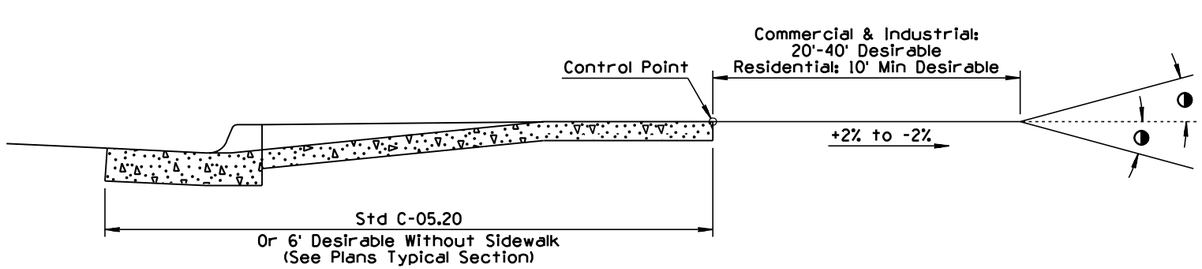

DESIRABLE URBAN CROSS SECTION

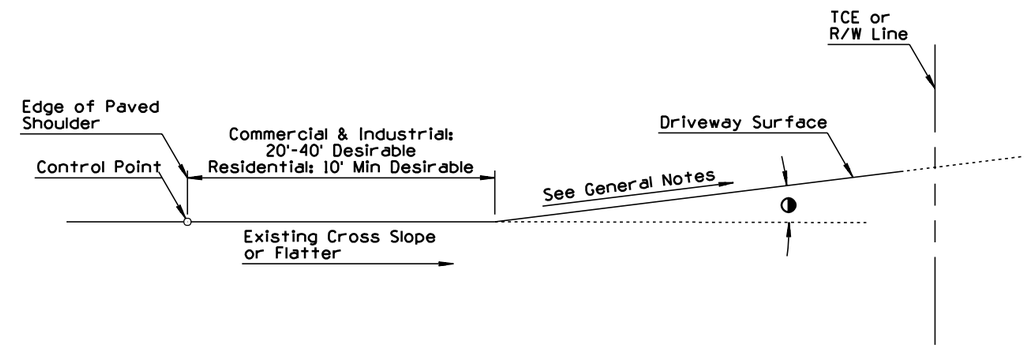

③ RURAL CROSS SECTION
(UP GRADE)

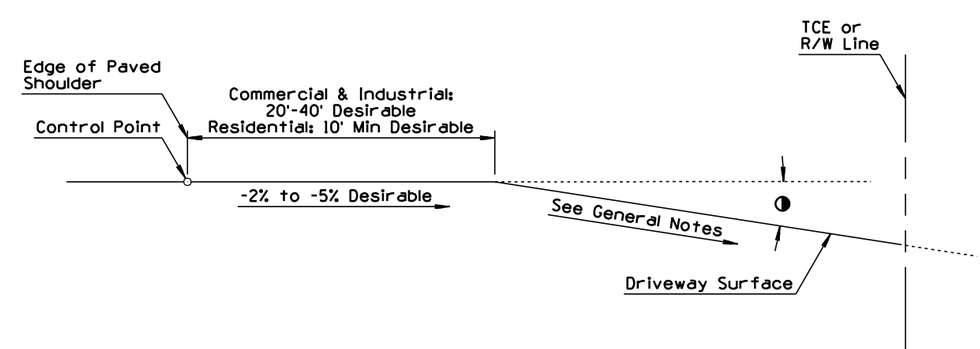

③ RURAL CROSS SECTION
(DOWN GRADE)

DESIGN APPROVED Terry H. Otterness	STATE OF ARIZONA DEPARTMENT OF TRANSPORTATION DIVISION OF HIGHWAYS STANDARD DRAWINGS	REV. 8/98
APPROVED FOR DISTRIBUTION Ronald C. Williams	DRIVEWAY & TURNOUT LAYOUTS	DRAWING NO. C-06.10 Sheet 2 of 2

NO	DESCRIPTION OF REVISIONS	MADE BY	DATE
1	REVISED DETAIL	RLF	7/01
2	ADDED DETAIL	RLF	7/01
3	SHOW SAW AND SEAL AND REVISED BAR	RLF	7/01
4	ADDED NOTE	RLF	7/01

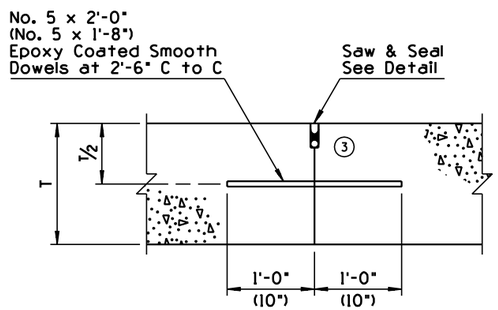

LONGITUDINAL CONSTRUCTION JOINT
LC Joint

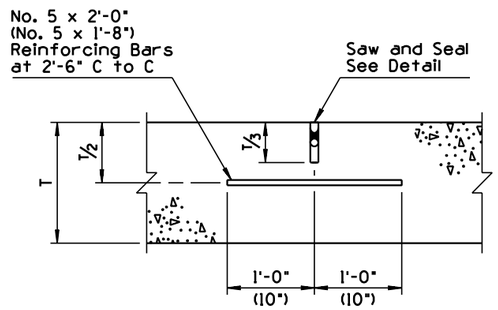

LONGITUDINAL WEAKENED PLANE JOINT
LWP Joint

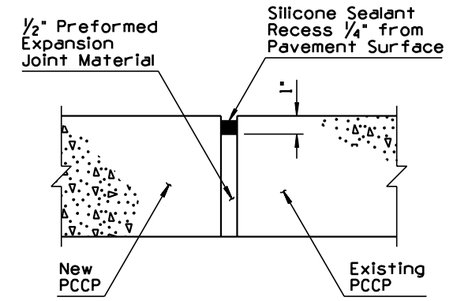

EXPANSION JOINT
H Joint

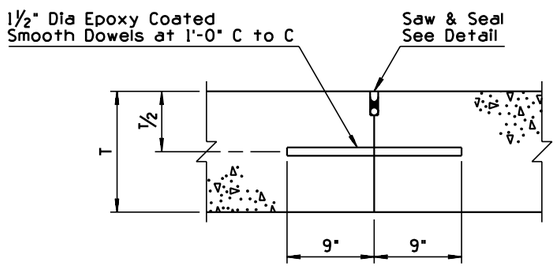

TRANSVERSE CONSTRUCTION JOINT 3
TC Joint
Non-Skewed & Skewed Joints

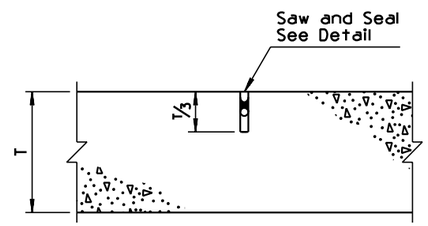

TRANSVERSE WEAKENED PLANE JOINT
TWP Joint
w/o Load Transfer Dowel Assemblies

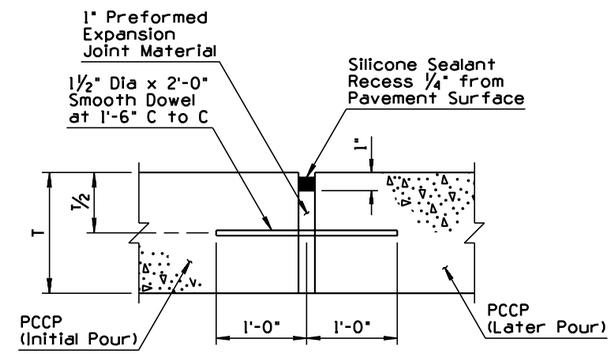

EXPANSION JOINT
E Joint

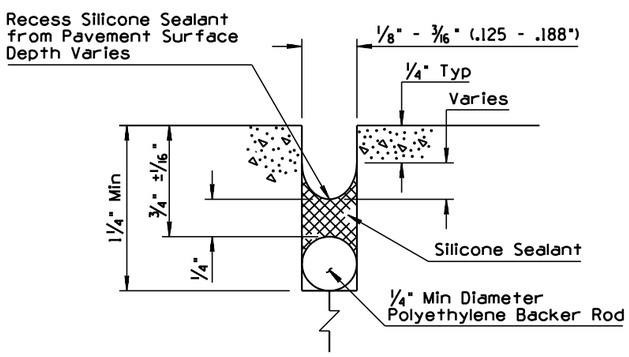

2 CONSTRUCTION JOINT
SAW AND SEAL DETAIL

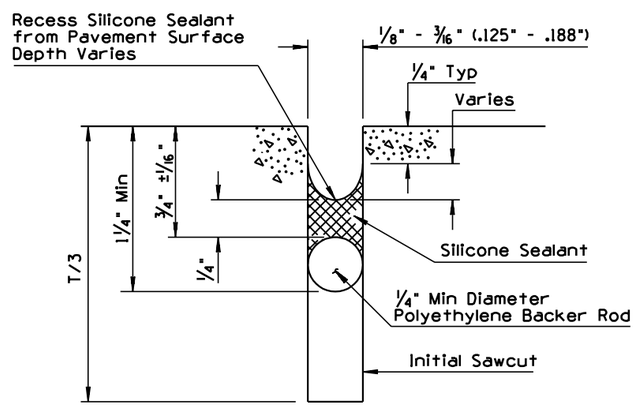

1 WEAKENED PLANE JOINT
SAW AND SEAL DETAIL

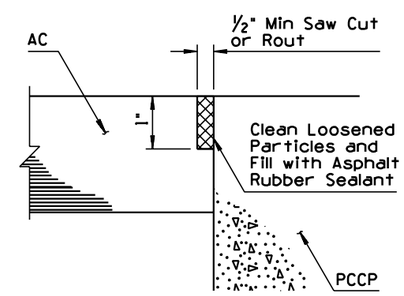

AC/PCCP EDGE SEAL JOINT
S Joint
(Where Specified on Plans) 4

GENERAL NOTES

1. When load transfer dowel assemblies are required, use dimensions shown in ( )'s. See Assembly Placement and Edge Clearance Detail, Std C-07.02.
2. In slip form type pavement construction, LWP joints shall be used. In fixed form construction either LWP or LC joints may be used.

JOINT ABBREVIATIONS

LWP	-	Longitudinal Weakened Plane Joint
TWP	-	Transverse Weakened Plane Joint
LC	-	Longitudinal Construction Joint
TC	-	Transverse Construction Joint
E, H	-	Expansion Joints
S	-	AC/PCC Pavement Edge Seal Joint
T	-	PCCP Thickness

DESIGN APPROVED	STATE OF ARIZONA DEPARTMENT OF TRANSPORTATION DIVISION OF HIGHWAYS STANDARD DRAWINGS	REV. 7/01
APPROVED FOR DISTRIBUTION	PCCP JOINTS	DRAWING NO. C-07.01 Sheet 1 of 2

NO	DESCRIPTION OF REVISIONS	MADE BY	DATE
1	REVISED DETAIL TO SHOW ALL PCCP	PNB	3/94
2	REVISED DETAIL TO SHOW AC & PCCP	PNB	3/94
3	DELETED EXPANSION MATERIAL	PNB	3/94
4	ADDED NOTE ON PAVEMENT SLOPE	PNB	3/94
5	ADDED DETAIL	BAF	8/98
6	ADDED NOTE	BAF	8/98
7	MODIFIED NOTE	BAF	8/98
8			

GENERAL NOTES

(4) 1. Joints are generally shown with pavement sloping toward the joint. Joints are similar with pavement sloping away from the joint.

(6) 2. A "B" joint shall be placed where piers, abutments, barrier transitions, light pole foundations, sign structure foundations, catch basins, slotted drains and all other concrete facilities abut up against the PCCP edge unless otherwise noted in the plans or the standard drawings.

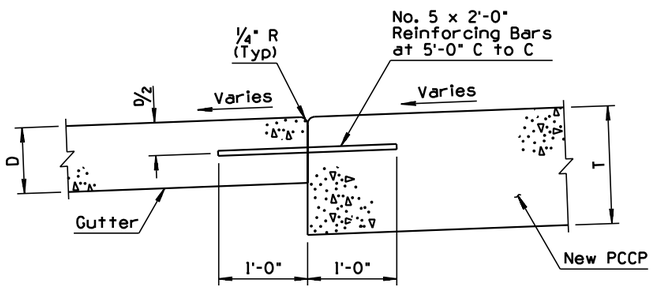

CURB & GUTTER JOINT
G Joint

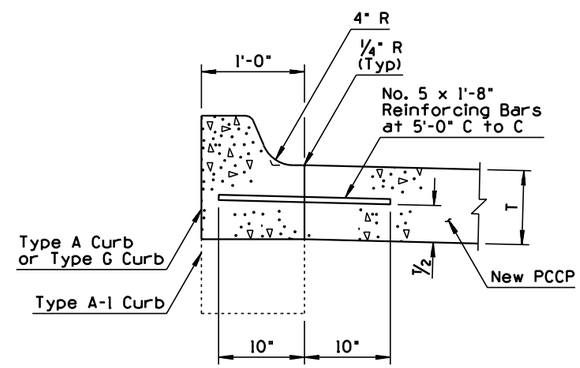

(5) SINGLE CURB JOINT
A Joint

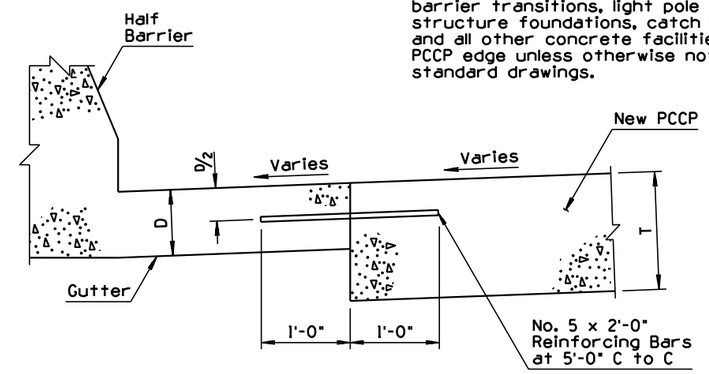

HALF BARRIER JOINT
B Joint

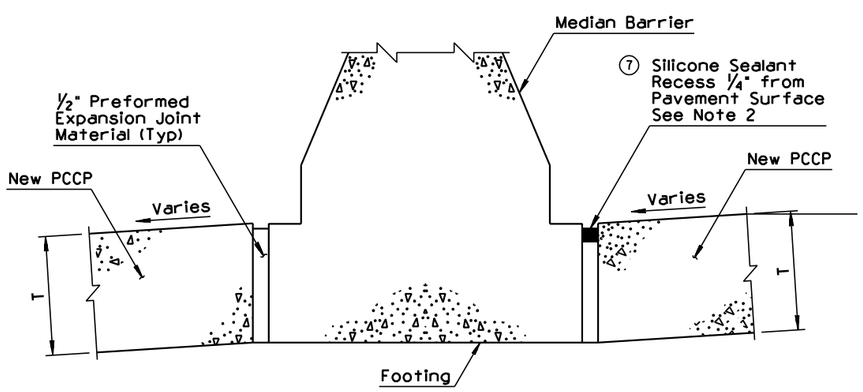

(1) MEDIAN BARRIER JOINT
B Joint
PCCP On Both Sides of Barrier

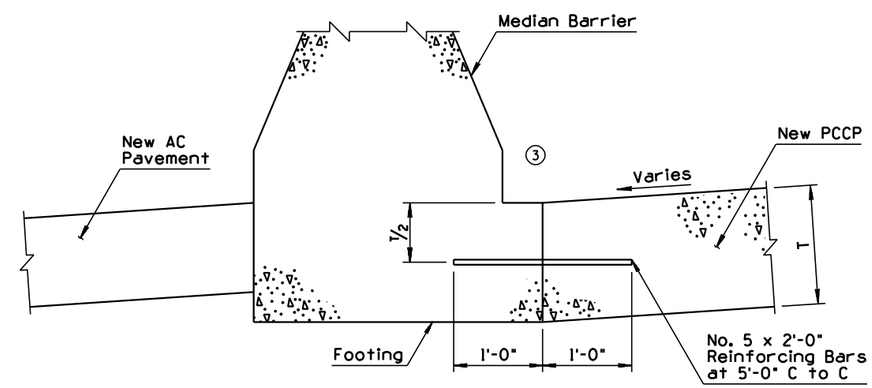

(2) MEDIAN BARRIER JOINT
B Joint
AC Pavement On Back Side of Barrier

JOINT ABBREVIATIONS

G - Gutter Joint
T - PCCP Thickness
D - Gutter Thickness
B - Barrier Joint

DESIGN APPROVED Terry H. Ottenwa	STATE OF ARIZONA DEPARTMENT OF TRANSPORTATION DIVISION OF HIGHWAYS STANDARD DRAWINGS	8/98
APPROVED FOR DISTRIBUTION Ronald C Williams	PCCP JOINTS	DRAWING NO. C-07.01 Sheet 2 of 2

NO	DESCRIPTION OF REVISIONS	MADE BY	DATE
1	CHANGED FROM SKEWED TO NON-SKEWED	TC	1/93
2	MODIFIED DIMENSIONS/CREATED QUANTITY TABLE	TC	1/93
3	MODIFIED DIMENSION	TC	1/93
4			

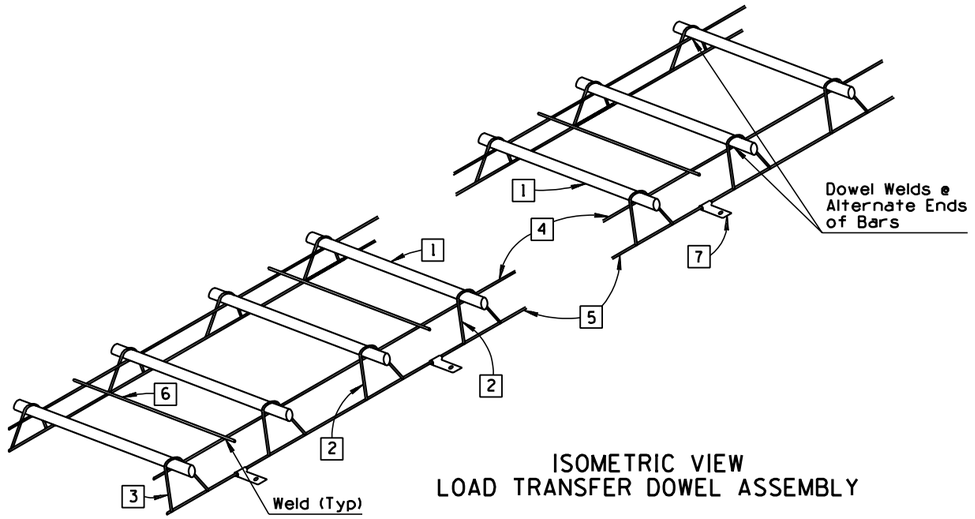

ISOMETRIC VIEW
LOAD TRANSFER DOWEL ASSEMBLY

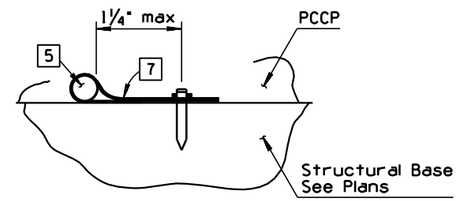

ANCHOR STRAP DETAIL

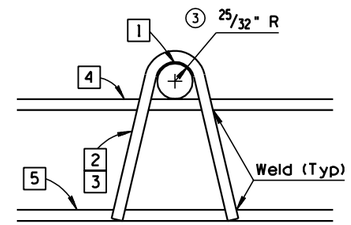

END AND INTERMEDIATE LEG DETAIL

GENERAL NOTES

1. Load transfer dowel assemblies shall be used with non-skewed PCCP joints.
2. Load transfer dowel assemblies are to be placed at each transverse weakened plane joint on the traveled lanes as shown on the plans.
3. See Std C-07.01 thru C-07.05 for additional information.
4. See plans or Std C-07.03 thru C-07.05 for transverse joint spacing.
5. See plans for pavement thickness less than 12" or greater than 14".

Load transfer dowel assembly shall be assembled from the following materials. (See Quantity Table)

③ 1 Dowel bars - 1½" dia x 1'-6" plain round bars w/coating. See Special Provisions.

2 Intermediate legs - 2 Ga or W-5.5 wire.

3 End legs - 2 Ga or W-5.5 wire.

4 Upper space bar - 2 Ga or W-5.5 wire x ◑. (See Dimension Tabel)

5 Lower space bar - 2 Ga or W-5.5 wire x ◑. (See Dimension Table)

6 Tie bars - W-1.5 wire x 16".

7 Anchor straps - 1"x3" steel strap, 0.079 thick. Place with 1-½" min steel nail for LCB, 4" min steel nail for ACB or AB, 0.145 dia ASTM A227 Class 1 w/¼" head or washer to be power driven.

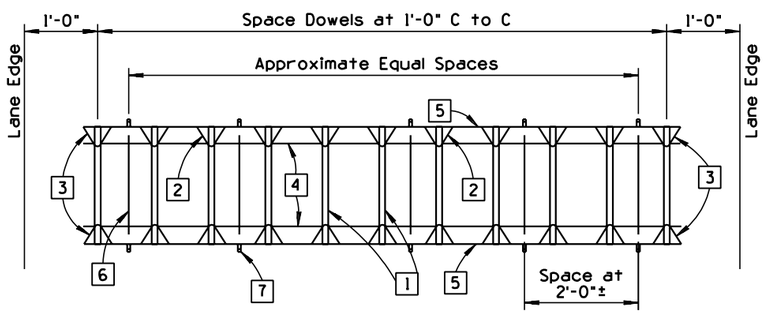

PLAN VIEW
① LOAD TRANSFER DOWEL ASSEMBLY

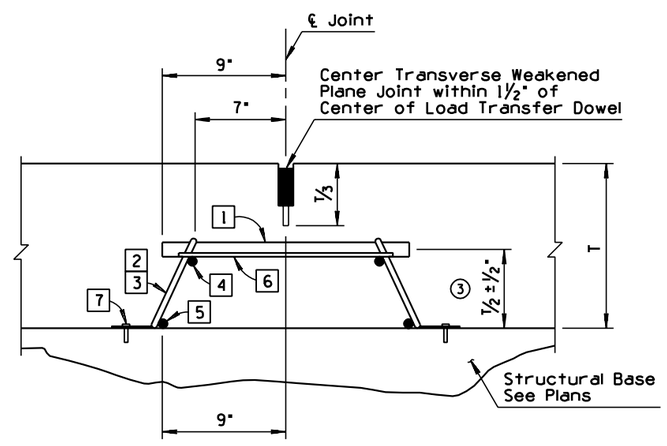

TRANSVERSE WEAKENED PLANE JOINT WITH
LOAD TRANSFER DOWEL ASSEMBLY

② QUANTITY TABLE

Item No.	Lane Width		
	12'	14'	16'
1	11	13	15
2	18	22	26
3	4	4	4
4	2	2	2
5	2	2	2
6	5	6	7
7	10	12	14

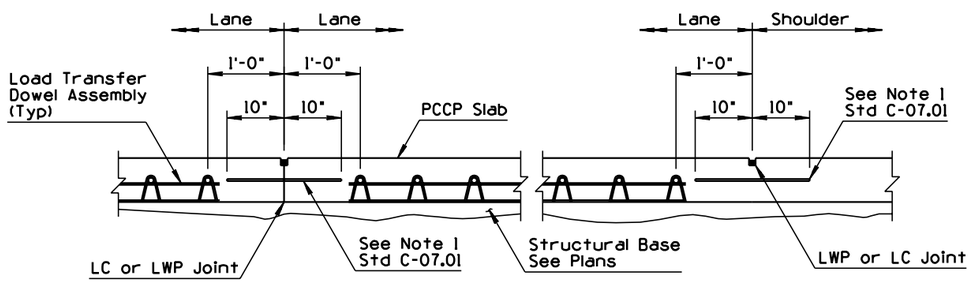

ASSEMBLY PLACEMENT AND EDGE CLEARANCE DETAIL

DIMENSION TABLE

	Lane Width		
	12'	14'	16'
◑	10'-4"	12'-4"	14'-4"

DESIGN APPROVED
Terry H. Otterness
APPROVED FOR DISTRIBUTION
Ronald C. Williams

STATE OF ARIZONA
DEPARTMENT OF TRANSPORTATION
DIVISION OF HIGHWAYS
STANDARD DRAWINGS

REV. 1/93

LOAD TRANSFER DOWEL ASSEMBLY

DRAWING NO. C-07.02

NO	DESCRIPTION OF REVISIONS	MADE BY	DATE
1	MODIFIED NOTE	TC	1/93
2	ADDED NOTE	TC	1/93
3			
4			

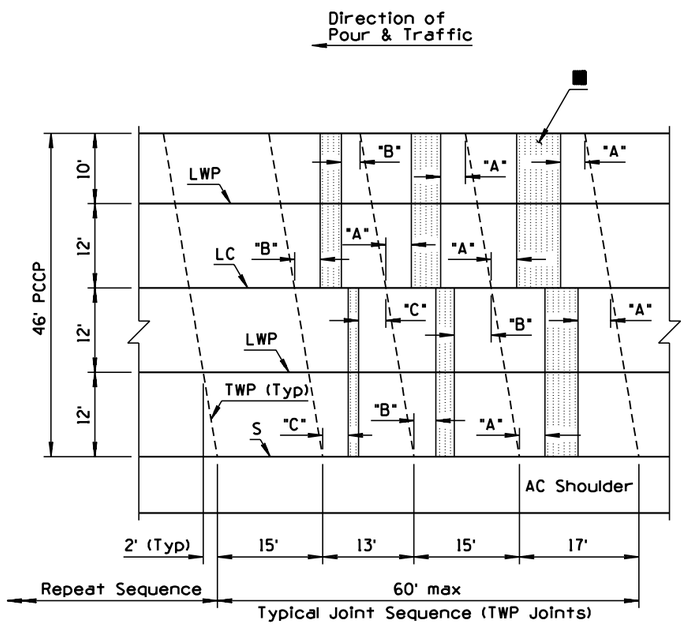

PLAN
46' PCCP

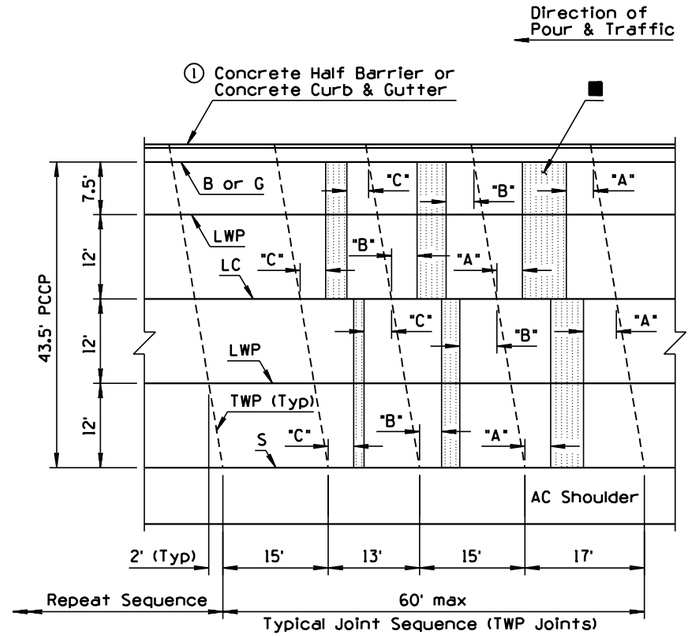

PLAN
43.5' PCCP

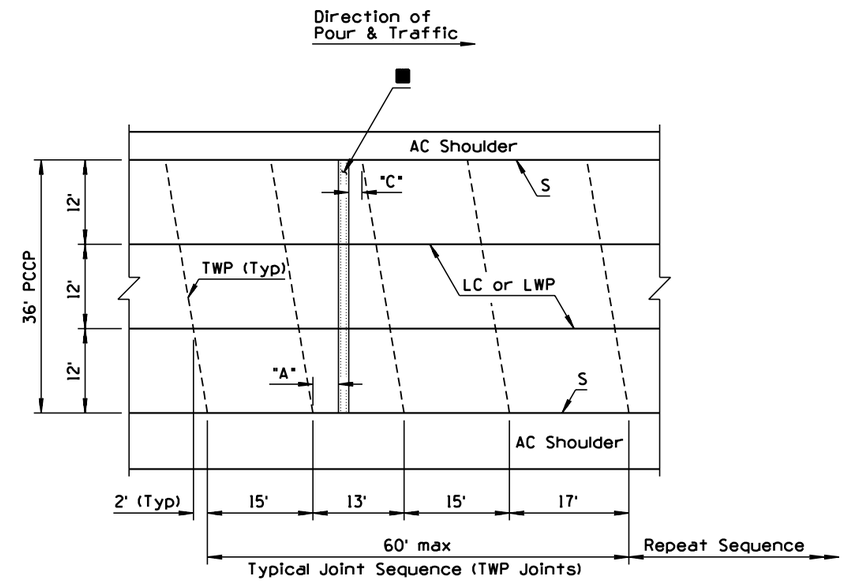

PLAN
36' PCCP

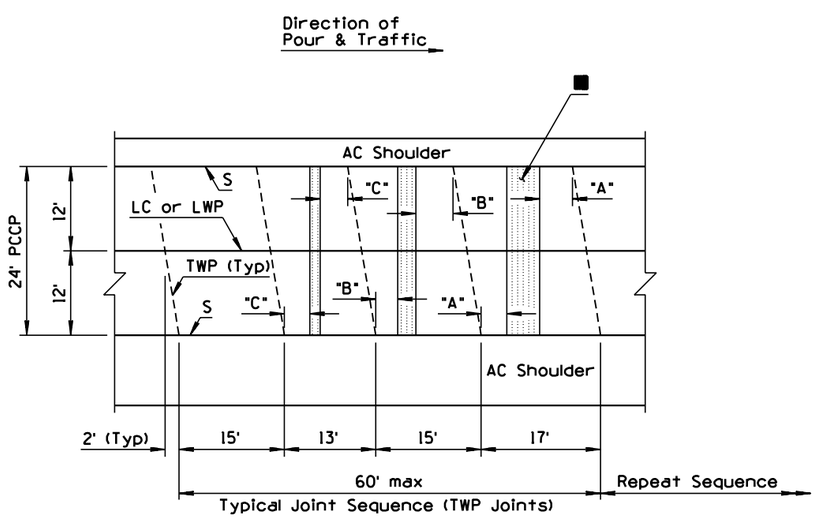

PLAN
24' PCCP

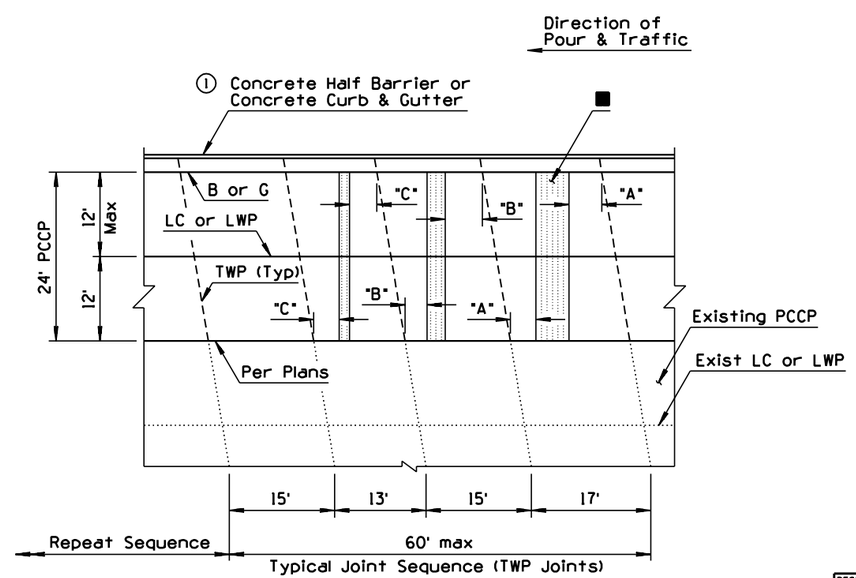

PLAN
24' PCCP
(Widening)

GENERAL NOTES

② 1. Skewed PCCP joints shall be used when load transfer dowel assemblies are not required.

2. "A" shall equal 4' minimum (typical).
"B" shall equal 3' minimum (typical)
"C" shall equal 2' minimum (typical)

3. See Std C-07.01 for PCCP joints and additional notes.

4. All transverse joints shall be in line with joints in adjacent slabs.

② 5. See Std C-05.10 for curb and gutter joint requirements.

6. At intersection of side roads or streets, joints shall be placed to give the intersection a symmetrical appearance while conforming to the cross section of the intersecting road or street.

② 7. The reinforcing bars in the LWP & LC joints shall be placed no greater than 1'-3" from the TC joint.

■ Transverse Construction Joint (TC) allowable limits (Typ).

DESIGN APPROVED Terry H. Otterness	STATE OF ARIZONA DEPARTMENT OF TRANSPORTATION DIVISION OF HIGHWAYS STANDARD DRAWINGS	REV. 1/93
APPROVED FOR DISTRIBUTION Ronald C. Williams	MAINLINE PCCP JOINT LOCATIONS SKEWED JOINTS	DRAWING NO. C-07.03 Sheet 1 of 8

NO	DESCRIPTION OF REVISIONS	MADE BY	DATE
1			
2			
3			
4			

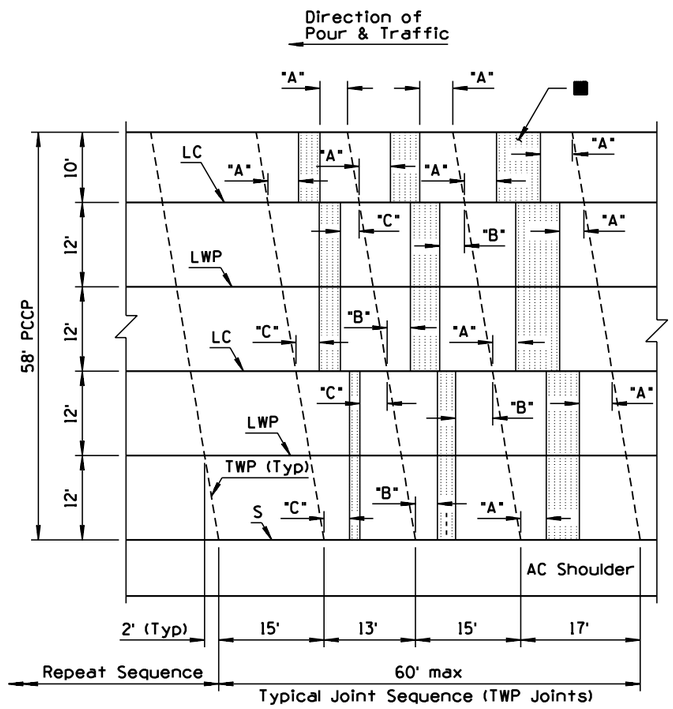

PLAN
58' PCCP

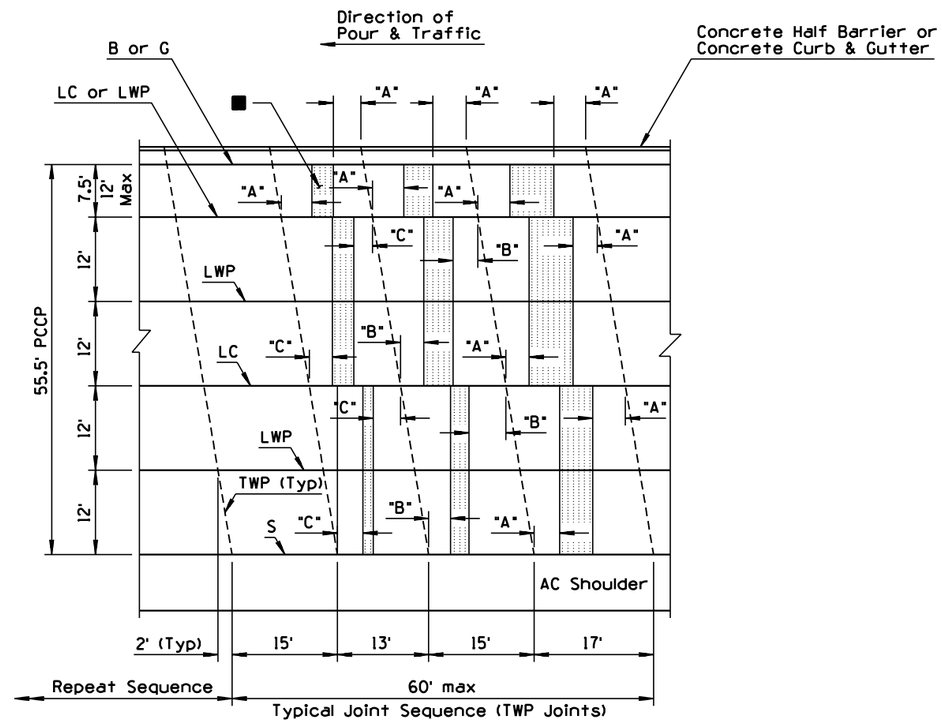

PLAN
55.5' PCCP

GENERAL NOTES

1. Skewed PCCP joints shall be used when load transfer dowel assemblies are not required.
2. "A" shall equal 4' minimum (typical).
   "B" shall equal 3' minimum (typical)
   "C" shall equal 2' minimum (typical)
3. See Std C-07.01 for PCCP joints and additional notes.
4. All transverse joints shall be in line with joints in adjacent slabs.
5. See Std C-05.10 for curb and gutter joint requirements.
6. At intersection of side roads or streets, joints shall be placed to give the intersection a symmetrical appearance while conforming to the cross section of the intersecting road or street.
7. The reinforcing bars in the LWP & LC joints shall be placed no greater than 1'-3" from the TC joint.

■ Transverse Construction Joint (TC) allowable limits (Typ).

DESIGN APPROVED Terry H. Otterness	STATE OF ARIZONA DEPARTMENT OF TRANSPORTATION DIVISION OF HIGHWAYS STANDARD DRAWINGS	1/93
APPROVED FOR DISTRIBUTION Ronald C. Williams	MAINLINE PCCP JOINT LOCATIONS SKEWED JOINTS	DRAWING NO. C-07.03 Sheet 2 of 8

NO	DESCRIPTION OF REVISIONS	MADE BY	DATE
1			
2			
3			
4			

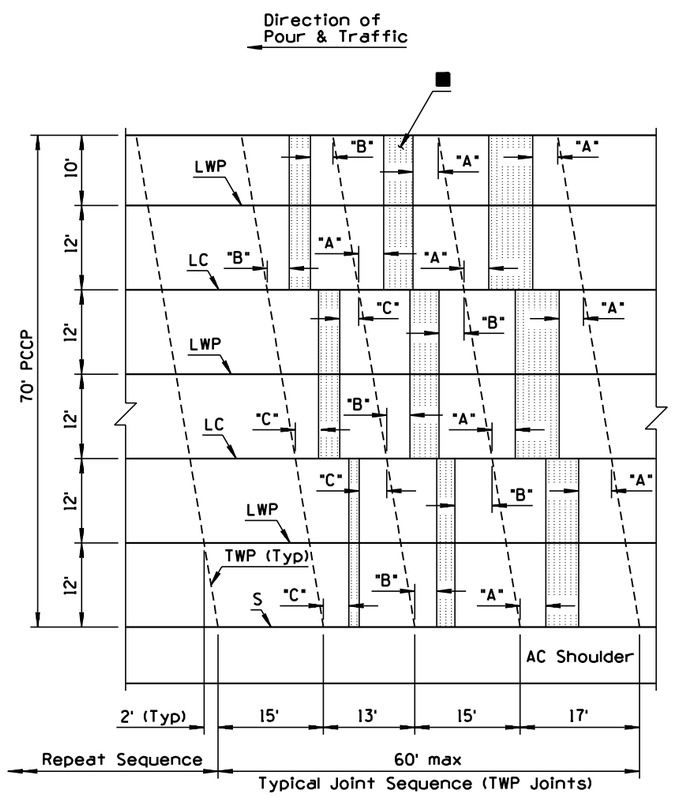

PLAN
70' PCCP

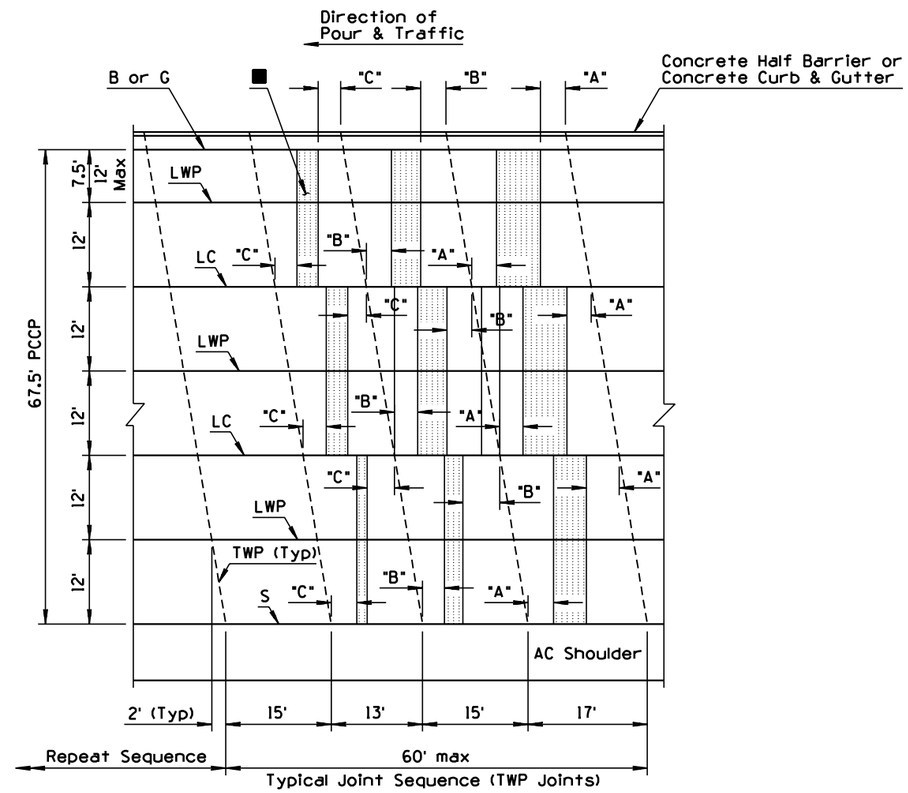

PLAN
67.5' PCCP

GENERAL NOTES

1. Skewed PCCP joints shall be used when load transfer dowel assemblies are not required.
2. "A" shall equal 4' minimum (typical).
   "B" shall equal 3' minimum (typical)
   "C" shall equal 2' minimum (typical)
3. See Std C-07.01 for PCCP joints and additional notes.
4. All transverse joints shall be in line with joints in adjacent slabs.
5. See Std C-05.10 for curb and gutter joint requirements.
6. At intersection of side roads or streets, joints shall be placed to give the intersection a symmetrical appearance while conforming to the cross section of the intersecting road or street.
7. The reinforcing bars in the LWP & LC joints shall be placed no greater than 1'-3" from the TC joint.

■ Transverse Construction Joint (TC) allowable limits (Typ).

DESIGN APPROVED Terry H. Otterness	STATE OF ARIZONA DEPARTMENT OF TRANSPORTATION DIVISION OF HIGHWAYS STANDARD DRAWINGS	1/93
APPROVED FOR DISTRIBUTION Ronald C. Williams	MAINLINE PCCP JOINT LOCATIONS SKEWED JOINTS	DRAWING NO. C-07.03 Sheet 3 of 8

NO	DESCRIPTION OF REVISIONS	MADE BY	DATE
1			
2			
3			
4			

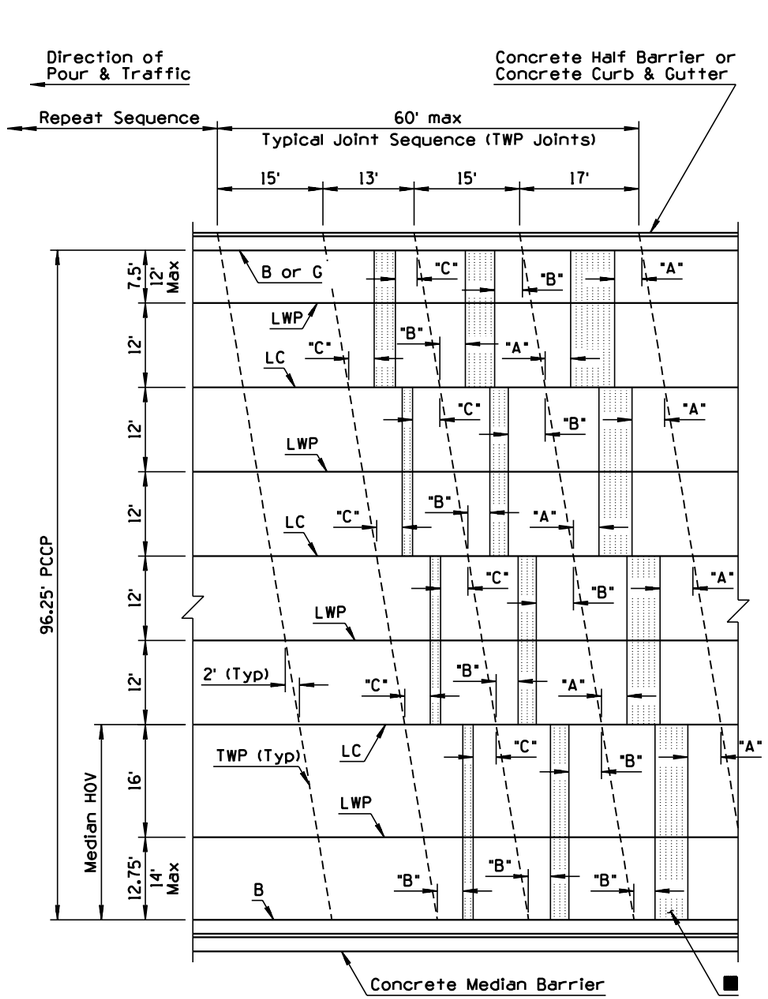

PLAN
96.25' PCCP

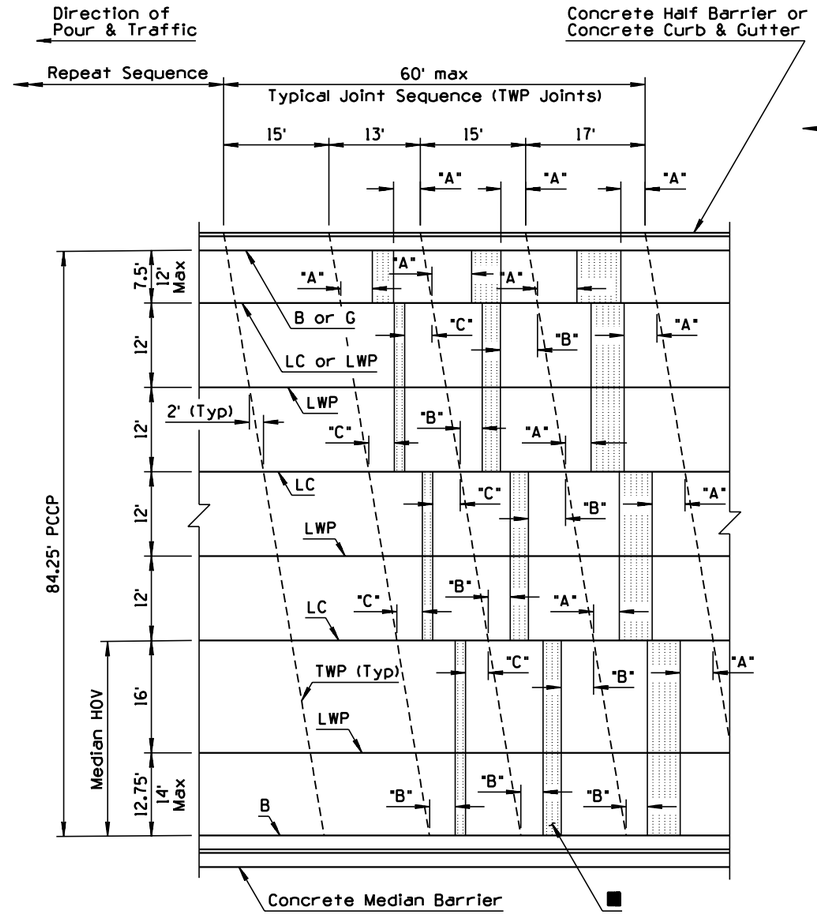

PLAN
84.25' PCCP

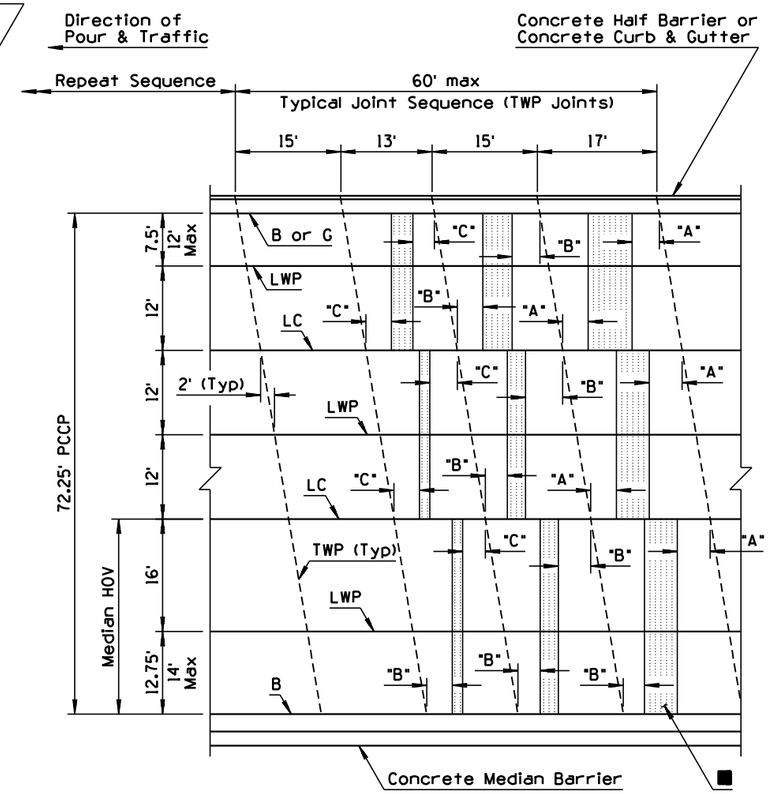

PLAN
72.25' PCCP

GENERAL NOTES

1. Skewed PCCP joints shall be used when load transfer dowel assemblies are not required.
2. "A" shall equal 4' minimum (typical).
   "B" shall equal 3' minimum (typical)
   "C" shall equal 2' minimum (typical)
3. See Std C-07.01 for PCCP joints and additional notes.
4. All transverse joints shall be in line with joints in adjacent slabs.
5. See Std C-05.10 for curb and gutter joint requirements.
6. At intersection of side roads or streets, joints shall be placed to give the intersection a symmetrical appearance while conforming to the cross section of the intersecting road or street.
7. The reinforcing bars in the LWP & LC joints shall be placed no greater than 1'-3" from the TC joint.

■ Transverse Construction Joint (TC) allowable limits (Typ).

DESIGN APPROVED Terry H. Ottemas	STATE OF ARIZONA DEPARTMENT OF TRANSPORTATION DIVISION OF HIGHWAYS STANDARD DRAWINGS	1/93
APPROVED FOR DISTRIBUTION Ronald C. Williams	MAINLINE PCCP JOINT LOCATIONS SKEWED JOINTS	DRAWING NO. C-07.03 Sheet 4 of 8

NO	DESCRIPTION OF REVISIONS	MADE BY	DATE
1			
2			
3			
4			

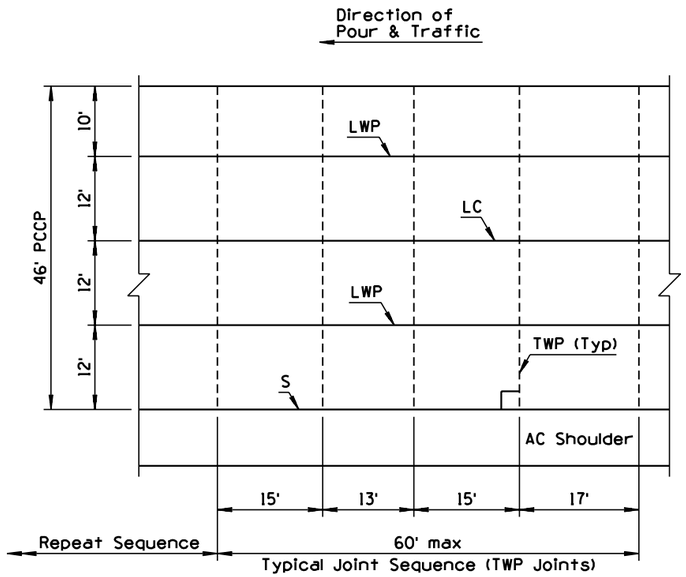

PLAN
46' PCCP

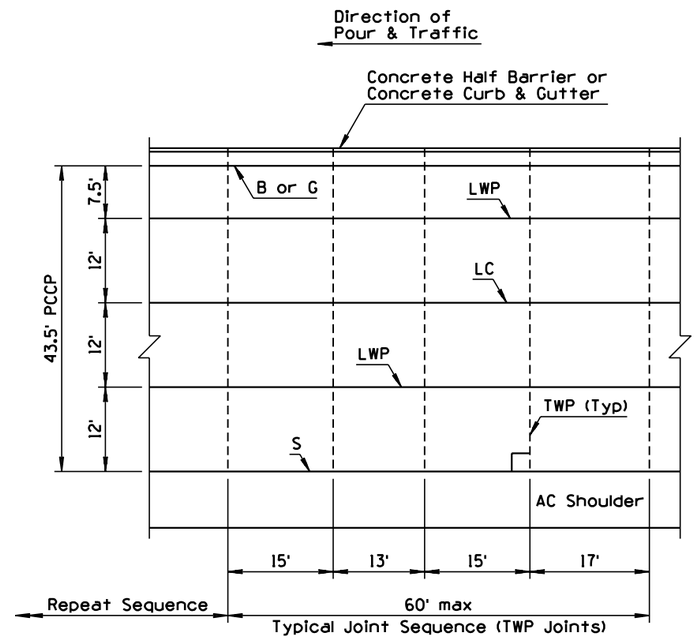

PLAN
43.5' PCCP

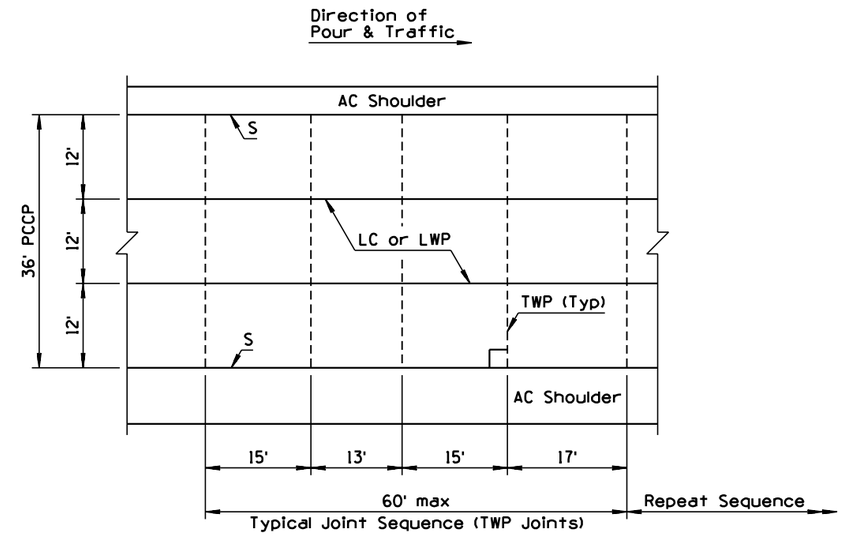

PLAN
36' PCCP

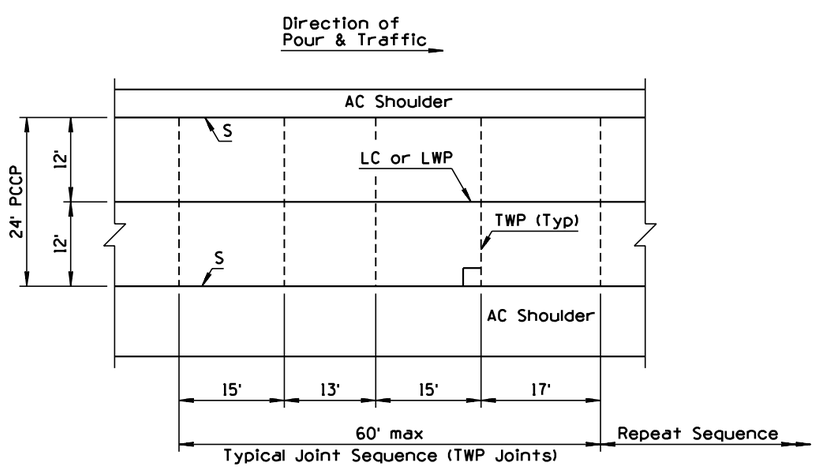

PLAN
24' PCCP

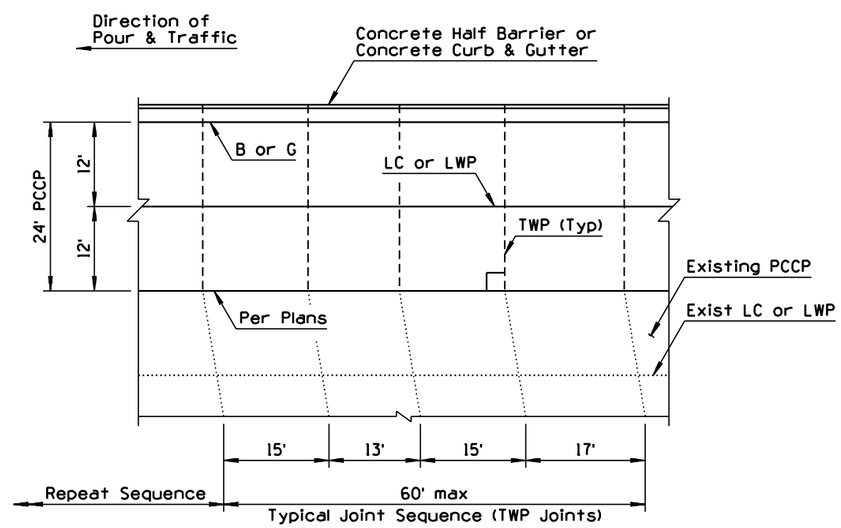

PLAN
24' PCCP
(Widening)

GENERAL NOTES

1. Non-skewed PCCP joints shall be used with load transfer dowel assemblies.
2. See Std C-07.01 for PCCP joints and additional notes.
3. All transverse joints shall be in line with joints in adjacent slabs and are perpendicular (90°) to the longitudinal joints.
4. At intersection of side roads or streets, joints shall be placed to give the intersection a symmetrical appearance while conforming to the cross section of the intersecting road or street.
5. See Std C-05.10 for curb and gutter joint requirements.
6. The reinforcing bars in the LWP & LC joints shall be placed no greater than 1'-3" from the TC joint.
7. Transverse weakened plane joint shall be constructed at least 6'-0" from a transverse construction joint.

DESIGN APPROVED Terry H. Otterness	STATE OF ARIZONA DEPARTMENT OF TRANSPORTATION DIVISION OF HIGHWAYS STANDARD DRAWINGS	1/93
APPROVED FOR DISTRIBUTION Ronald C. Williams	MAINLINE PCCP JOINT LOCATIONS NON-SKEWED JOINTS	DRAWING NO. C-07.03 Sheet 5 of 8

NO	DESCRIPTION OF REVISIONS	MADE BY	DATE
1			
2			
3			
4			

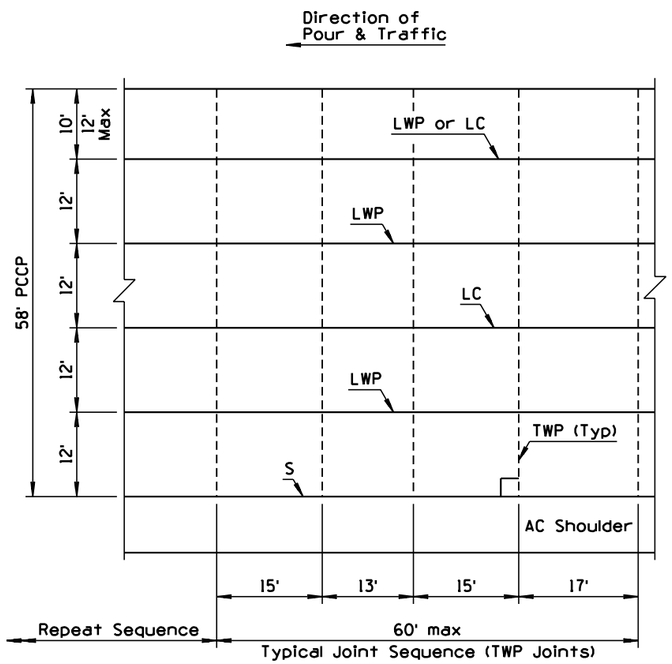

PLAN
58' PCCP

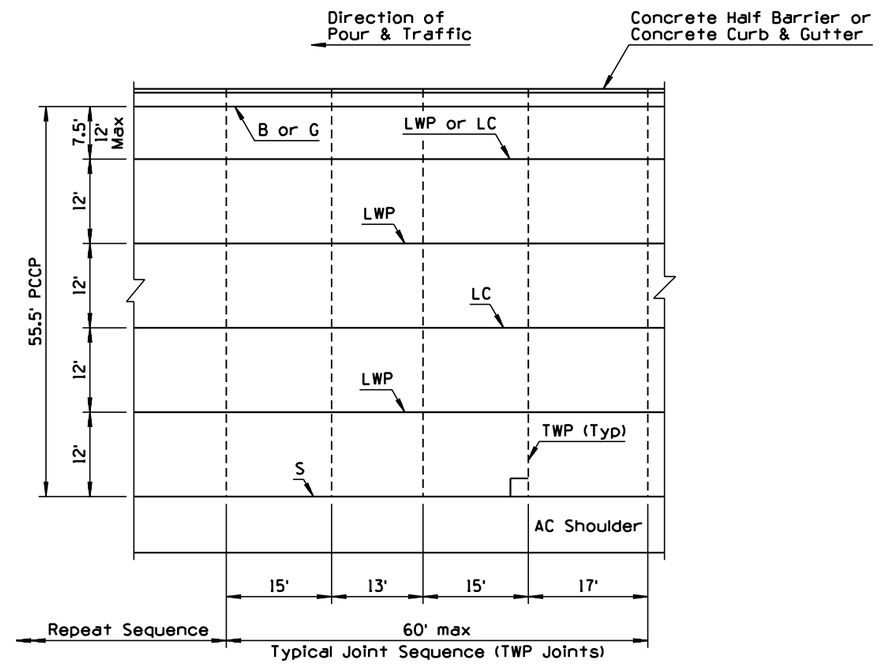

PLAN
55.5' PCCP

GENERAL NOTES

1. Non-skewed PCCP joints shall be used with load transfer dowel assemblies.
2. See Std C-07.01 for PCCP joints and additional notes.
3. All transverse joints shall be in line with joints in adjacent slabs and are perpendicular (90°) to the longitudinal joints.
4. At intersection of side roads or streets, joints shall be placed to give the intersection a symmetrical appearance while conforming to the cross section of the intersecting road or street.
5. See Std C-05.10 for curb and gutter joint requirements.
6. The reinforcing bars in the LWP & LC joints shall be placed no greater than 1'-3" from the TC joint.
7. Transverse weakened plane joint shall be constructed at least 6'-0" from a transverse construction joint.

DESIGN APPROVED Terry H. Otterness	STATE OF ARIZONA DEPARTMENT OF TRANSPORTATION DIVISION OF HIGHWAYS STANDARD DRAWINGS	1/93
APPROVED FOR DISTRIBUTION Ronald C. Williams	MAINLINE PCCP JOINT LOCATIONS NON-SKEWED JOINTS	DRAWING NO. C-07.03 Sheet 6 of 8

NO	DESCRIPTION OF REVISIONS	MADE BY	DATE
1			
2			
3			
4			

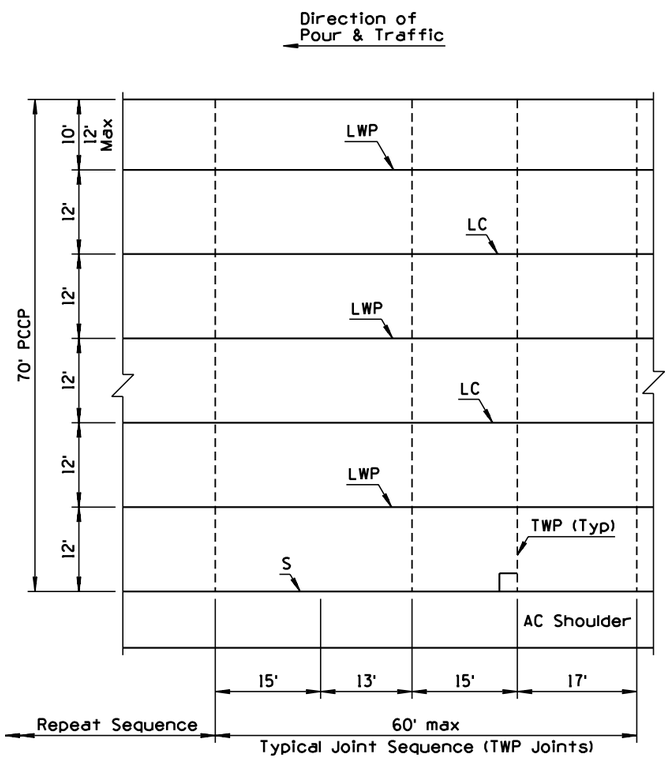

PLAN
70' PCCP

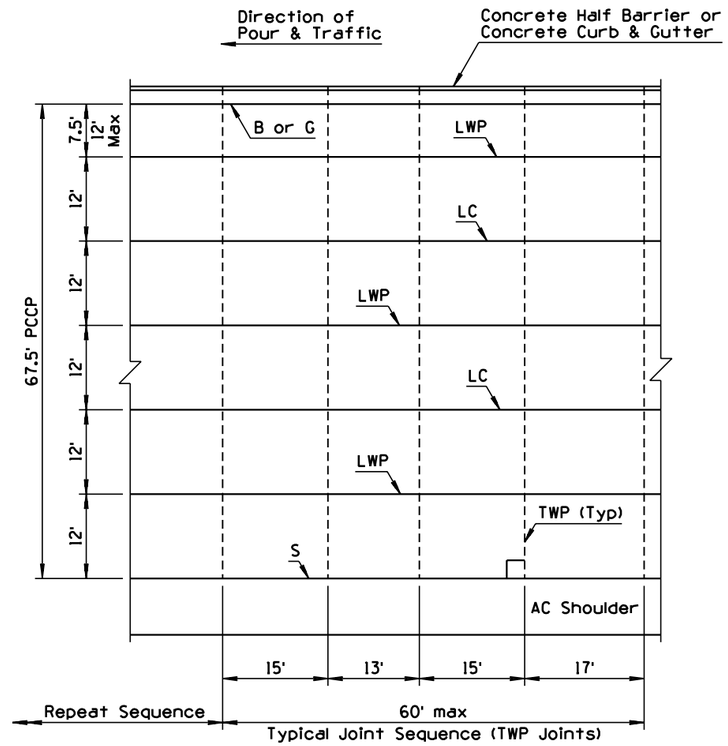

PLAN
67.5' PCCP

GENERAL NOTES

1. Non-skewed PCCP joints shall be used with load transfer dowel assemblies.
2. See Std C-07.01 for PCCP joints and additional notes.
3. All transverse joints shall be in line with joints in adjacent slabs and are perpendicular (90°) to the longitudinal joints.
4. At intersection of side roads or streets, joints shall be placed to give the intersection a symmetrical appearance while conforming to the cross section of the intersecting road or street.
5. See Std C-05.10 for curb and gutter joint requirements.
6. The reinforcing bars in the LWP & LC joints shall be placed no greater than 1'-3" from the TC joint.
7. Transverse weakened plane joint shall be constructed at least 6'-0" from a transverse construction joint.

DESIGN APPROVED Terry H. Ottemus	STATE OF ARIZONA DEPARTMENT OF TRANSPORTATION DIVISION OF HIGHWAYS STANDARD DRAWINGS	1/93
APPROVED FOR DISTRIBUTION Ronald C. Williams	MAINLINE PCCP JOINT LOCATIONS NON-SKEWED JOINTS	DRAWING NO. C-07.03 Sheet 7 of 8

NO	DESCRIPTION OF REVISIONS	MADE BY	DATE
1			
2			
3			
4			

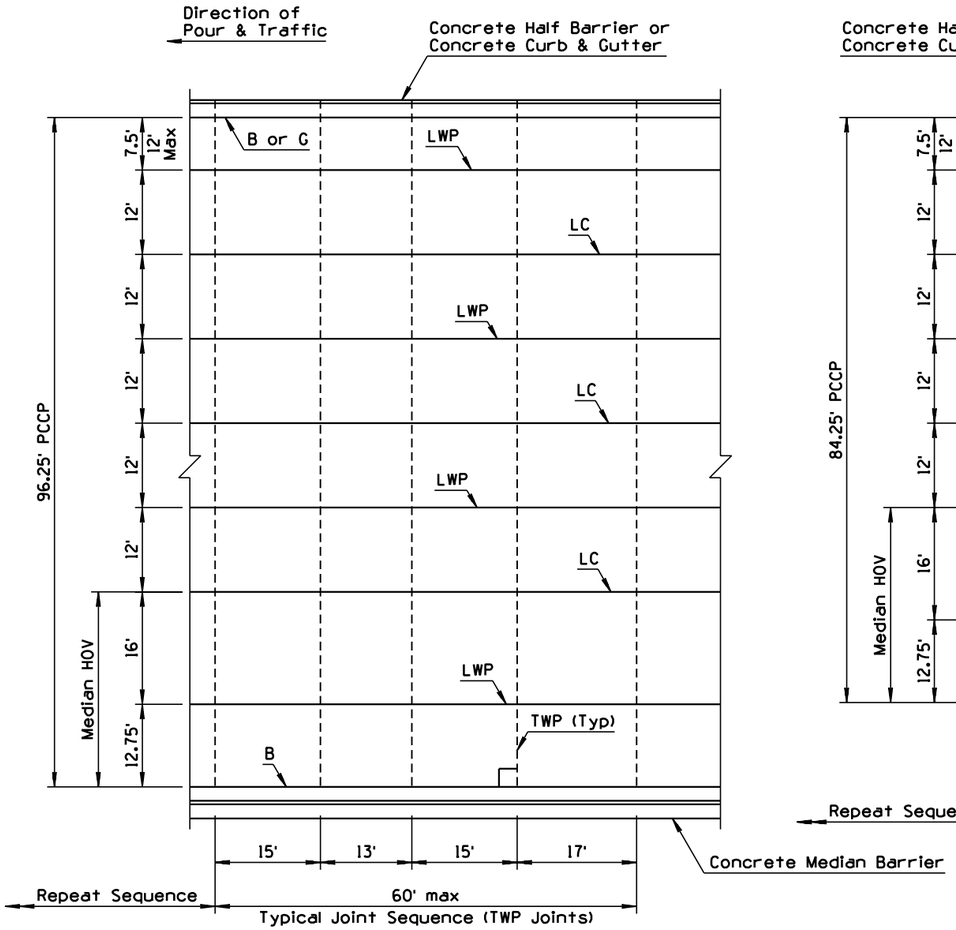

PLAN
96.25' PCCP

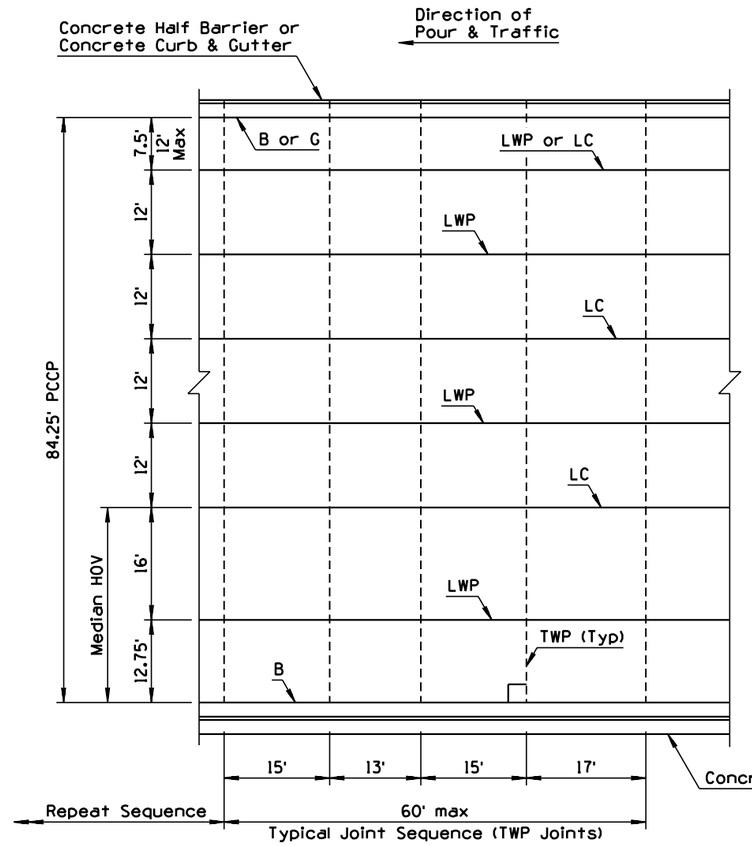

PLAN
84.25' PCCP

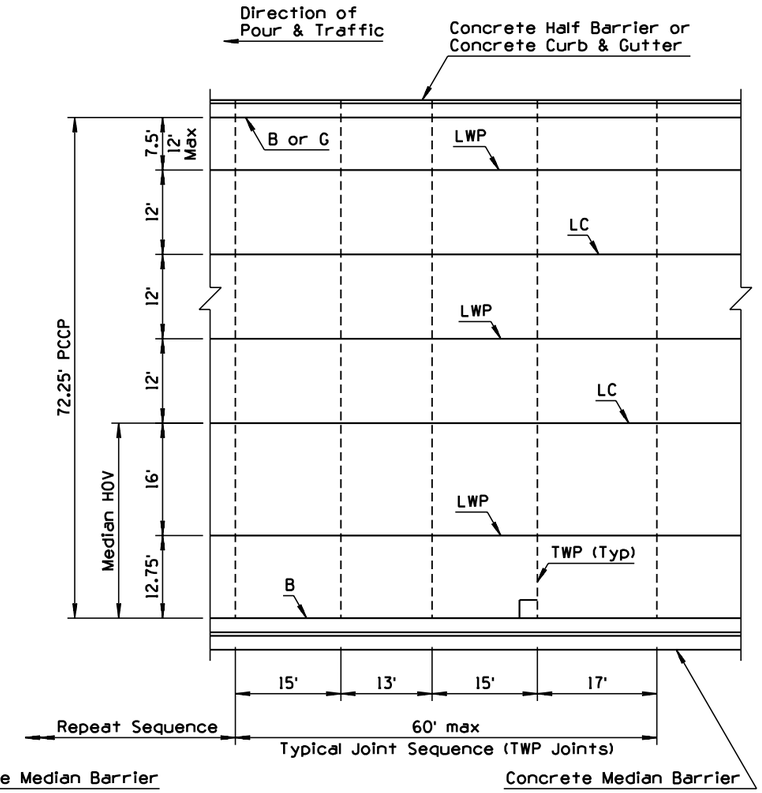

PLAN
72.25' PCCP

GENERAL NOTES

1. Non-skewed PCCP joints shall be used with load transfer dowel assemblies.
2. See Std C-07.01 for PCCP joints and additional notes.
3. All transverse joints shall be in line with joints in adjacent slabs and are perpendicular (90°) to the longitudinal joints.
4. At intersection of side roads or streets, joints shall be placed to give the intersection a symmetrical appearance while conforming to the cross section of the intersecting road or street.
5. See Std C-05.10 for curb and gutter joint requirements.
6. The reinforcing bars in the LWP & LC joints shall be placed no greater than 1'-3" from the TC joint.
7. Transverse weakened plane joint shall be constructed at least 6'-0" from a transverse construction joint.

DESIGN APPROVED Terry H. Otterness	STATE OF ARIZONA DEPARTMENT OF TRANSPORTATION DIVISION OF HIGHWAYS STANDARD DRAWINGS	1/93
APPROVED FOR DISTRIBUTION Ronald C. Williams	MAINLINE PCCP JOINT LOCATIONS NON-SKEWED JOINTS	DRAWING NO. C-07.03 Sheet 8 of 8

NO	DESCRIPTION OF REVISIONS	MADE BY	DATE
1	REVISED DISTANCE ACROSS BACK OF GORE	PNB	10/95
2	MODIFIED NOTE	PNB	10/95
3	DELETED REFERENCE TO RAMP CONTROL POINT	PNB	10/95
4	MODIFIED NOTE	BAF	7/97

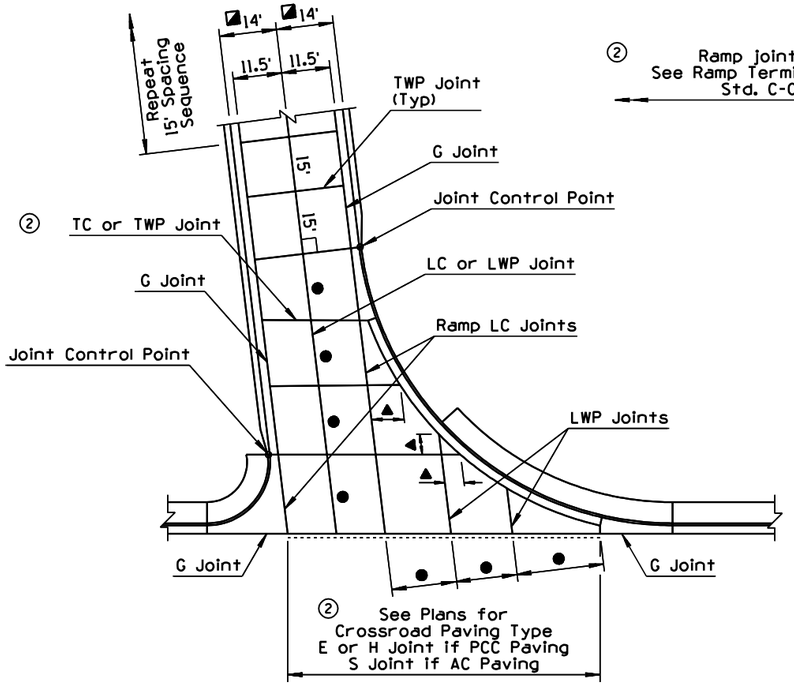

RAMP TERMINAL AT CROSSROAD

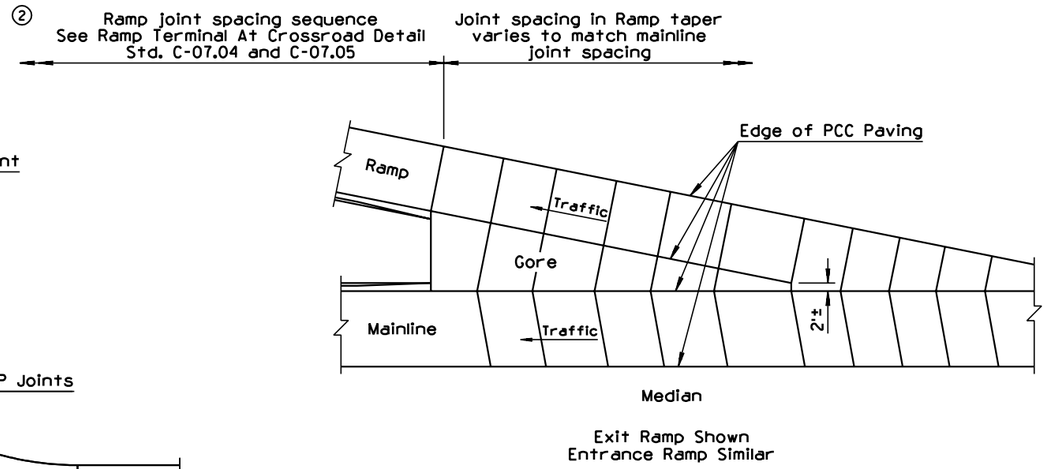

TYPICAL TRANSVERSE WEAKENED PLANE JOINT LAYOUT AT GORE AREAS

GENERAL NOTES

1. Dimensions with a tolerance may be adjusted to align to the nearest transverse weakened plane construction joint as directed.
2. See Std C-07.01 for joint information.
3. See plans for ramp dimensions.
4. See Std C-07.05 for Sections A-A and B-B.
5. The ratio of transverse to longitudinal joint spacing shall be greater than ⅔ but not more than 1½.
6. Ramp transverse joints shall be perpendicular (90°) to the ramp longitudinal joints, except as shown at the ramp terminal.

▲ 6' Minimum

● Varies - 18' Maximum ④
11' Minimum

◨ Transition, See Std C-05.12

◩ Without Curb & Gutter

① ◑ 12' Face of Curb to Face of Curb

[1] Mainline Structure Section, See Plans

[2] Ramp Structure Section, See Plans

[3] Gore Structure Section, See Std C-08.20

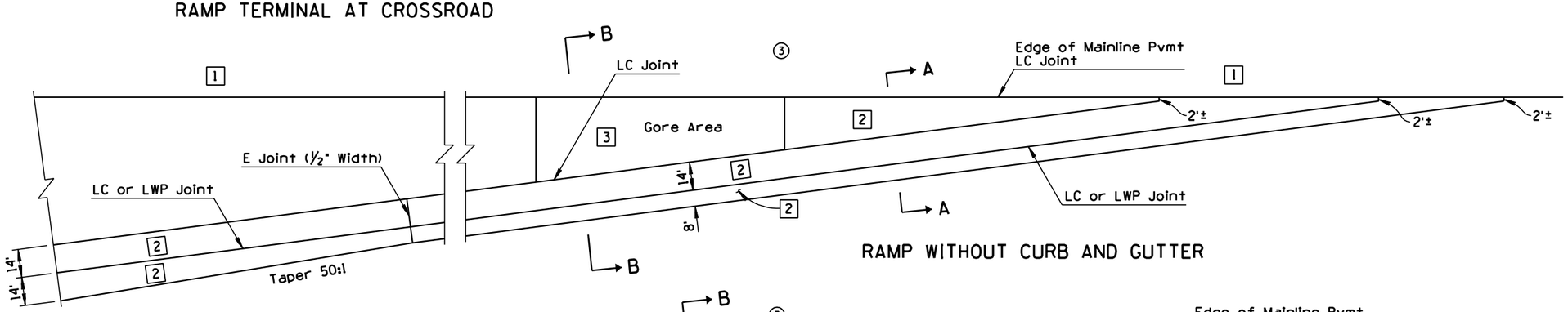

RAMP WITHOUT CURB AND GUTTER

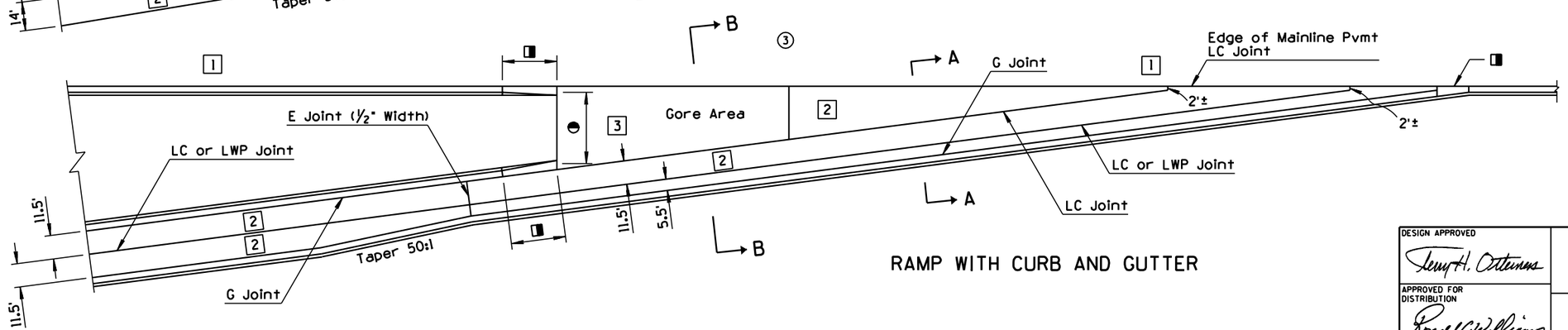

RAMP WITH CURB AND GUTTER

DESIGN APPROVED Terry H. Otterness	STATE OF ARIZONA DEPARTMENT OF TRANSPORTATION DIVISION OF HIGHWAYS STANDARD DRAWINGS	REV. 8/98
APPROVED FOR DISTRIBUTION Ronald C. Williams	ENTRANCE RAMP PCCP JOINTS	DRAWING NO. C-07.04

NO	DESCRIPTION OF REVISIONS	MADE BY	DATE
1	DELETED REFERENCE TO RAMP CONTROL POINT	PNB	10/95
2	MODIFIED NOTE	PNB	10/95
3	MODIFIED NOTE	BAF	7/97
4			

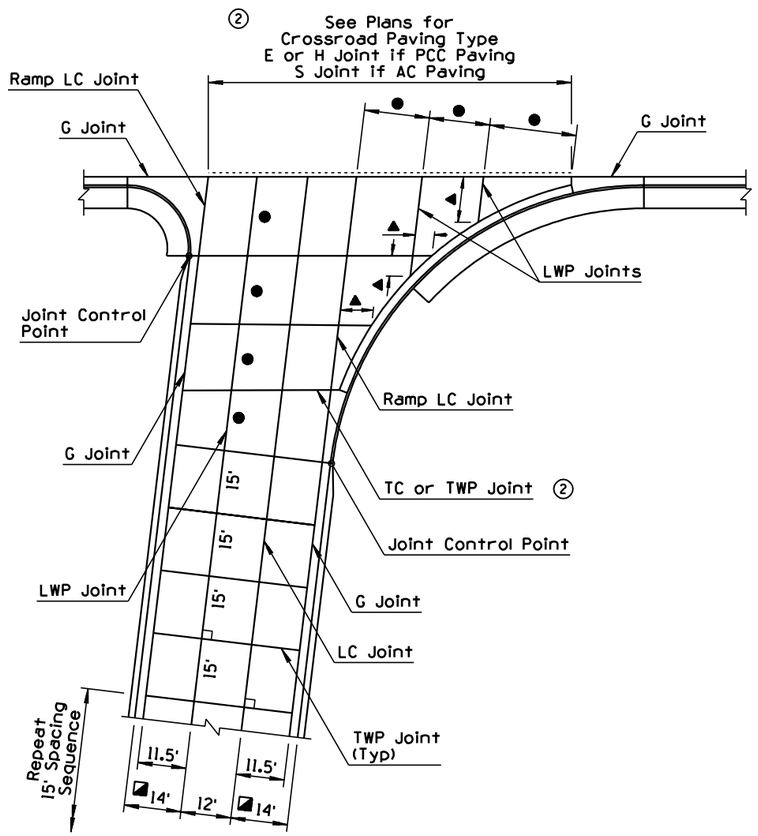

RAMP TERMINAL AT CROSSROAD

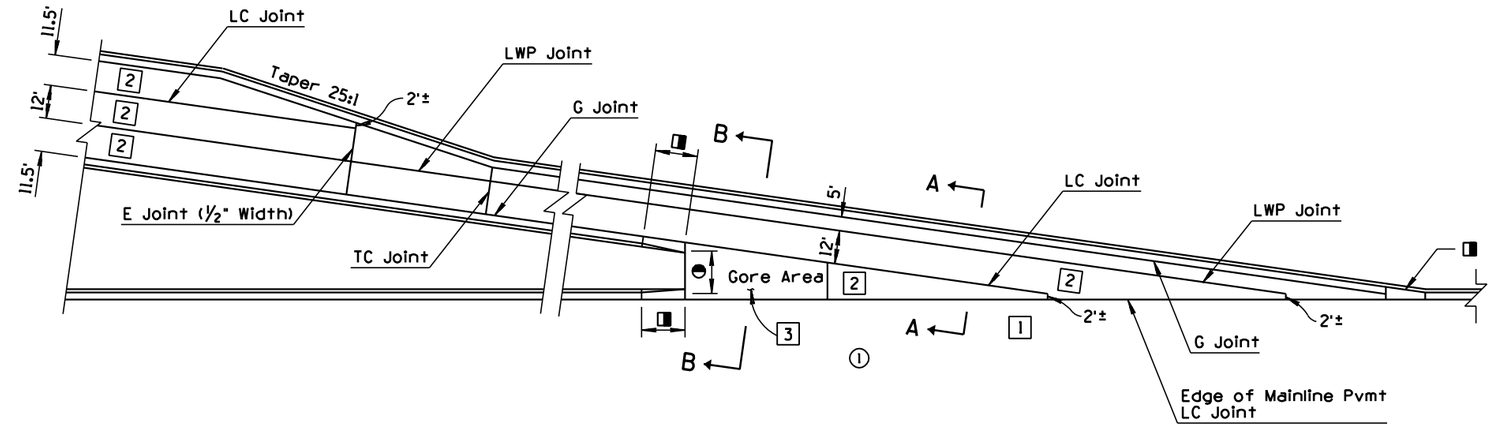

RAMP WITH CURB AND GUTTER

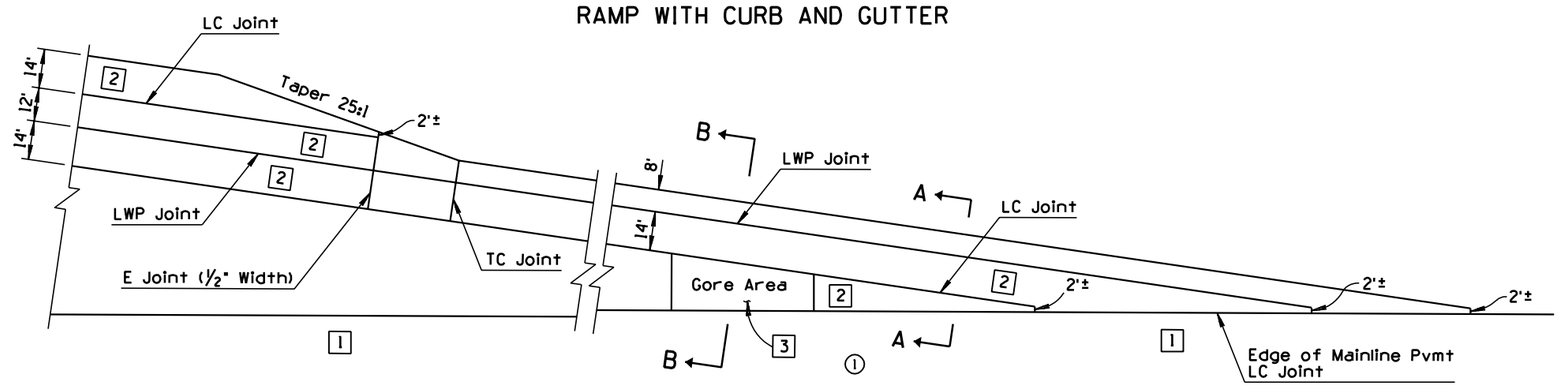

RAMP WITHOUT CURB AND GUTTER

GENERAL NOTES

1. See Std C-07.04 for General Notes and Transverse Joint Layout at Gore Areas.

- ◪ Without Curb & Gutter
- ▲ 6' Minimum
- ● Varies - 18' Maximum ③ 11' Minimum
- ◑ 20' Face of Curb to Face of Curb
- ◨ Transition, See Std C-05.12
- [1] Mainline Structure Section, See Plans
- [2] Ramp Structure Section, See Plans
- [3] Gore Structure Section, See Std C-08.20

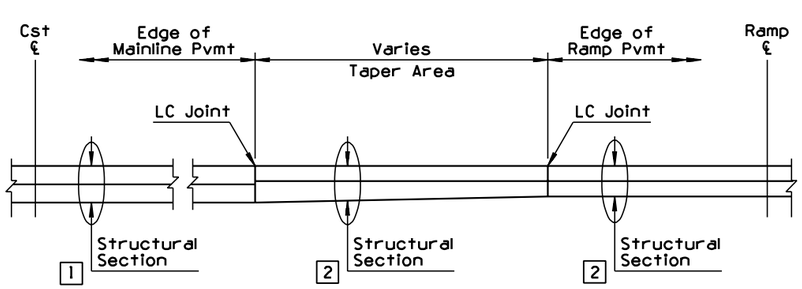

SECTION A-A
RAMP TAPER

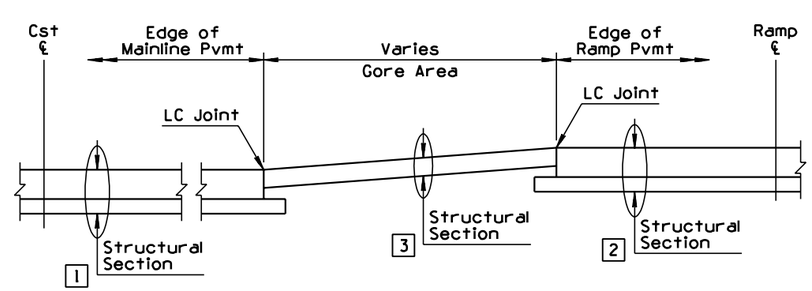

SECTION B-B
GORE AREA

DESIGN APPROVED: Terry H. Otterness	STATE OF ARIZONA DEPARTMENT OF TRANSPORTATION DIVISION OF HIGHWAYS STANDARD DRAWINGS	REV. 8/98
APPROVED FOR DISTRIBUTION: Ronald C. Williams	EXIT RAMP PCCP JOINTS	DRAWING NO. C-07.05

NO	DESCRIPTION OF REVISIONS	MADE BY	DATE
1	REVISED NOTE	PNB	10/95
2			
3			
4			

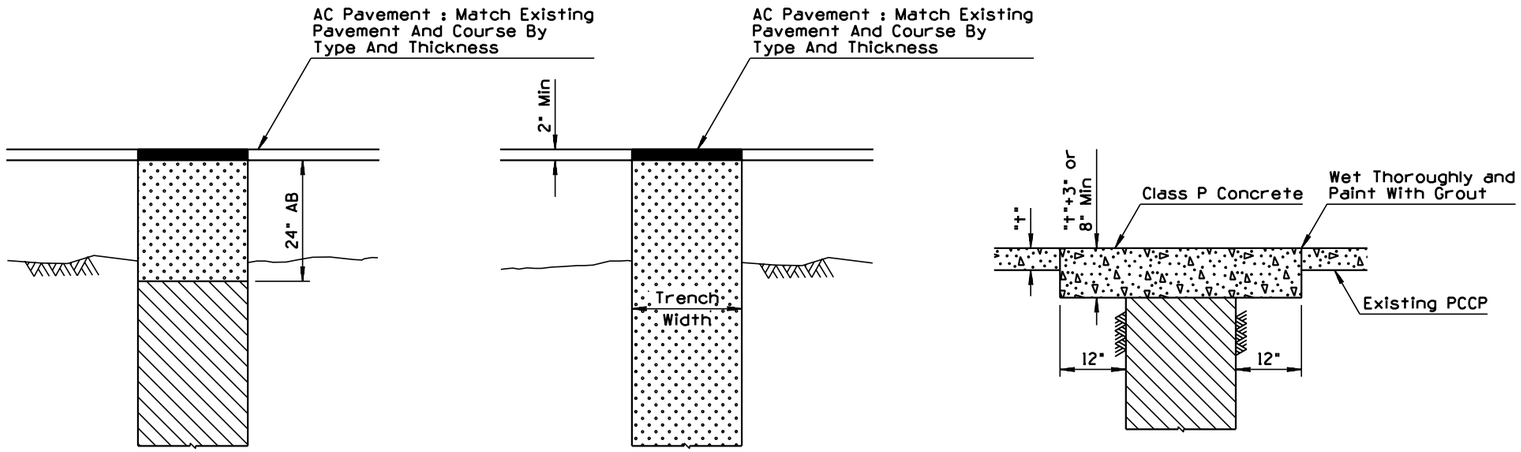

GENERAL NOTES

1. Bedding per Section 501 of the Standard Specifications.
2. Asphalt concrete shall be in accordance with the requirements of the Standard Specifications.
3. 12" lip is required on the sides of trenches that are not parallel at the center line of the street.
4. Types D & E require 9" of AB at top of trench when there is an existing base.
5. See Standard Drawing C-13.15 for Typical pipe installation.

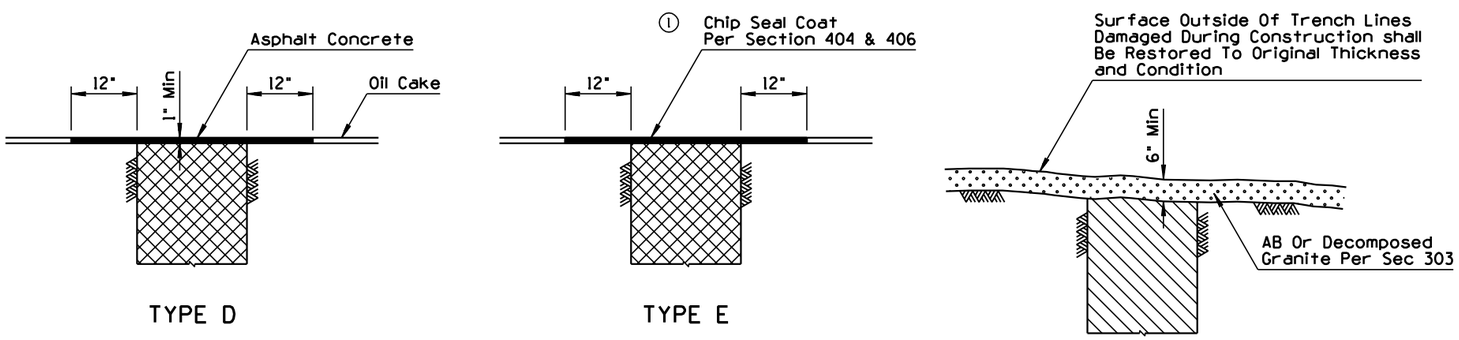

LEGEND

- Compacted Backfill Density Per Section 501
- AB, Granular Backfill or Native Backfill Per Section 302-2 and 501
- AB Per Section 303-2 and 501

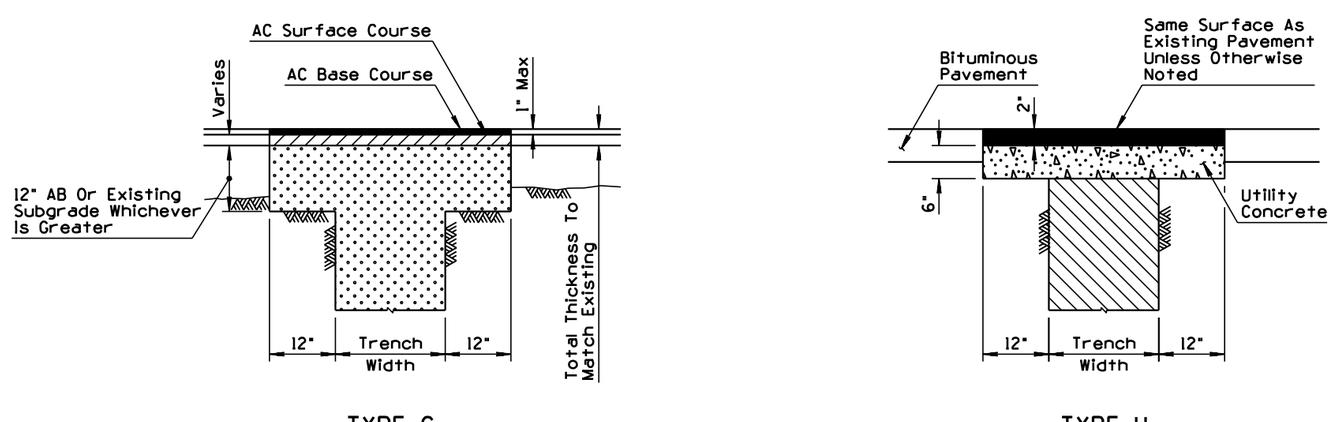

DESIGN APPROVED Terry H. Ottenness	STATE OF ARIZONA DEPARTMENT OF TRANSPORTATION DIVISION OF HIGHWAYS STANDARD DRAWINGS	REV. 10/95
APPROVED FOR DISTRIBUTION Ronald C. Williams	TRENCH BACKFILL AND PAVEMENT REPLACEMENT	DRAWING NO. C-07.06

NO	DESCRIPTION OF REVISIONS	MADE BY	DATE
1	DELETED NOTE & DIMENSION	BAF	7/97
2			
3			
4			

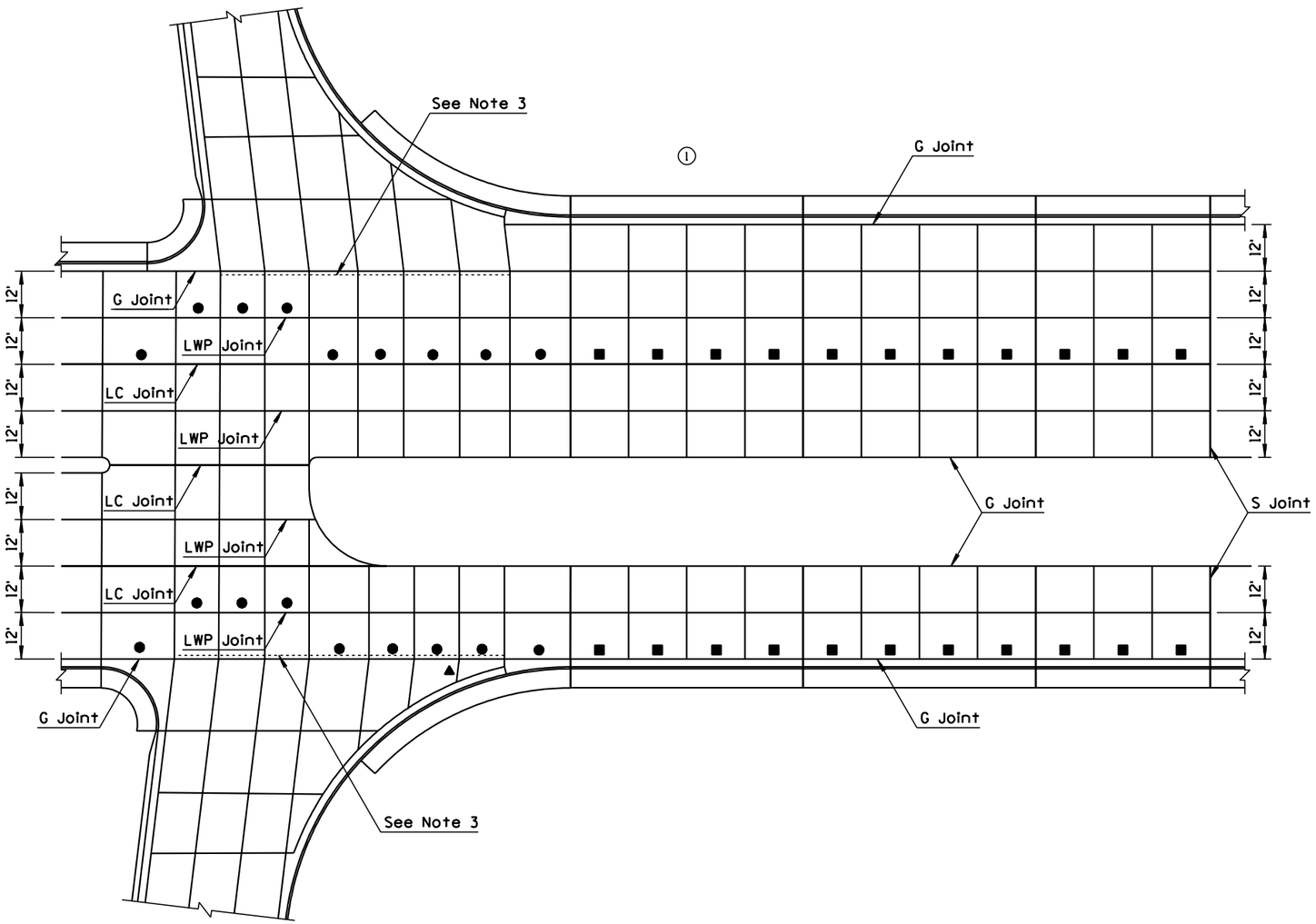

CROSSROAD AT RAMP TERMINAL

GENERAL NOTES

1. See Std C-07.01 for joint information.
2. See plans for crossroad dimensions.
3. See Std C-07.04 and C-07.05 for ramp joints.
4. The ratio of transverse to longitudinal joint spacing shall be greater than 2/3 but not more than 1½.
5. Transverse joints shall be perpendicular (90°) to the longitudinal joints, except as shown at the ramp terminal.

▲ 6' Minimum

● Varies - 18' Maximum
8' Minimum

■ Varies - 12' when adjacent gutter widths are 2' or less.
- 15' when adjacent gutter widths are greater than 2'.

DESIGN APPROVED Terry H. Otterness	STATE OF ARIZONA DEPARTMENT OF TRANSPORTATION DIVISION OF HIGHWAYS STANDARD DRAWINGS	8/98
APPROVED FOR DISTRIBUTION Ronald C. Williams	CROSSROAD PCCP JOINTS	DRAWING NO. C-07.10

NO	DESCRIPTION OF REVISIONS	MADE BY	DATE
1	CORRECTED LEADER LINE	PNB	10/95
2			
3			
4			

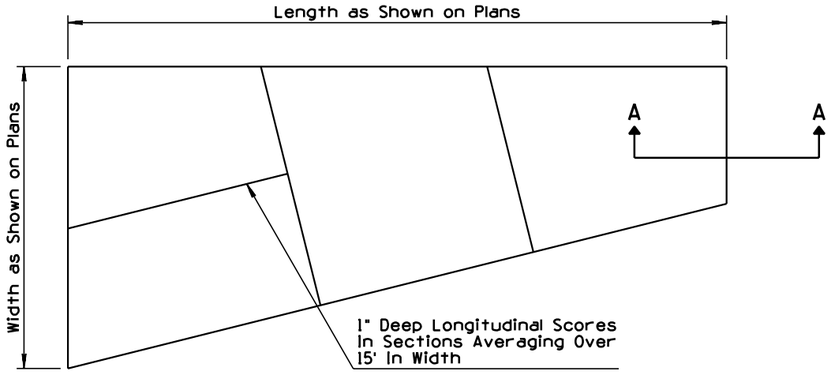

PLAN

CONCRETE GORE AREA
WITH ABUTTING CONCRETE PAVEMENT

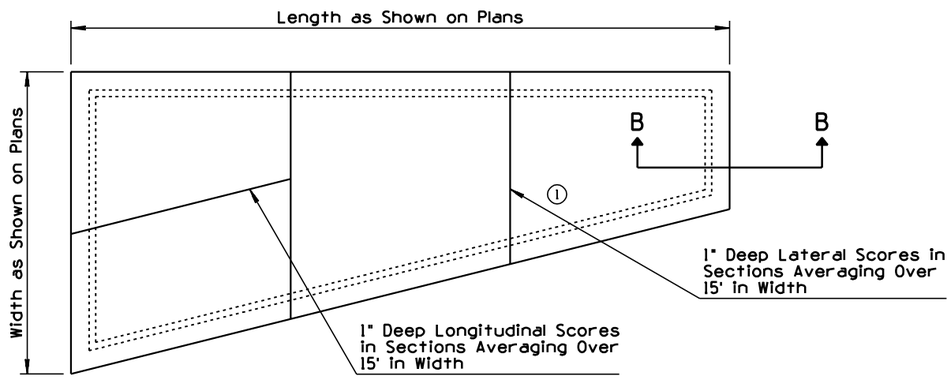

PLAN

CONCRETE GORE AREA
WITH ABUTTING AC PAVEMENT

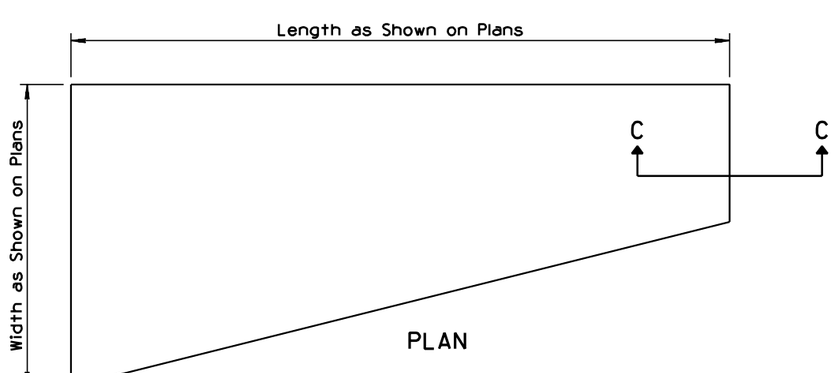

PLAN

ASPHALTIC CONCRETE GORE AREA
WITH ABUTTING AC PAVEMENT

GENERAL NOTES

1. Paved gore area shall be Class S Concrete, f'_c = 4000 psi or asphaltic concrete as called for on plans.
2. See Std. C-07.01 and C-07.04 for joint layout and details.

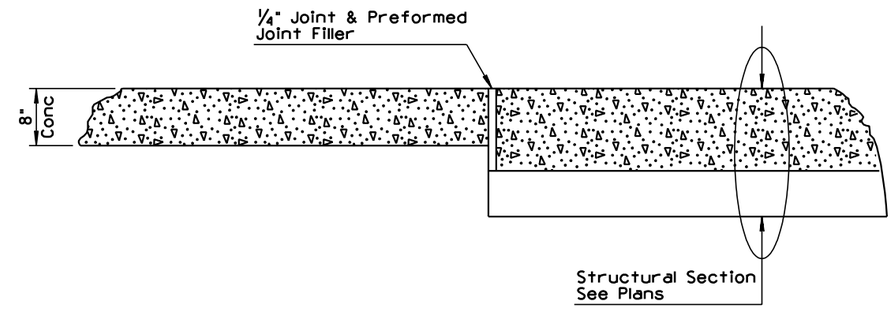

SECTION A-A

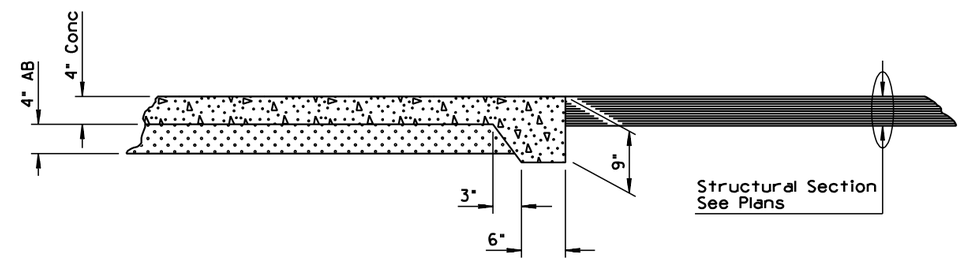

SECTION B-B

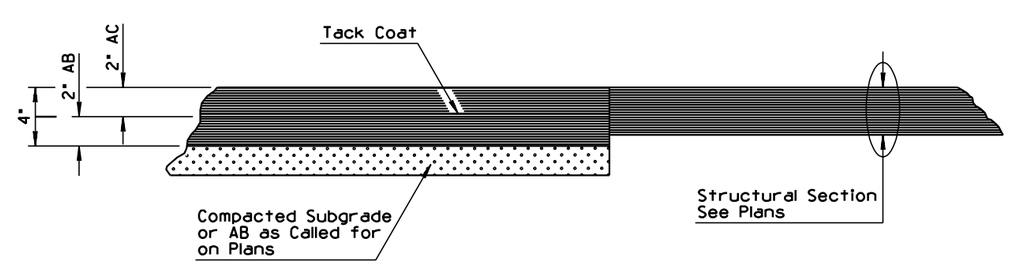

SECTION C-C

DESIGN APPROVED	STATE OF ARIZONA DEPARTMENT OF TRANSPORTATION DIVISION OF HIGHWAYS STANDARD DRAWINGS	REV.
APPROVED FOR DISTRIBUTION		10/95
	PAVED GORE AREA	DRAWING NO. C-08.20

NO	DESCRIPTION OF REVISIONS	MADE BY	DATE
1	REVISED NOTE	RLF	7/01
2	REVISED CALLOUT	RLF	7/01
3	REVISED PLAN	RLF	7/01
4			

GENERAL NOTES

1. All embankment curb shall be protected by guard rail.
2. Guard rail shall extend beyond the limits of embankment curb.
3. See Std. C-10.03 for measurement limits.
4. (1) See Standard Specifications for reflector tab materials, reflective sheeting, and spacing requirements.

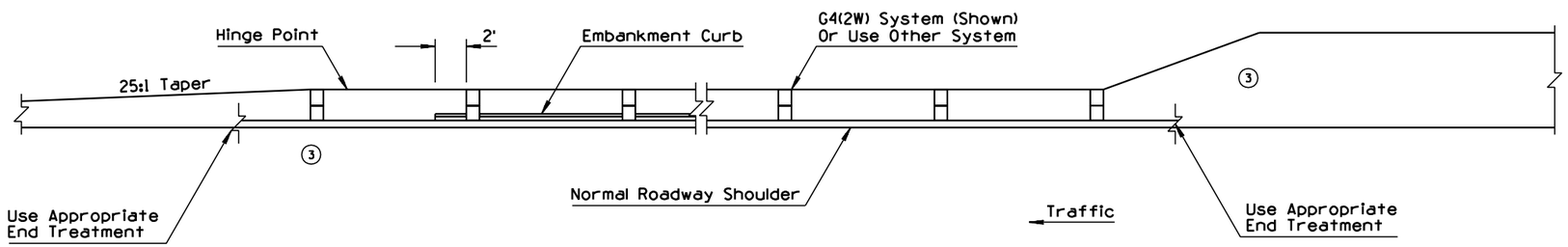

PLAN

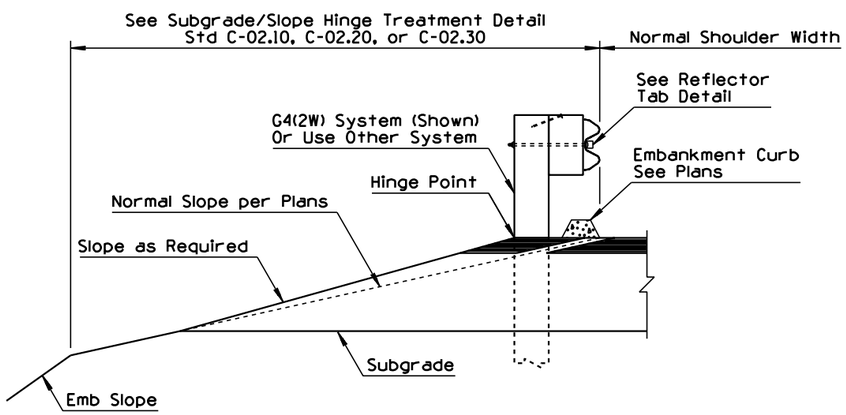

SECTION

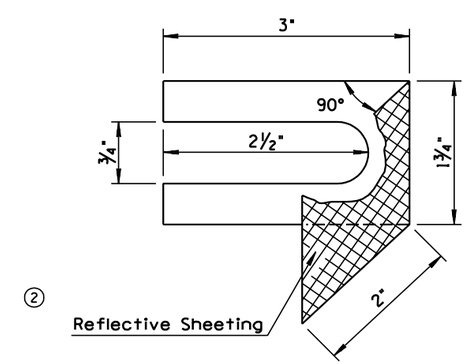

REFLECTOR TAB DETAIL

TYPE A GUARD RAIL INSTALLATION

DESIGN APPROVED	STATE OF ARIZONA DEPARTMENT OF TRANSPORTATION DIVISION OF HIGHWAYS STANDARD DRAWINGS	REV. 7/01
APPROVED FOR DISTRIBUTION	TYPE A GUARD RAIL INSTALLATION, REFLECTOR TAB	DRAWING NO. C-10.01

NO	DESCRIPTION OF REVISIONS	MADE BY	DATE
1	REVISED NOTE	RLF	7/01
2	REVISED CALLOUT	RLF	7/01
3	REVISED PLAN	RLF	7/01
4			

GENERAL NOTES

1. All embankment curb shall be protected by guard rail.
2. Guard rail shall extend beyond the limits of embankment curb.
3. See Std. C-10.03 for measurement limits.
4. (1) See Standard Specifications for reflector tab materials, reflective sheeting, and spacing requirements.

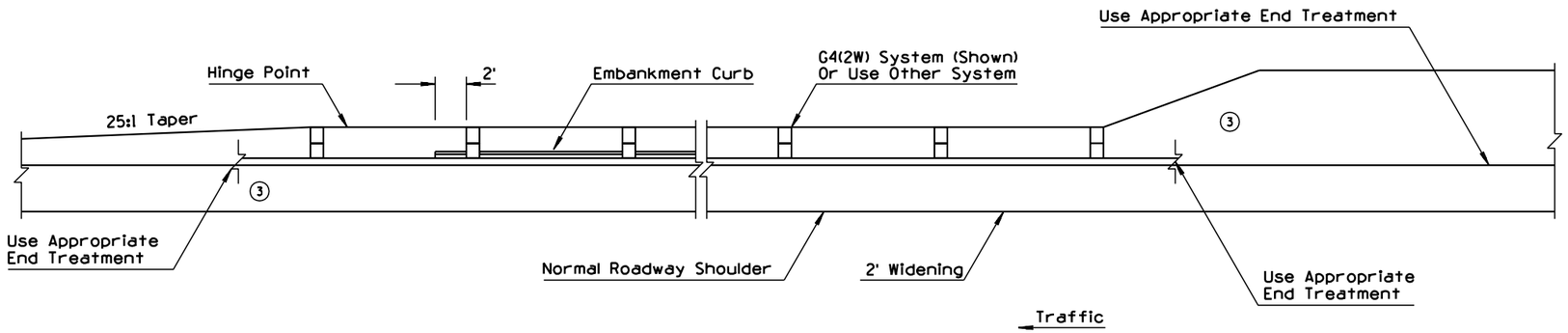

PLAN

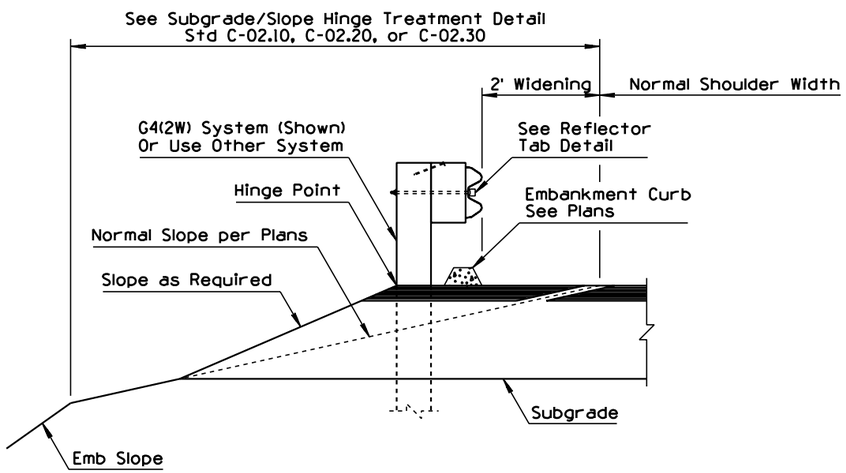

SECTION

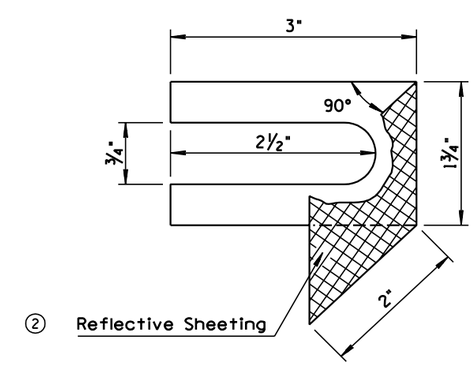

REFLECTOR TAB DETAIL

TYPE B GUARD RAIL INSTALLATION

DESIGN APPROVED APPROVED FOR DISTRIBUTION	STATE OF ARIZONA DEPARTMENT OF TRANSPORTATION DIVISION OF HIGHWAYS STANDARD DRAWINGS	REV. 7/01
	TYPE B GUARD RAIL INSTALLATION, REFLECTOR TAB	DRAWING NO. C-10.02

NO	DESCRIPTION OF REVISIONS	MADE BY	DATE
1	REISSUED STANDARD	RLF	7/01
2			
3			
4			

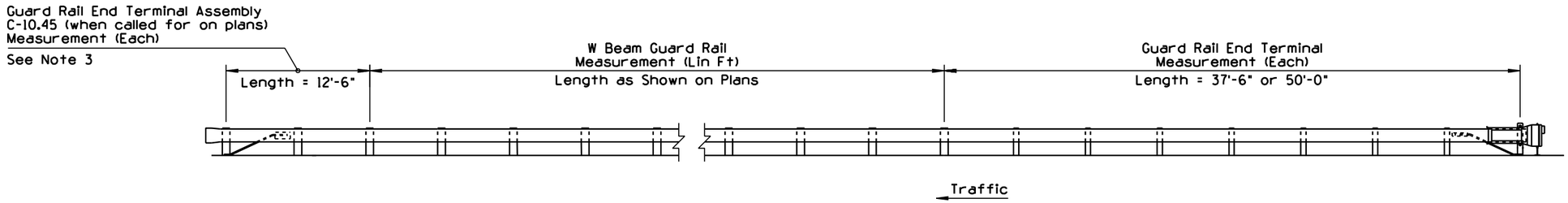

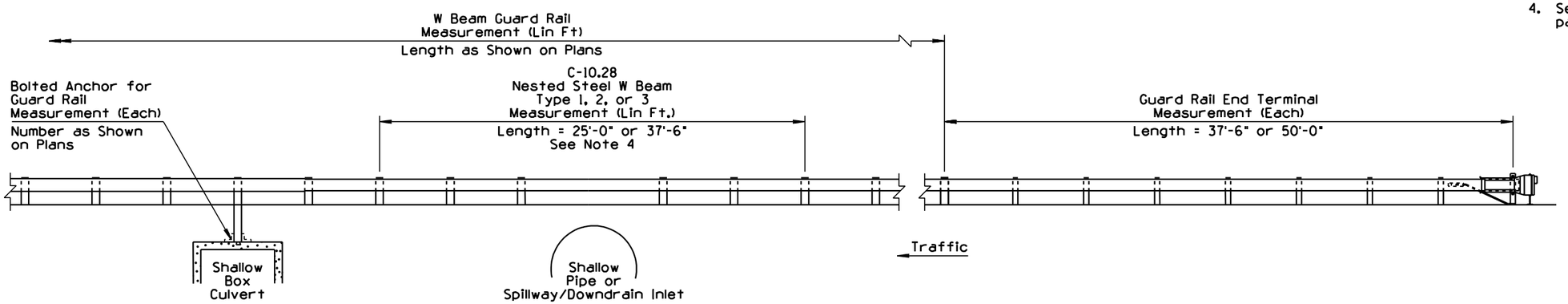

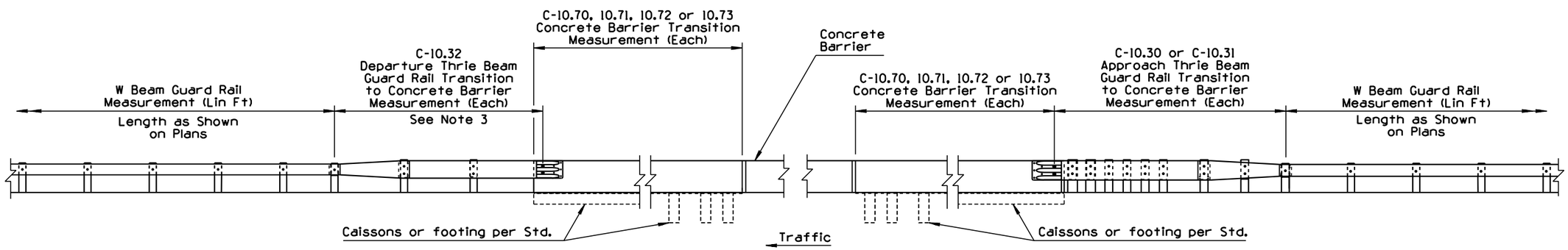

CONCRETE BARRIER TRANSITION
OFF STRUCTURE

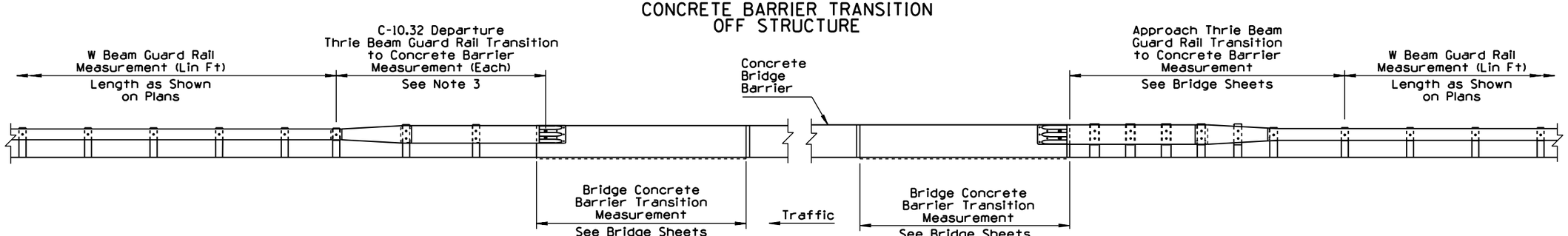

CONCRETE BARRIER TRANSITION ON STRUCTURE

Concrete Barrier Transitions
Constructed on Top of Wingwalls

GENERAL NOTES

1. Length shall be as shown unless otherwise indicated on project plans.
2. Post type (Timber or Steel) for transitions shall match post type of adjoining guard rail.
3. Shown for one-way traffic. For two-way traffic, departure requires approach end treatment when located within the clear zone of opposing traffic.
4. See Specifications for nested guard rail pay item.

DESIGN APPROVED

APPROVED FOR DISTRIBUTION

STATE OF ARIZONA
DEPARTMENT OF TRANSPORTATION
DIVISION OF HIGHWAYS
STANDARD DRAWINGS

REV. 7/01

MEASUREMENT LIMITS FOR
W BEAM SYSTEM (1)

DRAWING NO. C-10.03

NO	DESCRIPTION OF REVISIONS	MADE BY	DATE
1	REVISED NOTE	RLF	7/01
2	REVISED NOTE	RLF	7/01
3	REVISED CALLOUT	RLF	7/01
4	REVISED SECTIONS	RLF	7/01

GENERAL NOTES

1. See plans and barrier summary sheets for location and type of guardrail and end treatments. Timber post installation shown.
2. See Construction Standard Drawings C-05.10, 05.12, 10.01, and 10.02 for dimensions and details not shown.
3. Type B guard rail installation shown. For Type A guard rail installation, use Type D-1 Curb and Gutter instead of the Type D-2 Curb and Gutter shown.
4. See Plans for type and location of drainage facilities.
5. Bituminous joint filler (1/2") shall be placed where the curb & gutter or concrete widening abuts slotted drains, catch basins, dados, barrier, etc. Scored joints, 2 inches in depth, shall be placed to match adjacent joints in PCCP or at 15 ft intervals where adjacent to AC or continuously reinforced concrete pavement.

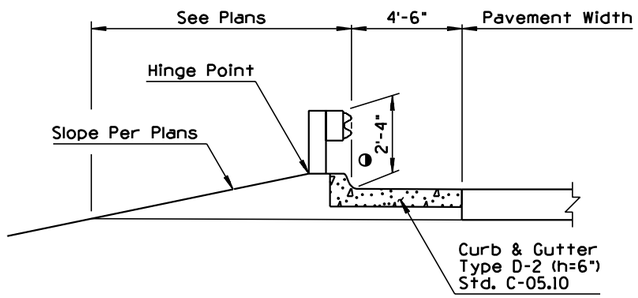

◑ To top of W-beam rail

④ SECTION A-A

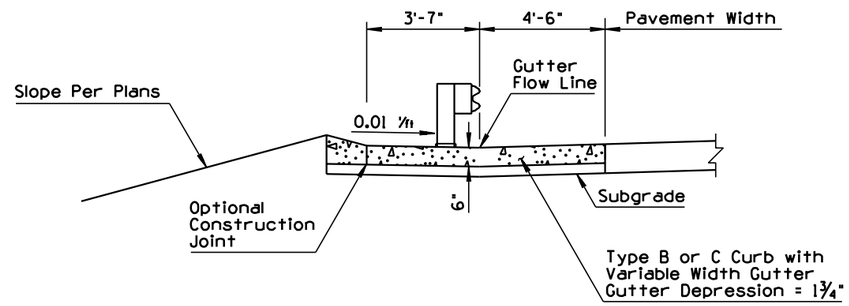

④ SECTION B-B

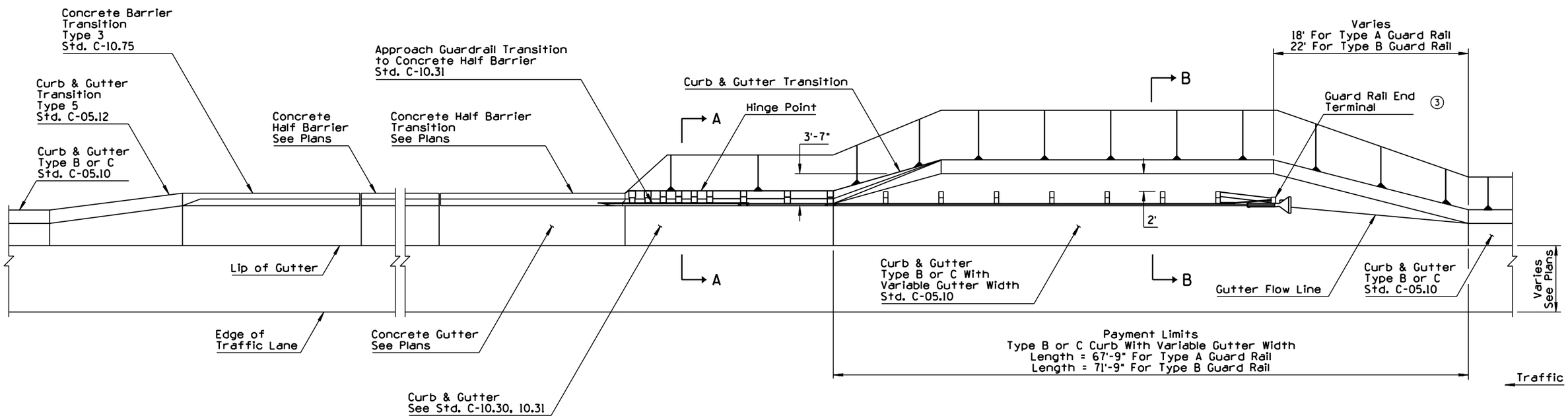

PLAN

TYPICAL HALF BARRIER TERMINAL
W/TYPE B OR C CURB & GUTTER

DESIGN APPROVED	STATE OF ARIZONA DEPARTMENT OF TRANSPORTATION DIVISION OF HIGHWAYS STANDARD DRAWINGS	REV. 7/01
APPROVED FOR DISTRIBUTION	HALF BARRIER TERMINAL W/TYPE B OR C CURB & GUTTER	DRAWING NO. C-10.06

NO	DESCRIPTION OF REVISIONS	MADE BY	DATE
1	REVISED NUMBER FROM C-10.20	PNB	7/94
2	REVISED NOTE	PNB	7/94
3	ADDED NOTE	PNB	7/94
4	DELETED BARRIER DETAILS	PNB	7/94

GENERAL NOTES

(2) 1. See Std 4-C-1.02 for other typical installations at bridge piers.

(2) 2. Transition median paving cross slope to meet level foundation pad. See Plans for length and location.

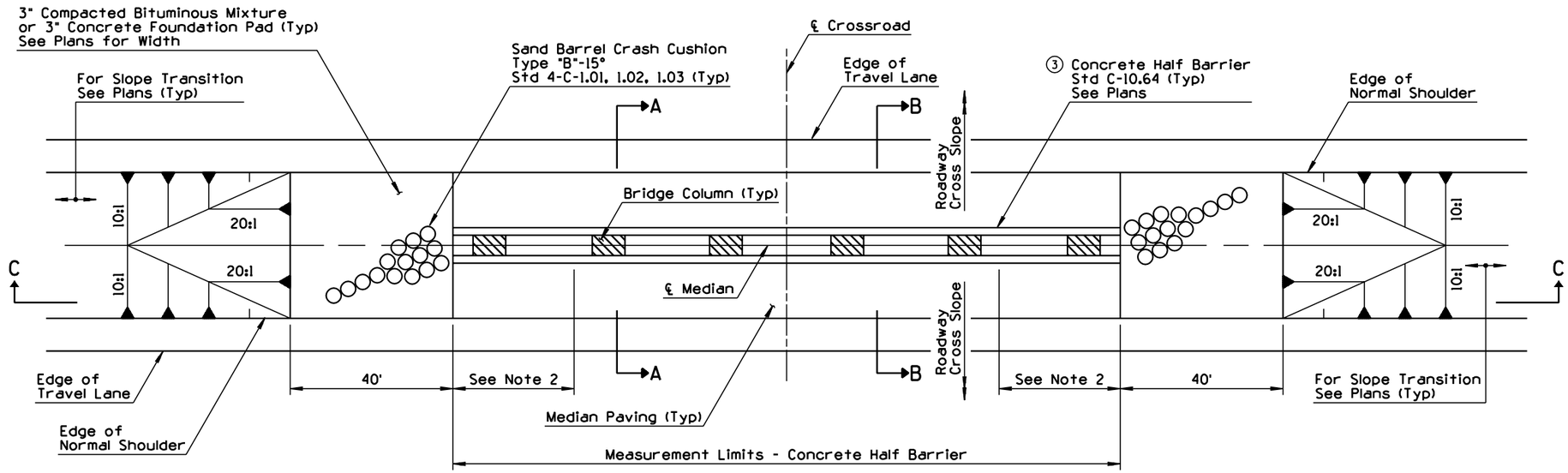

MODIFIED SINGLE PIER OR COLUMN

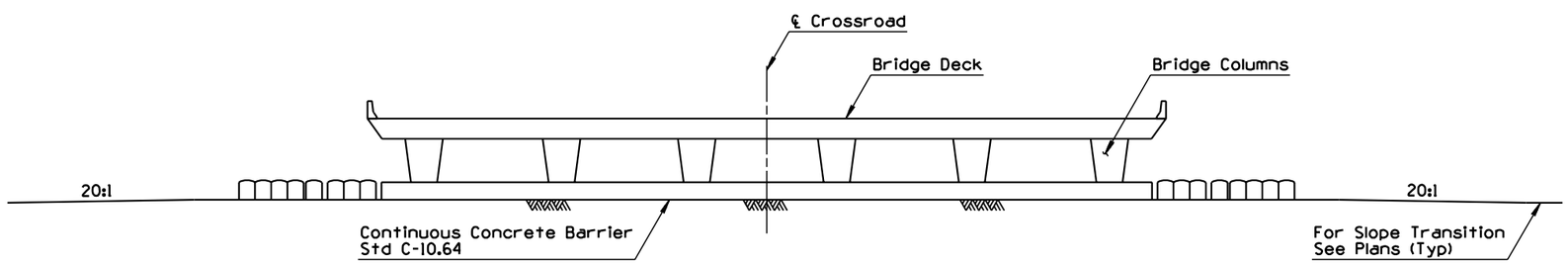

SECTION C-C

(4)

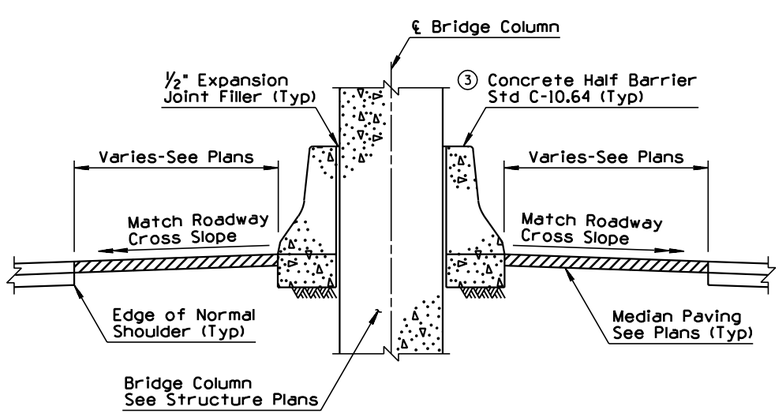

SECTION A-A

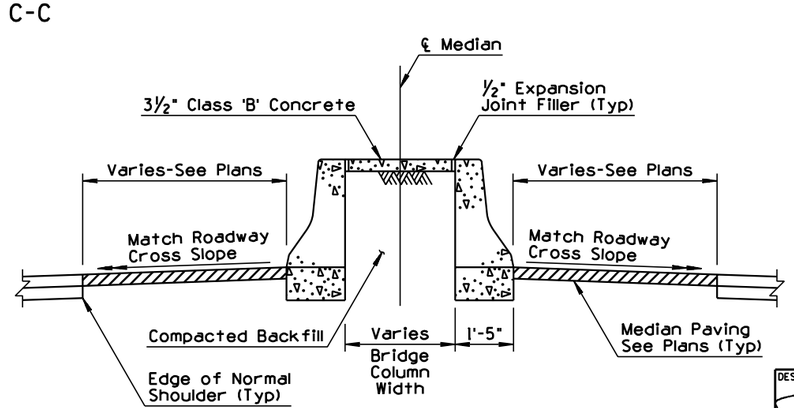

SECTION B-B

DESIGN APPROVED Terry H. Otterness	STATE OF ARIZONA DEPARTMENT OF TRANSPORTATION DIVISION OF HIGHWAYS STANDARD DRAWINGS	REV. 7/94
APPROVED FOR DISTRIBUTION Ronald C. Williams	BARRIER DETAILS AT PIERS	DRAWING NO. (1) C-10.15

NO	DESCRIPTION OF REVISIONS	MADE BY	DATE
1	RAISED GUARD RAIL 1"	RLF	7/01
2			
3			
4			

GENERAL NOTES

● - Indicates ARTBA designation

G4 (1W) SYSTEM

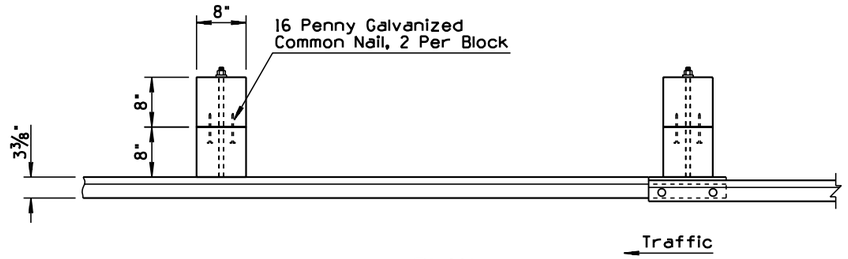

PLAN

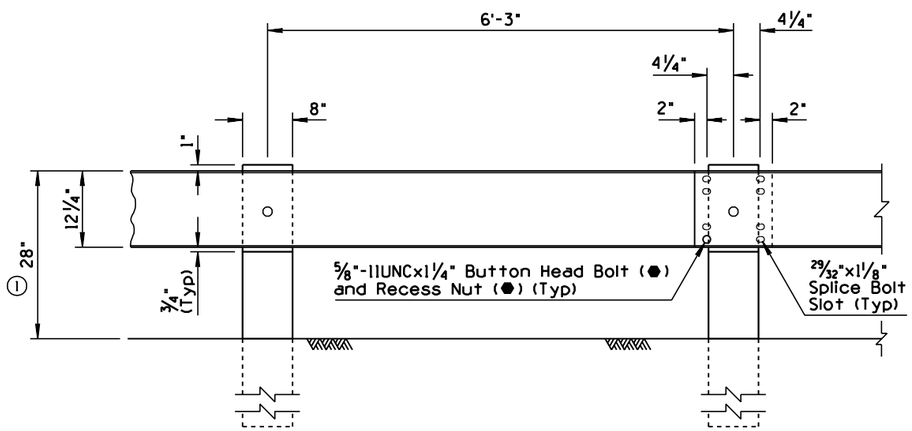

ELEVATION

G4 (1W) SYSTEM

G4 (2W) SYSTEM

PLAN

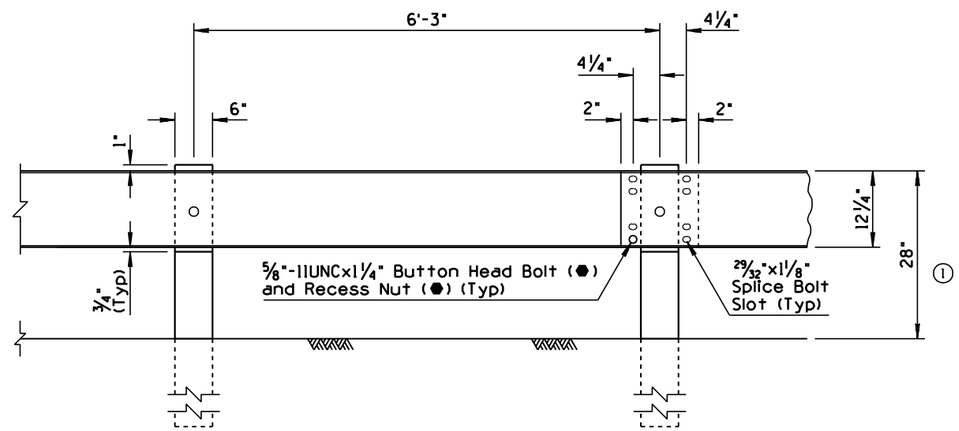

ELEVATION

G4 (2W) SYSTEM

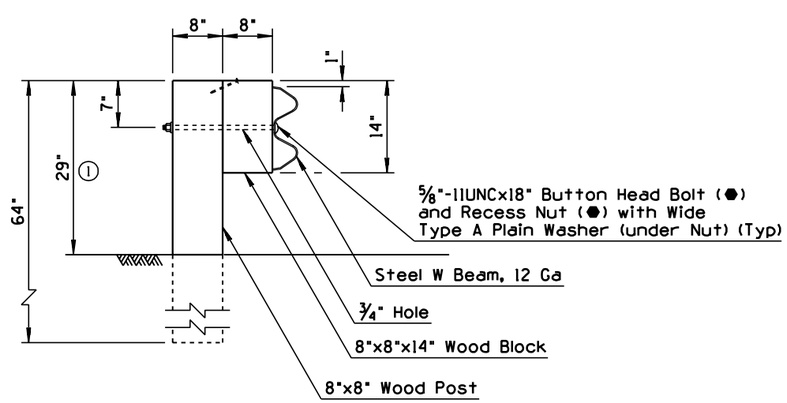

SECTION G4(1W)

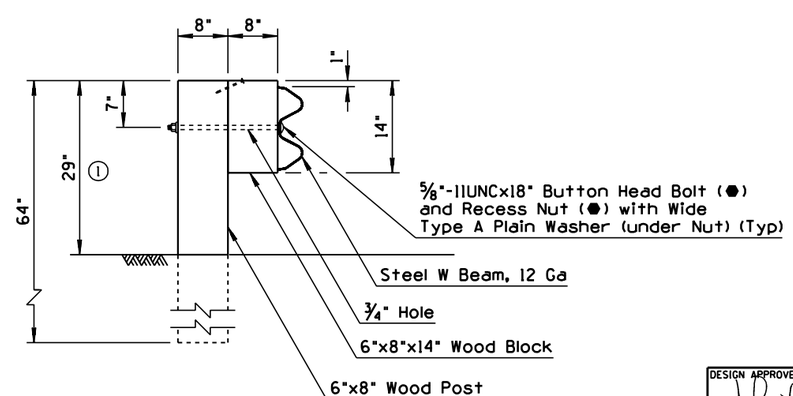

SECTION G4(2W)

DESIGN APPROVED APPROVED FOR DISTRIBUTION	STATE OF ARIZONA DEPARTMENT OF TRANSPORTATION DIVISION OF HIGHWAYS STANDARD DRAWINGS	REV. 7/01
	G4(1W) AND G4(2W) BLOCKED OUT W BEAM (TIMBER POST)	DRAWING NO. C-10.20

NO	DESCRIPTION OF REVISIONS	MADE BY	DATE
1	REPLACED STEEL BLOCK WITH WOOD BLOCK	BAF	5/96
2	RAISED GUARD RAIL 1"	RLF	7/01
3			
4			

G4(IS) SYSTEM

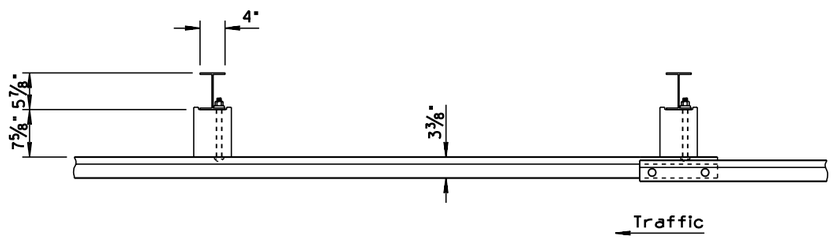

PLAN

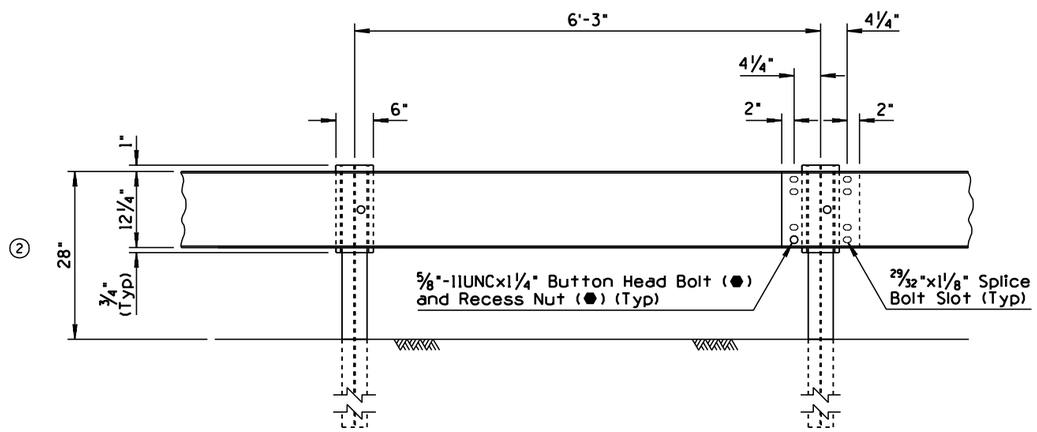

ELEVATION
G4(IS) SYSTEM

GENERAL NOTES

● - Indicates ARTBA designation

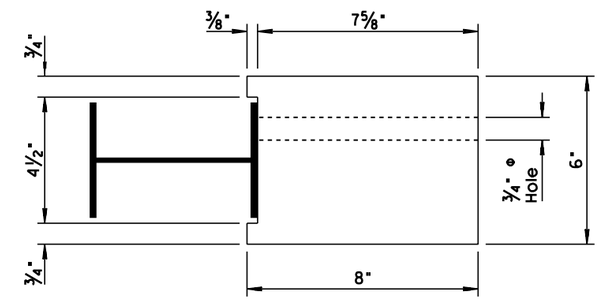

TOP
VIEW

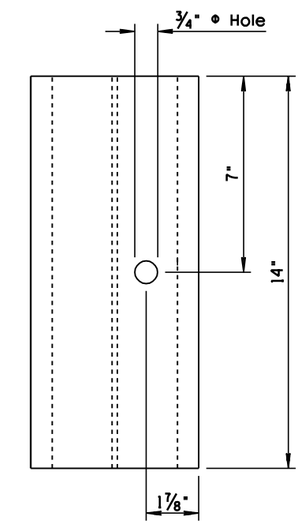

FRONT
VIEW

① WOODEN BLOCK DETAIL

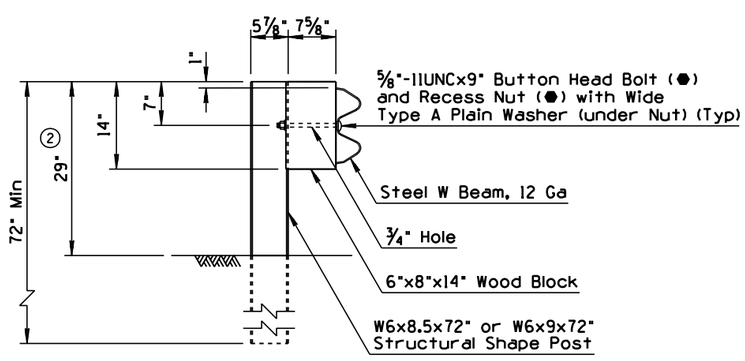

SECTION G4(IS)
SHOWN WITHOUT CURB

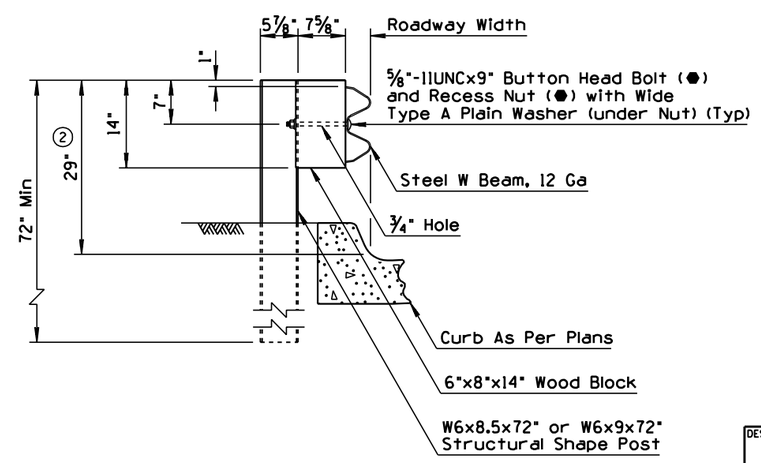

SECTION G4(IS)
SHOWN WITH CURB

DESIGN APPROVED	STATE OF ARIZONA DEPARTMENT OF TRANSPORTATION DIVISION OF HIGHWAYS STANDARD DRAWINGS	REV. 7/01
APPROVED FOR DISTRIBUTION	G4(IS) BLOCKED OUT W BEAM (STEEL POST)	DRAWING NO. C-10.21

NO	DESCRIPTION OF REVISIONS	MADE BY	DATE
1	ADDED TIMBER POST OPTION ON SHEET 2	PNB	10/95
2	DELETED REFERENCES TO GUTTER CROSS SLOPE	PNB	10/95
3	MODIFIED NOTE	BAF	7/97
4	RAISED GUARD RAIL 1"	RLF	7/01

GENERAL NOTES

1. Height of curb shall not exceed 4 inches.

● - Indicates ARTBA designation

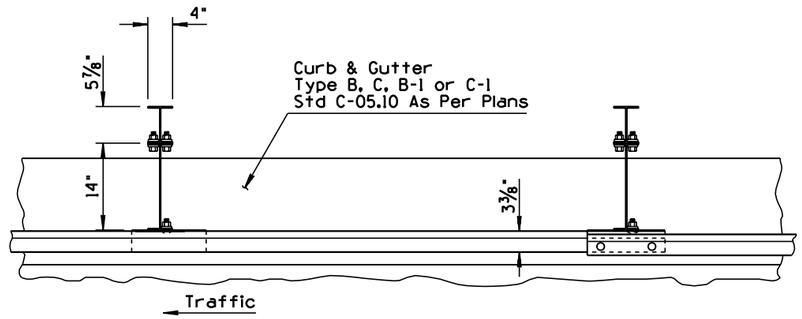

PLAN

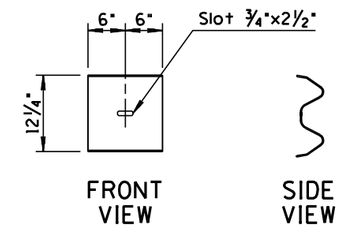

W BEAM BACK-UP PLATE DETAIL

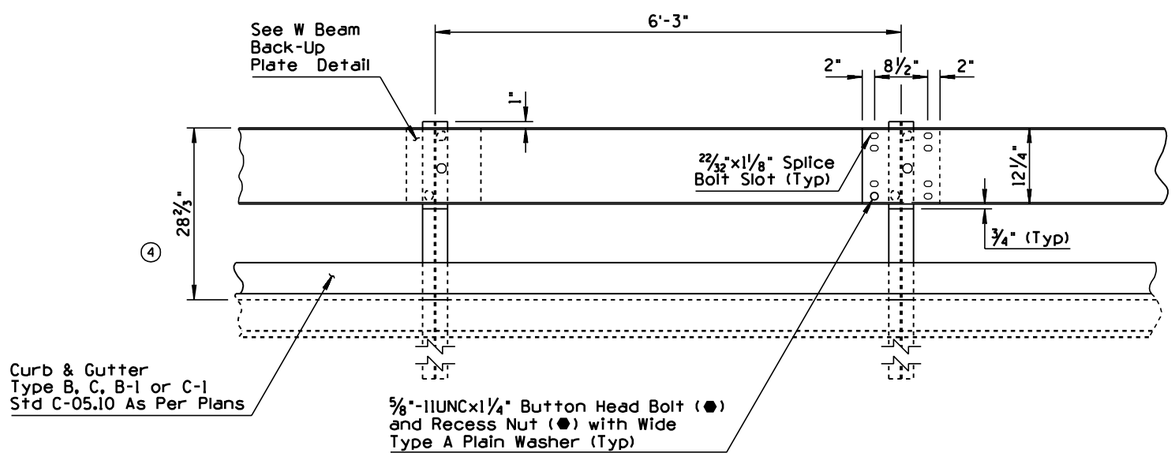

ELEVATION

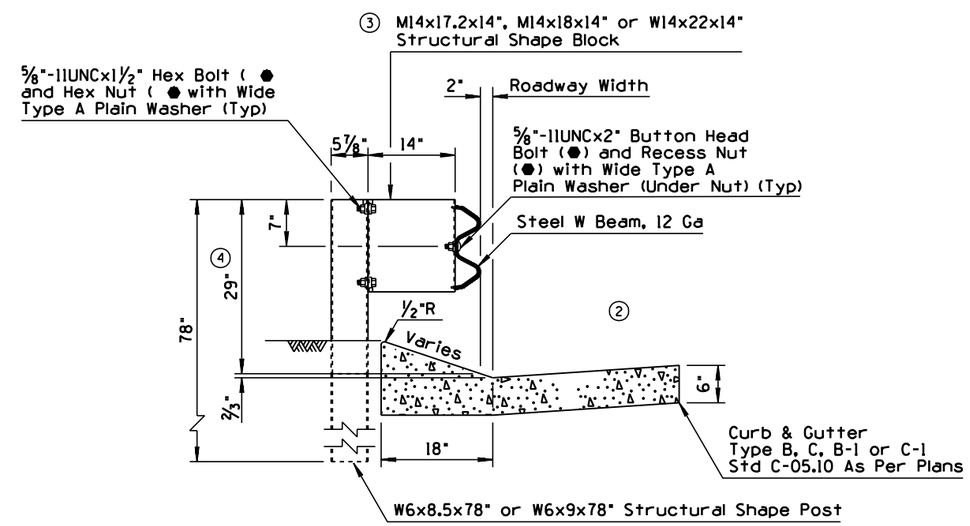

SECTION

G4(1S-MODIFIED)

DESIGN APPROVED	STATE OF ARIZONA DEPARTMENT OF TRANSPORTATION DIVISION OF HIGHWAYS STANDARD DRAWINGS	REV. 7/01
APPROVED FOR DISTRIBUTION	G4(MODIFIED) BLOCKED OUT W BEAM WITH SPECIAL CURB AND GUTTER 1 G4(1S-MODIFIED) (STEEL POST)	DRAWING NO. C-10.22 Sheet 1 of 2

NO	DESCRIPTION OF REVISIONS	MADE BY	DATE
1	RAISED GUARD RAIL 1"	RLF	7/01
2			
3			
4			

GENERAL NOTES

● - Indicates ARTBA designation

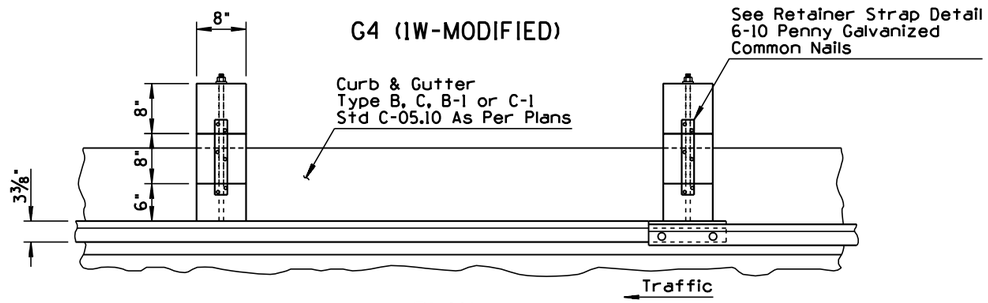

PLAN

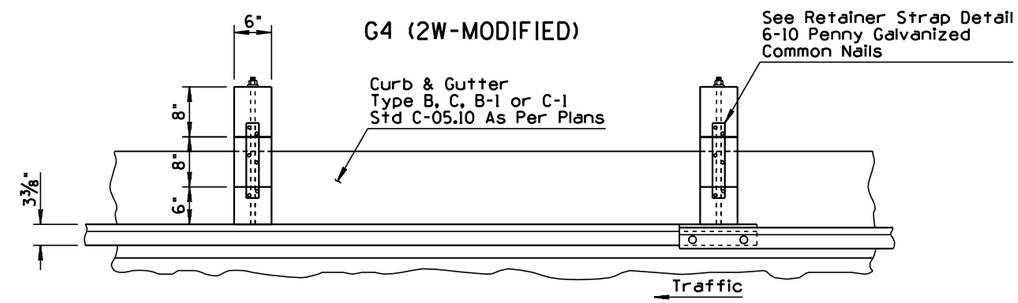

PLAN

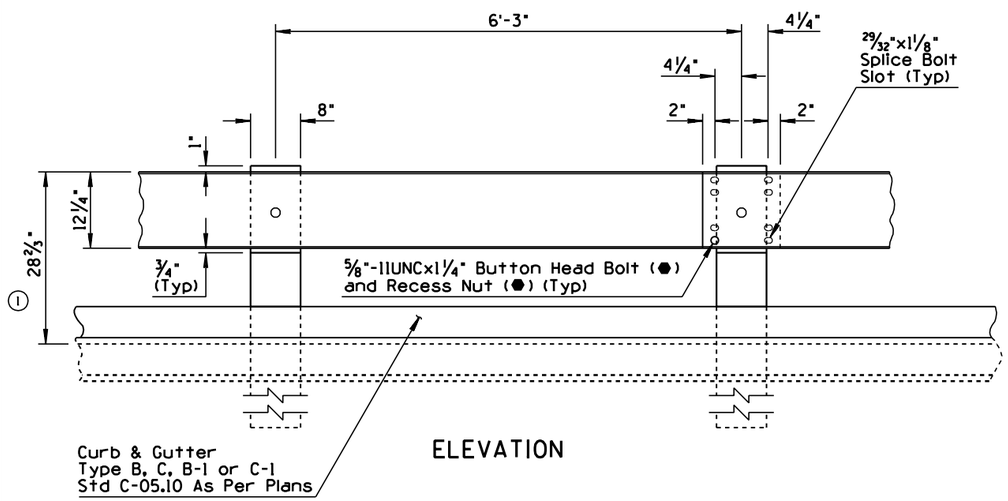

ELEVATION

G4 (1W-MODIFIED)

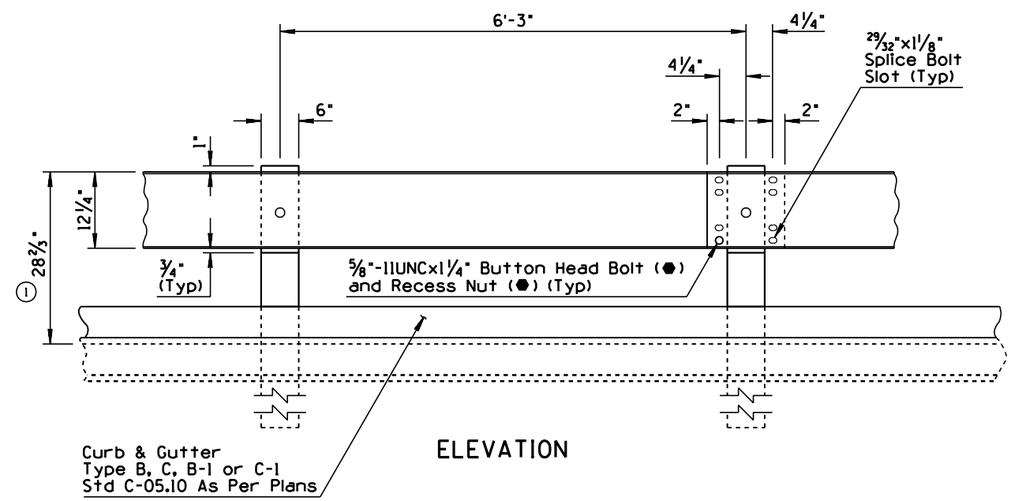

ELEVATION

G4 (2W-MODIFIED)

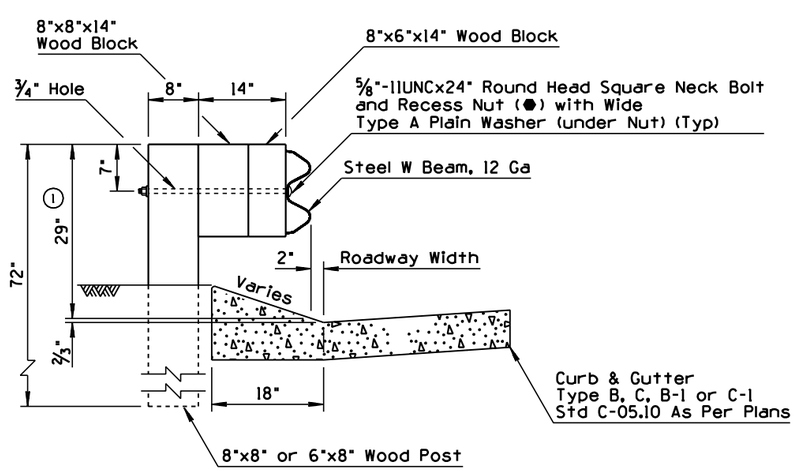

SECTION G4(1W-MODIFIED)

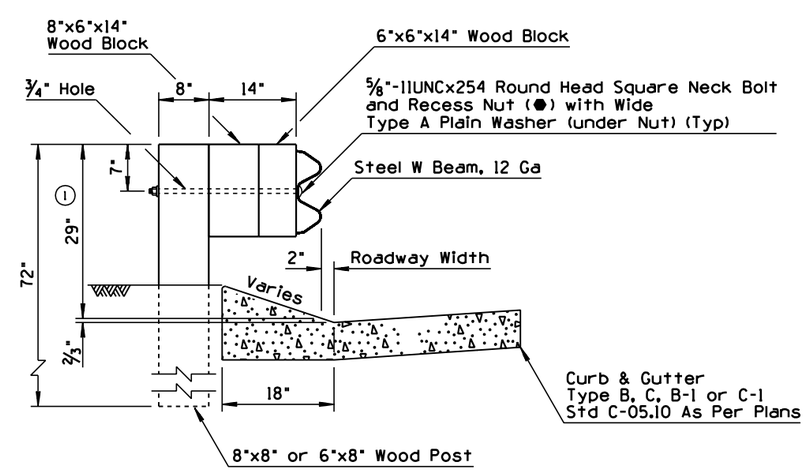

SECTION G4(2W-MODIFIED)

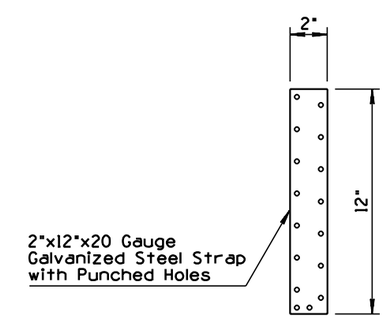

RETAINER STRAP DETAIL

DESIGN APPROVED

APPROVED FOR DISTRIBUTION

STATE OF ARIZONA
DEPARTMENT OF TRANSPORTATION
DIVISION OF HIGHWAYS
STANDARD DRAWINGS

REV. 7/01

G4(MODIFIED) BLOCKED OUT W BEAM
WITH SPECIAL CURB AND GUTTER
G4(1W) AND G4(2W) (TIMBER POST)

DRAWING NO. C-10.22
Sheet 2 of 2

NO	DESCRIPTION OF REVISIONS	MADE BY	DATE
1	REVISED TITLE	RLF	7/01
2	REVISED CALLOUT	RLF	7/01
3	REVISED POST LENGTH DIMENSION	RLF	7/01
4			

GENERAL NOTES

● - Indicates ARTBA designation

G9 (C) SYSTEM

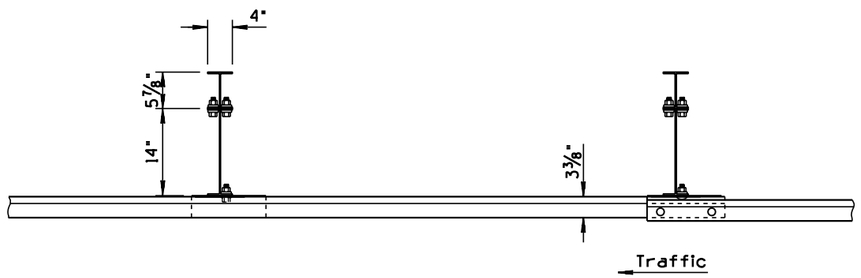

PLAN

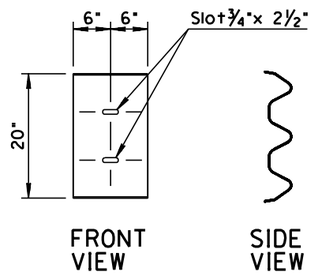

THRIE BEAM BACK-UP PLATE DETAIL

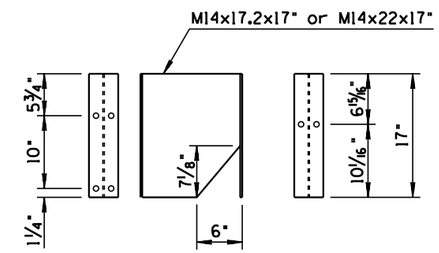

STRUCTURAL SHAPE BLOCK DETAIL

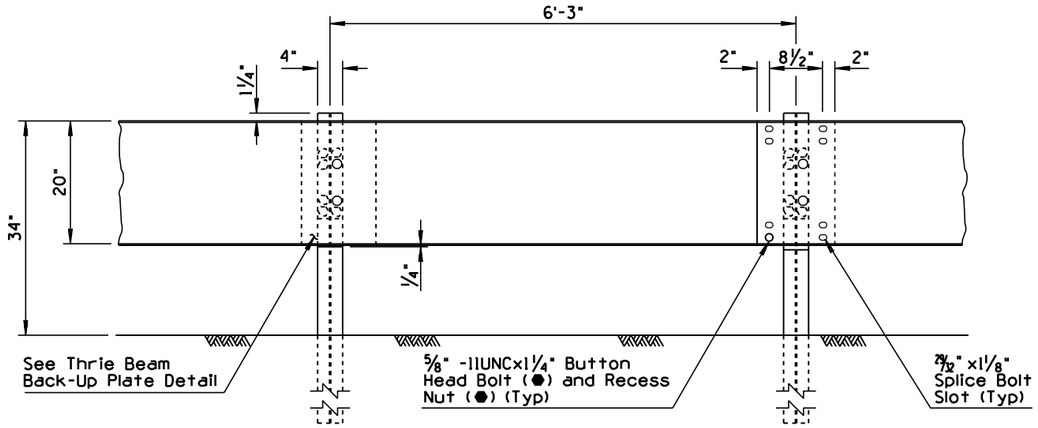

ELEVATION

G9 (C) SYSTEM

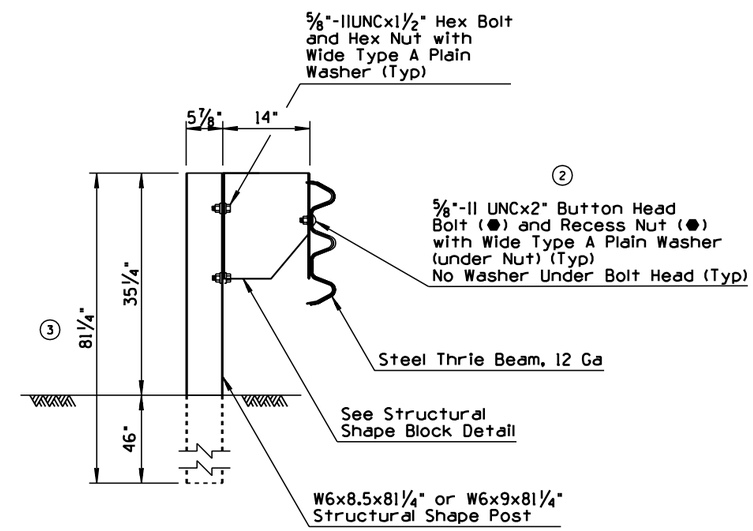

SECTION G9(C)

DESIGN APPROVED	STATE OF ARIZONA DEPARTMENT OF TRANSPORTATION DIVISION OF HIGHWAYS STANDARD DRAWINGS	REV. 7/01
APPROVED FOR DISTRIBUTION	MODIFIED ① THRIE BEAM (STEEL POST)	DRAWING NO. C-10.24

NO	DESCRIPTION OF REVISIONS	MADE BY	DATE
1	ADDED NOTE	RLF	7/01
2	INDICATED LOCATION OF 72" POSTS	RLF	7/01
3			
4			

GENERAL NOTES

1. ● - Indicates ARTBA designation.
2. See Std C-10.20 and C-10.21 for additional information and dimensions.
3. (1) Install Type 1 when splice connection location falls on object. Install Type 2 when non-splice connection falls on object.

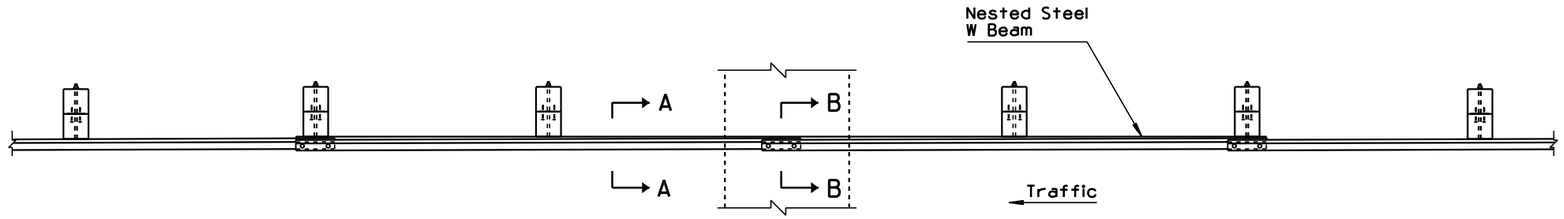

PLAN

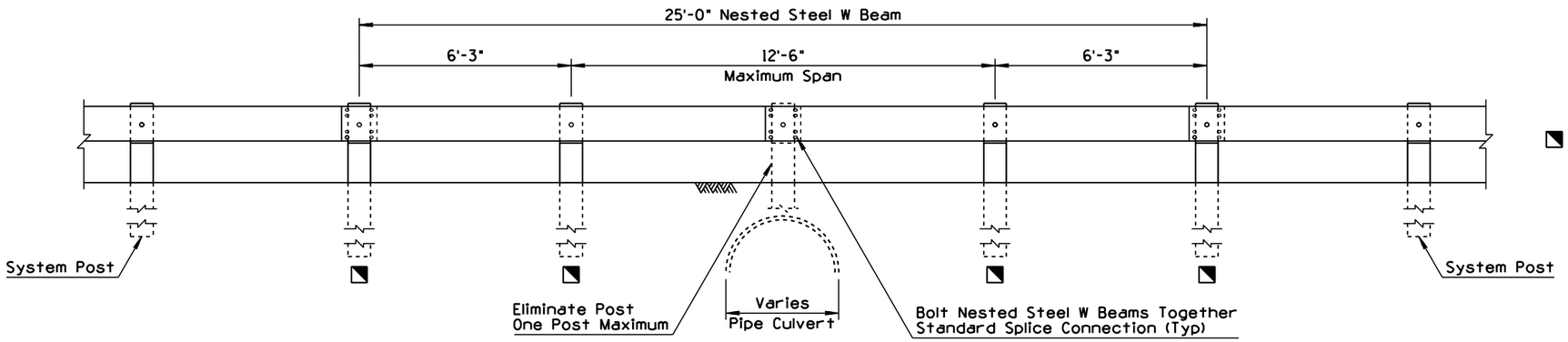

(2) 72" Timber Post

ELEVATION
NESTED STEEL W BEAM - TYPE 1 - SHORT SPAN
(Splice Connection Inside Span) Length = 25'-0"

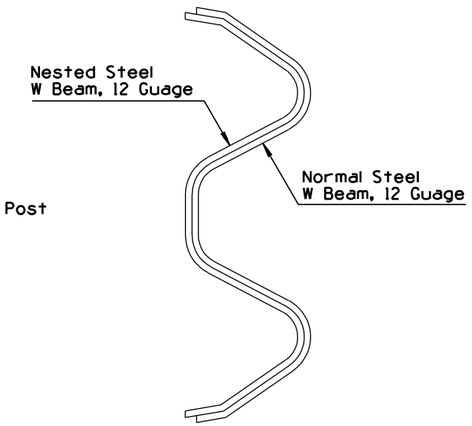

SECTION A-A

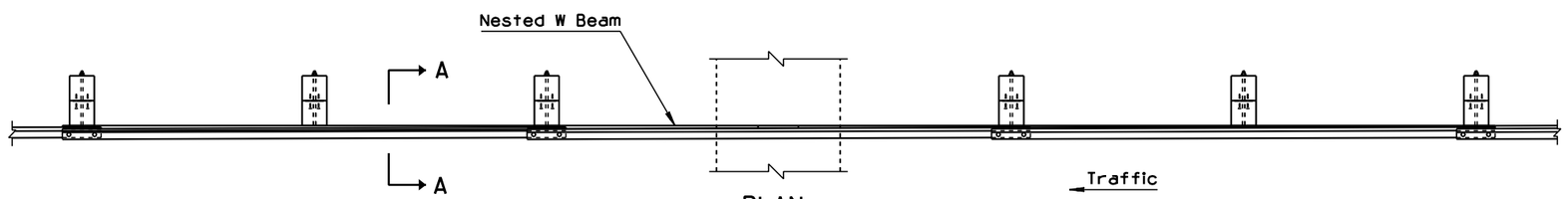

PLAN

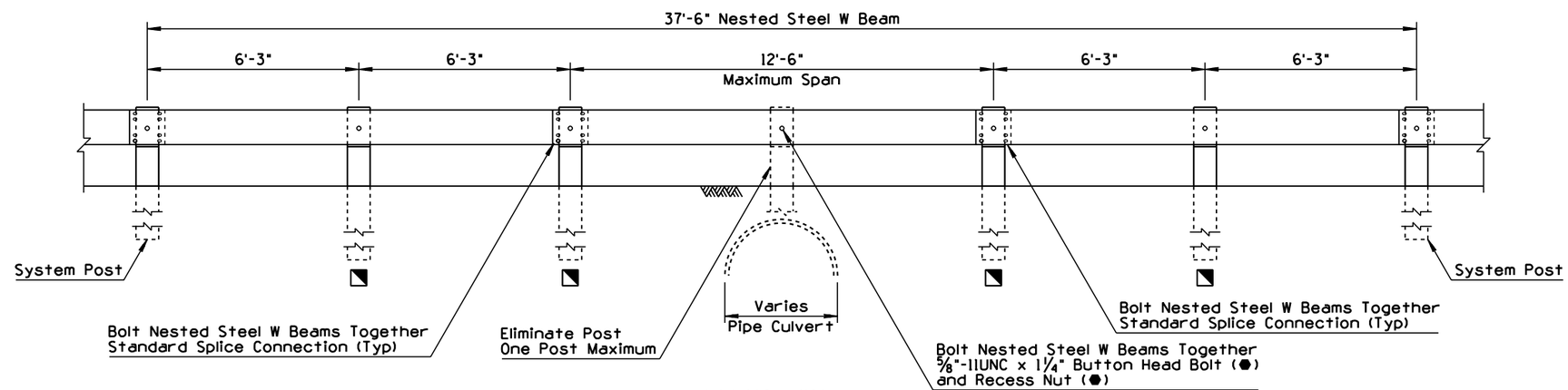

ELEVATION
NESTED STEEL W BEAM - TYPE 2 - SHORT SPAN
(Splice Connection Outside Span) Length = 37'-6"

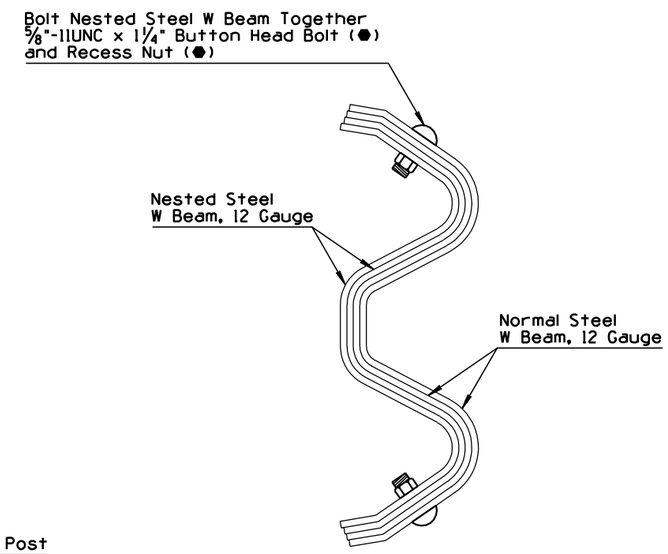

SECTION B-B

DESIGN APPROVED John L. Lewis	STATE OF ARIZONA DEPARTMENT OF TRANSPORTATION DIVISION OF HIGHWAYS STANDARD DRAWINGS	REV. 7/01
APPROVED FOR DISTRIBUTION Ronald C. Williams	NESTED STEEL W BEAM SHORT SPAN - TYPE 1 AND 2	DRAWING NO. C-10.28 Sheet 1 of 2

NO	DESCRIPTION OF REVISIONS	MADE BY	DATE
1	ADDED REFERENCE	RLF	7/01
2	INDICATED LOCATION OF 72" POSTS	RLF	7/01
3			
4			

GENERAL NOTES

1. Use Type 3 Nested Steel W Beam to span downdrain or spillway inlets as shown in the plan view.
2. Use Type 3 to span multiple obstructions as shown in the elevation view.

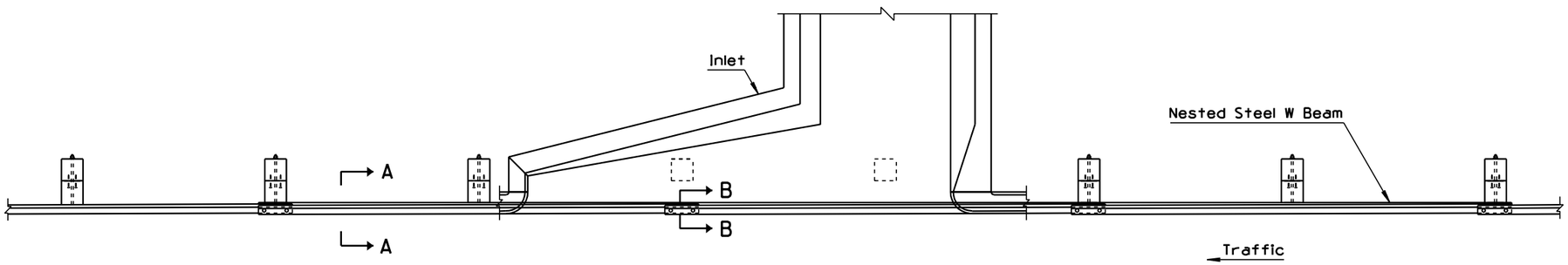

① See Sheet 1 of 2 for Sections A-A and B-B

PLAN

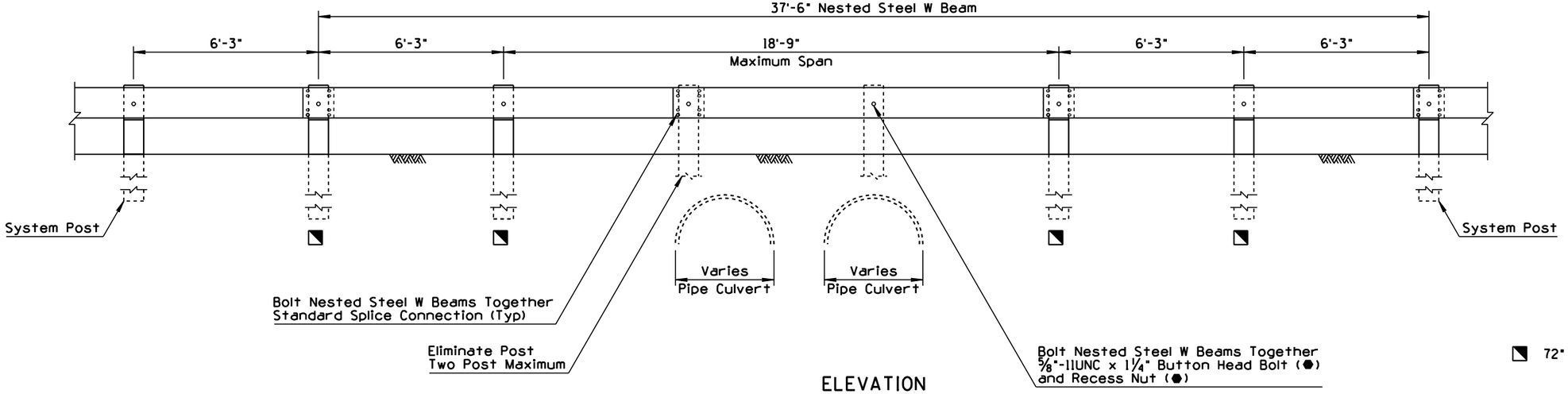

② 72" Timber Post

ELEVATION

NESTED STEEL W BEAM - TYPE 3 - LONG SPAN
Length = 37'-6"

DESIGN APPROVED John L. Lewis APPROVED FOR DISTRIBUTION Ronald C. Williams	STATE OF ARIZONA DEPARTMENT OF TRANSPORTATION DIVISION OF HIGHWAYS STANDARD DRAWINGS	REV. 7/01
	NESTED STEEL W BEAM LONG SPAN - TYPE 3	DRAWING NO. C-10.28 Sheet 2 of 2

NO	DESCRIPTION OF REVISIONS	MADE BY	DATE
1	REVISED DRAWING	RLF	7/01
2	INDICATED LOCATION OF 72" POSTS	RLF	7/01
3			
4			

GENERAL NOTES

1. See Std C-10.20 and C-10.21 for additional information and dimensions.

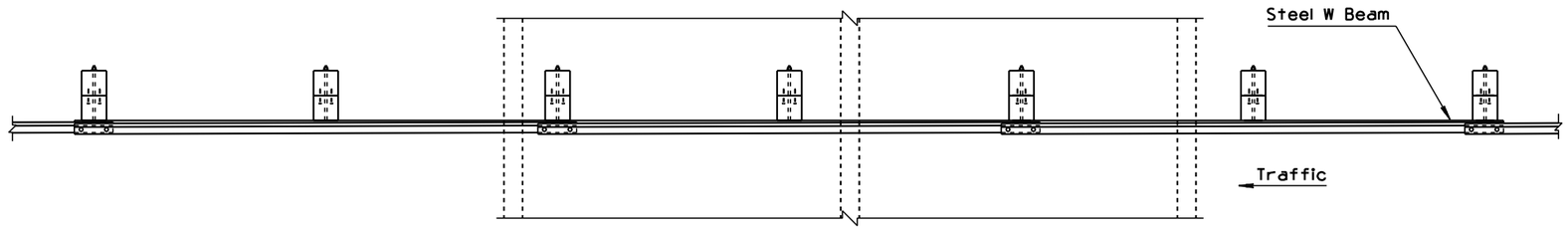

PLAN

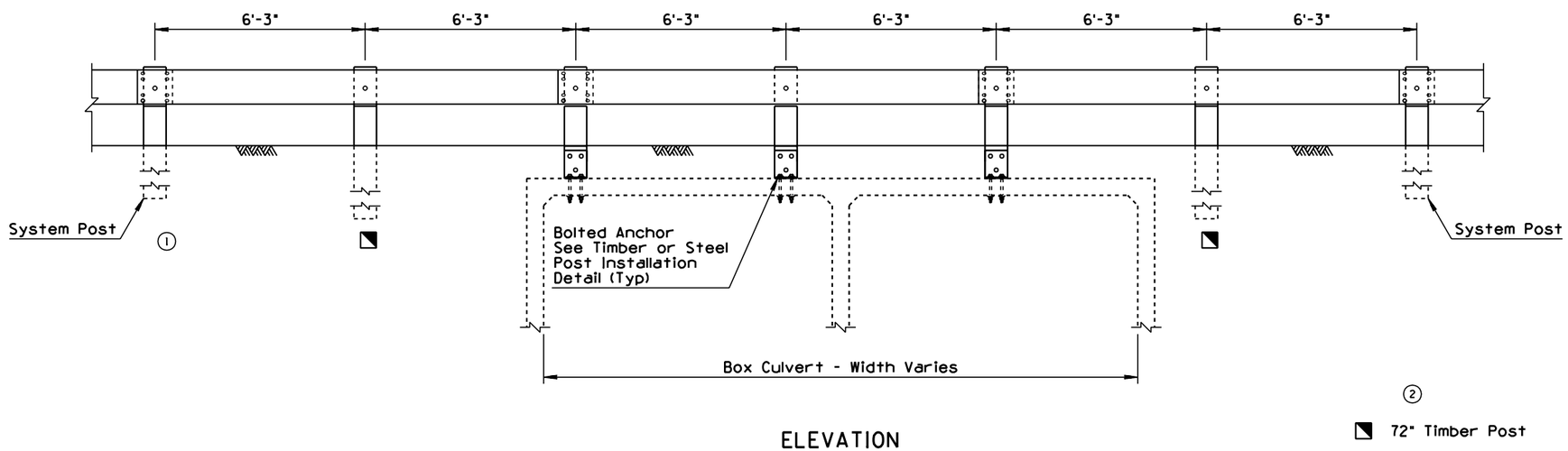

ELEVATION

BOLTED ANCHOR
BOX CULVERT INSTALLATION

DESIGN APPROVED	STATE OF ARIZONA DEPARTMENT OF TRANSPORTATION DIVISION OF HIGHWAYS STANDARD DRAWINGS	REV. 7/01
APPROVED FOR DISTRIBUTION	BOLTED ANCHOR GUARD RAIL	DRAWING NO. C-10.29 Sheet 1 of 2

NO	DESCRIPTION OF REVISIONS	MADE BY	DATE
1	RAISED GUARD RAIL 1"	RLF	7/01
2			
3			
4			

GENERAL NOTES

1. Drill through top of box culvert with rotary drill.
2. Bracket may be made of one piece hot bent, or two pieces welded together.
3. Short timber posts anchored to box culvert roof shall be 8" x 8" only.

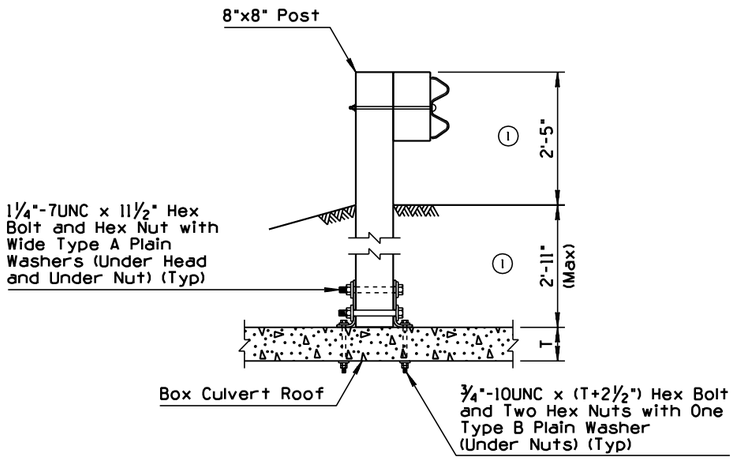

INSTALLATION DETAIL

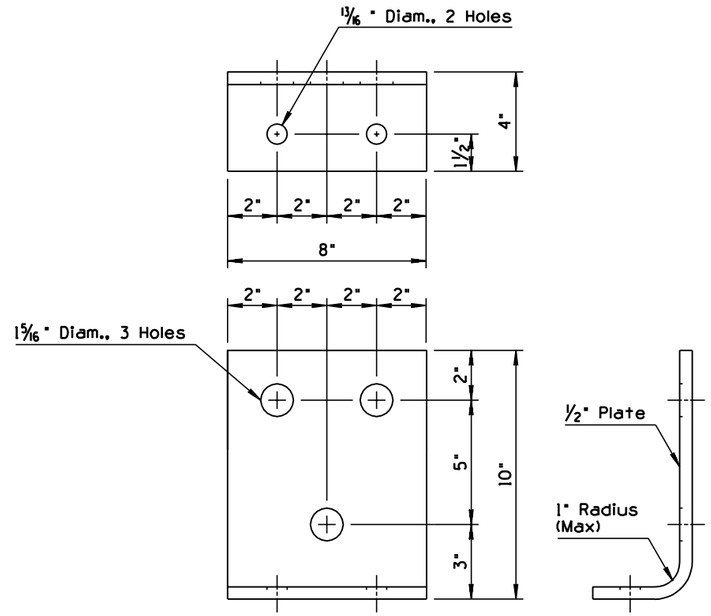

BRACKET DETAIL

BOLTED ANCHOR
TIMBER POST INSTALLATION DETAIL

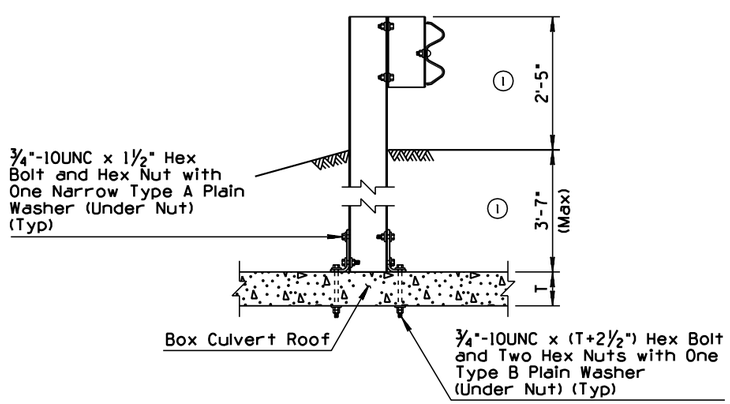

INSTALLATION DETAIL

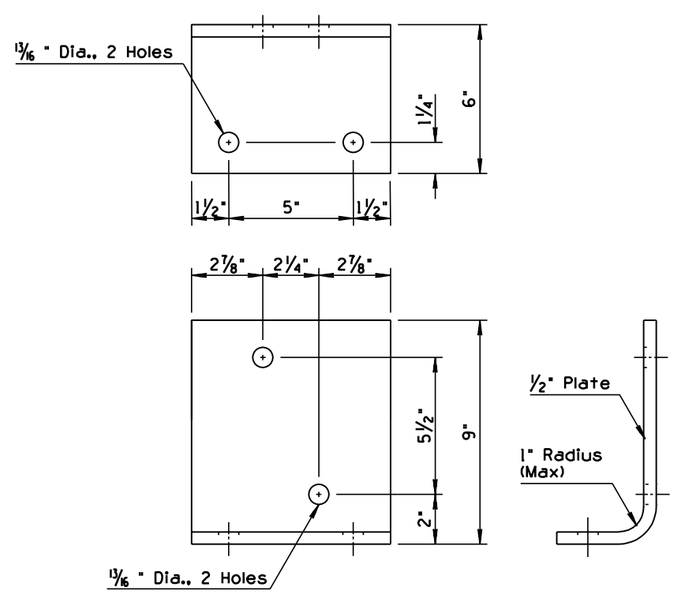

BRACKET DETAIL

BOLTED ANCHOR
STEEL POST INSTALLATION DETAIL

DESIGN APPROVED	STATE OF ARIZONA DEPARTMENT OF TRANSPORTATION DIVISION OF HIGHWAYS STANDARD DRAWINGS	REV. 7/01
APPROVED FOR DISTRIBUTION	BOLTED ANCHOR GUARD RAIL	DRAWING NO. C-10.29 Sheet 2 of 2

NO	DESCRIPTION OF REVISIONS	MADE BY	DATE
1	RAISED THRIE BEAM 1"	RLF	7/01
2	REVISED FROM PIPE TO SLEEVE	RLF	7/01
3			
4			

GENERAL NOTES

1. For use with one-way traffic or with two-way traffic outside the clear zone.

⬢ - Indicate ARTBA designation.

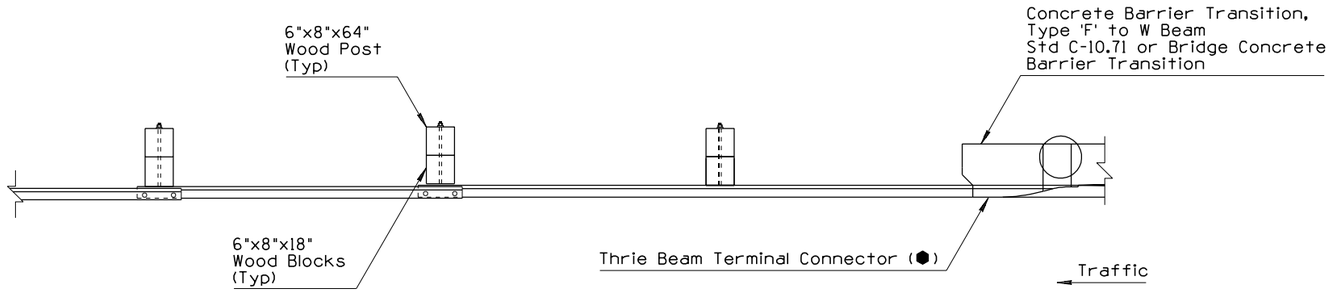

PLAN

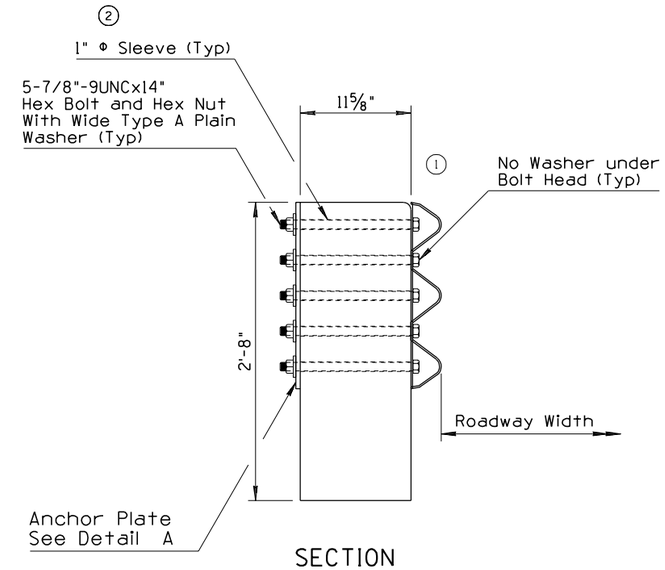

SECTION

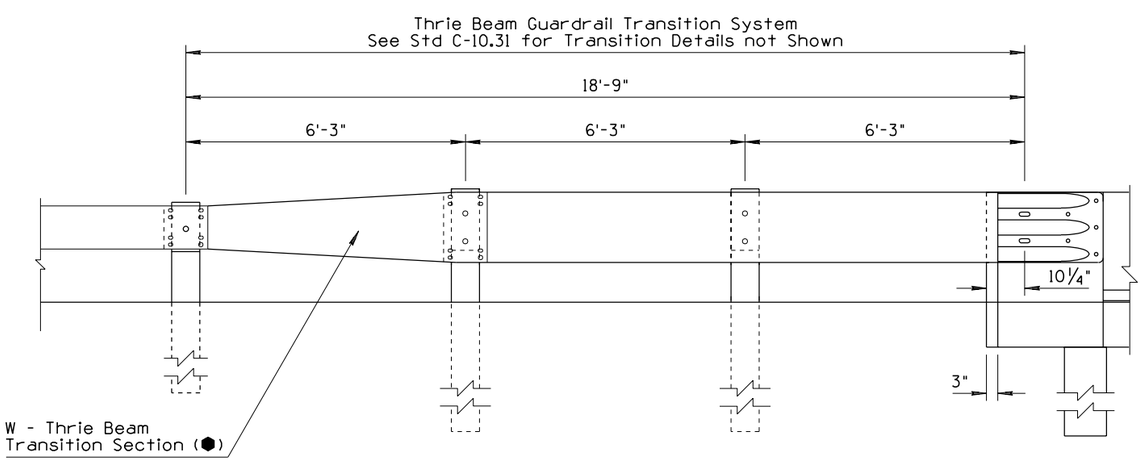

ELEVATION

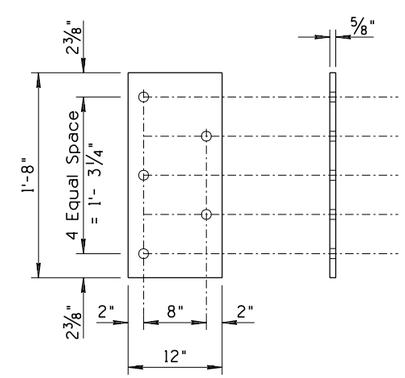

ANCHOR PLATE - DETAIL A

DESIGN APPROVED John L. Lewis	STATE OF ARIZONA DEPARTMENT OF TRANSPORTATION DIVISION OF HIGHWAYS STANDARD DRAWINGS	REV. 7/01
APPROVED FOR DISTRIBUTION Ronald C. Williams	GUARD RAIL TRANSITION W BEAM TO 'F' SHAPED CONCRETE HALF BARRIER 32" (DEPARTURE)	DRAWING NO. C-10.32

NO	DESCRIPTION OF REVISIONS	MADE BY	DATE
1	MODIFY LENGTH OF FOUNDATION TUBES	JNP	8/99
2	RAISED GUARD RAIL 1"	RLF	7/01
3			
4			

GENERAL NOTES

1. The cable assembly shall be tightened to remove slack.
2. To ensure that the bearing plate remains in position, one wrap of 14 gauge galvanized steel wire shall be wrapped around the terminal post near the top of the plate.
3. See Std. C-10.03 for measurement limits.

* See W-Beam End Section (Rounded), ARTBA Std. RE-6-79, for dimension variables.

⬡ - Indicates ARTBA designation

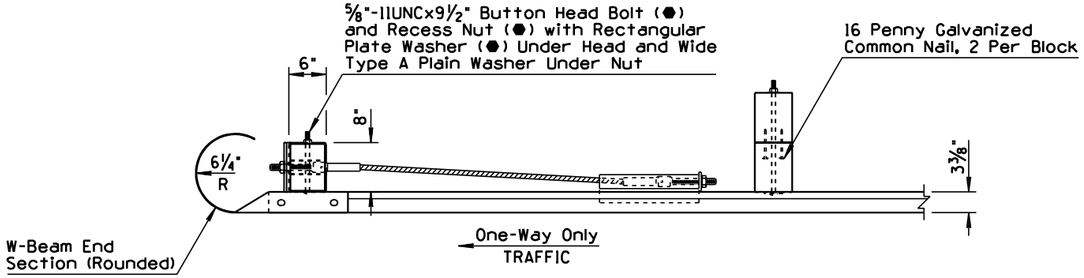

PLAN

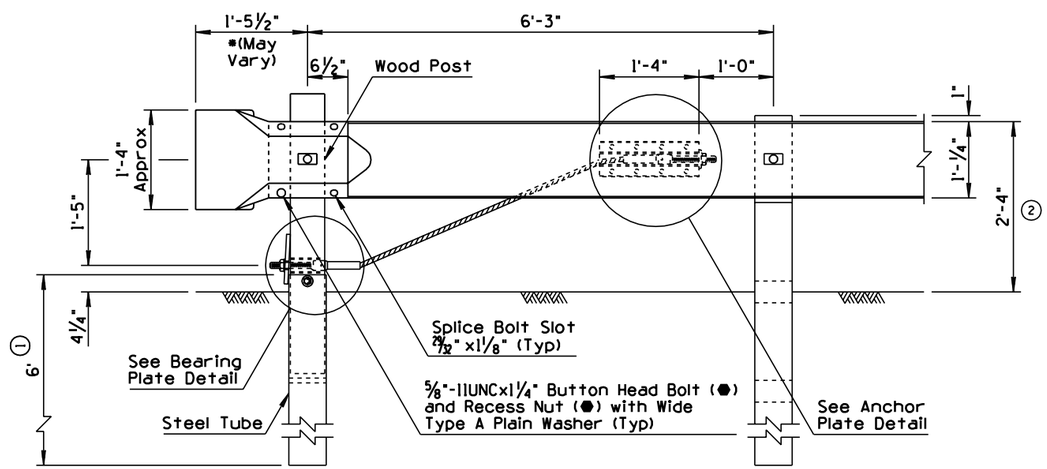

ELEVATION

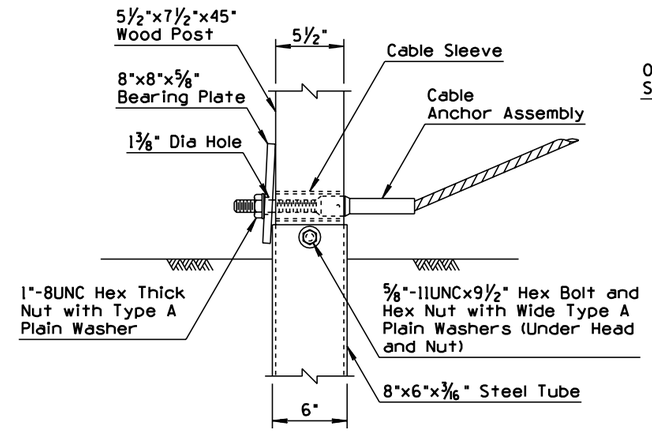

FRONT VIEW

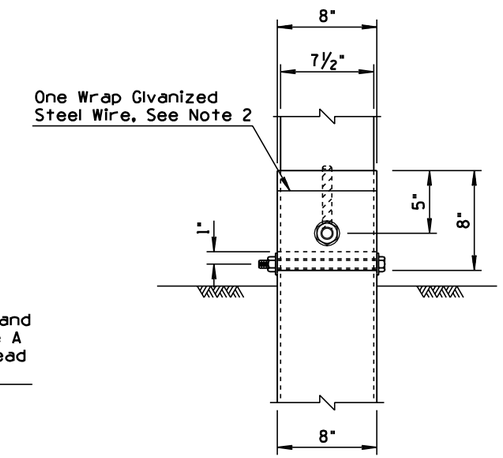

SIDE VIEW

BEARING PLATE DETAIL

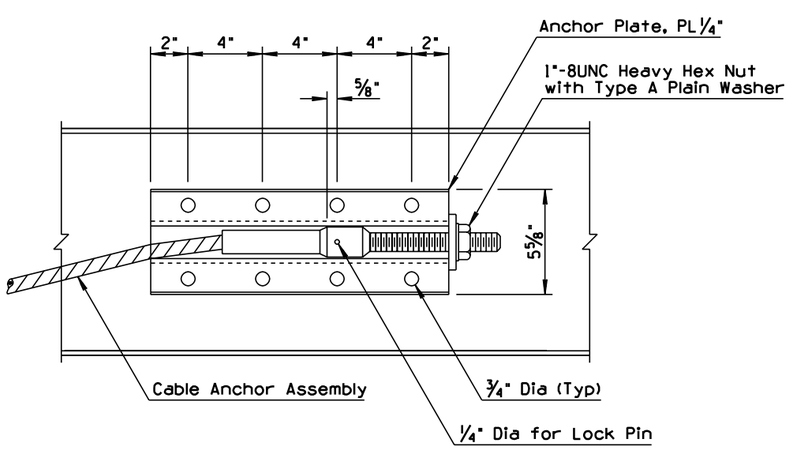

FRONT VIEW

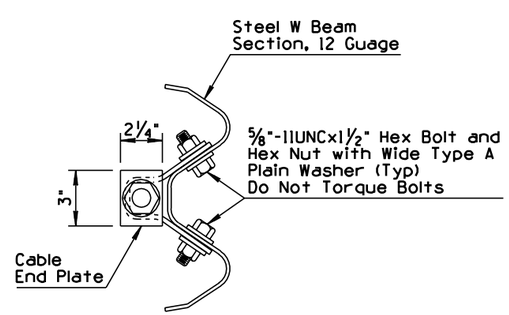

SIDE VIEW

ANCHOR PLATE DETAIL

DESIGN APPROVED	STATE OF ARIZONA DEPARTMENT OF TRANSPORTATION DIVISION OF HIGHWAYS STANDARD DRAWINGS	REV. 7/01
APPROVED FOR DISTRIBUTION	GUARD RAIL END TERMINAL ASSEMBLY	DRAWING NO. C-10.45

NO	DESCRIPTION OF REVISIONS	MADE BY	DATE
1	REVISED TO REFLECT 'F' SHAPE BARRIER	JNP	4/00
2			
3			
4			

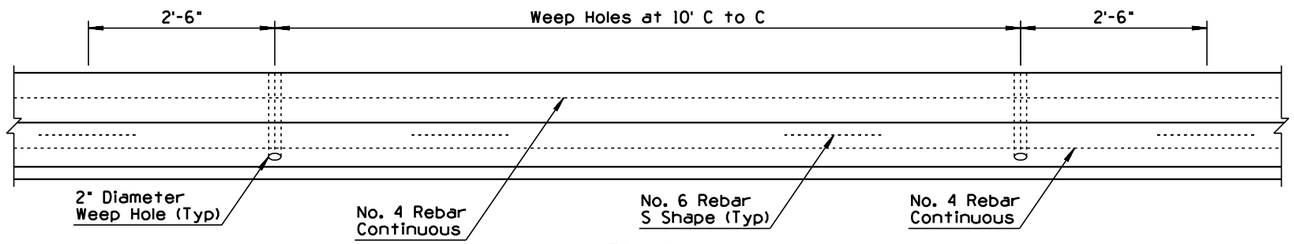

PLAN

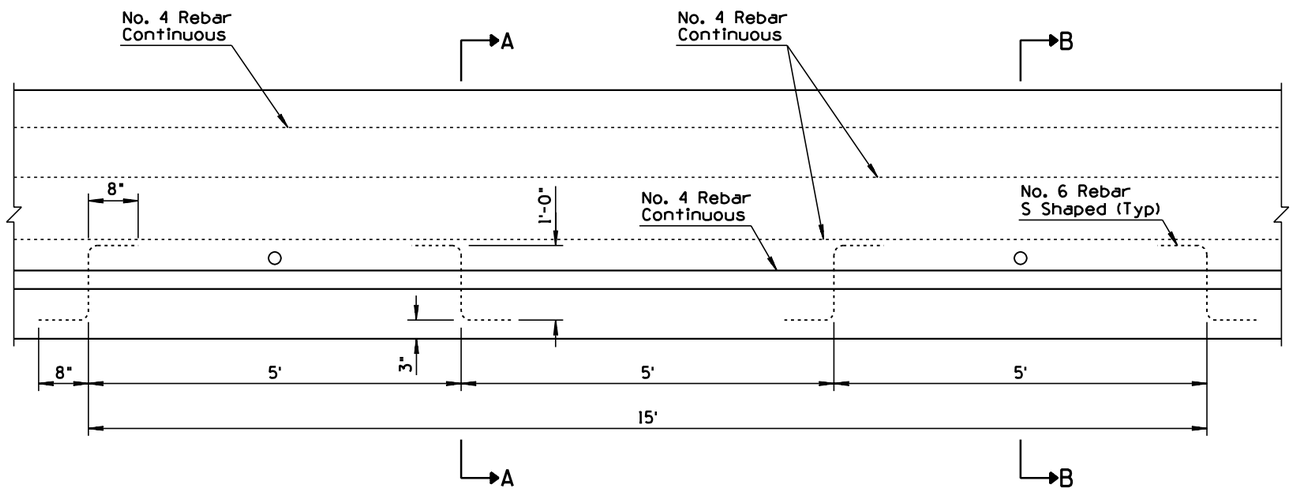

ELEVATION

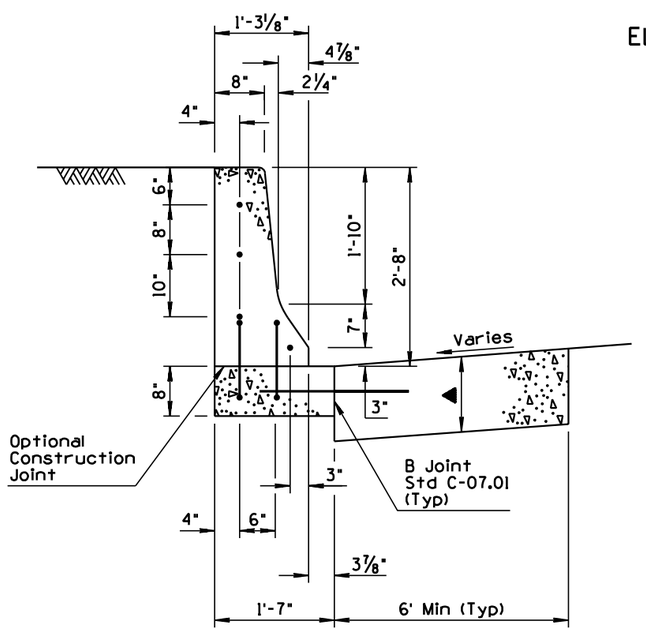

WITH PCC PAVEMENT
SECTION A-A

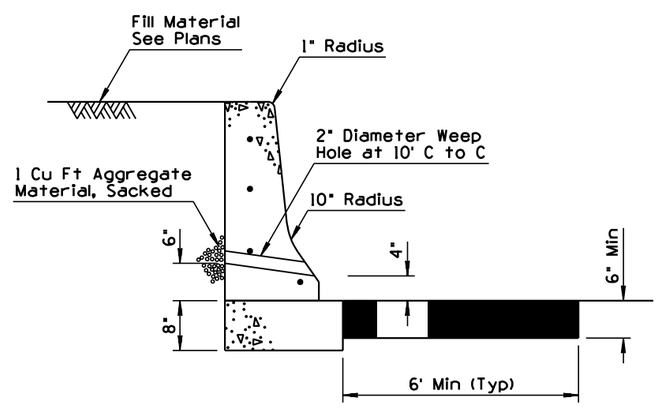

WITH AC PAVEMENT
SECTION B-B

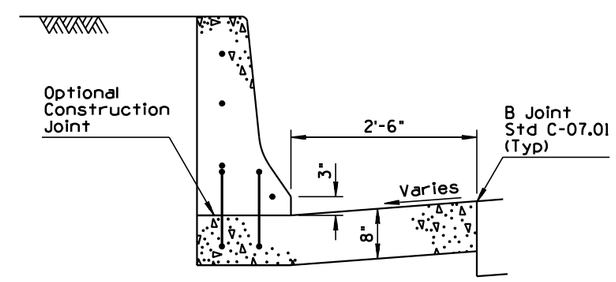

WITH PCC PAVEMENT
BARRIER WITH GUTTER

GENERAL NOTES

1. Half Barrier shall be constructed by the slip form or formed Cast-in-Place method.
2. When obstacles are encountered which prevent the use of slip form equipment, the closure shall be accomplished by the use of stationary forms.
3. Concrete shall be Class S, design strength f'_c =3000 PSI.
4. If the footing and barrier are cast monolithically, No. 6 S shaped rebars will not be required.
5. In no case shall the width of barrier exceed the width of the barrier footing or overhang the adjacent pavement.
6. No. 4 Rebar shall extend 12" past the construction joint at the completion of the day's pour.

▲ Depth to match adjacent PCCP thickness (8" Min).

DESIGN APPROVED: Terry H. Otterness	STATE OF ARIZONA DEPARTMENT OF TRANSPORTATION DIVISION OF HIGHWAYS STANDARD DRAWINGS	REV. 4/00
APPROVED FOR DISTRIBUTION: Ronald C. Williams	CONCRETE HALF BARRIER 32" TYPE 'F' CAST IN PLACE ① SLIP FORM & FIXED FORM	DRAWING NO. C-10.60

NO	DESCRIPTION OF REVISIONS	MADE BY	DATE
1	REVISED TO REFLECT 'F' SHAPE BARRIER	JNP	4/00
2			
3			
4			

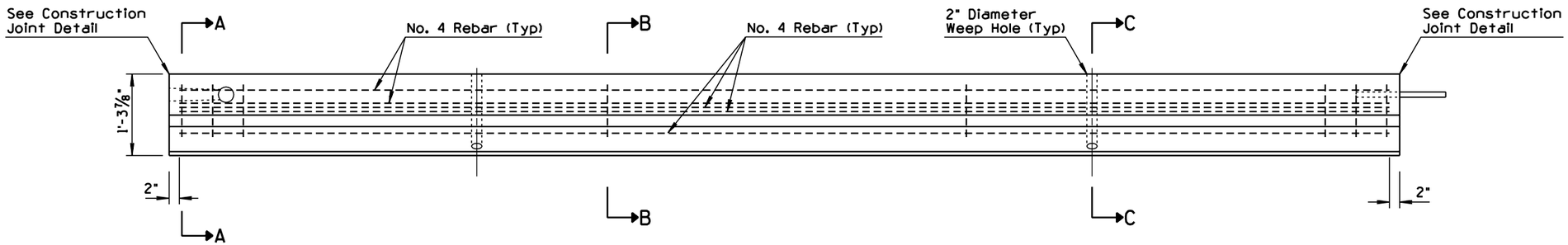

PLAN

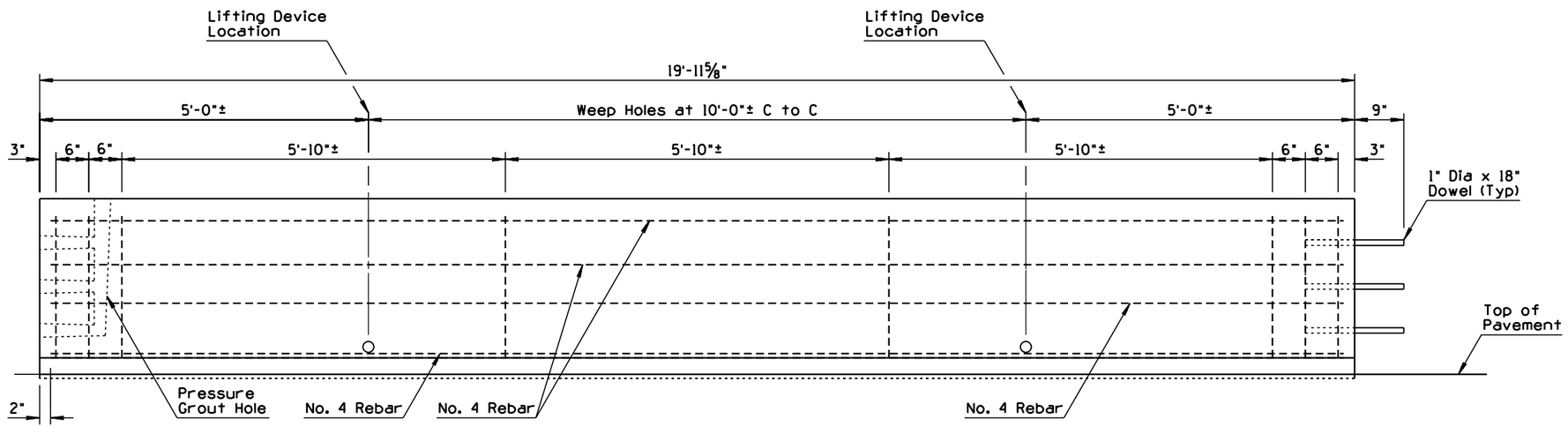

ELEVATION

GENERAL NOTES

1. Concrete shall be Class S, design strength f'_c =3000 PSI.
2. Half Barrier shall be placed upon either Asphaltic or Portland Cement Concrete Pavement.
3. Pavement thickness adjacent to Half Barrier shall be ¾" minimum.
4. The Half Barrier shall be placed upon a bed of grout in order to provide a uniform bearing.
5. Doweled joints shall be grouted under pressure until all of the openings and the joints are filled.
6. This standard shall not be used when an individual run consists of less than five 20 foot sections.
7. All bend dimensions for reinforcing steel shall be out-to-out of bars.

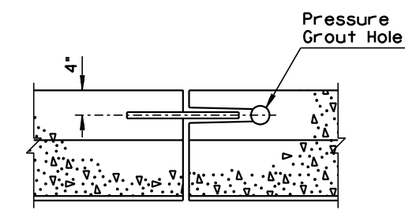

PLAN

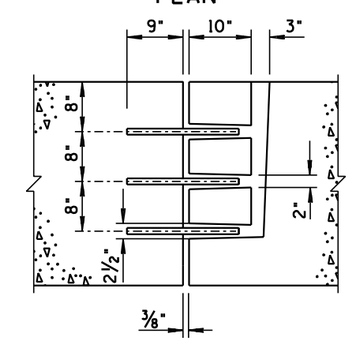

ELEVATION
CONSTRUCTION JOINT DETAIL

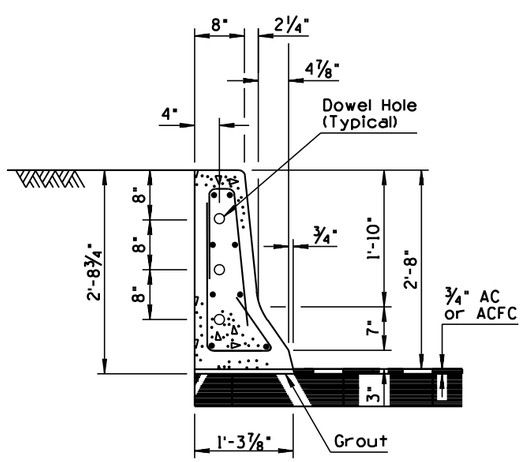

SECTION A-A

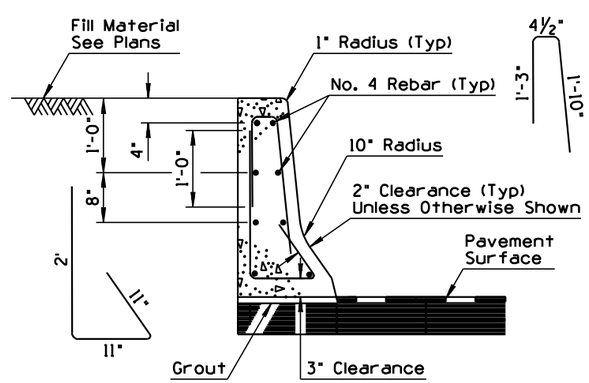

AT REBAR
SECTION B-B

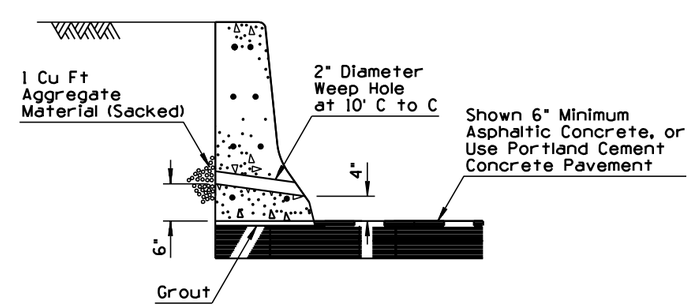

AT WEEP HOLE
SECTION C-C

DESIGN APPROVED Terry H. Otterness	STATE OF ARIZONA DEPARTMENT OF TRANSPORTATION DIVISION OF HIGHWAYS STANDARD DRAWINGS	REV. 4/00
APPROVED FOR DISTRIBUTION Ronald C. Williams	CONCRETE HALF BARRIER 32" TYPE 'F', PRECAST ①	DRAWING NO. C-10.61

NO	DESCRIPTION OF REVISIONS	MADE BY	DATE
1	NEW STANDARD DEVELOPED	JNP	4/00
2			
3			
4			

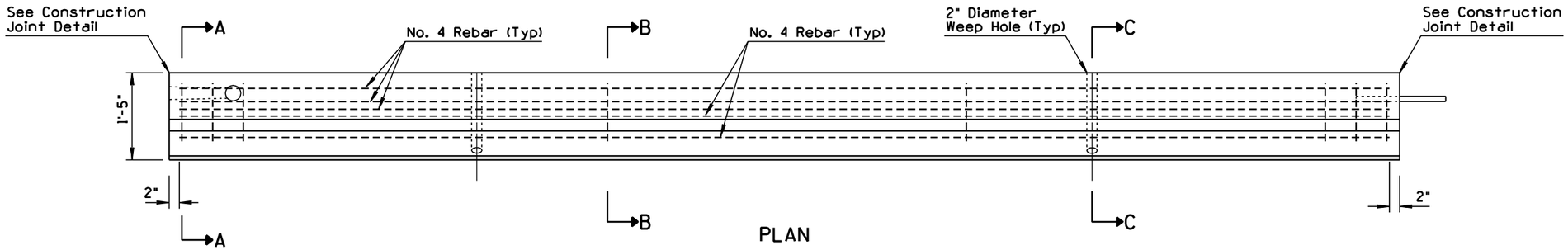

PLAN

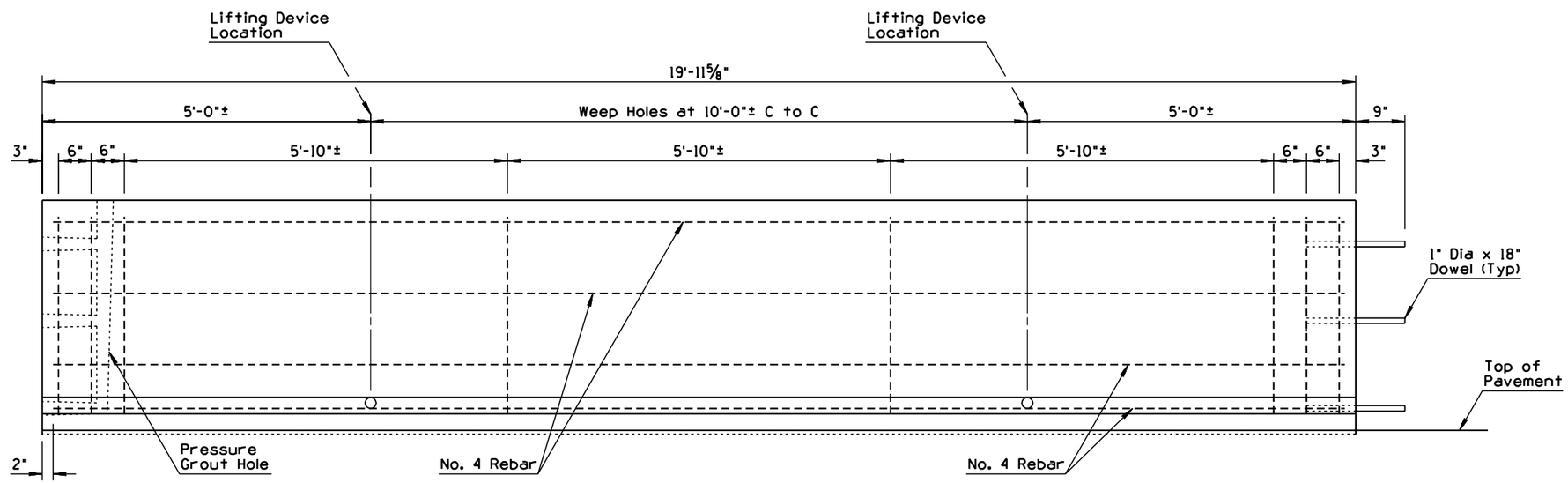

ELEVATION

GENERAL NOTES

1. Concrete shall be Class S, design strength f'_c =3000 PSI.
2. Half Barrier shall be placed upon either Asphaltic or Portland Cement Concrete Pavement.
3. Pavement thickness adjacent to Half Barrier shall be ¾" minimum.
4. The Half Barrier shall be placed upon a bed of grout in order to provide a uniform bearing.
5. Doweled joints shall be grouted under pressure until all of the openings and the joints are filled.
6. This standard shall not be used when an individual run consists of less than five 20 foot sections.
7. All bend dimensions for reinforcing steel shall be out-to-out of bars.

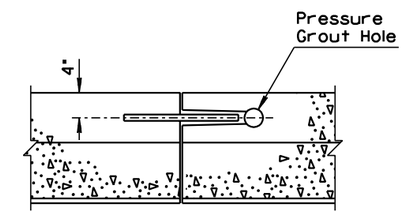

PLAN

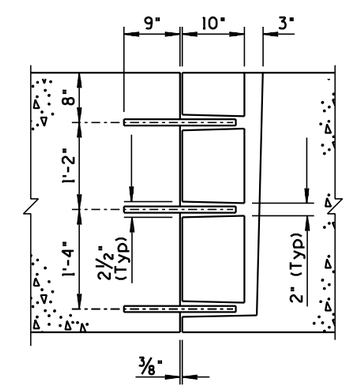

ELEVATION
CONSTRUCTION JOINT DETAIL

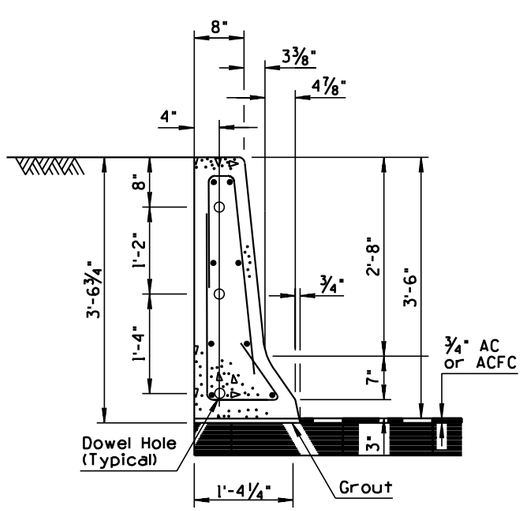

SECTION A-A

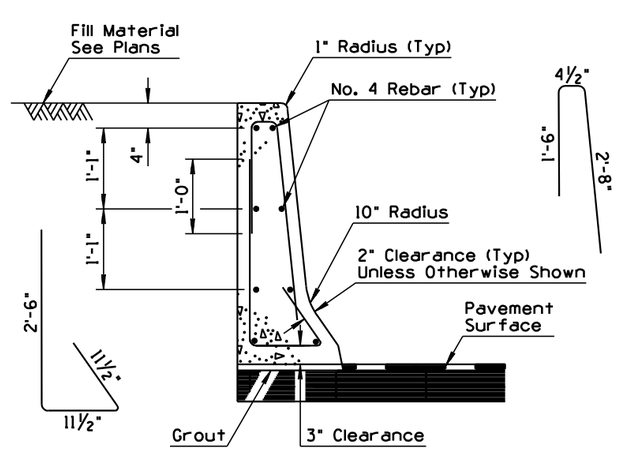

AT REBAR
SECTION B-B

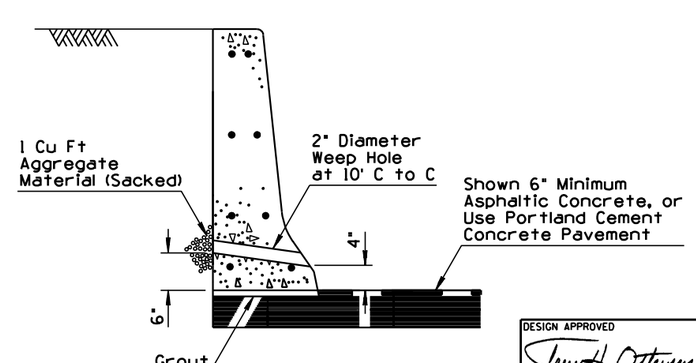

AT WEEP HOLE
SECTION C-C

DESIGN APPROVED Terry H. Otterness	STATE OF ARIZONA DEPARTMENT OF TRANSPORTATION DIVISION OF HIGHWAYS STANDARD DRAWINGS	REV. 4/00
APPROVED FOR DISTRIBUTION Ronald C. Williams	CONCRETE HALF BARRIER 42" TYPE 'F', PRECAST ①	DRAWING NO. C-10.61a

NO	DESCRIPTION OF REVISIONS	MADE BY	DATE
1	ADDED NOTE	JNP	4/00
2	REVISED NOTE	RLF	7/01
3	ADDED DETAIL	RLF	7/01
4			

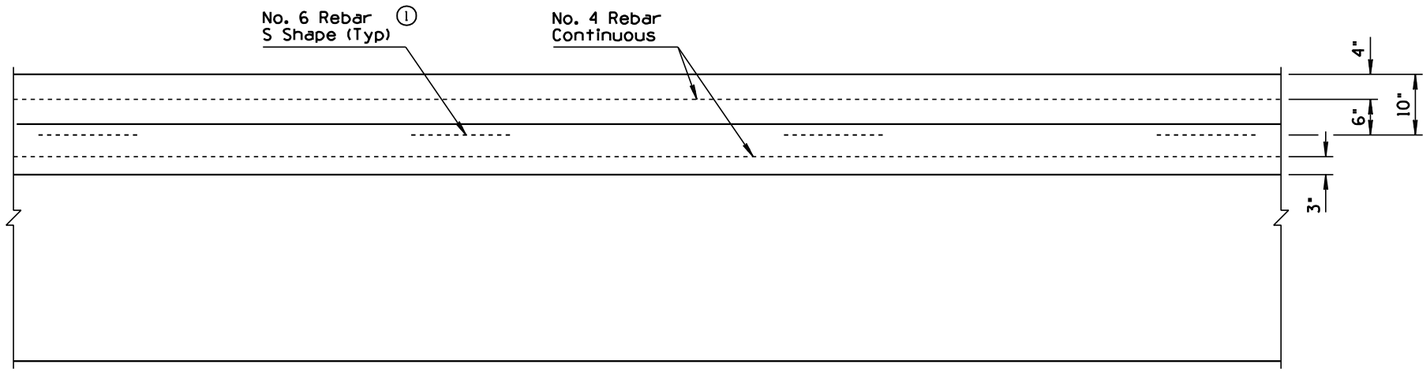

PLAN

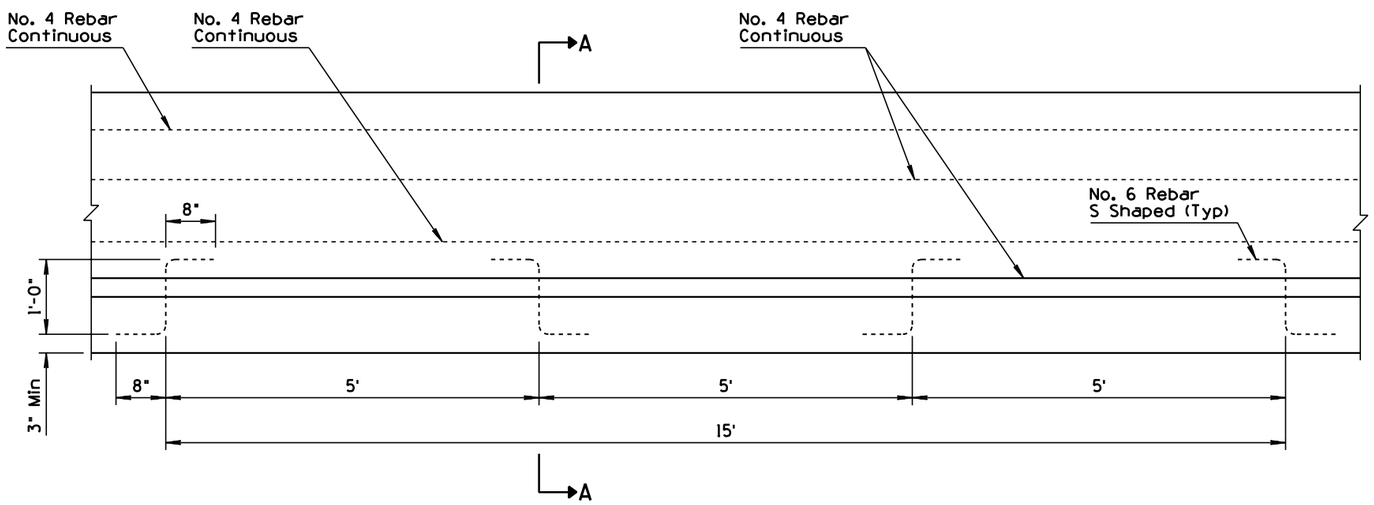

ELEVATION

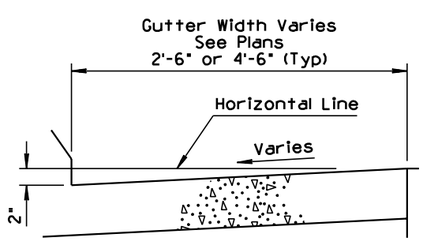

BARRIER GUTTER DETAIL

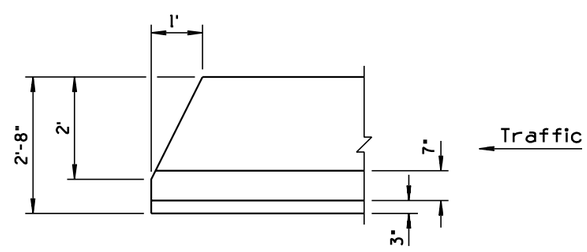

ELEVATION
DEPARTURE TERMINATION WITHOUT GUARD RAIL
3

GENERAL NOTES

1. Half Barrier shall be constructed by the slip form or formed Cast-in-Place method.
2. When obstacles are encountered which prevents the use of slip form equipment, the closure shall be accomplished by the use of stationary forms.
3. Concrete shall be Class S, design strength f'_c =3000 PSI.
4. No. 4 Rebar shall extend 12" past the construction joint at the completion of the day's pour.
5. Thickness of footing, "D" can be adjusted to match the PCCP thickness, as approved by the Engineer.
6. When the pavement section slopes away from the gutter, the slope of the gutter shall match the pavement cross slope. Therefore, the 2" gutter depression is not applicable.
7. When bridges are encountered, the cross slope of the gutter shall be transitioned to match the cross slope of the bridge. Length of the transition is 15 feet.
8. 2 Two inch deep contraction joints shall be placed in the gutter at locations which match the joints in adjacent Portland cement concrete pavement. Joints shall be either hand tooled or sawed.

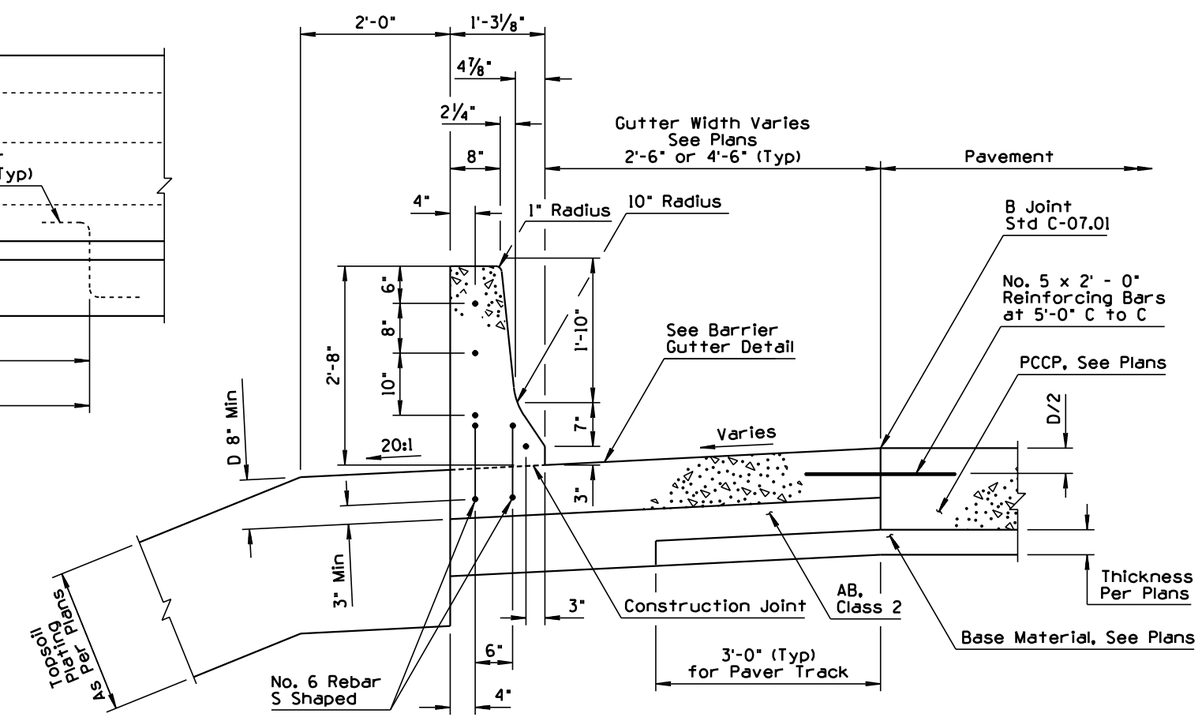

SECTION A-A

DESIGN APPROVED John L. Laue	STATE OF ARIZONA DEPARTMENT OF TRANSPORTATION DIVISION OF HIGHWAYS STANDARD DRAWINGS	REV. 7/01
APPROVED FOR DISTRIBUTION Ronald C. Williams	CONCRETE HALF BARRIER 32" TYPE 'F' WITH GUTTER	DRAWING NO. C-10.62

NO	DESCRIPTION OF REVISIONS	MADE BY	DATE
1	NEW STANDARD DEVELOPED	JNP	8/99
2	REVISED NOTE	RLF	7/01
3	ADDED DETAIL	RLF	7/01
4			

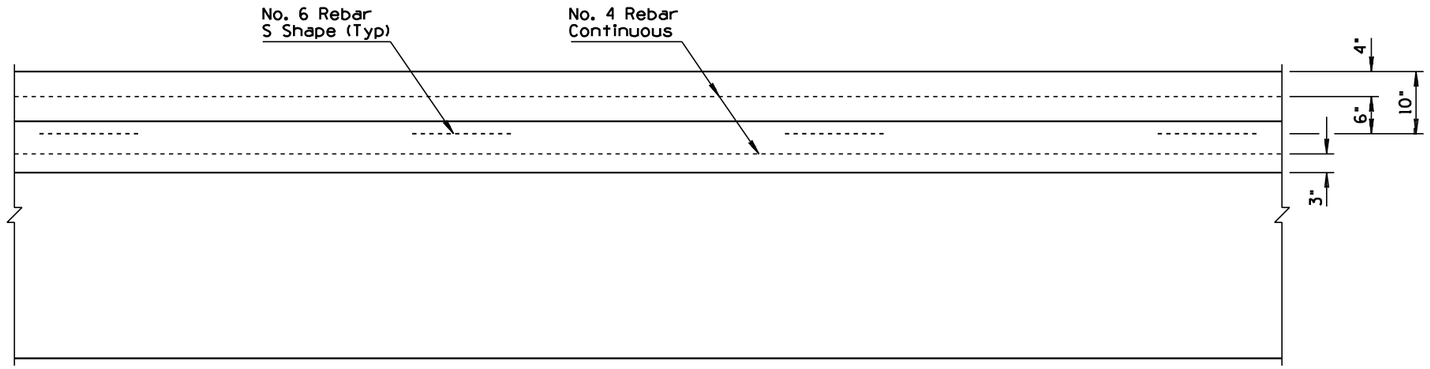

PLAN

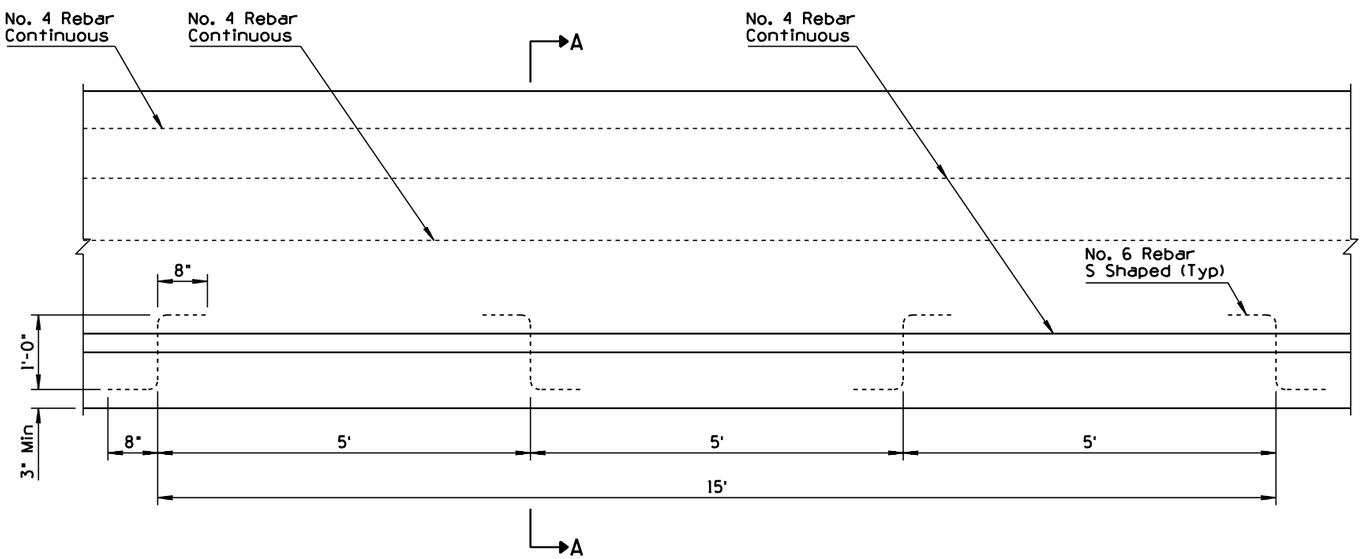

ELEVATION

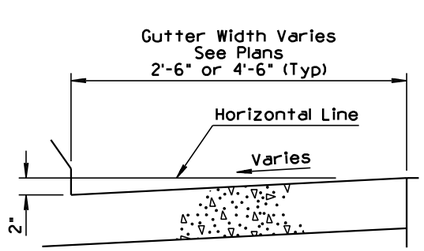

BARRIER GUTTER DETAIL

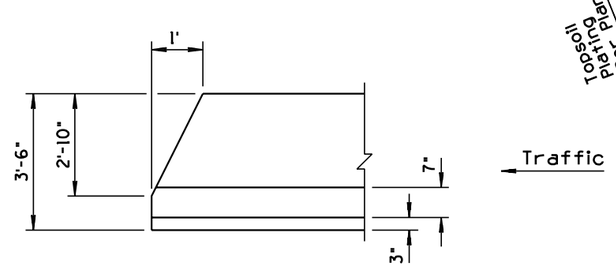

ELEVATION
DEPARTURE TERMINATION WITHOUT GUARD RAIL
③

GENERAL NOTES

1. Half Barrier shall be constructed by the slip form or formed Cast-In-Place method.
2. When obstacles are encountered which prevents the use of slip form equipment, the closure shall be accomplished by the use of stationary forms.
3. Concrete shall be Class S, design strength f'_c =3000 PSI.
4. No. 4 Rebar shall extend 12" past the construction joint at the completion of the ay's pour.
5. Thickness of footing, "D" can be adjusted to match the PCCP thickness, as approved by the Engineer.
6. When the pavement section slopes away from the gutter, the slope of the gutter shall match the pavement cross slope. Therefore, the 2" gutter depression is not applicable.
7. When bridges are encountered, the cross slope of the gutter shall be transitioned to match the cross slope of the bridge. Length of the transition is 15 feet.
8. ② Two inch deep contraction joints shall be placed in the gutter at locations which match the joints in adjacent portland cement concrete pavement. Joints shall be either hand tooled or sawed.

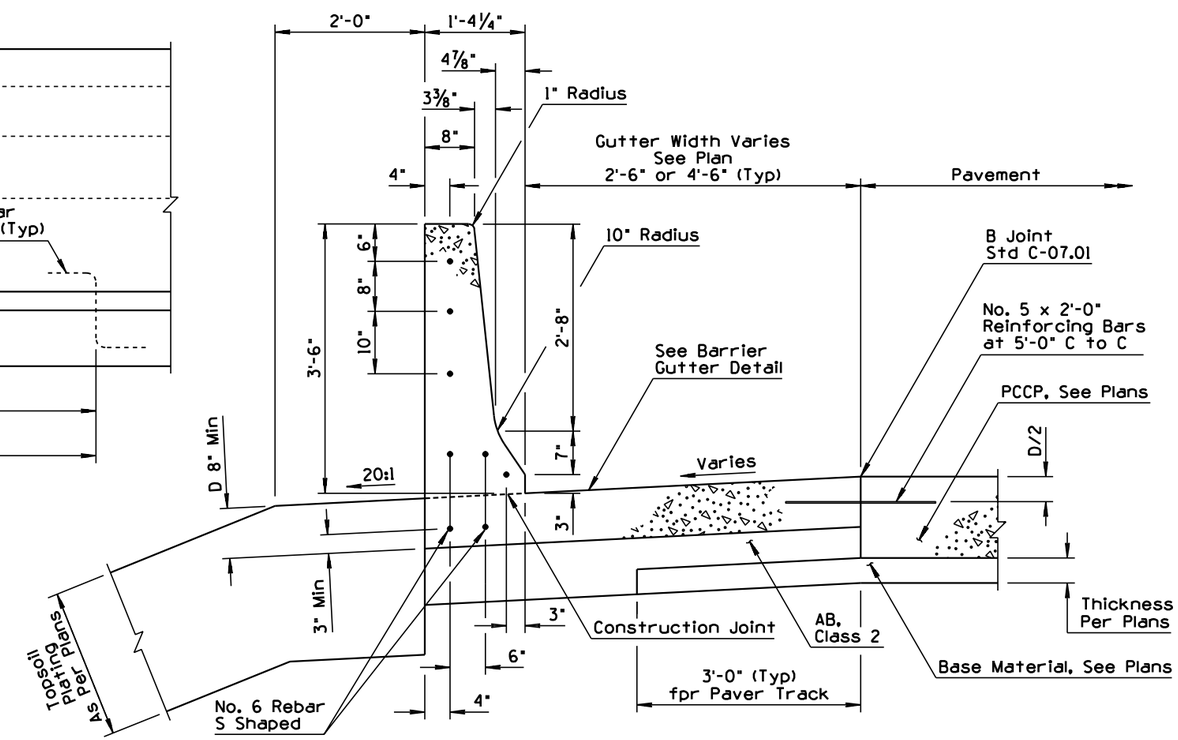

SECTION A-A

DESIGN APPROVED John L Lawis	STATE OF ARIZONA DEPARTMENT OF TRANSPORTATION DIVISION OF HIGHWAYS STANDARD DRAWINGS	REV. 7/01
APPROVED FOR DISTRIBUTION Ronald C Williams	CONCRETE HALF BARRIER 42" TYPE 'F' WITH GUTTER ①	DRAWING NO. C-10.63

NO	DESCRIPTION OF REVISIONS	MADE BY	DATE
1	REVISED TO REFLECT 'F' SHAPE BARRIER	JNP	4/00
2			
3			
4			

GENERAL NOTES

1. Concrete shall be Class S, design strength f'_c =3000 PSI.
2. If the footing and barrier are cast monolithically, No. 6 S shaped rebars will not be required.
3. In no case shall the width of barrier exceed the width of the barrier footing or overhang the adjacent pavement.
4. No. 4 Rebar shall extend 12" past the construction joint at the completion of the day's pour.

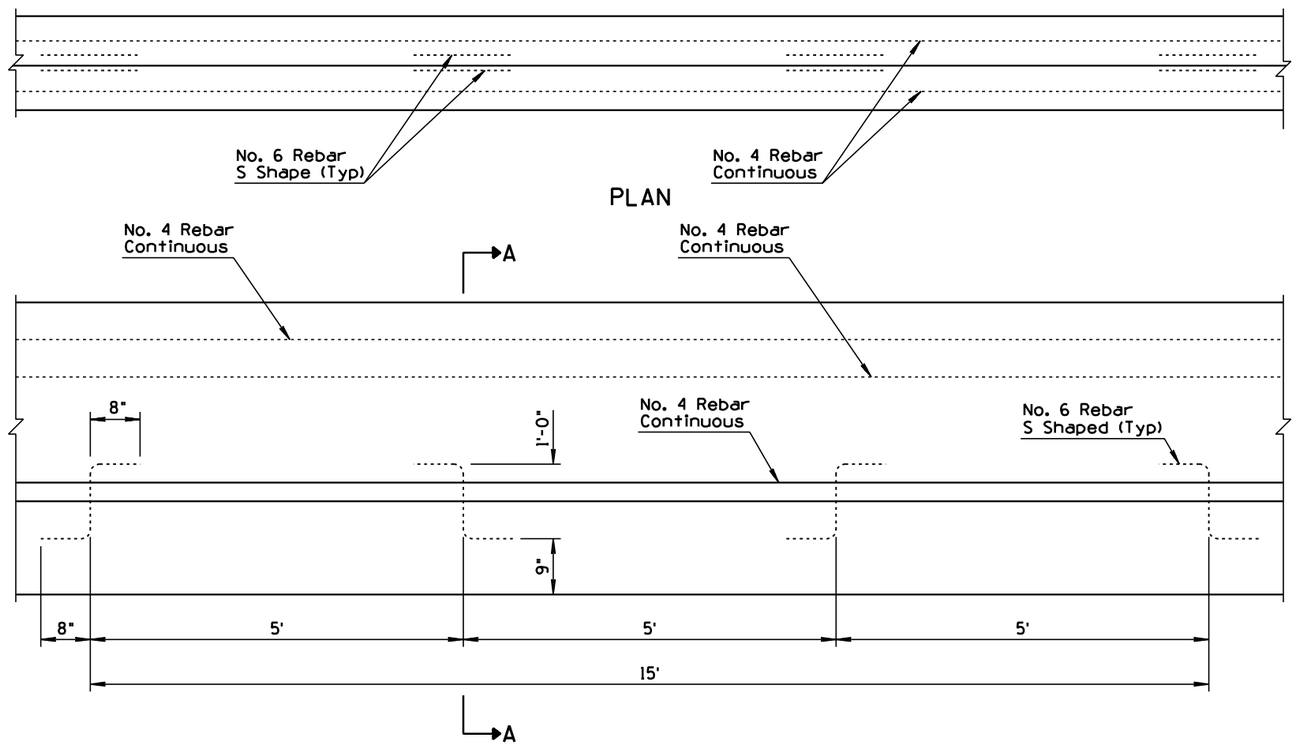

ELEVATION

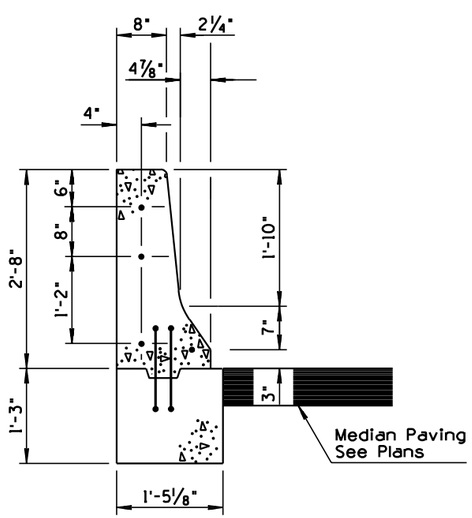

WITH AC
SECTION A-A

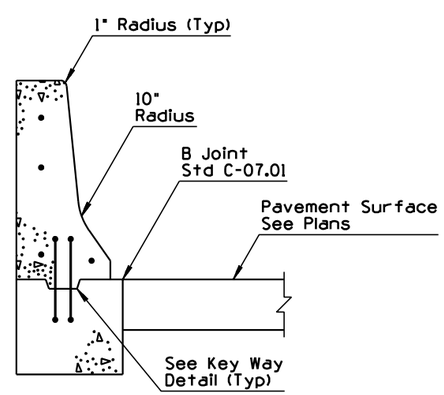

WITH PCCP
SECTION A-A

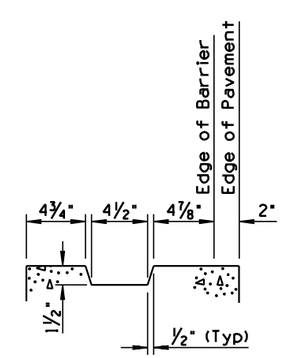

KEY WAY DETAIL

DESIGN APPROVED Terry H. Otterness	STATE OF ARIZONA DEPARTMENT OF TRANSPORTATION DIVISION OF HIGHWAYS STANDARD DRAWINGS	REV. 4/00
APPROVED FOR DISTRIBUTION Ronald C. Williams	CONCRETE HALF BARRIER (AT PIERS) 32" TYPE 'F' CAST IN PLACE, FIXED FORM (1)	DRAWING NO. C-10.64 Sheet 1 of 2

NO	DESCRIPTION OF REVISIONS	MADE BY	DATE
1	NEW STANDARD DEVELOPED	JNP	4/00
2			
3			
4			

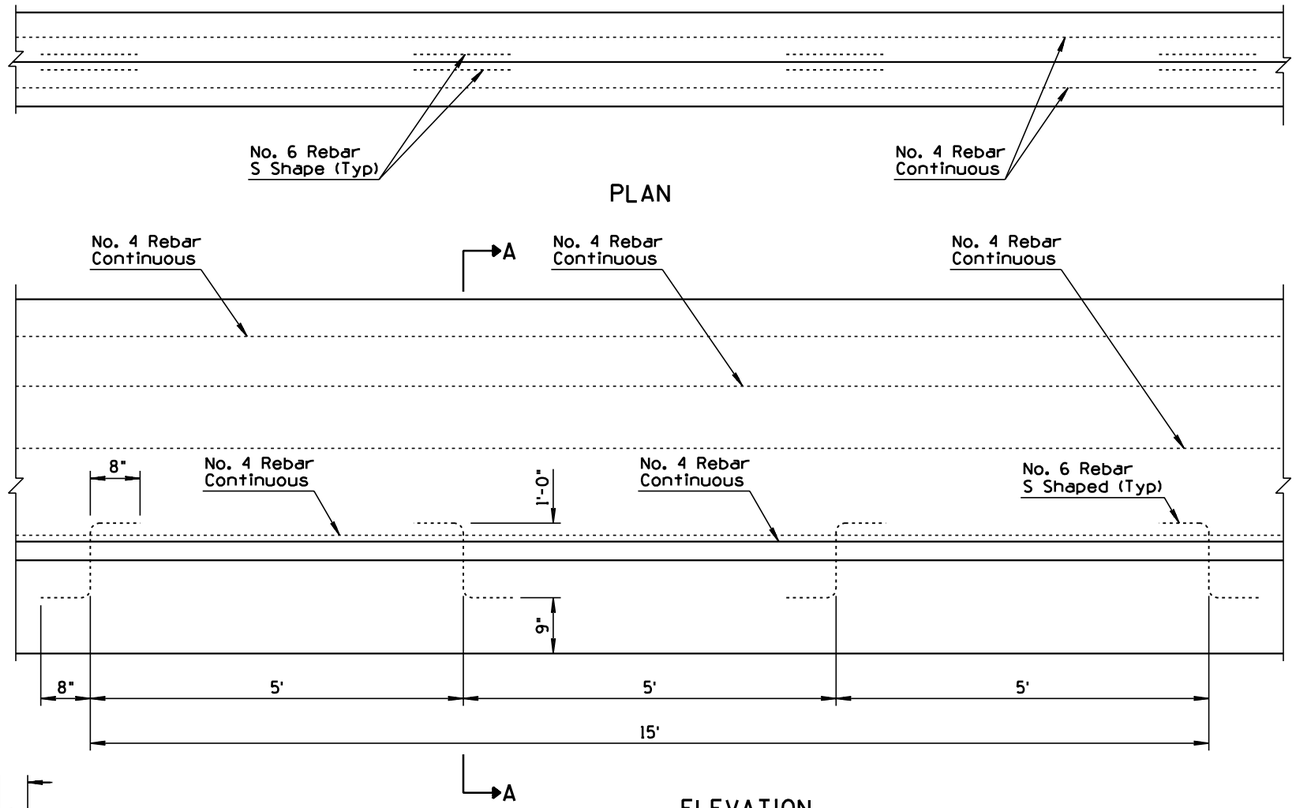

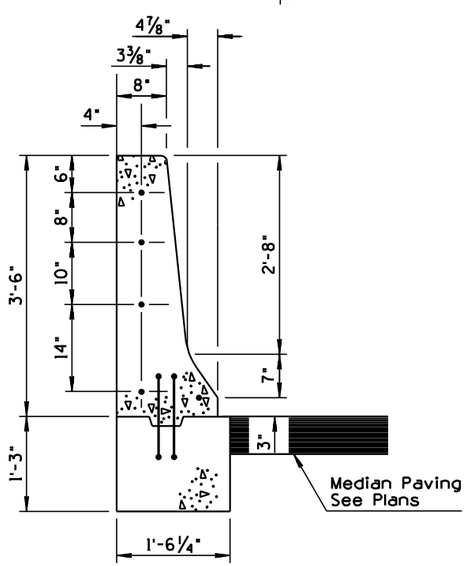

WITH AC
SECTION A-A

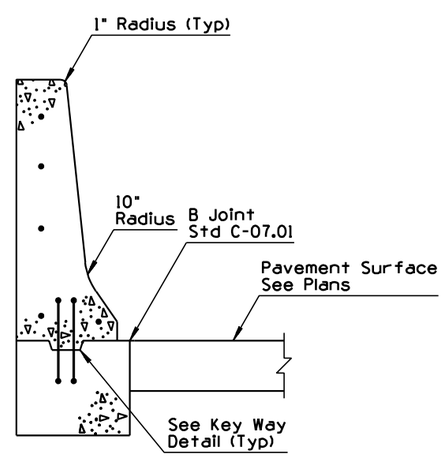

WITH PCCP
SECTION A-A

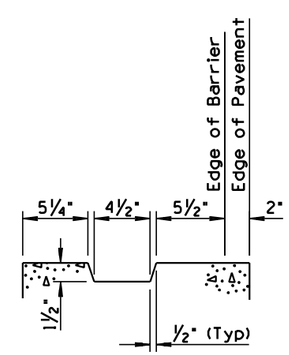

KEY WAY DETAIL

GENERAL NOTES

1. Concrete shall be Class S, design strength f'_c =3000 PSI.
2. If the footing and barrier are cast monolithically, No. 6 S shaped rebars will not be required.
3. In no case shall the width of barrier exceed the width of the barrier footing or overhang the adjacent pavement.
4. No. 4 Rebar shall extend 12" past the construction joint at the completion of the day's pour.

DESIGN APPROVED Terry H. Otterness	STATE OF ARIZONA DEPARTMENT OF TRANSPORTATION DIVISION OF HIGHWAYS STANDARD DRAWINGS	REV. 4/00
APPROVED FOR DISTRIBUTION Ronald C. Williams	CONCRETE HALF BARRIER (AT PIERS) 42" TYPE 'F' CAST IN PLACE, FIXED FORM (1)	DRAWING NO. C-10.64a Sheet 1 of 2

NO	DESCRIPTION OF REVISIONS	MADE BY	DATE
1	REVISED TO REFLECT 'F' SHAPE BARRIER	JNP	4/00
2			
3			
4			

GENERAL NOTES

1. Concrete shall be Class S, design strength f'_c =4000 PSI.
2. The Half Barrier shall be placed upon a bed of grout in order to provide a uniform bearing.
3. Doweled joints shall be grouted under pressure until all of the openings and the joints are filled.
4. This standard shall not be used when an individual run consists of less than five 20 foot sections.
5. All bend dimensions for reinforcing steel shall be out-to-out of bars.

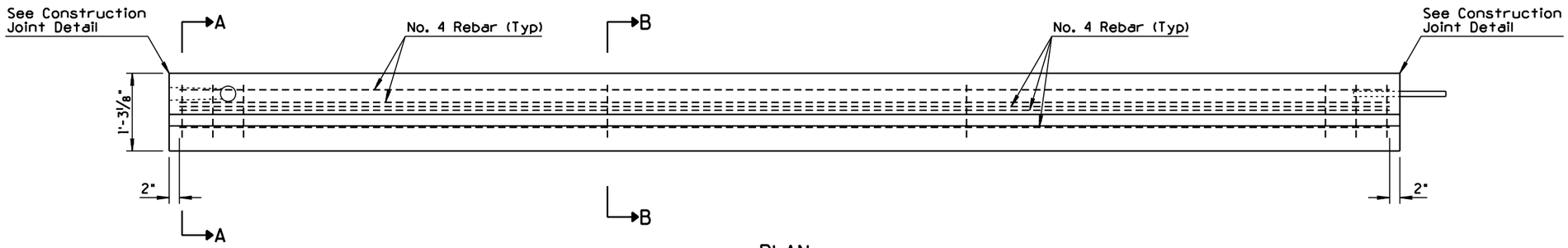

PLAN

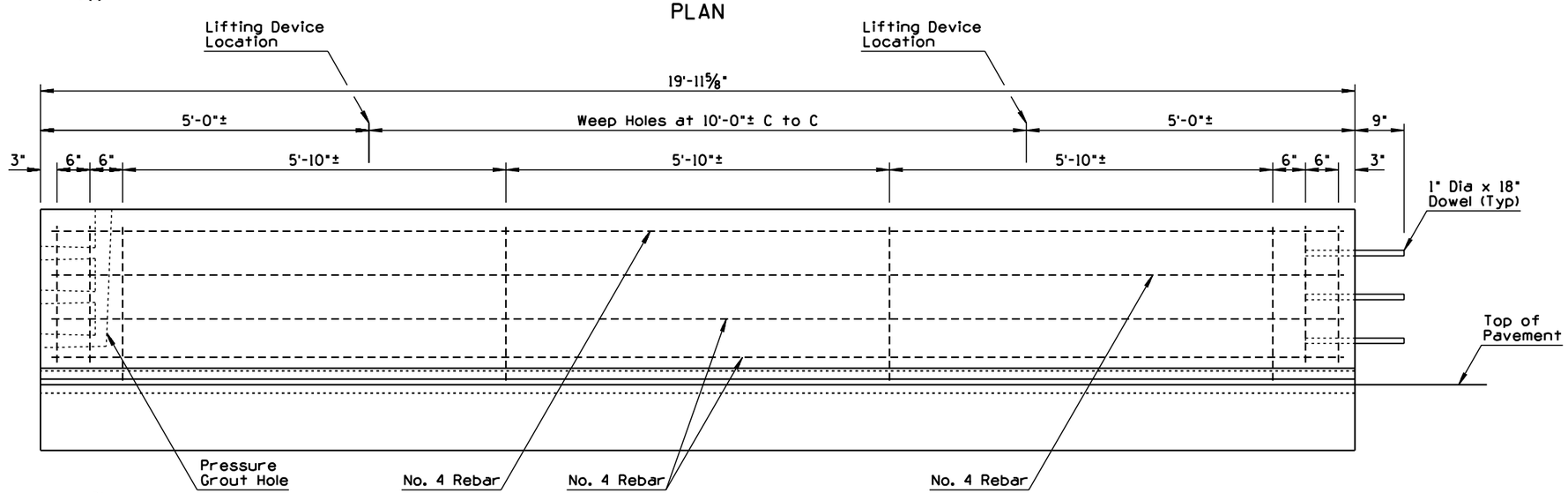

ELEVATION

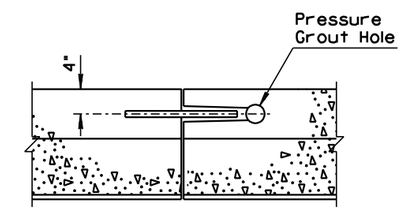

PLAN

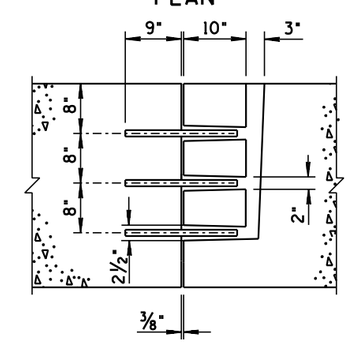

ELEVATION
CONSTRUCTION JOINT DETAIL

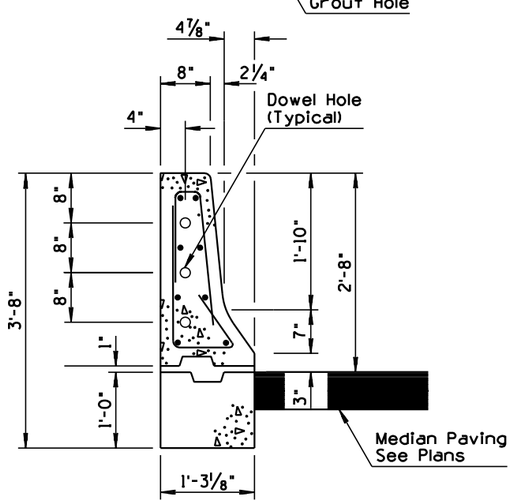

WITH AC
SECTION A-A

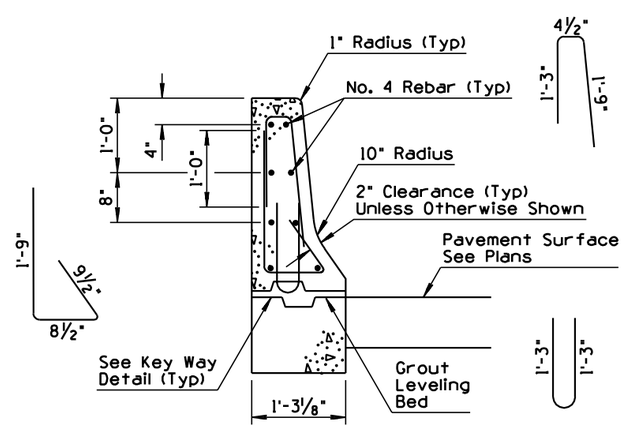

AT REBAR - WITH PCCP
SECTION B-B

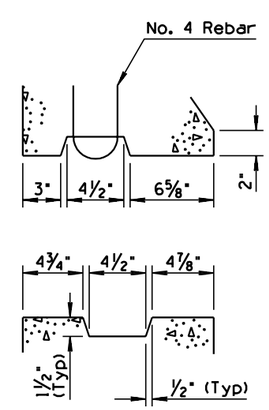

KEY WAY DETAIL

DESIGN APPROVED Terry H. Otterness	STATE OF ARIZONA DEPARTMENT OF TRANSPORTATION DIVISION OF HIGHWAYS STANDARD DRAWINGS	REV. 4/00
APPROVED FOR DISTRIBUTION Ronald C. Williams	CONCRETE HALF BARRIER (AT PIERS) 32" TYPE 'F' PRECAST (1)	DRAWING NO. C-10.64 Sheet 2 of 2

NO	DESCRIPTION OF REVISIONS	MADE BY	DATE
1	NEW STANDARD DEVELOPED	JNP	4/00
2			
3			
4			

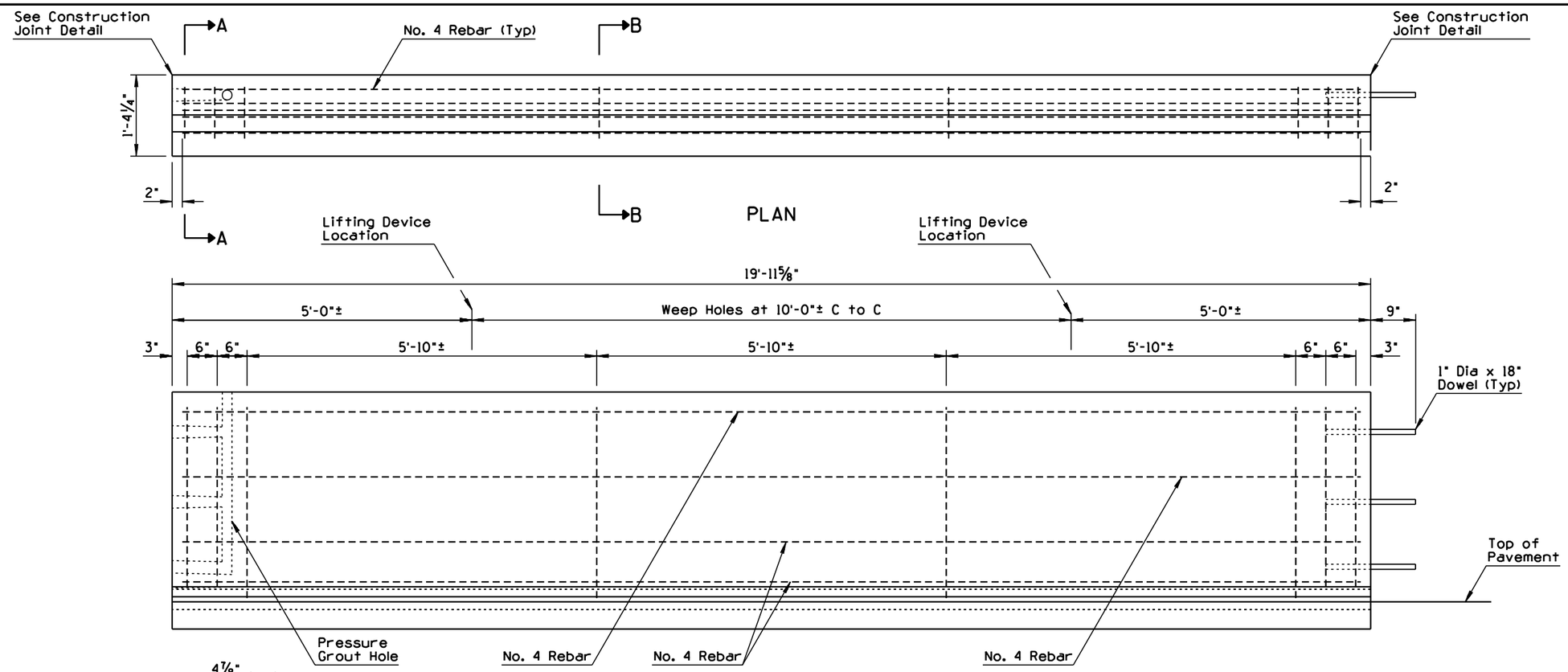

GENERAL NOTES

1. Concrete shall be Class S, design strength f'_c =4000 PSI.
2. The Half Barrier shall be placed upon a bed of grout in order to provide a uniform bearing.
3. Doweled joints shall be grouted under pressure until all of the openings and the joints are filled.
4. This standard shall not be used when an individual run consists of less than five 20 foot sections.
5. All bend dimensions for reinforcing steel shall be out-to-out of bars.

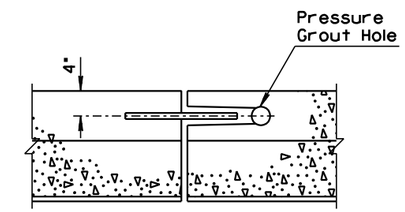

PLAN

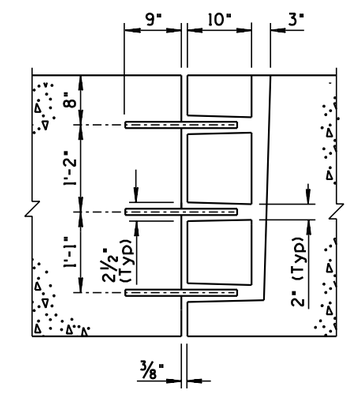

ELEVATION
CONSTRUCTION JOINT DETAIL

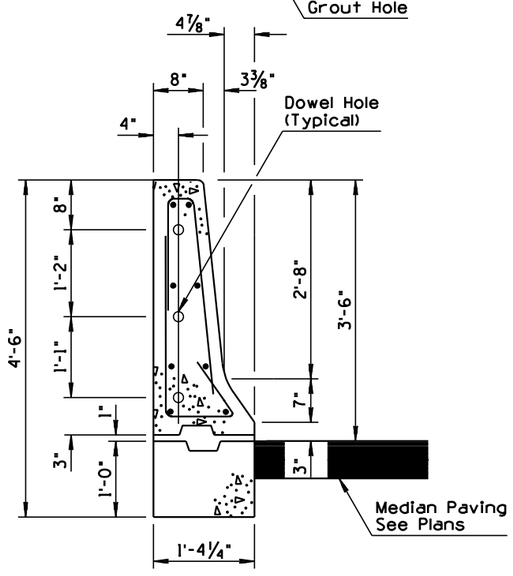

WITH AC
SECTION A-A

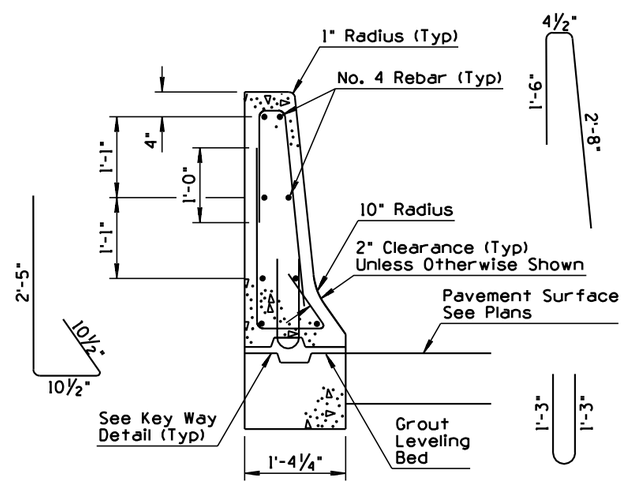

AT REBAR - WITH PCCP
SECTION B-B

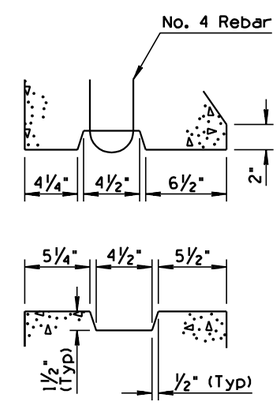

KEY WAY DETAIL

DESIGN APPROVED Terry H. Otterness	STATE OF ARIZONA DEPARTMENT OF TRANSPORTATION DIVISION OF HIGHWAYS STANDARD DRAWINGS	REV. 4/00
APPROVED FOR DISTRIBUTION Ronald C. Williams	CONCRETE HALF BARRIER (AT PIERS) 42" TYPE 'F' PRECAST ①	DRAWING NO. C-10.64a Sheet 2 of 2

NO	DESCRIPTION OF REVISIONS	MADE BY	DATE
1	REVISED TO REFLECT 'F' SHAPE	JNP	4/00
2	DELETED ORIGINAL NOTE #4	RLF	7/01
3			
4			

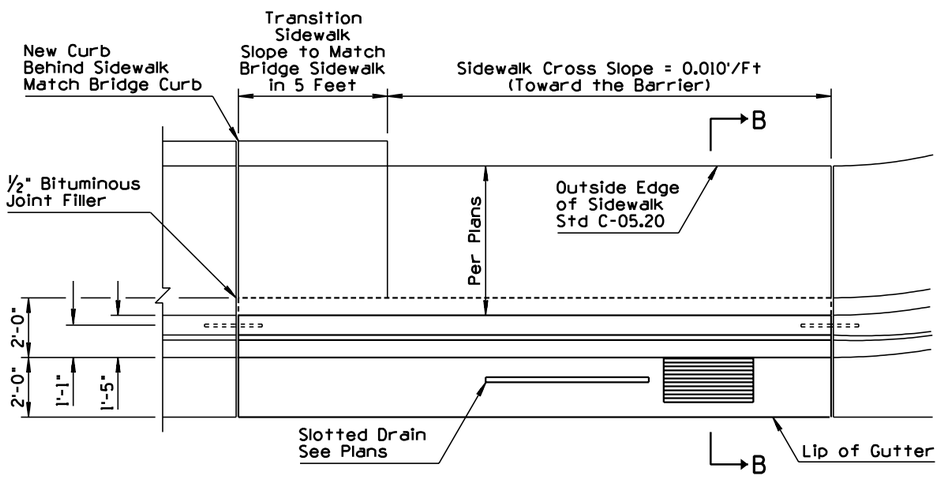

PLAN VIEW

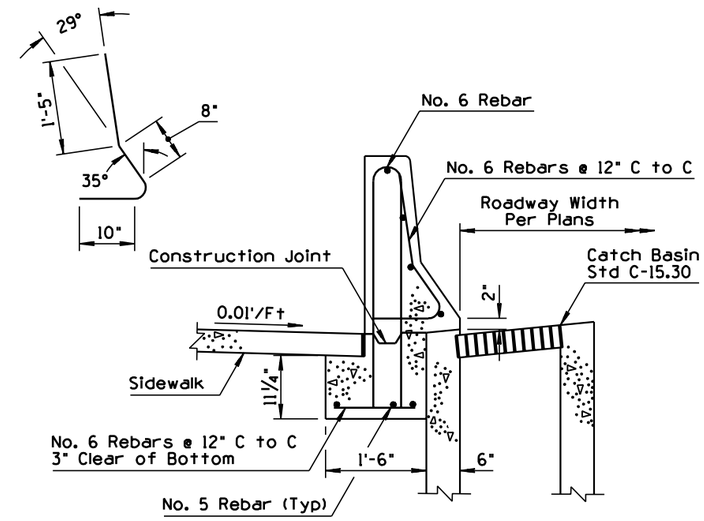

SECTION B-B
AT CATCH BASINS

GENERAL NOTES

1. All concrete shall be Class "S" (f'c = 3000 psi).
2. All reinforcing steel shall conform to Section 1003.
3. All reinforcing steel shall have 2" minimum clear cover unless otherwise noted.
4. (2) See drainage sheets for slotted drain and catch basin details.
5. Departure termination may be substituted for the C-10.76 barrier transition under departure conditions.
6. See Std. C-05.20 for sidewalk construction.
7. All bend dimensions for reinforcing steel shall be out-to-out of bars.

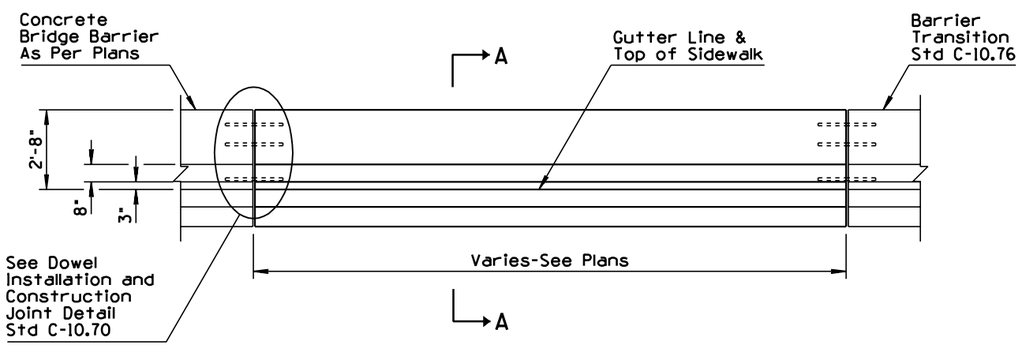

ELEVATION

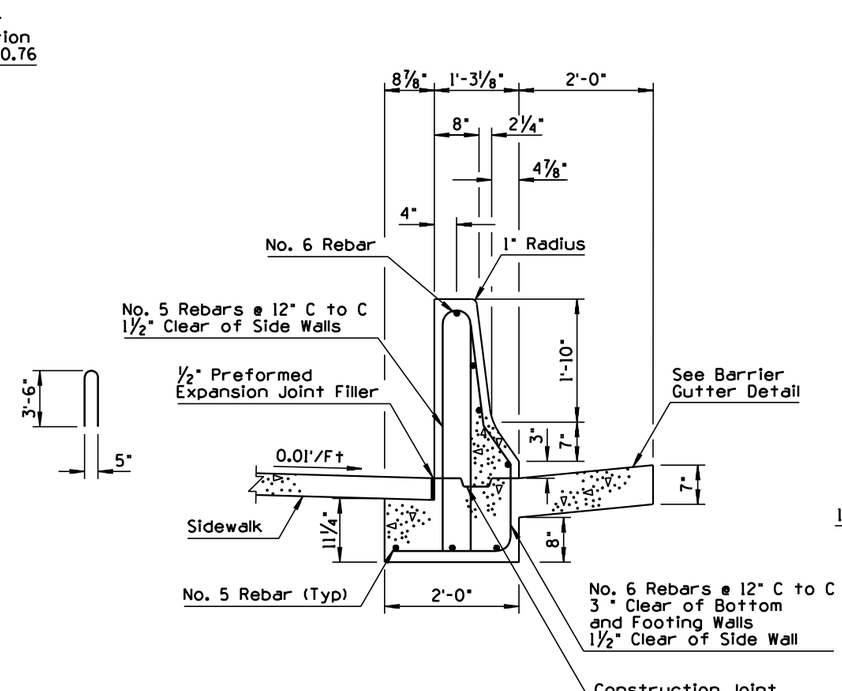

SECTION A-A

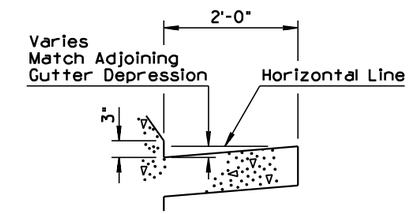

BARRIER GUTTER DETAIL

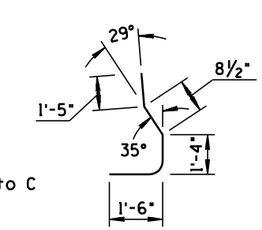

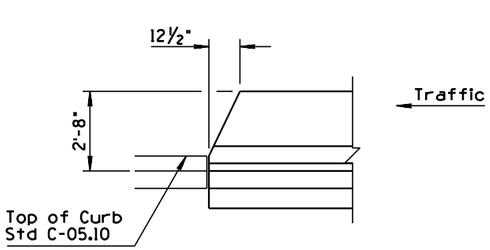

ELEVATION
DEPARTURE TERMINATION DETAIL

DESIGN APPROVED John L. Lewis	STATE OF ARIZONA DEPARTMENT OF TRANSPORTATION DIVISION OF HIGHWAYS STANDARD DRAWINGS	REV. 7/01
APPROVED FOR DISTRIBUTION Ronald C. Williams	CONCRETE HALF BARRIER 32" (1) WITH SIDEWALK	DRAWING NO. C-10.65

NO	DESCRIPTION OF REVISIONS	MADE BY	DATE
1	REVISED TO REFLECT 'F' SHAPE	JNP	4/00
2			
3			
4			

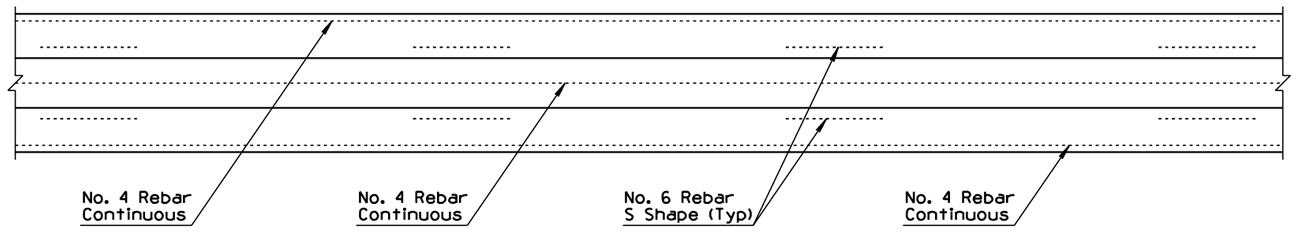

PLAN

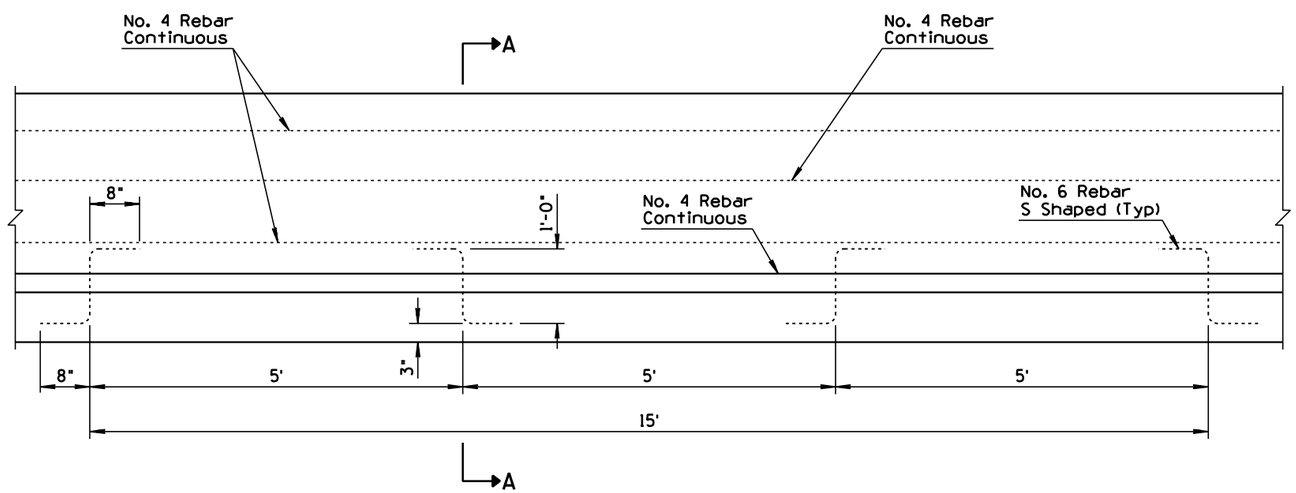

ELEVATION

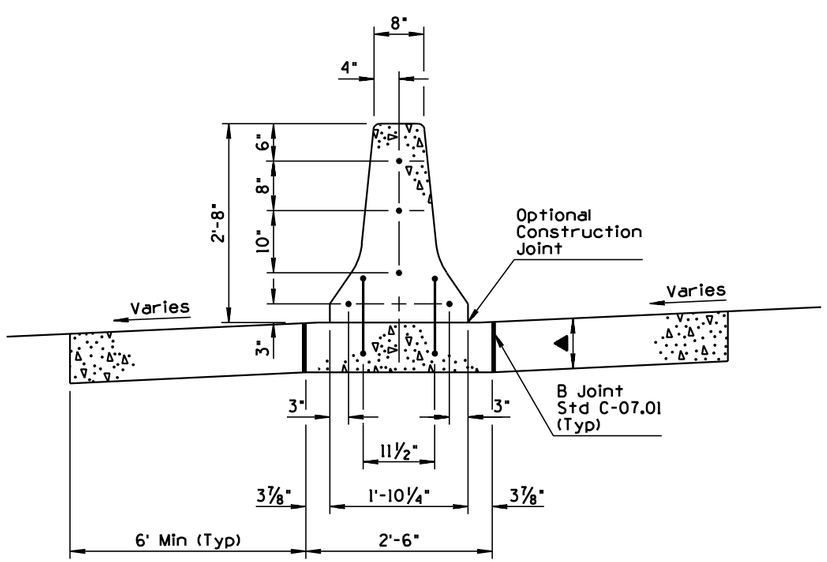

WITH PCC PAVEMENT

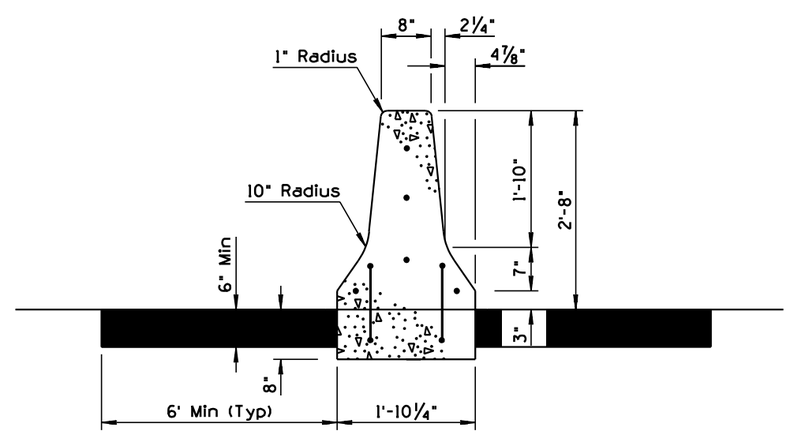

WITH AC PAVEMENT

SECTION A-A

GENERAL NOTES

1. Median Barrier shall be constructed by the slip form or formed Cast-in-Place method.
2. When obstacles are encountered which prevent the use of slip form equipment, the closure shall be accomplished by the use of stationary forms.
3. Concrete shall be Class S, design strength f'_c =3000 PSI.
4. If the footing and barrier are cast monolithically, No. 6 S shaped rebars will not be required.
5. In no case shall the width of barrier exceed the width of the barrier footing or overhang the adjacent pavement.
6. No. 4 Rebar shall extend 12" past the construction joint at the completion of the day's pour.

▲ Depth to match adjacent PCCP thickness (8" Min).

DESIGN APPROVED Terry H. Otterness	STATE OF ARIZONA DEPARTMENT OF TRANSPORTATION DIVISION OF HIGHWAYS STANDARD DRAWINGS	REV. 4/00
APPROVED FOR DISTRIBUTION Ronald C. Williams	MEDIAN BARRIER 32" TYPE 'F', CAST IN PLACE ① SLIP FORM & FIXED FORM	DRAWING NO. C-10.66

NO	DESCRIPTION OF REVISIONS	MADE BY	DATE
1			
2			
3			
4			

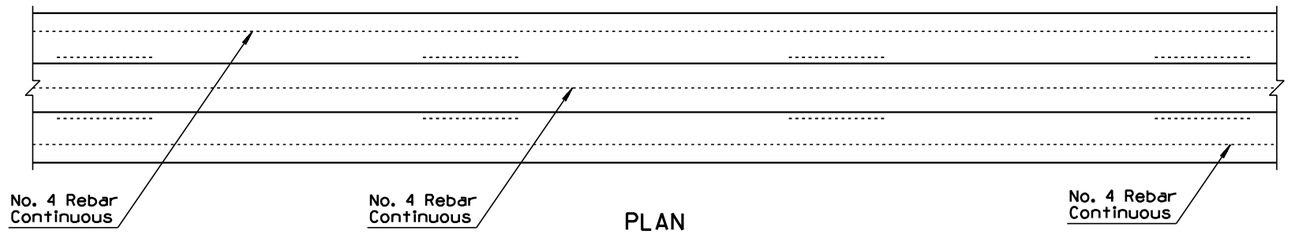

PLAN

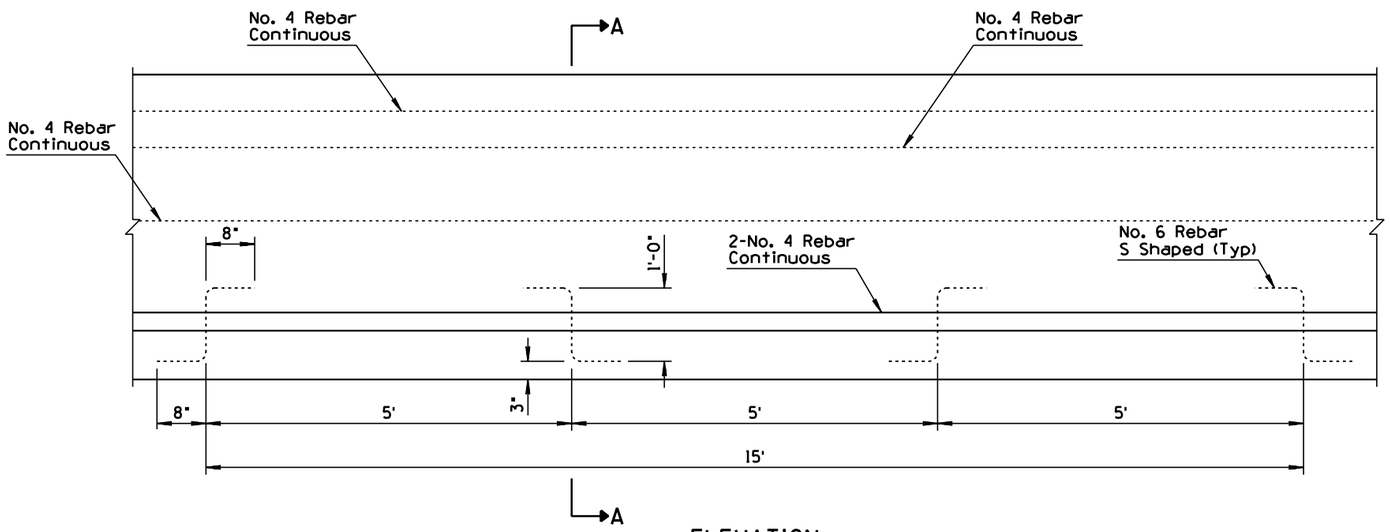

ELEVATION

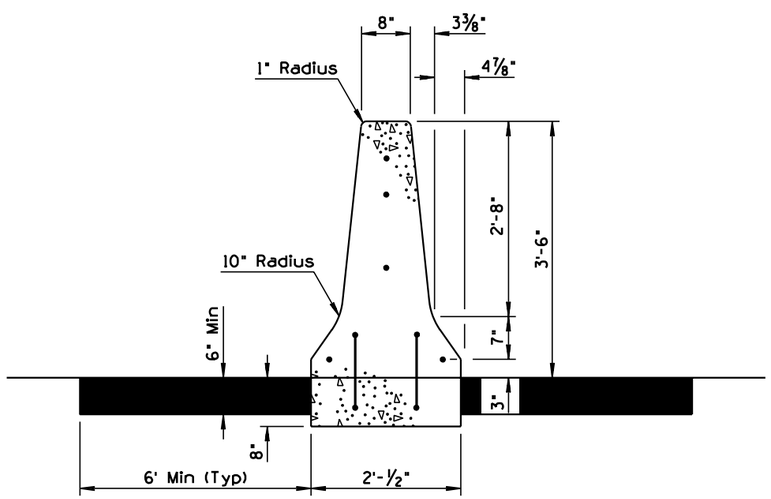

WITH AC PAVEMENT
SECTION A-A

GENERAL NOTES

1. Median Barrier shall be constructed by the slip form or by the formed Cast-in-Place method.
2. When obstacles are encountered which prevent the use of slip form equipment, the closure shall be accomplished by the use of stationary forms.
3. Concrete shall be Class S, design strength f'_c =3000 PSI.
4. If the footing and barrier are cast monolithically, No. 6 S shaped rebars will not be required.
5. In no case shall the width of barrier exceed the width of the barrier footing or overhang the adjacent pavement.
6. No. 4 Rebar shall extend 12" past the construction joint at the completion of the day's pour.

▲ Depth to match adjacent PCCP thickness (8" Min).

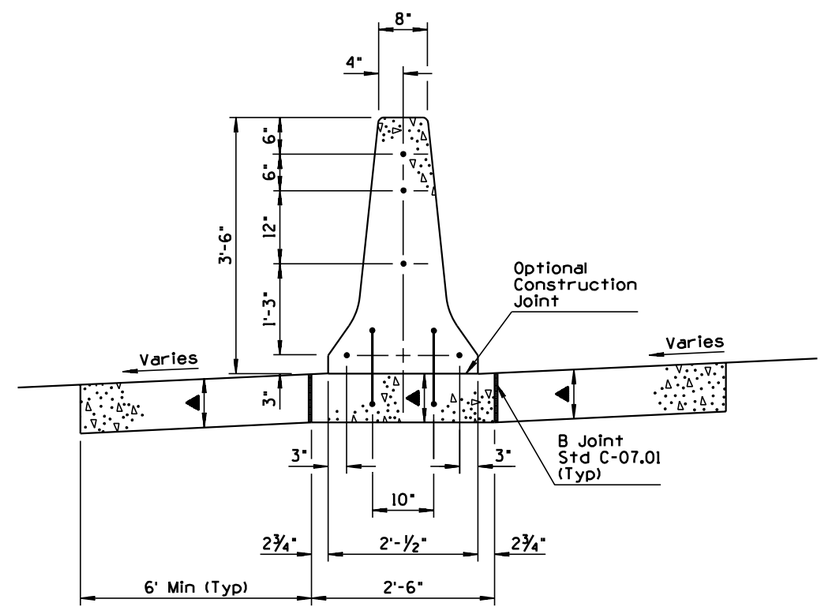

WITH PCC PAVEMENT
SECTION A-A

DESIGN APPROVED	STATE OF ARIZONA DEPARTMENT OF TRANSPORTATION DIVISION OF HIGHWAYS STANDARD DRAWINGS	ISSUE
Jerry H. Ottemas		5/97
APPROVED FOR DISTRIBUTION Ronald C. Williams	CONCRETE MEDIAN BARRIER TALL TYPE 'F' CAST IN PLACE	DRAWING NO. C-10.67

NO	DESCRIPTION OF REVISIONS	MADE BY	DATE
1	REVISED TO REFLECT 'F' SHAPE BARRIER	JNP	4/00
2			
3			
4			

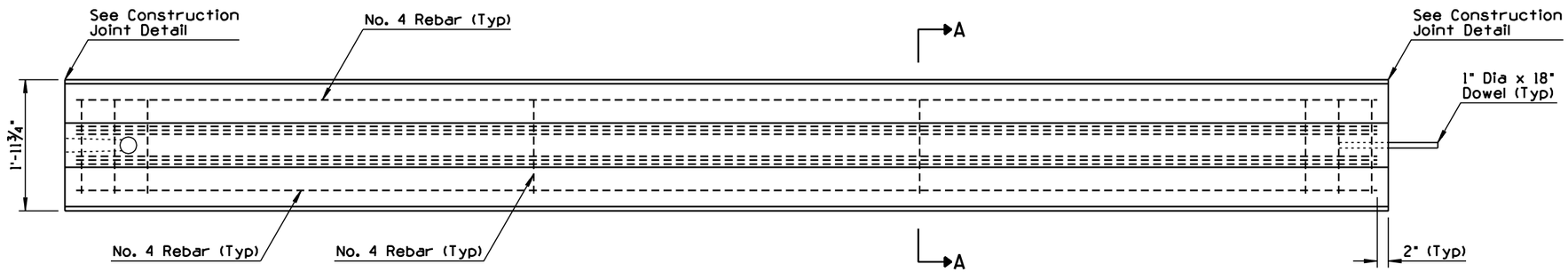

PLAN

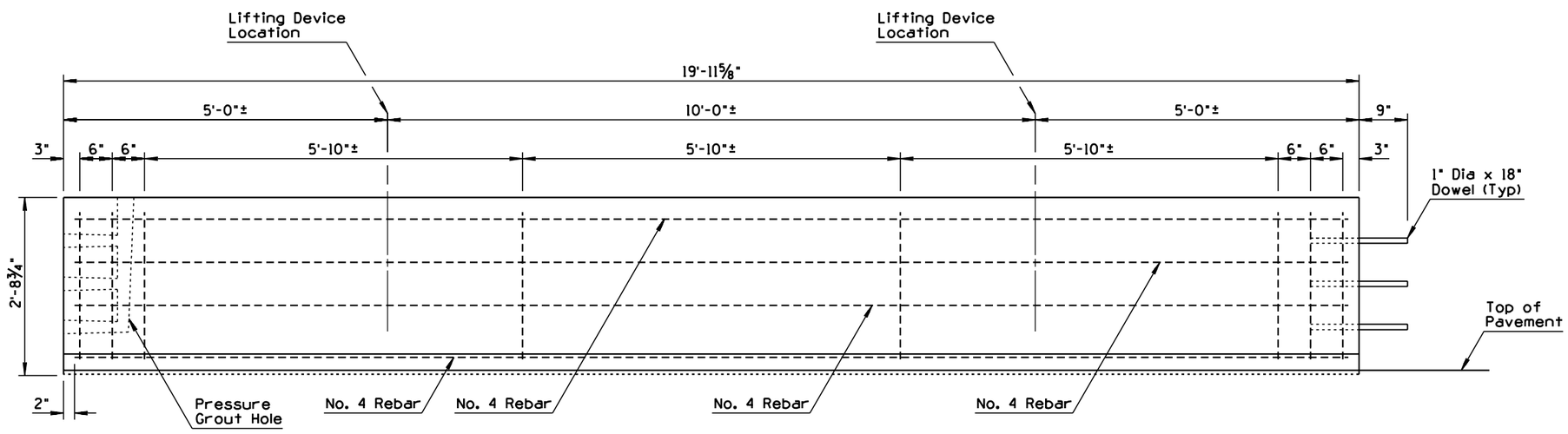

ELEVATION

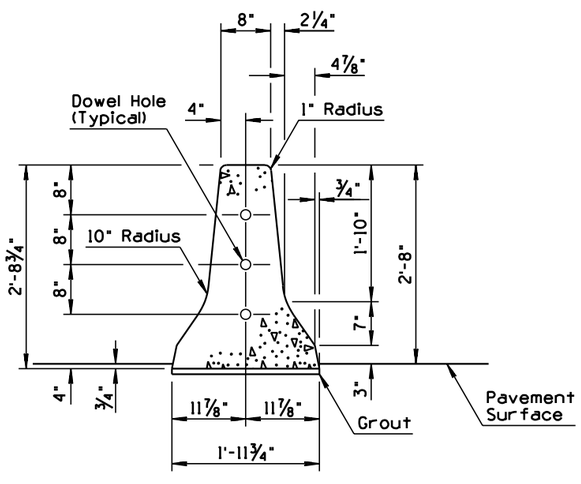

END SECTION

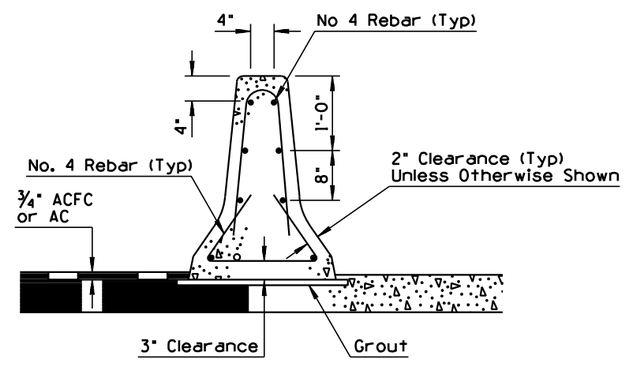

SECTION A-A

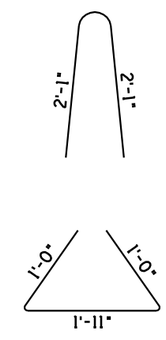

GENERAL NOTES

1. Concrete shall be Class S, design strength f'_c =4000 PSI.
2. Half Barrier shall be placed upon either Asphaltic or Portland Cement Concrete Pavement.
3. Pavement thickness adjacent to Half Barrier shall be ¾" minimum.
4. The Half Barrier shall be placed upon a bed of grout in order to provide a uniform bearing.
5. Doweled joints shall be grouted under pressure until all of the openings and the joints are filled.
6. This standard shall not be used when an individual run consists of less than five 20 foot sections.
7. All bend dimensions for reinforcing steel shall be out-to-out of bars.

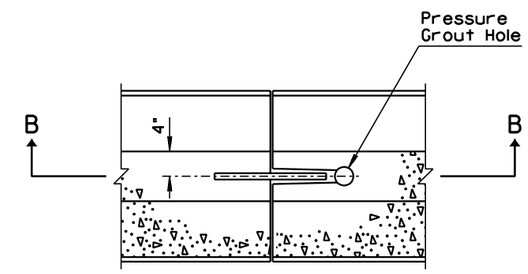

PLAN

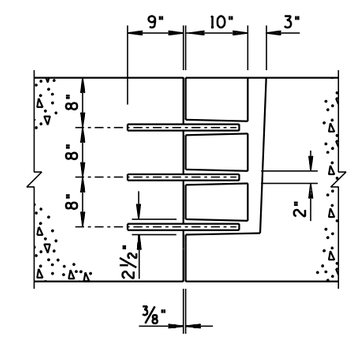

SECTION B-B
CONSTRUCTION JOINT DETAIL

DESIGN APPROVED Terry H. Otterness	STATE OF ARIZONA DEPARTMENT OF TRANSPORTATION DIVISION OF HIGHWAYS STANDARD DRAWINGS	REV. 4/00
APPROVED FOR DISTRIBUTION Ronald C. Williams	CONCRETE MEDIAN BARRIER 32" TYPE 'F' PRECAST (1)	DRAWING NO. C-10.68

NO	DESCRIPTION OF REVISIONS	MADE BY	DATE
1	REVISED TO MEET NCHRP 350 REQUIREMENTS	JNP	8/99
2	RAISED THRIE BEAM 1"	RLF	7/01
3			
4			

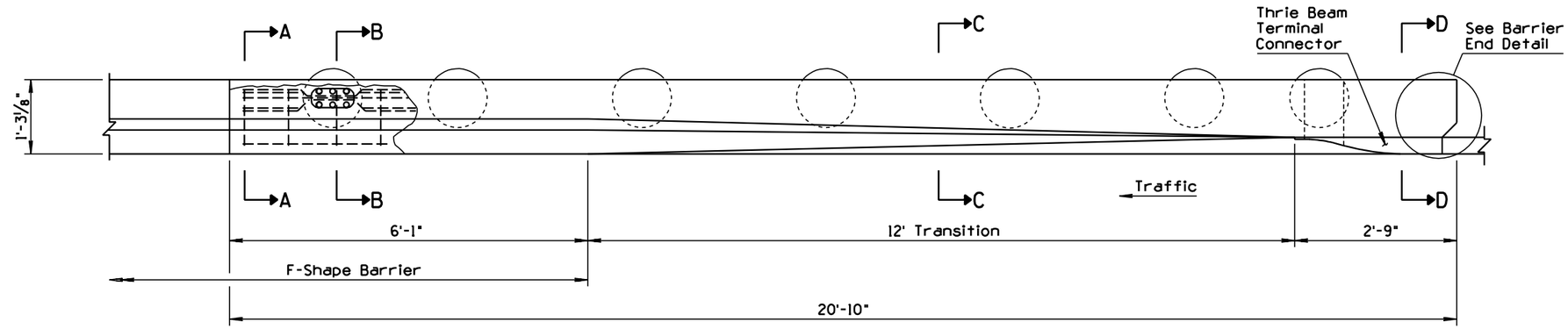

PLAN

GENERAL NOTES

1. Concrete shall be constructed by the Fixed Form Cast-In-Place method.
2. Concrete shall be Class S, design strength f'_c = 3000 psi.
3. All reinforcing steel shall have 2" minimum clear cover unless otherwise noted.
4. All bend dimensions for reinforcing steel shall out-to-out of bars.

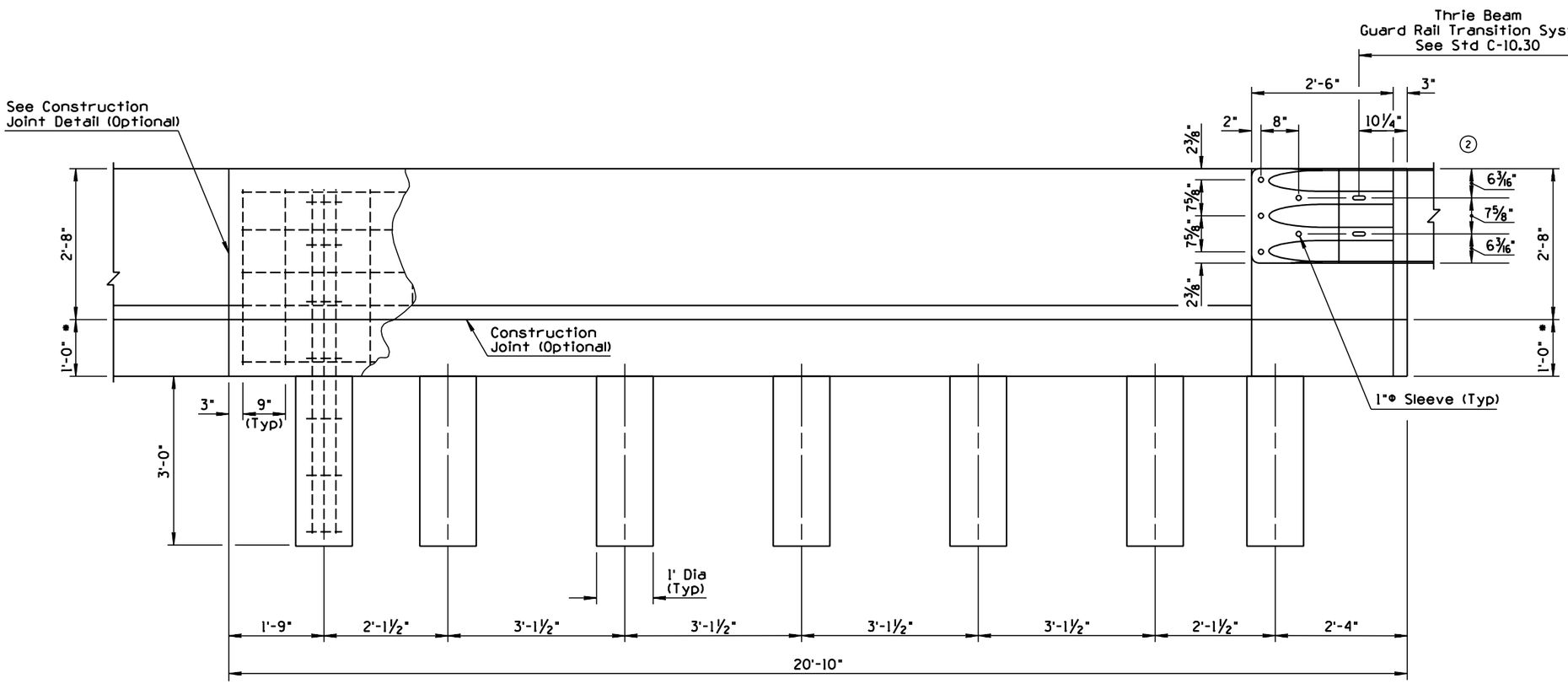

ELEVATION
BARRIER WITHOUT CURB

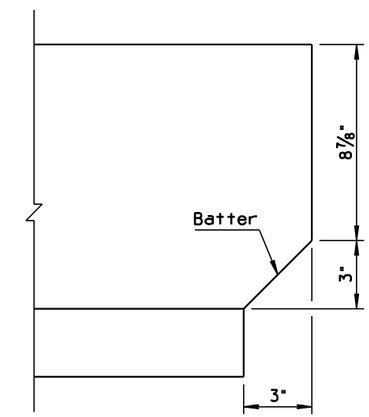

BARRIER END DETAIL

* 1'-0" Min or Match Thickness of Adjacant PCC Pavement

DESIGN APPROVED John L. Laue	STATE OF ARIZONA DEPARTMENT OF TRANSPORTATION DIVISION OF HIGHWAYS STANDARD DRAWINGS	REV. 7/01
APPROVED FOR DISTRIBUTION Ronald C. Williams	CONCRETE HALF BARRIER TRANSITION TO VERTICAL 32" TYPE 'F' WITH CAISSONS (1)	DRAWING NO. C-10.70 Sheet 1 of 3

NO	DESCRIPTION OF REVISIONS	MADE BY	DATE
1	REVISED TO MEET NCHRP 350 REQUIREMENTS	JNP	8/99
2	RAISED THRIE BEAM 1" & REPOSITIONED TOP REBAR	RLF	7/01
3	REVISED FROM PIPE TO SLEEVE	RLF	7/01
4	REVISED REBAR DIMENSIONS	RLF	7/01

GENERAL NOTES

1. See section B-B for caisson reinforcement.

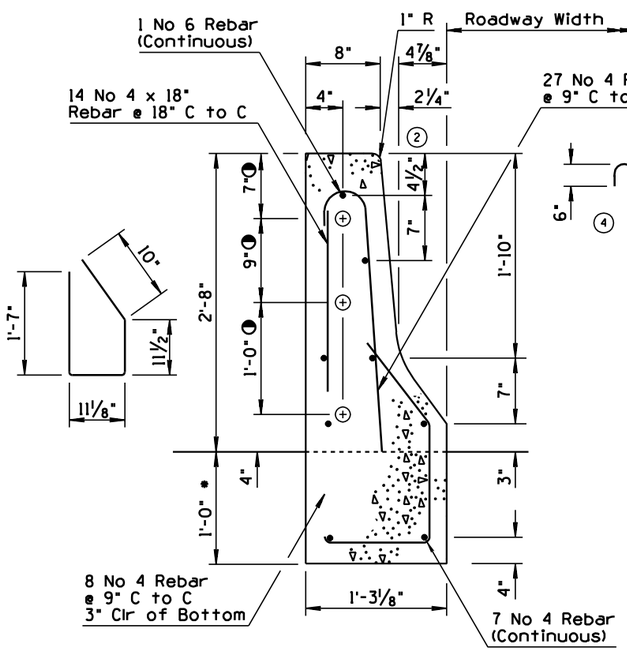

WITHOUT CURB
SECTION A-A

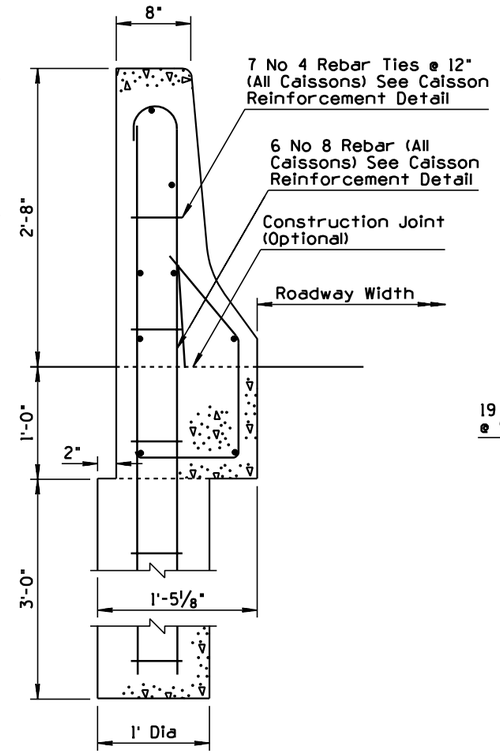

WITHOUT CURB
SECTION B-B

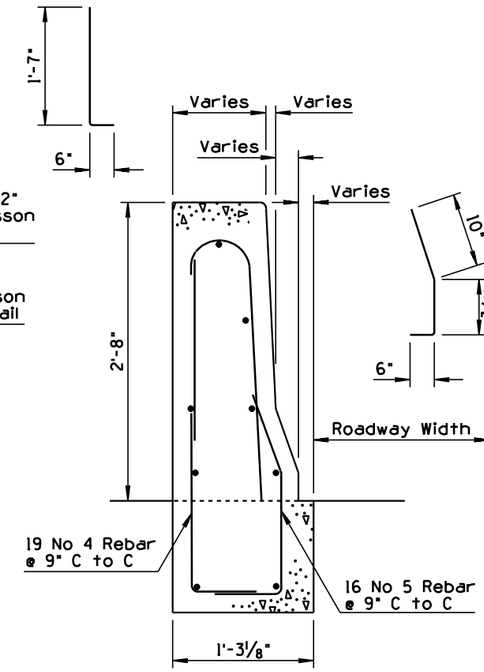

WITHOUT CURB
SECTION C-C

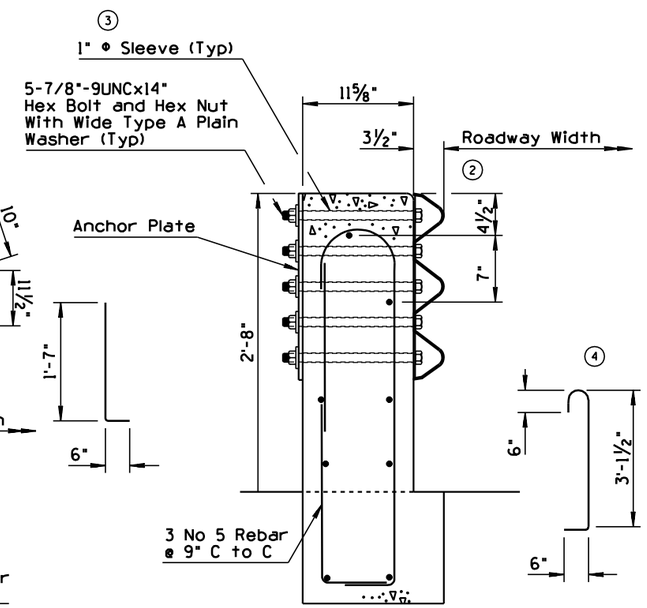

WITHOUT CURB
SECTION D-D

* 1-0" Min or Match Thickness of Adjacent ACC Pavement

◑ See Optional Construction Joint Detail, Sheet 3

DESIGN APPROVED	STATE OF ARIZONA DEPARTMENT OF TRANSPORTATION DIVISION OF HIGHWAYS STANDARD DRAWINGS	REV. 7/01
APPROVED FOR DISTRIBUTION	CONCRETE HALF BARRIER TRANSITION TO VERTICAL 32" TYPE 'F' WITH CAISSONS (1)	DRAWING NO. C-10.70 Sheet 2 of 3

NO	DESCRIPTION OF REVISIONS	MADE BY	DATE
1	REVISED DRAWING & DIMENSIONS	JNP	4/00
2			
3			
4			

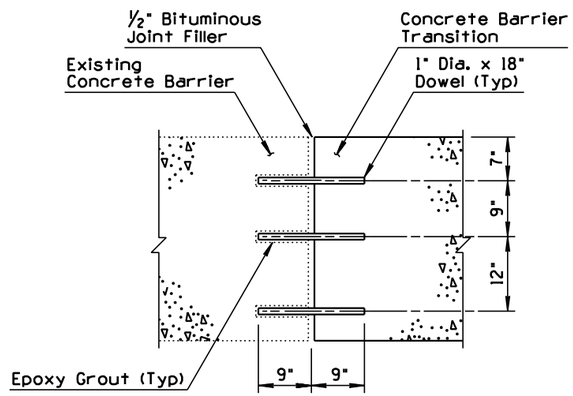

Joint Assembly

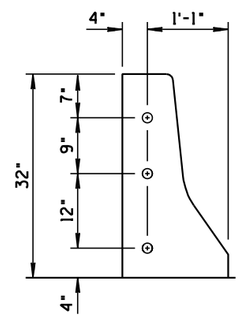

Dowel Locations

CONSTRUCTION JOINT DETAIL
(OPTIONAL)

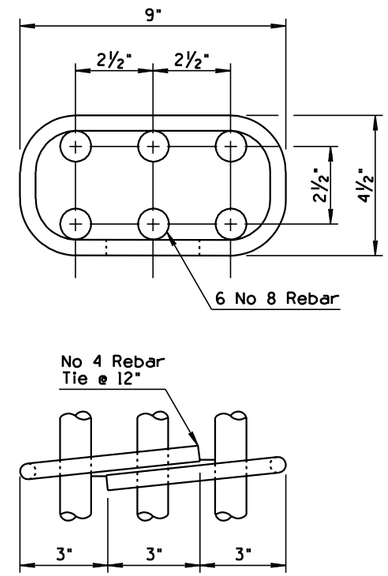

CAISSON REINFORCEMENT

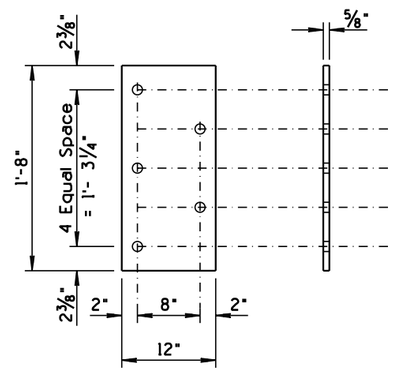

Anchor Plate ①

DESIGN APPROVED Terry H. Otterness	STATE OF ARIZONA DEPARTMENT OF TRANSPORTATION DIVISION OF HIGHWAYS STANDARD DRAWINGS	REV. 4/00
APPROVED FOR DISTRIBUTION Ronald C. Williams	CONCRETE HALF BARRIER TRANSITION TO VERTICAL 32" TYPE 'F' WITH CAISSONS	DRAWING NO. C-10.70 Sheet 3 of 3

NO	DESCRIPTION OF REVISIONS	MADE BY	DATE
1	REVISED TO MEET NCHRP 350 REQUIREMENTS	JNP	8/99
2	RAISED THRIE BEAM 1"	RLF	7/01
3			
4			

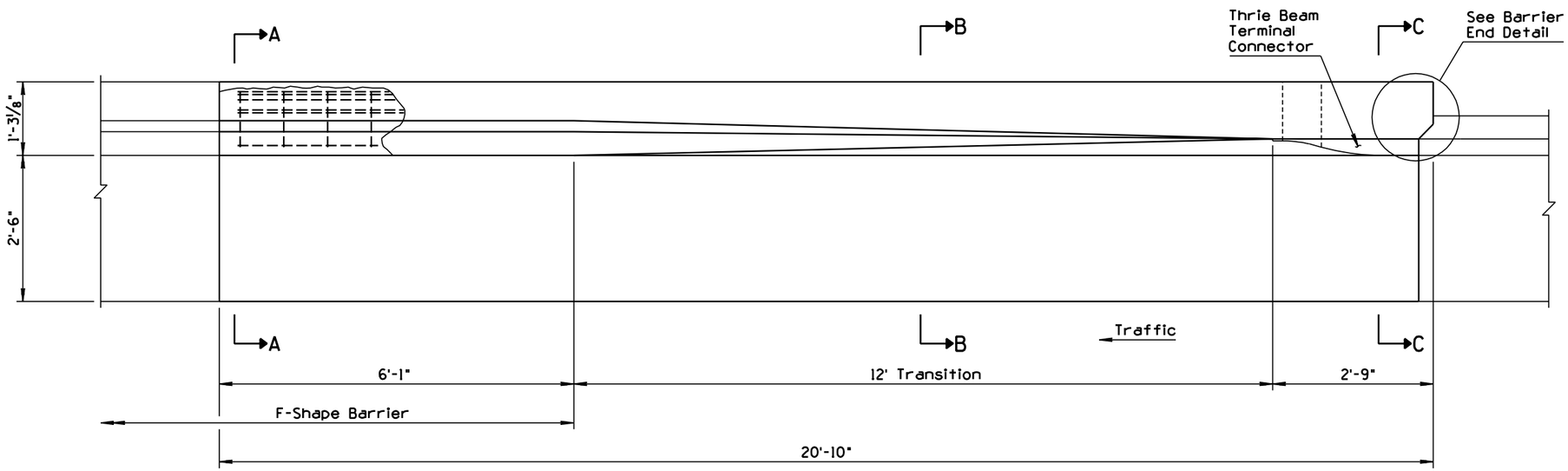

PLAN

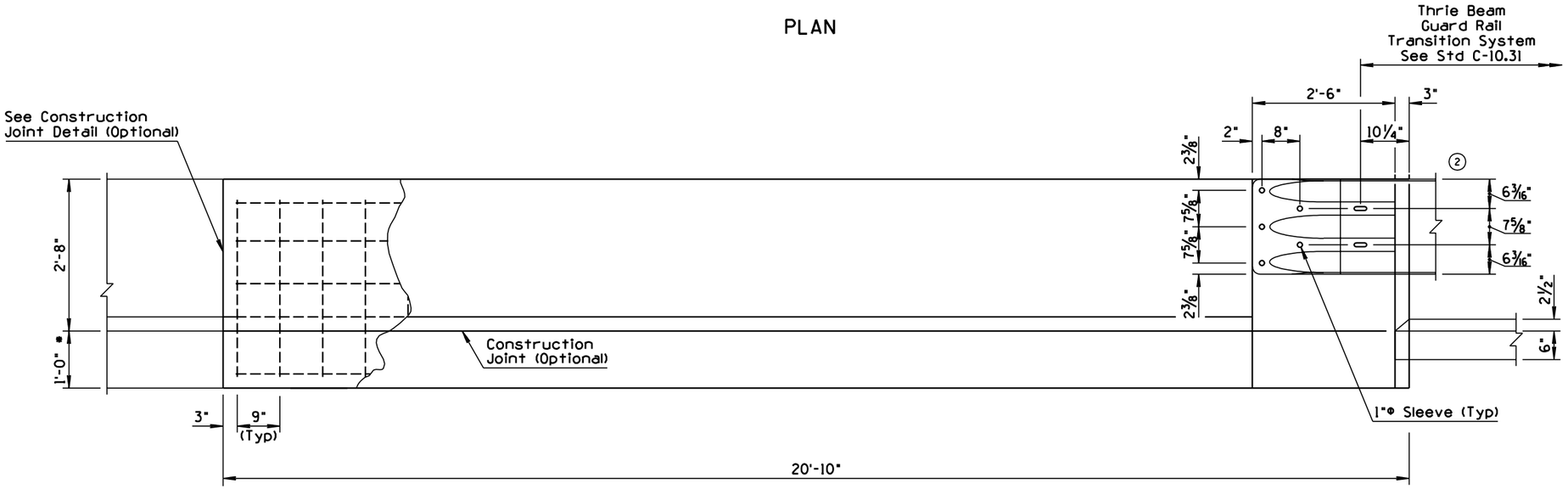

ELEVATION
BARRIER WITH CURB AND GUTTER

* 1'-0" Min or Match Thickness of Adjacent ACC Pavement

GENERAL NOTES

1. Concrete shall be constructed by the Fixed Form Cast-in-Place method.
2. Concrete shall be Class S, design strength f'_c = 3000 psi.
3. All reinforcing steel shall have 2" minimum clear cover unless otherwise noted.
4. All bend dimensions for reinforcing steel shall out-to-out of bars.
5. Two inch deep contraction joints shall be placed in the gutter at locations which match the joints in adjacent portland cement concrete pavement and at approximate 15 foot centers when adjacent to asphaltic concrete pavement. Joints shall be either hand tooled or sawed.

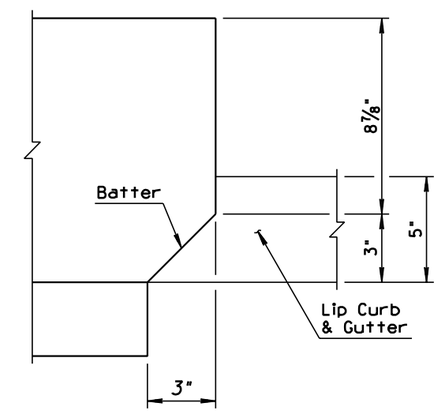

BARRIER END DETAIL

DESIGN APPROVED	STATE OF ARIZONA DEPARTMENT OF TRANSPORTATION DIVISION OF HIGHWAYS STANDARD DRAWINGS	REV. 7/01
APPROVED FOR DISTRIBUTION	CONCRETE HALF BARRIER TRANSITION TO VERTICAL 32" (1) TYPE 'F' WITH GUTTER	DRAWING NO. C-10.71 Sheet 1 of 2

NO	DESCRIPTION OF REVISIONS	MADE BY	DATE
1	REVISED DRAWING & DIMENSIONS	JNP	4/00
2	RAISED THRIE BEAM 1" & REPOSITIONED TOP REBAR	RLF	7/01
3	REVISED FROM PIPE TO SLEEVE	RLF	7/01
4	REVISED REBAR DIMENSIONS	RLF	7/01

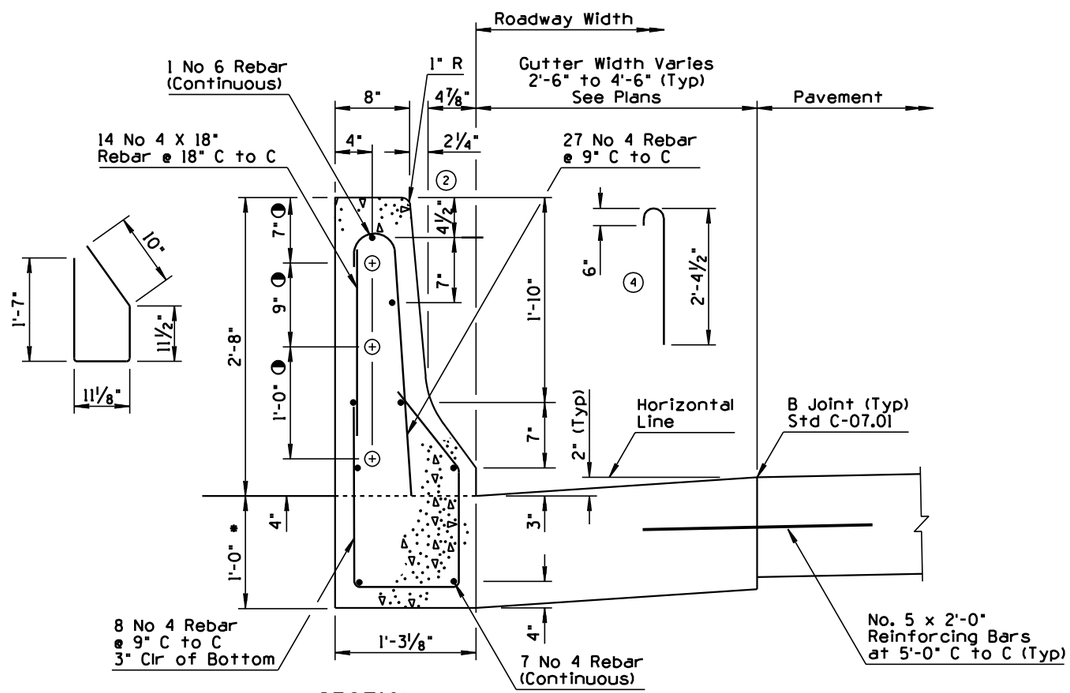

SECTION A-A

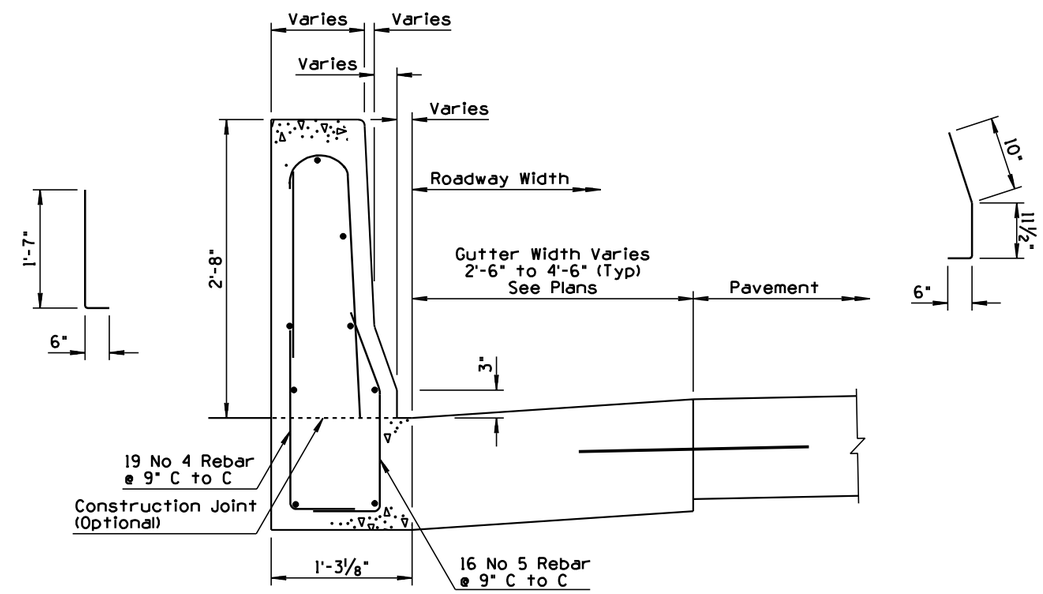

SECTION B-B

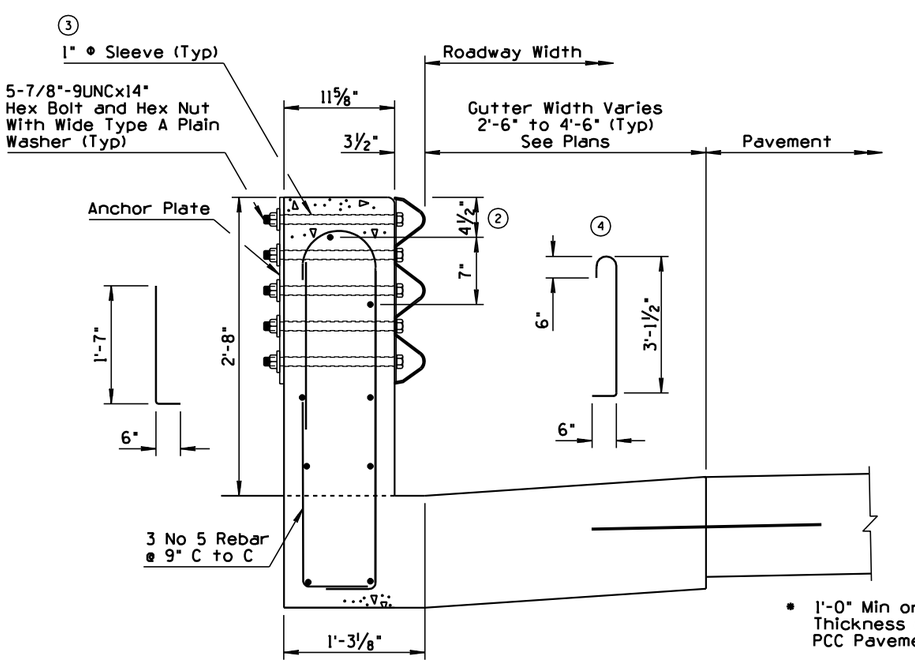

SECTION C-C

* 1'-0" Min or Match Thickness of Adjacent PCC Pavement

◑ See Optional Construction Joint Detail

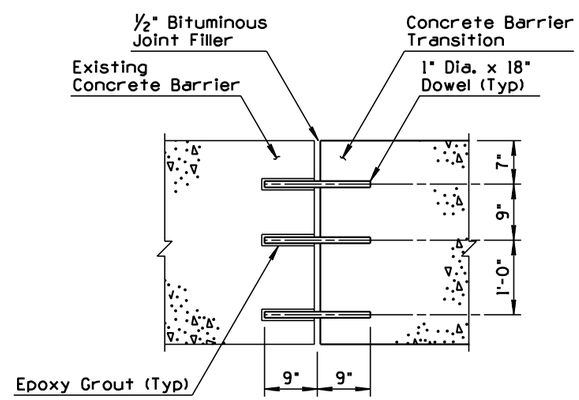

Joint Assembly

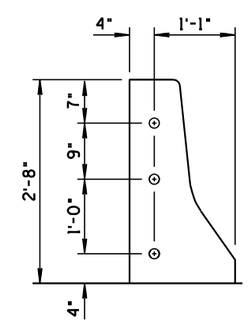

Dowel Locations

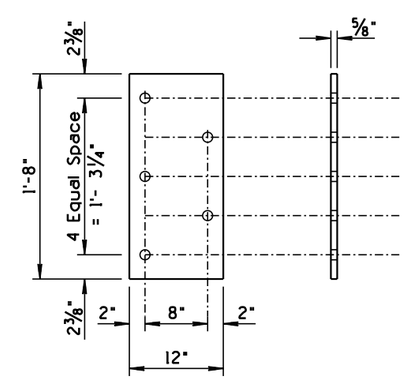

Anchor Plate ①

CONSTRUCTION JOINT DETAIL (OPTIONAL)

DESIGN APPROVED

APPROVED FOR DISTRIBUTION

STATE OF ARIZONA
DEPARTMENT OF TRANSPORTATION
DIVISION OF HIGHWAYS
STANDARD DRAWINGS

REV. 7/01

CONCRETE HALF BARRIER TRANSITION TO VERTICAL 32" TYPE 'F' WITH GUTTER

DRAWING NO. C-10.71
Sheet 2 of 2

NO	DESCRIPTION OF REVISIONS	MADE BY	DATE
1	NEW STANDARD DEVELOPED	JNP	8/99
2	RAISED THRIE BEAM 1"	RLF	7/01
3			
4			

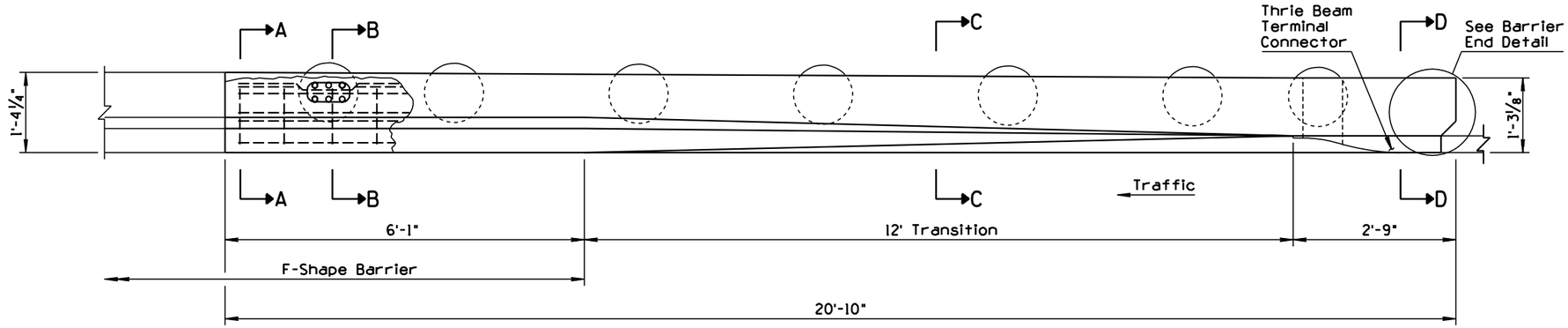

PLAN

GENERAL NOTES

1. Concrete shall be constructed by the Fixed Form Cast-In-Place method.
2. Concrete shall be Class S, design strength f'_c = 3000 psi.
3. All reinforcing steel shall have 2" minimum clear cover unless otherwise noted.
4. All bend dimensions for reinforcing steel shall out-to-out of bars.

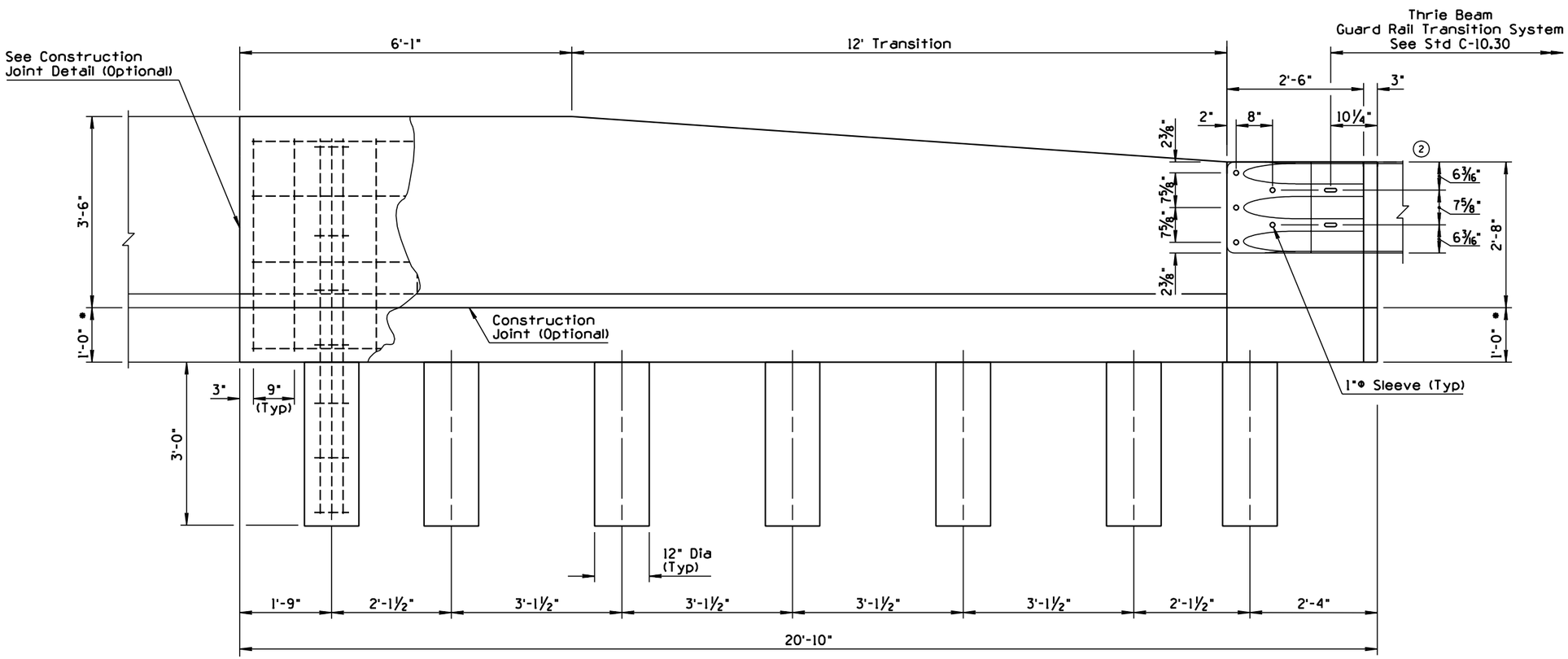

ELEVATION
BARRIER WITHOUT CURB

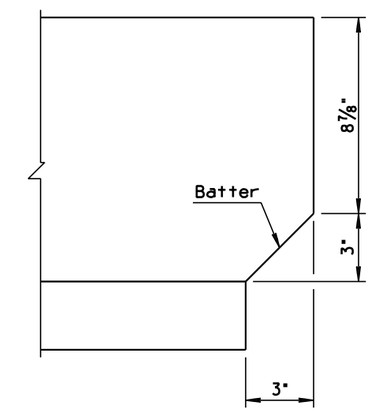

BARRIER END DETAIL

* 1'-0" Min or Match Thickness of Adjacant PCC Pavement

DESIGN APPROVED John L. Lewis	STATE OF ARIZONA DEPARTMENT OF TRANSPORTATION DIVISION OF HIGHWAYS STANDARD DRAWINGS	REV. 7/01
APPROVED FOR DISTRIBUTION Ronald C. Williams	CONCRETE HALF BARRIER (1) TRANSITION TO VERTICAL 42" TO 32" TYPE 'F' WITH CAISSONS	DRAWING NO. C-10.72 Sheet 1 of 3

NO	DESCRIPTION OF REVISIONS	MADE BY	DATE
1	NEW STANDARD DEVELOPED	JNP	8/99
2	RAISED THRIE BEAM 1" & REPOSITIONED TOP REBAR	RLF	7/01
3	REVISED FROM PIPE TO SLEEVE	RLF	7/01
4	REVISED REBAR DIMENSION	RLF	7/01

GENERAL NOTES

1. See section B-B for caisson reinforcement.

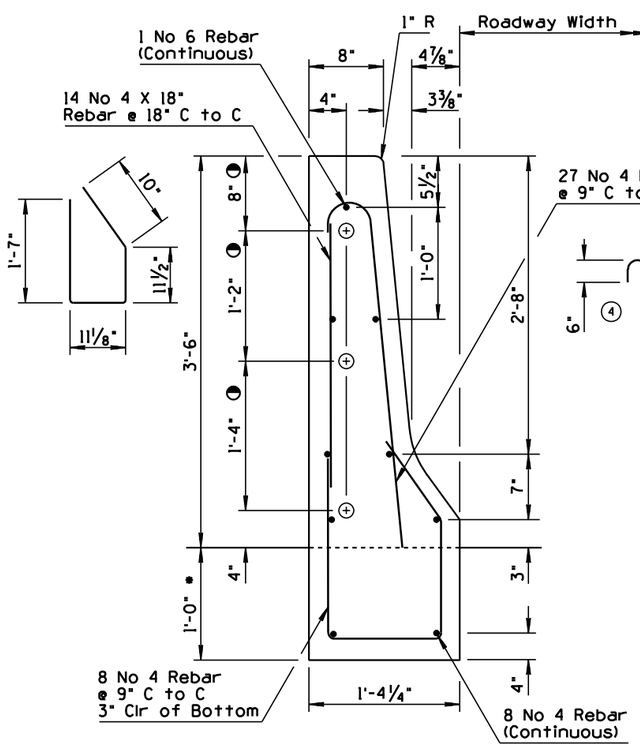

WITHOUT CURB
SECTION A-A

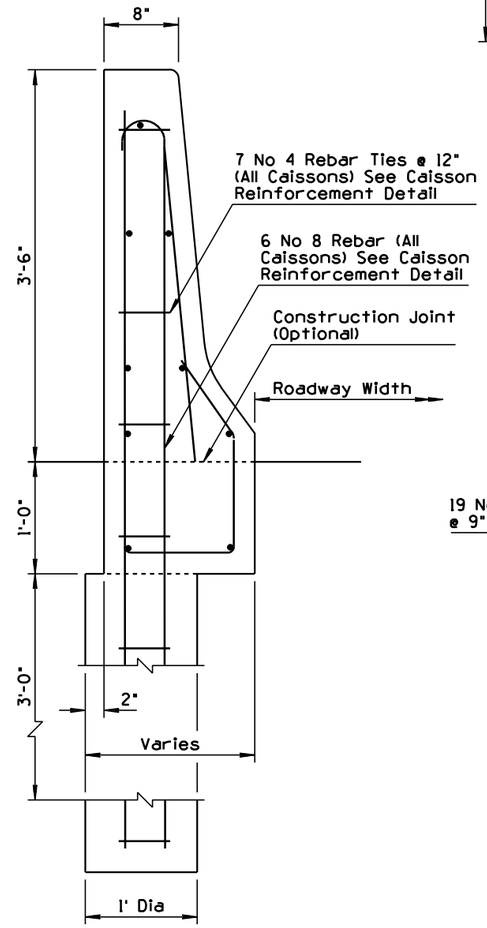

WITHOUT CURB
SECTION B-B

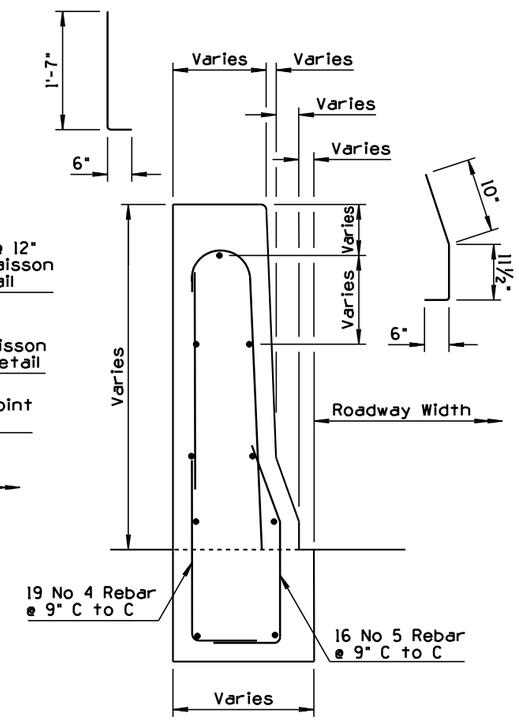

WITHOUT CURB

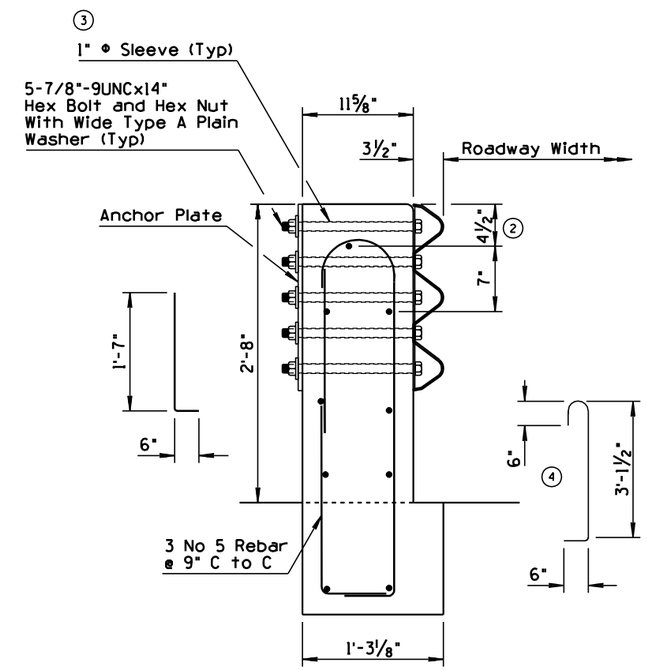

WITHOUT CURB
SECTION D-D

* 1'-0" Min or Match Thickness of Adjacent PCC Pavement

◑ See Optional Construction Joint Detail, Sheet 3

DESIGN APPROVED John L. Lewis	STATE OF ARIZONA DEPARTMENT OF TRANSPORTATION DIVISION OF HIGHWAYS STANDARD DRAWINGS	REV. 7/01
APPROVED FOR DISTRIBUTION Ronald C. Williams	CONCRETE HALF BARRIER ① TRANSITION TO VERTICAL 42" TO 32" TYPE 'F' WITH CAISSONS	DRAWING NO. C-10.72 Sheet 2 of 3

NO	DESCRIPTION OF REVISIONS	MADE BY	DATE
1	REVISED DRAWING & DIMENSIONS	JNP	4/00
2			
3			
4			

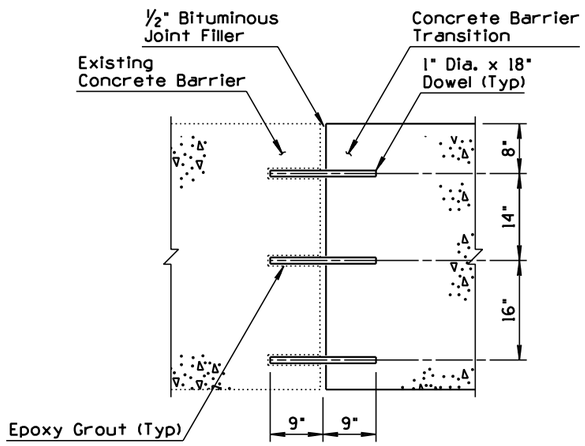

Joint Assembly

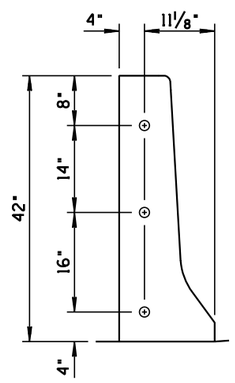

Dowel Locations

CONSTRUCTION JOINT DETAIL
(OPTIONAL)

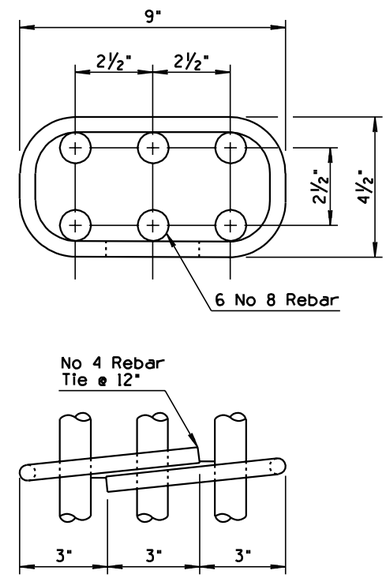

CAISSON REINFORCEMENT

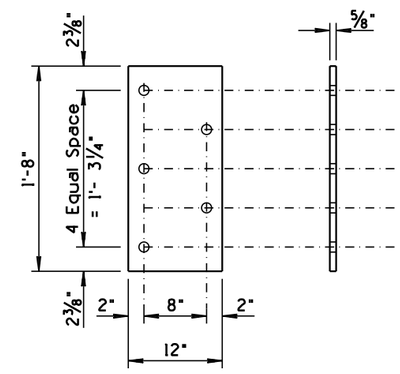

Anchor Plate ①

DESIGN APPROVED Terry H. Ottenness	STATE OF ARIZONA DEPARTMENT OF TRANSPORTATION DIVISION OF HIGHWAYS STANDARD DRAWINGS	REV. 4/00
APPROVED FOR DISTRIBUTION Ronald C. Williams	CONCRETE HALF BARRIER TRANSITION TO VERTICAL 42" TO 32" TYPE 'F' WITH CAISSONS	DRAWING NO. C-10.72 Sheet 3 of 3

NO	DESCRIPTION OF REVISIONS	MADE BY	DATE
1	NEW STANDARD DEVELOPED	JNP	8/99
2	RAISED THRIE BEAM 1"	RLF	7/01
3			
4			

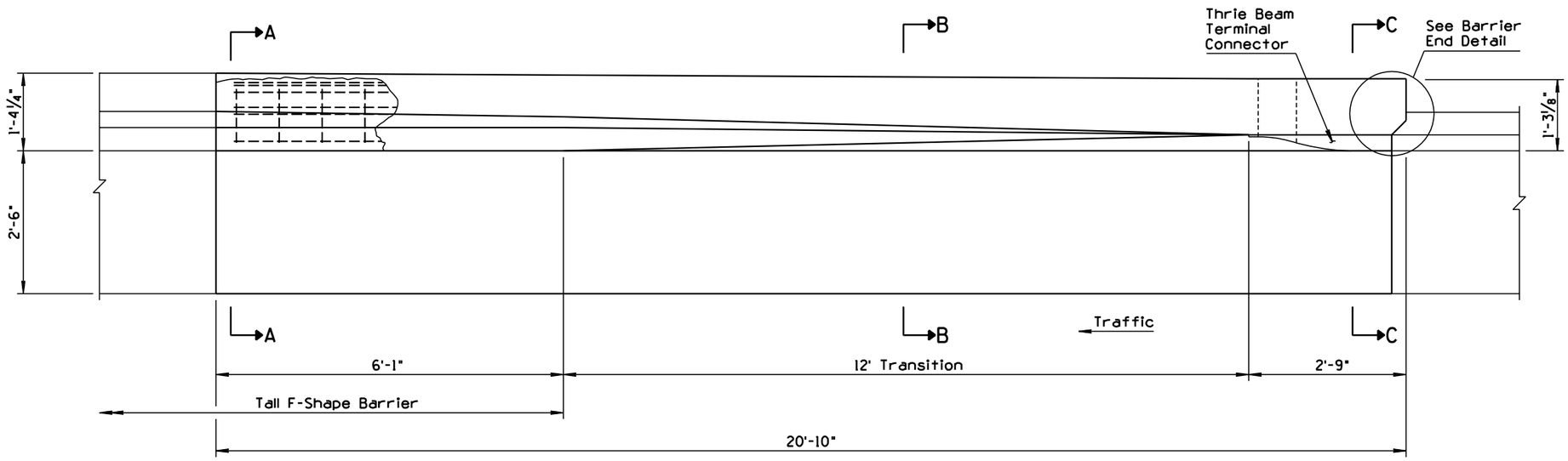

PLAN

GENERAL NOTES

1. Concrete shall be constructed by the Fixed Form Cast-In-Place method.
2. Concrete shall be Class S, design strength f'_c = 3000 psi.
3. All reinforcing steel shall have 2" minimum clear cover unless otherwise noted.
4. All bend dimensions for reinforcing steel shall out-to-out of bars.
5. Two inch deep contraction joints shall be placed in the gutter at locations which match the joints in adjacent portland cement concrete pavement and at approximate 15 foot centers when adjacent to asphaltic concrete pavement. Joints shall be either hand tooled or sawed.

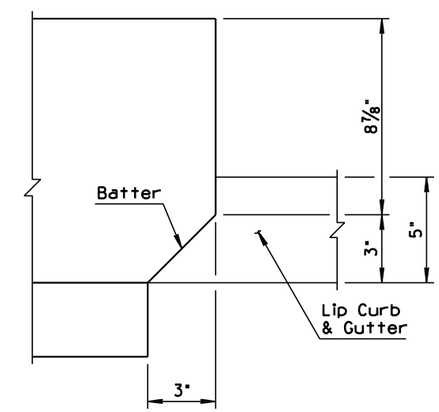

BARRIER END DETAIL

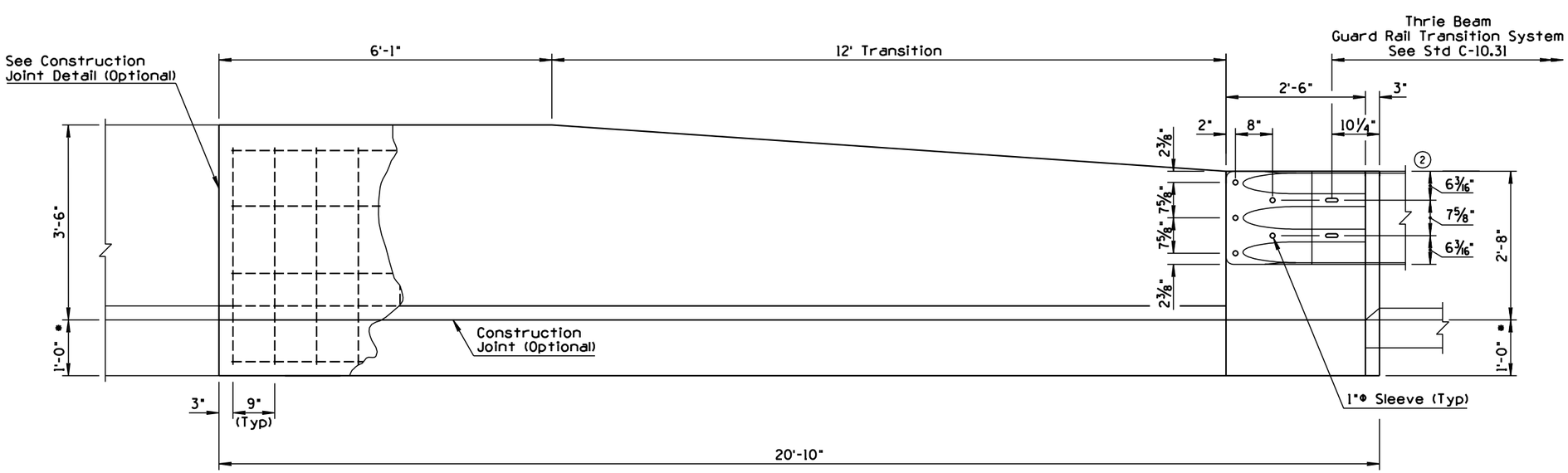

ELEVATION

BARRIER WITH CURB AND GUTTER

* 1'-0" Min or Match Thickness of Adjacant ACC Pavement

DESIGN APPROVED John L. Lewis	STATE OF ARIZONA DEPARTMENT OF TRANSPORTATION DIVISION OF HIGHWAYS STANDARD DRAWINGS	REV. 7/01
APPROVED FOR DISTRIBUTION Ronald C. Williams	CONCRETE HALF BARRIER (1) TRANSITION TO VERTICAL 42" TO 32" TYPE 'F' WITH GUTTER	DRAWING NO. C-10.73 Sheet 1 of 2

NO	DESCRIPTION OF REVISIONS	MADE BY	DATE
1	REVISED DRAWING & DIMENSIONS	JNP	4/00
2	RAISED THRIE BEAM 1" & RAISED TOP REBAR	RLF	7/01
3	REVISED FROM PIPE TO SLEEVE	RLF	7/01
4	REVISED REBAR DIMENSIONS	RLF	7/01

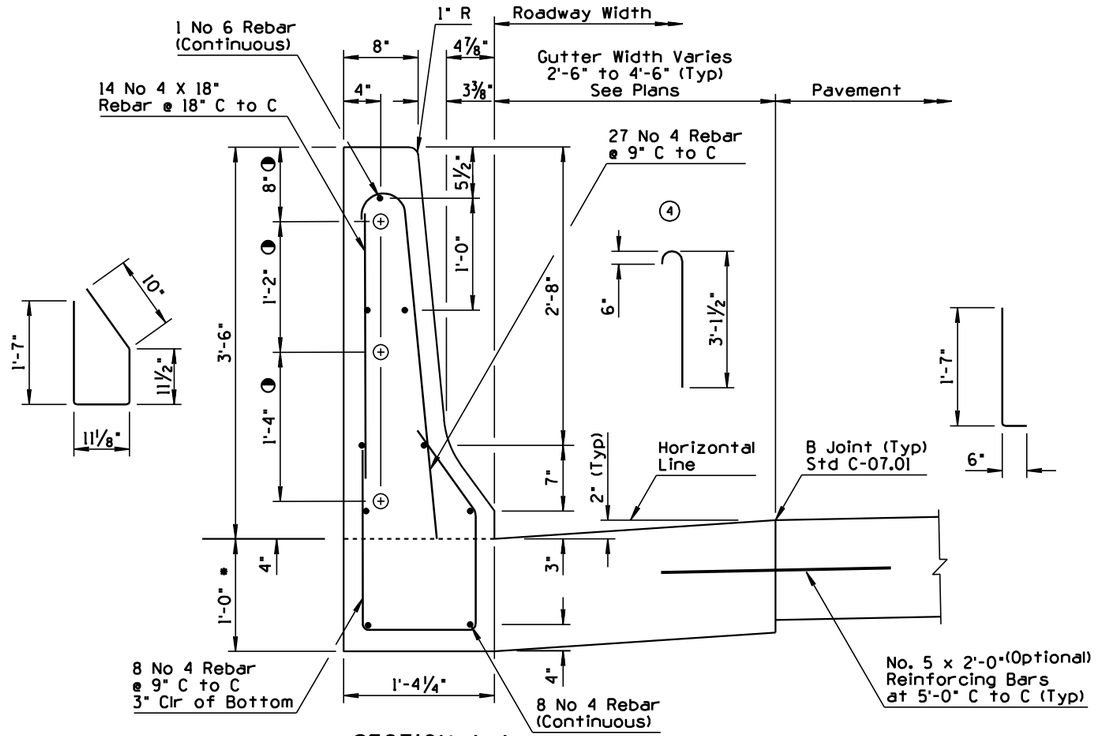

SECTION A-A

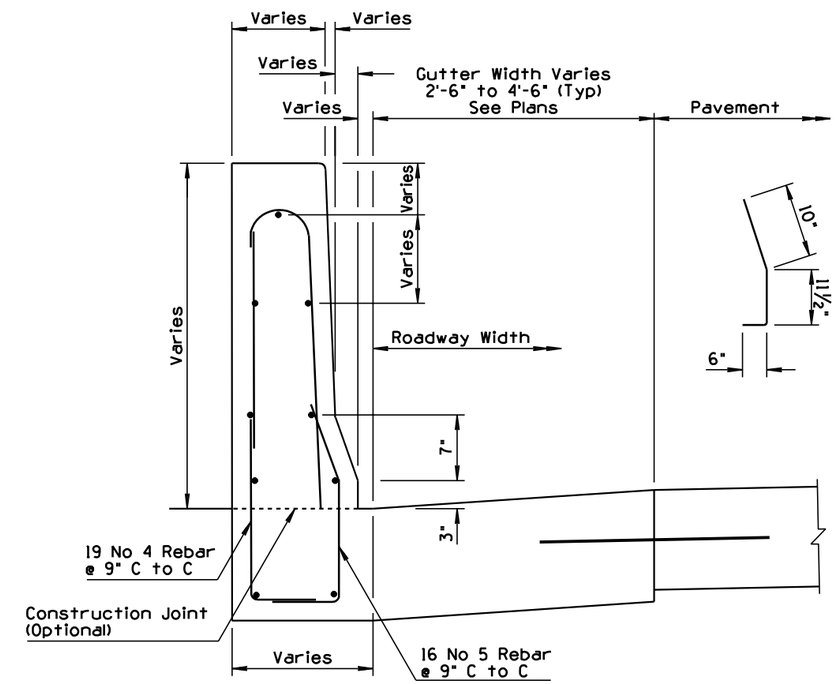

SECTION B-B

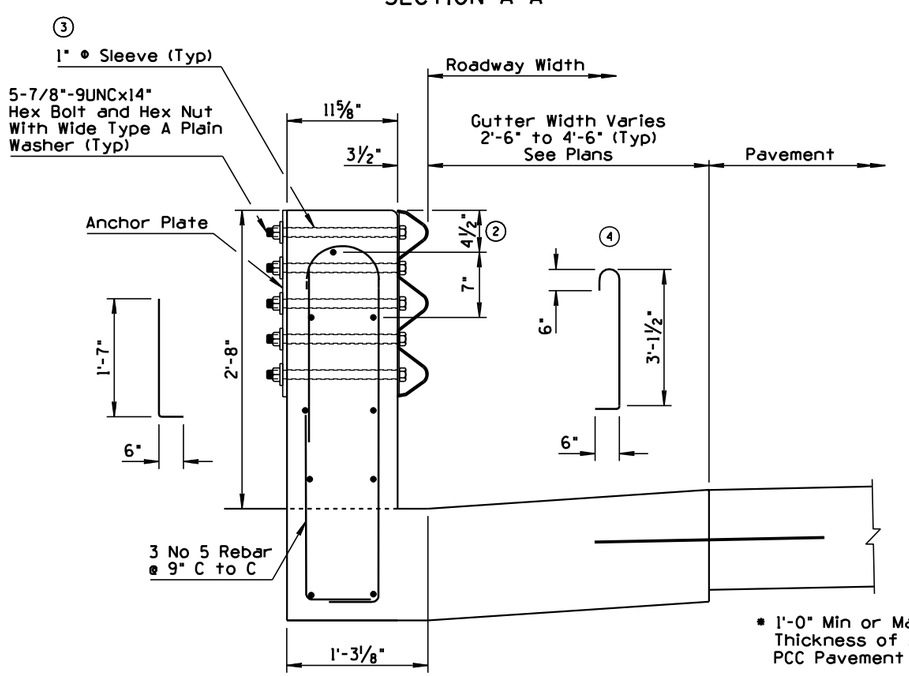

SECTION C-C

* 1'-0" Min or Match Thickness of Adjacant PCC Pavement

◑ See Optional Construction Joint Detail

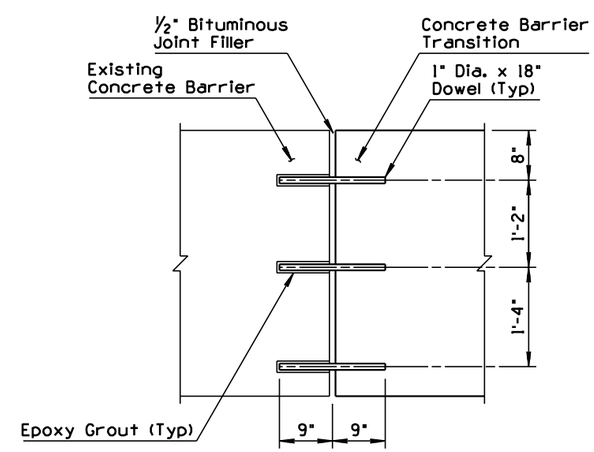

Joint Assembly

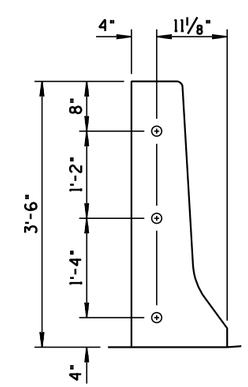

Dowel Locations

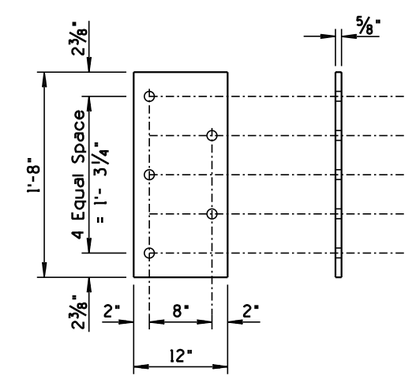

Anchor Plate ①

CONSTRUCTION JOINT DETAIL (OPTIONAL)

DESIGN APPROVED

APPROVED FOR DISTRIBUTION

STATE OF ARIZONA
DEPARTMENT OF TRANSPORTATION
DIVISION OF HIGHWAYS
STANDARD DRAWINGS

REV. 7/01

CONCRETE HALF BARRIER
TRANSITION TO VERTICAL 42" TO 32"
TYPE 'F' WITH GUTTER

DRAWING NO. C-10.73
Sheet 2 of 2

NO	DESCRIPTION OF REVISIONS	MADE BY	DATE
1	REVISED TO REFLECT 'F' SHAPE BARRIER	JNP	8/99
2			
3			
4			

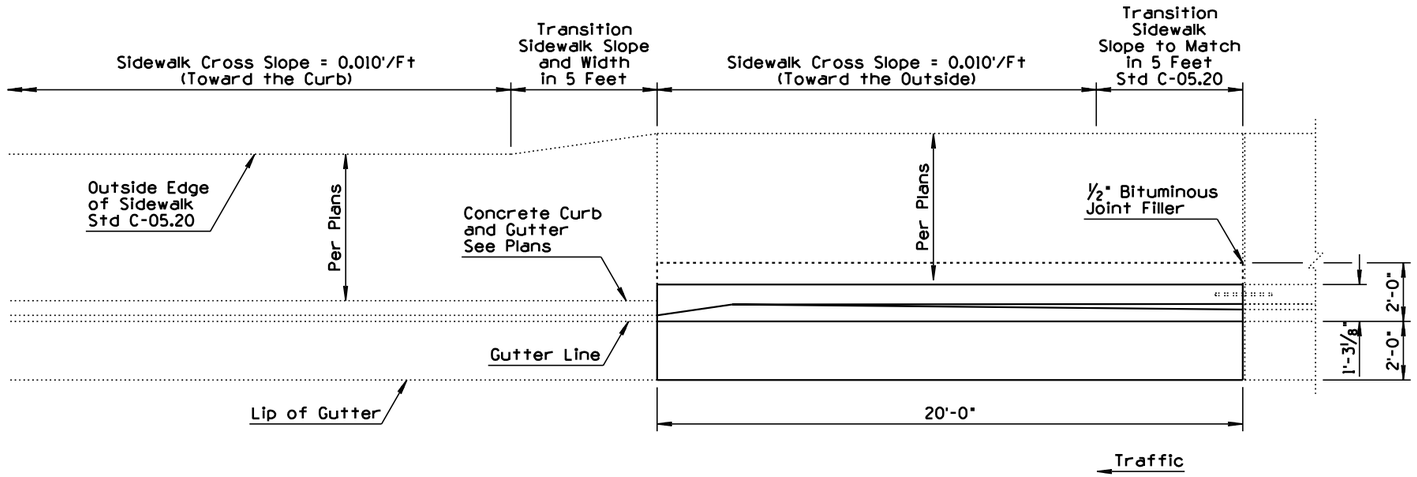

PLAN VIEW

GENERAL NOTES

1. All concrete shall be Class "S" (f'c =3000 psi).
2. All reinforcing steel shall conform to Section 1003.
3. All reinforcing steel shall have 2" minimum clear cover unless otherwise noted.
4. See drainage sheets for slotted drain and catch basin details.
5. Barrier transition shall match both adjoining curb and gutter and concrete half barrier.
6. See Std. C-05.20 for sidewalk construction.
7. All bend dimensions for reinforcing steel shall be out-to-out of bars.
8. Two inch deep contraction joints shall be placed in the gutter at locations which match the joints in adjacent portland cement concrete pavement and at approximate 15 foot centers when adjacent to asphaltic concrete pavement. Joints shall be either hand tooled or sawed.

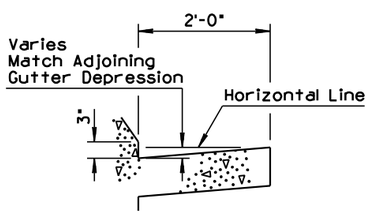

BARRIER GUTTER DETAIL

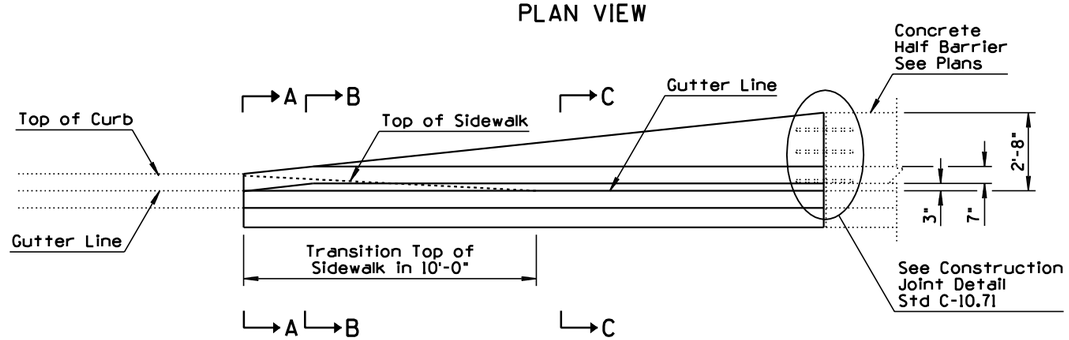

ELEVATION

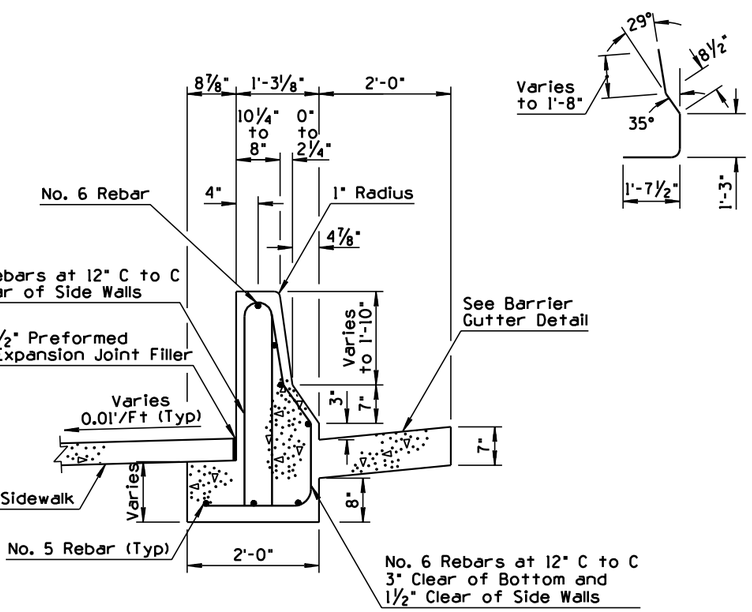

SECTION C-C

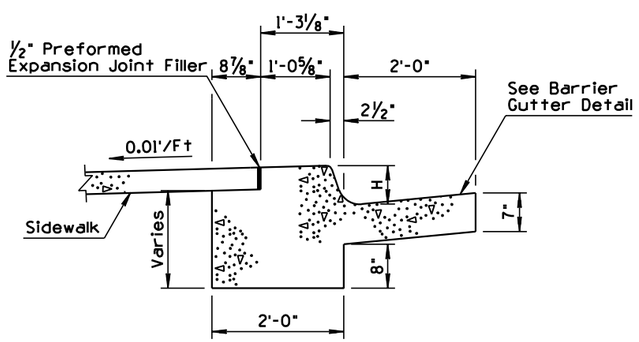

SECTION A-A

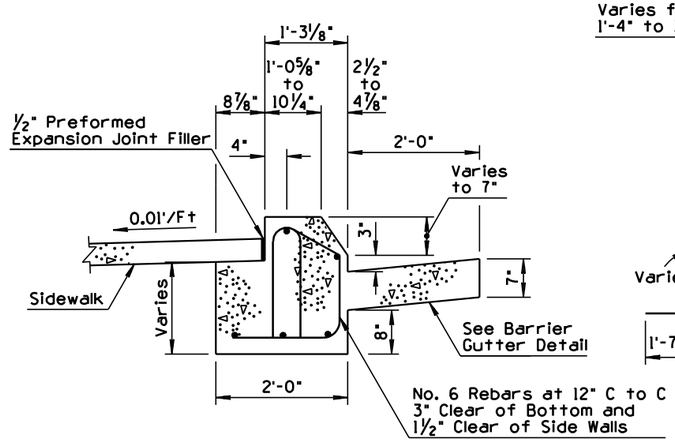

SECTION B-B

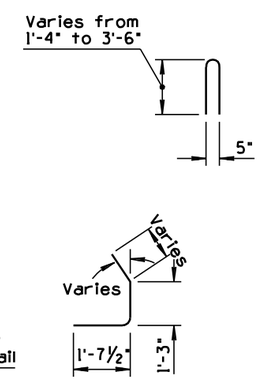

TRANSITION TO VERTICAL TYPE CURB

DESIGN APPROVED: Terry H. Otterness	STATE OF ARIZONA DEPARTMENT OF TRANSPORTATION DIVISION OF HIGHWAYS STANDARD DRAWINGS	REV. 8/99
APPROVED FOR DISTRIBUTION: Ronald C Williams	BARRIER TRANSITION 32" TYPE 'F' TANGENT DEPARTURE ① TYPE 1	DRAWING NO. C-10.75 Sheet 1 of 2

NO	DESCRIPTION OF REVISIONS	MADE BY	DATE
1	REVISED TO REFLECT 'F' SHAPE BARRIER	JNP	8/99
2			
3			
4			

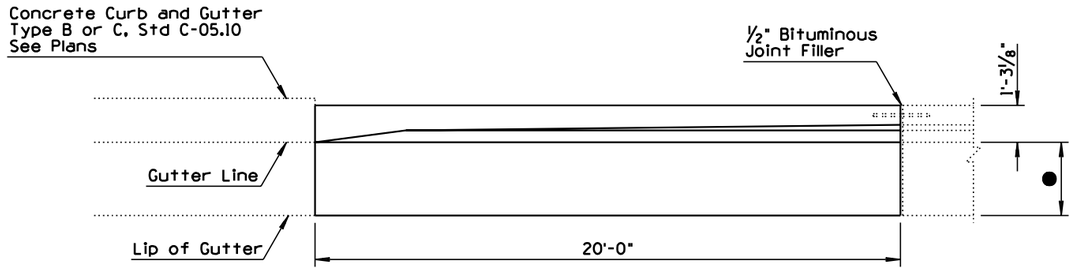

PLAN VIEW

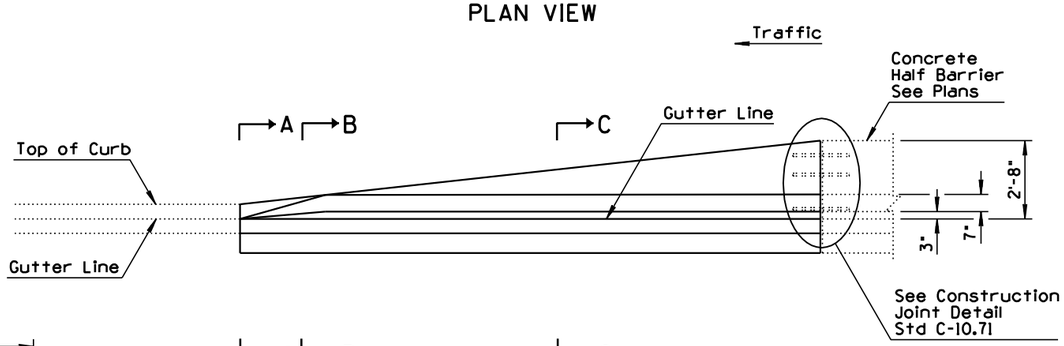

ELEVATION

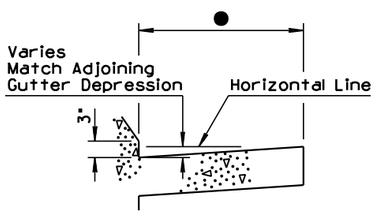

BARRIER GUTTER DETAIL

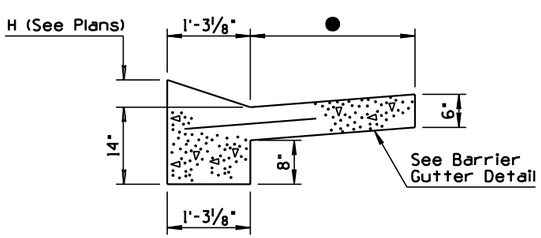

SECTION A-A

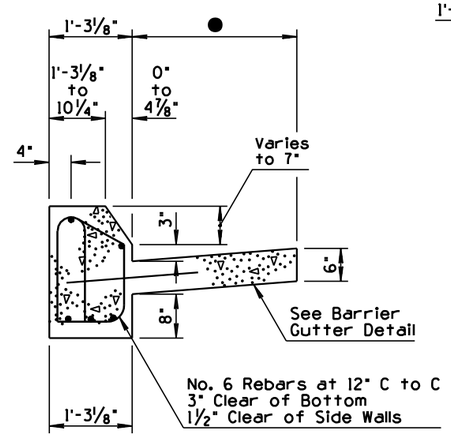

SECTION B-B

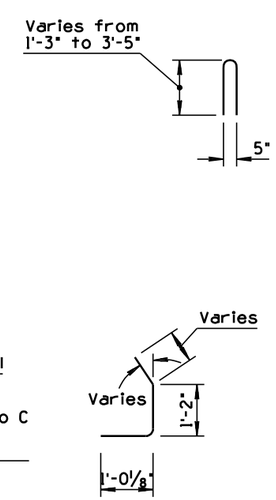

GENERAL NOTES

1. All concrete shall be Class "S" (f'c =3000 psi).
2. All reinforcing steel shall conform to Section 1003.
3. All reinforcing steel shall have 2" minimum clear cover unless otherwise noted.
4. See drainage sheets for slotted drain and catch basin details.
5. Barrier transition shall match both adjoining curb and gutter and concrete half barrier.
6. All bend dimensions for reinforcing steel shall be out-to-out of bars.
7. Two inch deep contraction joints shall be placed in the gutter at locations which match the joints in adjacent portland cement concrete pavement and at approximate 15 foot centers when adjacent to asphaltic concrete pavement. Joints shall be either hand tooled or sawed.

● Varies - 2'-6", 4'-6" or width as per plans.

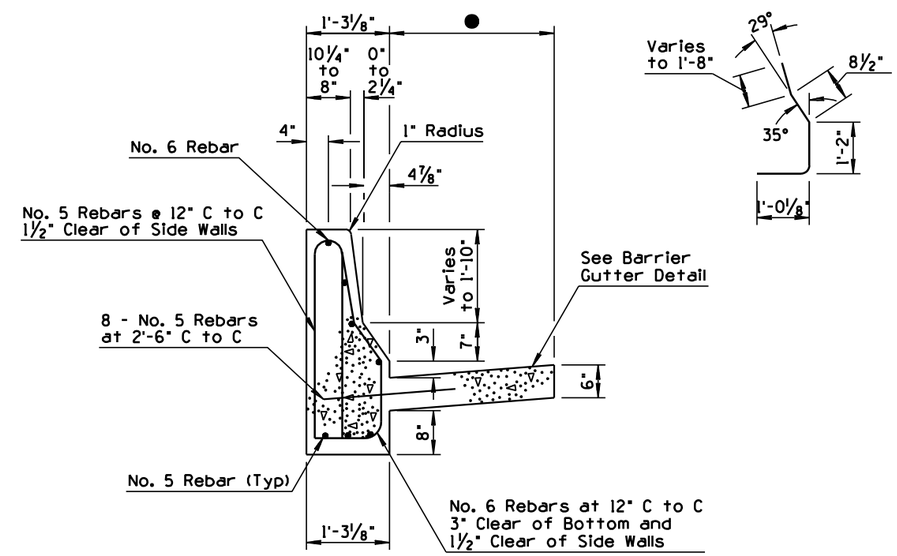

SECTION C-C

TRANSITION TO FREEWAY CURB

DESIGN APPROVED	STATE OF ARIZONA DEPARTMENT OF TRANSPORTATION DIVISION OF HIGHWAYS STANDARD DRAWINGS	REV.
Jerry H. Ottemas		8/99
APPROVED FOR DISTRIBUTION Ronald C. Williams	BARRIER TRANSITION 32" TYPE 'F' TANGENT DEPARTURE ① TYPE 2	DRAWING NO. C-10.75 Sheet 2 of 2

NO	DESCRIPTION OF REVISIONS	MADE BY	DATE
1	REVISED REBAR DIMENSIONS	PNB	10/95
2	REVISED NOTE	PNB	10/95
3	ADDED GENERAL NOTE	PNB	10/95
4			

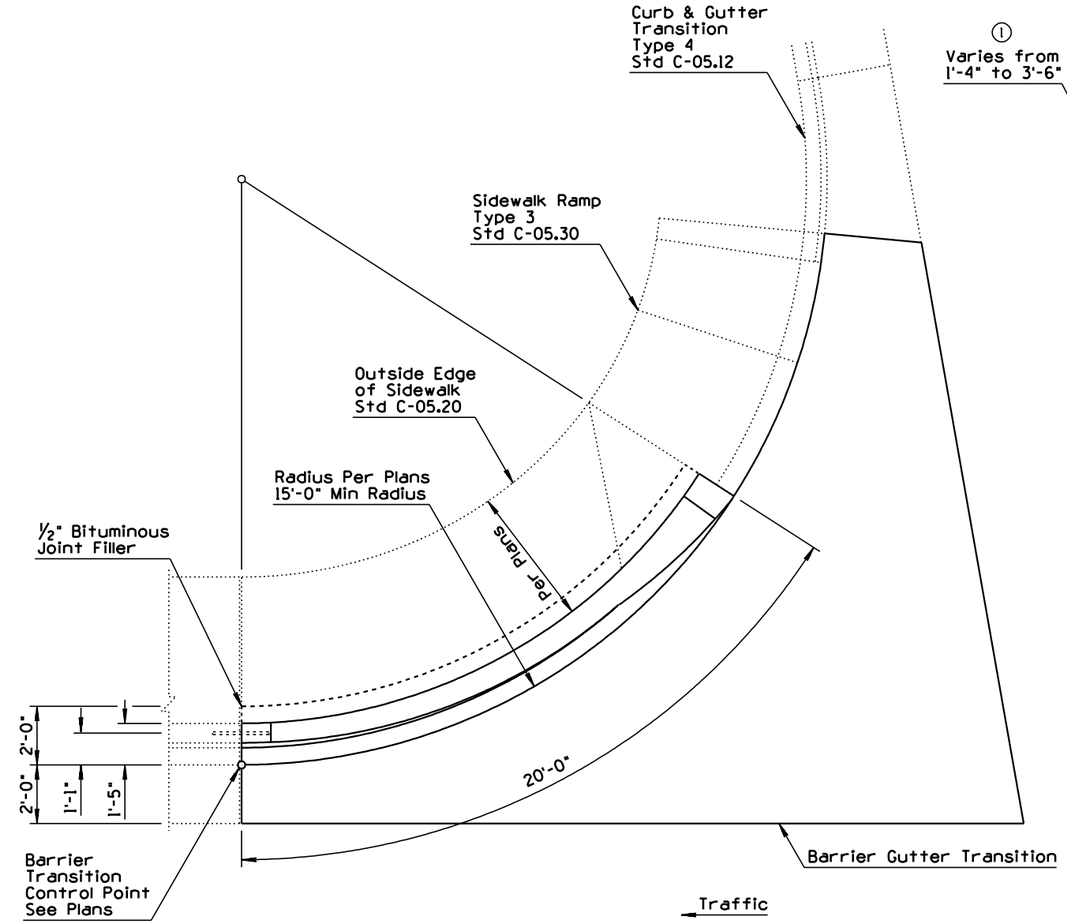

PLAN VIEW

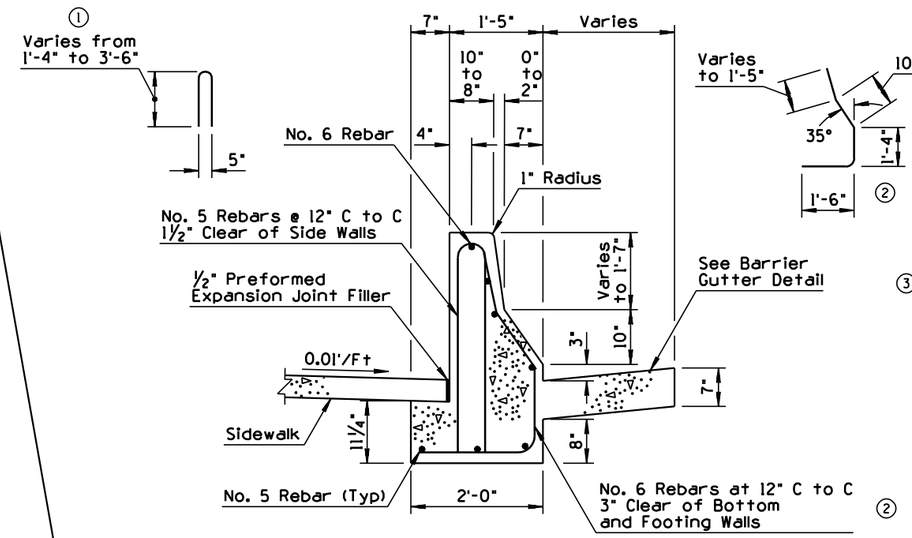

SECTION A-A

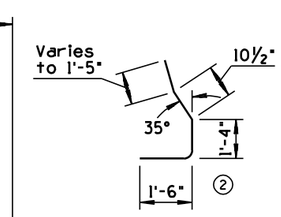

GENERAL NOTES

1. All concrete shall be Class "S" (f'c =3000 psi).
2. All reinforcing steel shall conform to Section 1003.
3. All reinforcing steel shall have 2" minimum clear cover unless otherwise noted.
4. See drainage sheets for slotted drain and catch basin details.
5. Barrier transition shall match the adjoining concrete half barrier.
6. See Std. C-05.20 for sidewalk construction.
7. All bend dimensions for reinforcing steel shall be out-to-out of bars. 3

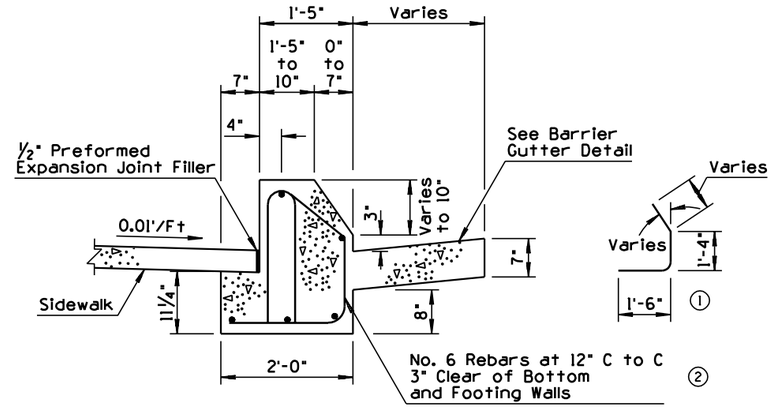

SECTION B-B

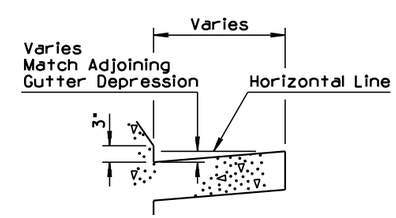

BARRIER GUTTER DETAIL

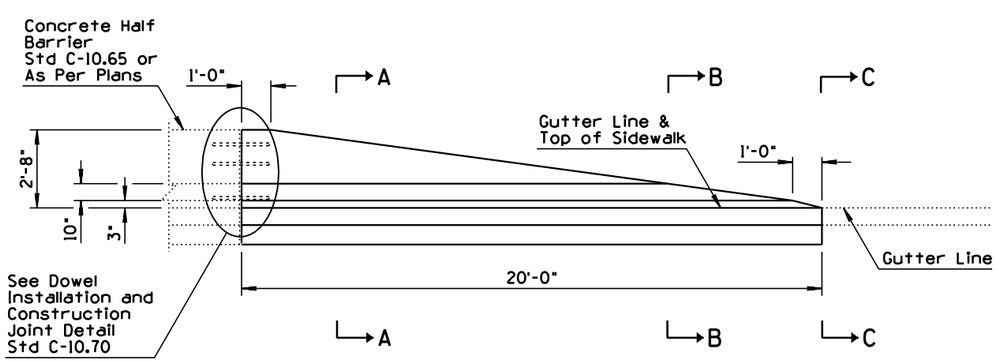

ELEVATION

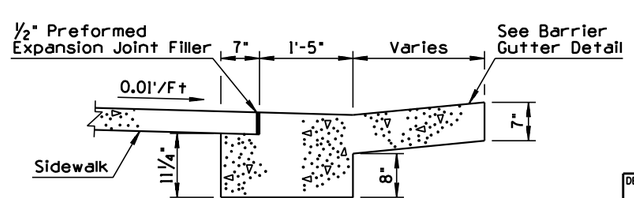

SECTION C-C

DESIGN APPROVED Terry H. Otterness	STATE OF ARIZONA DEPARTMENT OF TRANSPORTATION DIVISION OF HIGHWAYS STANDARD DRAWINGS	REV. 10/95
APPROVED FOR DISTRIBUTION Ronald C. Williams	BARRIER TRANSITION CURVE	DRAWING NO. C-10.76

NO	DESCRIPTION OF REVISIONS	MADE BY	DATE
1	NEW STANDARD DEVELOPED	JNP	8/99
2			
3			
4			

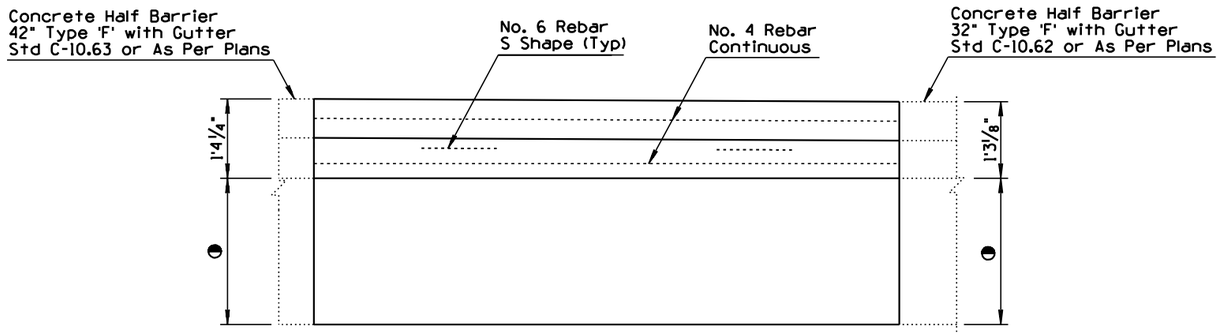

PLAN

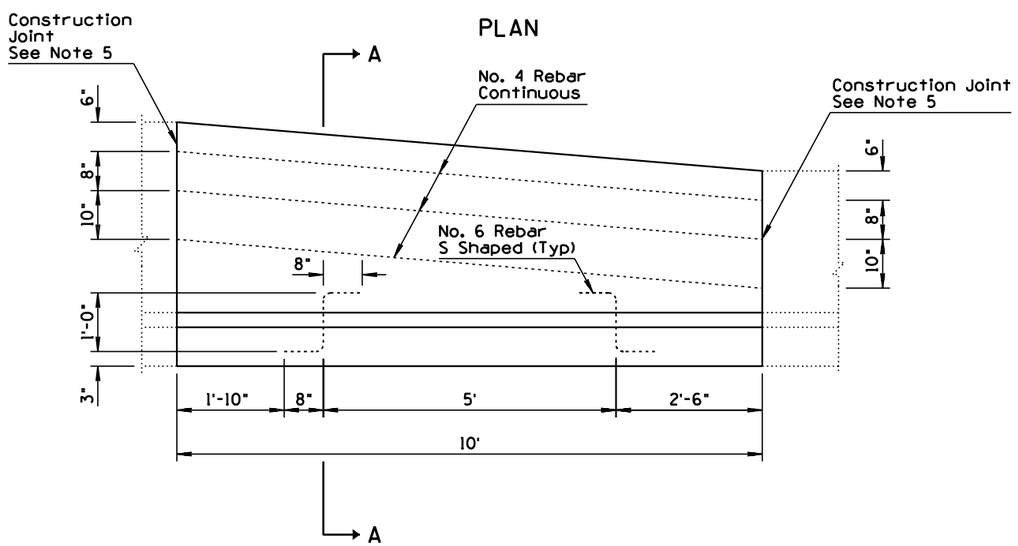

ELEVATION

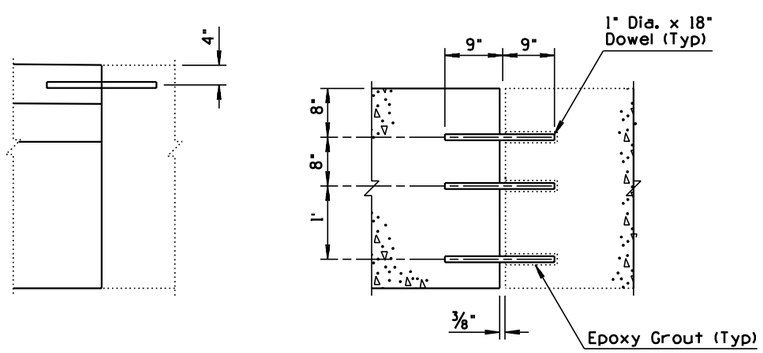

PLAN

ELEVATION

CONSTRUCTION JOINT DETAIL
(OPTIONAL)

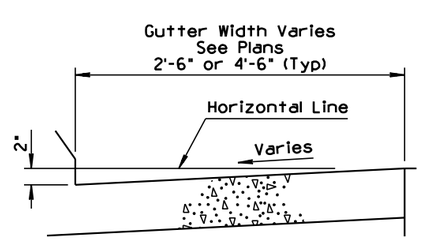

BARRIER GUTTER DETAIL

GENERAL NOTES

1. Half Barrier Transition shall be constructed by the formed Cast-In-Place method.
2. Concrete shall be Class S, design strength f'_c =3000 PSI.
3. If the footing and barrier are cast monolithically, No. 6 S shaped rebars will not be required.
4. In no case shall the width of barrier exceed the width of the barrier footing or overhang the adjacent pavement.
5. No. 4 Rebar shall extend 12" past the construction joint at the completion of the day's pour.
6. Thickness of footing, "D" can be adjusted to match the PCCP thickness, as approved by the Engineer.
7. Two inch deep contraction joints shall be placed in the gutter at locations which match the joints in adjacent portland cement concrete pavement and at approximate 15 foot centers when adjacent to asphaltic concrete pavement. Joints shall be either hand tooled or sawed.

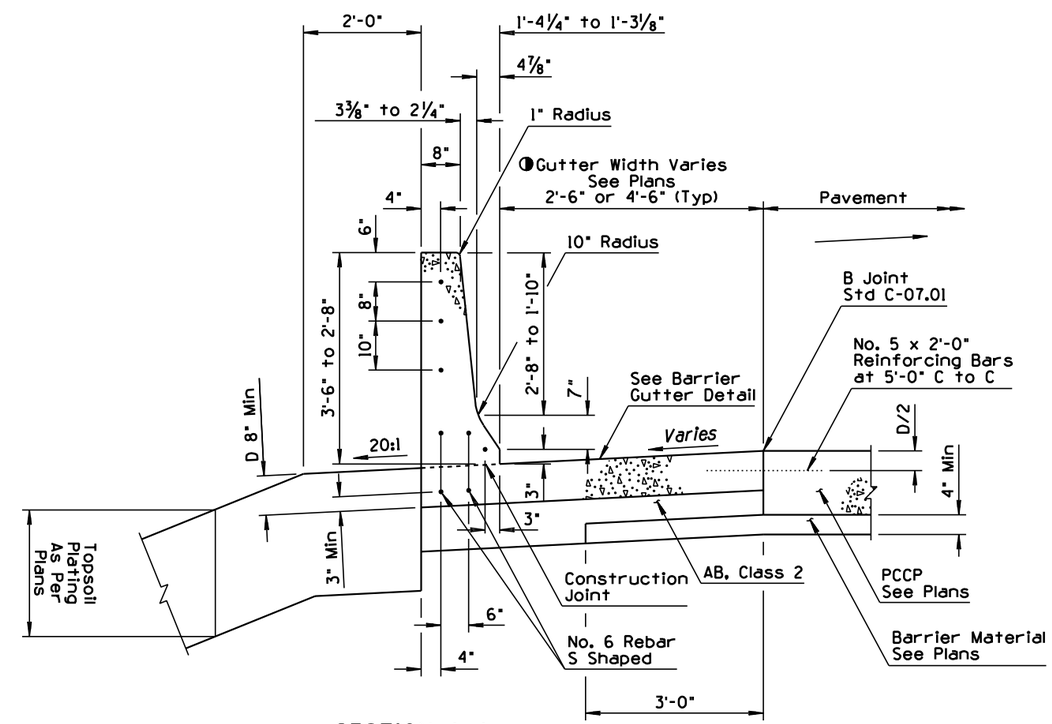

SECTION A-A

DESIGN APPROVED	STATE OF ARIZONA DEPARTMENT OF TRANSPORTATION DIVISION OF HIGHWAYS STANDARD DRAWINGS	REV.
APPROVED FOR DISTRIBUTION	CONCRETE HALF BARRIER TRANSITION TYPE 'F' TO TYPE 'F' (1) 42" TO 32"	DRAWING NO. C-10.86

NO	DESCRIPTION OF REVISIONS	MADE BY	DATE
1	MODIFIED STANDARD	PNB	3/94
2			
3			
4			

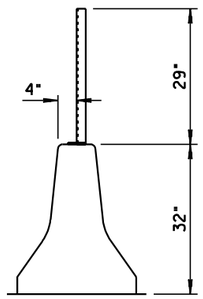

Glare Screen
Installation on
Standard Median Barrier

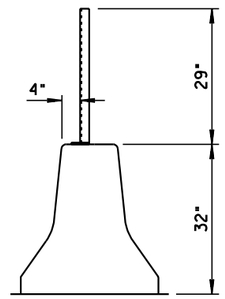

Glare Screen
Installation on
Median Barrier Transition

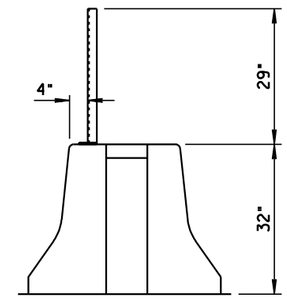

Glare Screen
Installation on
Half Barrier at Bridge Pier

GENERAL NOTES

1. Posts shall be 12'-6" C to C. Structural steel shall conform to ASTM-A-36, galvanized ASTM-A-123.
2. Hex head bolt shall conform to ASTM-A-307, galvanized ASTM-A-153 Class C.
3. Helical spring lock washer shall conform to ASTM-A-313, galvanized ASTM-A-153 Class C.
4. Tension wire: AWG No 9(0.148") galvanized to conform to ASTM-A-116 Class 2.
5. Hog ring: AWG No 12 (0.105") galvanized ASTM-A-116 Class 2. Fasten glare screen to top and bottom tension wire spaced approximately 2' apart.
6. Glare Screen: 18 Gauge steel. ASTM-A-526, galvanized ASTM-A-525/(G235), expanded to the following dimensions: 1.33" shortway of diamond and 4.0" longway of diamond (center to center of bridges) with a strand width of 0.250" angled at approximately 20° to the plane of the original sheet. Top edge to be shop curled and crimped on 12" centers. Glare screen shall be installed such that flat portion of screen blocks light from headlights. See Direction Detail.
7. Splices allowed in glare screen at posts only, with one full diamond overlap.
8. Glare screen shall be constructed without interruption to the greatest degree possible.

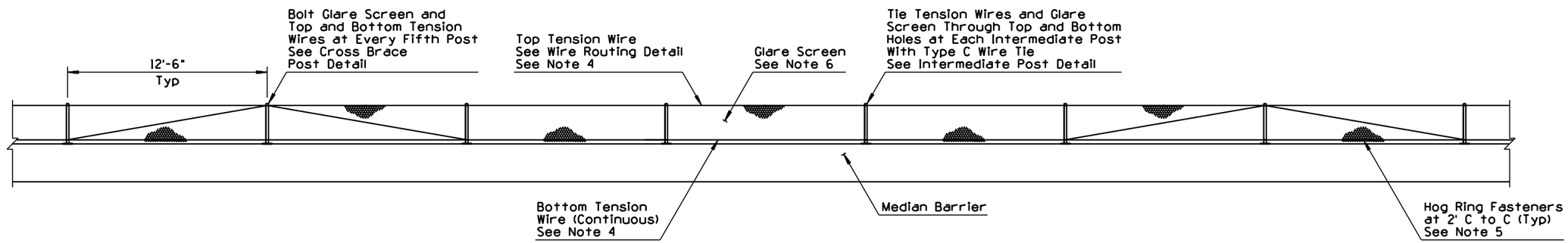

ELEVATION

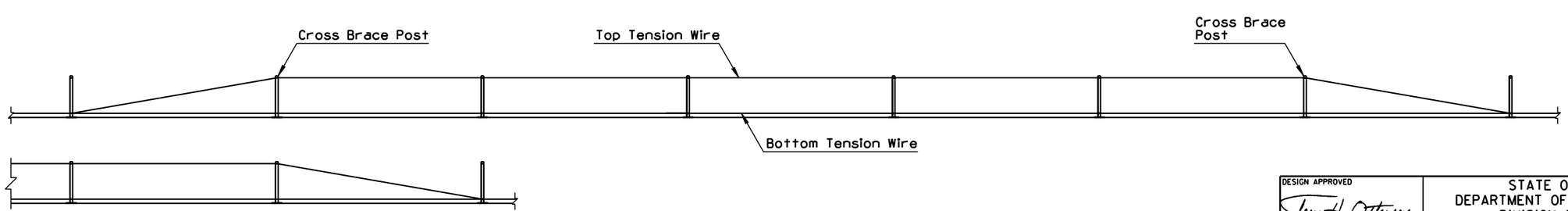

TENSION WIRE ROUTING DETAIL

DESIGN APPROVED Terry H. Otterness	STATE OF ARIZONA DEPARTMENT OF TRANSPORTATION DIVISION OF HIGHWAYS STANDARD DRAWINGS	REV. 3/94
APPROVED FOR DISTRIBUTION Ronald C Williams	① GLARE SCREEN CONCRETE MEDIAN BARRIER	DRAWING NO. C-10.97 Sheet 1 of 3

NO	DESCRIPTION OF REVISIONS	MADE BY	DATE
1	MODIFIED STANDARD & ADDED SHT 2	PNB	3/94
2			
3			
4			

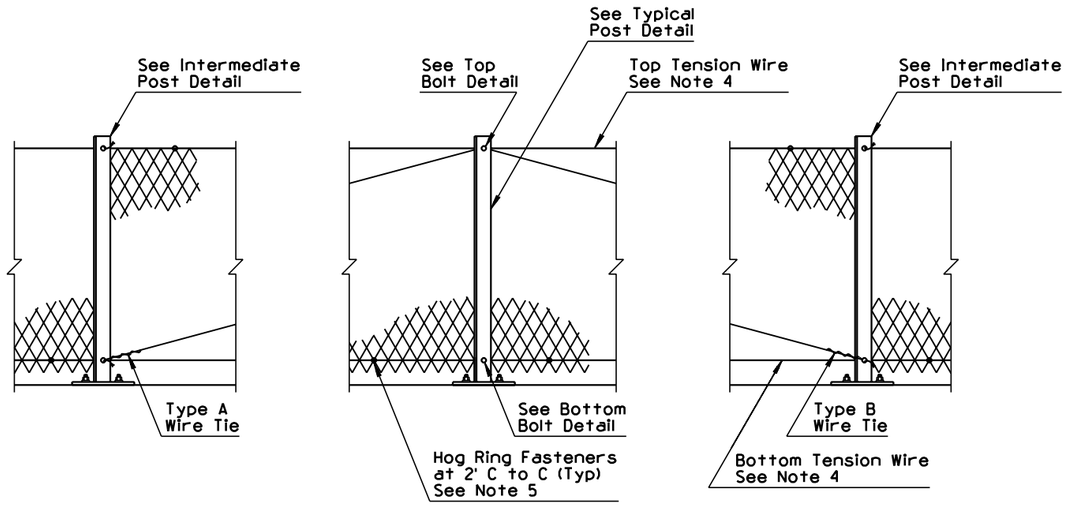

CROSS BRACE POST DETAIL

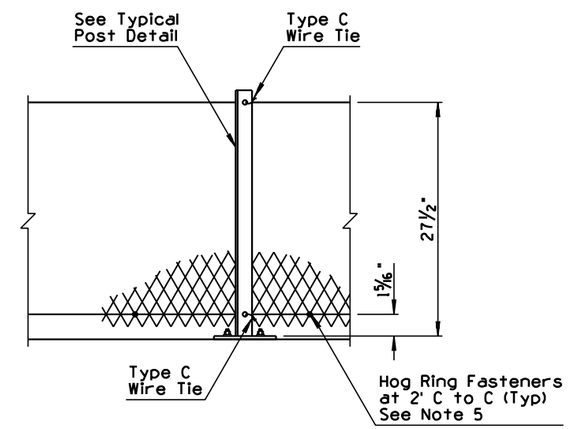

INTERMEDIATE POST DETAIL

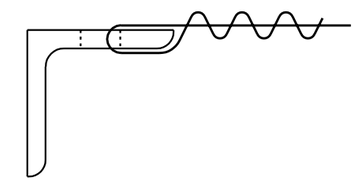

TYPE A WIRE TIE

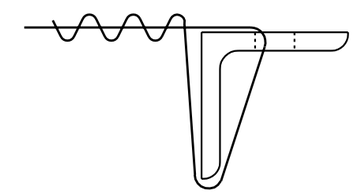

TYPE B WIRE TIE

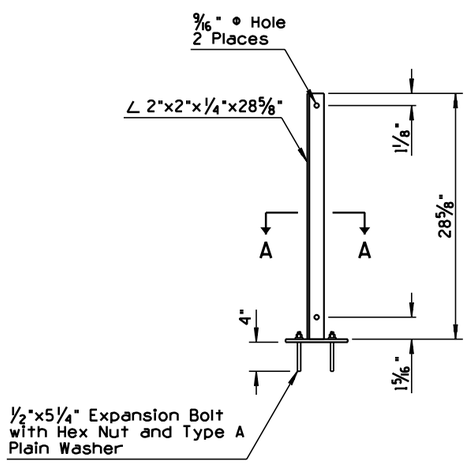

TYPICAL POST DETAIL

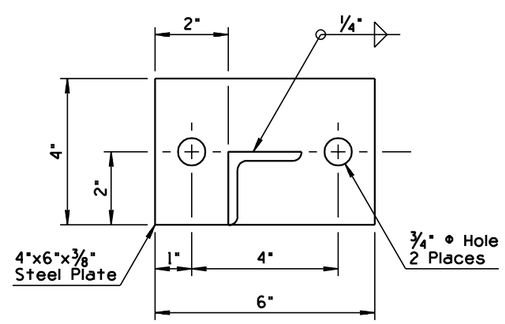

SECTION A-A

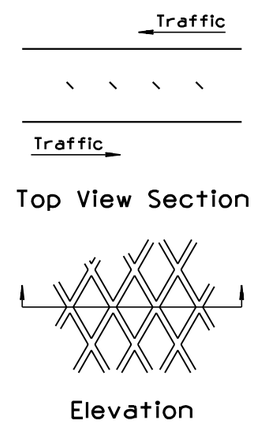

Top View Section

Elevation

DIRECTION DETAIL

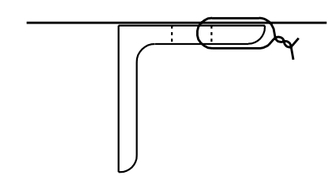

TYPE C WIRE TIE

DESIGN APPROVED Terry H. Otterness	STATE OF ARIZONA DEPARTMENT OF TRANSPORTATION DIVISION OF HIGHWAYS STANDARD DRAWINGS	REV. 3/94
APPROVED FOR DISTRIBUTION Ronald C Williams	① GLARE SCREEN CONCRETE MEDIAN BARRIER	DRAWING NO. C-10.97 Sheet 2 of 3

NO	DESCRIPTION OF REVISIONS	MADE BY	DATE
1	MODIFIED STANDARD & ADDED SHT 2	PNB	3/94
2			
3			
4			

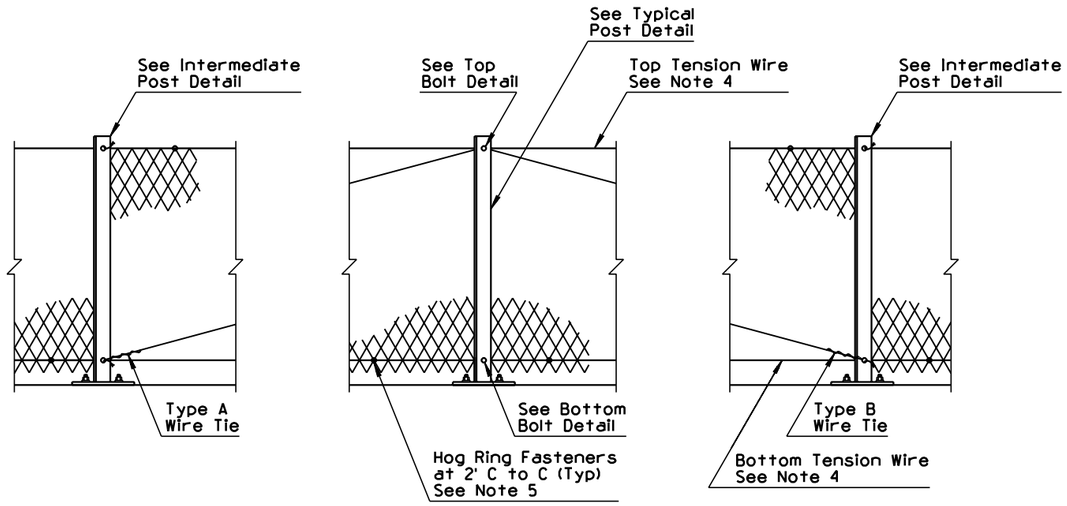

CROSS BRACE POST DETAIL

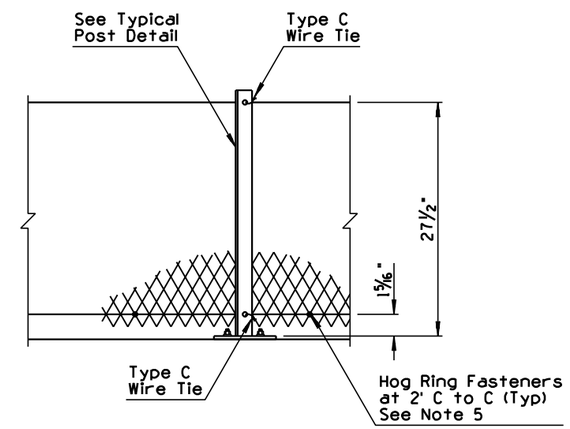

INTERMEDIATE POST DETAIL

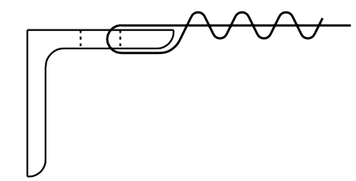

TYPE A WIRE TIE

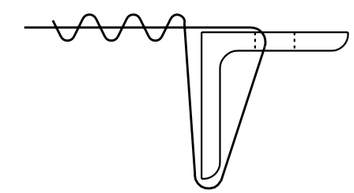

TYPE B WIRE TIE

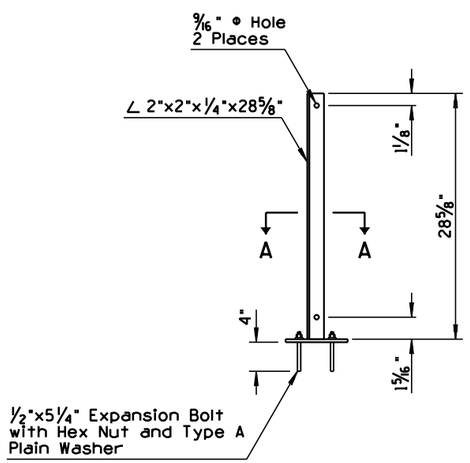

TYPICAL POST DETAIL

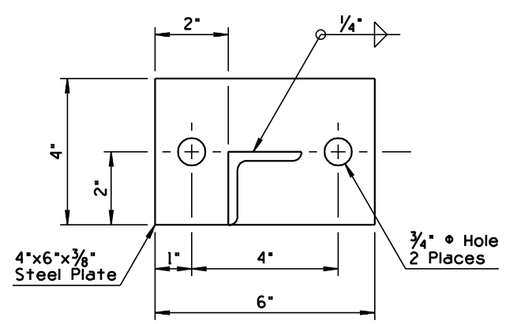

SECTION A-A

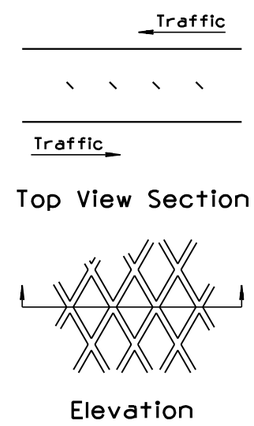

Top View Section

Elevation

DIRECTION DETAIL

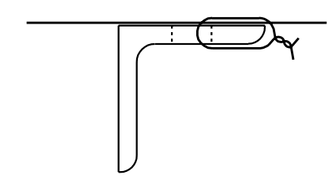

TYPE C WIRE TIE

DESIGN APPROVED Terry H. Otterness	STATE OF ARIZONA DEPARTMENT OF TRANSPORTATION DIVISION OF HIGHWAYS STANDARD DRAWINGS	REV. 3/94
APPROVED FOR DISTRIBUTION Ronald C Williams	① GLARE SCREEN CONCRETE MEDIAN BARRIER	DRAWING NO. C-10.97 Sheet 2 of 3

NO	DESCRIPTION OF REVISIONS	MADE BY	DATE
1	MODIFIED STANDARD & ADDED SHT 3	PNB	3/94
2	REVERSED BOLT	PNB	3/94
3	MOVED END GUY WIRE	PNB	3/94
4			

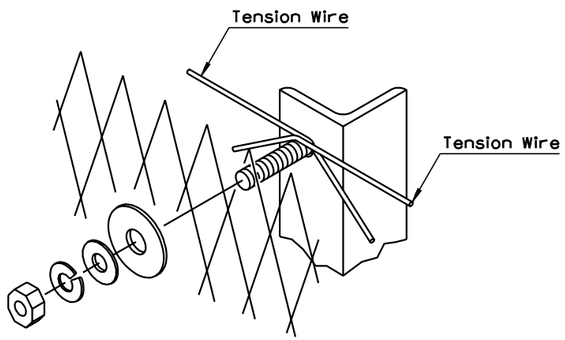

TOP BOLT DETAIL

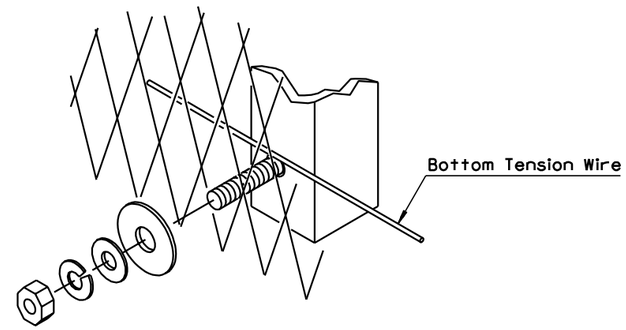

BOTTOM BOLT DETAIL

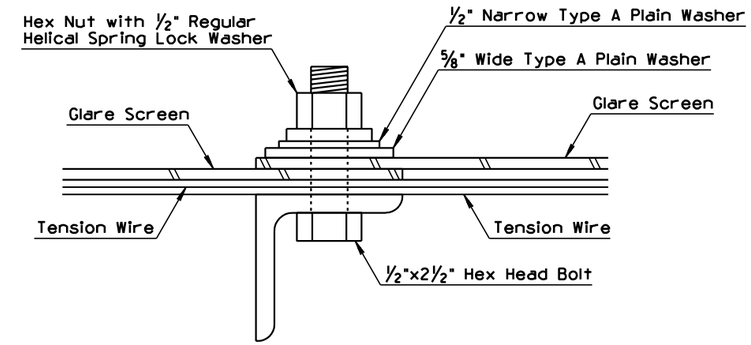

② TOP BOLT SECTION

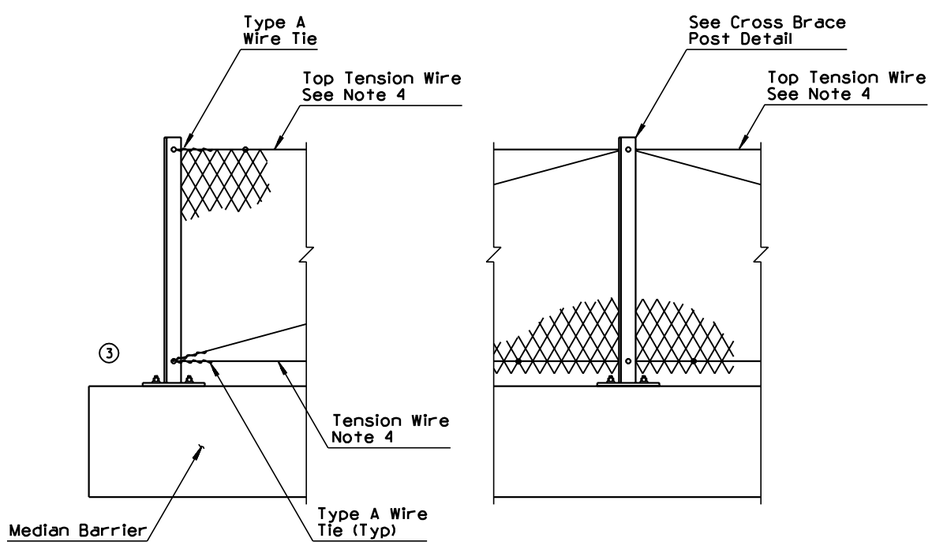

TERMINATION DETAIL

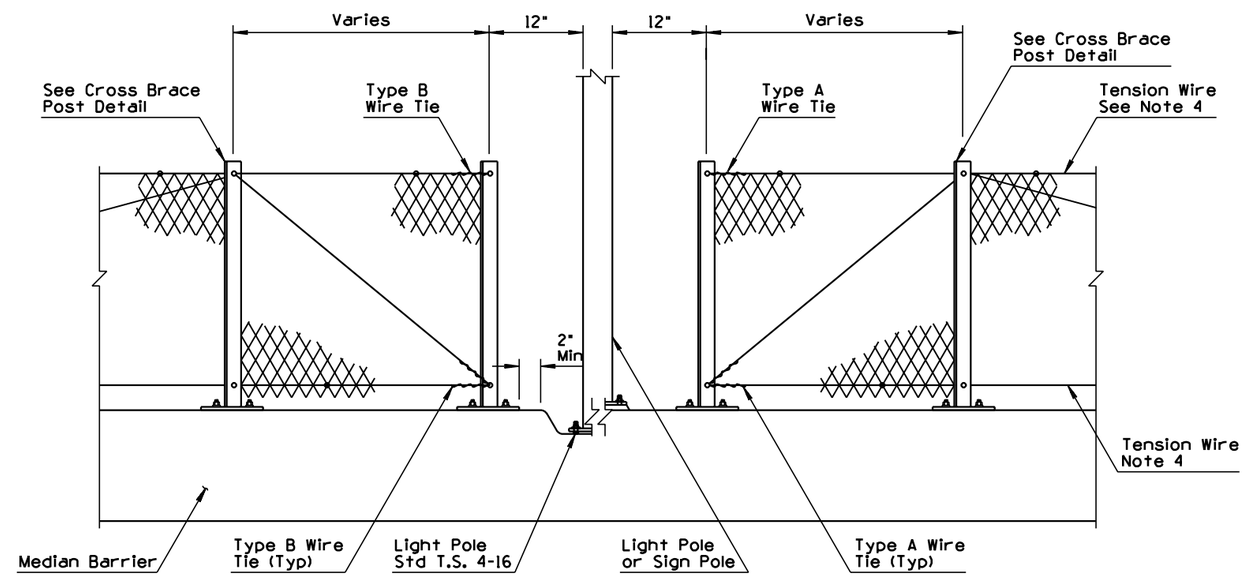

OBSTRUCTION DETAIL

DESIGN APPROVED Henry H. Otteman APPROVED FOR DISTRIBUTION Ronald C. Williams	STATE OF ARIZONA DEPARTMENT OF TRANSPORTATION DIVISION OF HIGHWAYS STANDARD DRAWINGS	REV. 3/94
	① GLARE SCREEN CONCRETE MEDIAN BARRIER	DRAWING NO. C-10.97 Sheet 3 of 3

NO	DESCRIPTION OF REVISIONS	MADE BY	DATE
1	ADDED DETAIL	PNB	7/94
2	DELETED NOTE	PNB	7/94
3	ADDED NOTE	PNB	7/94
4			

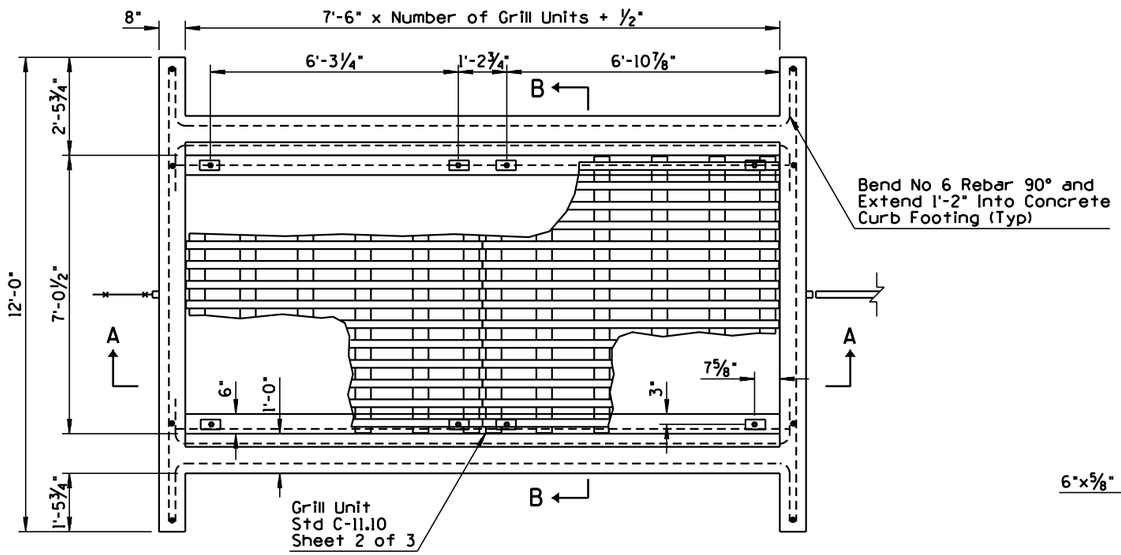

PLAN

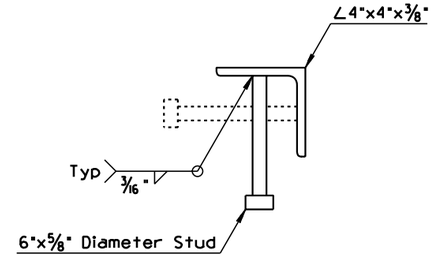

① ANGLE ASSEMBLY DETAIL NO. 1

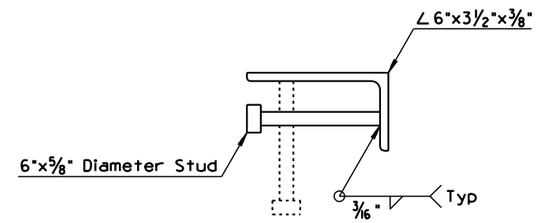

① ANGLE ASSEMBLY DETAIL NO. 2

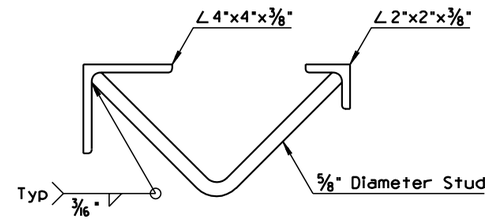

① ANGLE ASSEMBLY DETAIL NO. 3

GENERAL NOTES

② 1. Cattle guard shall be sloped to conform to the roadway grade and cross section, except that where an odd number of grill units is specified in a crowned roadway, the center grill unit shall have a level cross slope.

③ 2. Grill units shall be set on an angle assembly consisting of one 6"x3 1/2"x3/8" angle and 5/8" diameter studs with head. The studs shall be placed on 1'-0" alternate centers. See Angle Assembly Detail No. 2.

3. Where the adjacent roadway is paved, an angle assembly shall consist of one 4"x4"x3/8" angle and 5/8" diameter studs with head. The studs shall be placed on 1'-0" alternate centers. See Angle Assembly Detail No. 1.

4. Where the adjacent roadway is unpaved, an angle assembly shall consist of one 4"x4"x3/8" angle and one 2"x2"x3/8" angle and connected with 5/8" diameter studs. The assembly shall be crowned at the centerline and constructed with a bevel cut and welded. The studs shall be bent 90° and placed on 1'-0" centers. See Angle Assembly Detail No. 3.

5. Each angle and angle assembly shall be fabricated to form a single piece for the full length of the cattle guard.

6. Quantities shown for concrete and reinforcing bars are to be considered approximations for informational purposes only.

7. When guard rail is to be used at the cattle guard, it may be possible to reduce the number of grill units required.

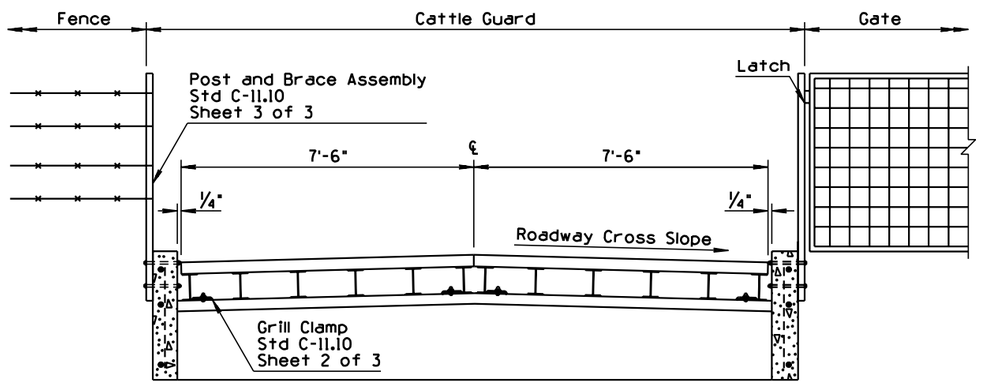

SECTION A-A

UNIT TABLE			
Roadway Width (Feet)	Grill Units Required	Concrete Cubic Yards	Rebar Lbs
12	2	5.8	173.3
16	3	8.0	240.9
20	4	10.3	308.5
28	5	12.5	376.1
34	6	14.7	443.7
36	6	14.7	443.7
38	7	16.9	511.2
40	7	16.9	511.2

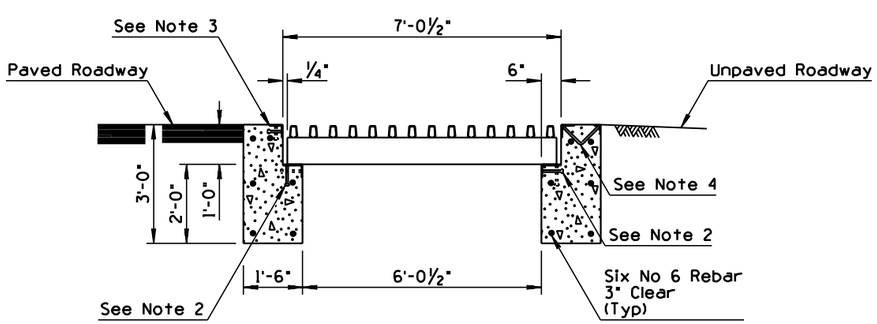

SECTION B-B

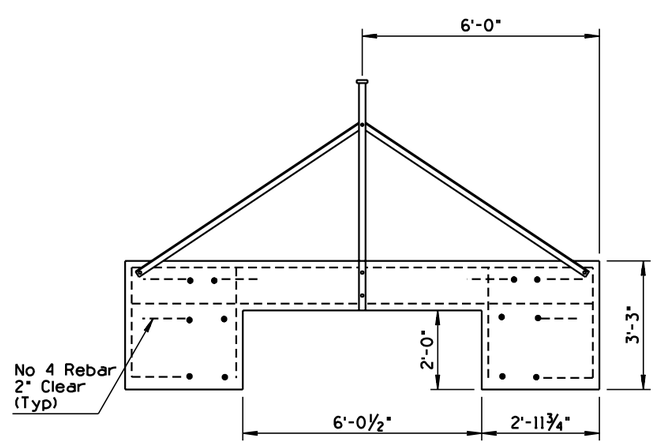

END VIEW

DESIGN APPROVED	STATE OF ARIZONA DEPARTMENT OF TRANSPORTATION DIVISION OF HIGHWAYS STANDARD DRAWINGS	REV. 7/94
APPROVED FOR DISTRIBUTION	ROADWAY CATTLE GUARD	DRAWING NO. C-11.10 Sheet 1 of 3

NO	DESCRIPTION OF REVISIONS	MADE BY	DATE
1	FROM OLD STD C-11.11	PNB	7/94
2			
3			
4			

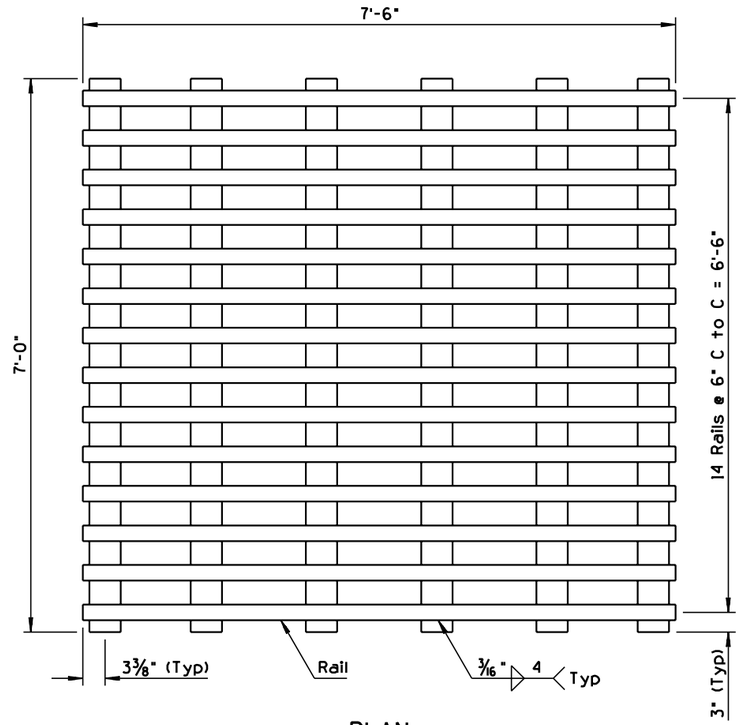

PLAN

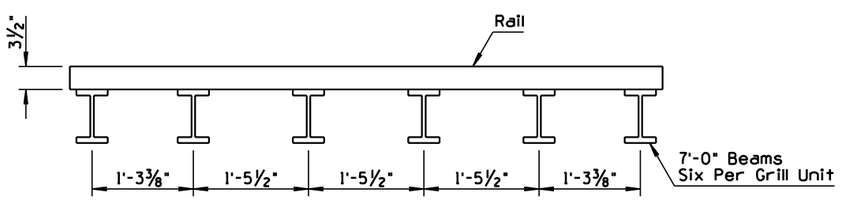

ELEVATION

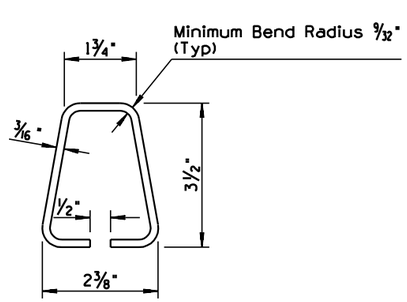

RAIL
GRILL UNIT

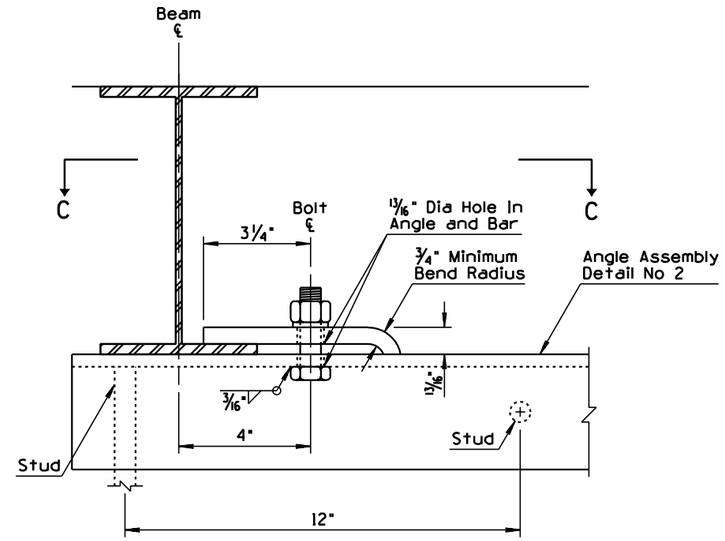

GRILL CLAMP

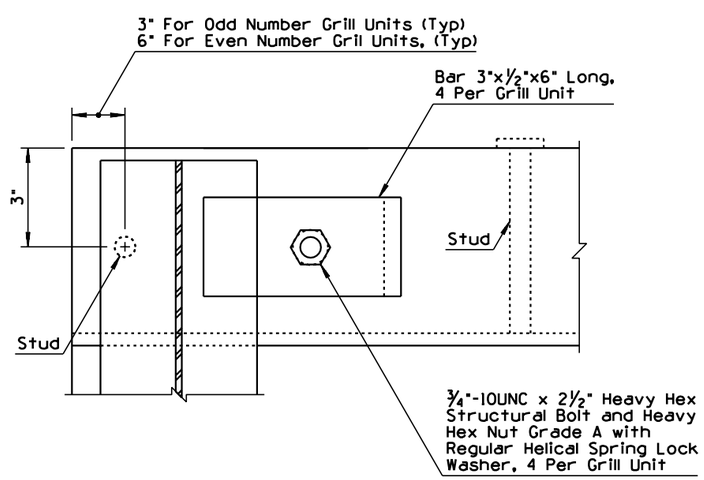

SECTION C-C

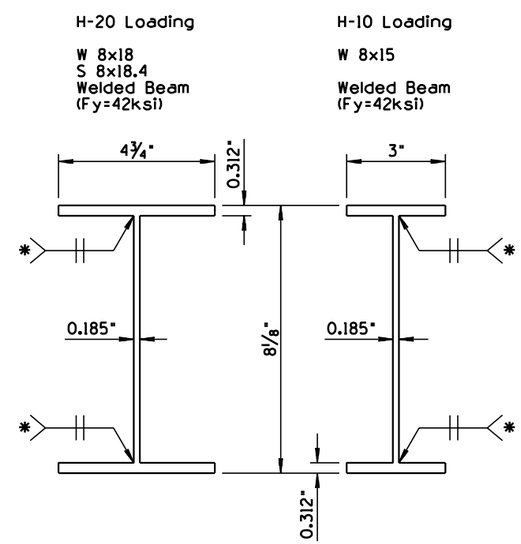

BEAMS

DESIGN APPROVED Terry H. Otterness	STATE OF ARIZONA DEPARTMENT OF TRANSPORTATION DIVISION OF HIGHWAYS STANDARD DRAWINGS	REV. 7/94
APPROVED FOR DISTRIBUTION Ronald C Williams	① ROADWAY CATTLE GUARD	DRAWING NO. C-11.10 Sheet 2 of 3

NO	DESCRIPTION OF REVISIONS	MADE BY	DATE
1	CORRECTED SPELLING OF "SUBBASE"	PNB	10/95
2			
3			
4			

GENERAL NOTES

(1) 1. Material for shoulder transition shall be placed to the finished roadway elevation for the entire length of the transition. When the roadway is paved, Aggregate Subbase or Aggregate Base shall be used. When Roadway is unpaved, a material equivalent to the existing roadway shall be used.

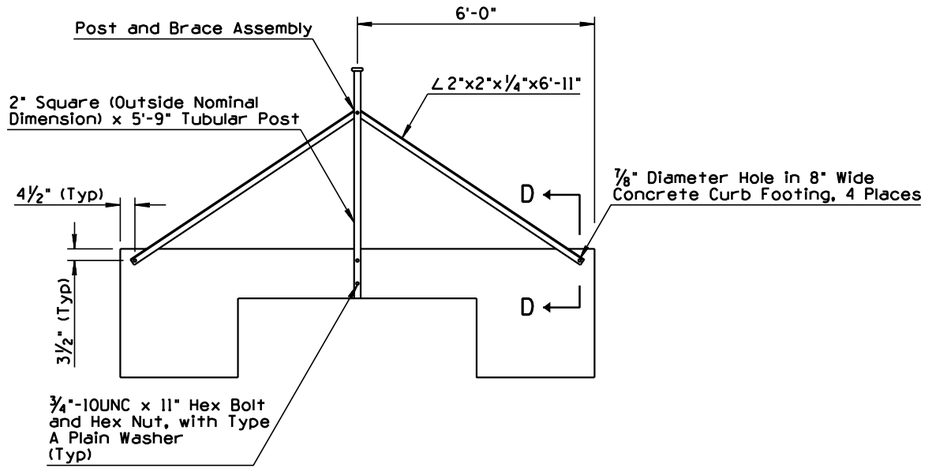

END VIEW

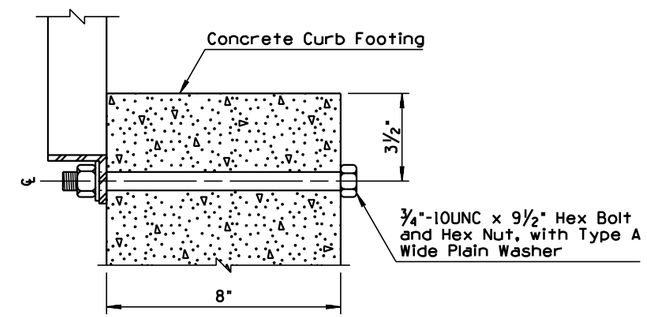

SECTION D-D

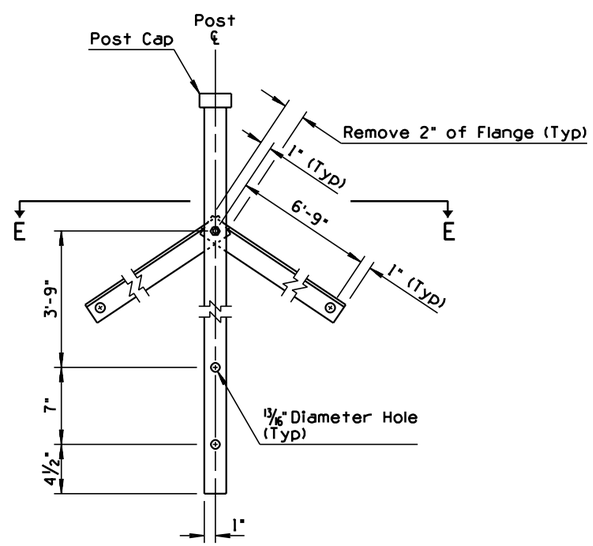

POST AND BRACE ASSEMBLY

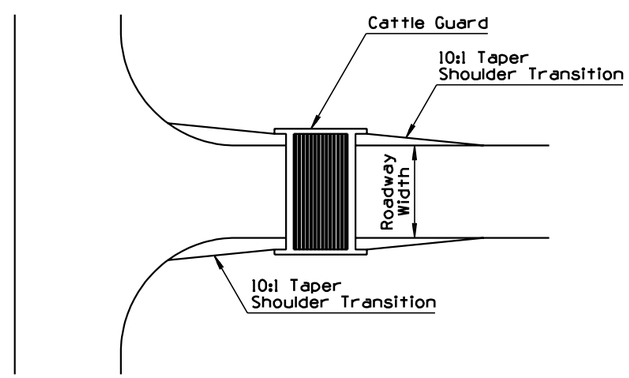

SHOULDER TRANSITION AT CATTLE GUARDS

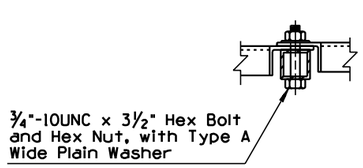

SECTION E-E

DESIGN APPROVED Henry H. Otteman	STATE OF ARIZONA DEPARTMENT OF TRANSPORTATION DIVISION OF HIGHWAYS STANDARD DRAWINGS	REV. 10/95
APPROVED FOR DISTRIBUTION Ronald C. Williams	ROADWAY CATTLE GUARD	DRAWING NO. C-11.10 Sheet 3 of 3

NO	DESCRIPTION OF REVISIONS	MADE BY	DATE
1	MODIFIED NOTE	PNB	7/94
2			
3			
4			

GENERAL NOTES

1. See Std C-11.10 for all other Cattle Guard details.
2. This standard shall be used in embamkment or where highly erodable soil is found.
3. All concrete shall be Class B.

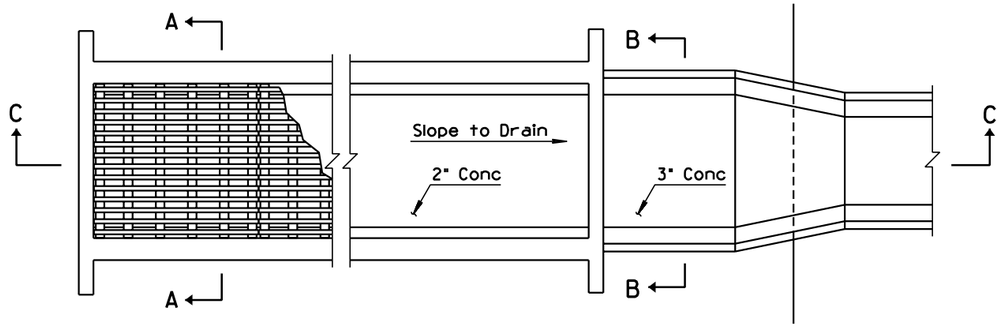

PLAN

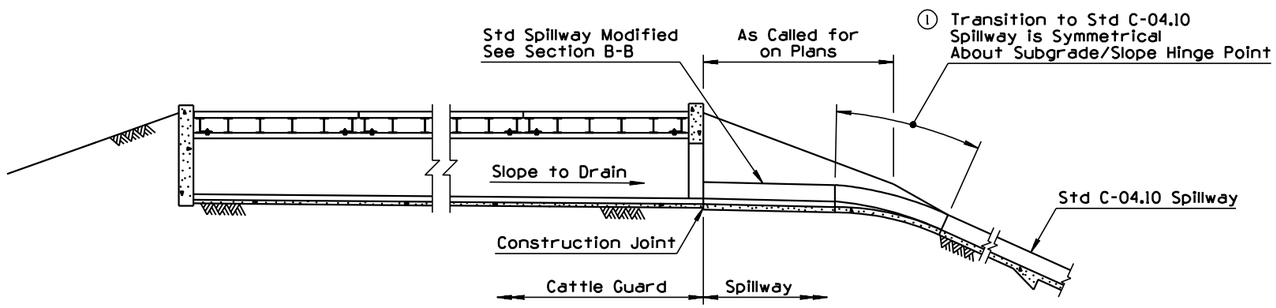

SECTION C-C
IN EMBANKMENT

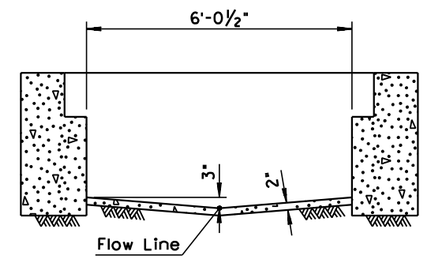

SECTION A-A

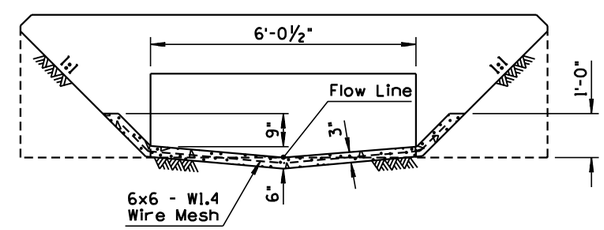

SECTION B-B

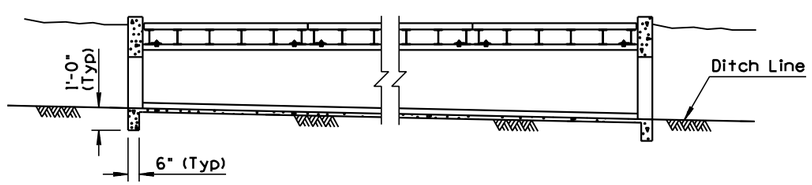

SECTION C-C
WHERE USED FOR THRU DRAINAGE-
CATTLE GUARD OPEN BOTH ENDS

DESIGN APPROVED Terry H. Otterness	STATE OF ARIZONA DEPARTMENT OF TRANSPORTATION DIVISION OF HIGHWAYS STANDARD DRAWINGS	REV. 7/94
APPROVED FOR DISTRIBUTION Ronald C Williams	CATTLE GUARD, DRAINAGE	DRAWING NO. C-11.20

NO	DESCRIPTION OF REVISIONS	MADE BY	DATE
1	REARRANGED STD	PNB	7/94
2			
3			
4			

GENERAL NOTES

1. This design applicable only to wood tie track construction. Wood shims shall be unpainted and cut from material meeting the specifications of the existing ties.
2. 3"x3"x3/16" treads, 2"x1/2" bearing bars and 2" nominal diameter pipe wing assemblies shall be primed with one coat of No. 1 paint and finished with two coats of yellow enamel paint.

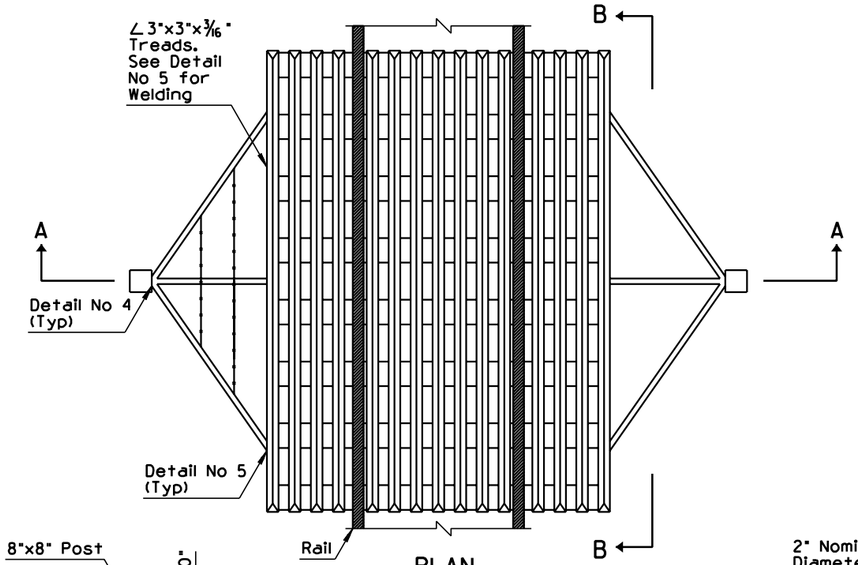

PLAN

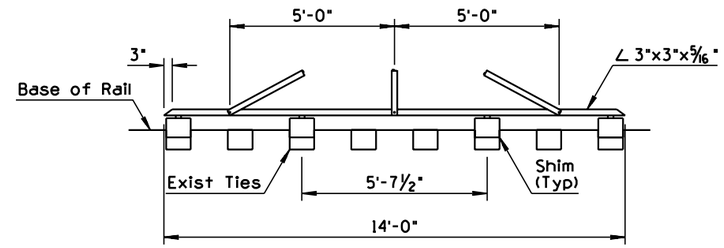

SECTION B-B

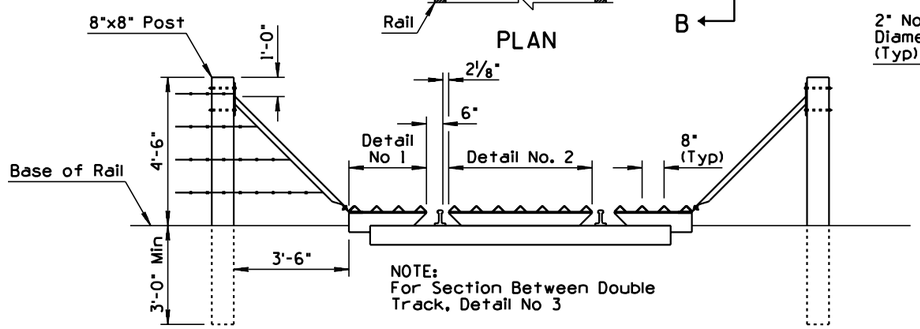

SECTION A-A

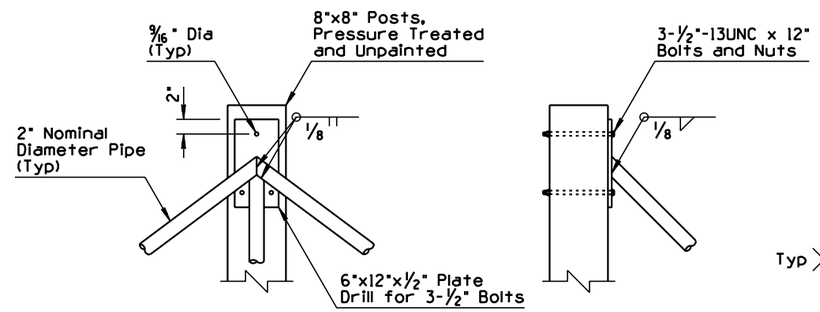

DETAIL NO. 4

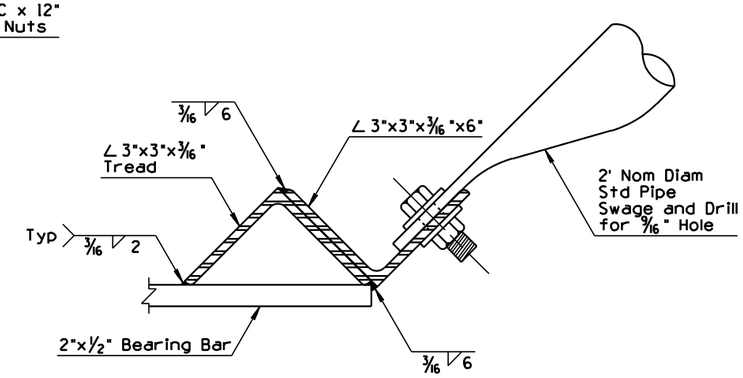

DETAIL NO. 5

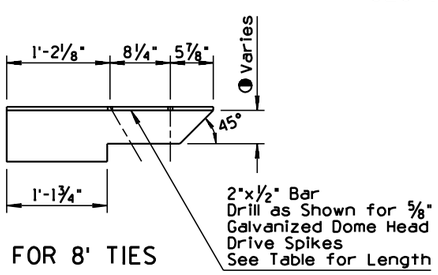

FOR 8' TIES

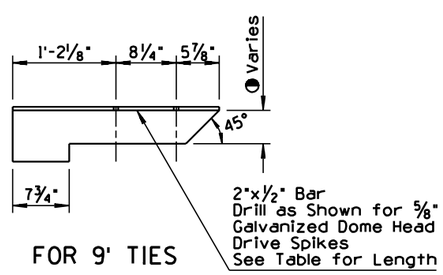

FOR 9' TIES

DETAIL NO. 1

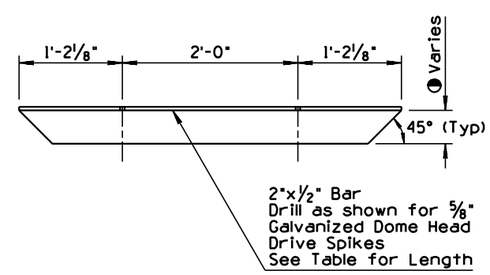

DETAIL NO. 2

◐ SHIM HEIGHT						
RAIL LBS/YD						
80	90	110	115	119	131	150
2 1/4"	2 7/8"	3 1/2"	3 7/8"	4 1/16"	4 3/8"	4 9/16"
5/8" DIAMETER GALVANIZED DOME HEAD SPIKE LENGTH						
11"	11"	11"	11"	13"	13"	13"

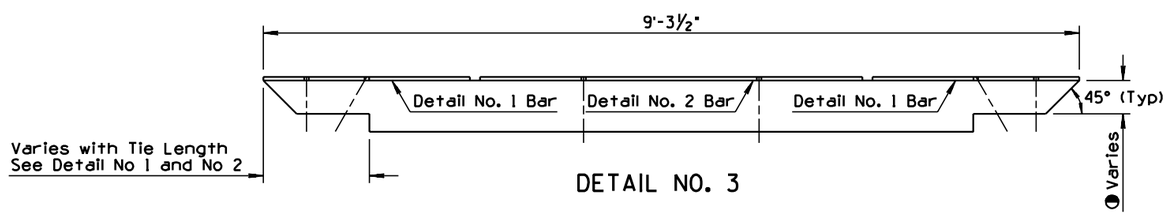

DETAIL NO. 3

DESIGN APPROVED Terry H. Otterness	STATE OF ARIZONA DEPARTMENT OF TRANSPORTATION DIVISION OF HIGHWAYS STANDARD DRAWINGS	REV. 7/94
APPROVED FOR DISTRIBUTION Ronald C Williams	① CATTLE GUARD, RAILROAD	DRAWING NO. C-11.30

NO	DESCRIPTION OF REVISIONS	MADE BY	DATE
1	ADDED ASTM CALLOUT	PNB	7/94
2			
3			
4			

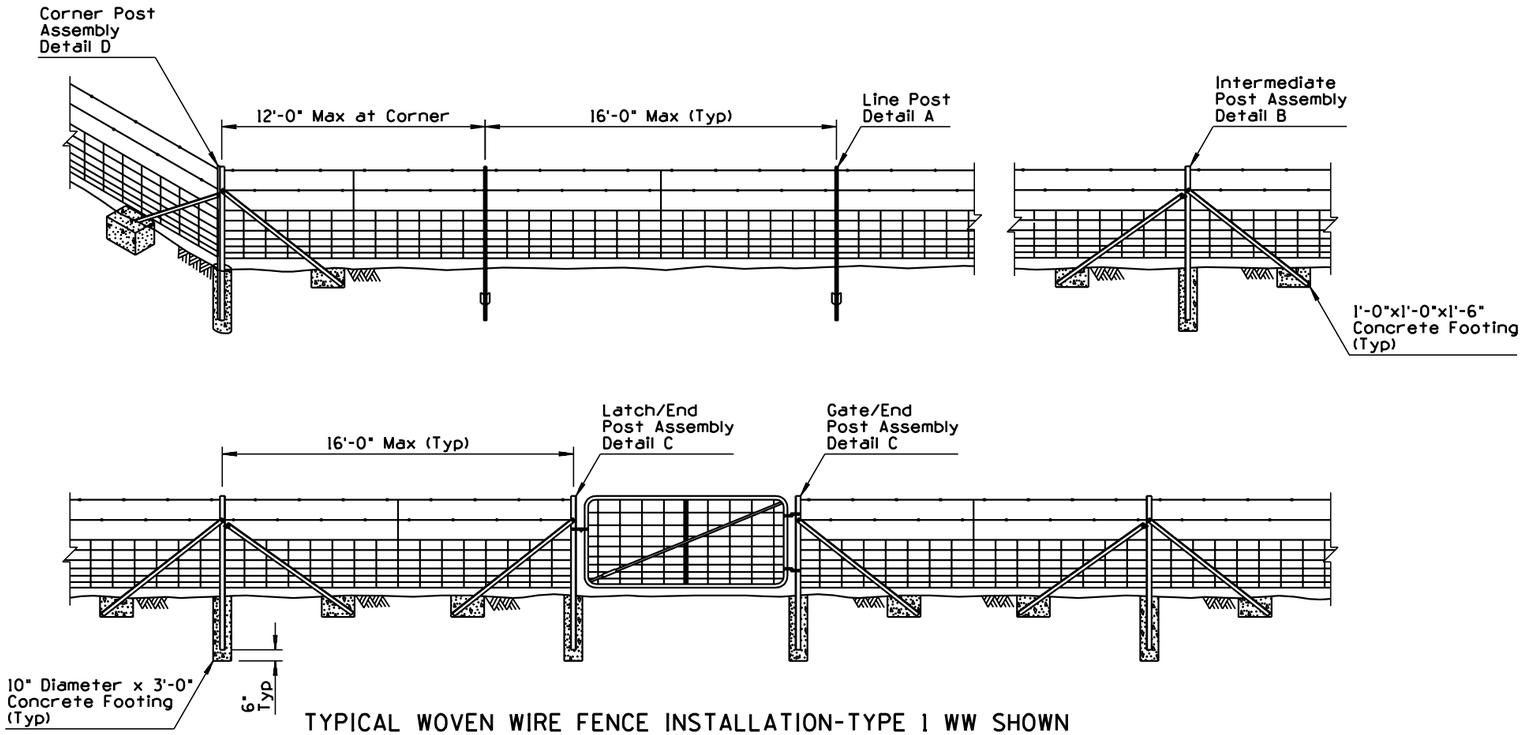

TYPICAL WOVEN WIRE FENCE INSTALLATION-TYPE 1 WW SHOWN

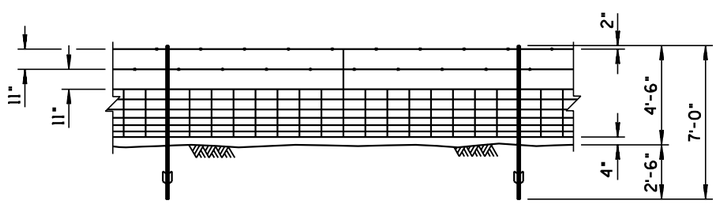

TYPE 1 WOVEN WIRE (WW)

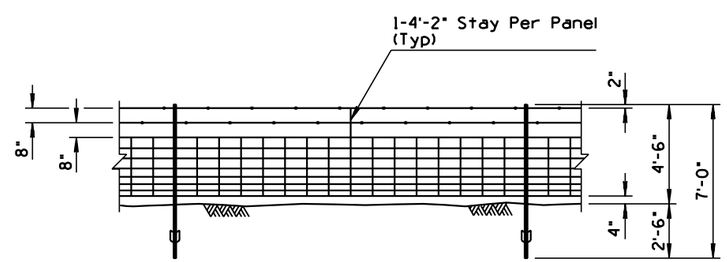

TYPE 2 WOVEN WIRE (WW)

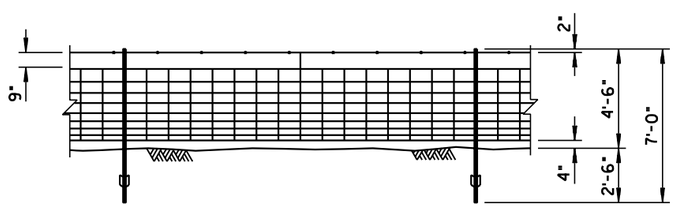

TYPE 3 WOVEN WIRE (WW)

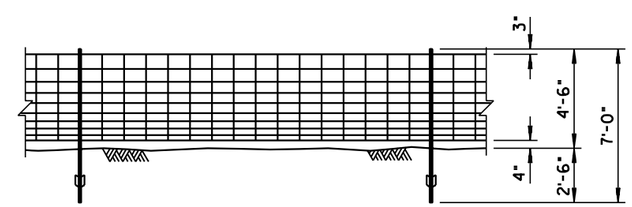

TYPE 4 WOVEN WIRE (WW)

GENERAL NOTES

1. Length of post and braces shall not be less than 7'-0".
2. Woven wire fence fabric shall be attached to the post at the top, bottom, and intermediate wires.
3. Intermediate Post Assemblies shall be located as shown and at intervals to utilize standard rolls to minimize cutting and waste.
4. A twisted wire stay shall be centered between posts.

(1) ◑ ASTM design number

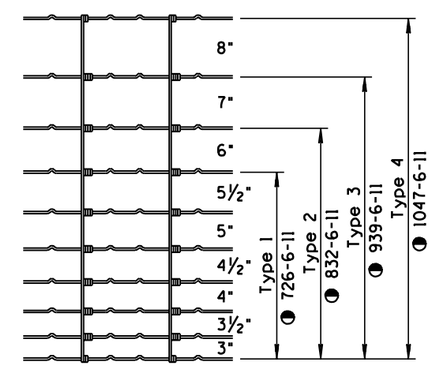

FENCE FABRIC DIMENSIONS AND DESIGN NUMBERS

DESIGN APPROVED Henry H. Otteman	STATE OF ARIZONA DEPARTMENT OF TRANSPORTATION DIVISION OF HIGHWAYS STANDARD DRAWINGS	REV. 7/94
APPROVED FOR DISTRIBUTION Ronald C. Williams	FENCE, WOVEN WIRE	DRAWING NO. C-12.10 Sheet 1 of 5

NO	DESCRIPTION OF REVISIONS	MADE BY	DATE
1	REISSUE STD	PNB	7/94
2			
3			
4			

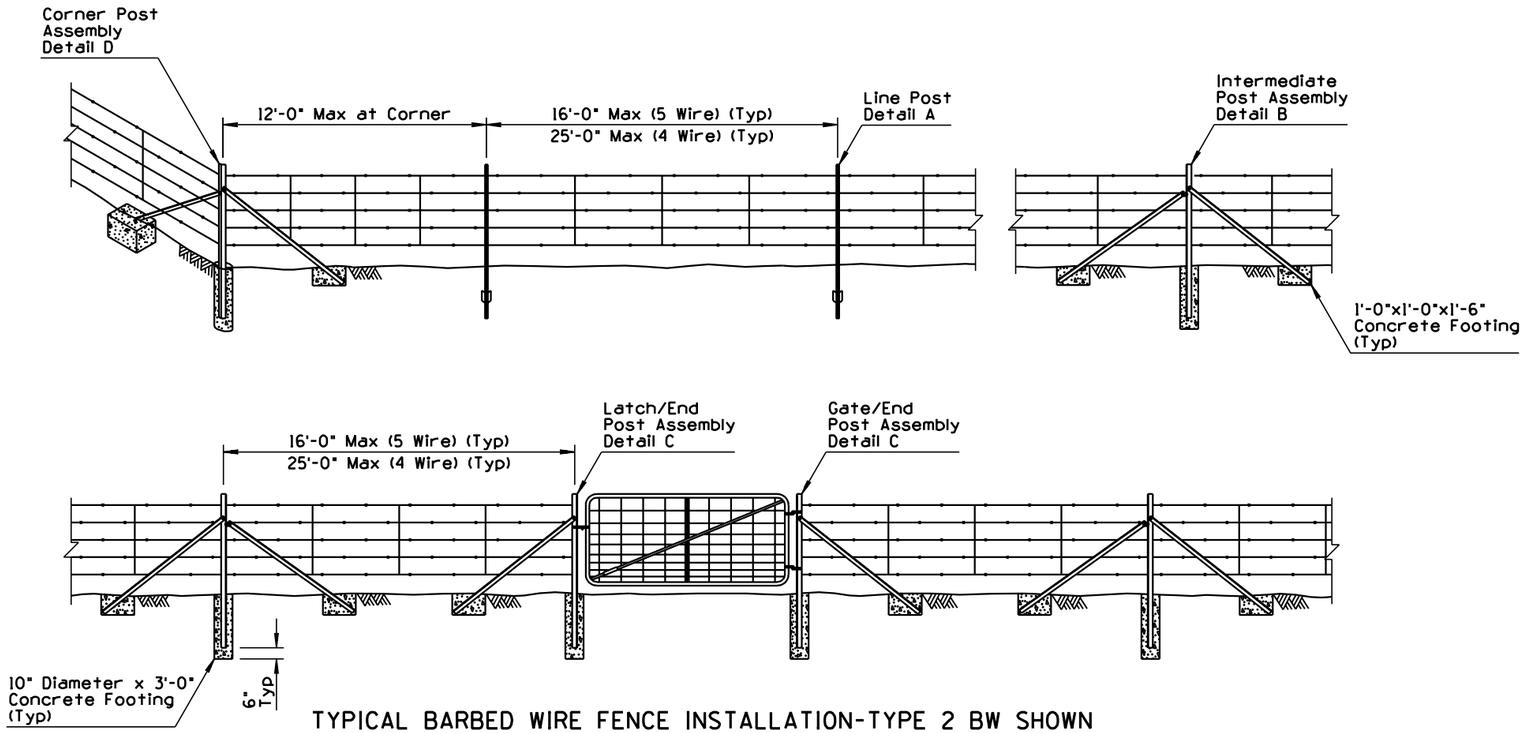

TYPICAL BARBED WIRE FENCE INSTALLATION-TYPE 2 BW SHOWN

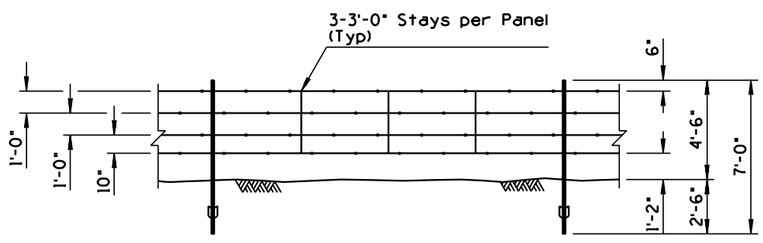

TYPE 1 BARBED WIRE (BW) (4 WIRE)

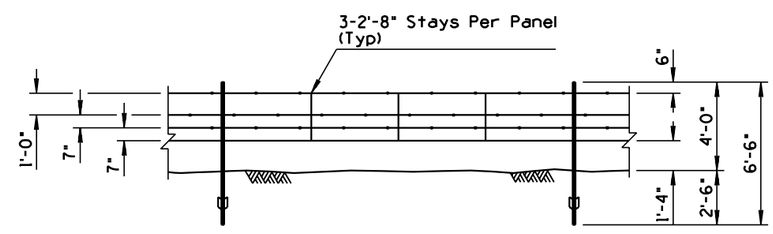

BARBED WIRE GAME FENCE (GF)

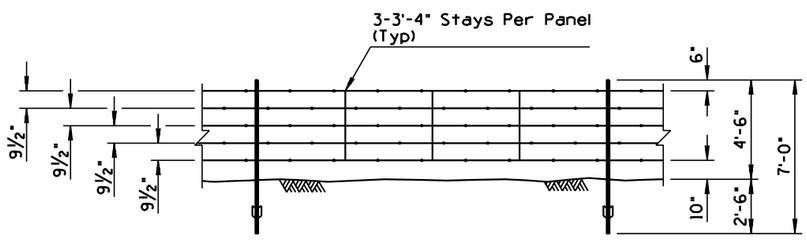

TYPE 2 BARBED WIRE (BW) (5 WIRE)

GENERAL NOTES

1. Intermediate Post Assemblies shall be located as shown and at intervals not to exceed 650', or midway between all braced posts.
2. For game fence the bottom wire shall be barbless.
3. The stays on game fence shall have their ends turned up, to prevent injuries to game.

DESIGN APPROVED Terry H. Otterness	STATE OF ARIZONA DEPARTMENT OF TRANSPORTATION DIVISION OF HIGHWAYS STANDARD DRAWINGS	REV. 7/94
APPROVED FOR DISTRIBUTION Ronald C. Williams	① FENCE, BARBED WIRE	DRAWING NO. C-12.10 Sheet 2 of 5

NO	DESCRIPTION OF REVISIONS	MADE BY	DATE
1	REISSUE STD	PNB	7/94
2			
3			
4			

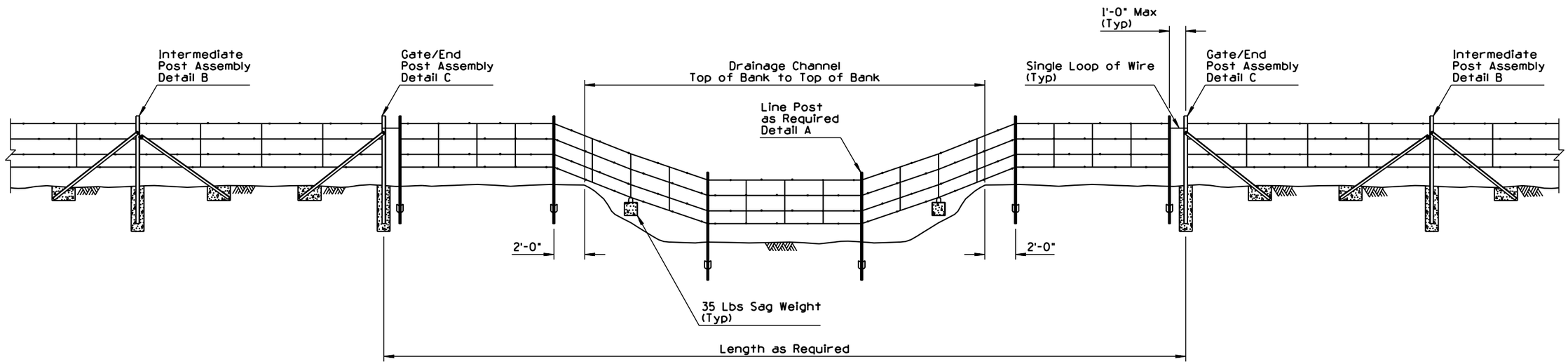

TYPE 1 DOUBLE GATE

FLOOD GATE

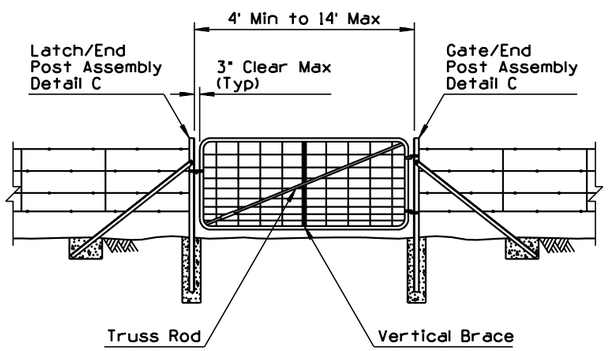

TYPE 1 SINGLE GATE

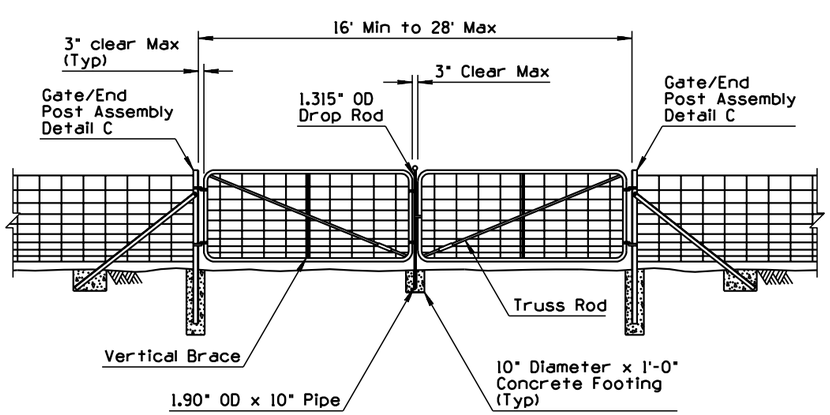

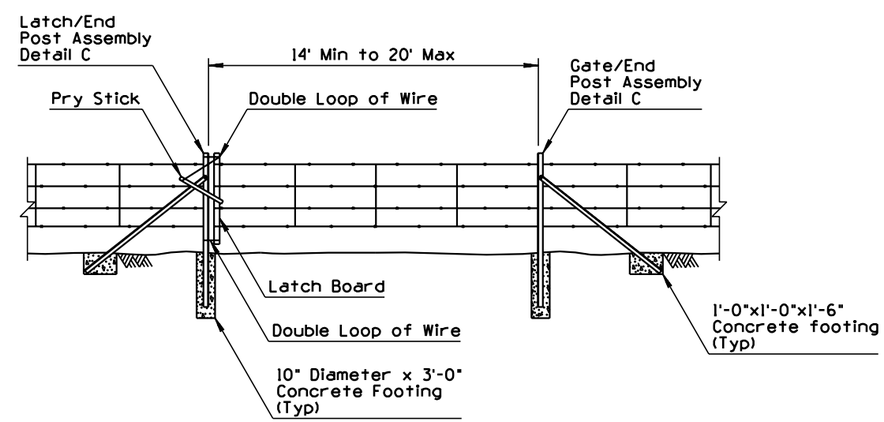

TYPE 2 GATE

DESIGN APPROVED	STATE OF ARIZONA DEPARTMENT OF TRANSPORTATION DIVISION OF HIGHWAYS STANDARD DRAWINGS	REV.
APPROVED FOR DISTRIBUTION	① FENCE, GATE, TYPE 1 AND 2 FLOOD GATE	DRAWING NO. C-12.10 Sheet 3 of 5

NO	DESCRIPTION OF REVISIONS	MADE BY	DATE
1	REISSUE STD	PNB	7/94
2			
3			
4			

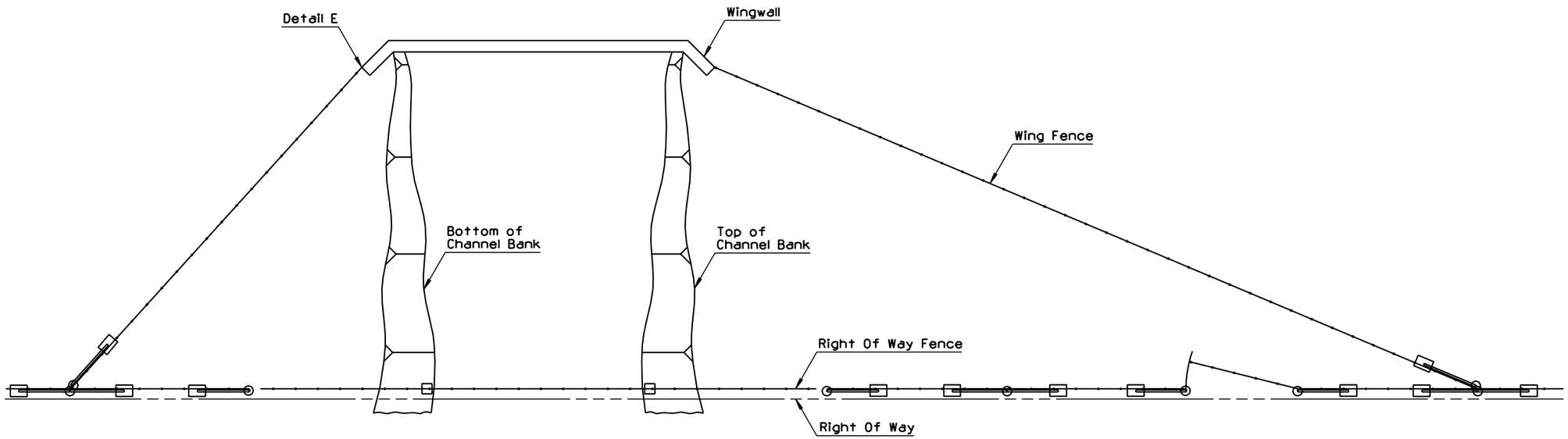

PLAN

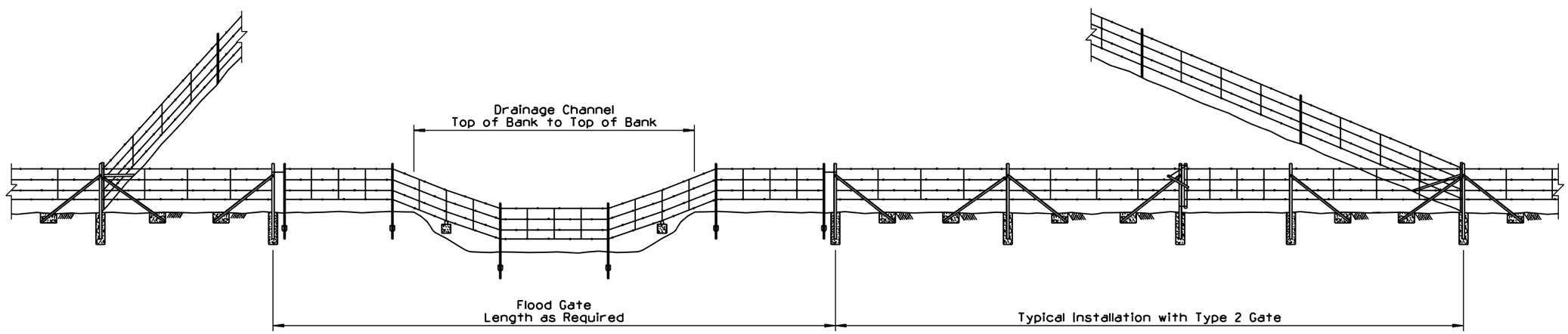

ELEVATION
TYPICAL FLOOD GATE INSTALLATION

DESIGN APPROVED Henry H. Ottenes	STATE OF ARIZONA DEPARTMENT OF TRANSPORTATION DIVISION OF HIGHWAYS STANDARD DRAWINGS	REV. 7/94
APPROVED FOR DISTRIBUTION Ronald C. Williams	① FENCE, FLOOD GATE INSTALLATION	DRAWING NO. C-12.10 Sheet 4 of 5

NO	DESCRIPTION OF REVISIONS	MADE BY	DATE
1	REISSUE STD	PNB	7/94
2			
3			
4			

GENERAL NOTES

1. Post assemblies shall consist of an upright angle $2\frac{1}{2}\times2\frac{1}{2}\times\frac{1}{4}$ at 4.10 lbs/ft. and brace angles $2\times2\times\frac{1}{4}$ at 3.19 lbs/ft.

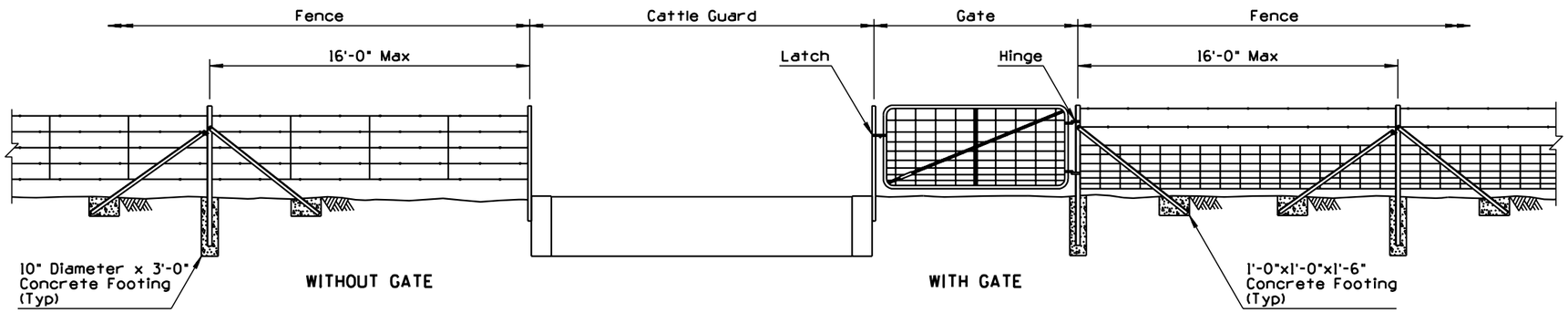

TYPICAL FENCE LOCATION AT CATTLE GUARD

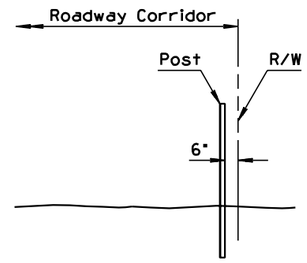

TYPICAL FENCE LOCATION

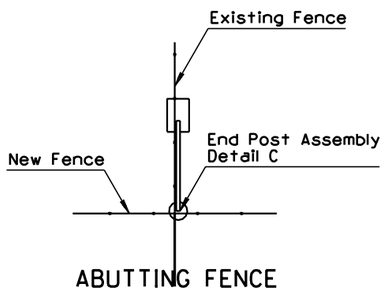

ABUTTING FENCE

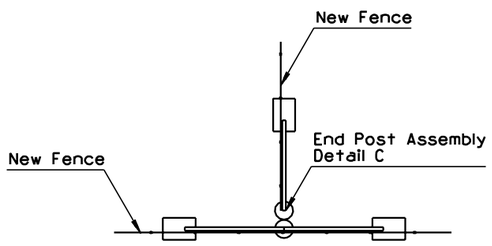

ABUTTING FENCE AT POST

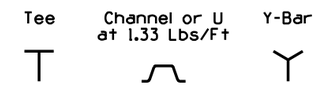

DETAIL A

TYPICAL CROSS SECTIONS OF LINE POST SHAPES

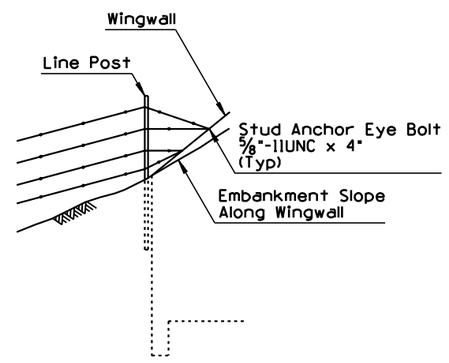

DETAIL E

FENCE CONNECTION TO WINGWALL

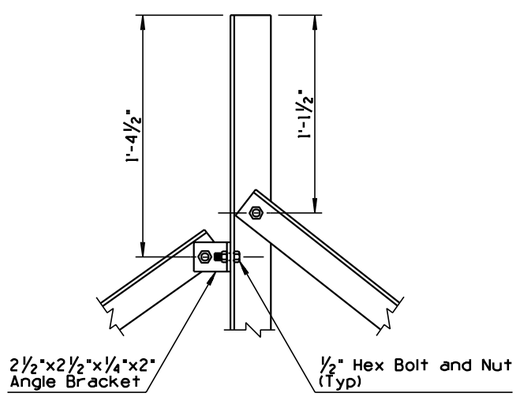

DETAIL B

INTERMEDIATE POST ASSEMBLY

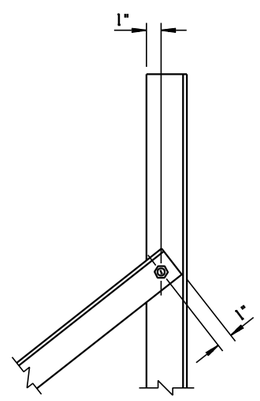

DETAIL C

END POST ASSEMBLY

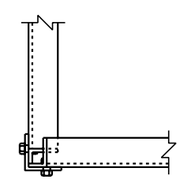

DETAIL D

CORNER POST ASSEMBLY

DESIGN APPROVED Terry H. Otterness	STATE OF ARIZONA DEPARTMENT OF TRANSPORTATION DIVISION OF HIGHWAYS STANDARD DRAWINGS	REV. 7/94
APPROVED FOR DISTRIBUTION Ronald C. Williams	1 FENCE, MISCELLANEOUS DETAILS	DRAWING NO. C-12.10 Sheet 5 of 5

NO	DESCRIPTION OF REVISIONS	MADE BY	DATE
1	MODIFIED DIMENSION	PNB	3/94
2			
3			
4			

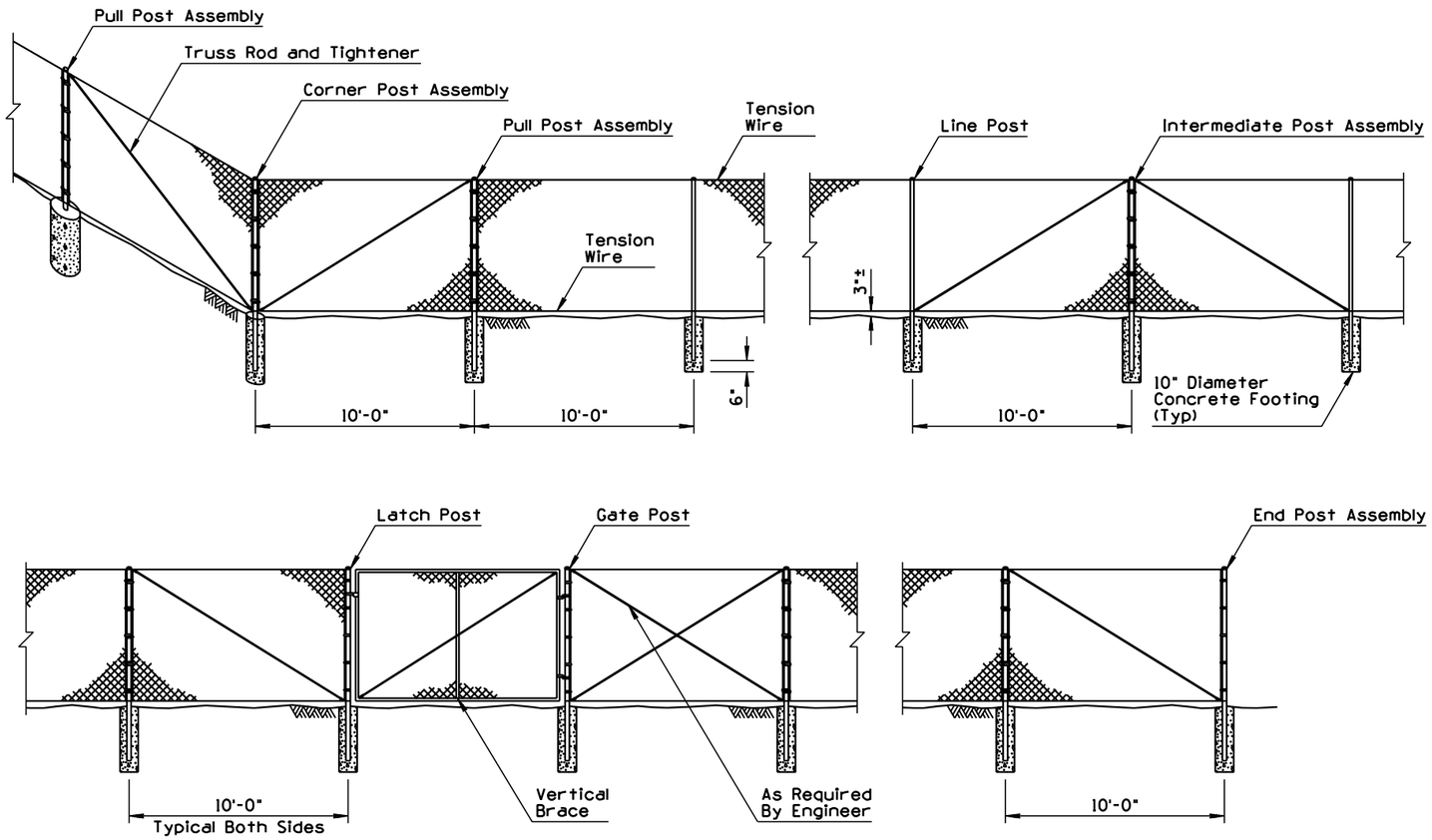

TYPICAL CHAIN LINK FENCE INSTALLATION - TYPE 1 SHOWN

GENERAL NOTES

1. Posts shall be round, H-section, or roll-formed and shall conform to the nominal dimensional requirements shown on the plans. Dimensional tolerances for all shapes shall be according to ASTM A-500. In addition, the material of which posts are fabricated shall have a nominal thickness, before galvanizing, of not less than 0.111" for line posts and 0.130" for terminal posts.
2. Chain link fabric shall be either zinc-coated or aluminum-coated steel wire fence fabric. Zinc-coated steel fabric shall conform to the requirements of ASTM A392, Class 1 coating. Aluminum-coated steel fabric shall conform to the requirements of ASTM A491, with a minimum weight of coating of 0.40 ounce per square foot of wire surface area. Fabric shall be 11 guage for all fence fabric 60 inches or less in height and shall be 9 guage for fabrics greater than 60 inches in height.
3. Tension wires shall be 7 guage (0.177 inch diameter) coil spring steel wire with a minimum tensile strength of 75,000 pounds per square inch and shall be zinc-coated or aluminum-coated.
4. Truss rods shall be 3/8 inch diameter adjustable rods. Truss tighteners shall have a strap thickness of not less than 1/4 inch.
5. Stretcher bars shall be 3/16 inch by 3/4 inch steel flat bars. Stretcher bar bands shall be 1/8 inch by one inch preformed steel bands.
6. (1) Bottom tension wire shall be 3 inches from top of crown on concrete footings.
7. Intermediate post assemblies shall be spaced at 500 foot intervals or midway between pull posts when the distance between such posts is less than 1,000 feet and more than 500 feet.
8. See sheet 3 of 3 for typical fence location.

TYPICAL POST DIMENSIONS

Fabric Height	Corner, End, Intermediate, Gate, Latch and Pull Posts				Line Posts			
		Round	Roll Formed			Round		Roll Formed
	Length	(OD)	∟	☐	Length	(OD)	H-Section	☐
36"	6'-0"	2.375"	3.50"x3.50"	2.25"x1.70"	5'-6"	1.900"	1.875"x1.625"	1.875"x1.625"
48"	7'-0"	2.375"	3.50"x3.50"	2.25"x1.70"	6'-6"	1.900"	1.875"x1.625"	1.875"x1.625"
60"	8'-0"	2.375"	3.50"x3.50"	2.25"x1.70"	7'-6"	1.900"	1.875"x1.625"	1.875"x1.625"
72"	9'-0"	2.375"	3.50"x3.50"	2.25"x1.70"	8'-6"	1.900"	1.875"x1.625"	1.875"x1.625"
Over 72"	Height +3'-0"	2.875"	3.50"x3.50"	2.50"x2.50"	Height +2'-6"	2.375"	2.250"x2.000"	1.875"x1.625"

DESIGN APPROVED Henry H. Ottenness	STATE OF ARIZONA DEPARTMENT OF TRANSPORTATION DIVISION OF HIGHWAYS STANDARD DRAWINGS	REV. 3/94
APPROVED FOR DISTRIBUTION Ronald C. Williams	FENCE, CHAIN LINK TYPE 1	DRAWING NO. C-12.20 Sheet 1 of 3

NO	DESCRIPTION OF REVISIONS	MADE BY	DATE
1	MODIFIED DIMENSION	PNB	3/94
2			
3			
4			

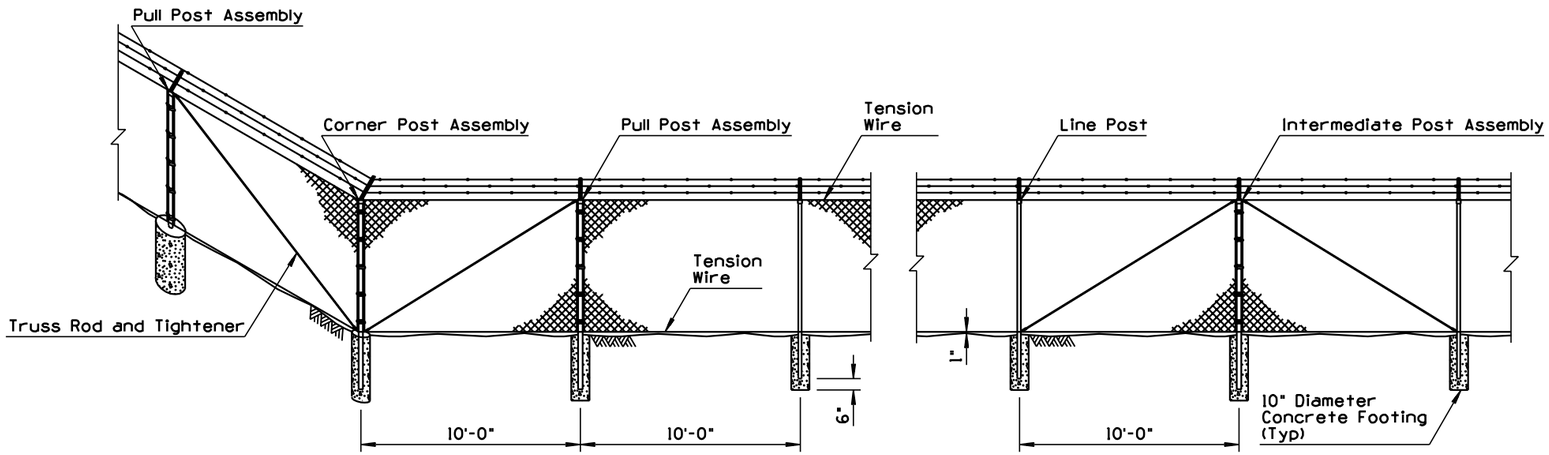

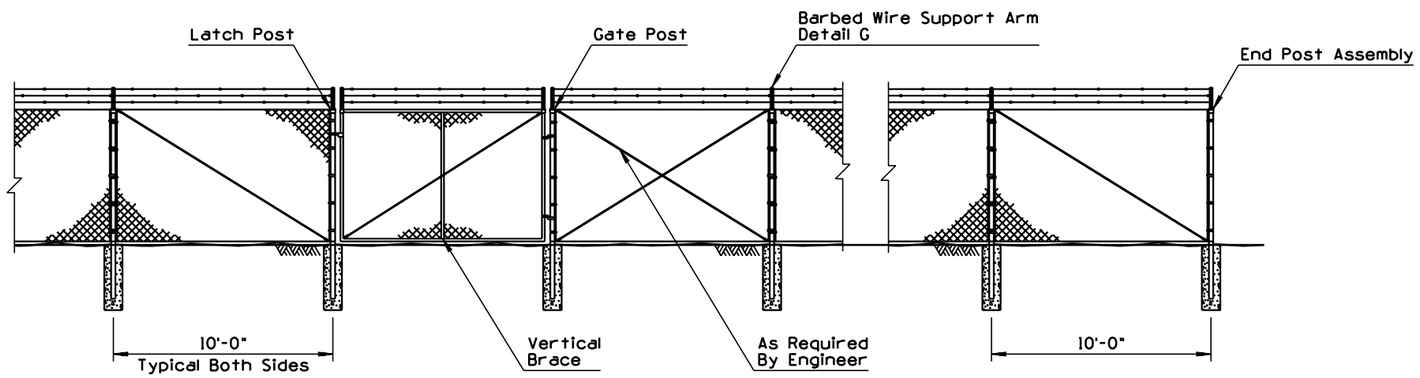

TYPICAL CHAIN LINK FENCE INSTALLATION - TYPE 2 SHOWN

GENERAL NOTES

1. Barbed wire for use with Type 2 chain link fence shall be 12 guage steel wire with 4 point 14 guage barbs spaced five inches apart and shall be either zinc-coated or aluminum-coated. Zinc-coated steel wire shall conform to the requirements of ASTM A121, Class 1 coating. Aluminum-coated steel wire shall conform to the requirements of ASTM 1585, Type 1, Class 1 coating.
2. Barbed wire support arm shall be of the type shown on the plans, shall be fabricated from commercial quality steel, and shall be zinc-coated in accordance with the requirements of AASHTO M111.
3. Bottom tension wire shall just clear top of crown on concrete footings.
4. For details and notes not shown - see chain link fence Type 1, sheet 1 of 3.
5. See sheet 3 of 3 for typical fence location.

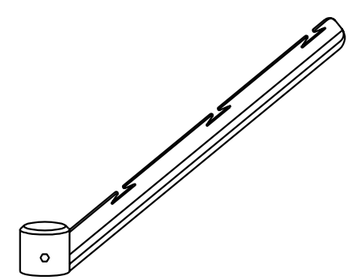

DETAIL G
BARBED WIRE SUPPORT ARM

TYPICAL POST DIMENSIONS

Fabric Height	Corner, End, Intermediate, Gate, Latch and Pull Posts				Line Posts			
		Round	Roll Formed			Round		Roll Formed
	Length	(OD)	⌊	☐	Length	(OD)	H-Section	☐
72"	① 8'-6"	2.375"	3.50"x3.50"	2.50"x2.50"	8'-0"	1.900"	1.875"x1.625"	1.875"x1.625"

DESIGN APPROVED
Terry H. Otterness
APPROVED FOR DISTRIBUTION
Ronald C. Williams

STATE OF ARIZONA
DEPARTMENT OF TRANSPORTATION
DIVISION OF HIGHWAYS
STANDARD DRAWINGS

REV. 3/94

FENCE, CHAIN LINK TYPE 2

DRAWING NO. C-12.20
Sheet 2 of 3

NO	DESCRIPTION OF REVISIONS	MADE BY	DATE
1	MODIFIED DRAWING	PNB	3/94
2			
3			
4			

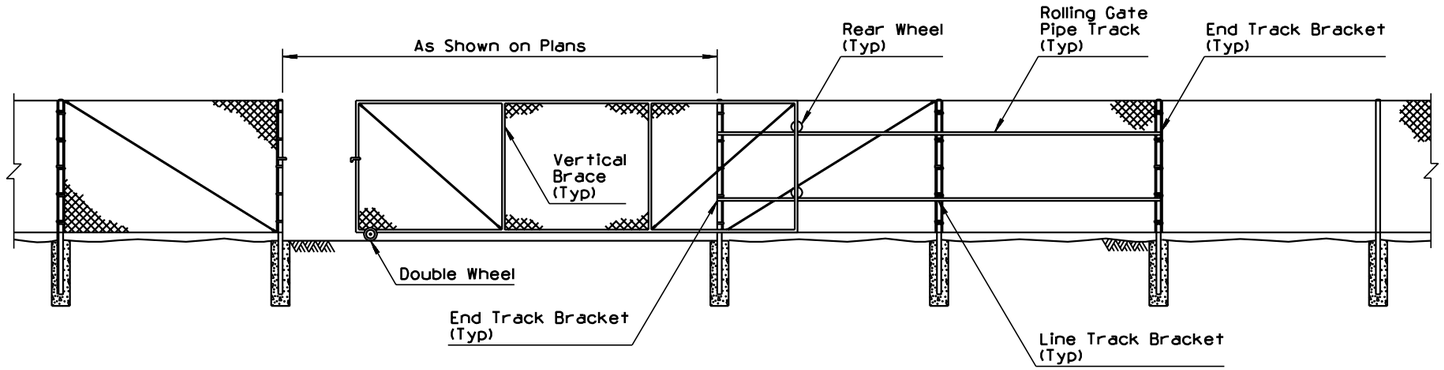

ROLLING GATE

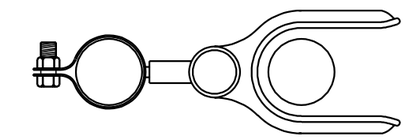

SECTION A-A
DOUBLE GATE LATCH ASSEMBLY

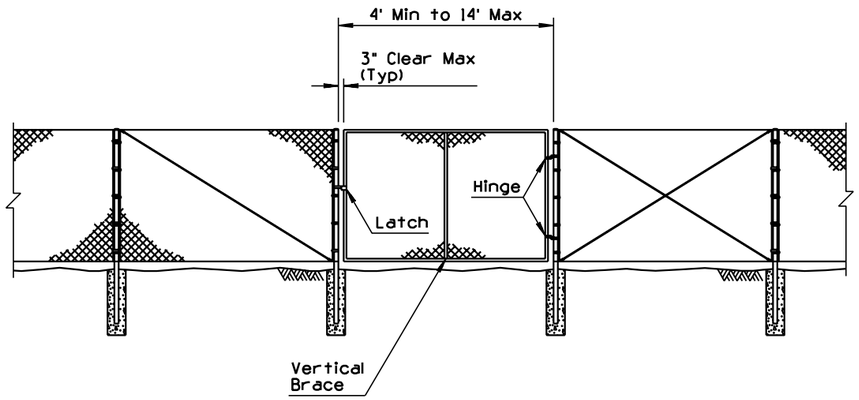

SINGLE GATE

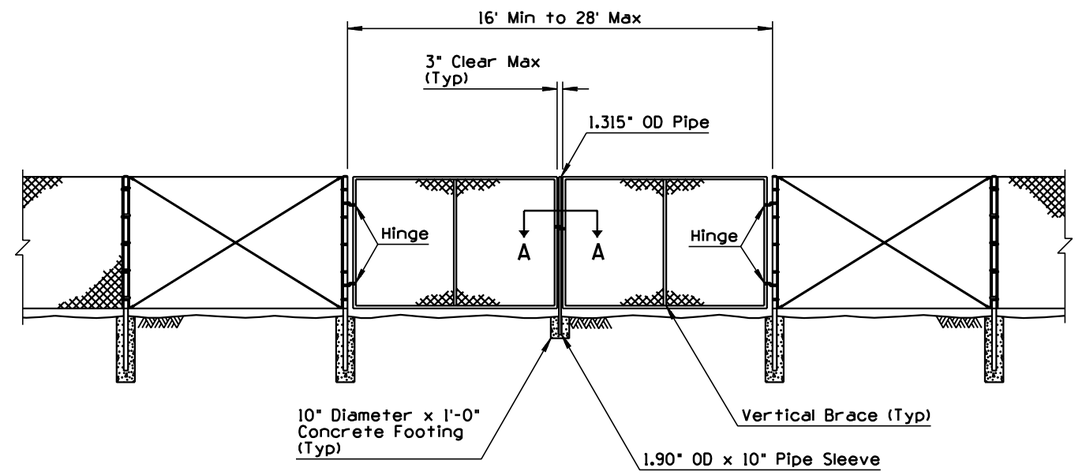

DOUBLE GATE

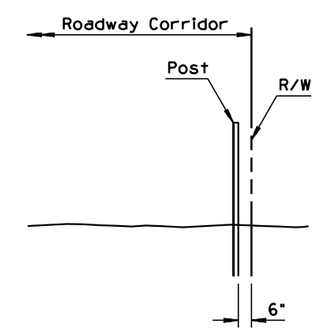

① TYPICAL FENCE LOCATION

TYPICAL GATE DIMENSIONS

SINGLE AND DOUBLE SWING GATES						ROLLING GATES			
Gate Leaf Width	Vertical Braces	Gate Post Size	Gate Leaf Width	Vertical Braces	Gate Post Size	Gate Leaf Width	No of Equally Spaced Vertical Braces	Tension Rods Per Braced Panel	Gate Post Size
6' H or Less		OD	Over 6' H		OD				OD
3' to 8'	0	2.8750"	3' to 8'	0	2.8750"	6' to 13'	1	0	2.8750"
8' to 16'	1	4.0000"	8' to 16'	1	4.0000"	13' to 16'	1	1	2.8750"
16' to 18'	2	4.0000"				16' to 21'	2	1	2.8750"
						21' to 27'	2	1	2.8750"
						28' and Larger	3	1	2.8750"

GATES FOR CHAIN LINK FENCE - TYPE 1 SHOWN
(Type 2, With Barbed Wire Typical)

DESIGN APPROVED	STATE OF ARIZONA DEPARTMENT OF TRANSPORTATION DIVISION OF HIGHWAYS STANDARD DRAWINGS	REV. 3/94
APPROVED FOR DISTRIBUTION	FENCE, CHAIN LINK GATES	DRAWING NO. C-12.20 Sheet 3 of 3

NO	DESCRIPTION OF REVISIONS	MADE BY	DATE
1	REVISED SPECIFICATION REFERENCE	PNB	10/95
2			
3			
4			

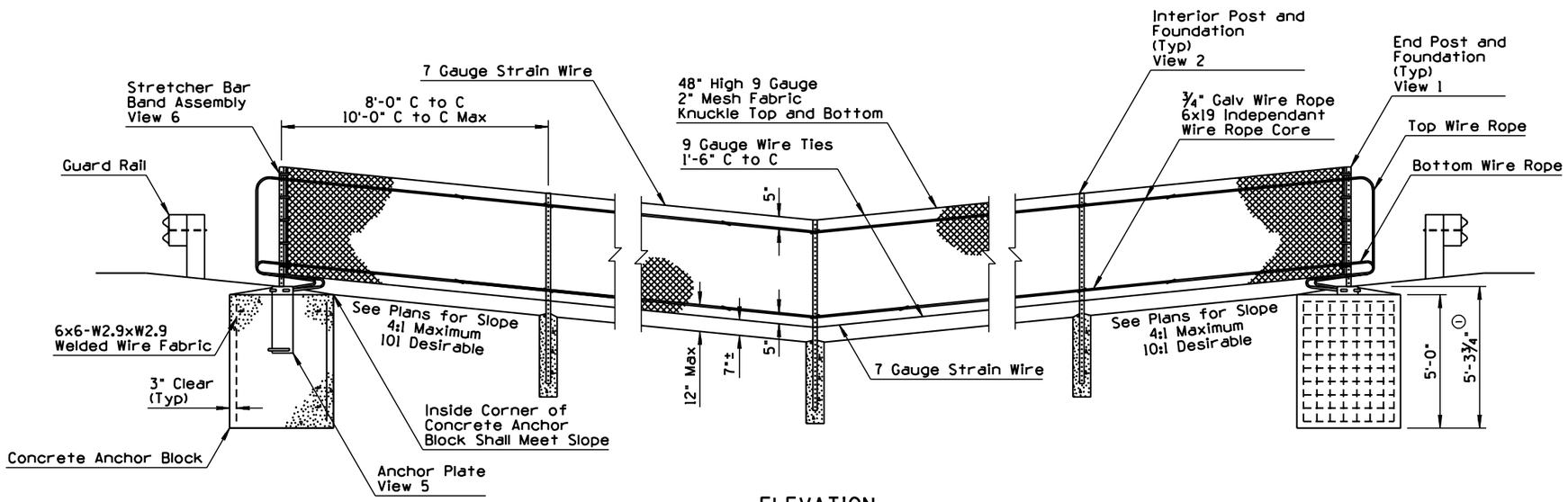

ELEVATION

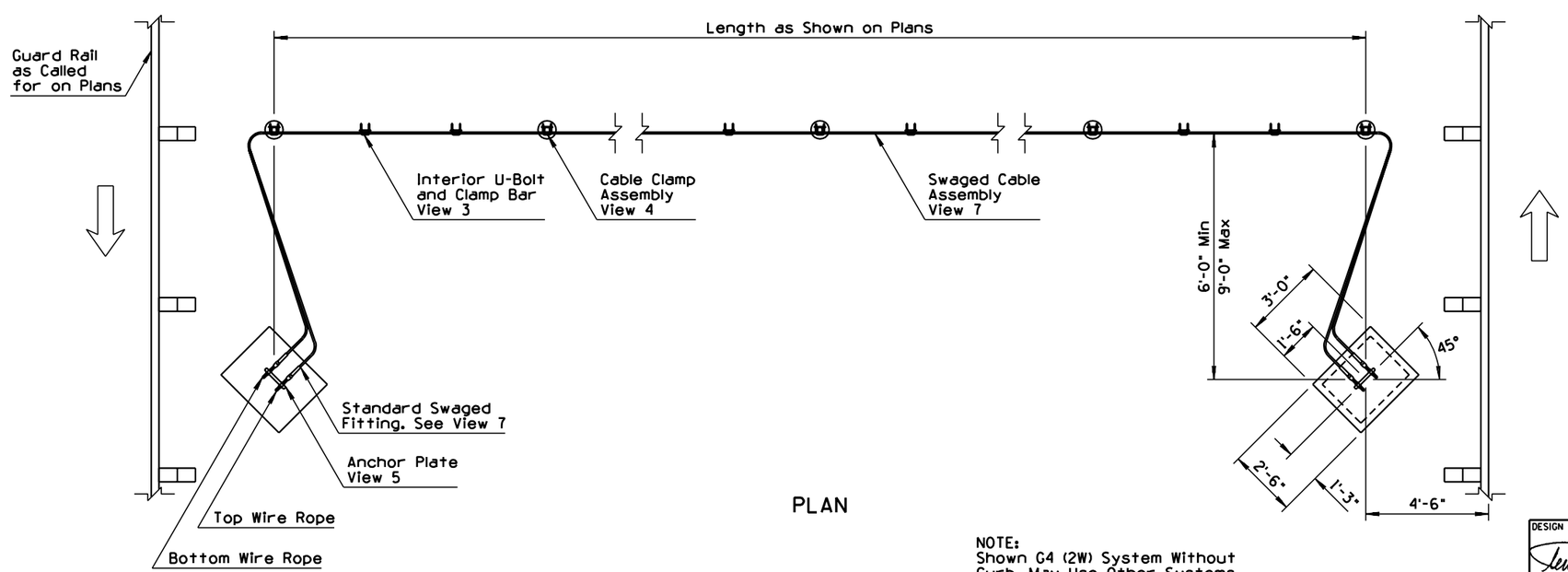

PLAN

NOTE:
Shown G4 (2W) System Without Curb. May Use Other Systems With or Without Curb.

GENERAL NOTES

1. All concrete shall be Class S, 4000 psi.
2. All bolts, nuts, washers and fittings shall meet the dimensional requirements of the American National Standards Insittute, unless otherwise designated and shall be galvanized in accordance with ASTM A153.
3. Galvanized swaged fitting and U-Bolt shall conform to ASTM A449.
4. The ¾" galvanized wire rope shall conform to AASHTO M30 Class B, Type 2.
5. The wire fabric, ties, bands, stretcher bars, and other fittings and hardware shall conform to AASHTO M181.
6. The wire fabric fence shall follow contour of the graded median.
7. The excavation for the concrete anchor blocks shall be to neat lines. Maximum excess shall be 3".
8. (1) Perforated posts shall be square tube formed from 0.105" USS guage ASTM A 366/A 366M cold rolled carbon steel. The square tubes shall be welded directly in the corner by high frequency resistance welding or equal. The posts to be externally scarfed to agree with standard corner radii of 5/32" ± 1/16".
9. (1) Perforated posts shall be galvanized to the requirements of ASTM A 653/A 653M. Coating Designator shall be Z275.
10. The cables shall have enough tension to prevent sagging. The location of the concrete anchor blocks may also be varied to provide enough tension to help prevent sagging.
11. Two interior U-bolt and clamp bars shall be spaced at 1/3 of the distance between posts.
12. See Standard C-12.20 for 48" fabric details.
13. An alternate to rectangular concrete anchor block shall be a 36" diameter round footing with an additional depth of 4".
14. The median approach grade within 100'± of the Chain Link Cable Barrier should not exceed a grade break of 10 percent.

DESIGN APPROVED Terry H. Otterness	STATE OF ARIZONA DEPARTMENT OF TRANSPORTATION DIVISION OF HIGHWAYS STANDARD DRAWINGS	REV. 10/95
APPROVED FOR DISTRIBUTION Ronald C Williams	CHAIN LINK CABLE BARRIER	DRAWING NO. C-12.30 Sheet 1 of 3

NO	DESCRIPTION OF REVISIONS	MADE BY	DATE
1	REISSUE STD	PNB	7/94
2			
3			
4			

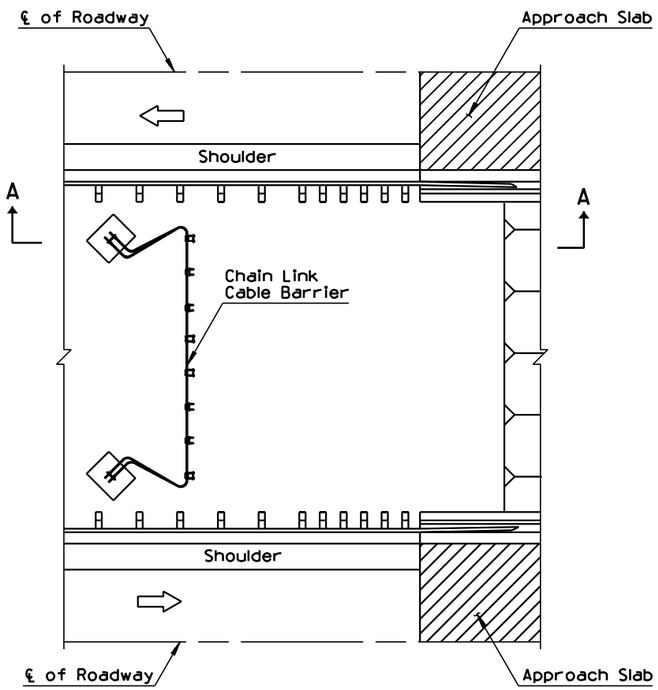

PLAN

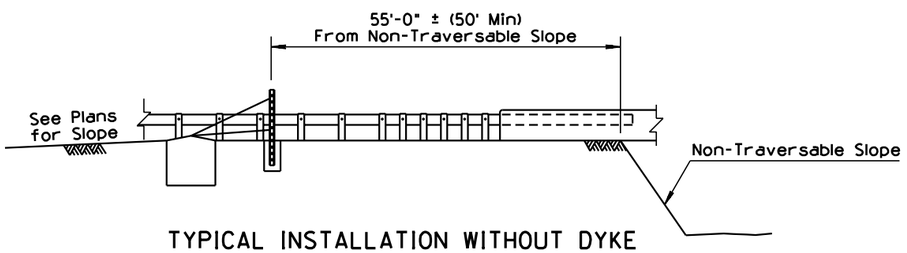

TYPICAL INSTALLATION WITHOUT DYKE

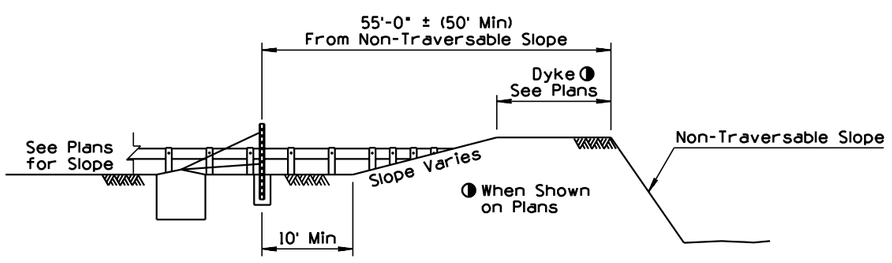

SECTION A-A
TYPICAL INSTALLATION WITH DYKE

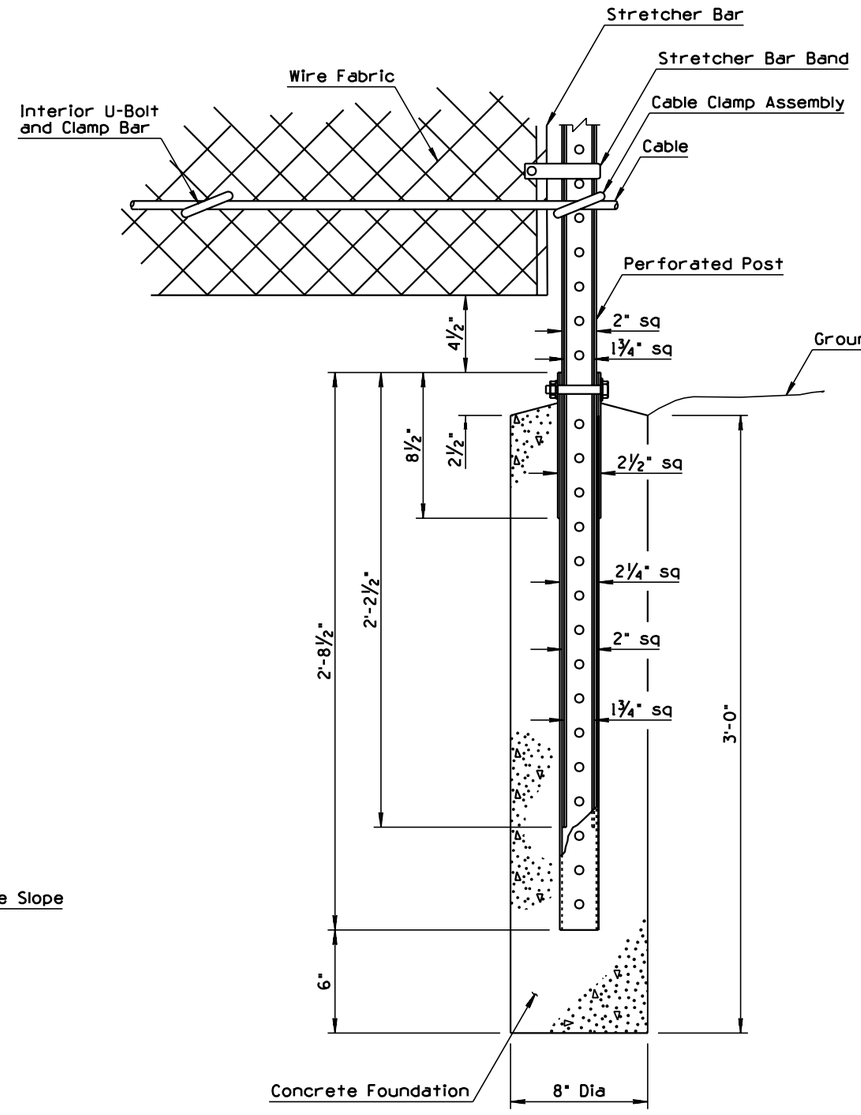

VIEW 1
END POST AND FOUNDATION

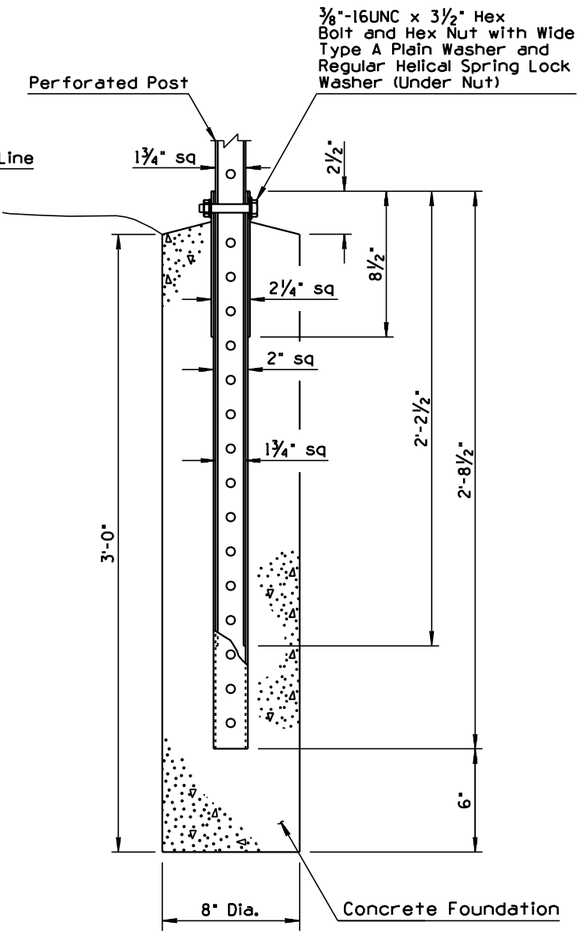

VIEW 2
INTERIOR POST AND FOUNDATION

DESIGN APPROVED Terry H. Otterness	STATE OF ARIZONA DEPARTMENT OF TRANSPORTATION DIVISION OF HIGHWAYS STANDARD DRAWINGS	REV. 7/94
APPROVED FOR DISTRIBUTION Ronald C. Williams	① CHAIN LINK CABLE BARRIER	DRAWING NO. C-12.30 Sheet 2 of 3

NO	DESCRIPTION OF REVISIONS	MADE BY	DATE
1	REISSUE STD	PNB	7/94
2			
3			
4			

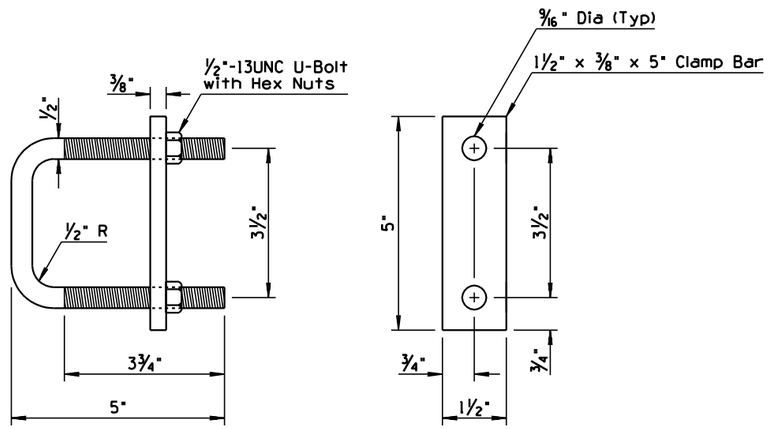

VIEW 3
U-BOLT AND CLAMP BAR

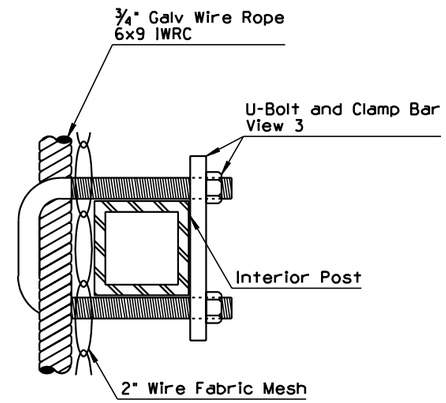

VIEW 4
CABLE CLAMP ASSEMBLY

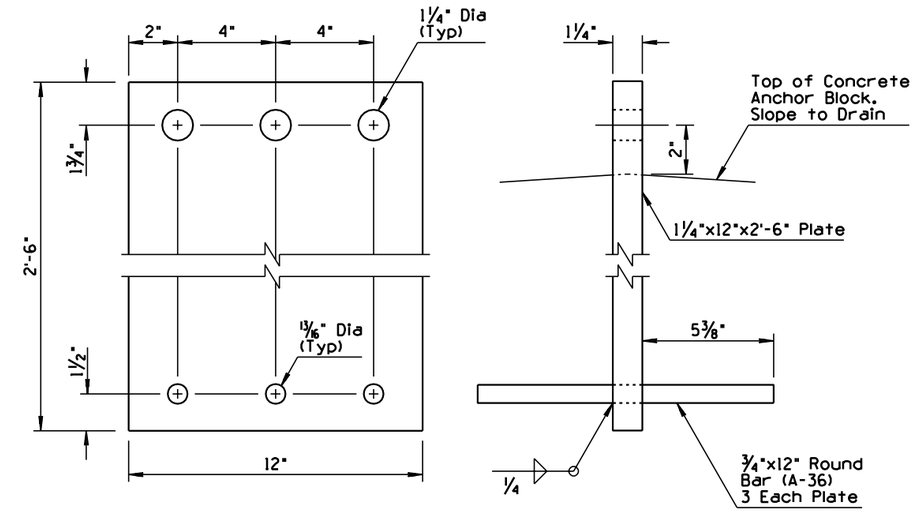

VIEW 5
ANCHOR PLATE

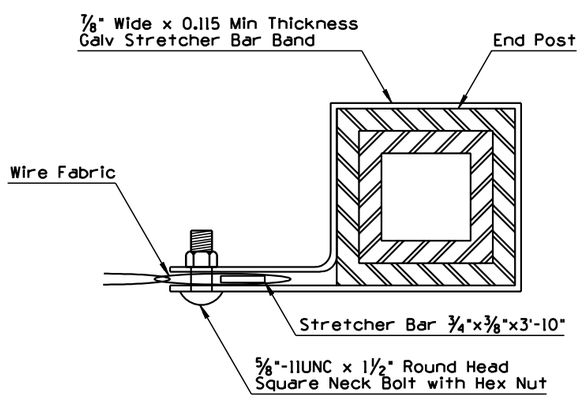

VIEW 6
STRETCHER BAR BAND ASSEMBLY

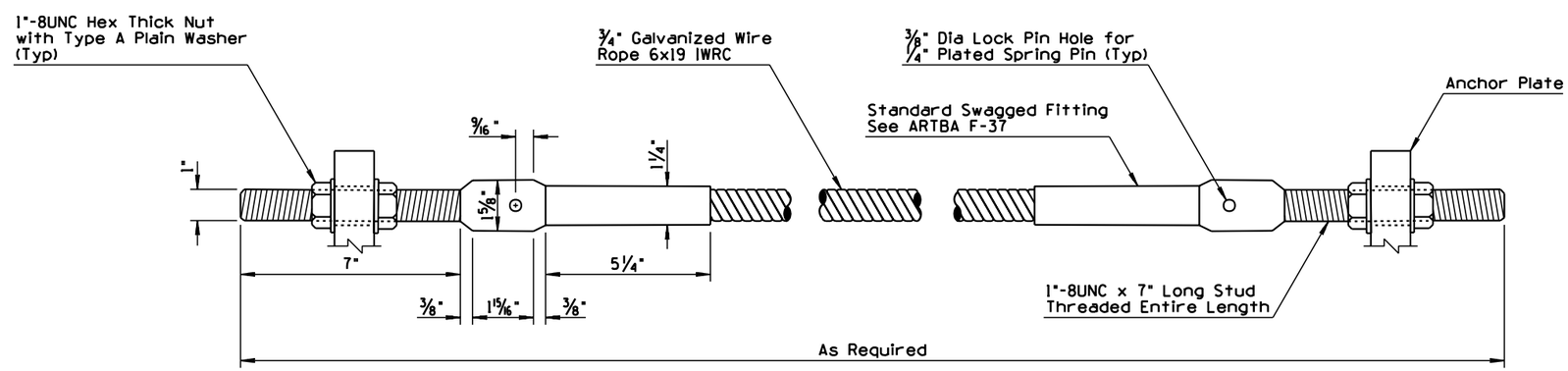

VIEW 7
SWAGED CABLE ASSEMBLY

DESIGN APPROVED Terry H. Otterness	STATE OF ARIZONA DEPARTMENT OF TRANSPORTATION DIVISION OF HIGHWAYS STANDARD DRAWINGS	REV. 7/94
APPROVED FOR DISTRIBUTION Ronald C. Williams	① CHAIN LINK CABLE BARRIER	DRAWING NO. C-12.30 Sheet 3 of 3

NO	DESCRIPTION OF REVISIONS	MADE BY	DATE
1	REVISED NOTE	PNB	10/95
2			
3			
4			

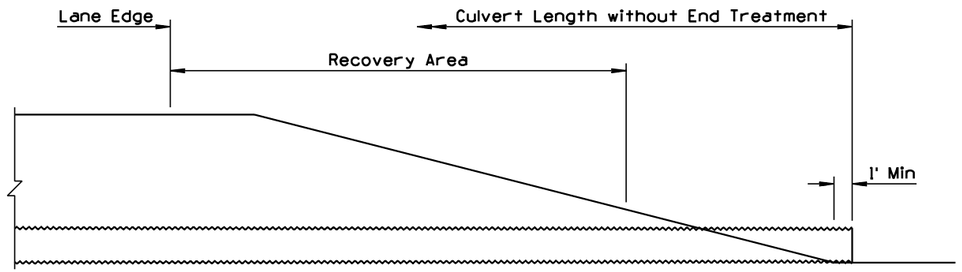

CULVERT INSTALLATION WITHOUT END TREATMENT

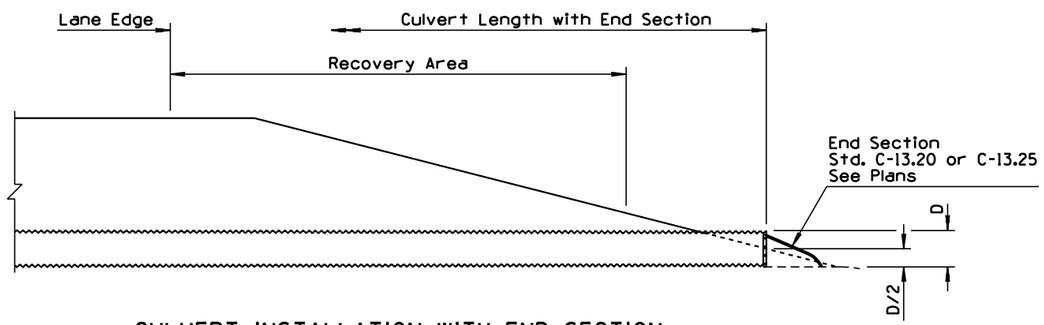

CULVERT INSTALLATION WITH END SECTION

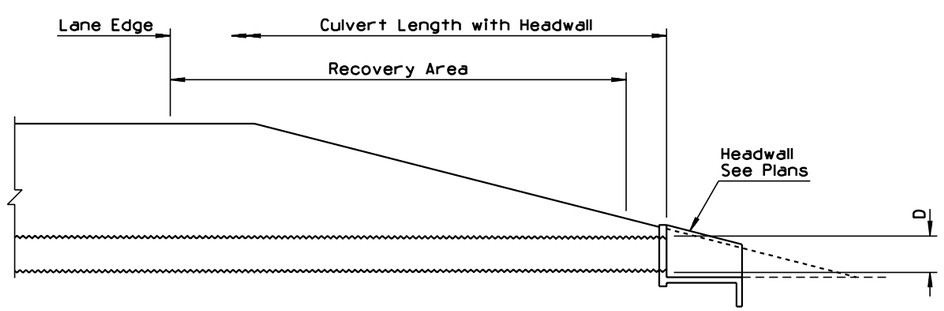

CULVERT INSTALLATION WITH HEADWALL

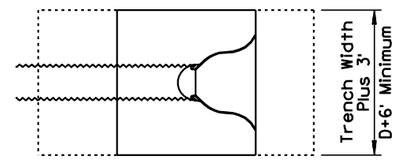

PLAN

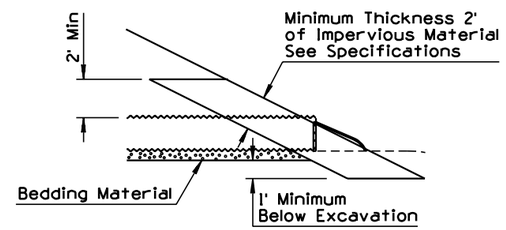

ELEVATION WITH END SECTION

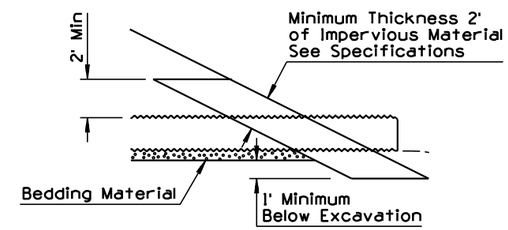

ELEVATION

PLATING SLOPES AT PIPE LOCATIONS

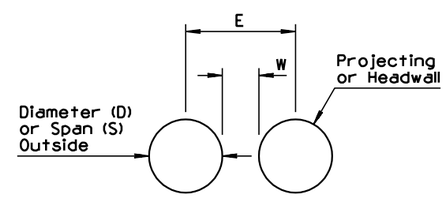

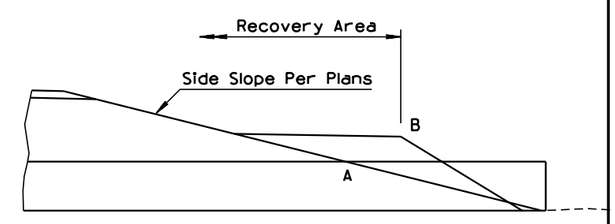

PIPE BERM REQUIREMENT DETAIL

MINIMUM SPACING FOR MULTIPLE INSTALLATIONS		
Diameter or Span	Installation Type	
	Projecting (W)	Headwall (E)
18"	12"	2'-6"
24"	12"	3'-0"
30"	15"	3'-9"
36"	18"	4'-6"
42"	21"	5'-3"
48" to 66"	(D or S)/2	D + 36"
72" and Over	36"	D + 36"

MULTIPLE INSTALLATIONS WITHOUT END SECTIONS

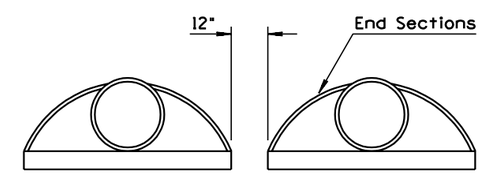

MULTIPLE INSTALLATIONS WITH END SECTIONS

GENERAL NOTES

1. See plans for any required inlet and/or outlet protection.
2. See remaining C-13 Series standards, Std B-11.11 and Std B-11.14.
3. Dimensions W and E apply to both non-trench and trench conditions.
4. (1) Minimum cover over pipe culverts shall be 12", measured from the top of pipe.
5. See Pipe Berm Requirement Detail for pipe berm requirements and Std C-03.10 for installation. If Point A is within the recovery area, then a pipe berm is required and Point B is set at the edge of the recovery area.
6. Plating of slopes at pipe locations similar for pipes without end sections and for multiple pipe installations.

DESIGN APPROVED: Terry H. Otterness	STATE OF ARIZONA DEPARTMENT OF TRANSPORTATION DIVISION OF HIGHWAYS STANDARD DRAWINGS	REV. 10/95
APPROVED FOR DISTRIBUTION: Ronald C Williams	PIPE CULVERT INSTALLATION	DRAWING NO. C-13.10 Sheet 1 of 2

NO	DESCRIPTION OF REVISIONS	MADE BY	DATE
1	MODIFIED DETAIL	PNB	7/94
2	ADDED DETAIL	PNB	7/94
3	ADDED NOTE	PNB	7/94
4	MODIFIED NOTE	BAF	7/97

GENERAL NOTES

4 1. Minimum cover over pipe culverts shall be 12", measured from the top of pipe.

2. See remaining C-13 Series standards for other pipe details.

3 3. After welding, the damaged coating shall be cleaned by a wire brush and painted with at least one full coat of Paint No. 4, or given two coats of an approved hot asphalt paint, as directed by the Engineer.

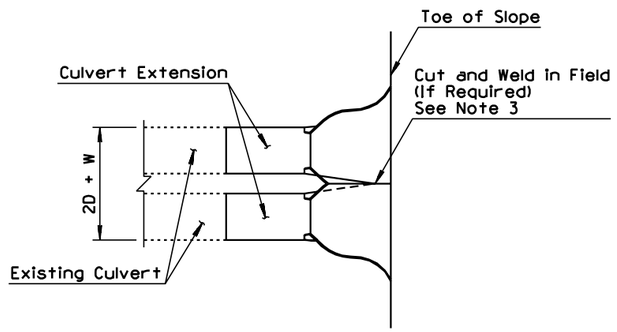

2 SPECIAL MULTIPLE PIPE END SECTION DETAIL
FOR PIPE CULVERT EXTENSIONS ONLY

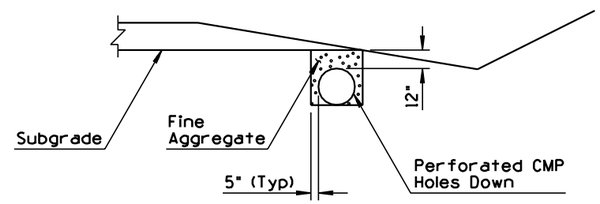

1 PERFORATED CMP INSTALLATION

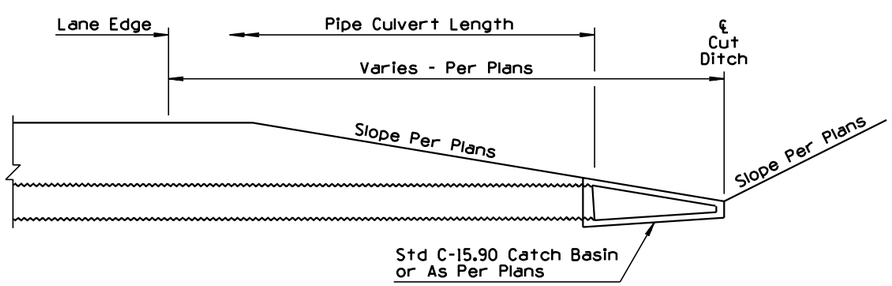

1 PIPE AND CATCH BASIN INSTALLATION
AT SAG CONDITION OF CUT DITCH

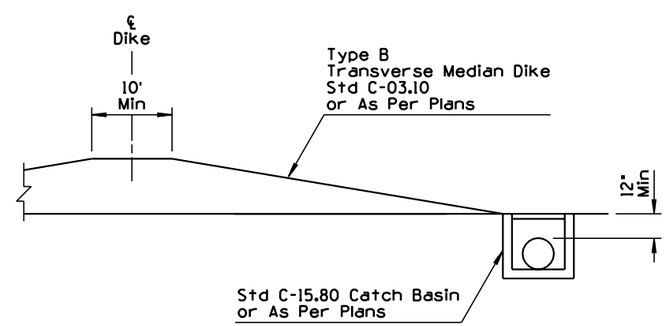

1 PIPE AND CATCH BASIN INSTALLATION
AT BASE OF TRANSVERSE DIKE

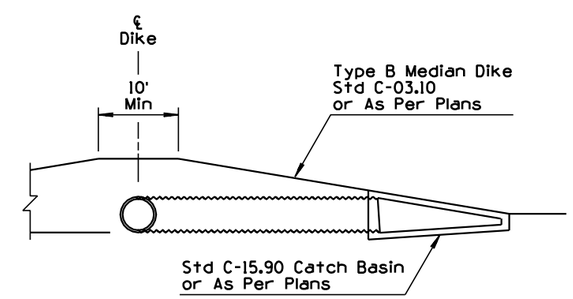

1 PIPE AND CATCH BASIN INSTALLATION
AT FACE OF TRANSVERSE DIKE

DESIGN APPROVED Henry H. Otterness	STATE OF ARIZONA DEPARTMENT OF TRANSPORTATION DIVISION OF HIGHWAYS STANDARD DRAWINGS	REV. 8/98
APPROVED FOR DISTRIBUTION Ronald C. Williams	PIPE CULVERT INSTALLATION	DRAWING NO. C-13.10 Sheet 2 of 2

NO	DESCRIPTION OF REVISIONS	MADE BY	DATE
1	ADDED NOTE	PNB	7/94
2	REARRANGED STD	PNB	7/94
3	MODIFIED NOTE	BAF	8/98
4			

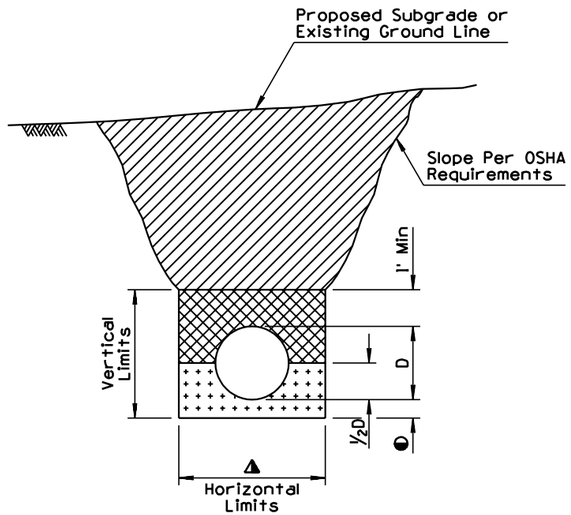

TRENCH CONDITION
IN NATURAL GROUND OR IN EMBANKMENT
WITHOUT BRACING

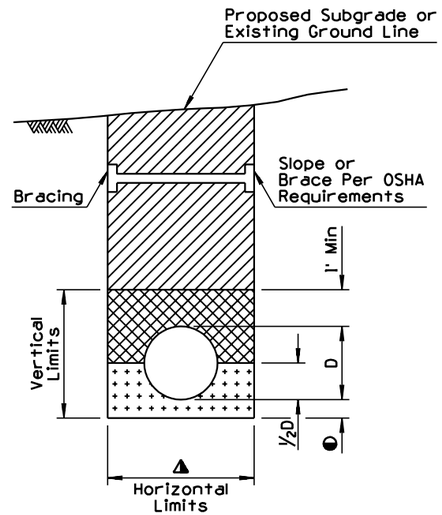

TRENCH CONDITION
IN NATURAL GROUND OR IN EMBANKMENT
WITH BRACING SHOWN

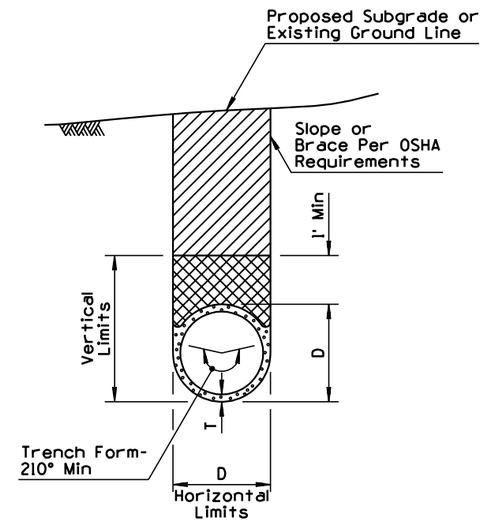

TRENCH CONDITION
NRCIPCP IN NATURAL GROUND
OR IN EMBANKMENT

GENERAL NOTES

1. Pipes shall be installed either in a trench condition or in a non-trench condition in natural ground or in embankment.
2. In a trench condition, the vertical and horizontal limits shall be maintained. If horizontal limits are exceeded or the vertical limits are not maintained, a non-trench condition exists.
3. Bracing and sloping shall conform to OSHA requirements.
4. Pipe backfill may be bedding material.
5. (1) In a non-trench condition, the embankment for pipe stability shall be constructed in lifts to the limits shown in the detail simultaneously with the bedding material and pipe backfill. If the contractor chooses to construct it as a trench condition, the embankment shall be constructed before excavating the trench.

D - Outside diameter of full circle pipe or outside dimension (span or rise) of arch, arch pipe, elliptical pipe.

T - Minimum wall thickness for NRCIPCP. See Plans.

(3) ▲ - D+6 inches each side minimum for diameters less than 4 feet.
D+2 feet maximum for diameters up to 4 feet.

D+1 foot each side minimum for diameters equal to or over 4 feet.
D+3 feet maximum for diameters 4 feet or over.

◐ - 6 inches except when on unyielding or unstable material. See standard specifications.

TRENCH BACKFILL

PIPE BACKFILL

BEDDING

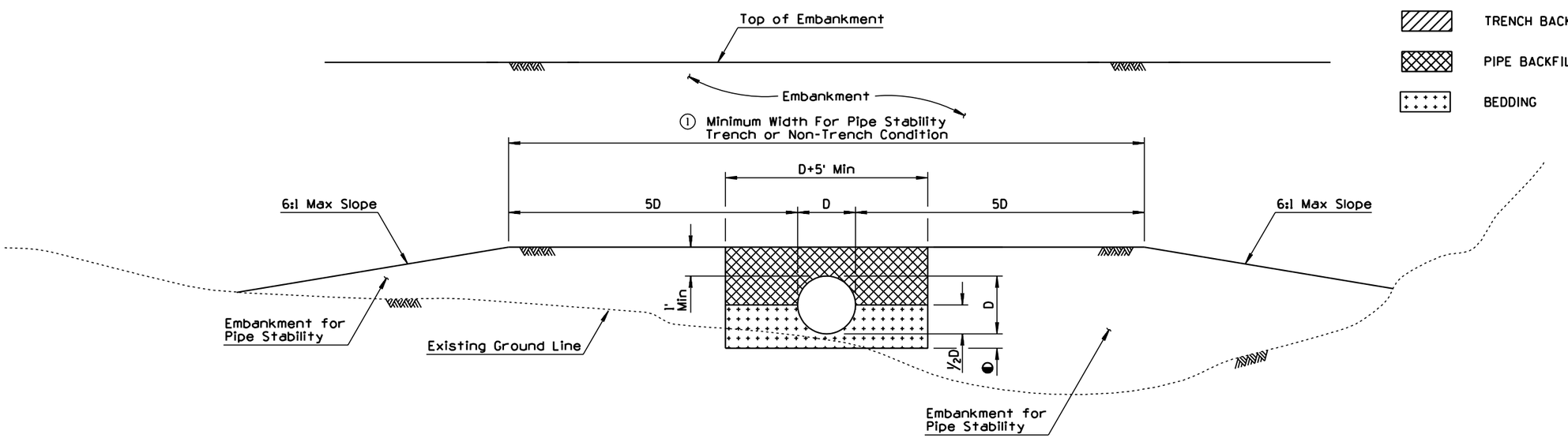

NON-TRENCH CONDITION

DESIGN APPROVED
Henry H. Otterness

APPROVED FOR DISTRIBUTION
Ronald C. Williams

STATE OF ARIZONA
DEPARTMENT OF TRANSPORTATION
DIVISION OF HIGHWAYS
STANDARD DRAWINGS

REV. 8/98

(2) TYPICAL PIPE INSTALLATION

DRAWING NO. C-13.15

NO	DESCRIPTION OF REVISIONS	MADE BY	DATE
1	REISSUE STD	PNB	7/94
2			
3			
4			

GENERAL NOTES

1. Design of end section shall conform to standards.
2. End section joint conformation shall match the pipe joints.
3. Embankment slope shall be warped to match slope of end section.

Pipe Dia	Approx Weight	Dimensions - Inches						Approx Slope
		T	A	B	C	E	F	
24"	1520#	3	9½	43½	30	73½	48	3
27"	1930#	3¼	10½	49½	24	73½	54	3
30"	2190#	3½	12	54	19¾	73¾	60	3
36"	4100#	4	15	63	34¾	97¾	72	3
42"	5380#	4½	21	63	35	98	78	3

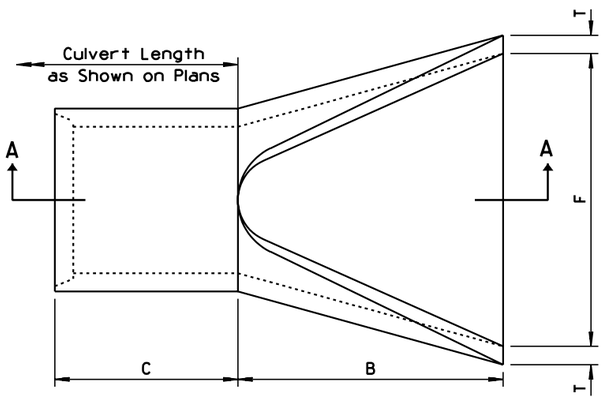

PLAN

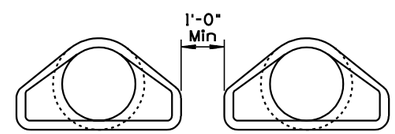

SPACING FOR MULTIPLE INSTALLATION

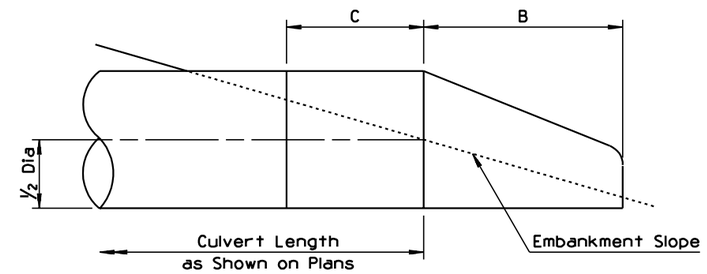

RIGHT ANGLE CULVERT

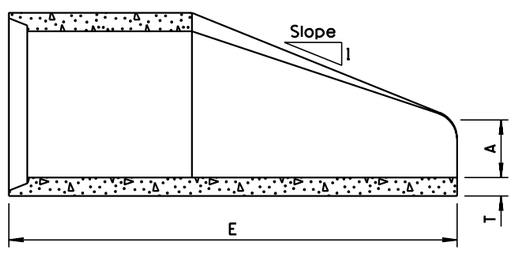

SECTION A-A

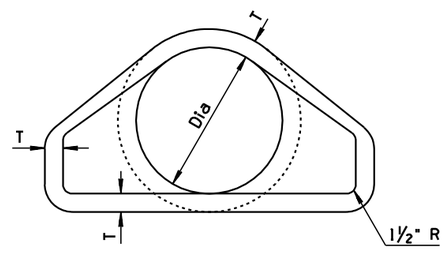

FRONT ELEVATION

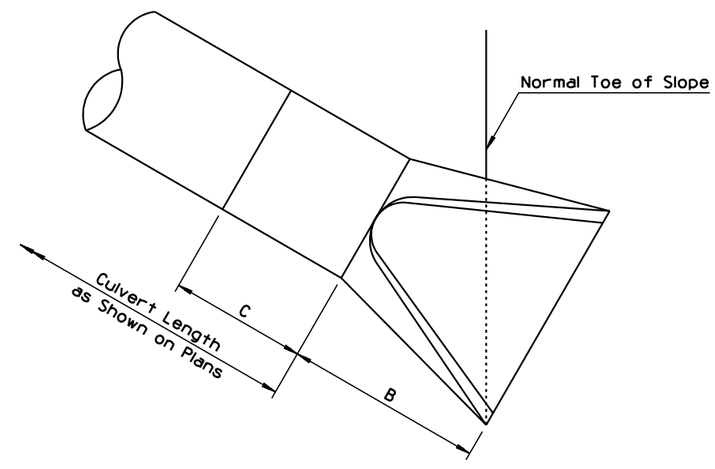

SKEWED CULVERT

DESIGN APPROVED Terry H. Otterness	STATE OF ARIZONA DEPARTMENT OF TRANSPORTATION DIVISION OF HIGHWAYS STANDARD DRAWINGS	REV. 7/94
APPROVED FOR DISTRIBUTION Ronald C. Williams	① PIPE, REINFORCED CONCRETE END SECTION	DRAWING NO. C-13.20

NO	DESCRIPTION OF REVISIONS	MADE BY	DATE
1	CORRECTED SPELLING OF "EMBANKMENT"	PNB	10/95
2	DELETED DETAIL	BAF	7/97
3	DELETED TITLE AND SUBTITLE	BAF	7/97
4	DELETED RIVETS	BAF	7/97
5	MODIFIED DATA TABLE	BAF	6/98
6			
7			
8			

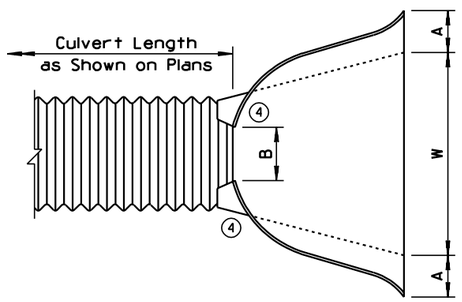

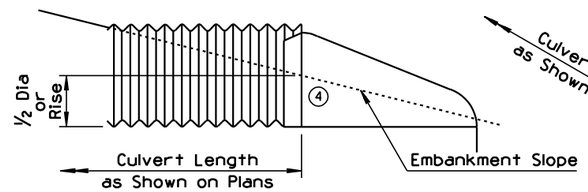

RIGHT ANGLE CULVERT

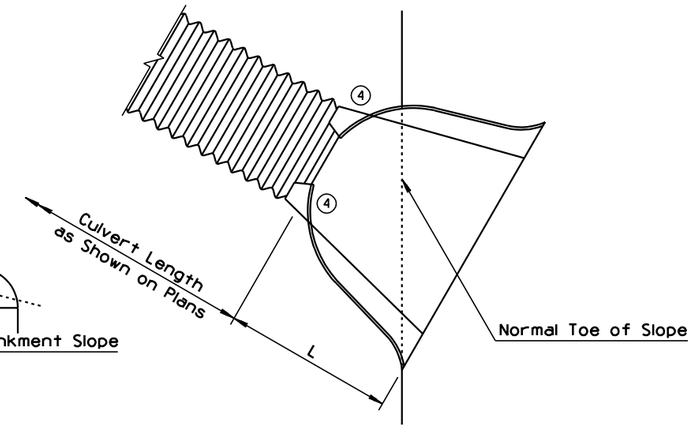

SKEWED CULVERT

GENERAL NOTES

1. The end section may be jointed to the pipe or connector section by bolts, rivets, dimpled bands, slip-seam bands or threaded rod type fasteners. For allowable connector types, see table.
2. The type 1 connector is by means of bolts or rivets. Maximum circumferential fastener spacing shall be 12" and with a minimum of 8 fasteners per joint. The type 1 joint may be used with either annular or helical corrugations.
3. Type 2 and 3 connectors shall be used only with annular or helical pipe with a requisite number of annular corrugations.
4. Type 4 and 5 connectors shall be only used with helical pipe.
5. All steel end section components shall be galvanized.
6. (1) Toe of embankment shall be warped to match toe of skewed end section.
7. A berm shall be added to abnormal projections per Std C-13.10.
8. The foregoing applies to all cross section configurations.

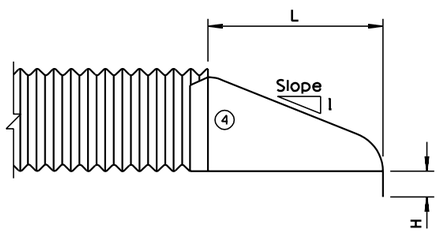

(3)

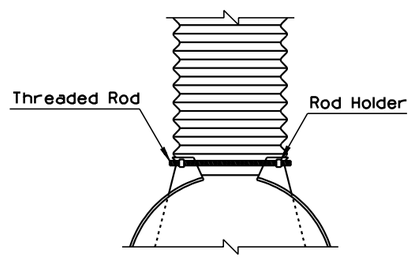

TYPE 2
THREADED ROD CONNECTIONS

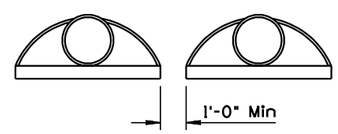

SPACING FOR MULTIPLE INSTALLATION

	Dimensions - Inches								
Pipe Dia	Ga	A ±1	B Max	H ±1	L ±1½	W ±2	Approx Slope	Connection Type	
18"	16	8	8	6	31	36	2½	2, 3, 4	(5)
24"	16	10	13	6	41	48	2½	2, 3, 4	(5)
30"	14	12¼	12½	8	51	57	2½	2, 4	(5)
36"	14	14½	12	9	60	72	2½	2, 4	(5)
42"	12	17	11	10½	69	84	2½	3	(5)

		Dimensions - Inches								
Pipe Arch										
Span	Rise	Ga	A ±1	B Max	H ±1	L ±1½	W ±2	Approx Slope	Connection Type	
21"	15"	16	7½	11	6	24	36	2½	2, 3, 4	(5)
28"	20"	16	8	16	6	32	48	2½	2, 3, 4	(5)
35"	24"	14	10	16	6	39	60	2½	2, 4	(5)
42"	29"	14	12	12	7½	46	75	2½	2, 4	(5)
49"	33"	12	13½	20	9	53	84	2½	3	(5)

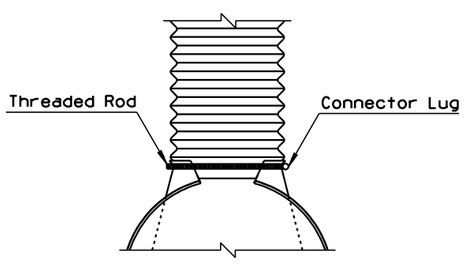

TYPE 3
THREADED ROD CONNECTIONS

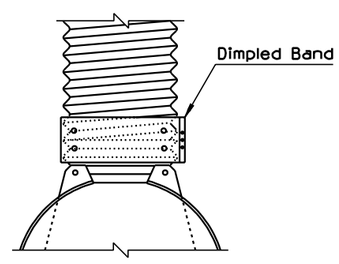

TYPE 4
DIMPLED BAND CONNECTIONS

(2)

DESIGN APPROVED
Terry H. Otterness
APPROVED FOR DISTRIBUTION
Ronald C. Williams

STATE OF ARIZONA
DEPARTMENT OF TRANSPORTATION
DIVISION OF HIGHWAYS
STANDARD DRAWINGS

REV. 8/98

PIPE, CORRUGATED METAL
END SECTION

DRAWING NO. C-13.25

NO	DESCRIPTION OF REVISIONS	MADE BY	DATE
1	REVISED GENERAL NOTE	PNB	10/95
2	REVISED GENERAL NOTE	BAF	7/97
3			
4			

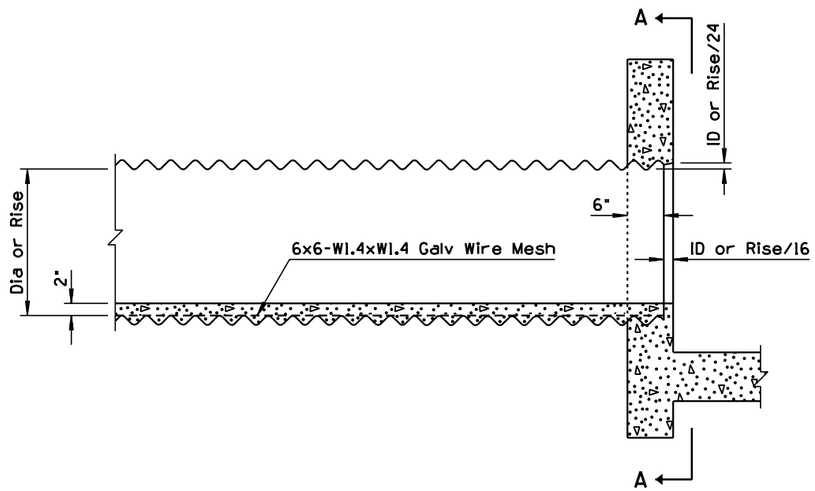

HEADWALL INSTALLATION

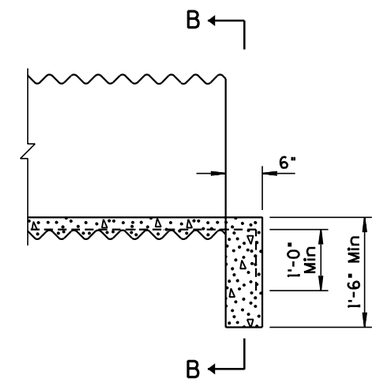

PROJECTING INSTALLATION

GENERAL NOTES

1. For lateral dimensions of invert paving, use 72° control for CMP and span for CMPA.
2. (1) Paving shall be scored laterally at 1'-6" minimum intervals along the length of the pipe.
3. Use bevel on inlet headwall only.
4. Wire mesh shall be fastened or welded to corrugation crests at intervals and in a manner approved by the Engineer. Laps shall be 6" minimum.
5. Paving shall not be placed untill backfilling is completed.
6. Concrete shall be Class B.
7. (2) See Std B-11.12 for headwall and bevel dimensions not shown.

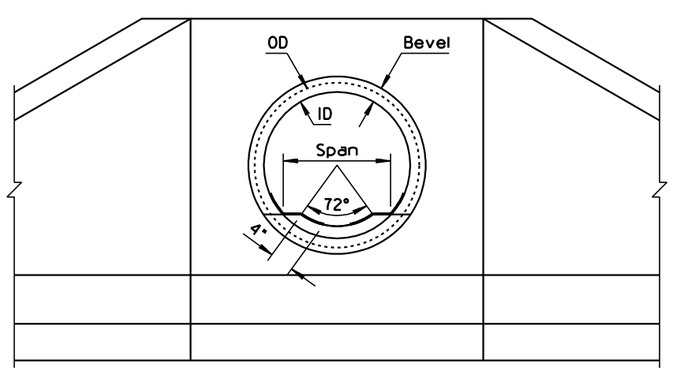

SECTION A-A

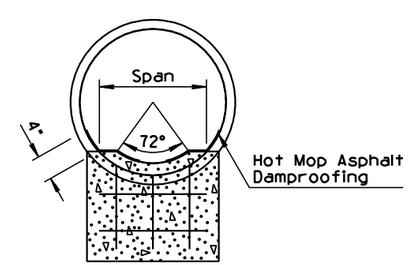

SECTION B-B

DESIGN APPROVED Henry H. Otteman	STATE OF ARIZONA DEPARTMENT OF TRANSPORTATION DIVISION OF HIGHWAYS STANDARD DRAWINGS	REV. 8/98
APPROVED FOR DISTRIBUTION Ronald C. Williams	PIPE AND PIPE ARCH, CORRUGATED METAL CONCRETE INVERT PAVING	DRAWING NO. C-13.30

NO	DESCRIPTION OF REVISIONS	MADE BY	DATE
1	REARRANGED STD	PNB	7/94
2			
3			
4			

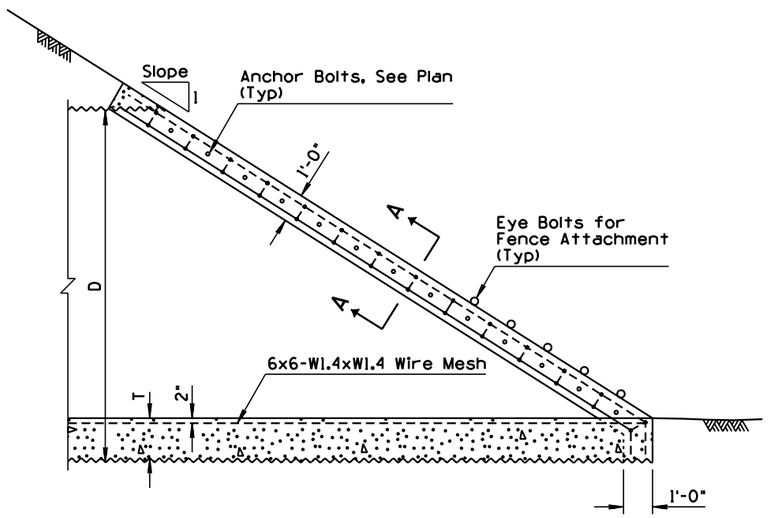

LONGITUDINAL SECTION

	D	T	S
Combination Vehicle and Cattle Pass	144"	1'-6"	Varies
Cattle Pass Only	120"	6"	Varies

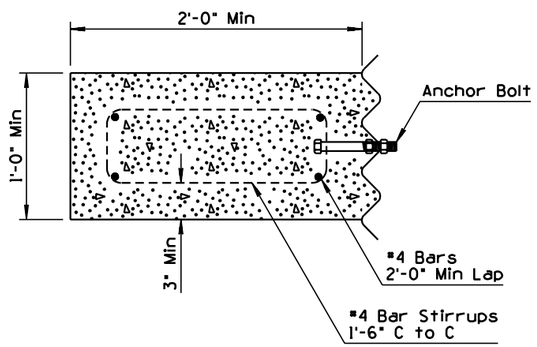

SECTION A-A

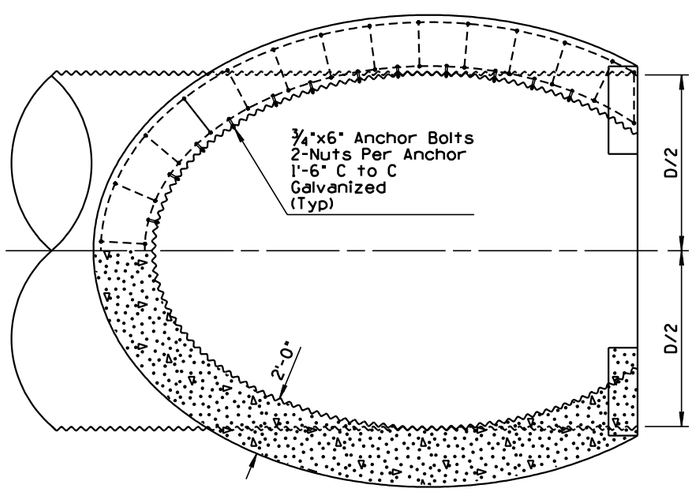

PLAN NORMAL TO SLOPE

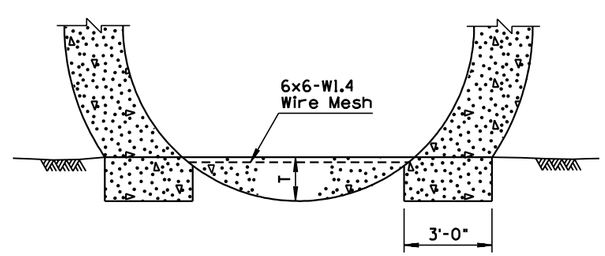

END ELEVATION

GENERAL NOTES

1. This end treatment is to be used only for those cattle and/or vehicle passes not used for drainage.
2. All concrete shall be Class B. An optional 12" AB invert paving base course and 6" of concrete may be used in the 144" diameter pipe.
3. Anchor bolts shall be retained in a horizontal position during pour with final tightening a minimum of 7 days after pour.
4. Pipe shall be backfilled before concrete bond beam is constructed. Minimum forming may be used.
5. Edges of wire mesh shall be fastened or welded to corrugation crests at intervals and in a manner approved by the Engineer. Laps shall be a minimum of 6".
6. For installation normal to roadway centerline only.

DESIGN APPROVED	STATE OF ARIZONA DEPARTMENT OF TRANSPORTATION DIVISION OF HIGHWAYS STANDARD DRAWINGS	REV.
Terry H. Otterness		7/94
APPROVED FOR DISTRIBUTION Ronald C. Williams	① PIPE, CATTLE-VEHICLE PASS, MITERED END TREATMENT	DRAWING NO. C-13.55

NO	DESCRIPTION OF REVISIONS	MADE BY	DATE
1	DELETED TYPE A CURB AND GUTTER	PNB	10/95
2	REVISED NOTE	BAF	7/97
3	ADDED NOTE 14	RLF	7/01
4			

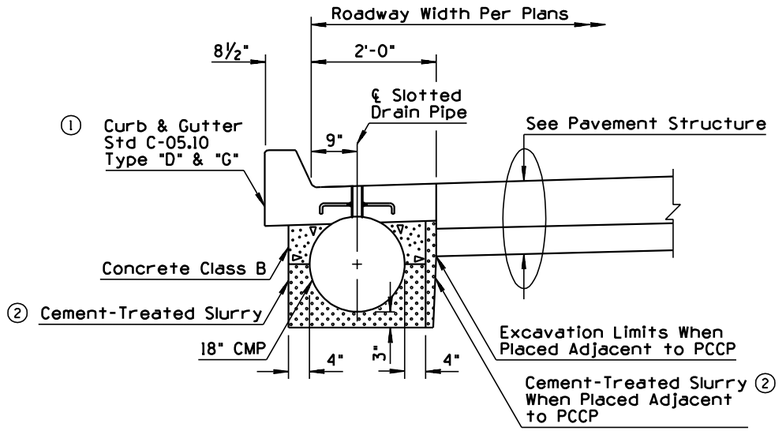

① TYPE D & G CURB AND GUTTER WITH SLOTTED DRAIN

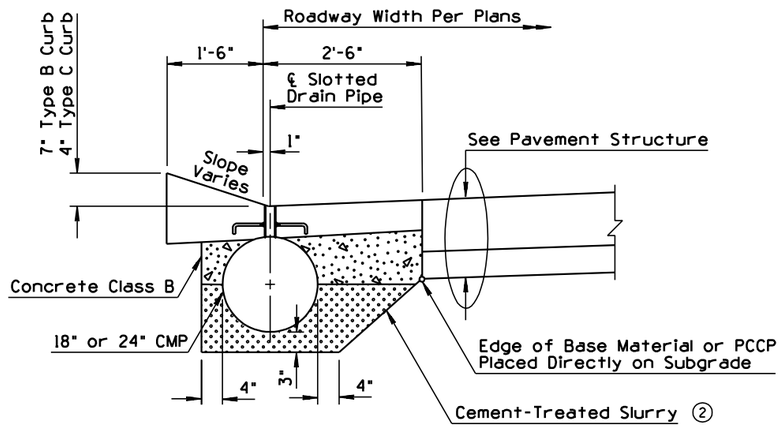

TYPE B OR C CURB AND GUTTER WITH SLOTTED DRAIN

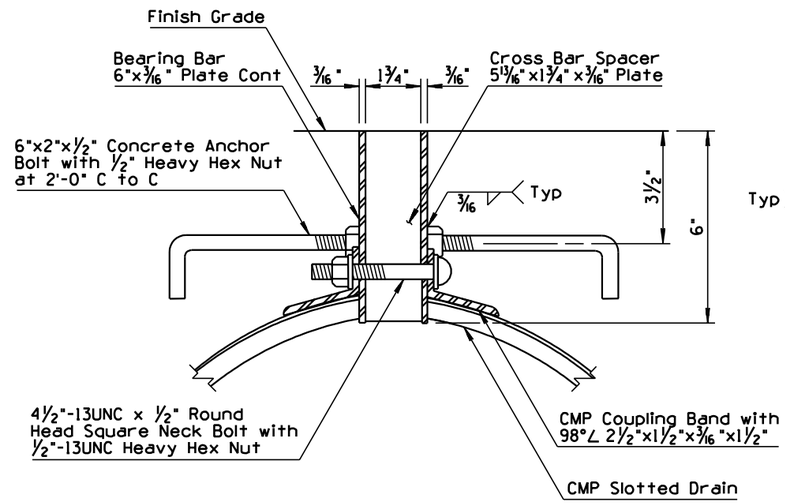

SECTION A-A

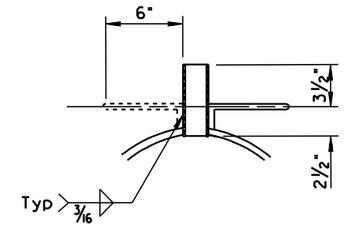

SECTION B-B

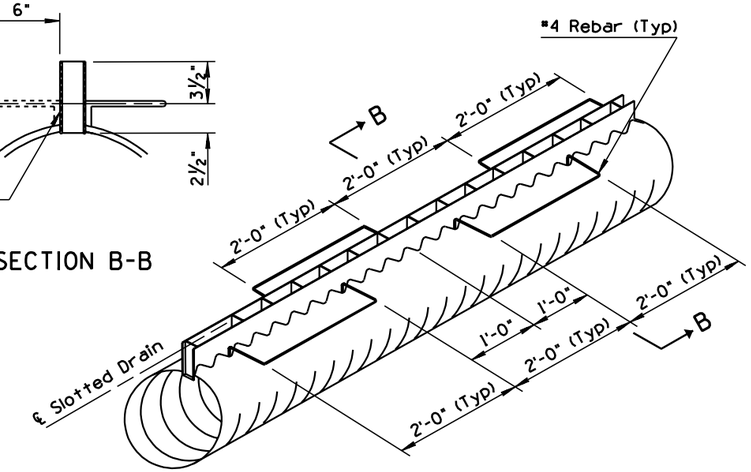

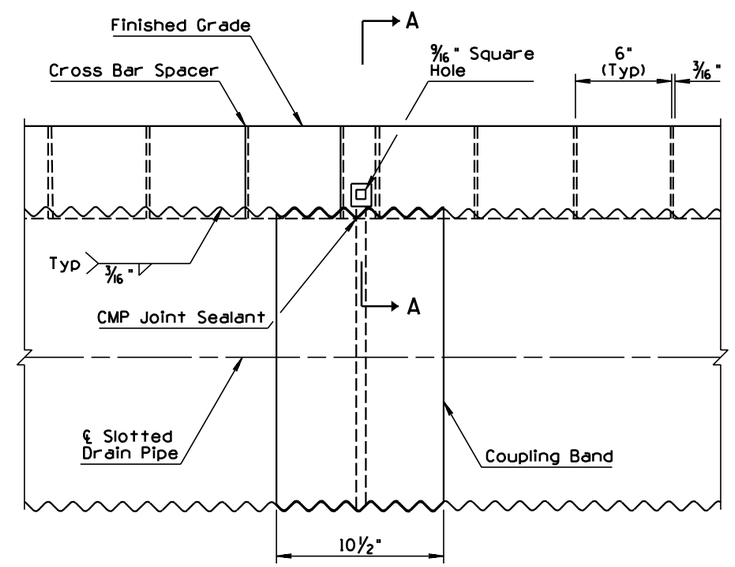

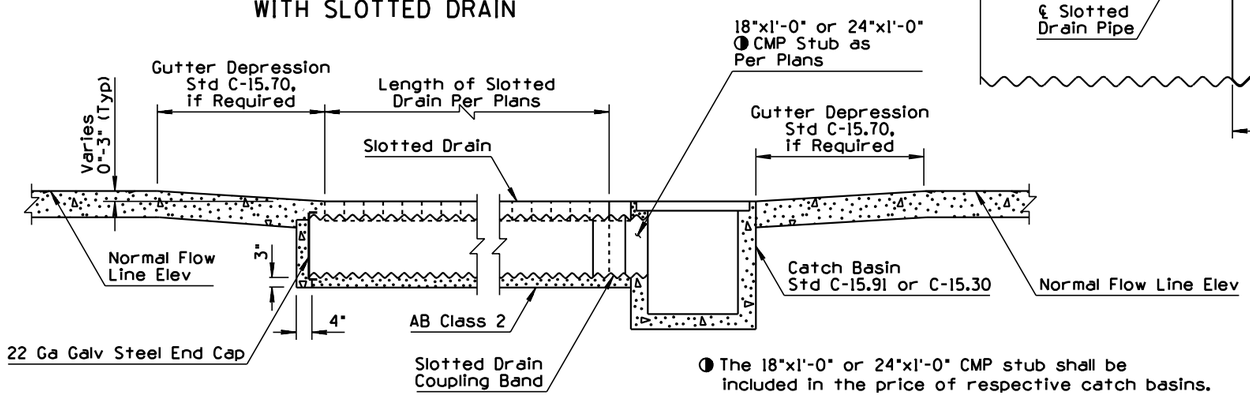

◑ The 18"x1'-0" or 24"x1'-0" CMP stub shall be included in the price of respective catch basins.

CONNECTION OF SLOTTED DRAIN TO CATCH BASIN AND SLOTTED DRAIN END CAP

GENERAL NOTES

1. Slotted drain pipe shall be 2⅔"x½" corrugated steel pipe with a minimum wall thickness of 0.064" and shall conform to the requirements of AASHTO M36.
2. All concrete shall be Class B.
3. Reinforcing steel shall conform to 1003-1, 2, Grade 40.
4. Structural steel shall conform to ASTM A36.
5. Concrete anchors shall conform to ASTM A307 and hex nuts shall conform to ASTM A563 Grade A.
6. All slotted drain pipe hardware except anchor bolts and reinforcing steel shall be given two coats of #1 paint.
7. When annular pipe is used, apply water proof sealer before attaching coupling band.
8. When helical pipe is used, it shall be formed with at least one annular corrugation at each end of each pipe section. Water proof sealer shall be applied to the annular corrugation prior to attachment of coupling band.
9. Cover slot during construction with removable tape or other acceptable substitute.
10. Slotted drain pipe shall be clean at the time of final acceptance.
11. Concrete curb and gutter thru the slotted drains shall be paid for under the respective curb and gutter items.
12. Refer to curb and gutter details for dimensions and details not shown.
13. Joints in concrete curb & gutter shall match adjoining PCCP and slotted drain bands.
14. ③ All welding shall be in accordance with Standard Specification 604-3.06.

DESIGN APPROVED	STATE OF ARIZONA DEPARTMENT OF TRANSPORTATION DIVISION OF HIGHWAYS STANDARD DRAWINGS	REV. 7/01
APPROVED FOR DISTRIBUTION	SLOTTED DRAIN DETAILS	DRAWING NO. C-13.60

NO	DESCRIPTION OF REVISIONS	MADE BY	DATE
1	REARRANGED STD	PNB	7/94
2			
3			
4			

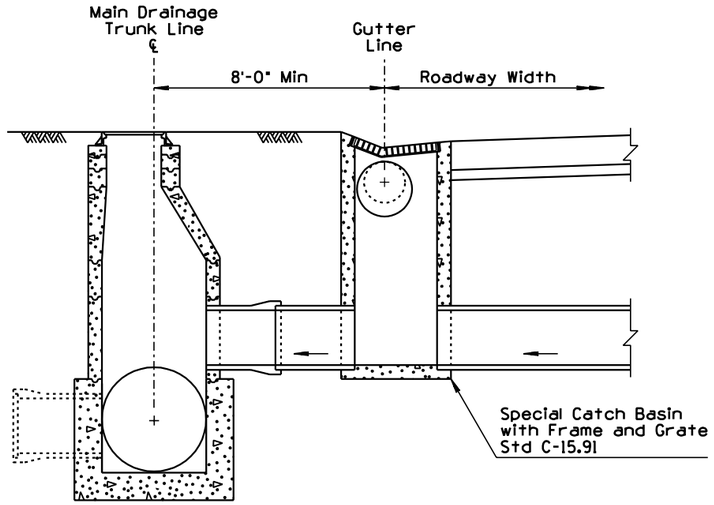

SECTION A-A
TYPICAL CONNECTION BETWEEN
CATCH BASIN AND MANHOLE

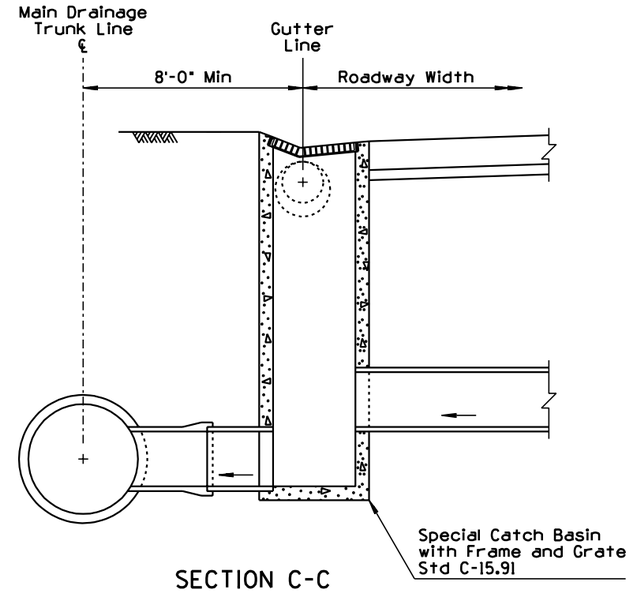

SECTION C-C
TYPICAL CONNECTION BETWEEN
CATCH BASIN AND MAIN STORM DRAIN

GENERAL NOTES

1. Pipe collars not required where direct catch basins connections can be made within 7° of a normal 90° installation, either horizontally or vertically.
2. "T" connections direct to the main drainage trunk line should be avoided and used only where manhole connections are impractical.

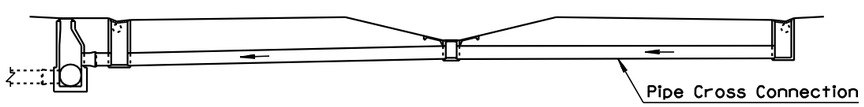

SECTION B-B

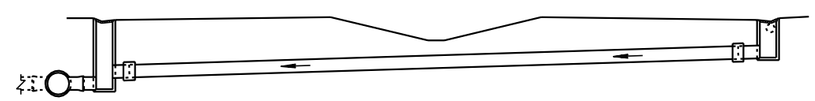

SECTION D-D

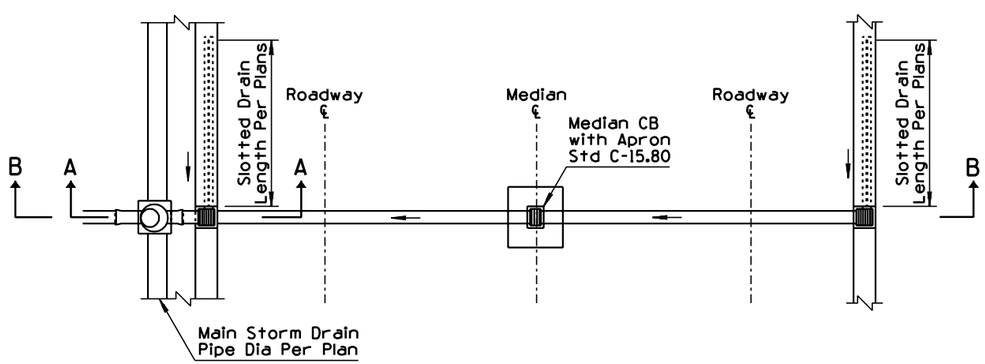

PLAN
TYPICAL SLOTTED DRAIN AND CATCH BASIN
INSTALLATION WITH MANHOLE

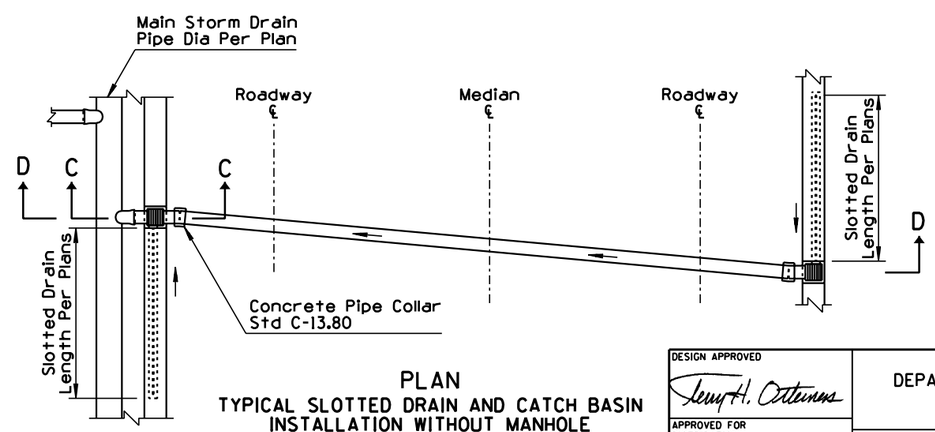

PLAN
TYPICAL SLOTTED DRAIN AND CATCH BASIN
INSTALLATION WITHOUT MANHOLE

DESIGN APPROVED APPROVED FOR DISTRIBUTION	STATE OF ARIZONA DEPARTMENT OF TRANSPORTATION DIVISION OF HIGHWAYS STANDARD DRAWINGS	REV. 7/94
	① SLOTTED DRAIN INSTALLATION DETAILS	DRAWING NO. C-13.65

NO	DESCRIPTION OF REVISIONS	MADE BY	DATE
1	REARRANGED STD	PNB	7/94
2			
3			
4			

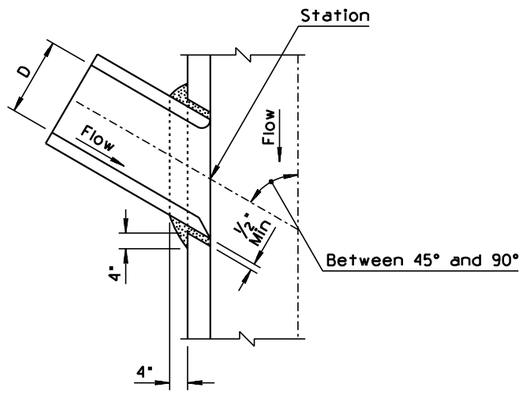

SECTION A-A

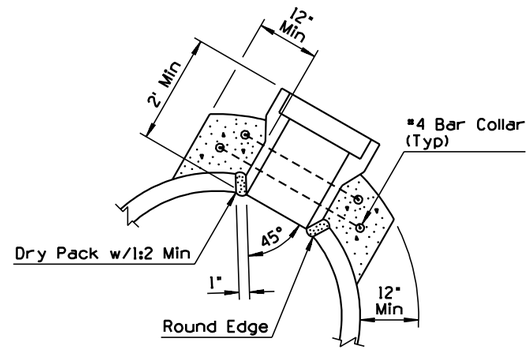

CONNECTION DETAIL
TYPE 2

GENERAL NOTES

1. Prefabricated tees shall be used when the outside diameter of the inlet pipe exceeds one half of the inside diameter of the main storm drain, except when the manholes are shown on plans.
2. Centerline of the inlet pipe shall intersect the centerline of the main storm drain except when elevation "S" is shown on plans.
3. If ∠ is 45° or less, type 1 shall be used.
4. All concrete shall be class B.
5. All reinforcing steel shall conform to 1003-1, 2, grade 40.
6. Reinforcing steel shall have 2" minimum cover.

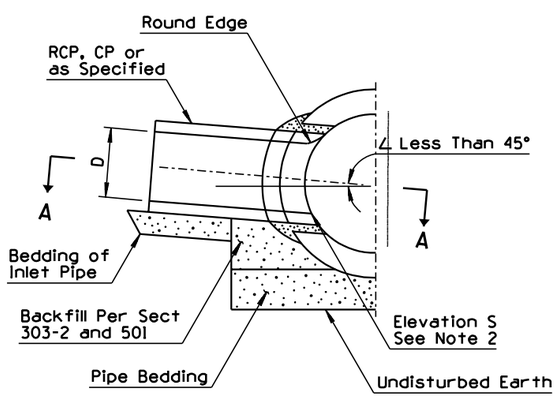

SIDE INLET
TYPE 1

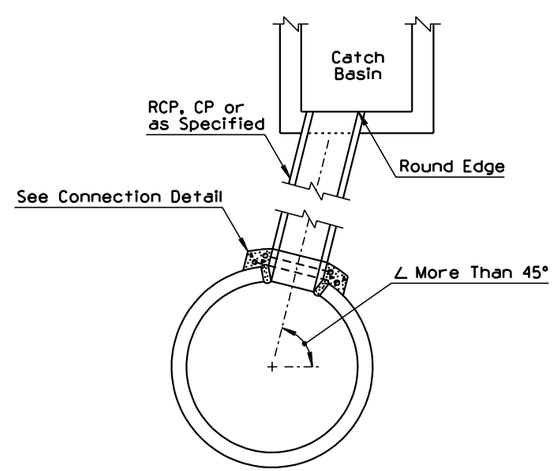

CATCH BASIN ABOVE STORM DRAIN
TYPE 2

DESIGN APPROVED Terry H. Otterness	STATE OF ARIZONA DEPARTMENT OF TRANSPORTATION DIVISION OF HIGHWAYS STANDARD DRAWINGS	REV. 7/94
APPROVED FOR DISTRIBUTION Ronald C. Williams	① STORM DRAIN CONNECTION DETAILS	DRAWING NO. C-13.70

NO	DESCRIPTION OF REVISIONS	MADE BY	DATE
1	ADDED NOTE	RLF	7/01
2			
3			
4			

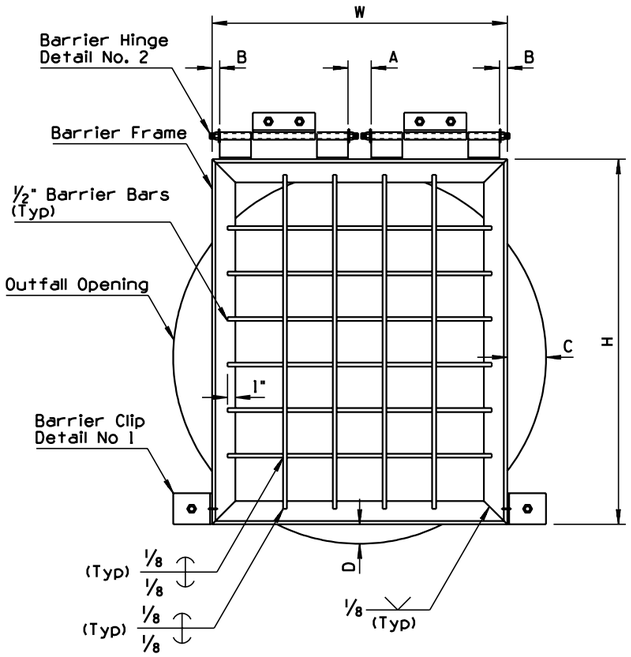

PIPE ACCESS BARRIER FRONT ELEVATION

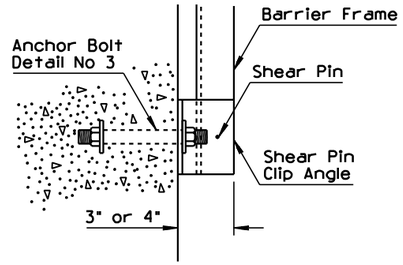

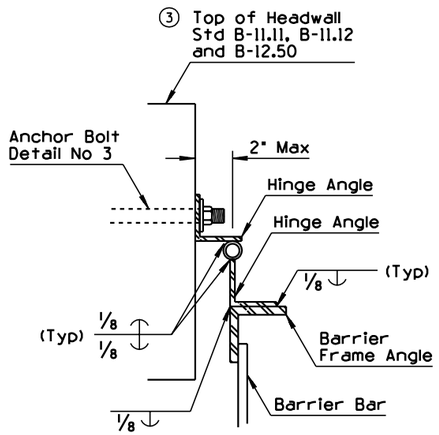

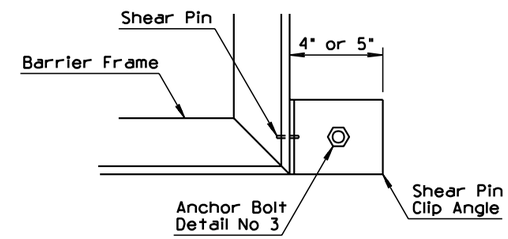

DETAIL NO. 1

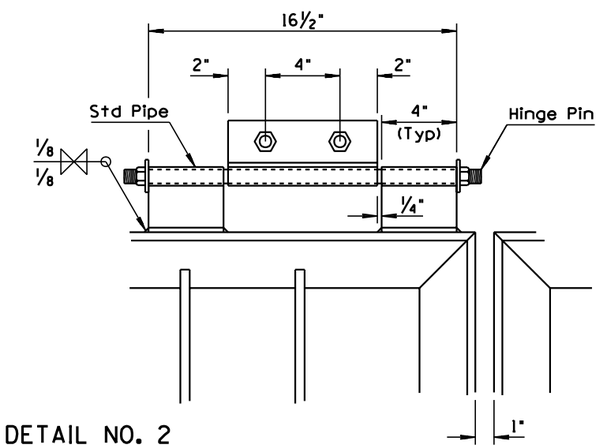

DETAIL NO. 2

GENERAL NOTES

1. All Shear pin angles shall fit snug and true to face. Cover with waterproof grease prior to installation of pin.
2. Shear pin holes in the angle shall be drilled for a tight fit of the pins.
3. Both ends of the shear pins shall be peened after installation.
4. Shear pin material shall be commercially pure aluminum wire alloy 1100, Temper 0, Federal Spec. QQ-A-411.
5. Galvanize all ferrous parts after fabrication.
6. Frame and hinge angles shall have the outstanding legs out.
7. All steel shall be in accordance with ASTM A36.
8. Barrier bars shall be equally spaced.
9. Hinge pin material shall be bolt stock and threaded on both ends so nut and lock washer are flush with the lower angle. Cover pin with waterproof grease prior to installation. Upset or damage exposed threads after installation.
10. ① All welding shall be in accordance with Standard Specification 604-3.06.

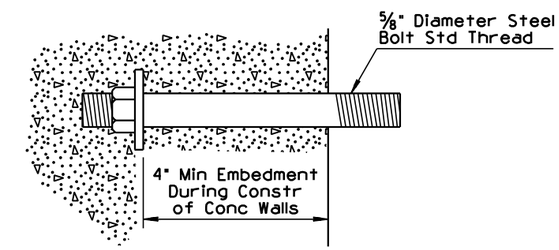

DETAIL NO. 3

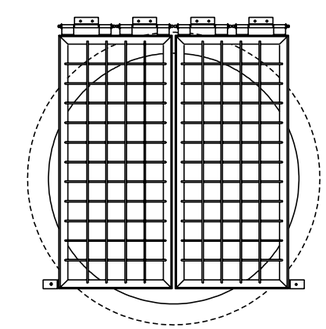

INSTALLATION DETAIL
FOR DOUBLE GATES

ACCESS BARRIER GATE DIMENSION SCHEDULE

Size of Outfall Pipe	No. of Barrier Gates	Frame Angles	Shear Pin Clip Angles	Shear Pins	Hinge Pins	Hinge Angles	Hinge Standard Pipe	No. & Length Of Vert. Bars	No. & Length Of Horz. Bars	H (Out to Out of Frame Angles)	W (Out to Out of Frame Angles)	A	B	C	D	Str. Steel (lbs)
30"	1	2"x2"x¼"	4"x4"x¼"	2-⅛"Φ	½"Φ	2"x2"x¼"	¾"	4-31"	4-34"	33"	36"	3"	0"	-3"	2"	78.0
36"	1	2"x2"x¼"	4"x4"x¼"	2-⅛"Φ	½"Φ	2"x2"x¼"	¾"	4-31"	4-34"	33"	36"	3"	0"	0"	3.5"	78.0
42"	1	2"x2"x¼"	4"x4"x¼"	2-⅛"Φ	½"Φ	2"x2"x¼"	¾"	4-41"	5-34"	43"	36"	3"	0"	3"	0.5"	88.6
48"	1	3"x3"x7/16"	5"x3"x¼"	2-⅛"Φ	¾"Φ	2½"x2½"x¼"	1"	4-46"	6-34"	50"	38"	3"	1"	5"	1"	179.2
54"	1	3"x3"x7/16"	5"x3"x¼"	2-⅛"Φ	¾"Φ	2½"x2½"x¼"	1"	5-52"	7-40"	56"	44"	5"	3"	5"	2"	206.5
60"	1	3"x3"x7/16"	5"x3"x¼"	2-⅛"Φ	¾"Φ	2½"x2½"x¼"	1"	6-58"	8-46"	62"	50"	9"	4"	5"	3"	235.6
66"	1	3"x3"x7/16"	5"x3"x¼"	2-⅛"Φ	¾"Φ	2½"x2½"x¼"	1"	7-64"	9-52"	68"	56"	11"	6"	5"	4"	266.4
72"	2	3"x3"x7/16"	5"x3"x¼"	2-⅛"Φ	¾"Φ	2½"x2½"x¼"	1"	4-69"*	9-34"*	73"	38"	3"	1"	-2.5"	5"	443.6
78"	2	3"x3"x7/16"	5"x3"x¼"	2-⅛"Φ	¾"Φ	2½"x2½"x¼"	1"	4-75"*	10-34"*	79"	38"	3"	1"	0.5"	5"	468.4
84"	2	3"x3"x7/16"	5"x3"x¼"	2-⅛"Φ	¾"Φ	2½"x2½"x¼"	1"	4-81"*	11-34"*	85"	38"	3"	1"	3.5"	5"	493.2
90"	2	3"x3"x7/16"	5"x3"x¼"	2-⅛"Φ	¾"Φ	2½"x2½"x¼"	1"	4-87"*	12-36"*	91"	40"	3"	2"	4.5"	5"	527.0
96"	2	3"x3"x7/16"	5"x3"x¼"	2-⅛"Φ	¾"Φ	2½"x2½"x¼"	1"	5-93"*	13-39"*	97"	43"	4"	3"	4.5"	5"	579.0

* Per Gate

DESIGN APPROVED John L. Lewis	STATE OF ARIZONA DEPARTMENT OF TRANSPORTATION DIVISION OF HIGHWAYS STANDARD DRAWINGS	REV. 7/01
APPROVED FOR DISTRIBUTION Ronald C. Williams	STORM DRAIN OUTLET DETAILS	DRAWING NO. C-13.75 Sheet 1 of 2

NO	DESCRIPTION OF REVISIONS	MADE BY	DATE
1	DELETED NOTE	PNB	7/94
2	DELETED DETAIL	PNB	7/94
3			
4			

GENERAL NOTES

1. Compact soil at end of pipe plug to 95% of maximum density.
2. If depth of cover is less than 5' or greater than 10', increase plug thickness a minimum of 4".

1

1

1

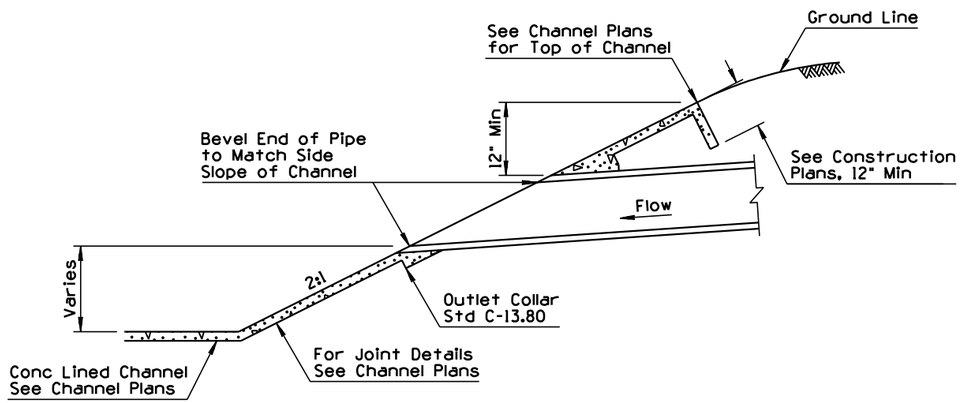

DRAINAGE OUTLET INTO CHANNEL

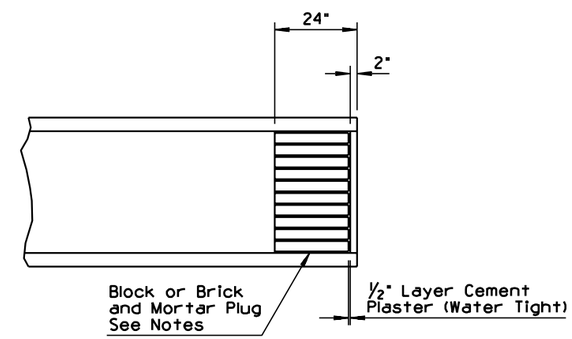

STORM DRAIN PLUG

2

DESIGN APPROVED Terry H. Ottemas	STATE OF ARIZONA DEPARTMENT OF TRANSPORTATION DIVISION OF HIGHWAYS STANDARD DRAWINGS	REV. 7/94
APPROVED FOR DISTRIBUTION Ronald C. Williams	STORM DRAIN OUTLET DETAILS	DRAWING NO. C-13.75 Sheet 2 of 2

NO	DESCRIPTION OF REVISIONS	MADE BY	DATE
1	REVISED DIMENSION	PNB	7/94
2	ADDED DETAIL	PNB	7/94
3	REARRANGED STD	PNB	7/94
4			

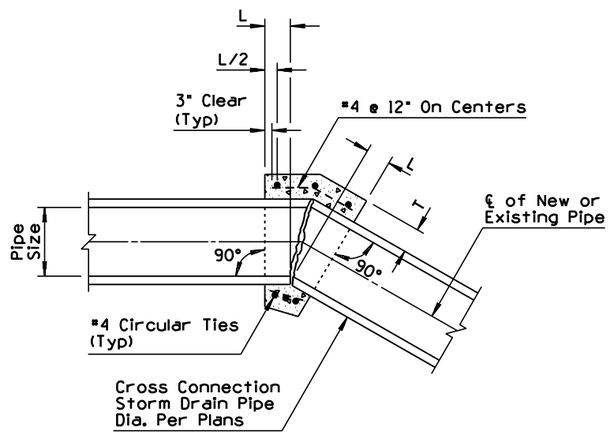

CONCRETE PIPE COLLAR

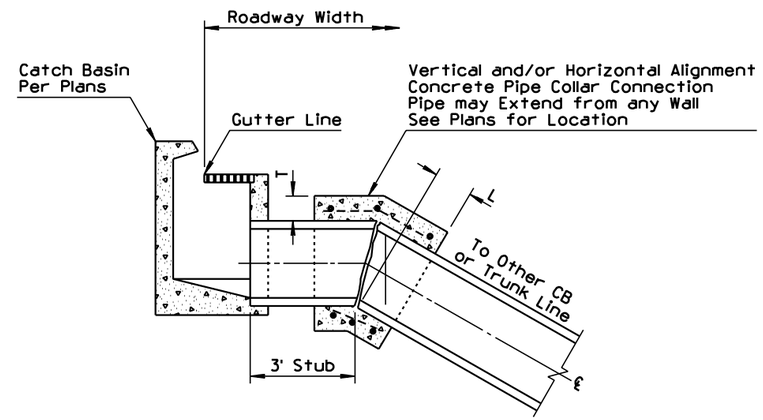

TYPICAL LATERAL CONNECTIONS TO CATCH BASINS WITH CONCRETE COLLARS

GENERAL NOTES

1. All Concrete shall be Class B.
2. All reinforcing steel shall conform to 1003-1, 2, Grade 40.
3. (1) All reinforcing steel shall have 3" minimum clear cover.
4. A concrete collar shall be required where pipes of different diameters or materials are joined or where the design change in alignment or grade exceeds that allowed for a standard joint.
5. When pipes of different diameters are joined with a concrete collar, "l" & "T" shall be those of the larger diameter.
6. The diameter of the circular ties shall be the outside diameter of pipe + T.
7. Pipe ends to be trimmed such that the maximum distance between pipes at any point is 2".

(2)

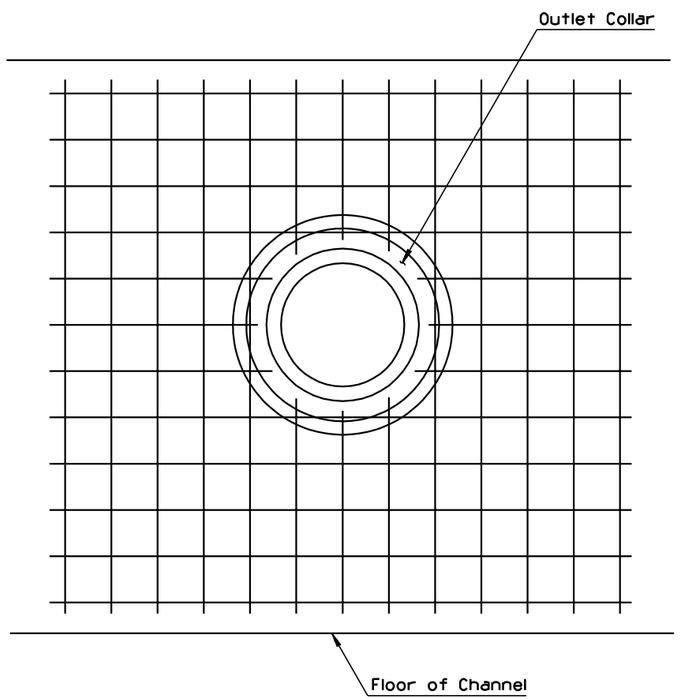

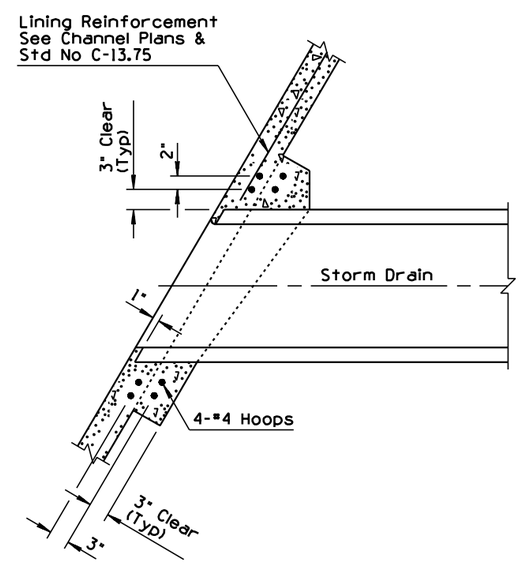

OUTLET COLLAR DETAIL

PIPE COLLAR TABLE			
Pipe Size	L	T	#4 Ties
12"	1.00'	4"	3
18"	1.00'	5"	3
24"	1.00'	6"	3
30"	1.50'	8"	3
36"	1.50'	8"	3
42"	1.75'	10"	4
48"	1.75'	10"	4
52"	1.75'	10"	4
60"	1.75'	11"	4
66"	2.00'	11"	5
72"	2.00'	14"	5
78"	2.00'	14"	5
84"	2.25'	16"	5
96"	2.25'	16"	5

DESIGN APPROVED: Terry H. Otterness	STATE OF ARIZONA DEPARTMENT OF TRANSPORTATION DIVISION OF HIGHWAYS STANDARD DRAWINGS	REV. 7/94
APPROVED FOR DISTRIBUTION: Ronald C. Williams	(3) PIPE COLLAR DETAILS	DRAWING NO. C-13.80

NO	DESCRIPTION OF REVISIONS	MADE BY	DATE
1	REVISED NOTE # 5	RLF	7/01
2			
3			
4			

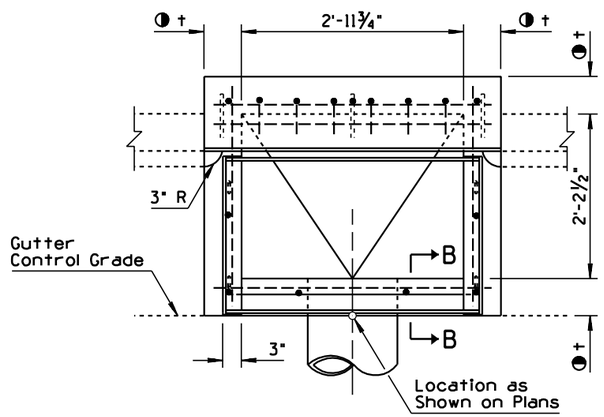

PLAN - CATCH BASIN TYPE 1 - SINGLE

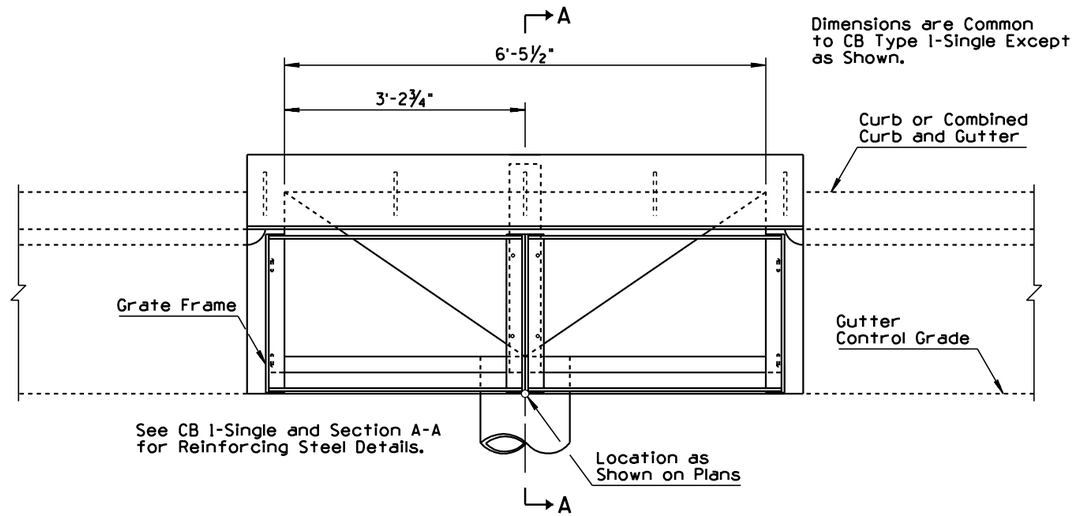

PLAN - CATCH BASIN TYPE 1 - DOUBLE

GENERAL NOTES

1. Catch basin used at roadway sag.
2. Pipes can be placed in any wall.
3. Sump Floor shall have a wood trowel finish and a minimum 4:1 slope in all directions to outlet.
4. All structural steel shall be ASTM A36.
5. (1) All welding shall be in accordance with Standard Specification 604-3.06.
6. Grate, frame, beam and nose plate shall be given one shop coat of No. 1 paint.
7. All concrete shall be Class B.
8. Construction joints and drains shall be placed to meet field conditions. See Std C-15.70.
9. Any specified inlet depression shall be warped to opening according to Std C-15.70.
10. Silicone sealant shall be placed between the grate frame and PCCP, recessed ¼" from the pavement surface.
11. Curb opening areas, sq. ft., for type 1-single and type 1-double equal 0.25 and 0.54, respectively, for each inch of "h" + inlet depression - 2.35". See Std C-15.70.
12. See Std C-15.50 for grate and frame details and grate opening areas.
13. ◑ t = 6" when H is 8' or less.
    8" when H is greater than 8'.
    See Section B-B.
    ■ = 9" when pavement is AC.
    Match pavement thickness when pavement is PCCP.

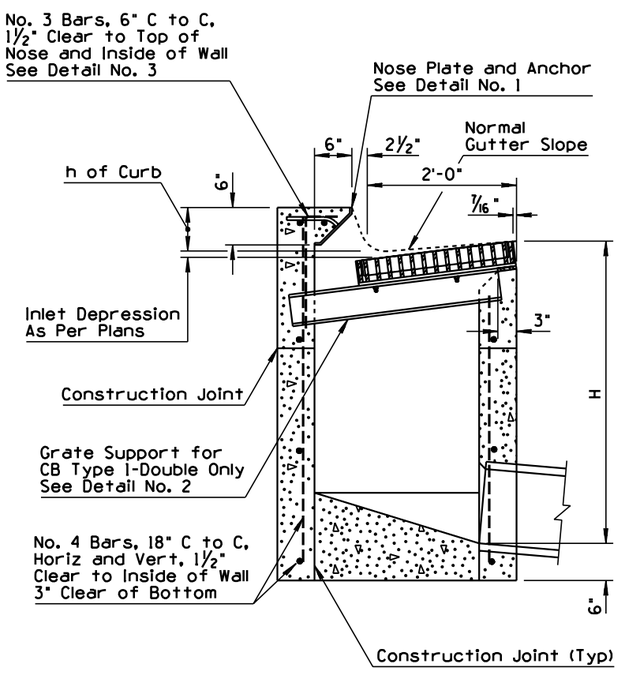

SECTION A-A

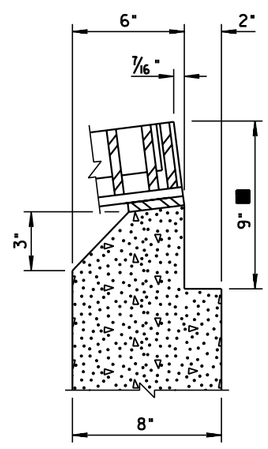

SECTION B-B

USE THIS SECTION
WHEN t=8"

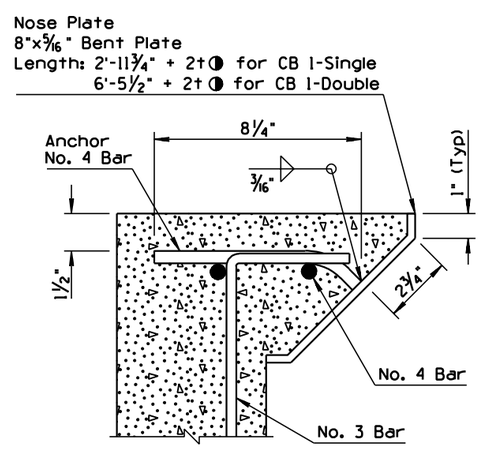

DETAIL NO. 1

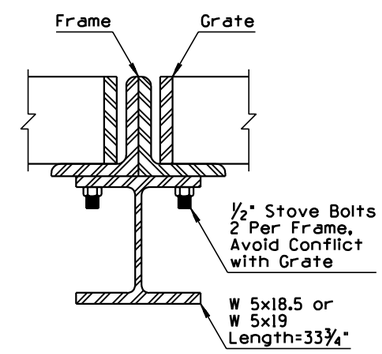

DETAIL NO. 2

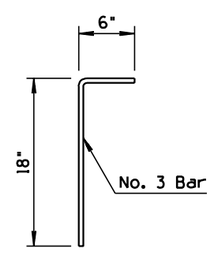

DETAIL NO. 3

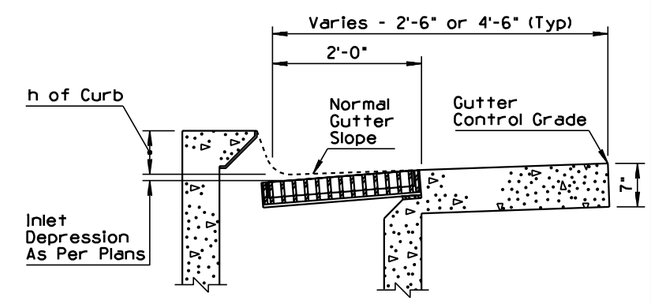

DETAIL NO. 4

DESIGN APPROVED	STATE OF ARIZONA DEPARTMENT OF TRANSPORTATION DIVISION OF HIGHWAYS STANDARD DRAWINGS	REV. 7/01
APPROVED FOR DISTRIBUTION	CATCH BASIN, TYPE 1	DRAWING NO. C-15.10

NO	DESCRIPTION OF REVISIONS	MADE BY	DATE
1	REVISED NOTE # 11	RLF	7/01
2			
3			
4			

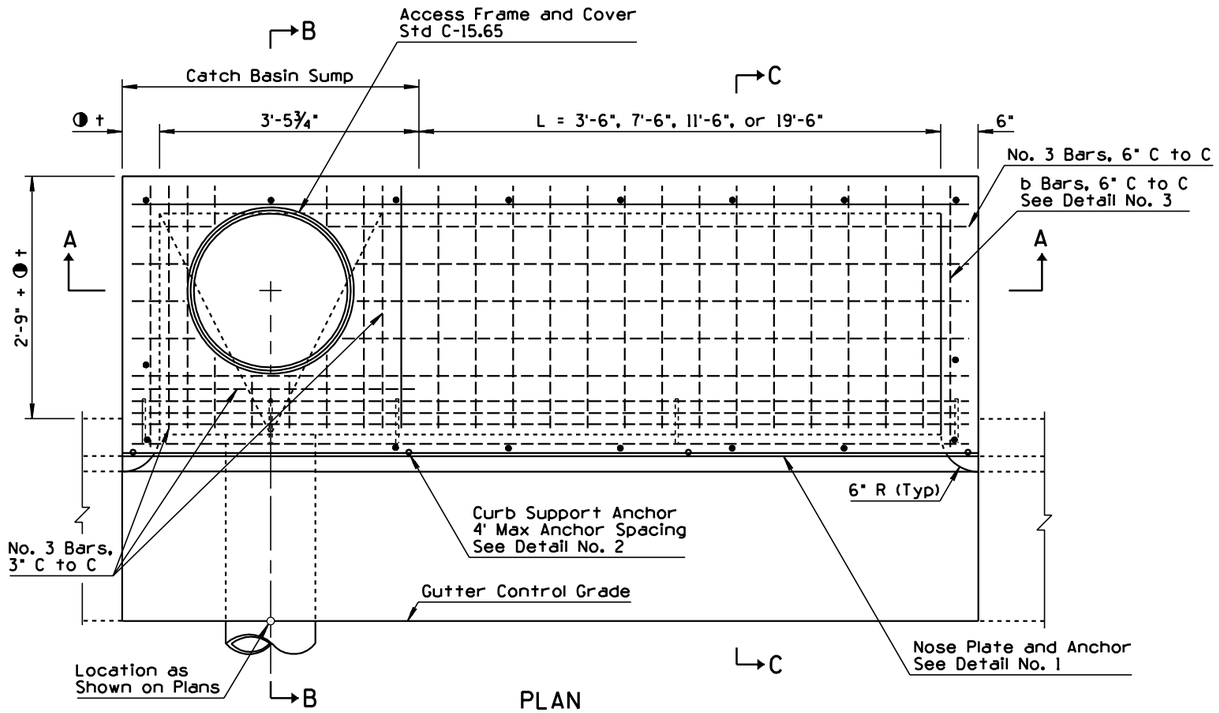

PLAN

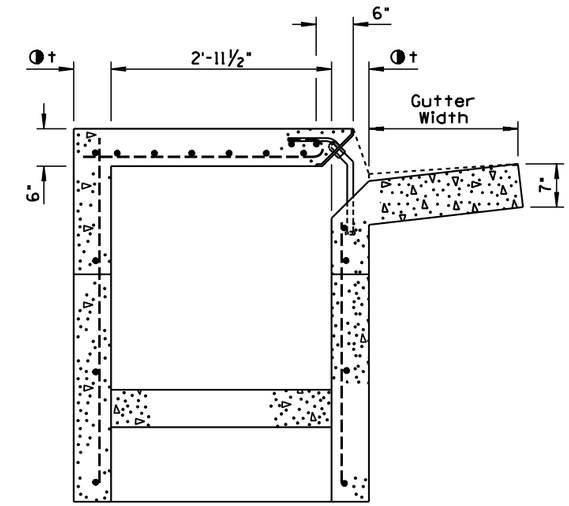

SECTION C-C

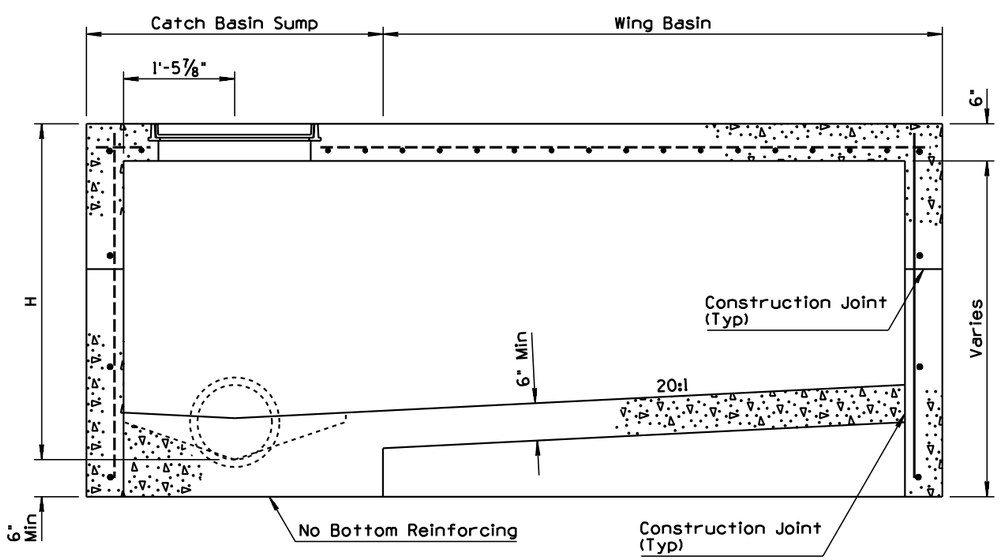

SECTION A-A
USE THIS SECTION WHEN H=5' OR LESS

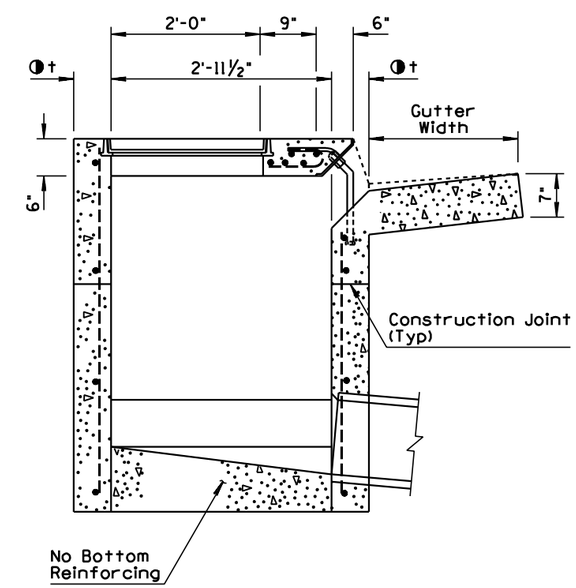

SECTION B-B

GENERAL NOTES

1. Catch basin can be used on grade or at roadway sag.
2. Catch basin has three configurations:
   Sump Only-Sump portion of catch basin (See Detail No. 4).
   Single Wing (Illustrated)-Sump with wing basin upstream.
   Double Wing-Sump with symetrical wing basins each side.
3. Pipes can be placed in any wall except wall adjacent to wing basin.
4. Floor shall have a wood trowel finish. Slope of the sump portion of the catch basin along the axis of the pipe shall be 4:1.
5. Any specified inlet depression shall be warped to opening according to Std C-15.70.
6. All structural steel shall be ASTM A36.
7. Nose plate, access frame and cover shall be given one shop coat of No. 1 paint.
8. All concrete shall be Class B.
9. All reinforcing bars shall be #4, 1'-6" C to C both ways and 1½" clear to inside of walls and outside of wing basin floor except as shown.
10. Curb opening area (sq ft) per inch of curb "h" + gutter depression = curb opening length (ft) x 0.0833.
11. (1) All welding shall be in accordance with Standard Specification 604-3.06.
12. Construction joints and drains shall be placed to meet field conditions. See Std C-15.70.
13. ◑t = 6" when H is 8' or less.
    8" when H is greater than 8'.

DESIGN APPROVED John L. Lewis	STATE OF ARIZONA DEPARTMENT OF TRANSPORTATION DIVISION OF HIGHWAYS STANDARD DRAWINGS	REV. 7/01
APPROVED FOR DISTRIBUTION Ronald C. Williams	CATCH BASIN, TYPE 3	DRAWING NO. C-15.20 Sheet 1 of 2

NO	DESCRIPTION OF REVISIONS	MADE BY	DATE
1			
2			
3			
4			

GENERAL NOTES

1. See sheet 1 of 2 for other dimensions, notes and reinforcing steel.
2. ◑t = 6" when H is 8' or less.
   8" when H is greater than 8'.

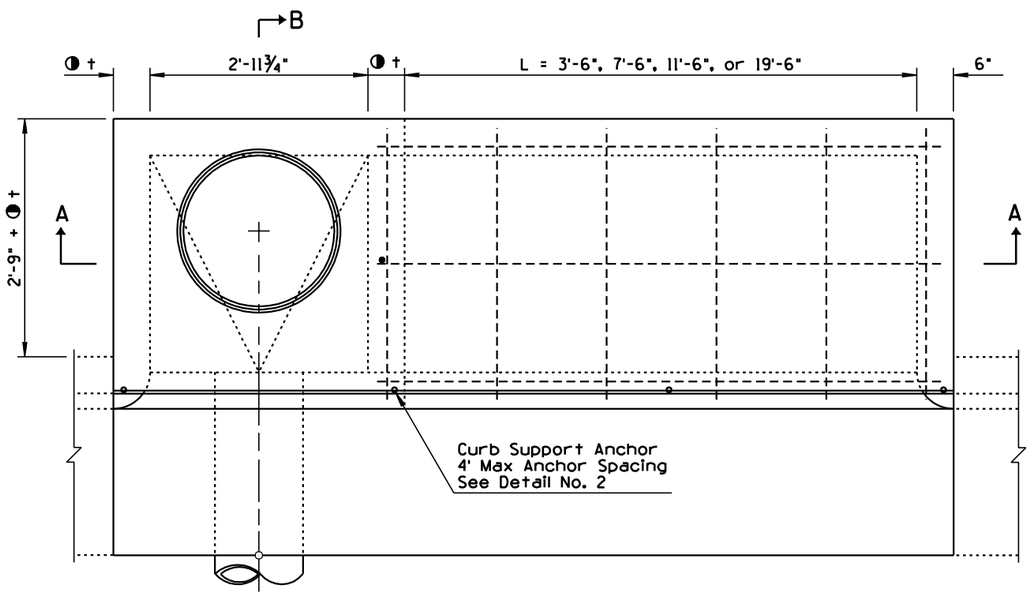

PLAN

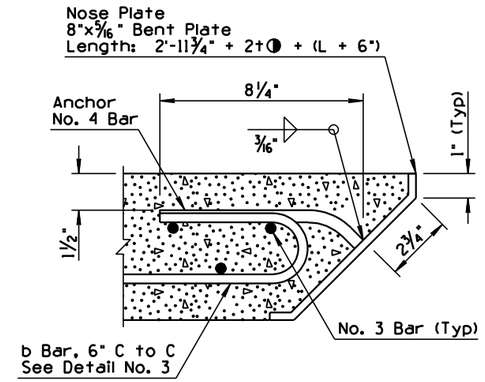

DETAIL NO. 1

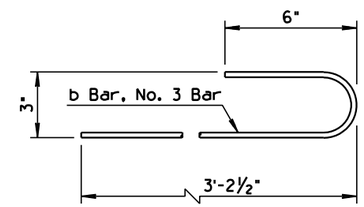

DETAIL NO. 3

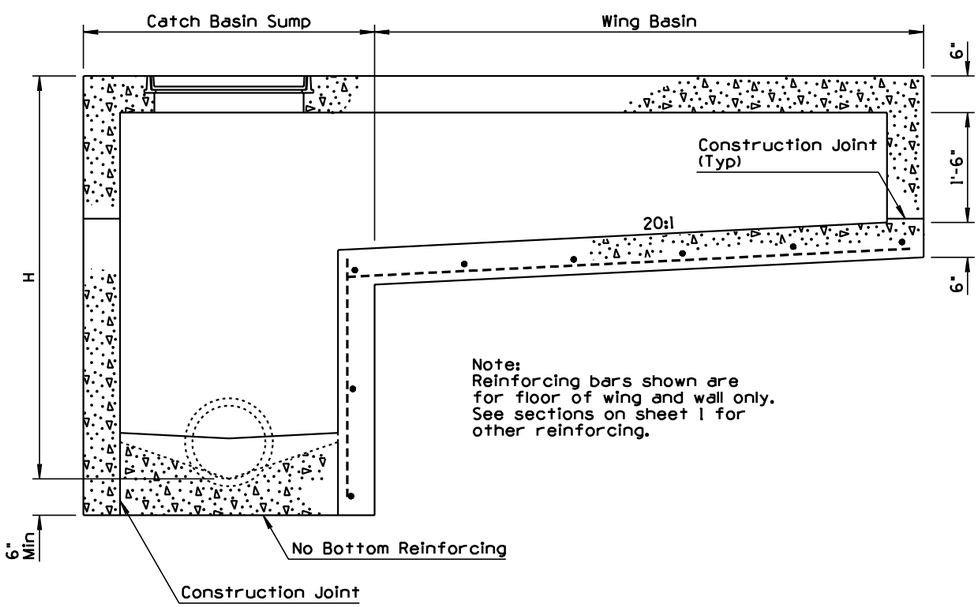

SECTION A-A
USE THIS SECTION WHEN H IS GREATER THAN 5'

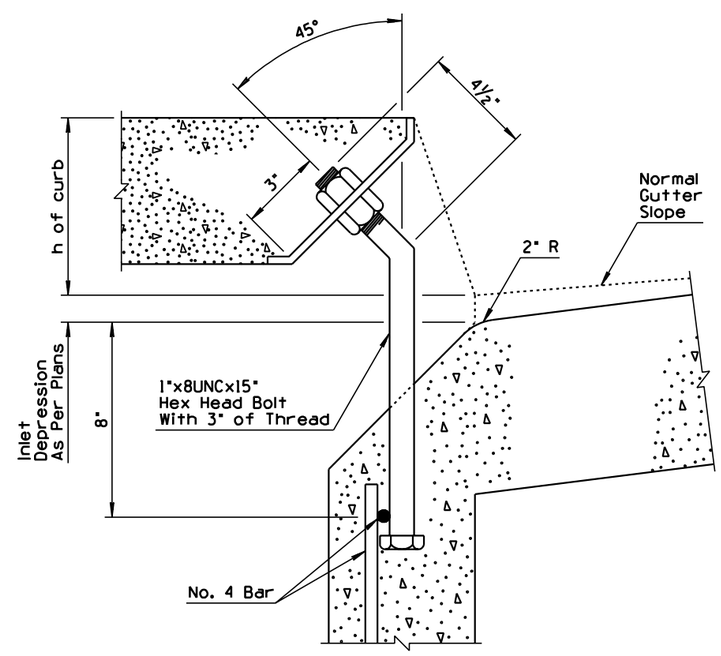

DETAIL NO. 2
CURB SUPPORT ANCHOR

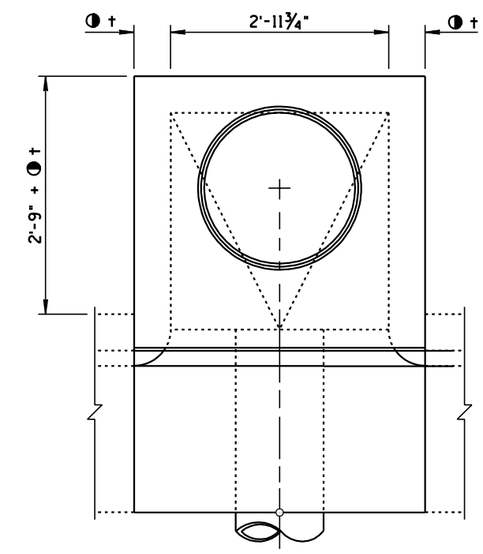

DETAIL NO. 4

DESIGN APPROVED Terry H. Otterness	STATE OF ARIZONA DEPARTMENT OF TRANSPORTATION DIVISION OF HIGHWAYS STANDARD DRAWINGS	ISSUE 5/97
APPROVED FOR DISTRIBUTION Ronald C Williams	CATCH BASIN, TYPE 3	DRAWING NO. C-15.20 Sheet 2 of 2

NO	DESCRIPTION OF REVISIONS	MADE BY	DATE
1	REVISED STD FOR NEW FRAME	PNB	5/97
2	REVISED DETAIL	PNB	5/97
3	REVISED FLOOR FOR POURING AFTER WALLS	PNB	5/97
4	ADDED SECTION OR DETAIL	PNB	5/97
5	REVISED NOTE	PNB	5/97
6	ADDED NOTE	PNB	5/97
7			
8			

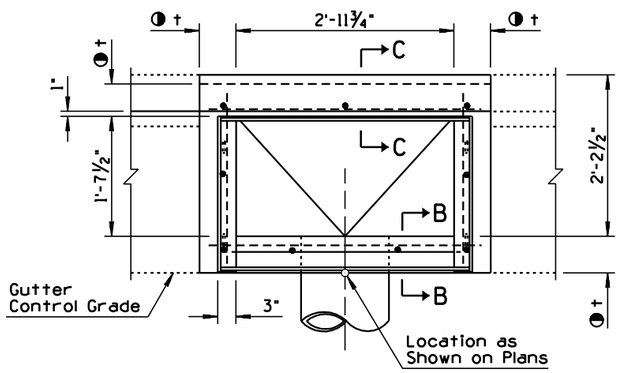

PLAN - CATCH BASIN TYPE 4 - SINGLE

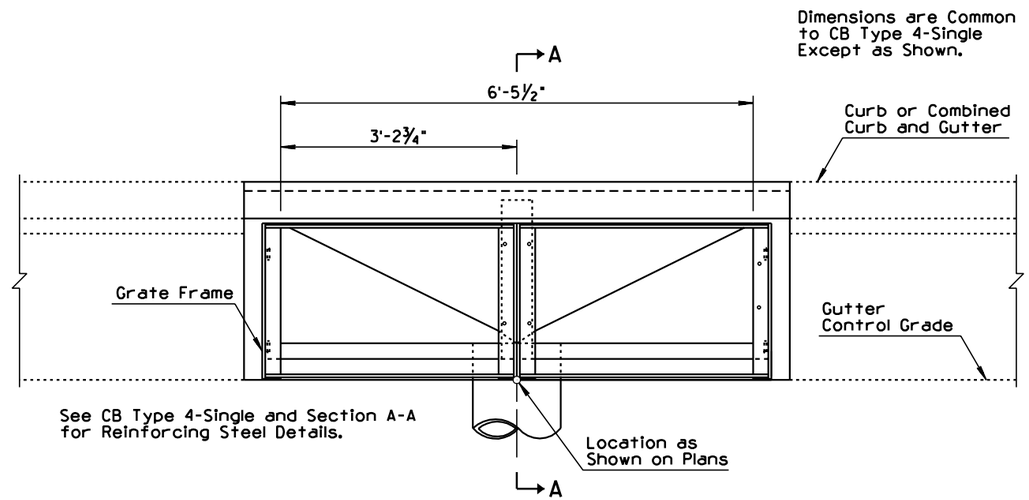

PLAN - CATCH BASIN TYPE 4 - DOUBLE

GENERAL NOTES

(6) 1. Catch basin can be used on grade or at roadway sag.

2. Pipes can be placed in any wall.

(5) 3. Floor shall have a wood trowel finish and a minimum 4:1 slope along the axis of the pipe toward the pipe.

4. Curb over catch basin shall not be constructed until catch basin concrete has set for a minimum of 24 hours.

(6) 5. Catch basin can be used with curb and gutter (as shown) or without.

6. See Stds C-15.50 for grate and frame details and opening areas.

7. Any specified inlet depression shall be warped to opening according to Std C-15.70.

8. All structural steel shall be ASTM A36.

9. Grate, frame and beam shall be given one shop coat of No. 1 paint.

10. All concrete shall be Class B.

11. Construction joints and drains shall be placed to meet field conditions. See Std C-15.70.

(6) 12. Silicone sealant shall be placed between the grate frame and PCCP, recessed ¼" from the pavement surface.

(6) 13. See Detail No. 2 for catch basin with wide gutter.

14. ◑t = 6" when H is 8' or less.
8" when H is greater than 8'.
See Section B-B.

■ 9" when pavement is AC.
Match pavement thickness when pavement is PCCP.

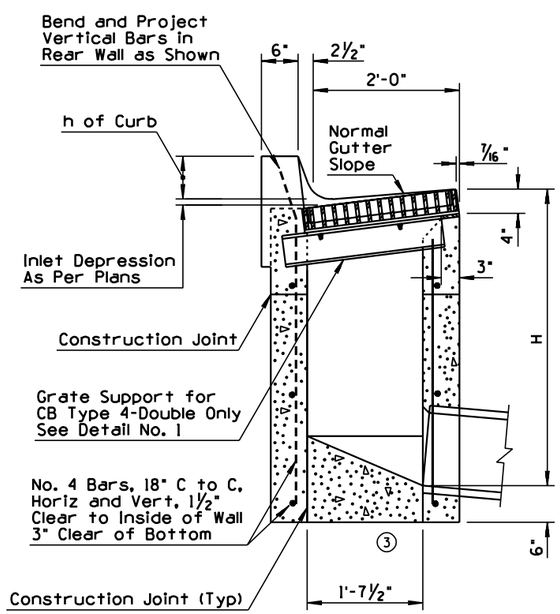

SECTION A-A

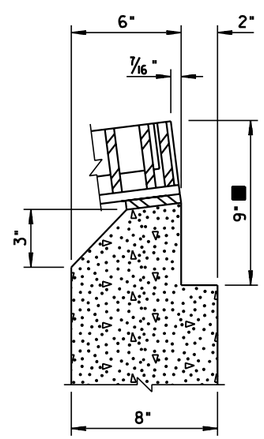

USE THIS SECTION
WHEN t=8"

SECTION B-B ②

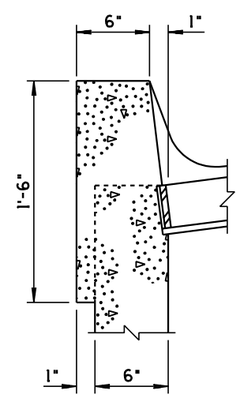

SECTION C-C ④

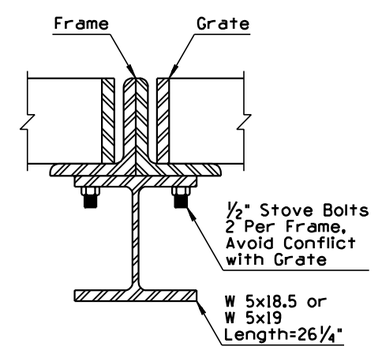

DETAIL NO. 1

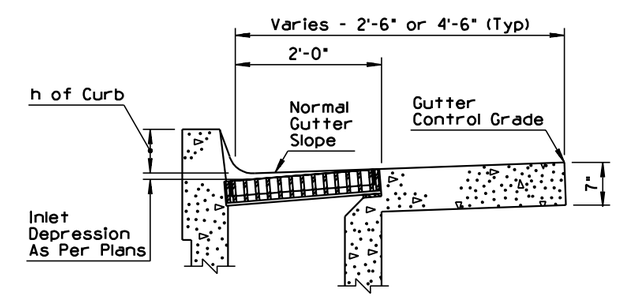

DETAIL NO. 2 ④

DESIGN APPROVED Henry H. Otteness	STATE OF ARIZONA DEPARTMENT OF TRANSPORTATION DIVISION OF HIGHWAYS STANDARD DRAWINGS	REV. 5/97
APPROVED FOR DISTRIBUTION Ronald C. Williams	① CATCH BASIN, TYPE 4	DRAWING NO. C-15.30

NO	DESCRIPTION OF REVISIONS	MADE BY	DATE
1	REVISED NOTE # 11	RLF	7/01
2			
3			
4			

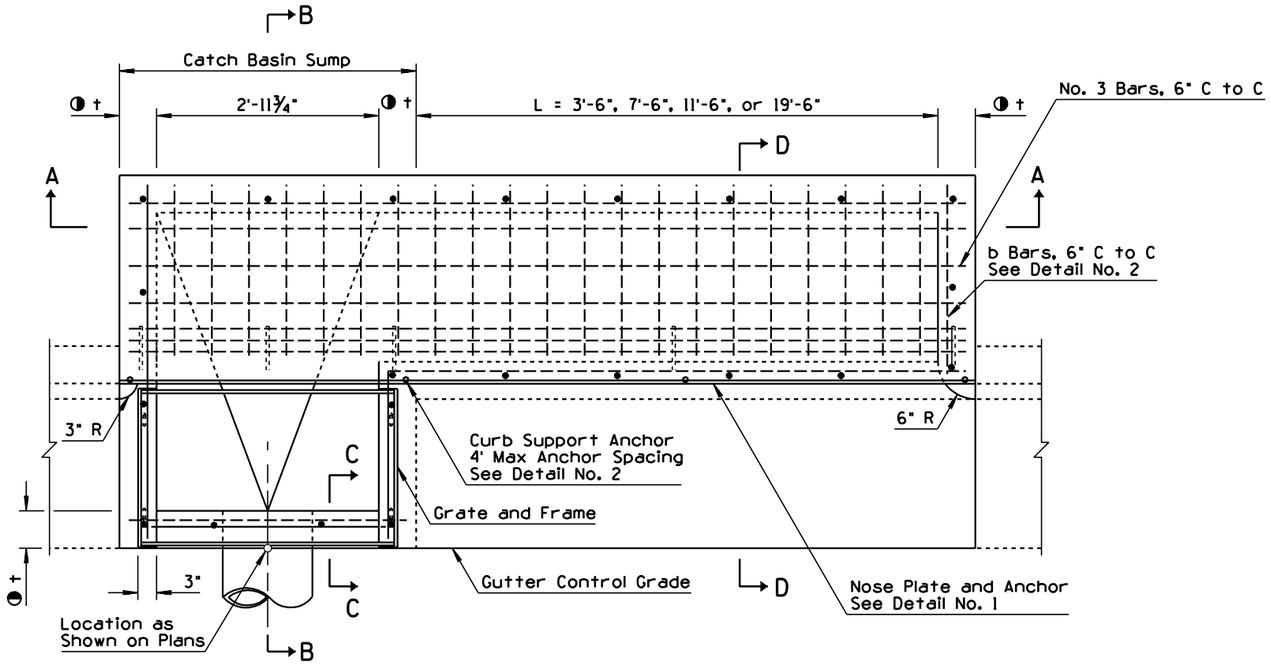

PLAN

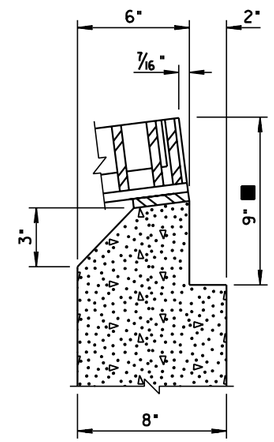

SECTION C-C

USE THIS SECTION
WHEN t=8"

GENERAL NOTES

1. Catch basin can be used on grade or at roadway sag.
2. Catch basin has three configurations:
   Sump Only-Sump portion of catch basin
   Single Wing (Illustrated)-Sump with wing basin upstream.
   Double Wing-Sump with symitrical wing basins each side.
3. Pipes can be placed in any wall except wall adjacent to a wing basin.
4. Floor shall have a wood trowel finish. Slope of the sump portion of the catch basin along the axis of the pipe shall be 4:1.
5. Any specified inlet depression shall be warped to opening according to Std C-15.70.
6. All structural steel shall be ASTM A36.
7. Nose plate shall be given one shop coat of No. 1 paint.
8. All concrete shall be Class B.
9. All reinforcing bars shall be No. 4, 1'-6" C to C both ways and 1½" clear to inside of walls and outside of wing basin floor except as shown.
10. Curb opening area (sq ft) per inch of curb "h" + inlet depression = curb opening length (ft) x 0.0834.
11. (1) All welding shall be in accordance with Standard Specification 604-3.06.
12. See Std C-15.50 for grate and frame details and opening areas.
13. Construction joints and drains shall be placed to meet field conditions. Std C-15.70.
14. Silicone sealant shall be placed between the grate frame and PCCP, recessed ¼" from the pavement surface.
15. ◑t = 6" when H is 8' or less.
    8" when H is greater than 8'.
    See Section C-C.
16. ■ = 9" when pavement is AC.
    Match pavement thickness when pavement is PCCP.

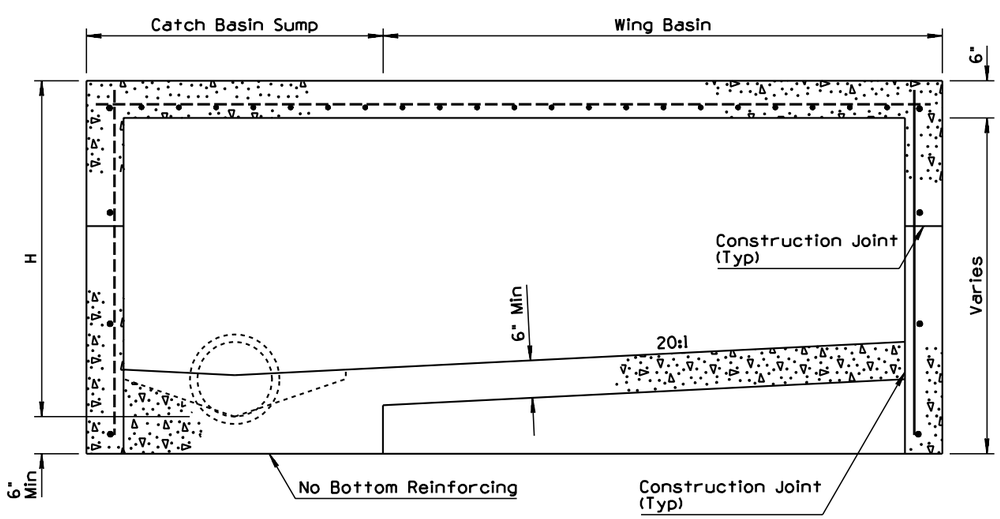

SECTION A-A
USE THIS SECTION WHEN H=5' OR LESS

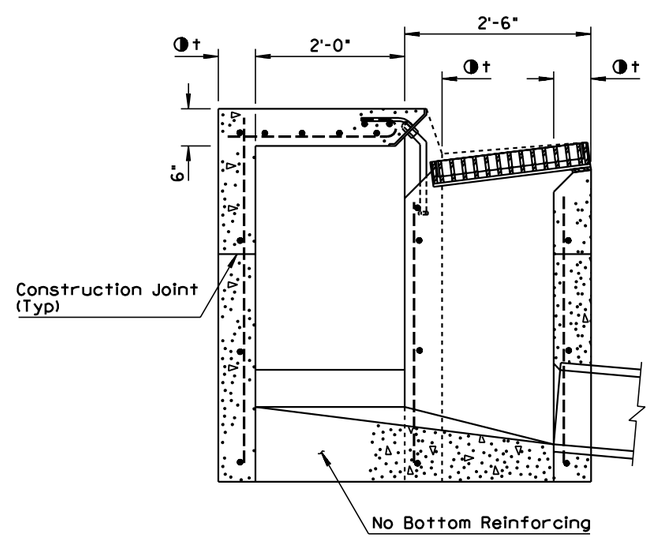

SECTION B-B

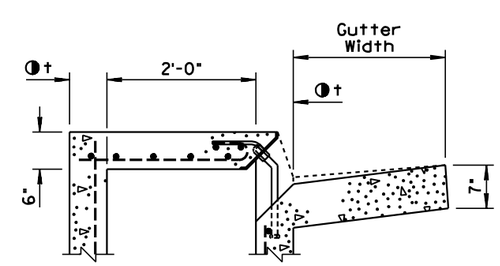

SECTION D-D

DESIGN APPROVED	STATE OF ARIZONA DEPARTMENT OF TRANSPORTATION DIVISION OF HIGHWAYS STANDARD DRAWINGS	REV. 7/01
APPROVED FOR DISTRIBUTION	CATCH BASIN, TYPE 5	DRAWING NO. C-15.40 Sheet 1 of 2

NO	DESCRIPTION OF REVISIONS	MADE BY	DATE
1			
2			
3			
4			

GENERAL NOTES

1. See sheet 1 of 2 for other dimensions, notes and reinforcing steel.
2. ◑t = 6" when H is 8' or less.
   8" when H is greater than 8'.

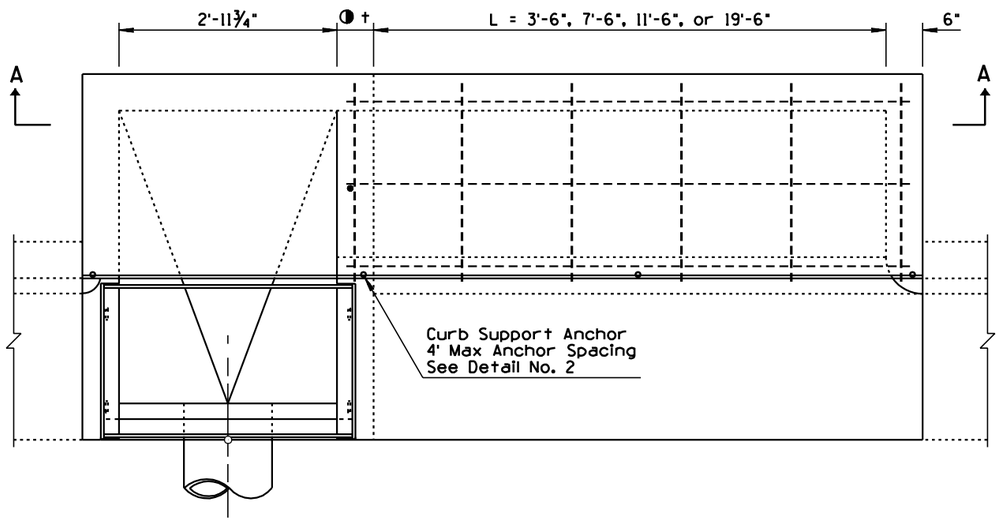

PLAN

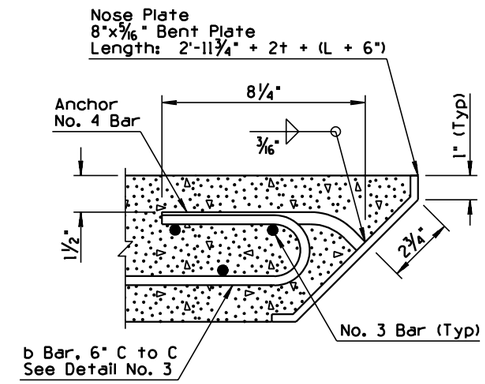

DETAIL NO. 1

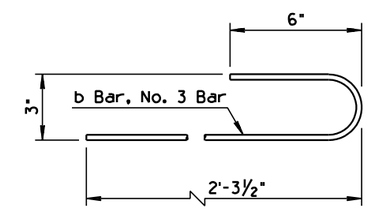

DETAIL NO. 3

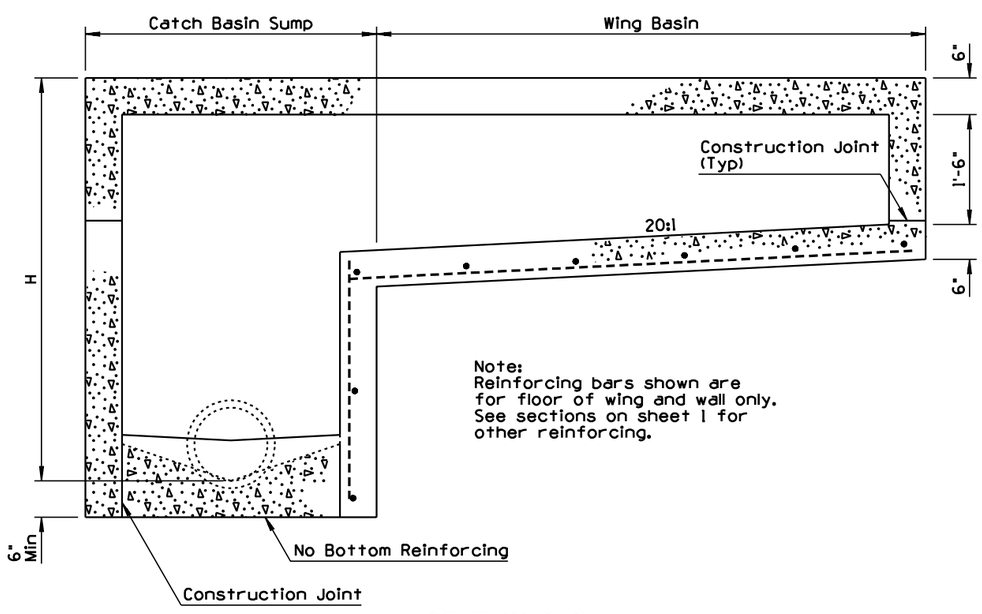

SECTION A-A
USE THIS SECTION WHEN H IS GREATER THAN 5'

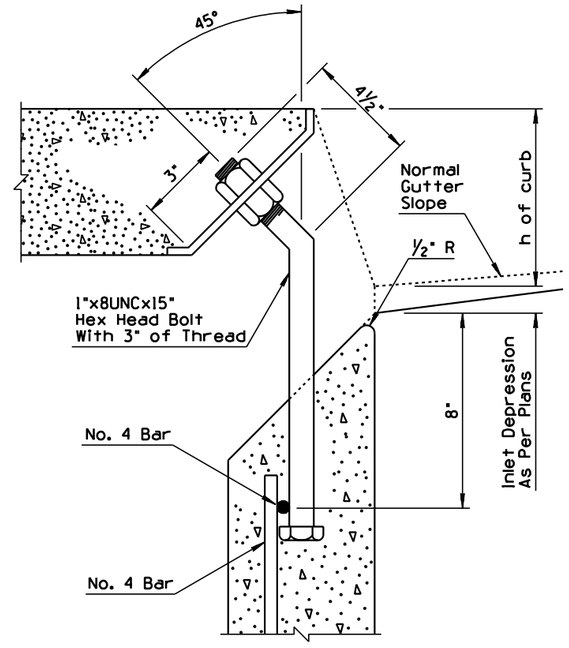

DETAIL NO. 2
CURB SUPPORT ANCHOR

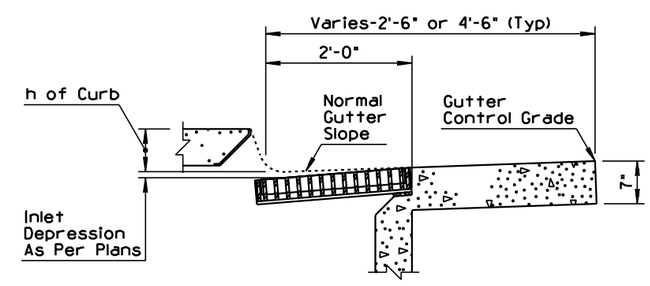

DETAIL NO. 4

DESIGN APPROVED	STATE OF ARIZONA DEPARTMENT OF TRANSPORTATION DIVISION OF HIGHWAYS STANDARD DRAWINGS	ISSUE 5/97
APPROVED FOR DISTRIBUTION	CATCH BASIN, TYPE 5	DRAWING NO. C-15.40 Sheet 2 of 2

NO	DESCRIPTION OF REVISIONS	MADE BY	DATE
1	REVISED GRATE DIMENSIONS	RT/RLF	7/01
2	ADDED SECTION B-B	RT/RLF	7/01
3	REVISED GENERAL NOTE NO. 2	RT/RLF	7/01
4	REVISED GRATE OPENING AREA	RT/RLF	7/01

NO	DESCRIPTION OF REVISIONS	MADE BY	DATE
5	ADDED GENERAL NOTES NO. 6, 7 & 8	RT/RLF	7/01
6			
7			
8			

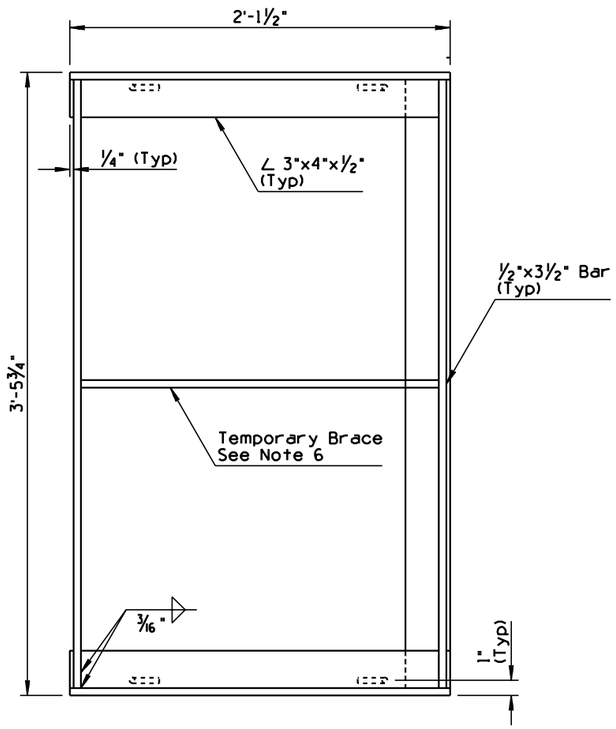

PLAN

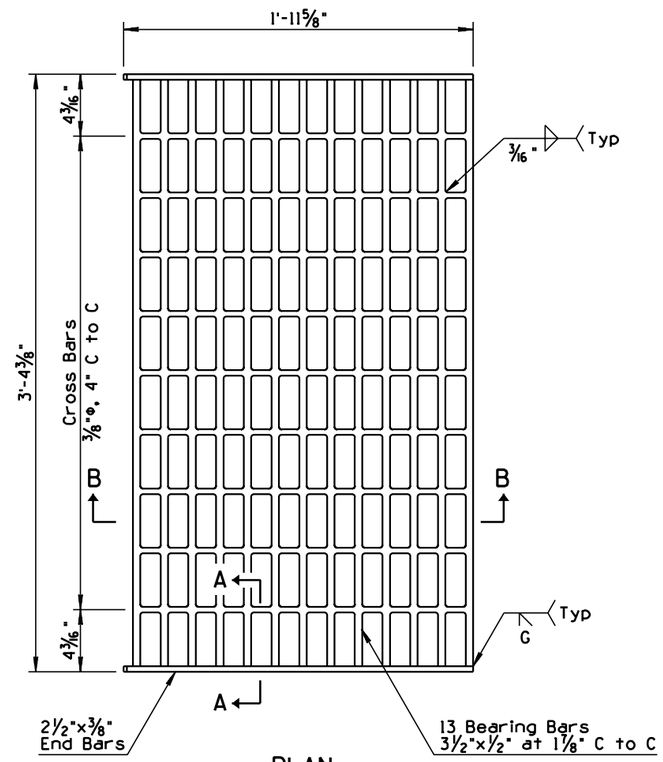

PLAN

GENERAL NOTES

1. Grating units and frames shall be fabricated from structural steel ASTM A36 except as noted.
3. 2. All welding shall be in accordance with Standard Specification 604-3.06.
3. The completed assembly shall be given one shop coat of No. 1 paint.
4. Frames and grates shall fit to a maximum rock of 0.093" at any point.
4. 5. Grate opening is 3.60 Sq. Ft.
5. 6. Bracing of frame is recommended for handling and placement purposes.
5. 7. Frame and Grate to be used with Stds C-15.10, C-15.30 and C-15.40 .
5. 8. Grate may be used with Std C-15.92 Frame.

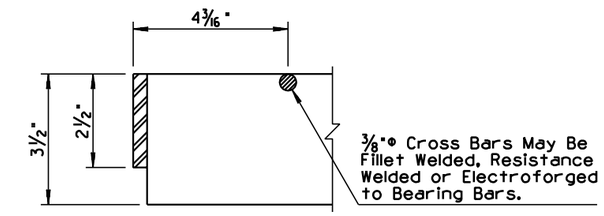

SECTION A-A

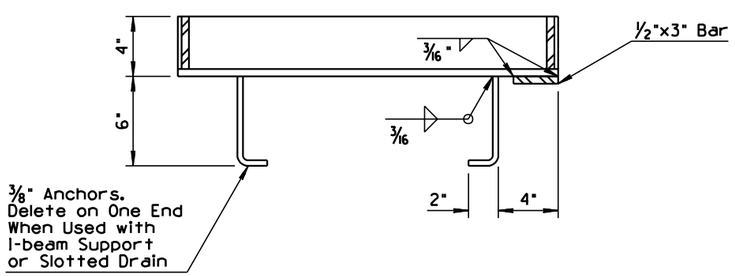

SECTION

FRAME

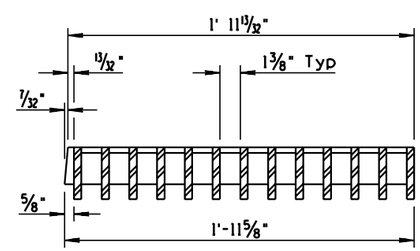

SECTION B-B 2

GRATE 1

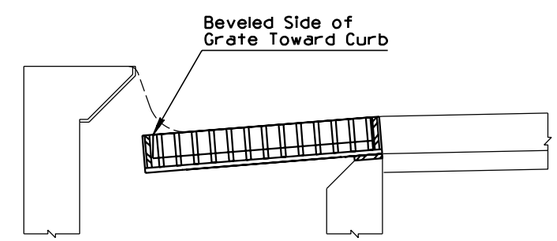

TYPICAL INSTALLATION

C-15.10 Catch Basin Shown
Similar for C-15.30 and C-15.40

DESIGN APPROVED	STATE OF ARIZONA DEPARTMENT OF TRANSPORTATION DIVISION OF HIGHWAYS STANDARD DRAWINGS	REV. 7/01
APPROVED FOR DISTRIBUTION	CATCH BASIN FRAME AND GRATE	DRAWING NO. C-15.50

NO	DESCRIPTION OF REVISIONS	MADE BY	DATE
1			
2			
3			
4			

GENERAL NOTES

1. Cover shall be non-locking.
2. Frame and cover shall be cast iron or structural steel.
3. Catch basin access frame and cover is for use in sidewalk area only.
4. Cover shall be filled with concrete and broom finished.

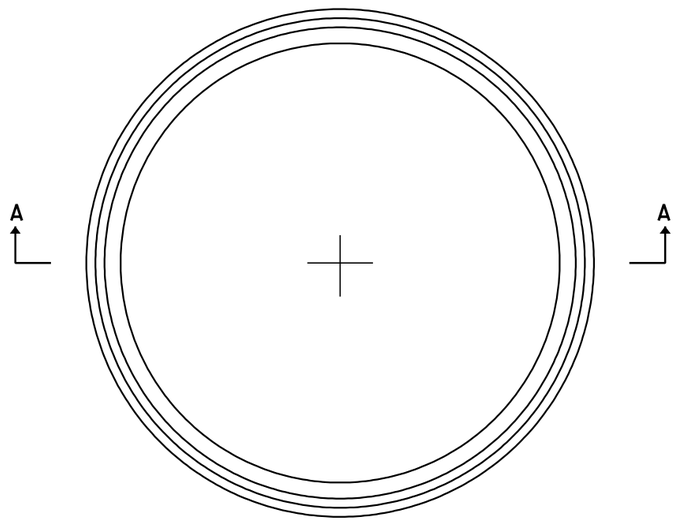

PLAN

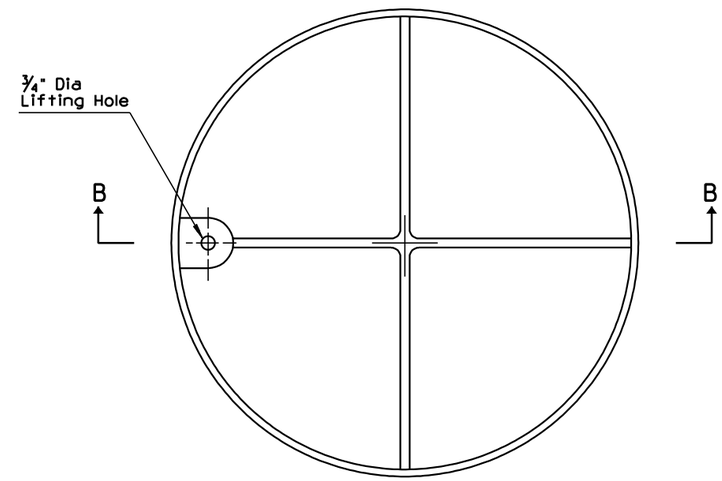

PLAN

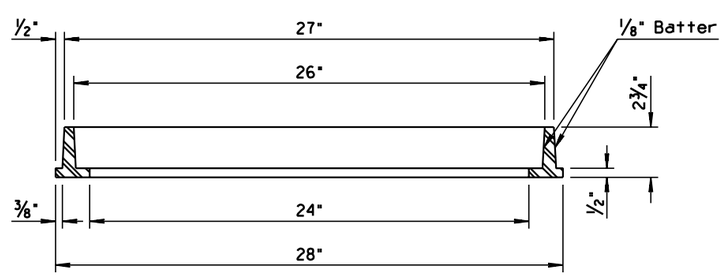

SECTION A-A

FRAME

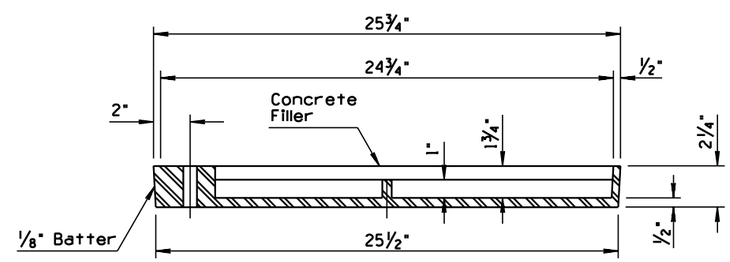

SECTION B-B

COVER

DESIGN APPROVED Terry H. Cottenus	STATE OF ARIZONA DEPARTMENT OF TRANSPORTATION DIVISION OF HIGHWAYS STANDARD DRAWINGS	ISSUE 5/97
APPROVED FOR DISTRIBUTION Ronald C. Williams	CATCH BASIN ACCESS FRAME AND COVER DETAILS	DRAWING NO. C-15.65

NO	DESCRIPTION OF REVISIONS	MADE BY	DATE
1	REVISED STD FOR NEW FRAME	PNB	5/97
2	ADDED DETAIL TO SHOW WIDE GUTTER	PNB	5/97
3	REVISED NOTE	PNB	5/97
4			

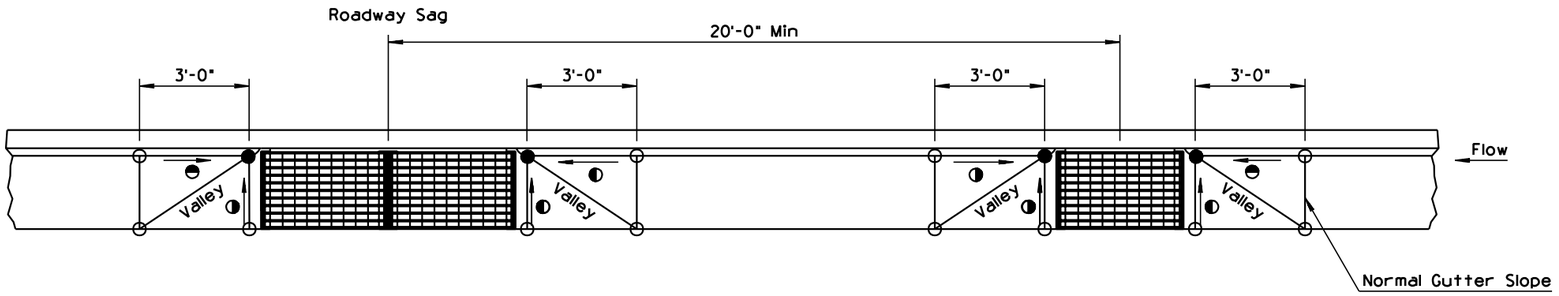

CATCH BASIN SPACING AT ROADWAY SAG CONDITION

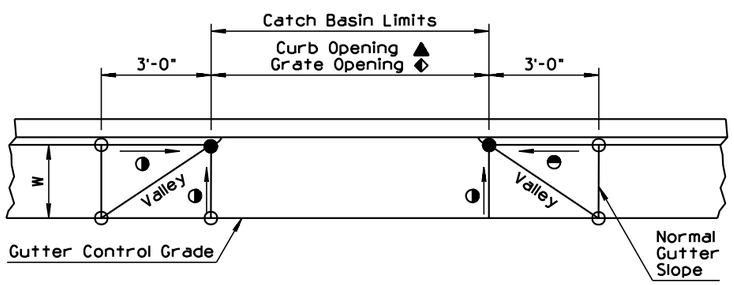

INLET DEPRESSION

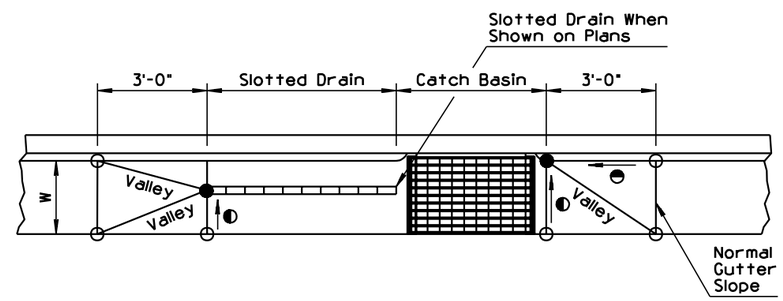

INLET DEPRESSION
CATCH BASIN WITH SLOTTED DRAIN

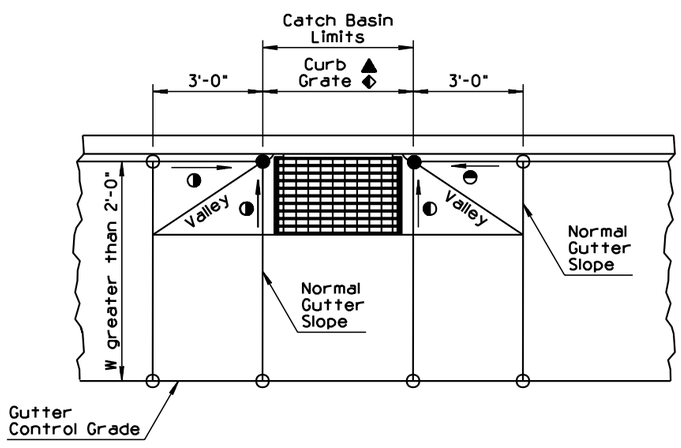

INLET DEPRESSION ②
CATCH BASIN WITH WIDE GUTTER

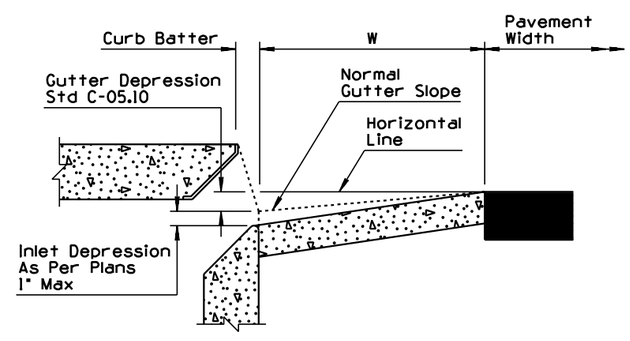

DETAIL NO. 1

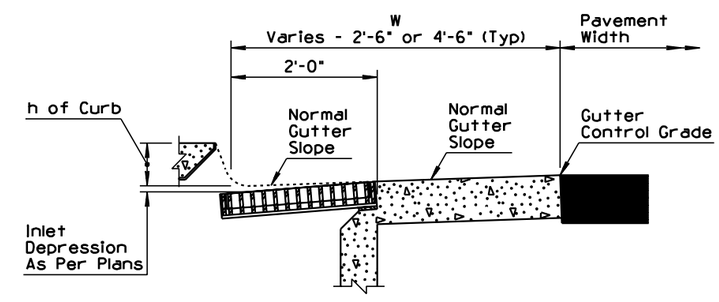

DETAIL NO. 2 ②

GENERAL NOTES

1. No inlet depression shall extend into a traffic lane.
2. Maximum combined inlet and gutter depression is 3 inches. See Detail No. 1.
3. Maximum distance along curb between catch basins where full gutter depression is used is 10 feet.
4. See Std. C-15.80 for aprons used with C-15.80 Catch Basin.
5. See Detail No. 2 for grate type catch basins with wide gutter.

LEGEND

- ○ - Normal pavement or gutter flow line elevation.
- ● - Depressed elevation.
- ⊖ - Straight grade with downward slope.
- W - Normal gutter width per Std. C-05.10.
- ▲ - Types 1, 3, & 5.
- ◆ - Type 4 & C-15.91.

DESIGN APPROVED Henry H. Otteman	STATE OF ARIZONA DEPARTMENT OF TRANSPORTATION DIVISION OF HIGHWAYS STANDARD DRAWINGS	REV. 5/97
APPROVED FOR DISTRIBUTION Ronald C. Williams	① CATCH BASIN MISC. DETAILS	DRAWING NO. C-15.70 Sheet 1 of 2

NO	DESCRIPTION OF REVISIONS	MADE BY	DATE
1			
2			
3			
4			

GENERAL NOTES

1. Construction drain may be deleted at the option of the Engineer.

LEGEND

O - Normal pavement or gutter flow line elevation.

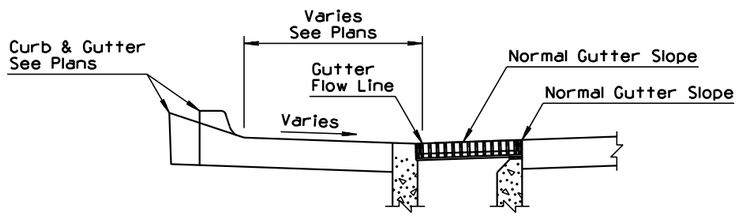

SECTION

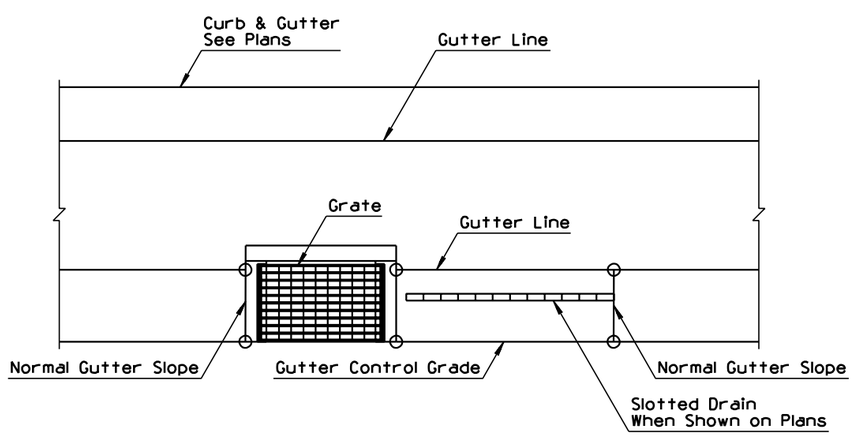

TYPE 4 CATCH BASIN WITHOUT CURB

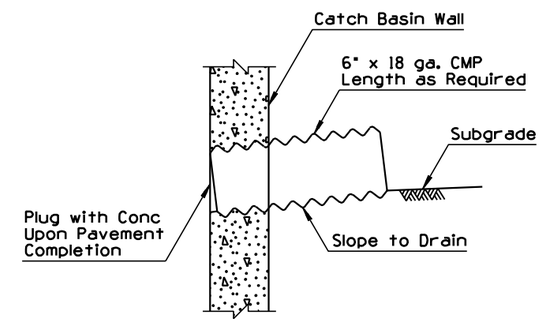

CATCH BASIN CONSTRUCTION DRAIN

DESIGN APPROVED Henry H. Otteness	STATE OF ARIZONA DEPARTMENT OF TRANSPORTATION DIVISION OF HIGHWAYS STANDARD DRAWINGS	ISSUE 5/97
APPROVED FOR DISTRIBUTION Ronald C. Williams	1 CATCH BASIN MISC. DETAILS	DRAWING NO. C-15.70 Sheet 2 of 2

NO	DESCRIPTION OF REVISIONS	MADE BY	DATE
1	MOVED DIMENSION FROM PLAN VIEW	PNB	10/95
2			
3			
4			

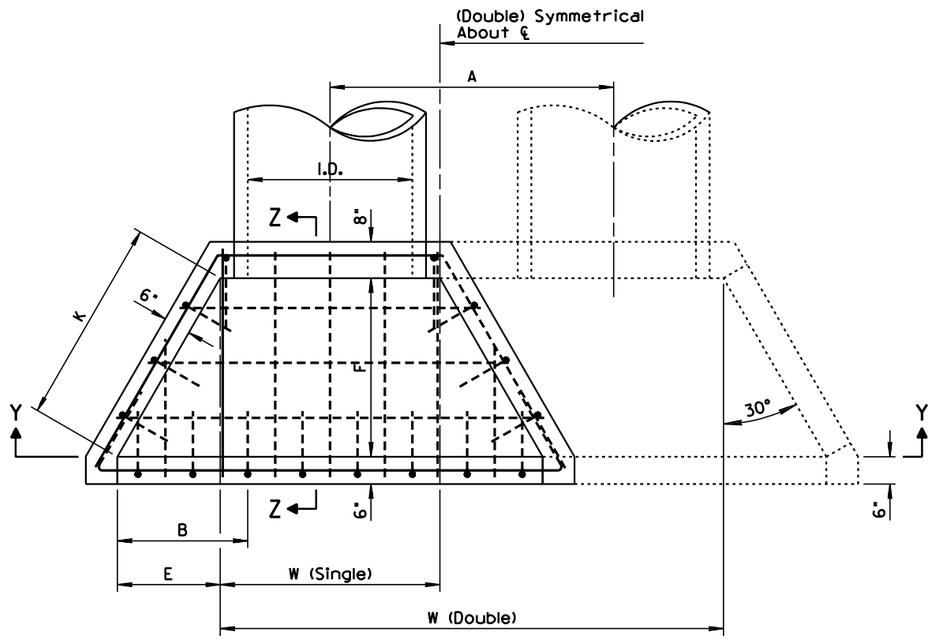

PLAN

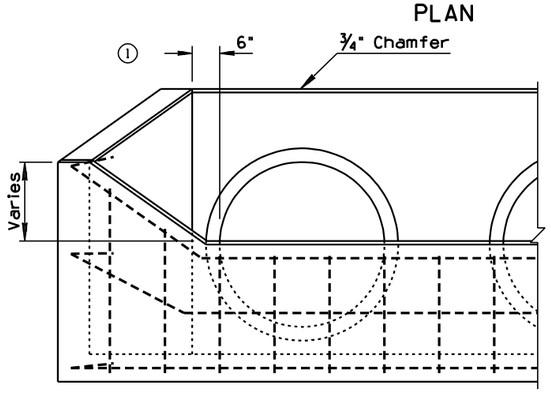

ELEVATION

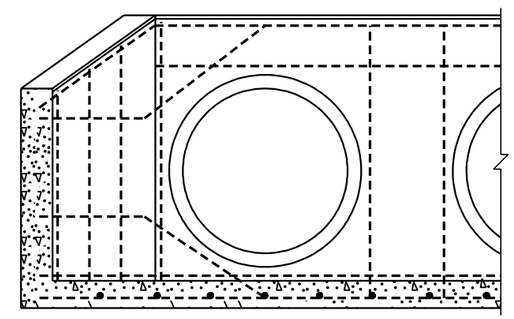

SECTION Y-Y

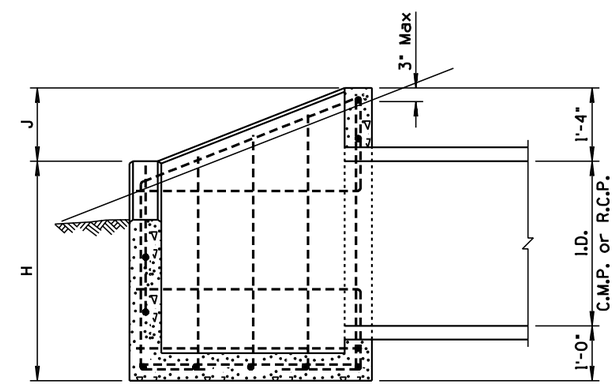

SECTION Z-Z

GENERAL NOTES

1. See also Std. C-13.10.
2. High point of headwall shall not project more than 3" above slope.
3. All concrete shall be Class B.
4. All reinforcing bars shall be Number 4, 1'-0" C to C and 3" clear to inside of walls and floor.

PIPE	DIMENSIONS									QUANTITIES					
										Concrete C.Y.				Reinforcing Steel	
	W									Single		Double		Lbs.	
I.D.	Single	Double	A	B	E	F	H	J	K	C.M.P.	For Concrete Pipe Deduct	C.M.P.	For Concrete Pipe Deduct	Single	Double
18"	2'-6"	5'-2"	2'-8"	1'-3"	9"	1'-3⅝"	3'-1"	9"	1'-6"	0.76	0.03	1.12	0.06	75	107
24"	3'-0"	6'-6"	3'-6"	1'-7½"	1'-1½"	1'-11⅜"	3'-5"	11"	2'-3"	1.00	0.04	1.55	0.09	92	136
30"	3'-6"	7'-10"	4'-4"	2'-0"	1'-6"	2'-7¼"	3'-9"	1'-1"	3'-0"	1.50	0.06	2.29	0.13	112	166
36"	4'-0"	9'-2"	5'-2"	2'-4½"	1'-10½"	3'-3"	4'-0"	1'-4"	3'-9"	1.96	0.09	3.01	0.17	145	214
42"	4'-6"	10'-6"	6'-0"	2'-9"	2'-3"	3'-10¾"	4'-4"	1'-6"	4'-6"	2.49	0.11	3.85	0.23	189	279

DESIGN APPROVED Terry H. Otterness	STATE OF ARIZONA DEPARTMENT OF TRANSPORTATION DIVISION OF HIGHWAYS STANDARD DRAWINGS	REV. 10/95
APPROVED FOR DISTRIBUTION Ronald C Williams	CATCH BASIN, DROP INLET	DRAWING NO. C-15.75

NO	DESCRIPTION OF REVISIONS	MADE BY	DATE
1	CHANGED APRON TO PORTLAND CEMENT CONCRETE ONLY	PNB	5/97
2	REVISED SLOPE	PNB	5/97
3	REVISED NOTE	RLF	7/01
4			

GENERAL NOTES

1. Apron shall be portland cement concrete. ①
2. All concrete shall be Class B.
3. Grating shall be fabricated of structural steel.
4. Structural steel shall be in accordance with ASTM A36.
5. All welding shall be in accordance with Standard Specification 604-3.06. ③
6. Grating assembly shall be given one shop coat of No. 1 paint.
7. 'H' indicated on plans.

* 8" When Wall Height Exceeds 8'

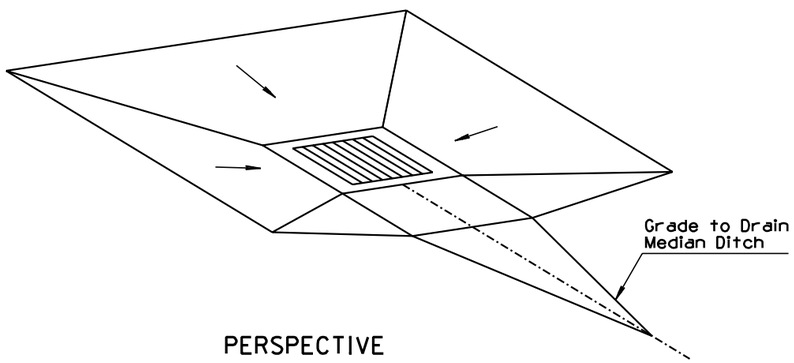

PERSPECTIVE

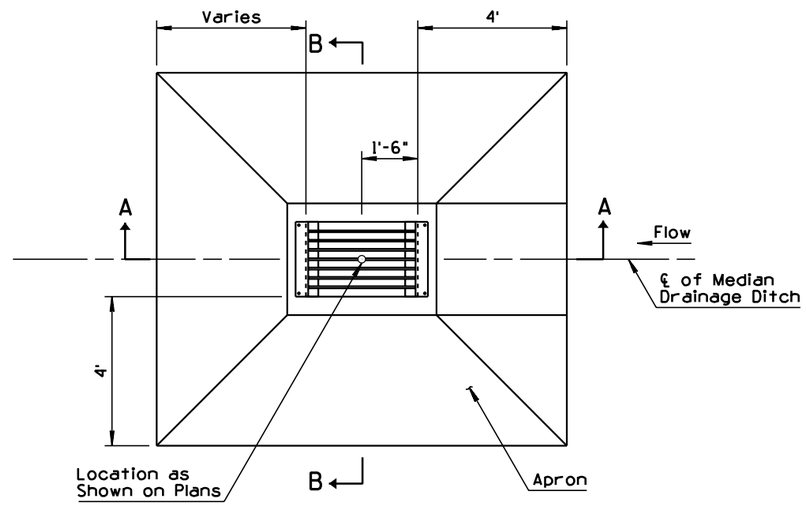

PLAN

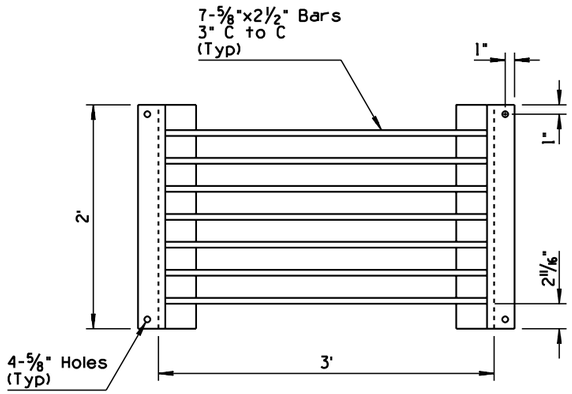

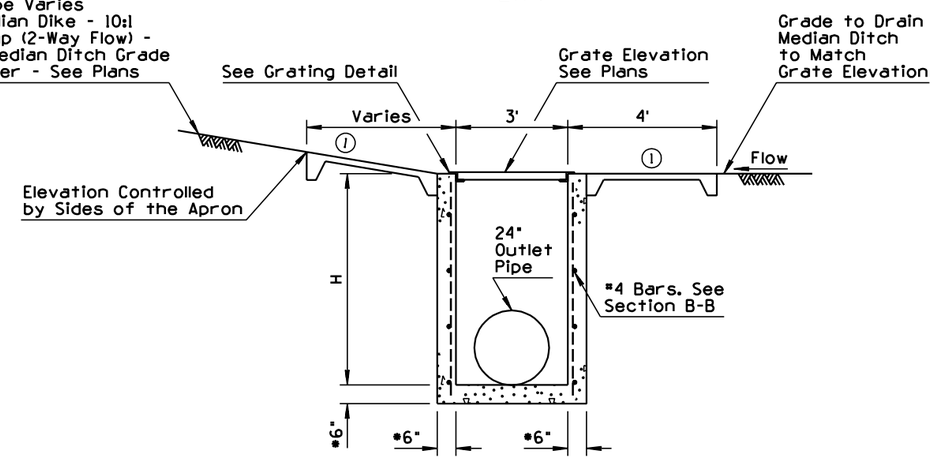

SECTION A-A

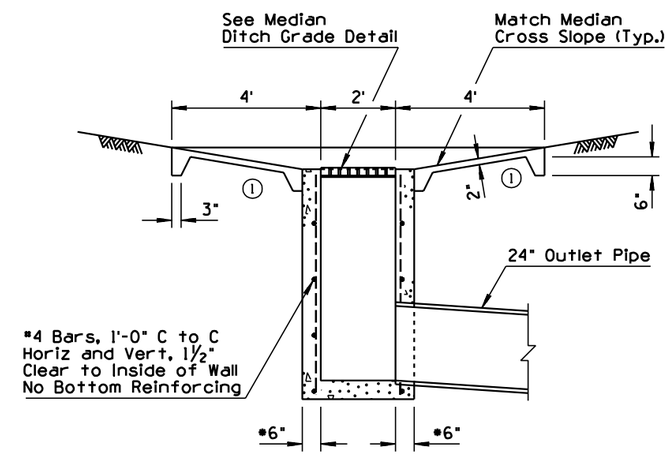

SECTION B-B

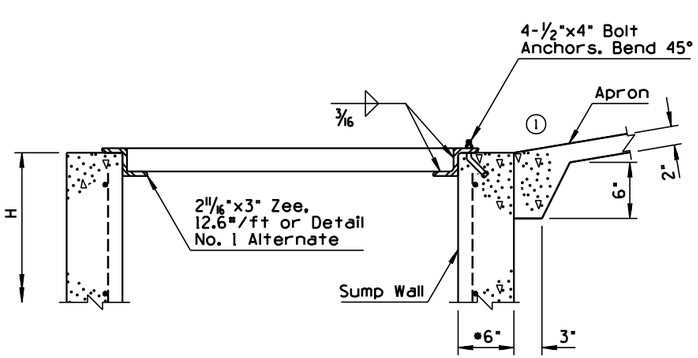

GRATING DETAIL

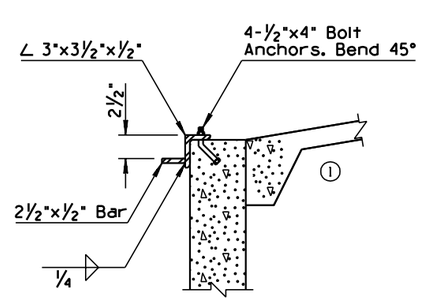

DETAIL NO. 1

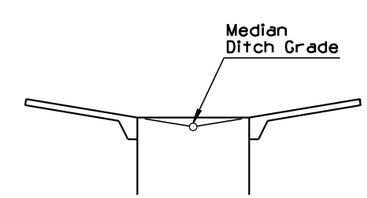

MEDIAN DITCH GRADE DETAIL

DESIGN APPROVED	STATE OF ARIZONA DEPARTMENT OF TRANSPORTATION DIVISION OF HIGHWAYS STANDARD DRAWINGS	REV. 7/01
APPROVED FOR DISTRIBUTION	CATCH BASIN, MEDIAN FLUSH	DRAWING NO. C-15.80

NO	DESCRIPTION OF REVISIONS	MADE BY	DATE
1	CHANGED APRON TO PORTLAND CEMENT CONCRETE ONLY	PNB	5/97
2	REVISED SLOPE	PNB	5/97
3	REVISED NOTE	RLF	7/01
4			

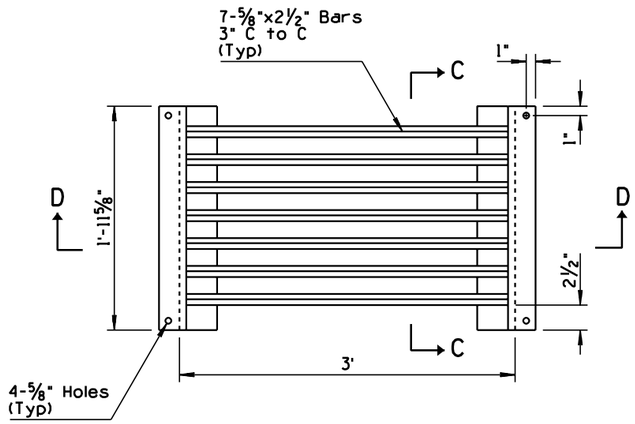

GRATING DETAIL

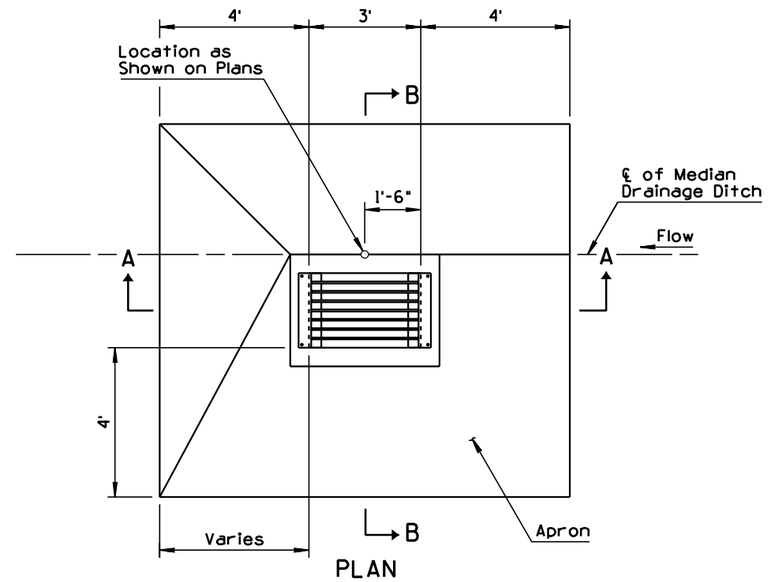

PLAN

GENERAL NOTES

(1) 1. Apron shall be portland cement concrete, Class B.

2. All concrete shall be Class B.

3. Grating shall be fabricated of structural steel.

4. Structural steel shall be in accordance with ASTM A36.

(3) 5. All welding shall be in accordance with Standard Specification 604-3.06.

6. Grating assembly shall be given one shop coat of No. 1 paint.

7. 'H' indicated on plans.

* 8" When Wall Height Exceeds 8'

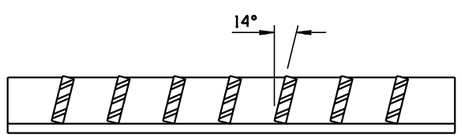

SECTION C-C

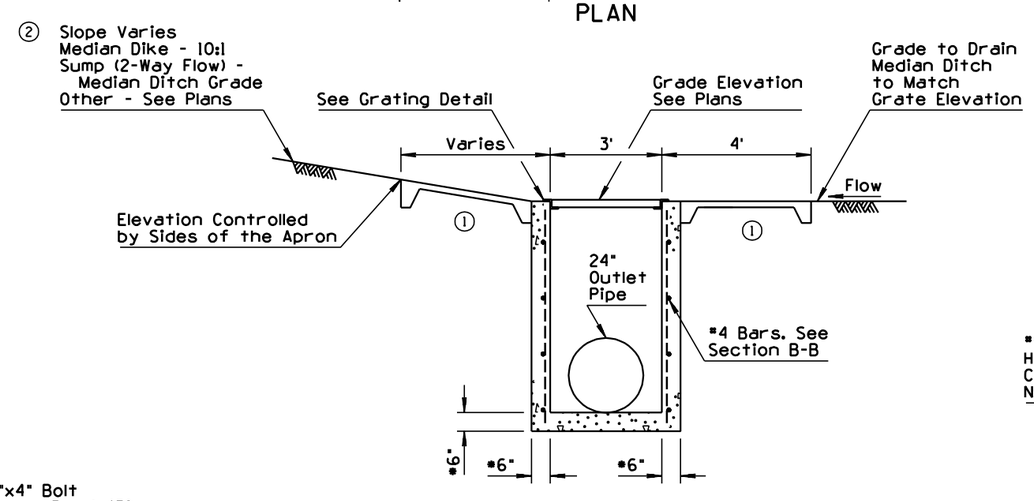

SECTION A-A

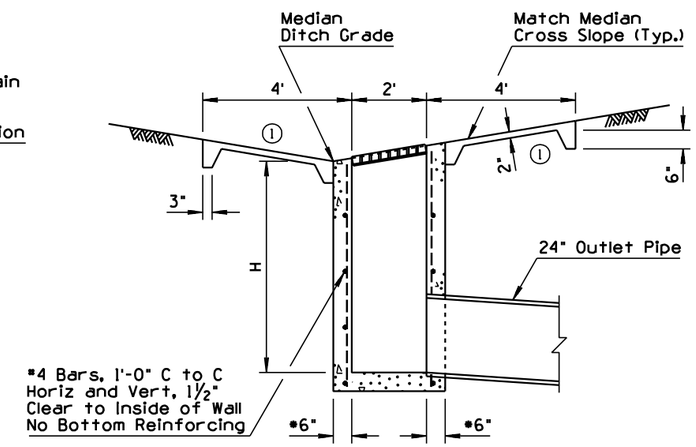

SECTION B-B

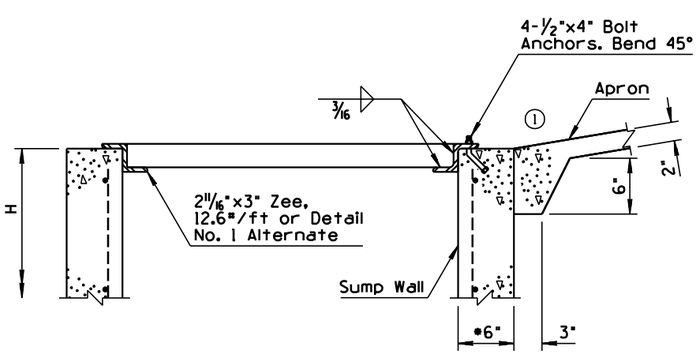

SECTION D-D

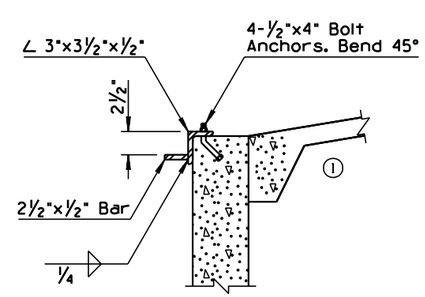

DETAIL NO. 1

DIMENSION TABLE	
Slope	A
6:1	0.50'
4:1	0.75'
3:1	1.00'
2:1	1.50'

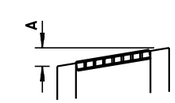

WALL HEIGHT DETAIL

DESIGN APPROVED	STATE OF ARIZONA DEPARTMENT OF TRANSPORTATION DIVISION OF HIGHWAYS STANDARD DRAWINGS	REV. 7/01
APPROVED FOR DISTRIBUTION	CATCH BASIN, MEDIAN SIDE SLOPE	DRAWING NO. C-15.81

NO	DESCRIPTION OF REVISIONS	MADE BY	DATE
1	REVISED GENERAL NOTE	PNB	10/95
2	REVISED GENERAL NOTE	RLF	7/01
3	ADDED CALLOUT	RLF	7/01
4			

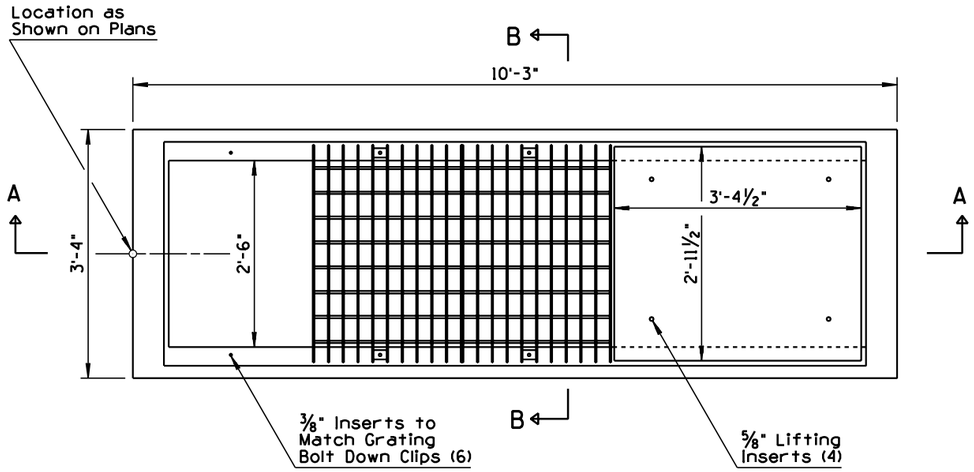

PLAN

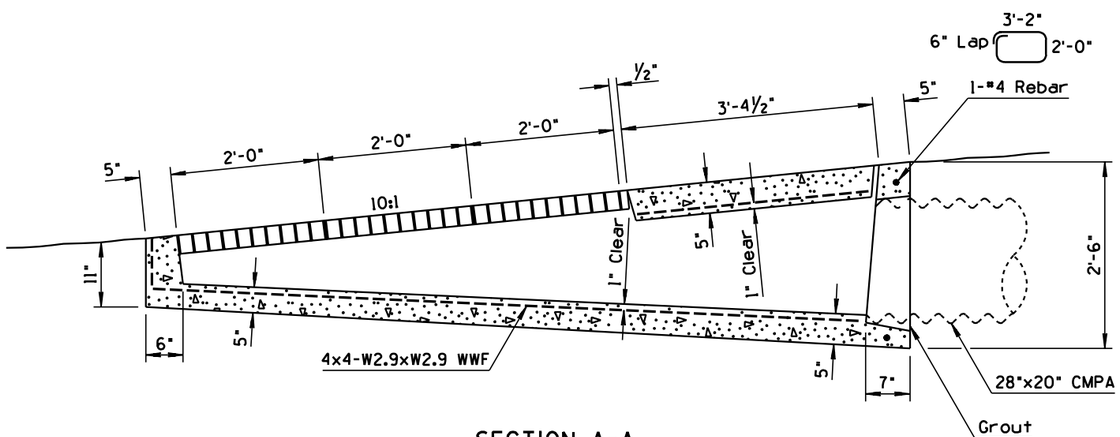

SECTION A-A

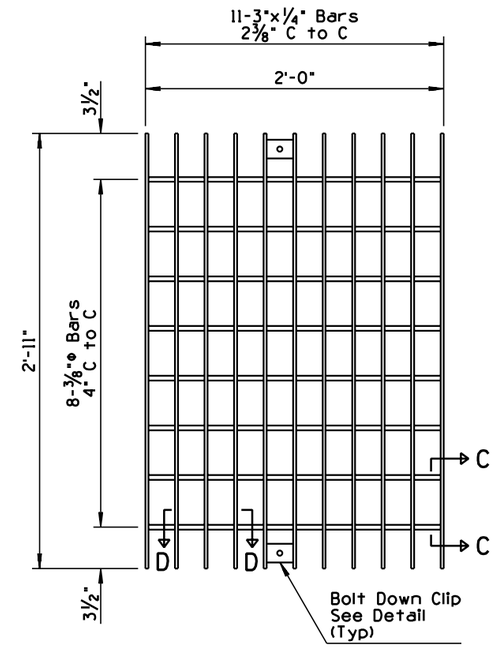

PLAN

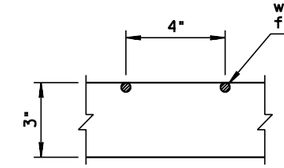

⅜" diameter cross bars may be fillet welded, resistance welded, or electro-forged to bearing bars. ③

SECTION C-C

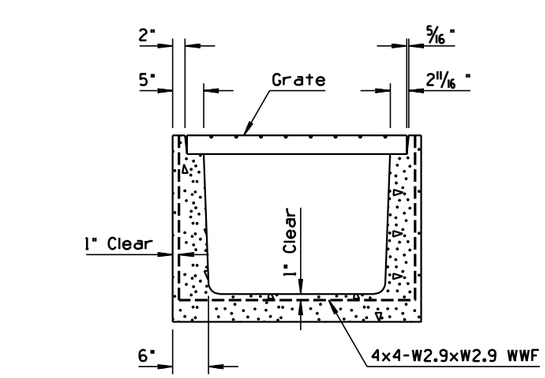

SECTION B-B

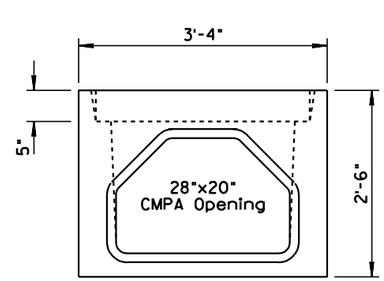

END VIEW

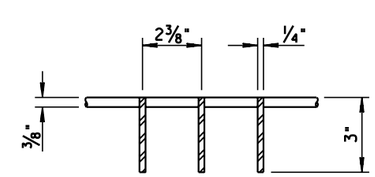

SECTION D-D

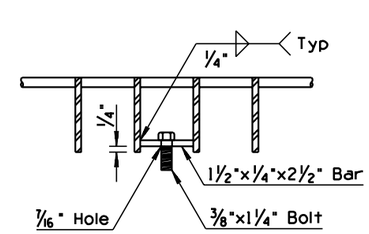

BOLT DOWN CLIP DETAIL

GENERAL NOTES

1. Concrete shall conform to the requirements for Class S Concrete. The minimum strength shall be 4000 psi.
2. Grout shall be in accordance with Standard Specifications except water content shall be such that the consistancy is proper for smooth trowling.
3. ② All welding shall be in accordance with Standard Specification 604-3.06.
4. The completed grate shall be given one shop coat of No. 1 paint.
5. ① Foundation soil and backfill shall be in accordance with Section 203-5 of the Standard Specifications.

DESIGN APPROVED	STATE OF ARIZONA DEPARTMENT OF TRANSPORTATION DIVISION OF HIGHWAYS STANDARD DRAWINGS	REV. 7/01
APPROVED FOR DISTRIBUTION	CATCH BASIN, MEDIAN DIKE PRECAST	DRAWING NO. C-15.90

NO	DESCRIPTION OF REVISIONS	MADE BY	DATE
1	REVISED TYPE C GUTTER DEPRESSION TO 1⅝"	JNP	8/99
2	DELETED PREVIOUS GENERAL NOTE* 2	RLF	7/01
3			
4			

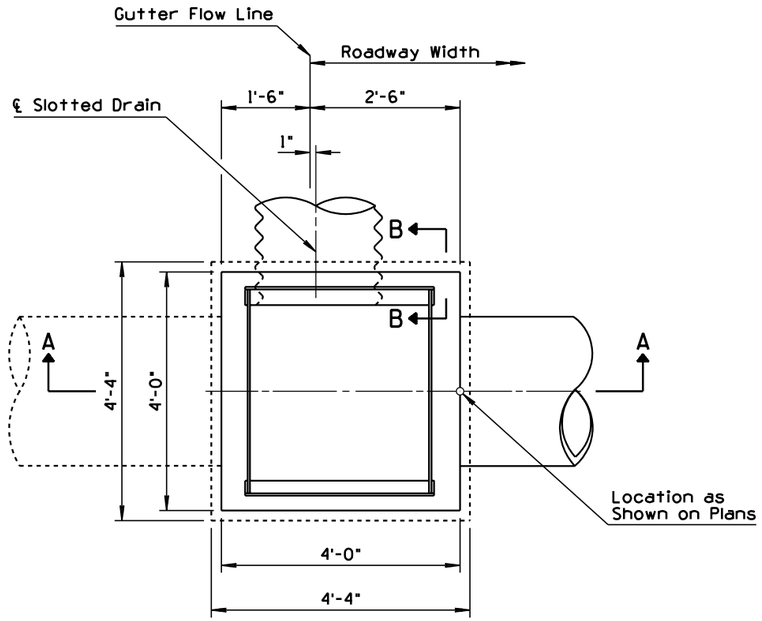

PLAN

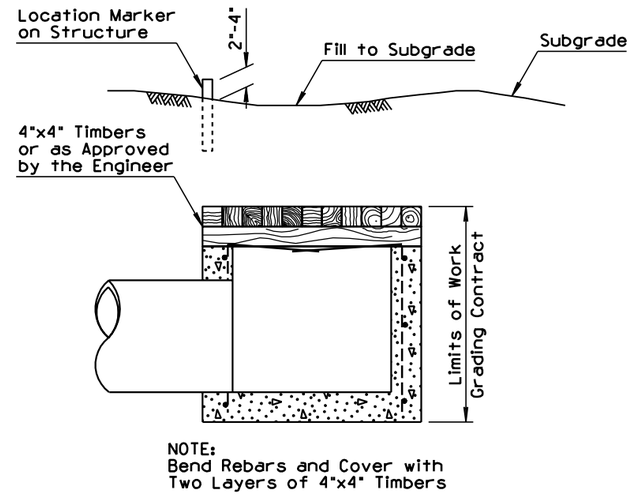

TEMPORARY TIMBER CAP DETAIL

GENERAL NOTES

1. All concrete shall be Class B.
2. ② All reinforcing steel shall have 2" min clear cover unless otherwise noted.
3. Reinforcing steel shall be No. 4 rebar, 12" C to C horizontal & vertical in walls.
4. Pipe can be placed in any wall.
5. See Std C-13.60 and C-13.65 for more information and dimensions of slotted drains.
6. *t = 6" when H is less than 8'.
   = 8" when H is greater than 8'

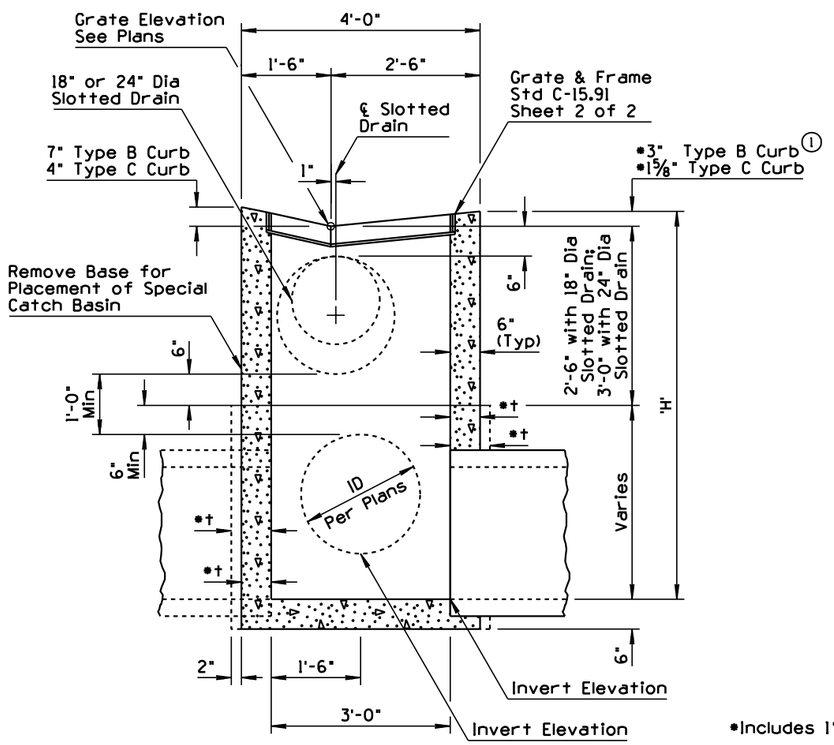

*Includes 1" Inlet Depression

SECTION A-A

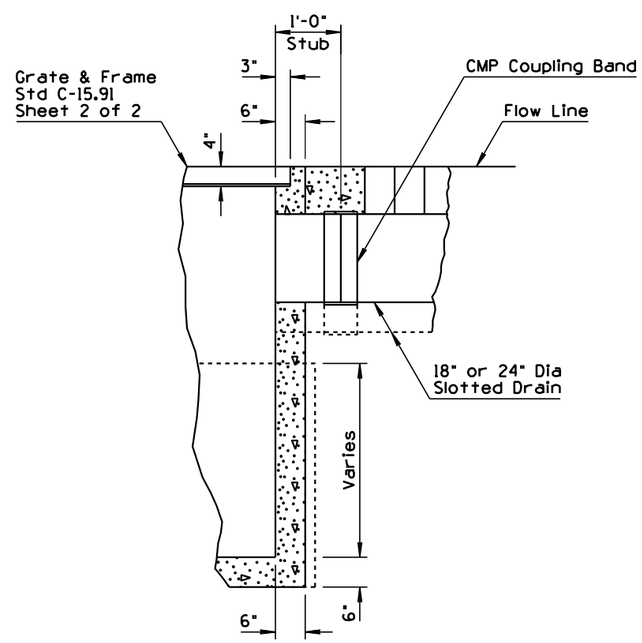

SECTION B-B

DESIGN APPROVED	STATE OF ARIZONA DEPARTMENT OF TRANSPORTATION DIVISION OF HIGHWAYS STANDARD DRAWINGS	REV. 7/01
APPROVED FOR DISTRIBUTION	FREEWAY CATCH BASIN DETAILS	DRAWING NO. C-15.91 Sheet 1 of 2

NO	DESCRIPTION OF REVISIONS	MADE BY	DATE
1	REVISED TYPE C FRAME & GRATE FOR 1 5/8" GUTTER DEPRESSION	JNP	8/99
2	REVISED NOTE	RLF	7/01
3	DELETED ORIGINAL GENERAL NOTE #5	RLF	7/01
4			

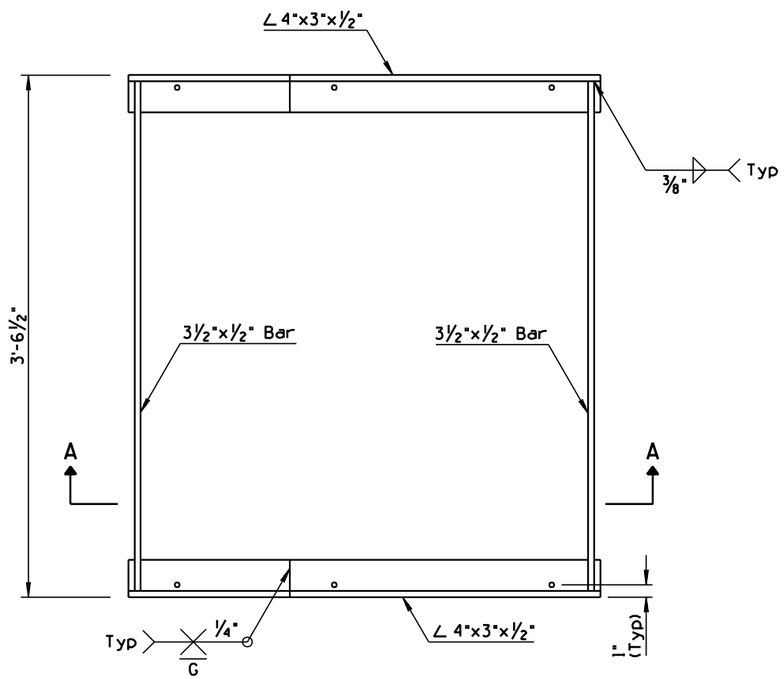

PLAN VIEW
FRAME

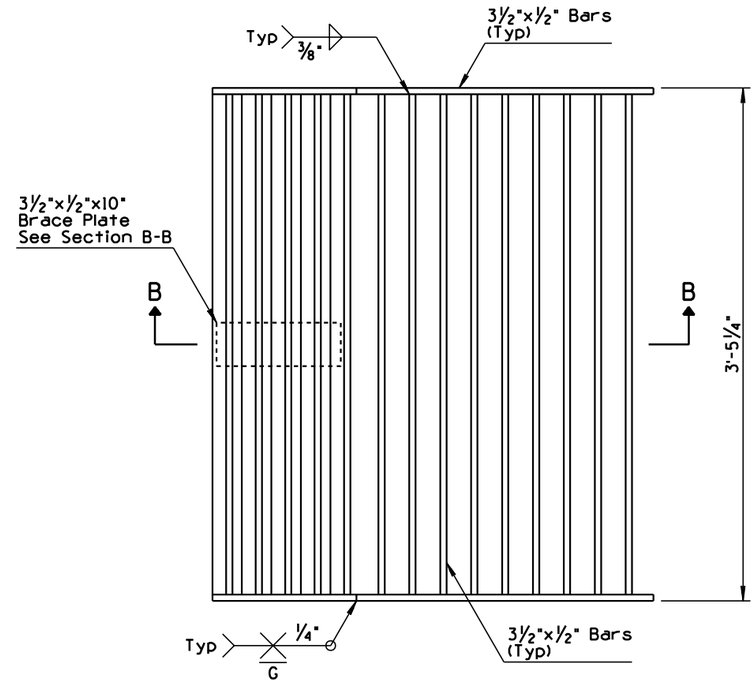

PLAN VIEW
GRATE

GENERAL NOTES

1. All structural steel shall be in accordance with ASTM Spec's A-36.
2. Grate design is not suitable for locations subject to bicycle traffic.
2. ② All welding shall be in accordance with Standard Specification 604-3.06.
4. The completed grate assembly (frame & grate) shall be given two shop coats of No. 1 paint.

3. ③

GRATE AND FRAME DIMENSIONS						
			Catch Basin Frame		Catch Basin Grate	
Type	Curb Height	Gutter Width	A	∢	C	∢
B	6"	2'-6"	13 15/16"	26°-57'-40"	12 1/16"	26°-57'-40"
① C	3"	2'-6"	13 5/16"	15°-37'-45"	11 7/8"	15°-37'-45"

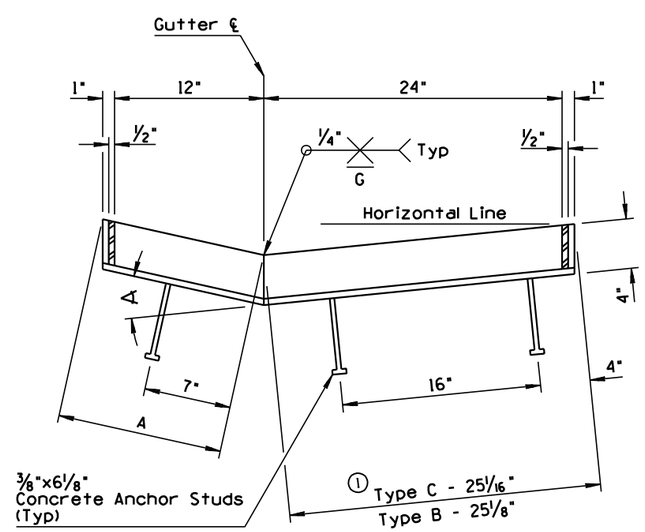

SECTION A-A

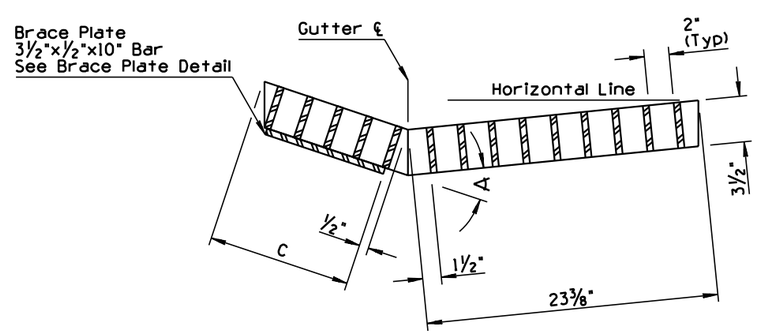

SECTION B-B

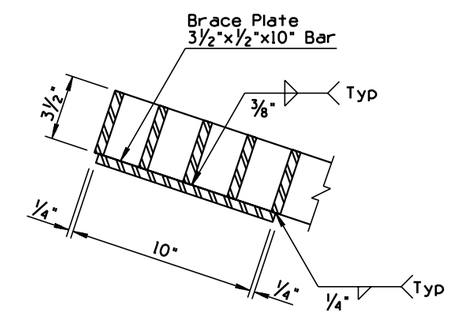

BRACE PLATE DETAIL

DESIGN APPROVED	STATE OF ARIZONA DEPARTMENT OF TRANSPORTATION DIVISION OF HIGHWAYS STANDARD DRAWINGS	REV. 7/01
APPROVED FOR DISTRIBUTION	FREEWAY CATCH BASIN DETAILS	DRAWING NO. C-15.91 Sheet 2 of 2

NO	DESCRIPTION OF REVISIONS	MADE BY	DATE
1	REVISED FRAME TO ACCEPT C-15.50 GRATE (BICYCLE TRAFFIC)	RT/RLF	7/01
2	REVISED NOTE	RT/RLF	7/01
3	ADDED GENERAL NOTE 8	RT/RLF	7/01
4	REVISED DIMENSIONS	RT	11/02

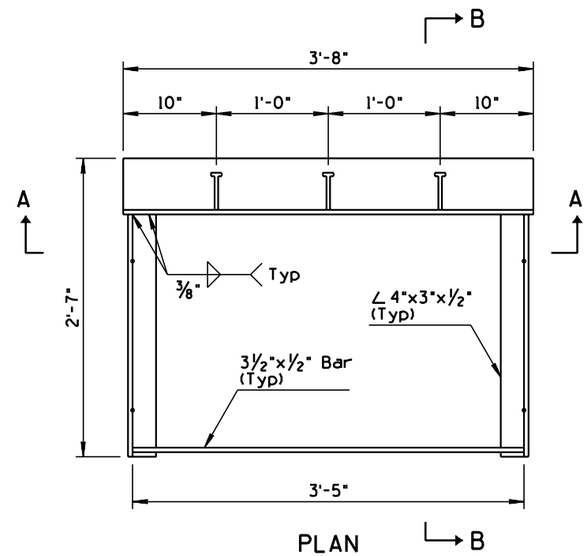

PLAN

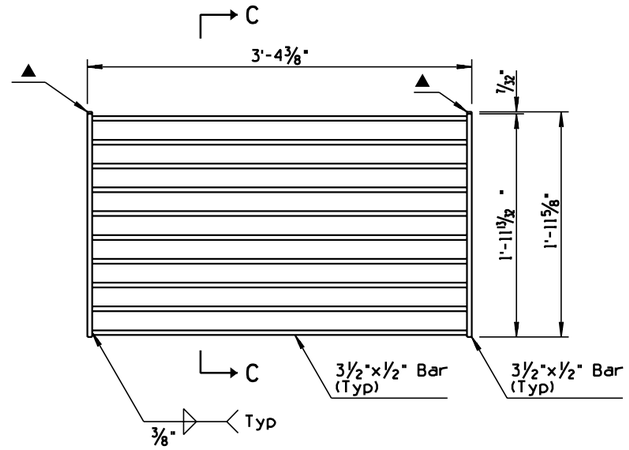

PLAN

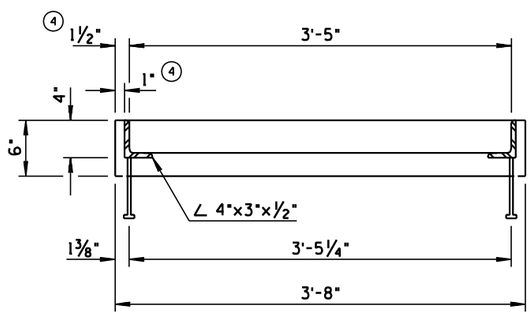

SECTION A-A

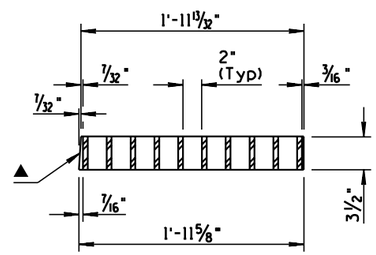

SECTION C-C

GRATE

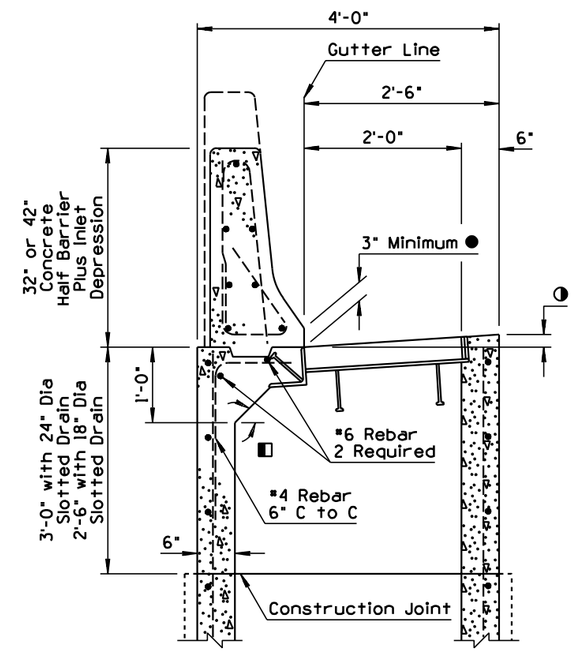

CATCH BASIN WITH HALF BARRIER

GENERAL NOTES

1. See Std C-15.91 for dimensions, sizes and details not shown for installation of catch basin.
2. See Std C-10.62 and C-10.63 for dimensions, sizes and details not shown for installation of barrier.
3. See Std C-13.60 for dimensions, sizes and details not shown for installation of slotted drain.
4. Unless otherwise noted, reinforcement steel in half barrier for installation with catch basin and slotted drain, shall conform to sizes and number specified.
5. (2) All welding shall be in accordance with Standard Specification 604-3.06.
6. Where applicable, see Std C-10.60 for weep hole placement.
7. Grate design shown is not suitable for locations subject to bicycle traffic. Use C-15.50 grate with C-15.92 frame for locations with bicycle traffic.
8. (3) Grate opening for grate shown is 4.75 Sq. Ft.

* for 18" Diameter Slotted Drain
** for 24" Diameter Slotted Drain

◧ Angle Varies Approx. 45°

▲ Beveled Side of Grate Toward Barrier

● Varies in increased height over catch basin and slotted drain inlet depression.

◑ Match adjacent gutter depression. Additional inlet depression as specified.

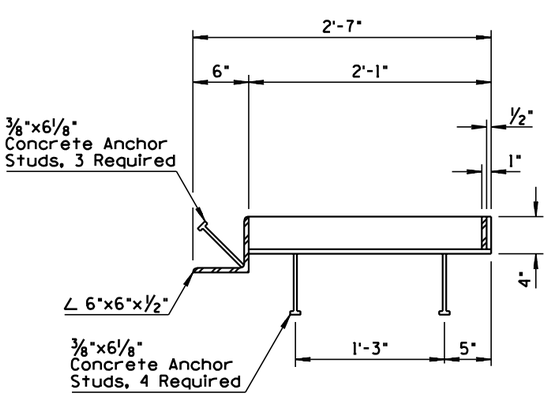

SECTION B-B

FRAME

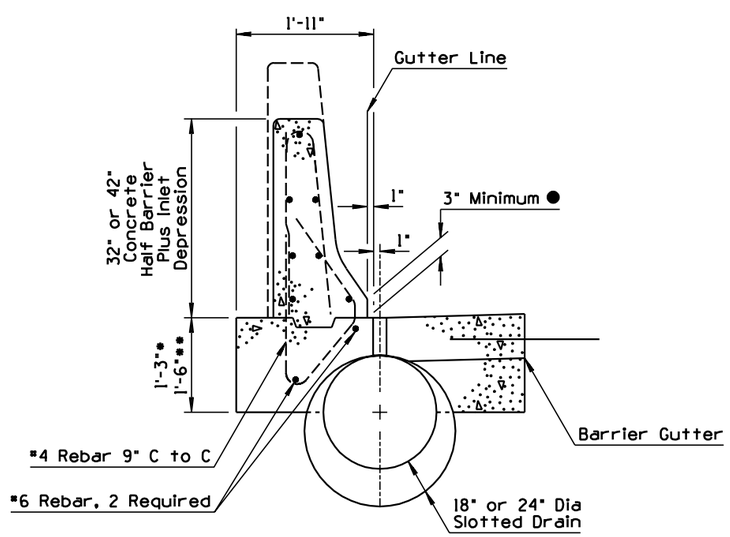

HALF BARRIER INSTALLATION
AT SLOTTED DRAIN LOCATIONS

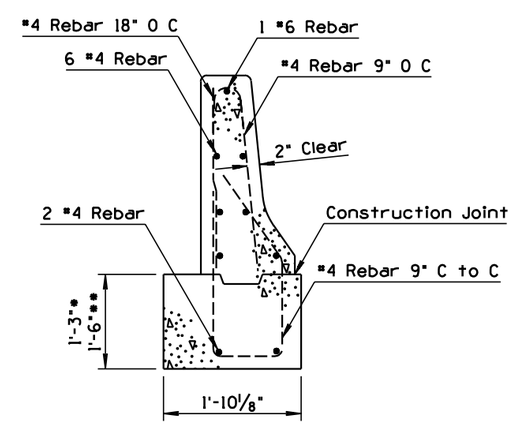

REINFORCING DETAIL

DESIGN APPROVED	STATE OF ARIZONA DEPARTMENT OF TRANSPORTATION DIVISION OF HIGHWAYS STANDARD DRAWINGS	REV. 7/01
APPROVED FOR DISTRIBUTION	CATCH BASIN WITH CONCRETE (1) HALF BARRIER TYPE 'F'	DRAWING NO. C-15.92

NO	DESCRIPTION OF REVISIONS	MADE BY	DATE
1	CHANGED "DIVISIONS" TO "SECTIONS"	PNB	10/95
2			
3			
4			

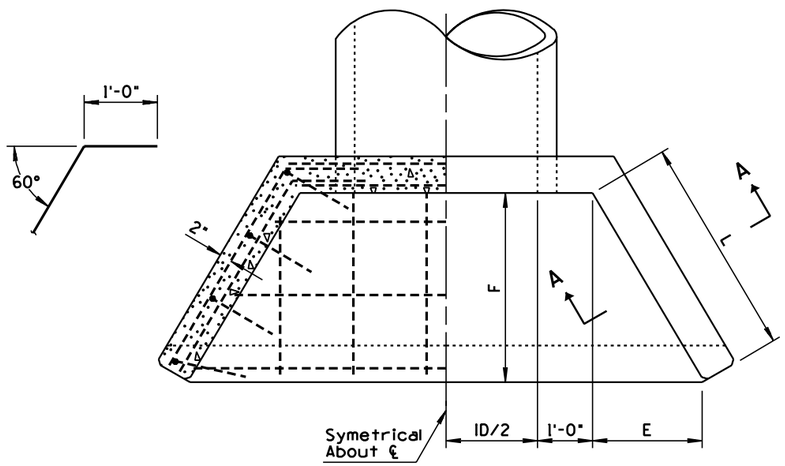

PLAN

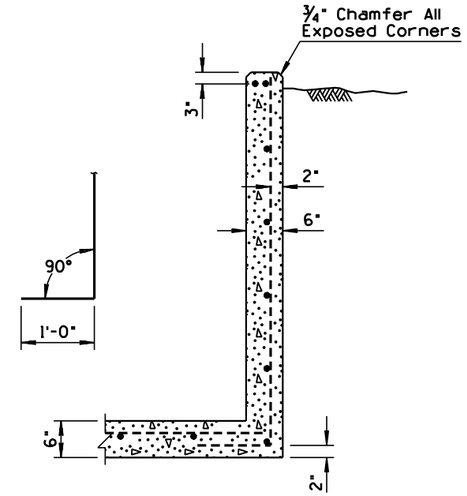

SECTION A-A

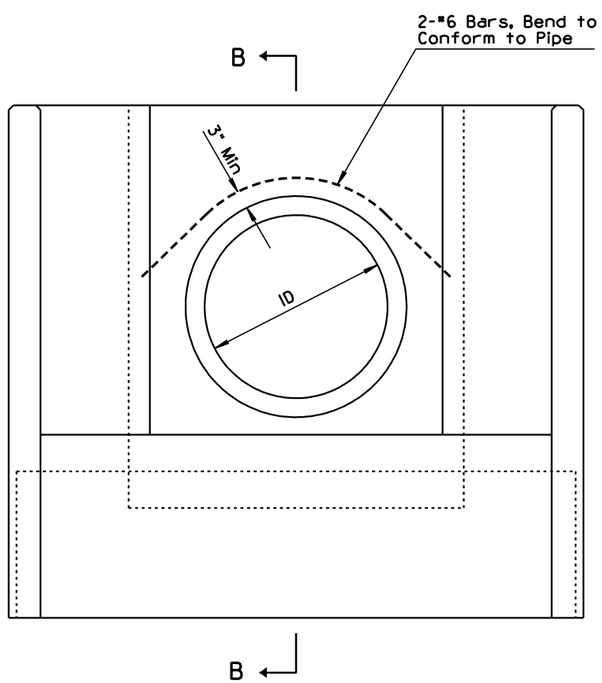

ELEVATION

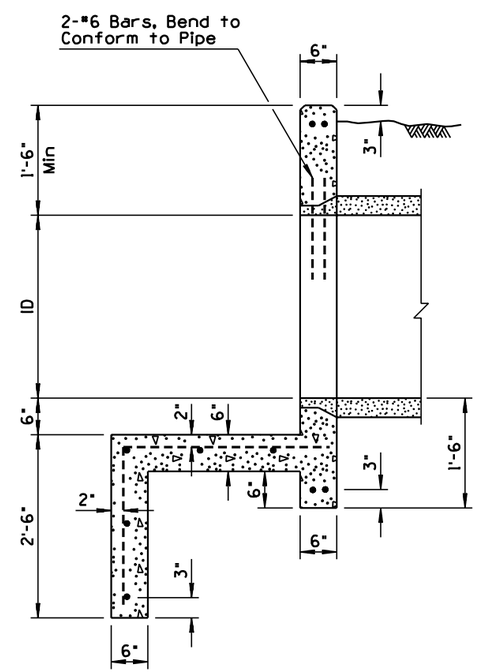

SECTION B-B

GENERAL NOTES

1. All concrete shall be Class B.
2. All reinforcing bars shall be #4 except two #6 bars over pipe. Bar spacing approximately 1'-0" center to center unless otherwise noted.
3. (1) 30° wing wall flare shown; 45° normally desirable. See Hydraulics and Utility and Railroad Engineering Sections.

PIPE	DIMENSIONS			QUANTITIES		
				CY Concrete		
ID	L	E	F (Approx)	CMP	RCP	Reinf Steel Lbs
18"	2'-0"	1'-0"	1'-9"	0.97	0.96	65
24"	2'-0"	1'-0"	1'-9"	1.11	1.07	78
30"	3'-0"	1'-6"	2'-7"	1.50	1.44	108
36"	4'-0"	2'-0"	3'-6"	2.08	2.01	150
42"	5'-0"	2'-6"	4'-4"	2.71	2.63	205
48"	6'-0"	3'-0"	5'-2"	3.39	3.30	270
54"	7'-0"	3'-6"	6'-1"	4.14	4.02	335
60"	8'-0"	4'-0"	6'-11"	4.96	4.80	410

DESIGN APPROVED
Terry H. Otterness

APPROVED FOR DISTRIBUTION
Ronald C. Williams

STATE OF ARIZONA
DEPARTMENT OF TRANSPORTATION
DIVISION OF HIGHWAYS
STANDARD DRAWINGS

REV. 10/95

IRRIGATION HEADWALLS
18" TO 60" DIAMETER PIPES

DRAWING NO. C-16.10

NO	DESCRIPTION OF REVISIONS	MADE BY	DATE
1	CHANGED "DIVISION" TO "SECTION"	PNB	10/95
2			
3			
4			

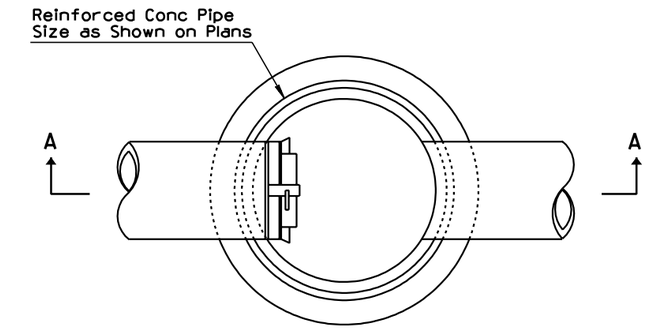

PLAN

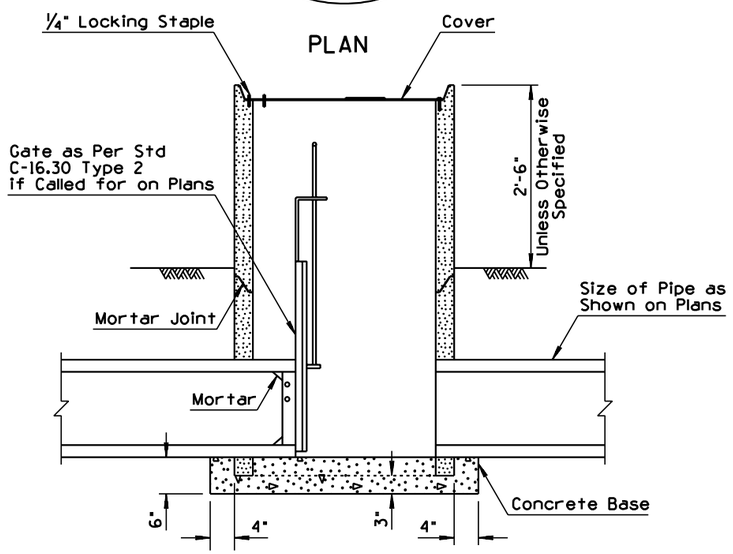

SECTION A-A

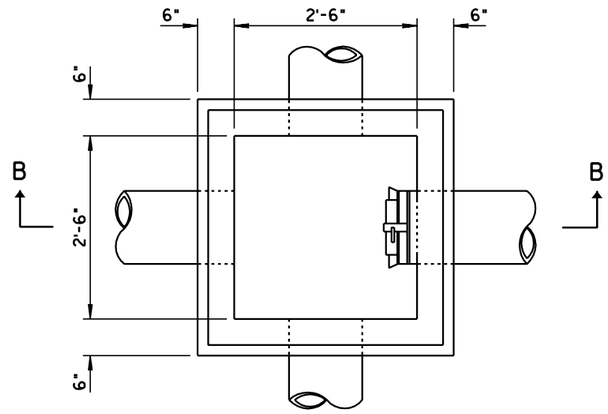

PLAN

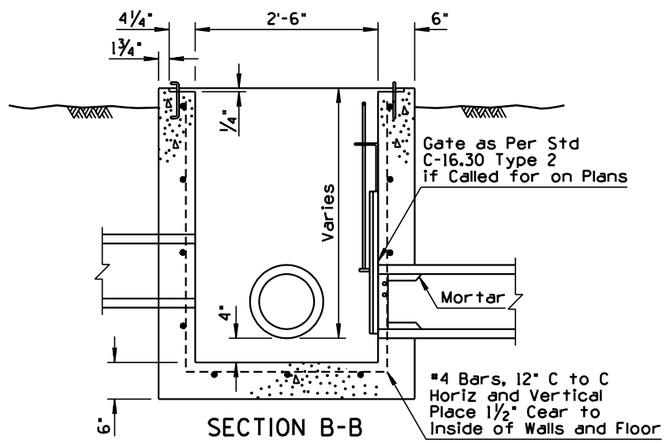

SECTION B-B

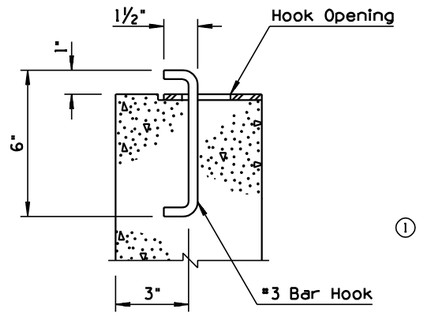

SECTION C-C

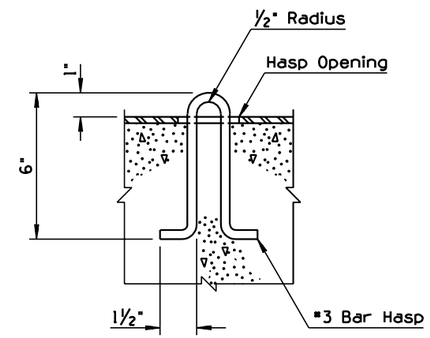

SECTION D-D

GENERAL NOTES

1. All concrete shall be Class B.
2. Structural steel shall be in acordance with ASTM A36.
3. All cover steel and exposed appurtenances shall be given one shop coat of No. 1 paint.
4. Plans shall specify locked or bolted cover for standpipe No. 2.
5. For specific details of a flush pavement or sidewalk installation, see Utility and Railroad Engineering Section. (1)

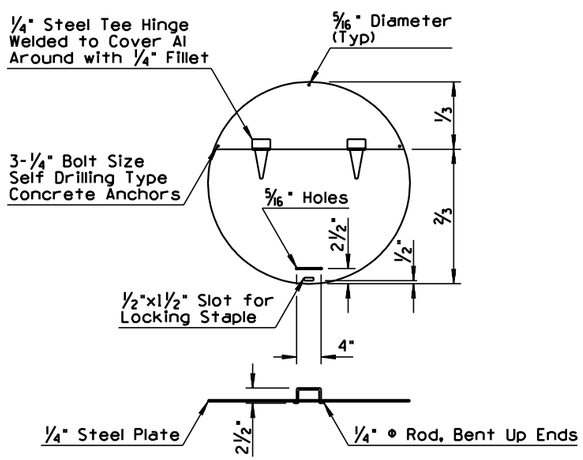

COVER
IRRIGATION STANDPIPE NO. 1

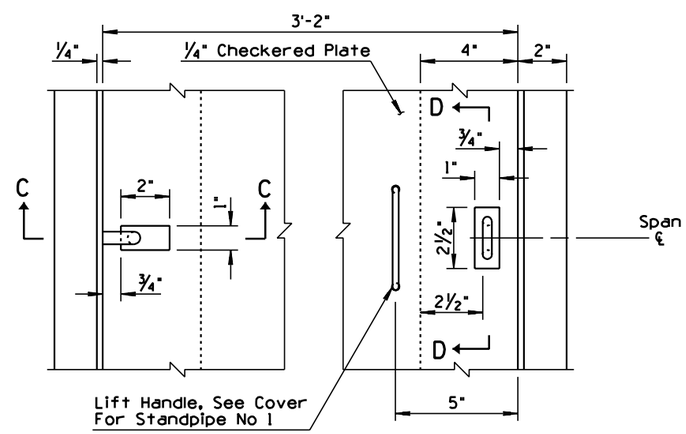

LOCKING COVER
IRRIGATION STANDPIPE NO. 2

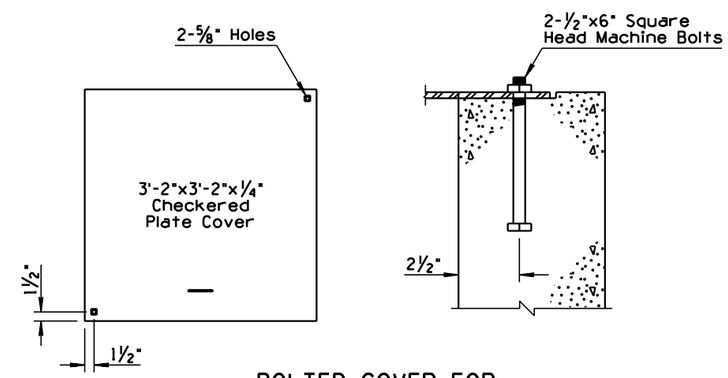

BOLTED COVER FOR
STANDPIPE NO. 2

DESIGN APPROVED	STATE OF ARIZONA DEPARTMENT OF TRANSPORTATION DIVISION OF HIGHWAYS STANDARD DRAWINGS	REV.
APPROVED FOR DISTRIBUTION	IRRIGATION STANDPIPES	DRAWING NO. C-16.20

NO	DESCRIPTION OF REVISIONS	MADE BY	DATE
1	REISSUE STD	PNB	7/94
2			
3			
4			

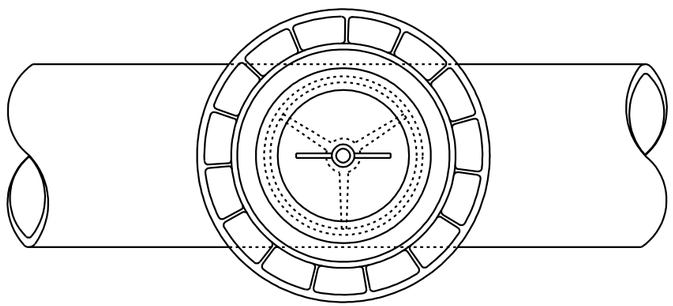

PLAN

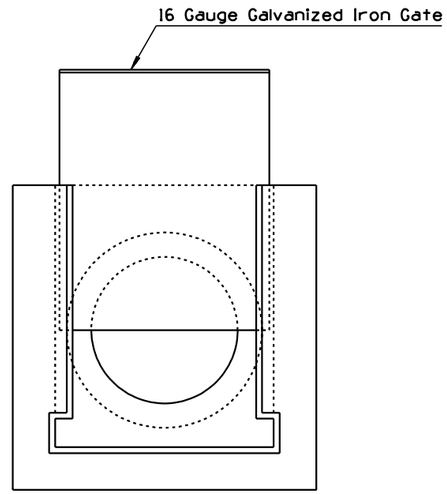

ELEVATION

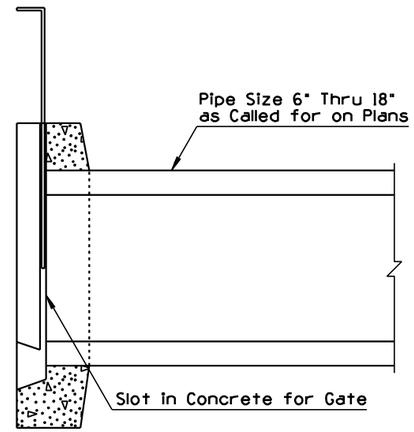

SECTION

PRECAST IRRIGATION GATE
For Open Ditch Installation
TYPE 1

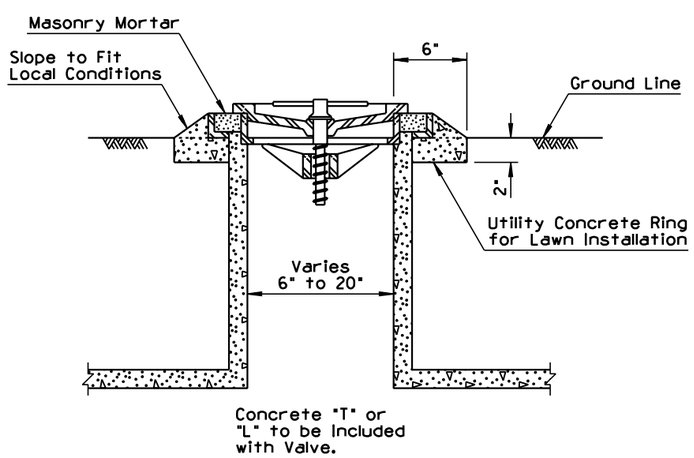

Irrigation Valve Number of Valve Shall Correspond to the Size of Pipe in Inches. No 6 to No 20.

PART SECTION
FLUSH IRRIGATION VALVE

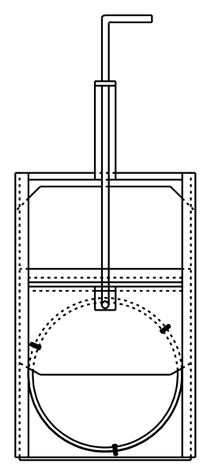

ELEVATION

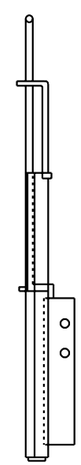

SECTION

IRRIGATION GATE
For Standpipe Installation
TYPE 2

TYPE 2 IRRIGATION GATE

For pipes 6" through 24". Gate and frame shall be galvanized iron. Type shown is for concrete pipe. For CMP, external steel adjustable bend shall be used in place of internal steel ring.

DESIGN APPROVED Terry H. Otterness	STATE OF ARIZONA DEPARTMENT OF TRANSPORTATION DIVISION OF HIGHWAYS STANDARD DRAWINGS	REV. 7/94
APPROVED FOR DISTRIBUTION Ronald C. Williams	1 IRRIGATION VALVE AND GATE	DRAWING NO. C-16.30

NO	DESCRIPTION OF REVISIONS	MADE BY	DATE
1	REARRANGED STD	PNB	7/94
2	ADDED NOTE	PNB	7/94
3			
4			

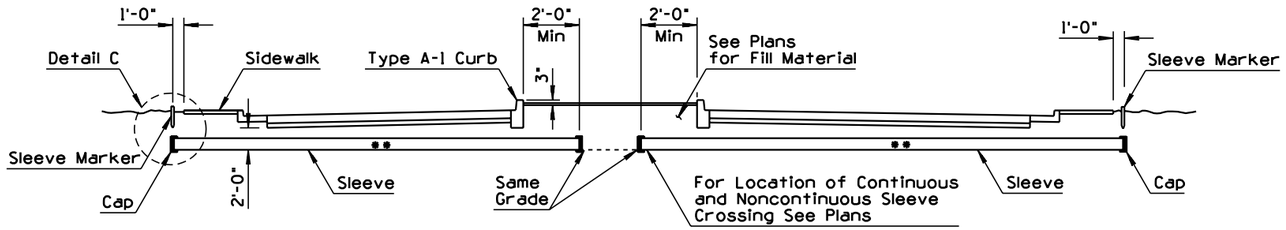

SLEEVE UNDER CROSSROAD

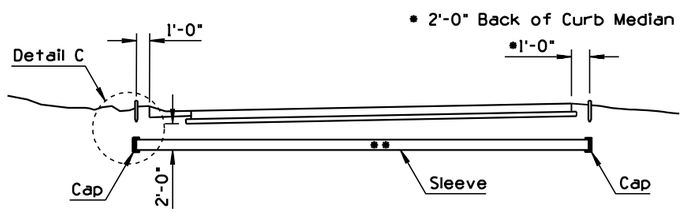

SLEEVE UNDER MAINLINE

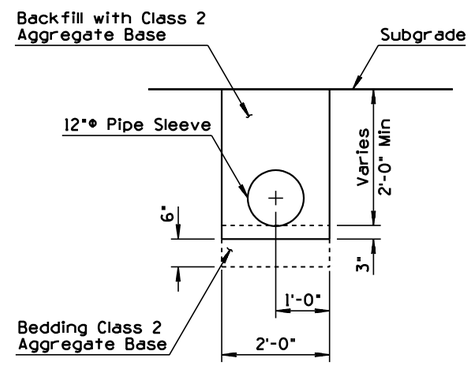

TYPICAL INSTALLATION

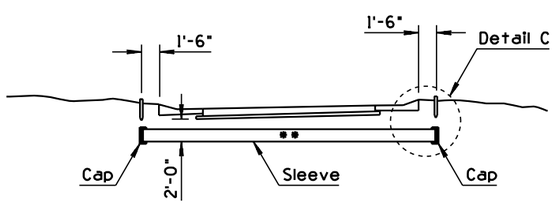

SLEEVE UNDER RAMP

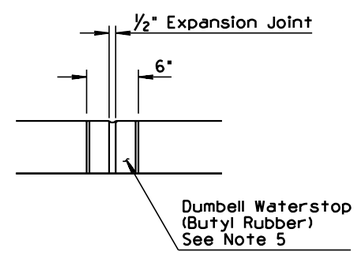

DUMBELL WATERSTOP

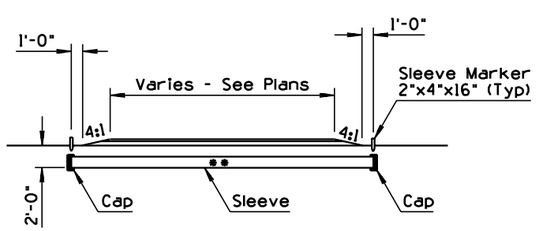

SLEEVE UNDER DRIVEWAYS AND PARKING AREAS

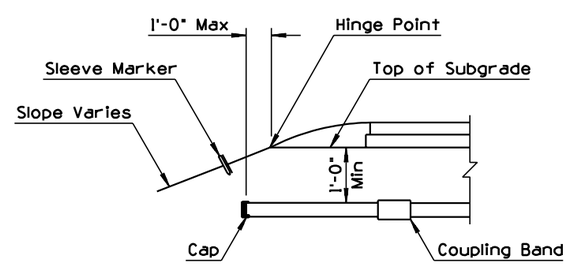

DETAIL C
SLEEVE TERMINATION
AT ELEVATED ROADWAY

GENERAL NOTES

1. Irrigation sleeves shall be installed in a trench condition. See Std C-13.15 and Std C-7.06.
2. Bedding and backfill material shall be Class 2 Aggregate Base.
3. Pipe installation shall conform to Section 501 of Standard Specifications.
4. The Contractor shall imprint a 4"± high letter "S" on the face of all curbs at sleeve locations. The width of the letter shall be ½" and shall penetrate the concrete surface ½".
5. For non-continuous sleeves under crossroads, Std C-5.10 Type "A-1" curb shall be required where median is irrigated. See plans for locations. Dumbell waterstop shall be at all expansion joints.
2. 6. Materials used for caps or plugs shall be as recommended by the pipe supplier and approved by the Engineer.

** Generally, sleeves shall be installed parallel to the roadway subgrade. Slope may vary in superelevated sections. Minimum slope nominal to drain.

DESIGN APPROVED Henry H. Otterness	STATE OF ARIZONA DEPARTMENT OF TRANSPORTATION DIVISION OF HIGHWAYS STANDARD DRAWINGS	REV. 7/94
APPROVED FOR DISTRIBUTION Ronald C. Williams	1 IRRIGATION SLEEVES	DRAWING NO. C-16.40

NO	DESCRIPTION OF REVISIONS	MADE BY	DATE
1	ADDED NOTE	PNB	7/94
2	MODIFIED TABLE	PNB	7/94
3			
4			

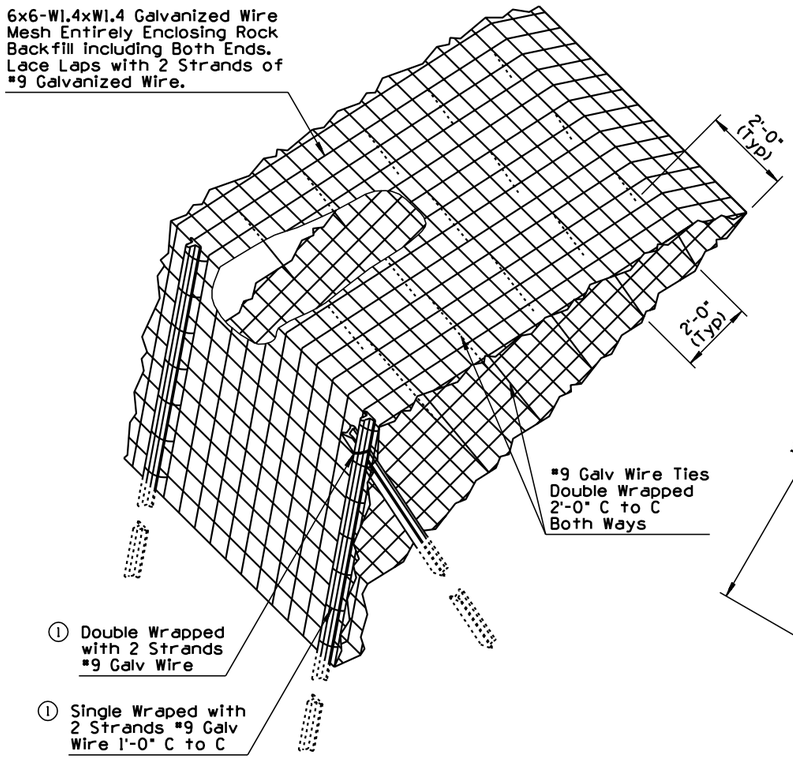

PERSPECTIVE

Drawn for types 1 and 2, Type 3 Similar

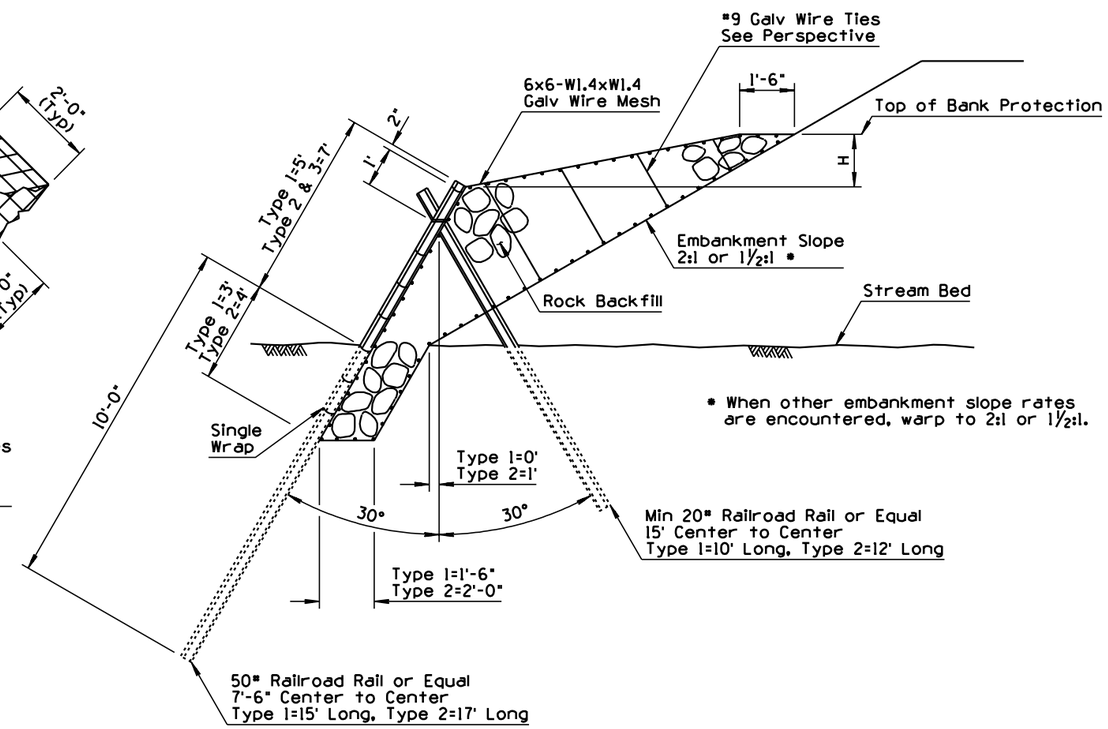

TYPE 1 AND 2 BANK PROTECTION

GENERAL NOTES

1. Rock shall be sound and durable, of rounded or angular shape and with a nominal diameter of 8" minimum and 12" maximum. Flat or needle shapes are not acceptable.
2. Wire mesh splice shall have a 6" minimum lap vertically and horizontally.

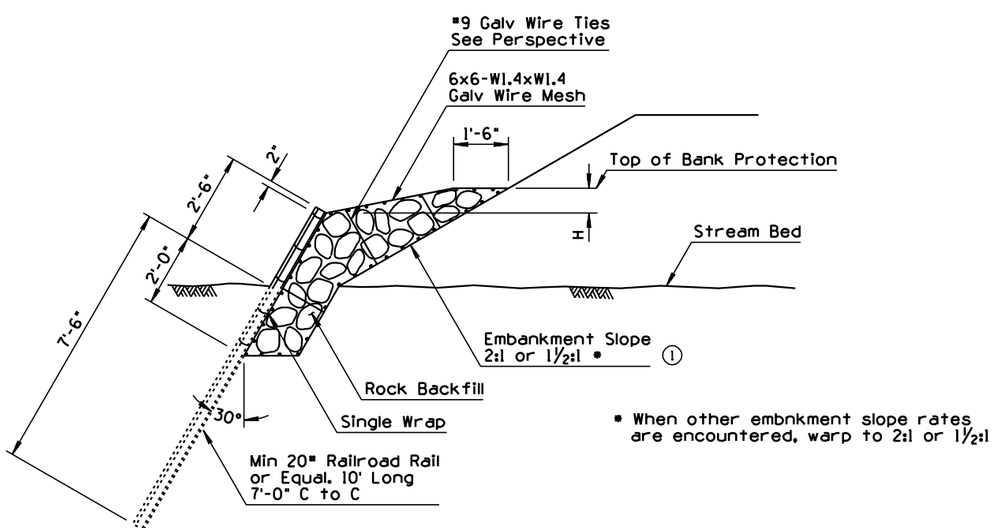

TYPE 3 BANK PROTECTION

②

TYPE	H	TOP OF BANK PROTECTION ABOVE THE STREAM BED
3	0' to 2'	2' to 4'
1	0' to 3'	4' to 7'
2	0' to 6'	6' to 12'

DESIGN APPROVED	STATE OF ARIZONA DEPARTMENT OF TRANSPORTATION DIVISION OF HIGHWAYS STANDARD DRAWINGS	REV.
APPROVED FOR DISTRIBUTION	BANK PROTECTION, RAIL TYPES 1, 2, 3	DRAWING NO. C-17.10

NO	DESCRIPTION OF REVISIONS	MADE BY	DATE
1	REISSUE STD	PNB	7/94
2			
3			
4			

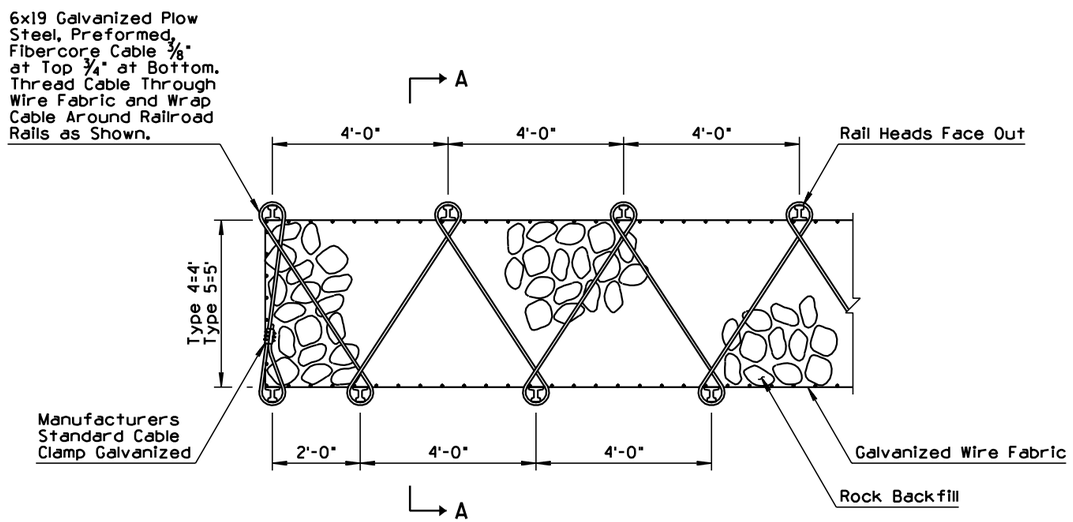

PLAN

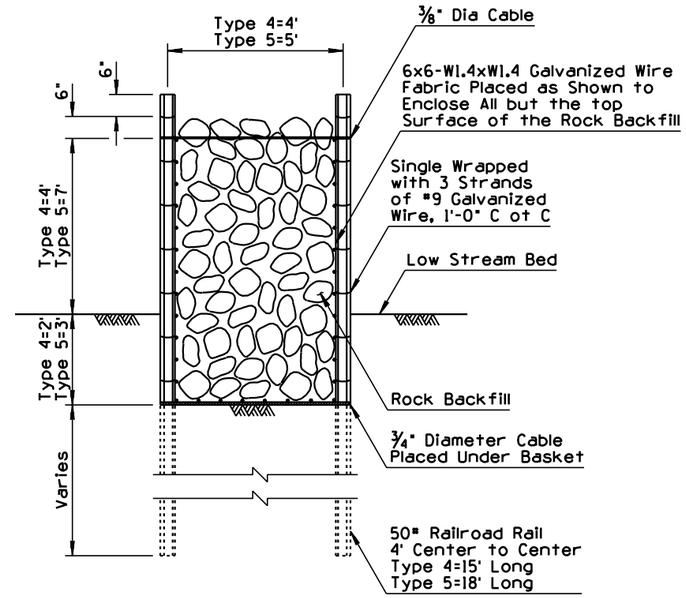

SECTION A-A

TYPE 4 AND 5 BANK PROTECTION

GENERAL NOTES

1. Rock shall be sound and durable, of rounded or angular shape and with a nominal diameter of 8" minimum and 21" maximum. Flat or needle shapes are not acceptable. Rock shall be comprised of 50% min 8" to 12" and 5% max 18" to 21".
2. Wire mesh splice shall have a 6" minimum lap vertically and horizontally.

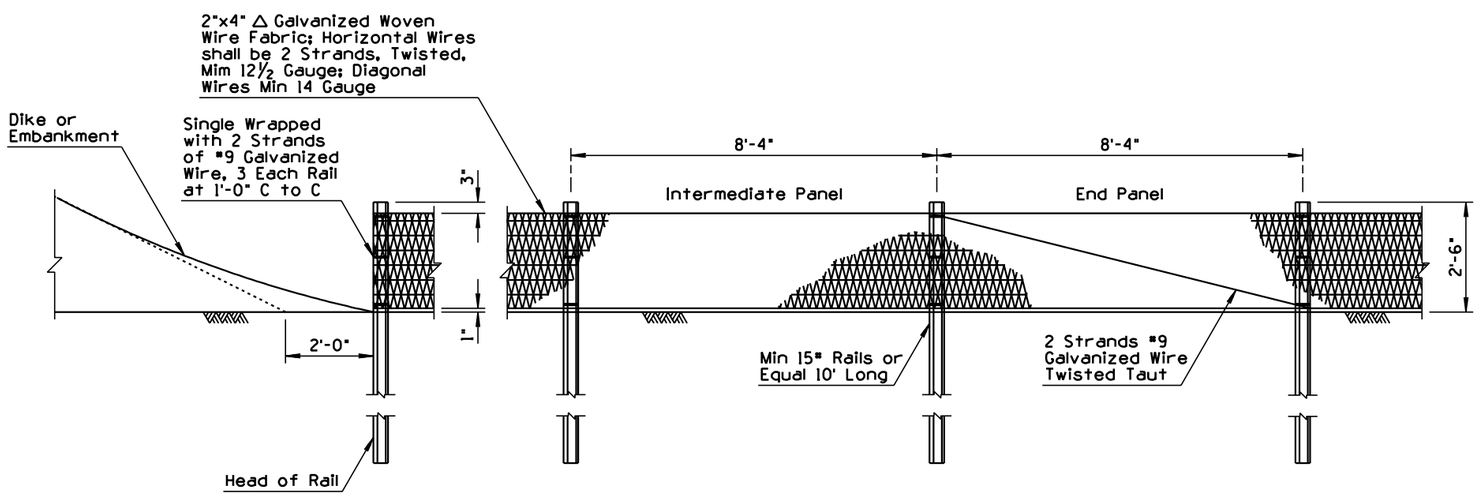

TYPE 6 BANK PROTECTION

DESIGN APPROVED: Terry H. Otterness	STATE OF ARIZONA DEPARTMENT OF TRANSPORTATION DIVISION OF HIGHWAYS STANDARD DRAWINGS	REV. 7/94
APPROVED FOR DISTRIBUTION: Ronald C Williams	① BANK PROTECTION, RAIL TYPES 4,5 AND 6	DRAWING NO. C-17.20

NO	DESCRIPTION OF REVISIONS	MADE BY	DATE
1	REVISED NOTE	PNB	10/95
2	REVISED DETAIL	PNB	10/95
3			
4			

HALF PLAN
BRICK CONCRETE

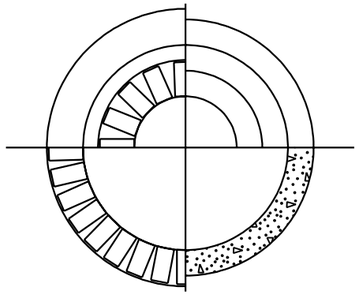

SECTION A-A

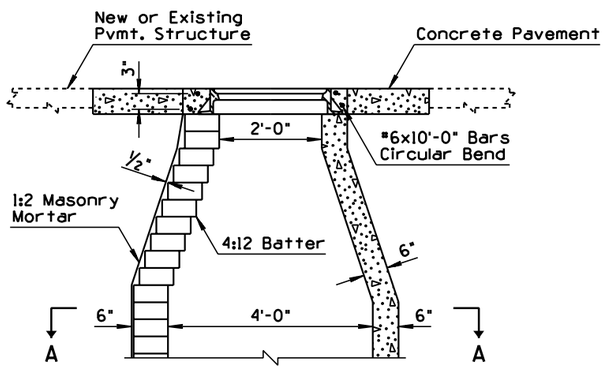

SECTION
BRICK MANHOLE NO. 1 CONCRETE MANHOLE NO. 2

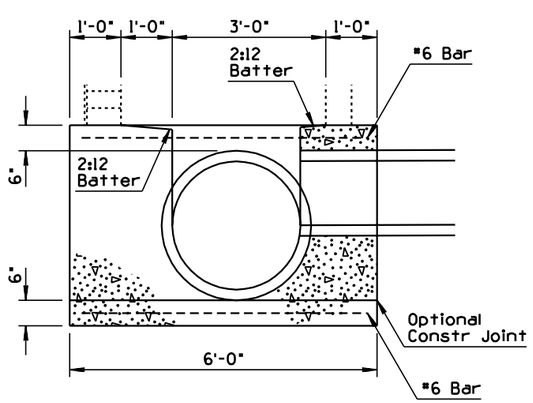

SECTION
STANDARD BASE STRUCTURE
FOR PIPES 6" TO 36" I.D.

HALF PLAN
FOR PIPES 36" I.D. AND SMALLER

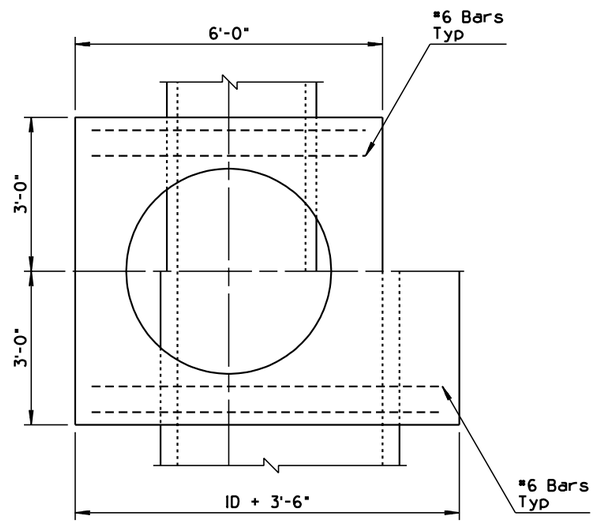

HALF PLAN
FOR PIPES OVER 36" I.D.

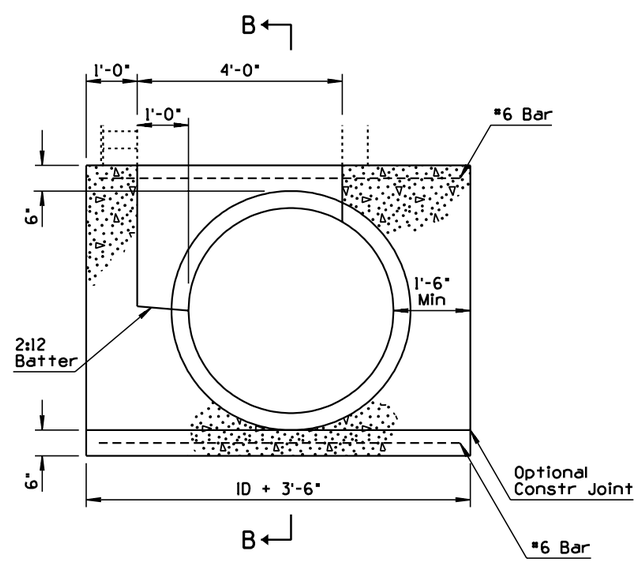

SECTION
STANDARD BASE STRUCTURE
FOR PIPES OVER 36" I.D.

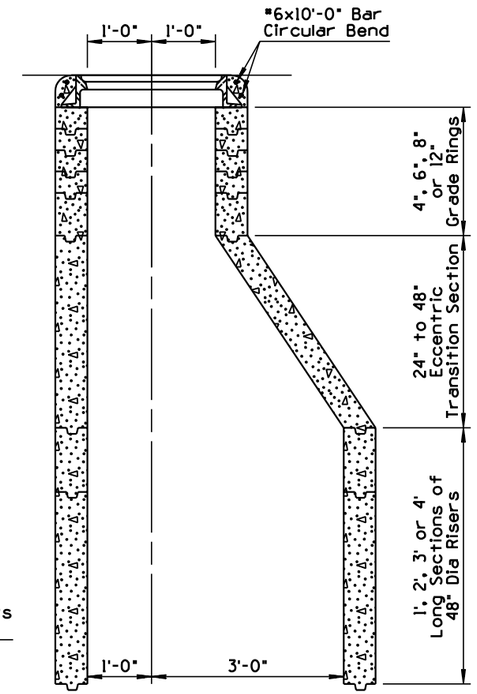

SECTION
MANHOLE NO. 3
PRECAST REINFORCED CONCRETE ②

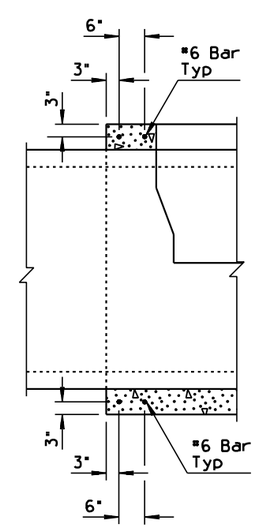

PART SECTION B-B

GENERAL NOTES

1. Precast Manholes shall conform to the requirements of AASHTO M199 except that the compressive strength of each unit will be determined and accepted in accordance with Section 1006.7 of the ADOT Specifications.
2. Concrete for all other manholes shall be Class B.
3. Every fifth course of bricks in Manhole No. 1 shall be laid as stretchers.
4. ① See Std C-18.30 and C-18.40 for additional information and dimensions.
5. See plans for Std C-18.20 frame and cover type.
6. Steps shall be placed in manholes in accordance with the requirements of AASHTO M199.
7. See Std C-18.40 for location of Station Location Reference Point.
8. Manhole height, "H", shall be measured from the lowest pipe invert to the top of the manhole frame.

DESIGN APPROVED Terry H. Otterness	STATE OF ARIZONA DEPARTMENT OF TRANSPORTATION DIVISION OF HIGHWAYS STANDARD DRAWINGS	REV. 10/95
APPROVED FOR DISTRIBUTION Ronald C. Williams	MANHOLE DETAILS	DRAWING NO. C-18.10

NO	DESCRIPTION OF REVISIONS	MADE BY	DATE
1	REVISED DETAIL	PNB	10/95
2	REVISED SECTION	PNB	10/95
3	REVISED GENERAL NOTE	PNB	10/95
4			

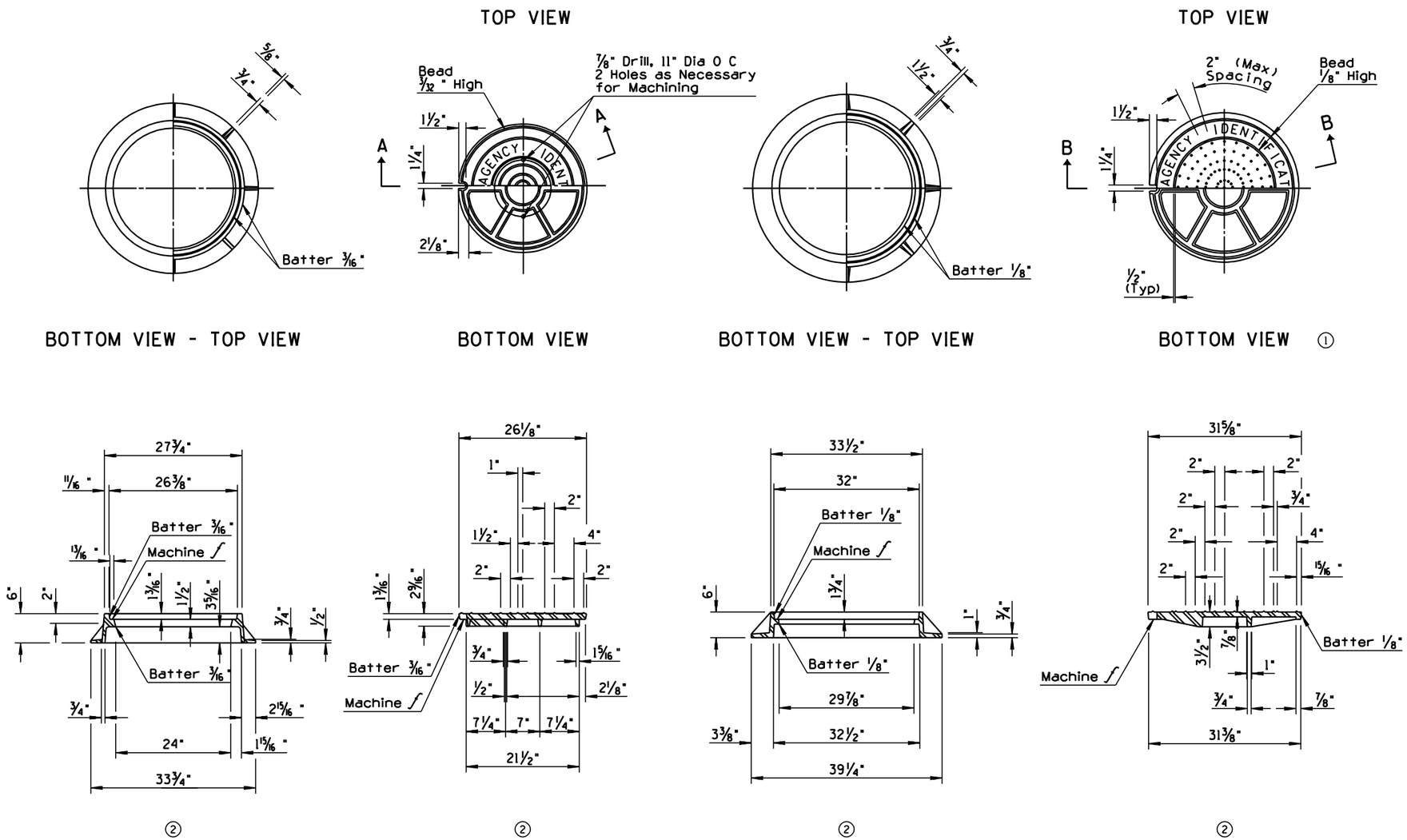

② SECTION OF FRAME

② SECTION A-A OF COVER

24" MANHOLE FRAME & COVER

Approx Wt: Frame 173 Lbs
Cover 170 Lbs

② SECTION OF FRAME

② SECTION B-B

30" MANHOLE FRAME & COVER

Approx Wt: Frame 204 Lbs
Cover 223 Lbs

GENERAL NOTES

③ 1. When specified on the plans, the cover (excluding grates) shall include agency identification and conform to the following: Lettering on manhole cover to contain name of agency and utility as directed. Letters and words to be equally spaced. Letters to be 2" in height and raised 1/8" above level of cover. Type of letters and layout to be submitted for approval.

③ 2. Casting weights shown are minimum weights and are for either cast iron or ductile iron castings. Maximum casting weights shall not exceed 105 percent of weights shown.

3. H20 loading minimum.

4. Details shown are typical.

5. Alternate designs of manhole frame and cover may be utilized with the approval of the engineer as long as minimum loading and weight are equivalent.

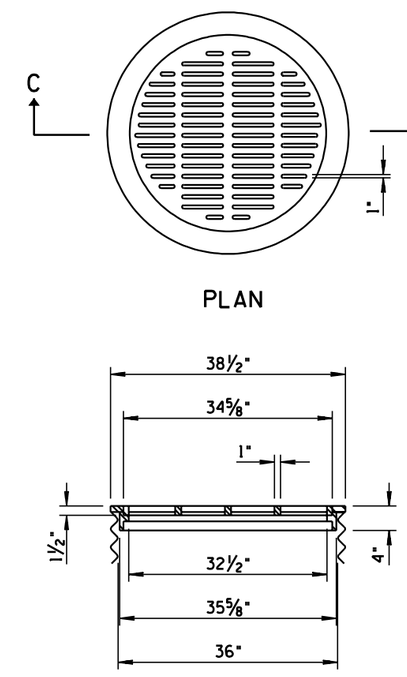

② SECTION C-C

② 36" NOMINAL CMP FRAME & GRATE

Approx Wt: Frame 125 Lbs
Cover 167 Lbs

DESIGN APPROVED	STATE OF ARIZONA DEPARTMENT OF TRANSPORTATION DIVISION OF HIGHWAYS STANDARD DRAWINGS	REV. 10/95
APPROVED FOR DISTRIBUTION	MANHOLE FRAME AND COVER DETAILS	DRAWING NO. C-18.20

NO	DESCRIPTION OF REVISIONS	MADE BY	DATE
1	REISSUE STD	PNB	7/94
2			
3			
4			

GENERAL NOTES

1. All dimensions are minimum except where noted.
2. Location & elevation shown on plans.
3. Compaction to conform to Sect. 303-2 or 501.

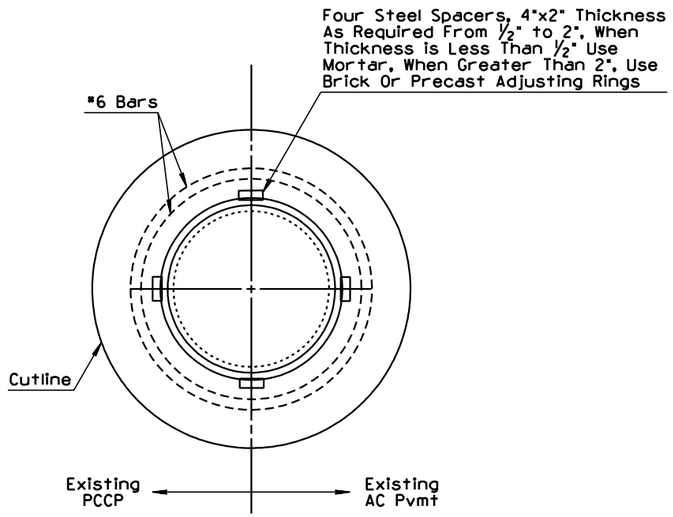

PLAN

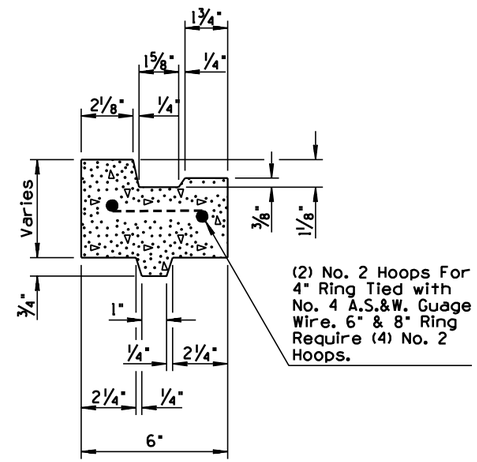

PRECAST ADJUSTING RING DETAIL

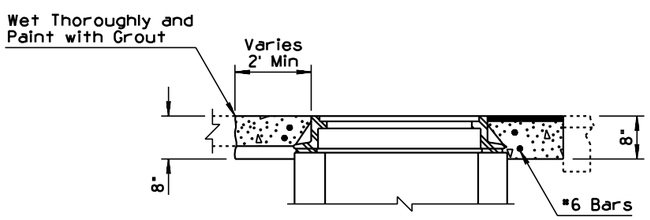

SECTION
MANHOLE COVER FRAME
ADJUSTMENT - PAVEMENT
CUT AND REPLACEMENT

DESIGN APPROVED Terry H. Otterness	STATE OF ARIZONA DEPARTMENT OF TRANSPORTATION DIVISION OF HIGHWAYS STANDARD DRAWINGS	REV. 7/94
APPROVED FOR DISTRIBUTION Ronald C Williams	① MISCELLANEOUS MANHOLE DETAILS	DRAWING NO. C-18.30

NO	DESCRIPTION OF REVISIONS	MADE BY	DATE
1	REISSUE STD	PNB	7/94
2			
3			
4			

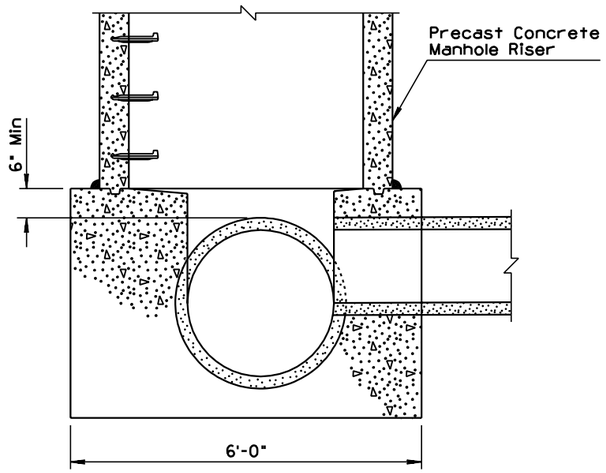

END VIEW

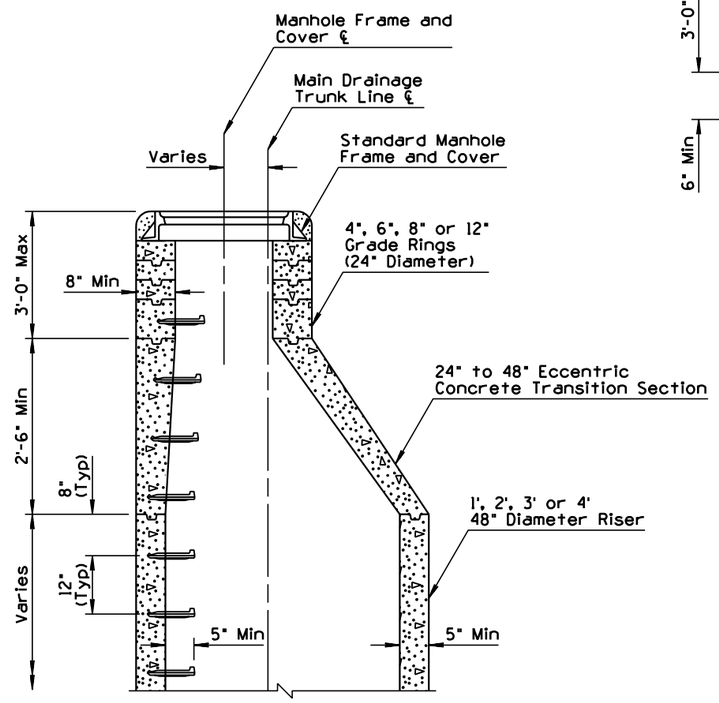

NORMAL INSTALLATION

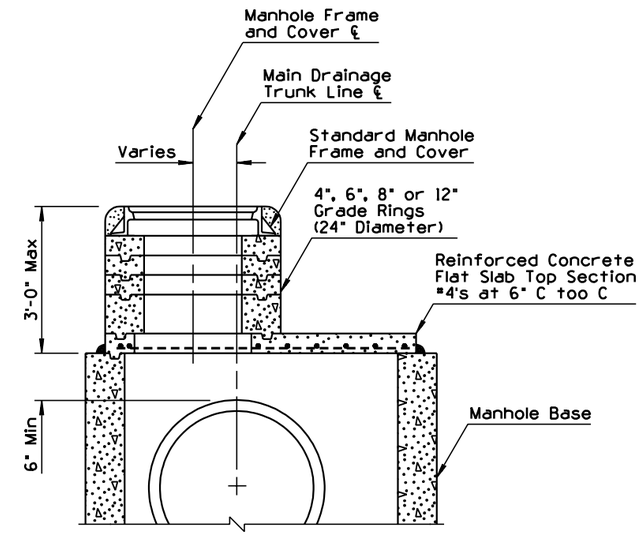

SHALLOW INSTALLATION

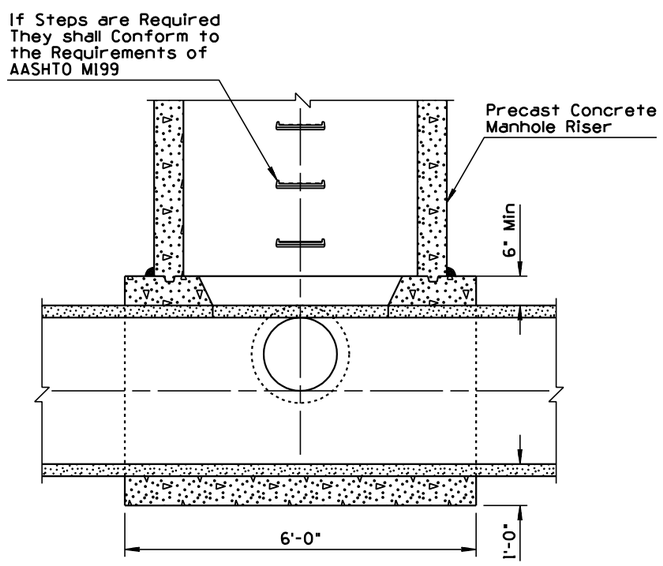

SIDE VIEW

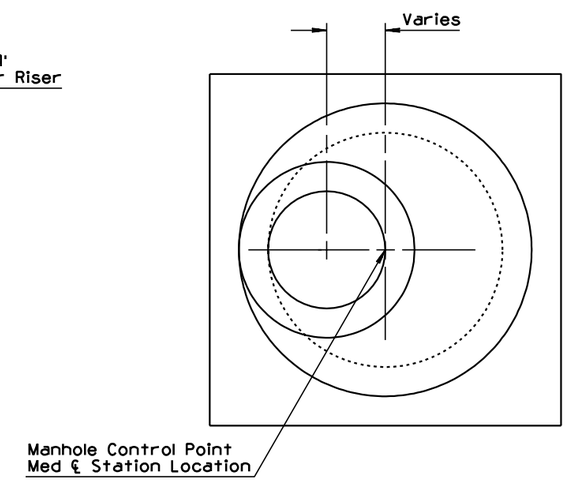

TOP VIEW

DESIGN APPROVED Henry H. Otteman	STATE OF ARIZONA DEPARTMENT OF TRANSPORTATION DIVISION OF HIGHWAYS STANDARD DRAWINGS	REV. 7/94
APPROVED FOR DISTRIBUTION Ronald C. Williams	1 MANHOLE RISER DETAILS	DRAWING NO. C-18.40

NO	DESCRIPTION OF REVISIONS	MADE BY	DATE
1	REARRANGED STD	PNB	7/94
2	REVISED NOTE	PNB	7/94
3	ADDED DETAIL	PNB	7/94
4			

GENERAL NOTES

1. Ford walls shall be Class B concrete.
2. Depth gauge tubing shall be protected against concrete entering through bottom or perforations.
3. Depth gauge tubing and both sides of numeral tabs shall be painted with two coats of white enamel. Numerals and markers shall be painted with one coat of gloss black enamel.

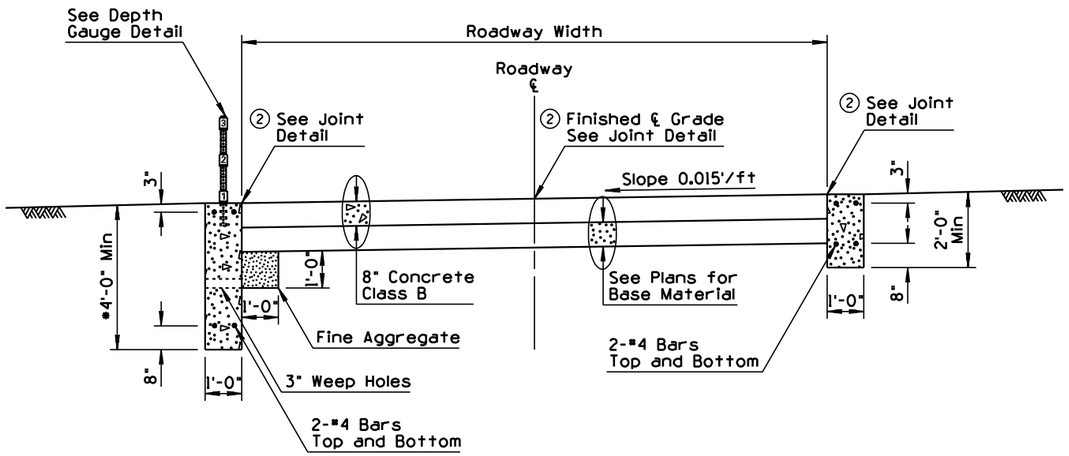

CONCRETE SURFACE ROAD
CONCRETE WALLS

* Min Distance Below Stream Bed

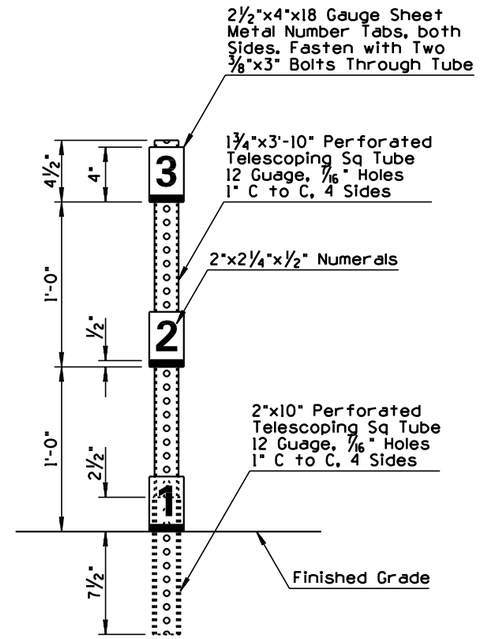

DEPTH GAUGE DETAIL

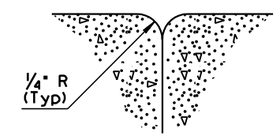

③ JOINT DETAIL

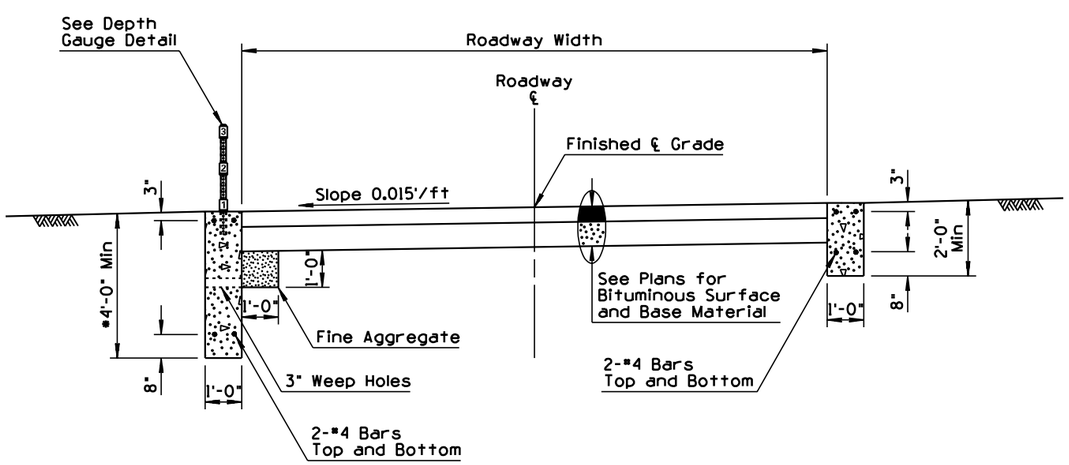

BITUMINOUS SURFACE ROAD
CONCRETE WALLS

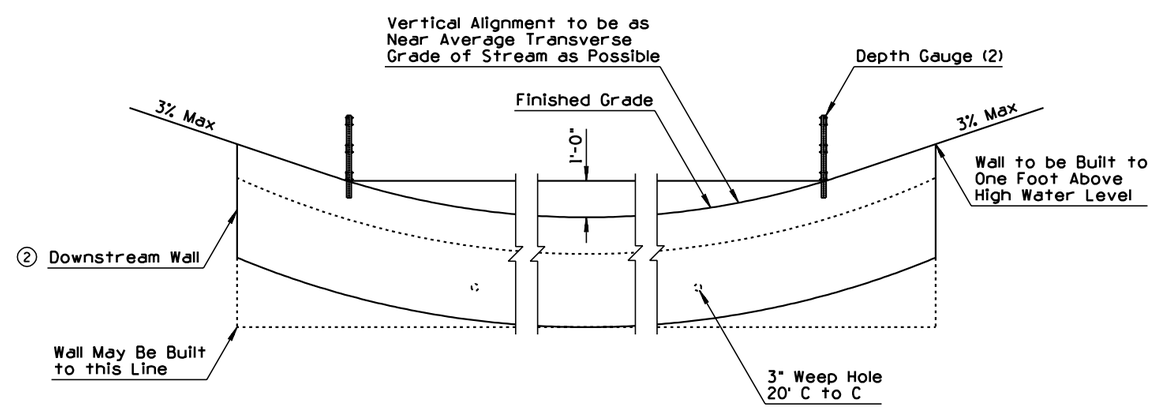

ELEVATION LOOKING UPSTREAM

DESIGN APPROVED Terry H. Otterness	STATE OF ARIZONA DEPARTMENT OF TRANSPORTATION DIVISION OF HIGHWAYS STANDARD DRAWINGS	REV. 7/94
APPROVED FOR DISTRIBUTION Ronald C. Williams	① FORD - CONCRETE WALLS	DRAWING NO. C-19.10

NO	DESCRIPTION OF REVISIONS	MADE BY	DATE
1	REARRANGED STD	PNB	7/94
2			
3			
4			

GENERAL NOTES

1. All timber shall be rough, pressure treated and unpainted.
2. Rock basket, full length of structure, shall be included only when called for on plans.
3. See plans for bituminous surface and base material details.
4. See Std C-19.10 for Depth Gauge details. Depth Gauge foundation may be utility concrete.

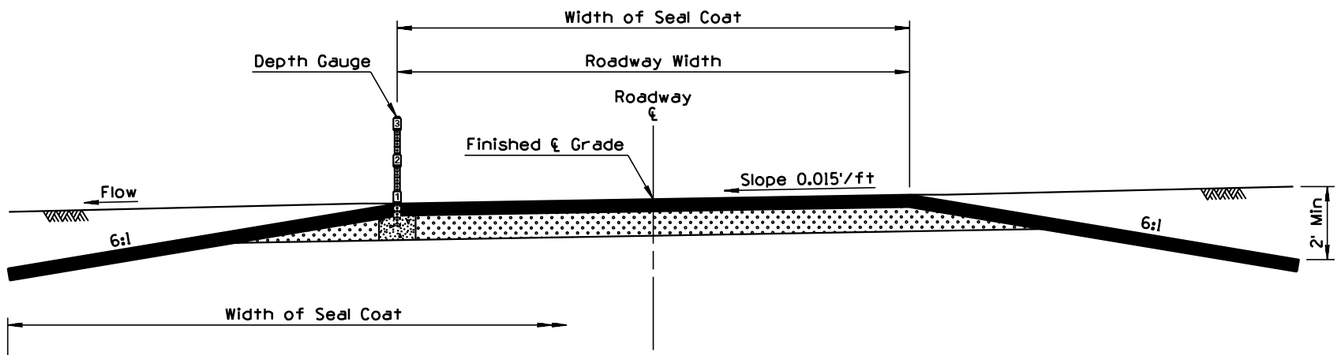

WITH TREATED BASE

TYPE 1
BITUMINOUS SURFACE ROAD

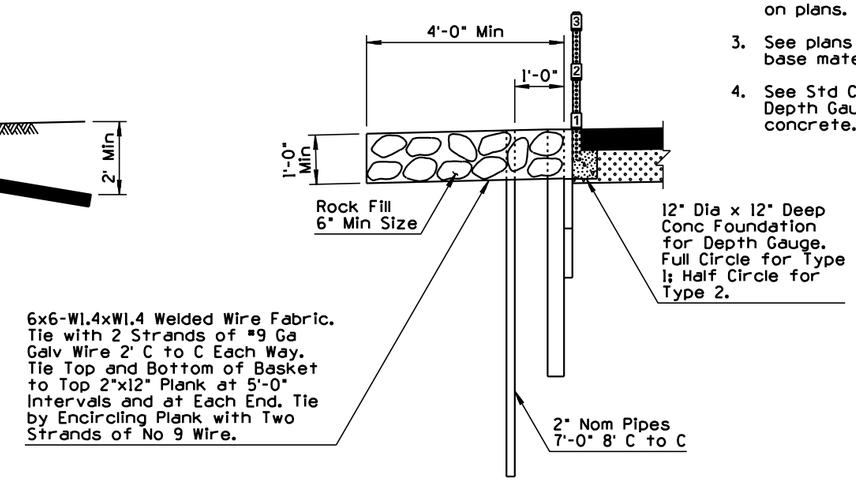

DETAIL A

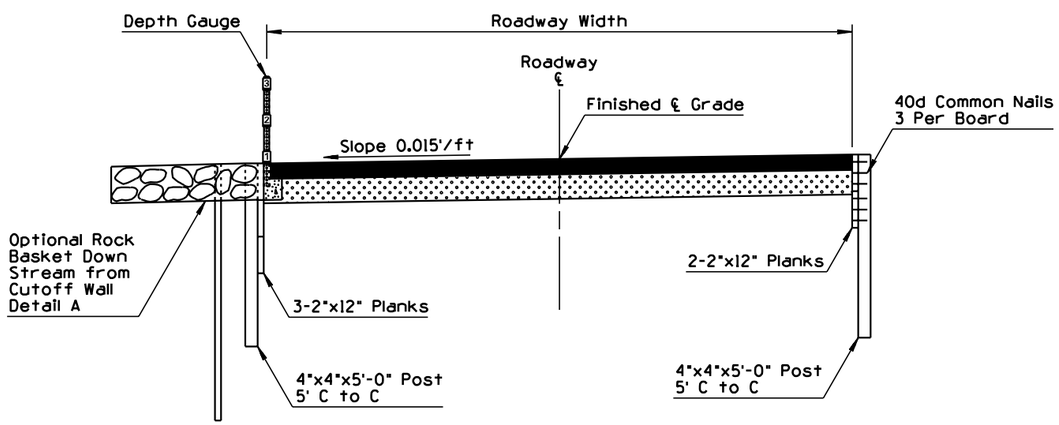

TYPE 2
BITUMINOUS SURFACE FORD
TIMBER CUTOFF WALLS

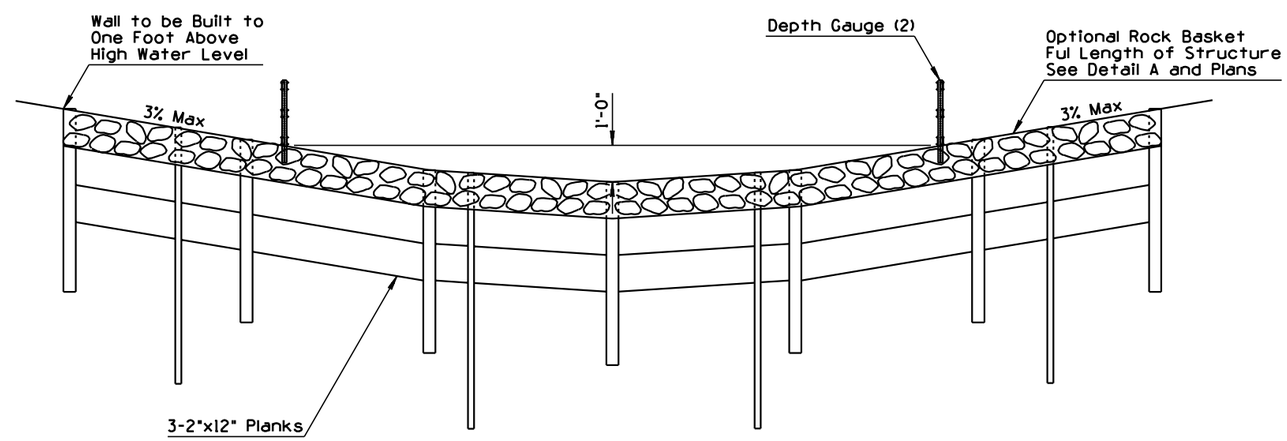

ELEVATION - TYPE 2

DESIGN APPROVED Terry H. Otterness	STATE OF ARIZONA DEPARTMENT OF TRANSPORTATION DIVISION OF HIGHWAYS STANDARD DRAWINGS	REV. 7/94
APPROVED FOR DISTRIBUTION Ronald C. Williams	① FORD - TYPES 1 AND 2	DRAWING NO. C-19.20

NO	DESCRIPTION OF REVISIONS	MADE BY	DATE
1	REVISED STATION TO DECIMAL PLACES	PNB	10/95
2	ADDED #4 REBAR AND NOTE 8	RLF	7/01
3			
4			

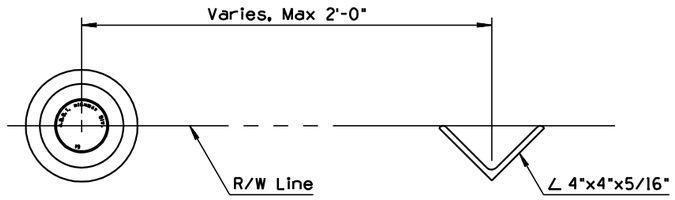

PLAN

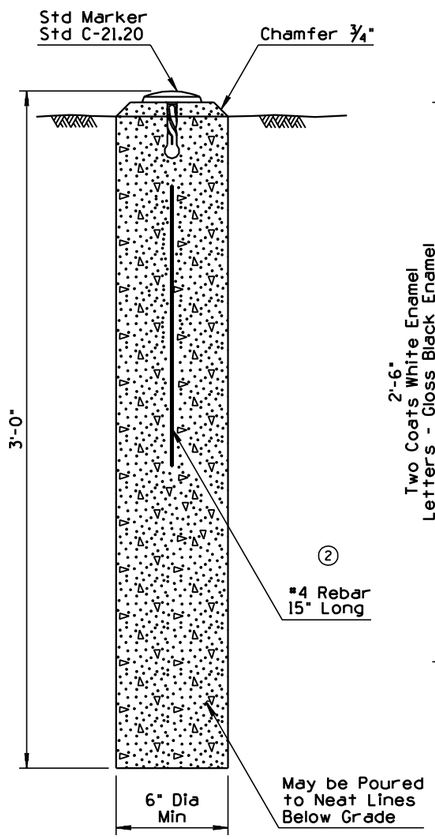

ELEVATION
SURVEY MONUMENT

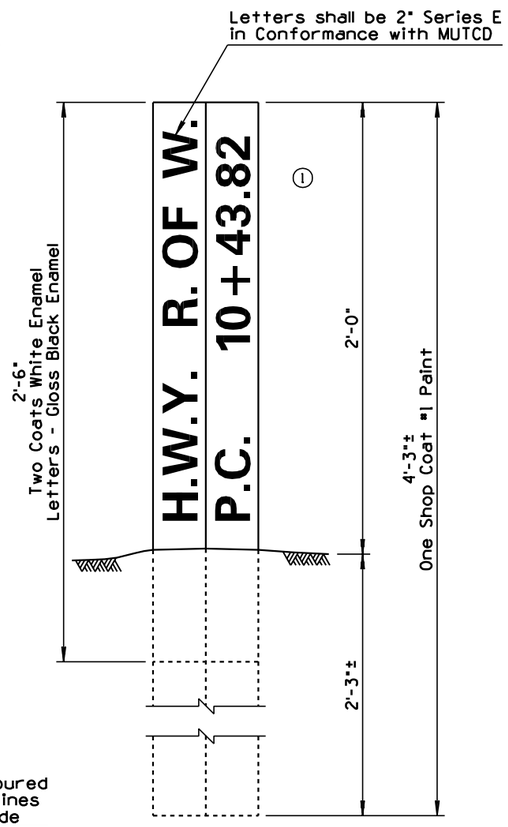

ELEVATION
REFERENCE MARKER

RIGHT OF WAY MARKER

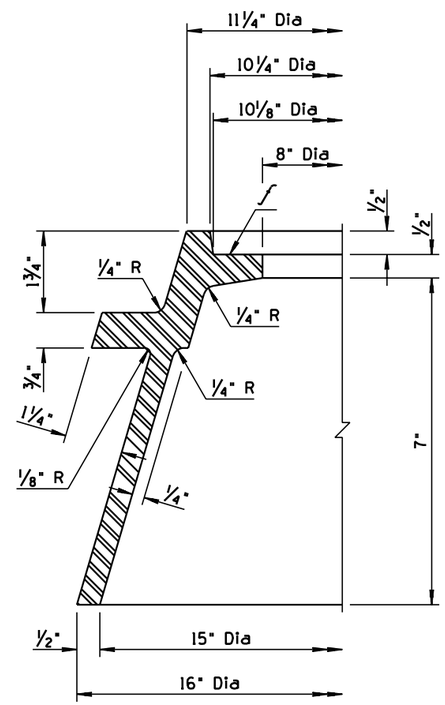

FRAME A

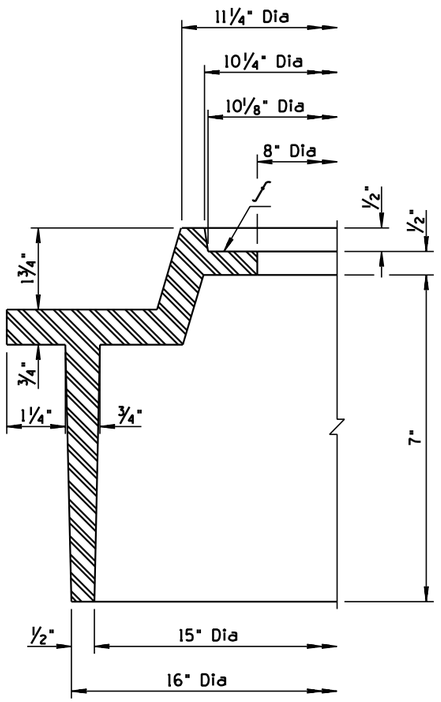

FRAME B

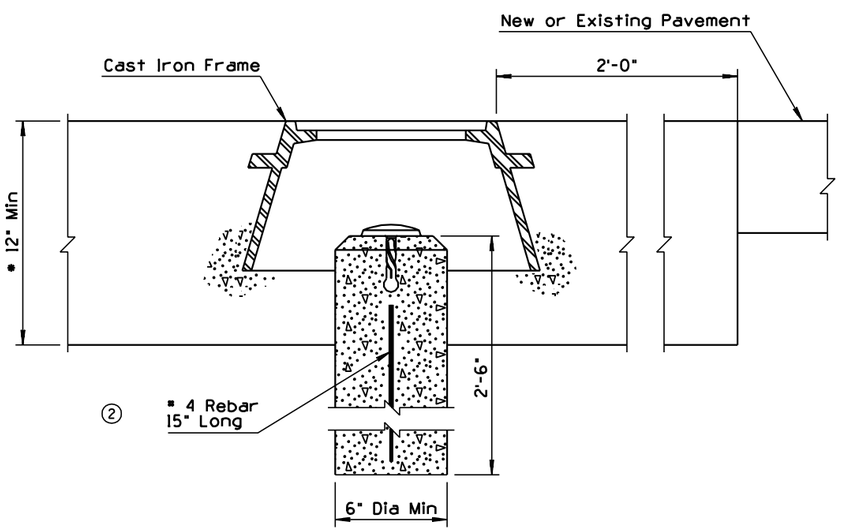

SURVEY MONUMENT
FRAME AND COVER

GENERAL NOTES

1. A survey monument, frame and cover, complete in place shall be considered a unit.
2. A right of way marker, consisting of a survey monument and a reference marker complete in place shall be considered a unit.
3. All markers shall be placed as shown on the plans or as directed by the engineer.
4. Frames may be either Type A or Type B.
5. Frames shall weigh at least 53 pounds.
6. Covers shall weigh at least 16 pounds.
7. Portions of the frame and cover to be machined is shown by the symbol "f". The allowable tolerance for machined areas shall be ±1/64 ". Concrete shall conform to the requirements of the specifications.

② 8. Survey monuments shall be magnetically detectable.

* 12" or pavement structure thickness, whichever is greater.

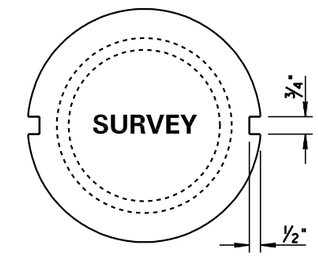

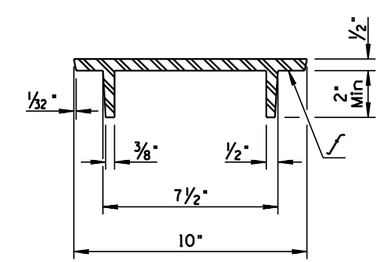

COVER SECTION

DESIGN APPROVED	STATE OF ARIZONA DEPARTMENT OF TRANSPORTATION DIVISION OF HIGHWAYS STANDARD DRAWINGS	REV. 7/01
APPROVED FOR DISTRIBUTION	SURVEY MONUMENT, FRAME AND COVER, RIGHT OF WAY MARKER	DRAWING NO. C-21.10

NO	DESCRIPTION OF REVISIONS	MADE BY	DATE
1	REISSUE STD	PNB	7/94
2	ADDED NOTE	RLF	7/01
3	ADDED NOTE	RLF	7/01
4			

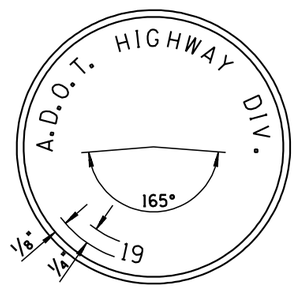

PLAN

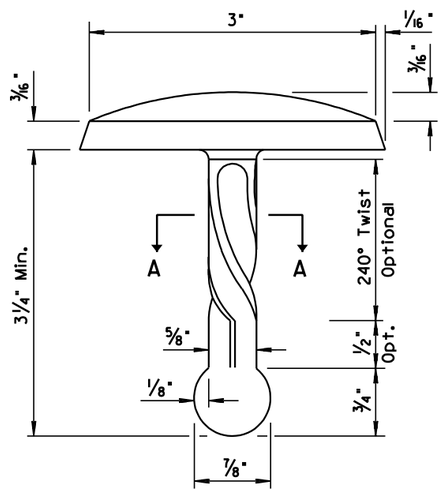

ELEVATION
STANDARD MARKER

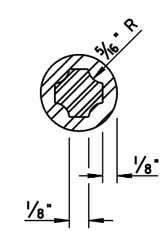

SECTION A-A

GENERAL NOTES

1. Standard Marker may be used as bench, survey monument or R/W markers.
2. Standard Marker shall be made of brass, bronze or aluminum.
3. Standard Marker will be furnished by the Department. Cast-in lettering format may vary.
4. Bench Marks shall be established on headwalls, bridge curbs or other permanent structures.
5. Surfaces of Aluminum Markers in contact with concrete shall be epoxy coated.
6. Fluted shank may be straight or twisted.
7. Station, Elevation, Year, or other information shall be hand stamped in field, as approved by the Engineer.
2. 8. When used as a R/W Marker or on Section Lines, the Land Surveyor's registration number shall be stamped on the marker.
3. 9. When used to define Section Lines, the marker shall be stamped in accordance with the BLM "Manual of Surveying Instructions."

DESIGN APPROVED APPROVED FOR DISTRIBUTION	STATE OF ARIZONA DEPARTMENT OF TRANSPORTATION DIVISION OF HIGHWAYS STANDARD DRAWINGS	REV. 7/01
	1 STANDARD MARKER	DRAWING NO. C-21.20

NO	DESCRIPTION OF REVISIONS	MADE BY	DATE
1	REARRANGED STD	PNB	7/94
2			
3			
4			

GENERAL NOTES

1. All concrete shall be Class B.

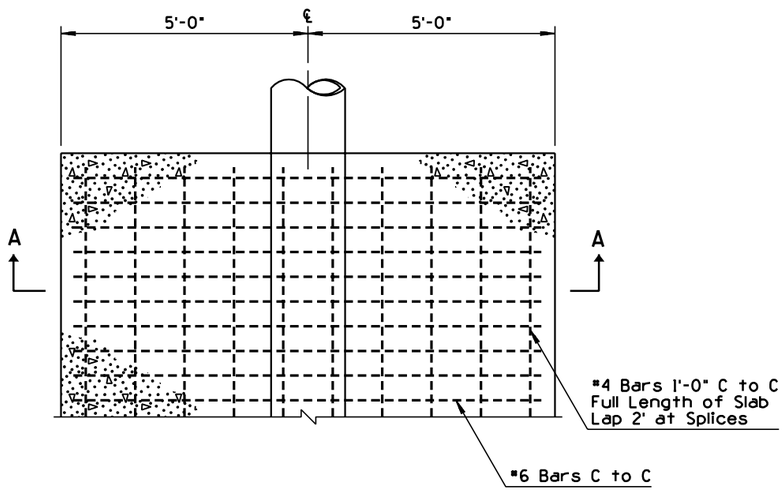

FOR SINGLE INSTALLATION	
QUANTITIES PER FT OF SLAB LENGTH	
CONCRETE	REINFORCING STEEL
0.31 CY	35.22 Lbs

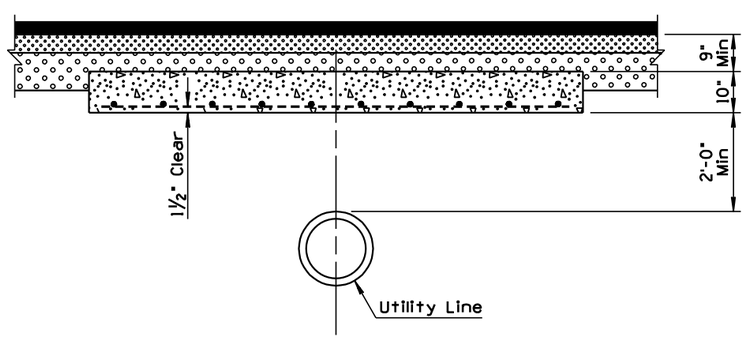

SECTION A-A

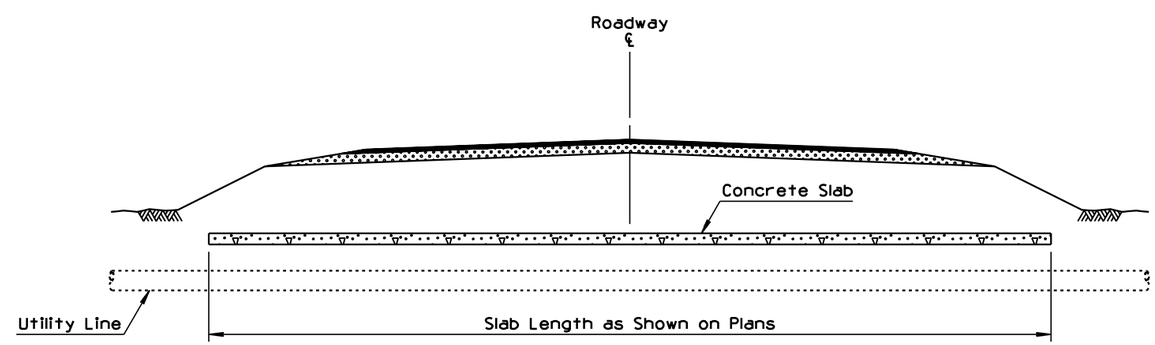

CROSS SECTION

DESIGN APPROVED	STATE OF ARIZONA DEPARTMENT OF TRANSPORTATION DIVISION OF HIGHWAYS STANDARD DRAWINGS	REV. 7/94
APPROVED FOR DISTRIBUTION	① UTILITY LINE, PROTECTIVE CONCRETE SLAB	DRAWING NO. C-22.10

NO	DESCRIPTION OF REVISIONS	MADE BY	DATE
1	REVISED REBAR CLEARANCE FROM 2" TO 3"	PNB	10/95
2			
3			
4			

GENERAL NOTES

1. Type A encasement to be used for sewer laterals or house connections BELOW water lines.
2. Type B encasement to be used for sewer laterals or house connections ABOVE water lines.
3. The encasement shall extend at least 6' on each side of the water line and must include the nearest joint.
4. Protection for Type A required when distance from bottom of water to top of sewer line is 24" or less. When the sewer is a 4" or 6" house connection no protection is required if distance is more than 12".
5. For Type A crossings, Class 150 C.I.P. or ductile iron pipe may be used as an alternate. For Type B crossing reinforced encasement is always required.

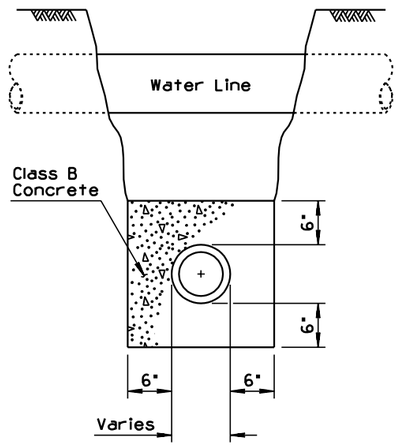

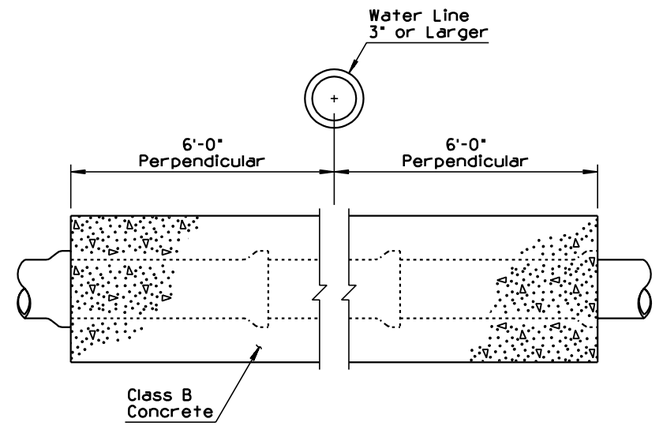

TYPE A ENCASEMENT

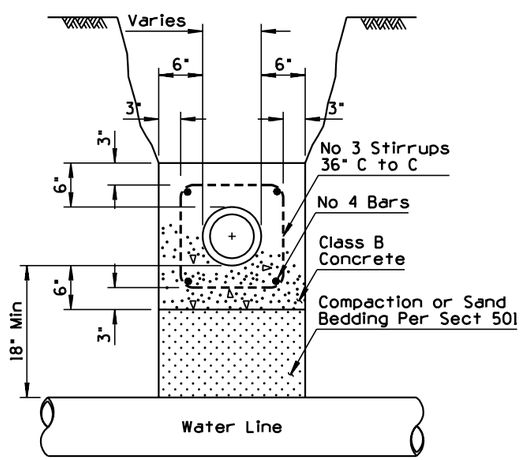

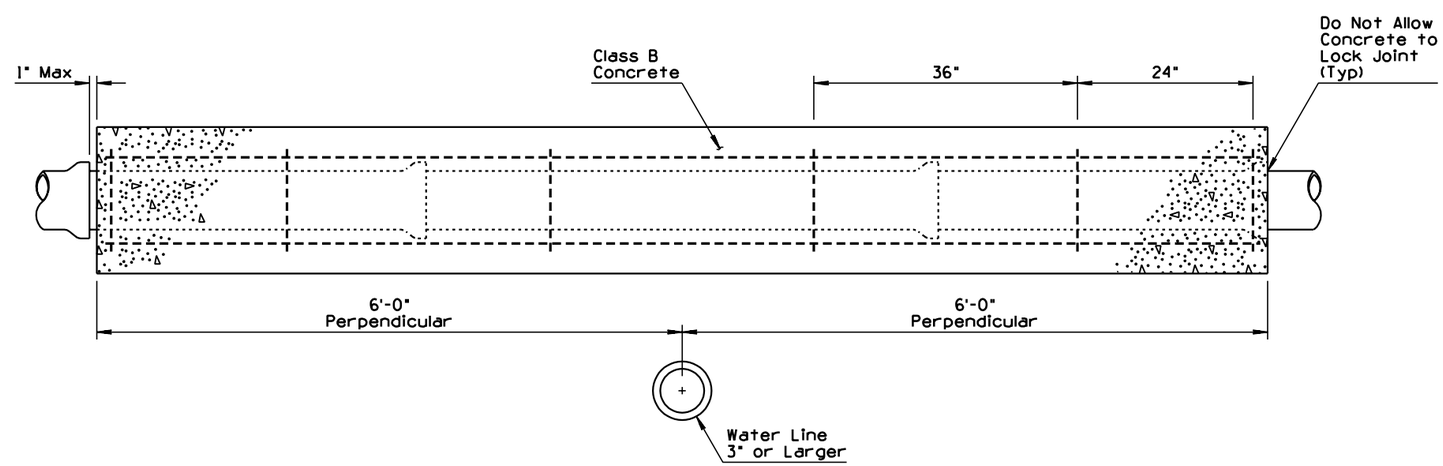

TYPE B ENCASEMENT ①

DESIGN APPROVED Henry H. Otteness	STATE OF ARIZONA DEPARTMENT OF TRANSPORTATION DIVISION OF HIGHWAYS STANDARD DRAWINGS	REV. 10/95
APPROVED FOR DISTRIBUTION Ronald C. Williams	SANITARY SEWER ENCASEMENT	DRAWING NO. C-22.15

NO	DESCRIPTION OF REVISIONS	MADE BY	DATE
1	ADDED GENERAL NOTE	PNB	10/95
2	ADDED REBAR TO VIEW	PNB	10/95
3			
4			

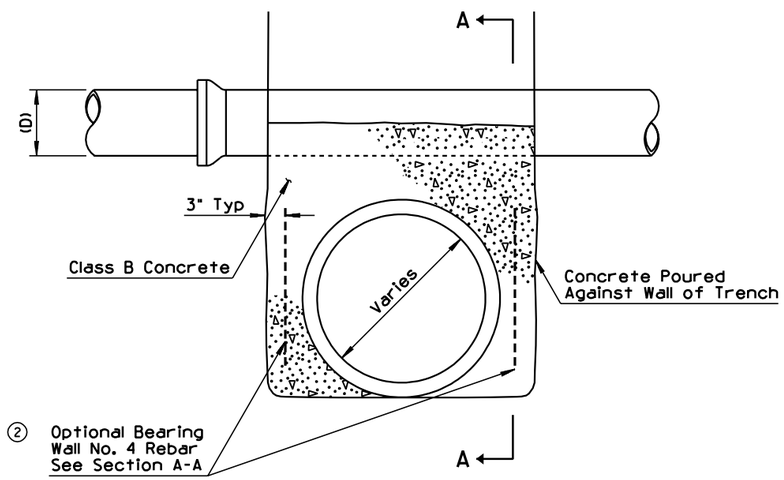

TYPE A

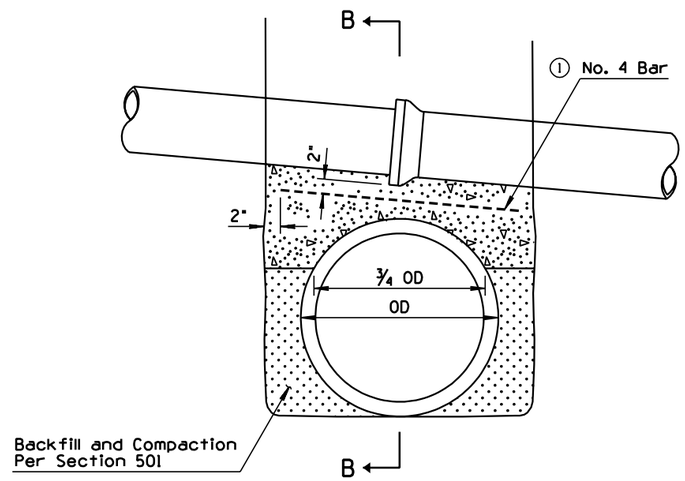

TYPE B

GENERAL NOTES

1. Type A pipe support may be used for any Type crossing condition.
2. Type C pipe support may be used for crossing pipes with a bell diameter of 18" or less if sufficient clearance over storm sewer is available and total span is less than 34'.
3. Intermediate pipe support shall be used in conjunction with Type C pipe support if total span exceeds max. W in table.
4. The contractor shall be responsible for furnishing all supports both permanent and temporary. Temporary supports shall not be a separate pay item.
5. Permanent pipe supports may be decreased from plan quantities or extended to include some listed below as temporary supports if conditions warrant these changes at the time of construction. Decision shall be made by the engineer.
6. When Type A pipe support is used and whenever so directed by the engineer, the contractor shall pierce the wall with suitable openings to prevent unequal pressure resulting from flooding of the backfill. The volume of the pierced opening shall not exceed ½ the volume of the supporting wall.
7. Use Type B pipe support instead of Type C when clearance between pipes is less than Y in table.
8. ① Concrete cover for reinforcing steel shall be 3", minimum.

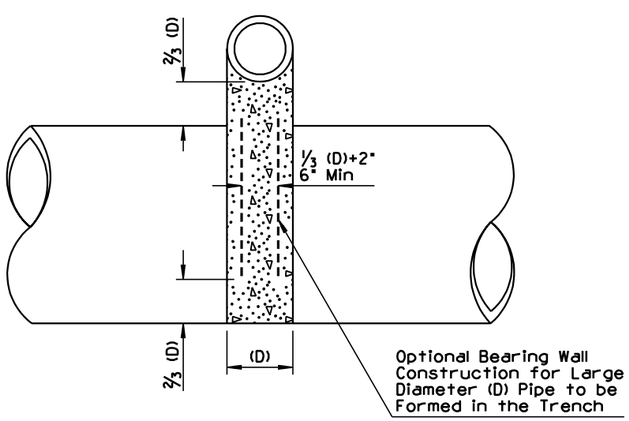

SECTION A-A

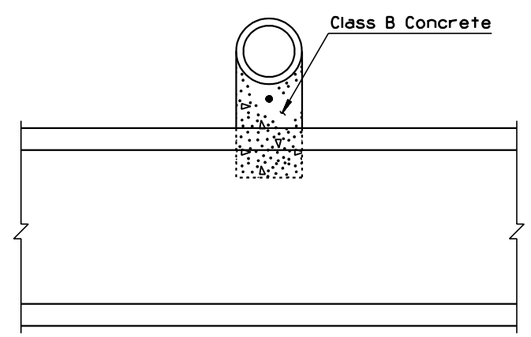

SECTION B-B

SCHEDULE OF REQUIRED SUPPORTS		
PERMANENT	TEMPORARY	
Sewer Lines	Cast Iron Pipe	Conc Storm Drain
	Conc Irrig Pipe	Conc Box Culvert
	Buried Telco	Traffic Control Conduit
	Gas Pipes	Water and Sewer Lines

NOTE:
Other utilities as noted on the plans or as required by the engineer at time of construction.

DESIGN APPROVED Terry H. Otterness	STATE OF ARIZONA DEPARTMENT OF TRANSPORTATION DIVISION OF HIGHWAYS STANDARD DRAWINGS	REV. 10/95
APPROVED FOR DISTRIBUTION Ronald C Williams	PIPE SUPPORT ACROSS TRENCHES	DRAWING NO. C-22.20 Sheet 1 of 3

NO	DESCRIPTION OF REVISIONS	MADE BY	DATE
1	REVISED REBAR CLEARANCE	PNB	10/95
2			
3			
4			

TABLE

'W'	DEPTH OF COVER ON SUPPORTS 0' TO 8' BAR NO.	Y	8' TO 16' BAR NO.	Y
TO 6'	5	8"	6	11"
7'	5	9"	6	12"
8'	5	10"	6	13"
9'	6	11"	6	14"
10'	6	12"	7	15"
11'	6	13"	7	16"
12'	6	14"	7	17"
13'	7	15"	7	19"
14'	7	16"	8	20"
15'	7	17"	8	21"
16'	7	18"		
17'	8	19"		

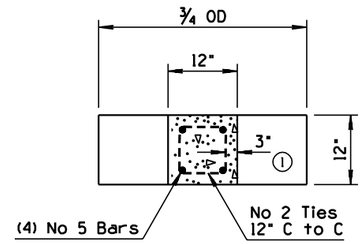

SECTION C-C

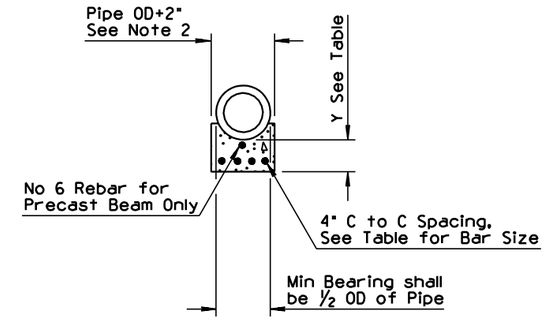

SECTION D-D

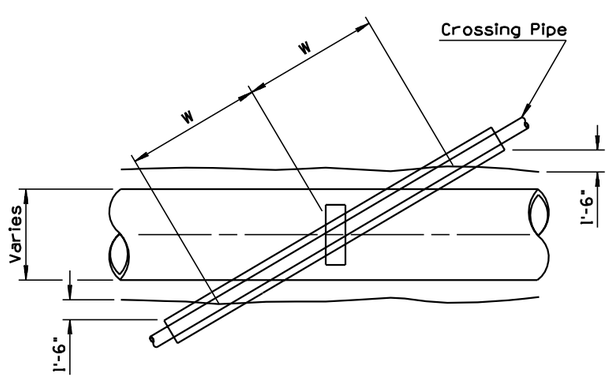

PLAN FOR TYPE B SUPPORT

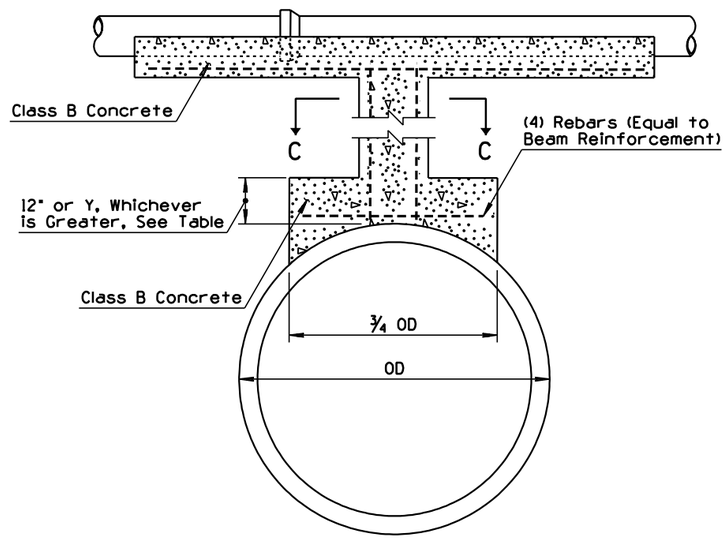

INTERMEDIATE SUPPORT FOR
TYPE B CROSSINGS

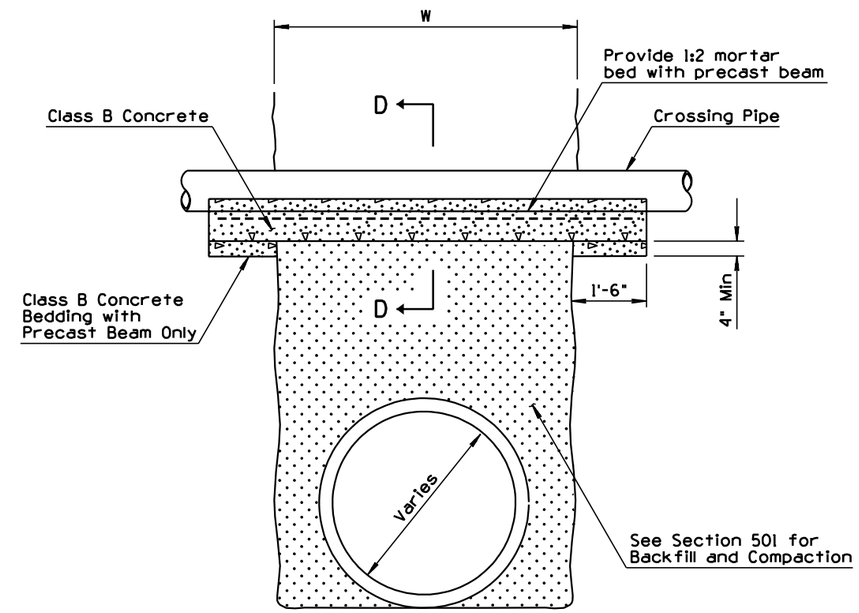

TYPE C

DESIGN APPROVED Terry H. Otterness	STATE OF ARIZONA DEPARTMENT OF TRANSPORTATION DIVISION OF HIGHWAYS STANDARD DRAWINGS	REV. 10/95
APPROVED FOR DISTRIBUTION Ronald C. Williams	PIPE SUPPORT ACROSS TRENCHES	DRAWING NO. C-22.20 Sheet 2 of 3

NO	DESCRIPTION OF REVISIONS	MADE BY	DATE
1	REISSUE STD	PNB	7/94
2			
3			
4			

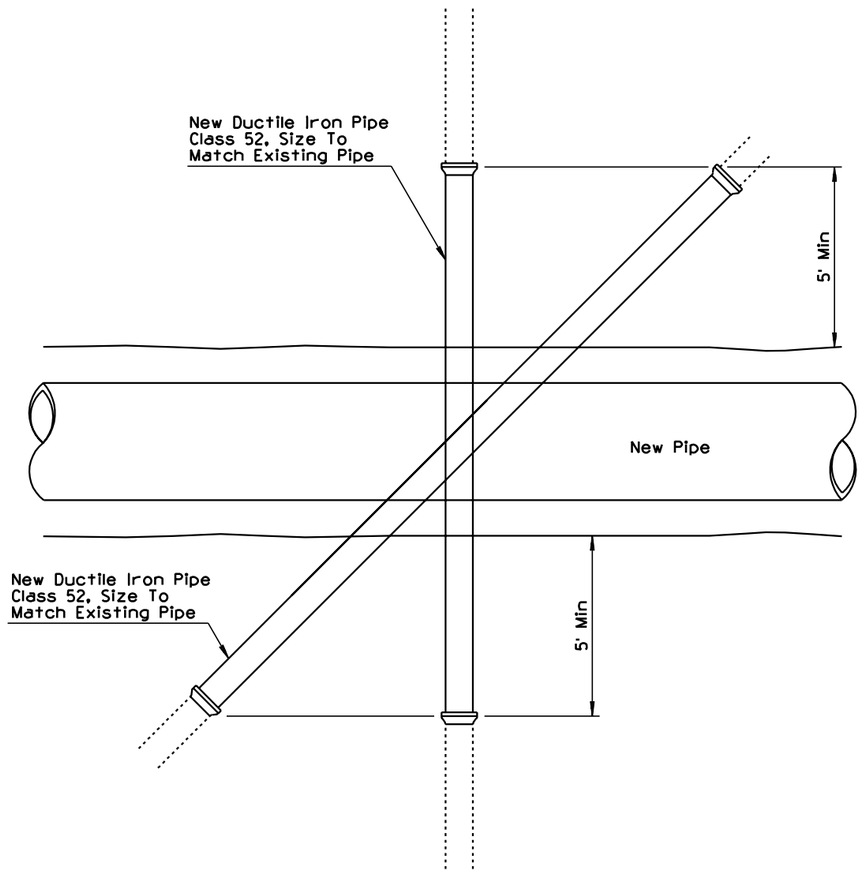

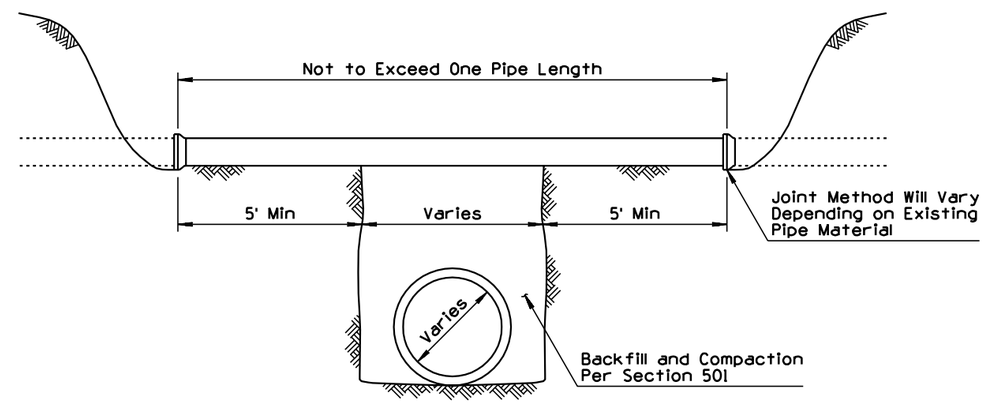

ALTERNATE TO PIPE SUPPORT

DESIGN APPROVED Terry H. Otterness	STATE OF ARIZONA DEPARTMENT OF TRANSPORTATION DIVISION OF HIGHWAYS STANDARD DRAWINGS	REV. 7/94
APPROVED FOR DISTRIBUTION Ronald C Williams	① PIPE SUPPORT ACROSS TRENCHES	DRAWING NO. C-22.20 Sheet 3 of 3

NO	DESCRIPTION OF REVISIONS	MADE BY	DATE
1	REARRANGED STD	PNB	7/94
2			
3			
4			

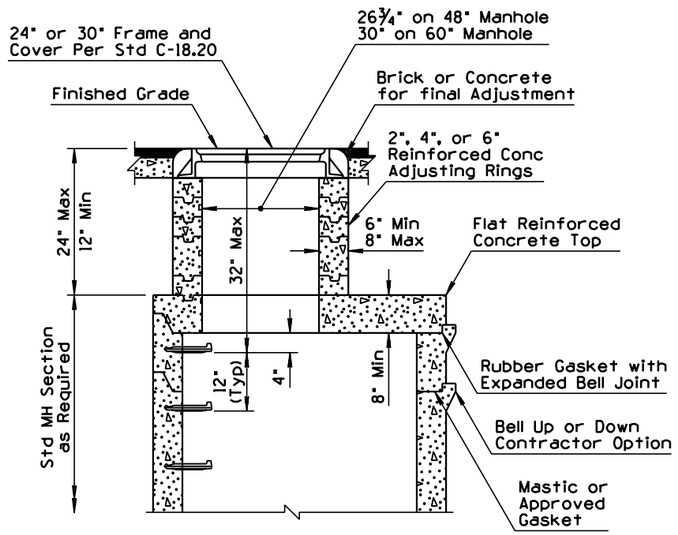

TYPE B TOP

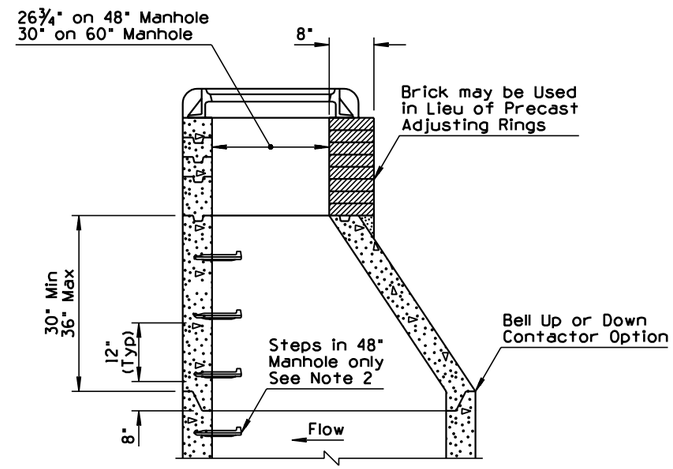

TYPE A TOP
Pre-Cast Eccentric Conical Top Manhole

GENERAL NOTES

1. Pre-cast, reinforced manhole sections shall be manufactured in accordance with AASHTO M199 except that the compressive strength of each unit will be determined and accepted in accordance with section 1006.7 of the specifications.
2. Manhole steps shall be installed at the site of the manhole section manufacture in accordance with industry standards meeting AASHTO M199 requirements. Steps not required in 60" manhole.
3. Use low alkali cement only.
4. Pipe sizes and elevation shown on plans.
5. Frame and cover shall be adjusted to the finished grade prior to placing of the asphaltic concrete or PCCP surface.

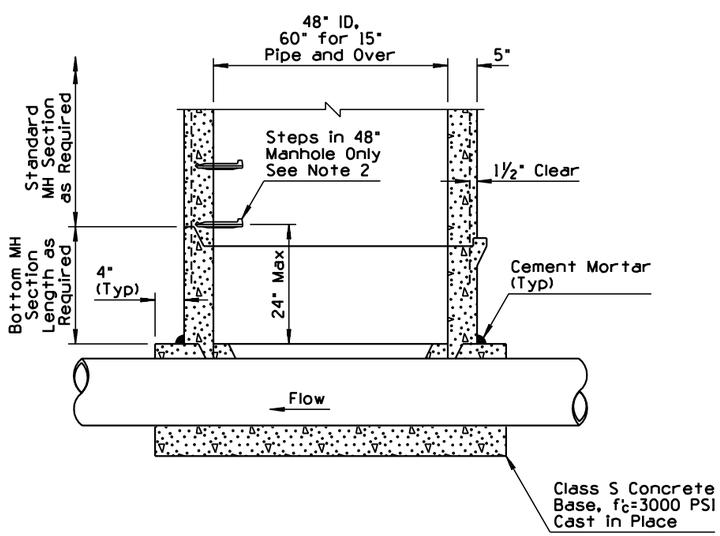

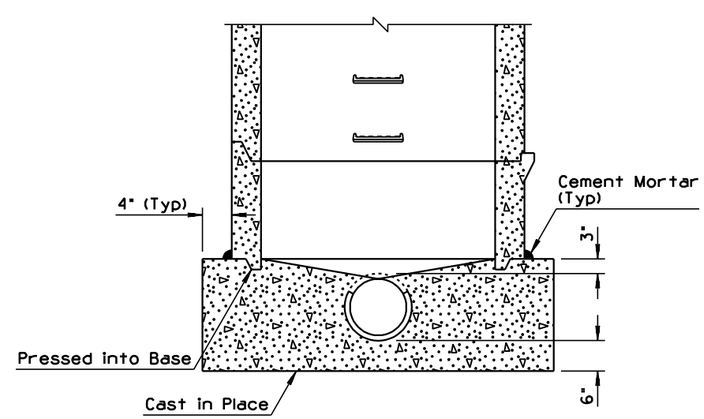

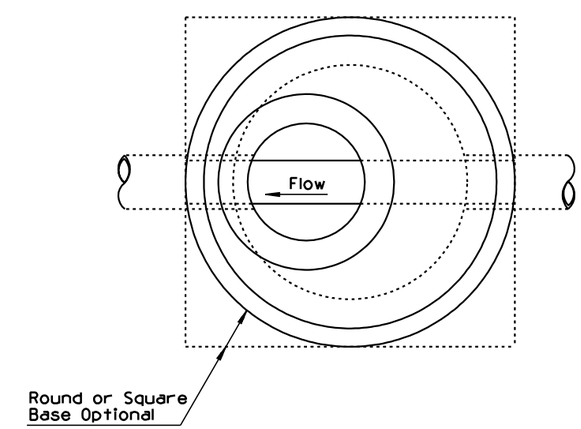

PRECAST SEWER MANHOLE

DESIGN APPROVED	STATE OF ARIZONA DEPARTMENT OF TRANSPORTATION DIVISION OF HIGHWAYS STANDARD DRAWINGS	REV. 7/94
APPROVED FOR DISTRIBUTION	① PRECAST SANITARY SEWER MANHOLES	DRAWING NO. C-22.25

NO	DESCRIPTION OF REVISIONS	MADE BY	DATE
1	REARRANGED STD	PNB	7/94
2			
3			
4			

GENERAL NOTES

1. Compact soil at end of pipe to 95% of maximum density.
2. If depth of cover is less than 5' or greater than 10', increase plug thickness a minimum of 4".

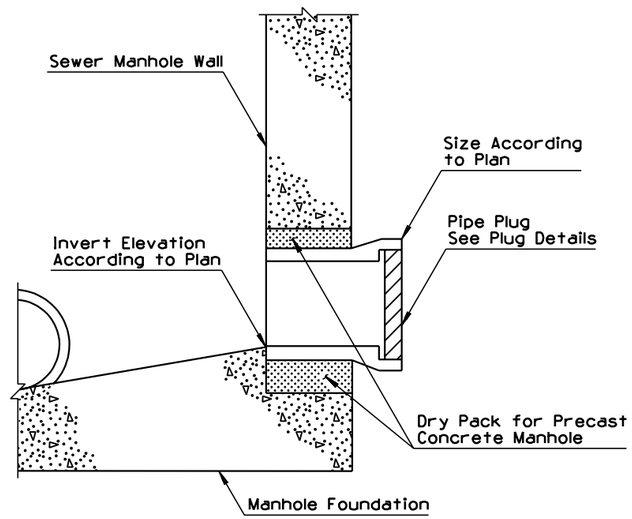

TYPICAL STUB OUT

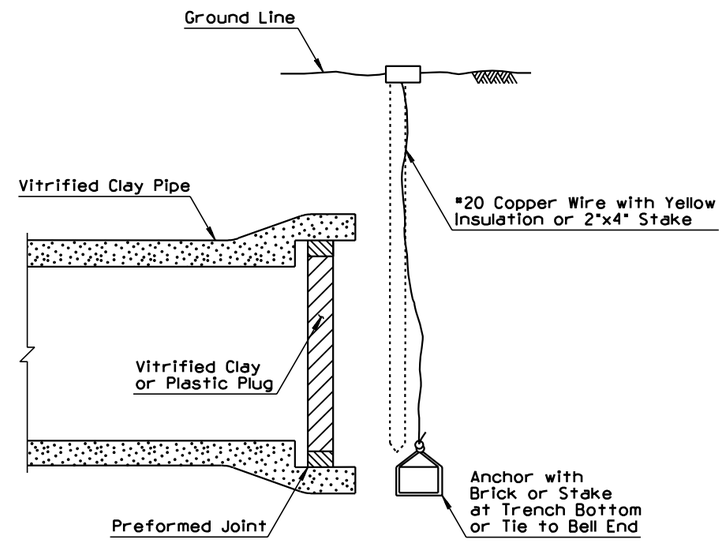

PIPE PLUG MARKER

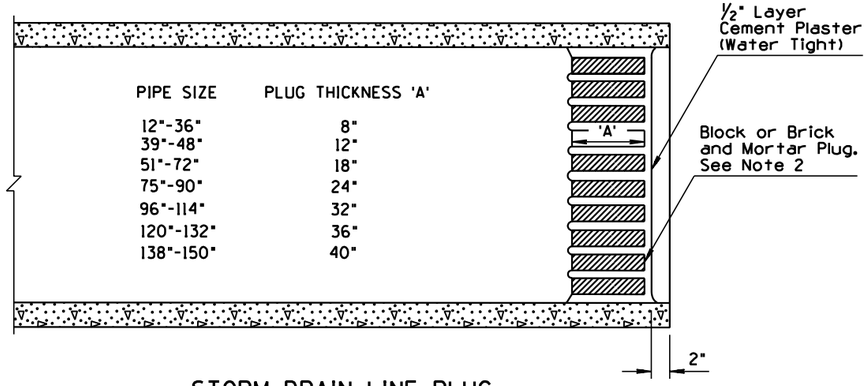

PIPE SIZE	PLUG THICKNESS 'A'
12"-36"	8"
39"-48"	12"
51"-72"	18"
75"-90"	24"
96"-114"	32"
120"-132"	36"
138"-150"	40"

STORM DRAIN LINE PLUG

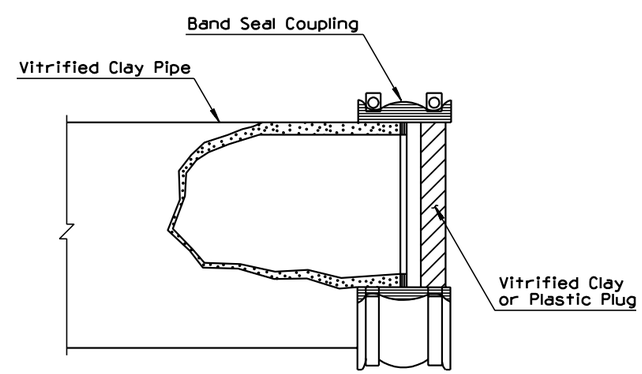

SEWER LINE PLUG

DESIGN APPROVED: Terry H. Otterness	STATE OF ARIZONA DEPARTMENT OF TRANSPORTATION DIVISION OF HIGHWAYS STANDARD DRAWINGS	REV. 7/94
APPROVED FOR DISTRIBUTION: Ronald C Williams	① STUB OUT AND PLUG	DRAWING NO. C-22.30

NO	DESCRIPTION OF REVISIONS	MADE BY	DATE
1	REISSUE STD	PNB	7/94
2			
3			
4			

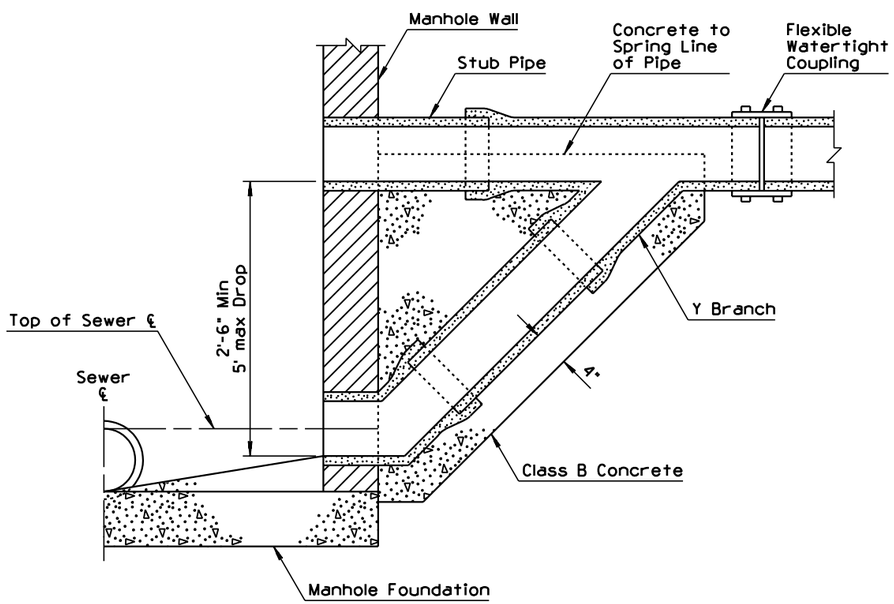

TYPE A
2.5' TO 5' DROP

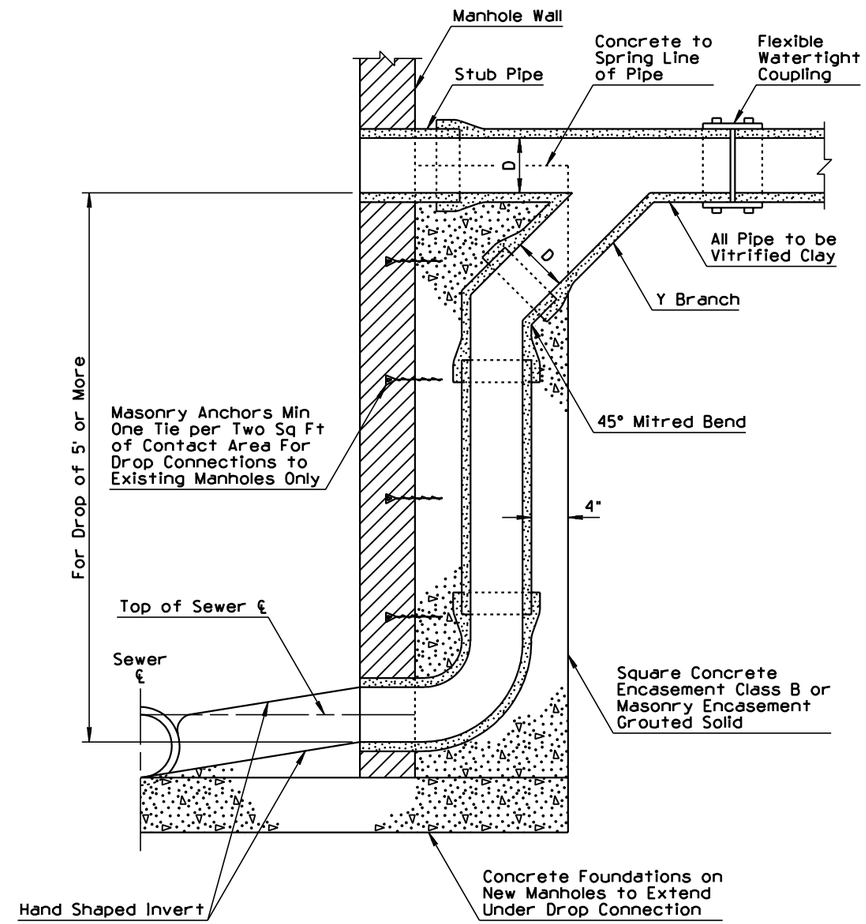

NOTE:
D = Same Diameter Pipe

TYPE B
5' OR MORE DROP

DESIGN APPROVED Terry H. Otterness APPROVED FOR DISTRIBUTION Ronald C. Williams	STATE OF ARIZONA DEPARTMENT OF TRANSPORTATION DIVISION OF HIGHWAYS STANDARD DRAWINGS	REV. 7/94
	1 DROP SEWER CONNECTIONS	DRAWING NO. C-22.35

NO	DESCRIPTION OF REVISIONS	MADE BY	DATE
1	REISSUE STD	PNB	7/94
2			
3			
4			

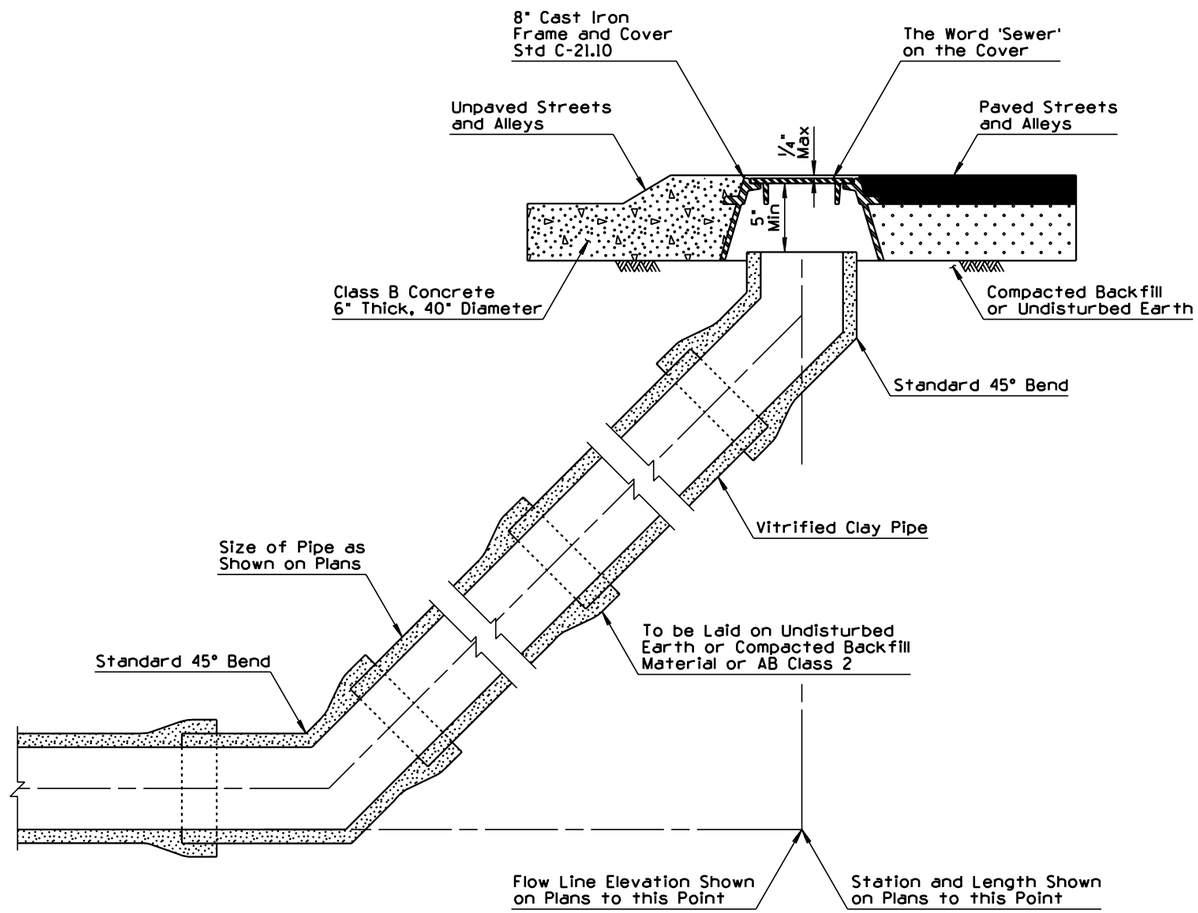

CLEANOUT INSTALLATION

DESIGN APPROVED Terry H. Otterness	STATE OF ARIZONA DEPARTMENT OF TRANSPORTATION DIVISION OF HIGHWAYS STANDARD DRAWINGS	REV. 7/94
APPROVED FOR DISTRIBUTION Ronald C Williams	① SEWER CLEANOUT	DRAWING NO. C-22.40

NO	DESCRIPTION OF REVISIONS	MADE BY	DATE
1	REARRANGED STD	PNB	7/94
2			
3			
4			

GENERAL NOTES

1. Thrust blocks are to extend to undisturbed ground.
2. All concrete shall be class B.
3. Table is based on 3000#/sq. ft. soil. If conditions are found to indicate soil bearing less, the areas shall be increased accordingly.
4. Areas for pipe larger than 16" shall be calculated for each project.
5. Form all non bearing vertical surfaces.

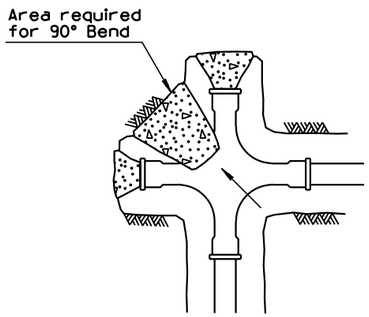

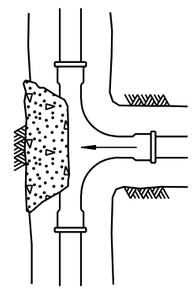

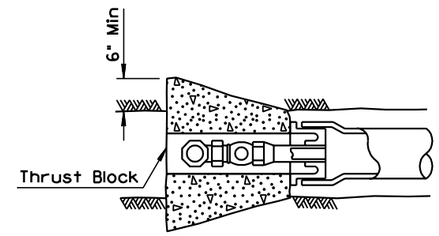

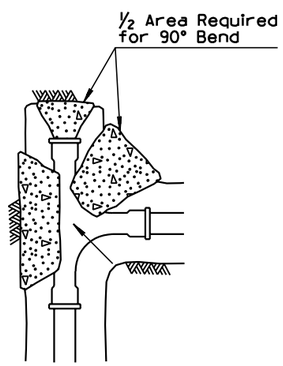

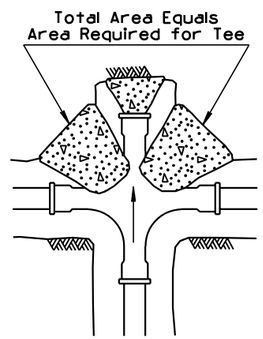

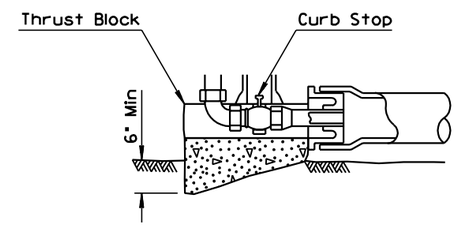

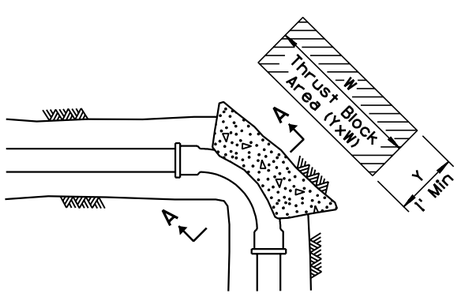

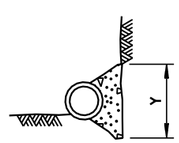

SECTION A-A

MINIMUM THRUST BLOCK AREA REQUIRED (Y x W)		
PIPE SIZE	WATER PIPE	
	TEE, DEAD END, 90° BEND	45° & 22½° BENDS
4" & LESS	3 SQ. FEET	3 SQ. FEET
6"	4 " "	3 " "
8"	6 " "	3 " "
10"	9 " "	5 " "
12"	13 " "	7 " "
16"	23 " "	12 " "

DESIGN APPROVED	STATE OF ARIZONA DEPARTMENT OF TRANSPORTATION DIVISION OF HIGHWAYS STANDARD DRAWINGS	REV. 7/94
APPROVED FOR DISTRIBUTION	1 THRUST BLOCKS FOR WATER LINES	DRAWING NO. C-23.10

NO	DESCRIPTION OF REVISIONS	MADE BY	DATE
1	REARRANGED STD	PNB	7/94
2			
3			
4			

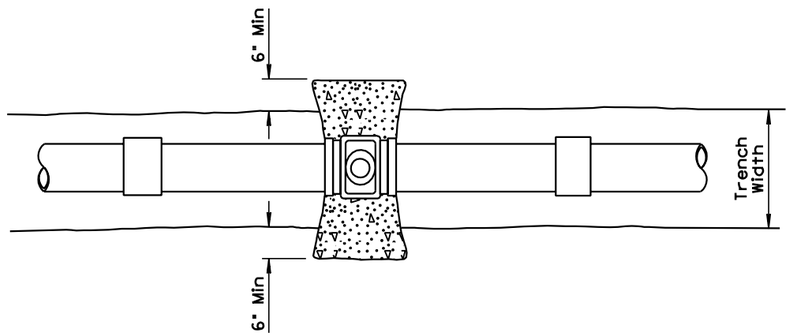

PLAN

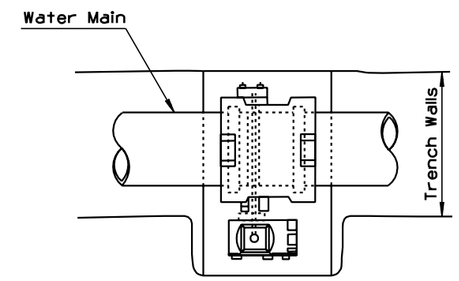

PLAN

GENERAL NOTES

1. Gate valves 4" to 16" may be used with any type of pipe.
2. Gate valves larger than 16" to be detailed on plans.
3. Butterfly valves 3" to 12" may be used with any type of pipe.
4. Butterfly valves larger than 12" to be detailed on plans.
5. Valve box and cover required per Std C-23.30.

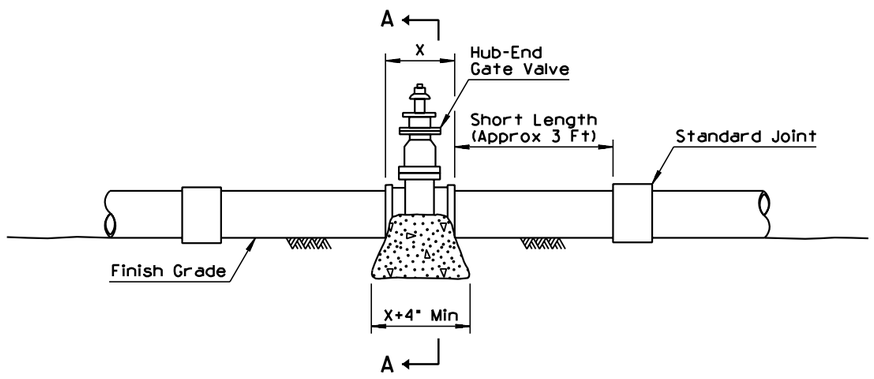

ELEVATION

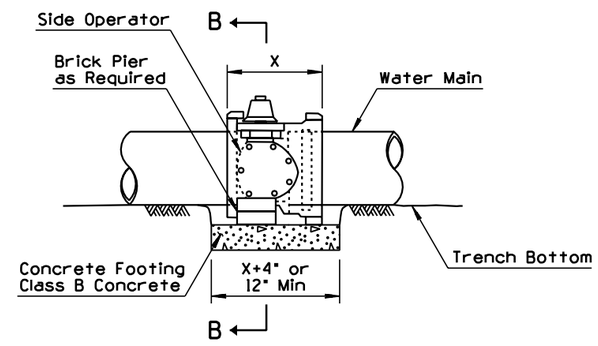

ELEVATION

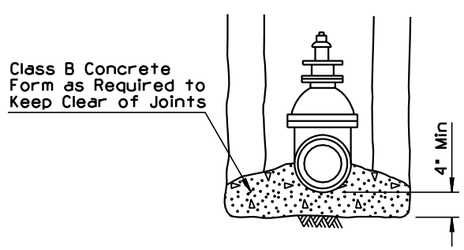

SECTION A-A
GATE VALVE

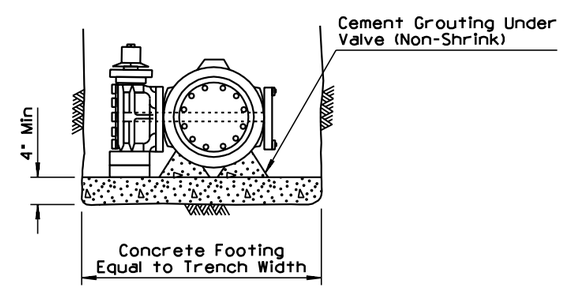

SECTION B-B
BUTTERFLY VALVE

DESIGN APPROVED Terry H. Otteness	STATE OF ARIZONA DEPARTMENT OF TRANSPORTATION DIVISION OF HIGHWAYS STANDARD DRAWINGS	REV. 7/94
APPROVED FOR DISTRIBUTION Ronald C. Williams	① BLOCKING FOR WATER VALVES GATE AND BUTTERFLY	DRAWING NO. C-23.15

NO	DESCRIPTION OF REVISIONS	MADE BY	DATE
1	REARRANGED STD	PNB	7/94
2			
3			
4			

GENERAL NOTES

1. Either this detail or restraint rods may be used when allowed to relocate a water line upward to cross over a conflict.
2. Ductile iron pipe may be used.
3. Anchor blocks for pipe larger than 12" shall be calculated for each project.
4. Reinforcing bars to be coated with 2 coats of coal tar, epoxy, or by other approved methods.

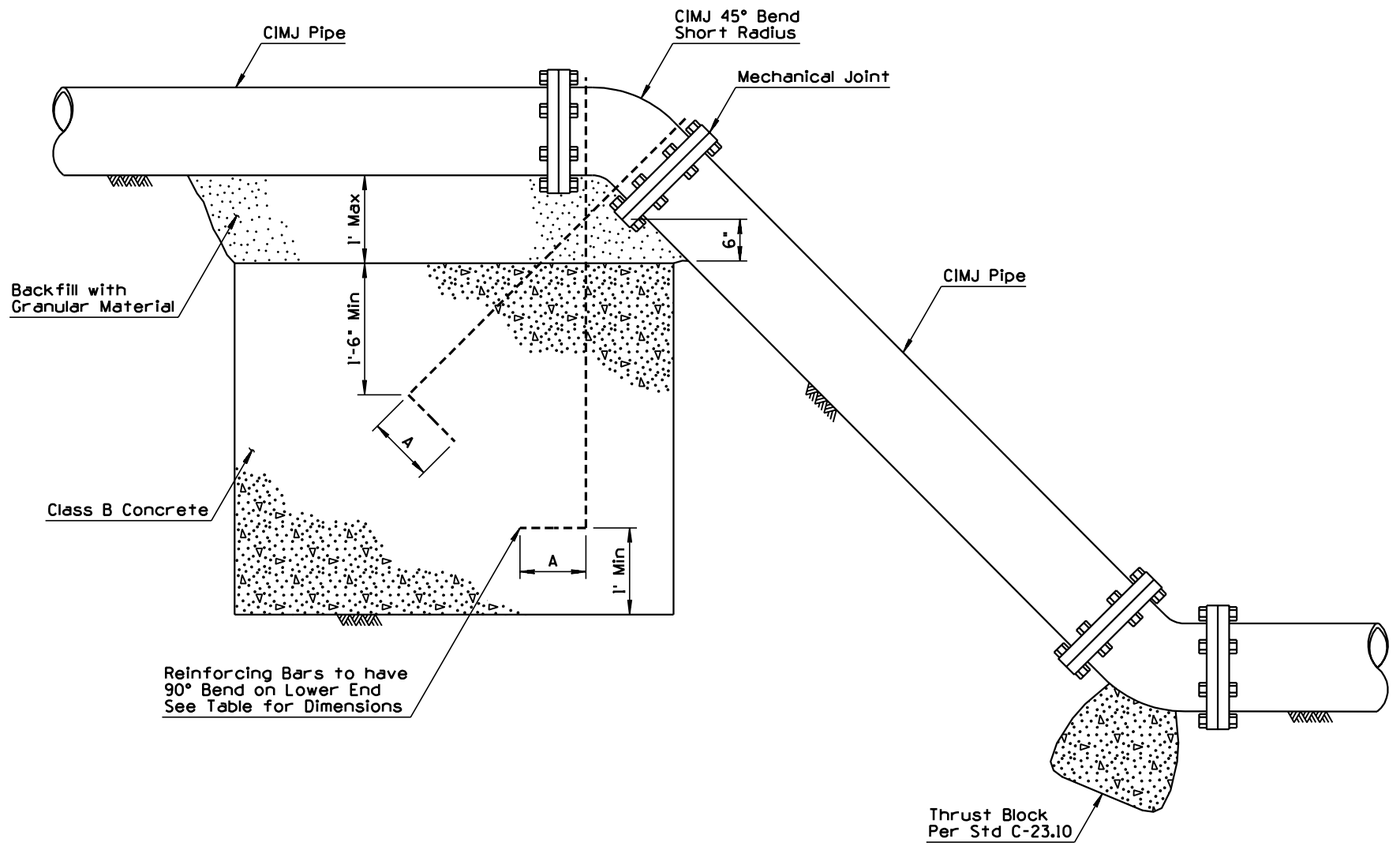

PIPE SIZE	MINIMUM BAR SIZE	A-DIMENSION (HOOK)	MINIMUM * BLOCK DIMENSION
6"	#6	6"	3'x3'x3'
8"	#6	9"	4'x4'x2.5'
12"	#8	9"	4'x5'x5'

* For 125 psi Working Pressure

DESIGN APPROVED Terry H. Otterness	STATE OF ARIZONA DEPARTMENT OF TRANSPORTATION DIVISION OF HIGHWAYS STANDARD DRAWINGS	REV. 7/94
APPROVED FOR DISTRIBUTION Ronald C Williams	① ANCHOR BLOCK FOR VERTICAL BENDS	DRAWING NO. C-23.20

NO	DESCRIPTION OF REVISIONS	MADE BY	DATE
1	REARRANGED STD	PNB	7/94
2			
3			
4			

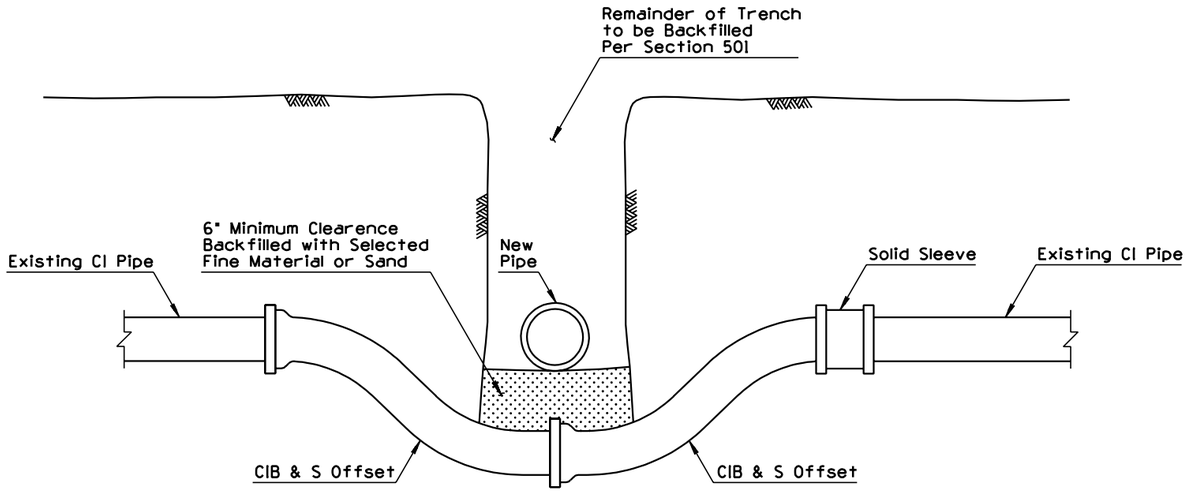

CAST IRON

GENERAL NOTES

1. This detail covers moving of water mains, 2" to 12" only.
2. Thrust blocking per Std C-23.10 and C-23.20.
3. If offset is to go over obstruction, joint restraints must be used.
4. Pipe is to be cast iron or ductile iron.
5. 45° cast iron bends may be used in place of cast iron offsets.
6. Drop section is to be prefabricated and installed as a single unit for cast iron mechanical joints.

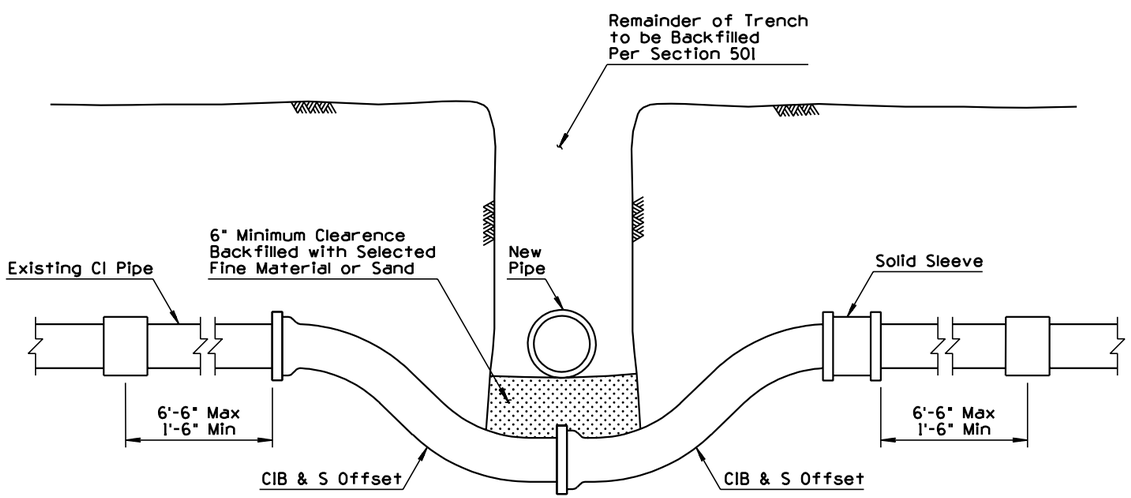

ASBESTOS CEMENT

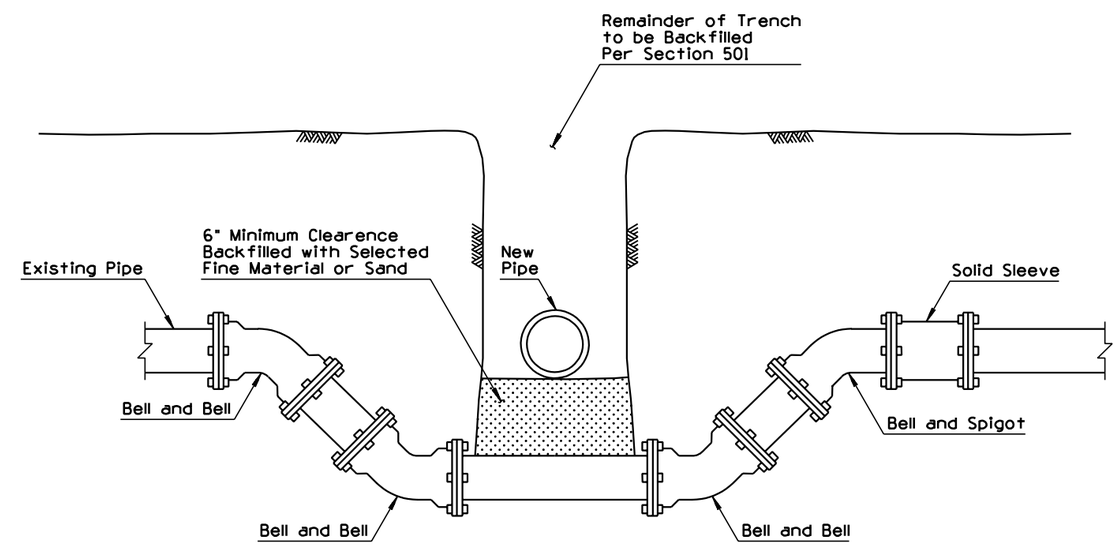

CAST IRON
MECHANICAL JOINT

DESIGN APPROVED Henry H. Otterness	STATE OF ARIZONA DEPARTMENT OF TRANSPORTATION DIVISION OF HIGHWAYS STANDARD DRAWINGS	REV. 7/94
APPROVED FOR DISTRIBUTION Ronald C. Williams	1 VERTICAL REALIGNMENT OF WATER MAINS	DRAWING NO. C-23.25

NO	DESCRIPTION OF REVISIONS	MADE BY	DATE
1	REVISED GENERAL NOTE	PNB	10/95
2			
3			
4			

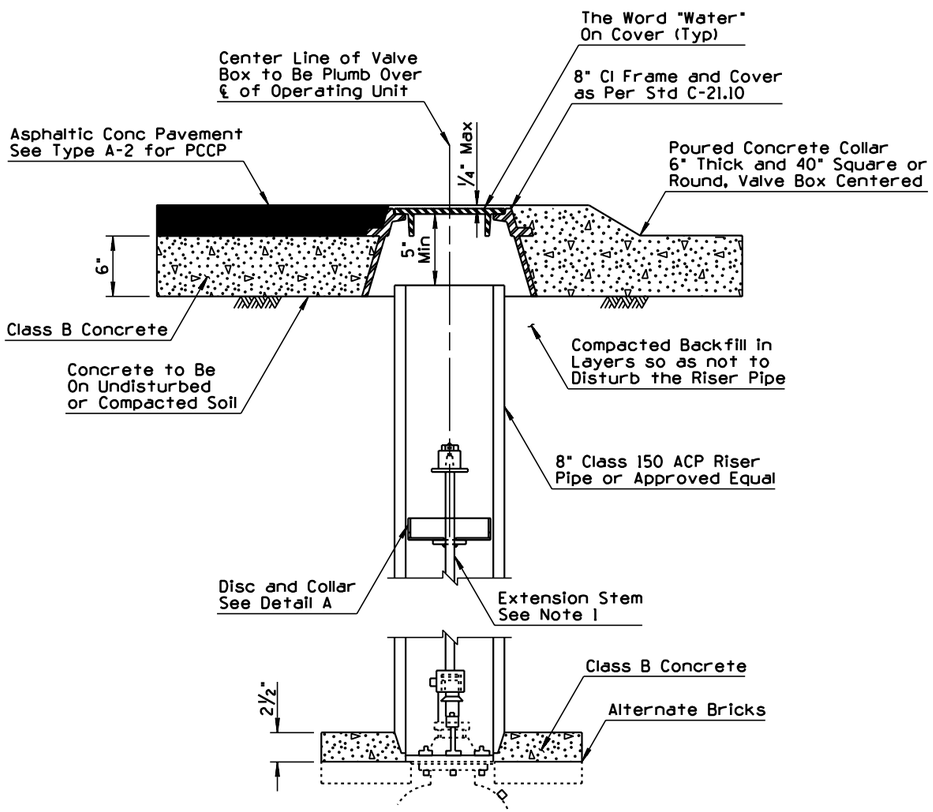

TYPE A-1
TO BE USED IN AREAS SUBJECT TO VEHICULAR TRAFFIC

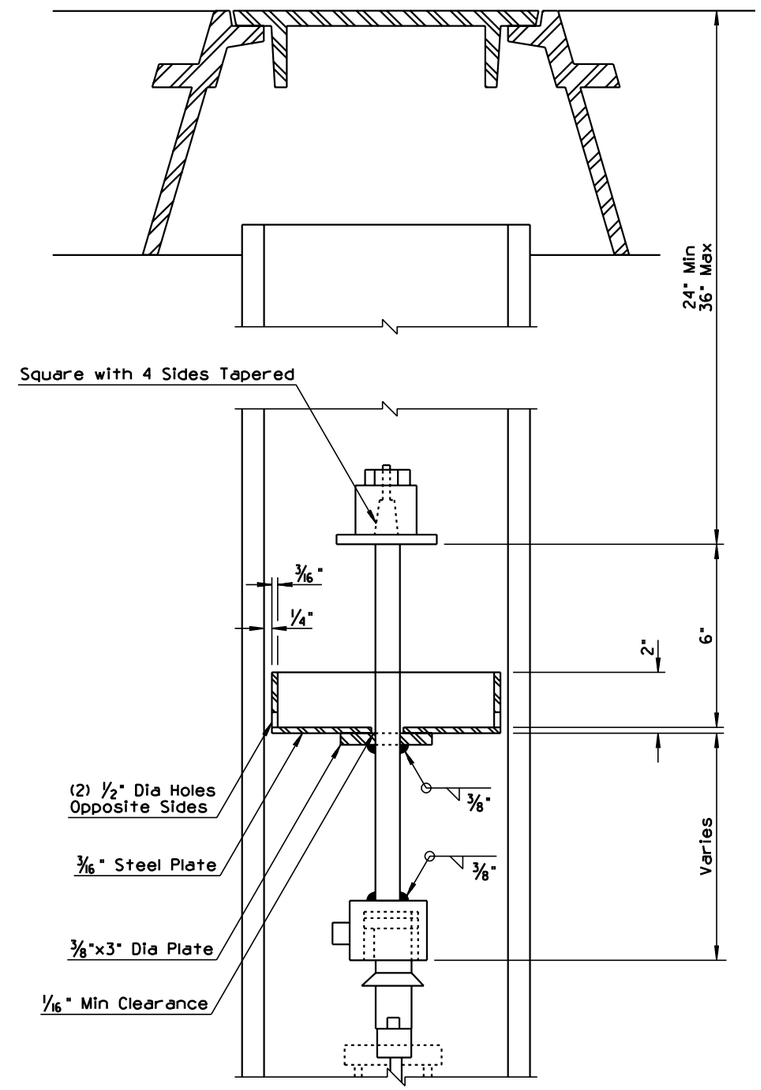

DETAIL A

GENERAL NOTES

1. Extension to valve stems required on all valves where operating nut is over 5' below surface. Extension stem shall be 1 1/4" minimum diameter steel designation A-15, with square socket on bottom to fit 2" square valve nut. Length to fit each installation. 2" square operating nut to be held on top of the extension stem with stop nut.
2. If two or more joints of ACP are used to make riser, use standard AC pipe rubber gasket coupling to join pipe. Where riser pipe length exceeds 10', use 12" AC pipe.
3. (1) All steel to have prime coat of paint No. 4 and one heavy application (finish coat) of Light Grey Enamel paint as per section 1002-4.06.
4. Valve box shall be adjusted to the finished grade prior to the placing of the asphaltic concrete surface or PCCP.
5. Ground below the concrete pad or three bricks to be compacted to 95% of the maximum density.
6. Use Parkson, Tyler Apco, or equal deep skirted cover (4" or more) type, sliding adjustable cast iron valve box, CI minimum TS 30,000 psi.

DESIGN APPROVED Terry H. Otterness	STATE OF ARIZONA DEPARTMENT OF TRANSPORTATION DIVISION OF HIGHWAYS STANDARD DRAWINGS	REV. 10/95
APPROVED FOR DISTRIBUTION Ronald C. Williams	VALVE BOX INSTALLATION	DRAWING NO. C-23.30 Sheet 1 of 2

NO	DESCRIPTION OF REVISIONS	MADE BY	DATE
1	MOVED NOTE TO SHT 1	PNB	7/94
2	REARRANGED STD	PNB	7/94
3			
4			

1

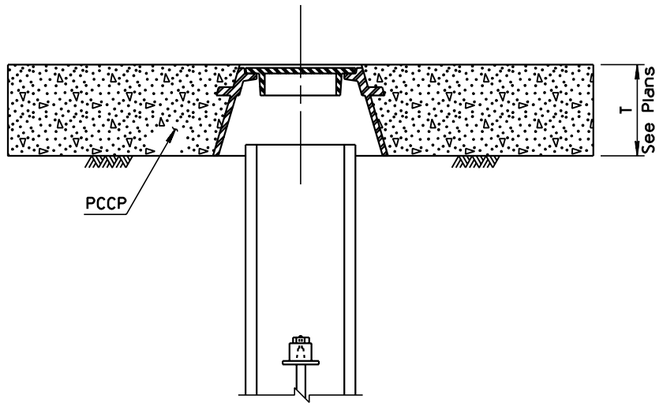

TYPE A-2
TO BE USED WHEN VALVE BOX IS LOCATED WITHIN PCCP PAVEMENT

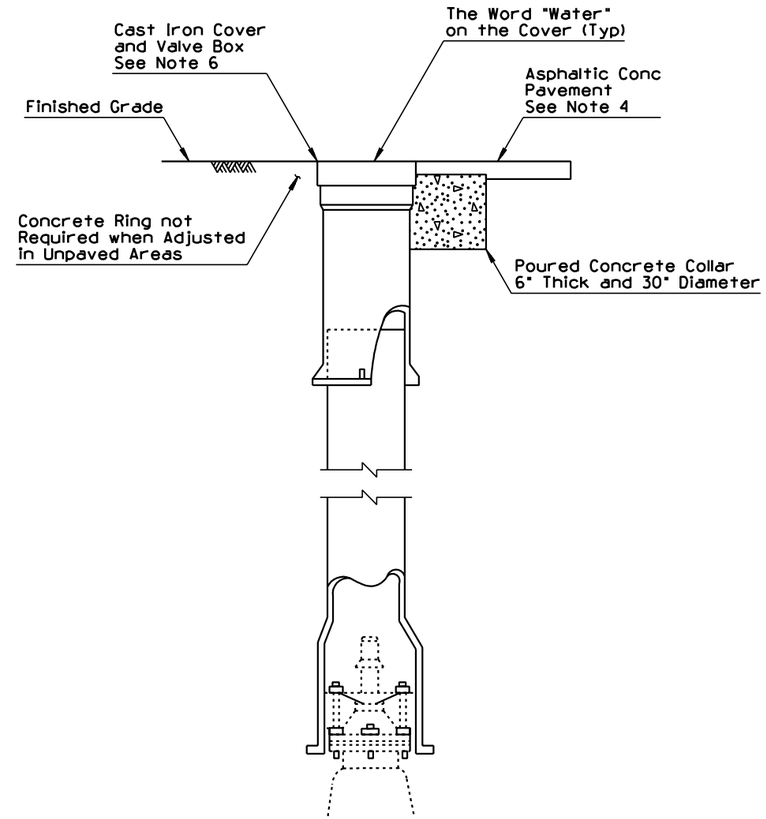

TYPE C

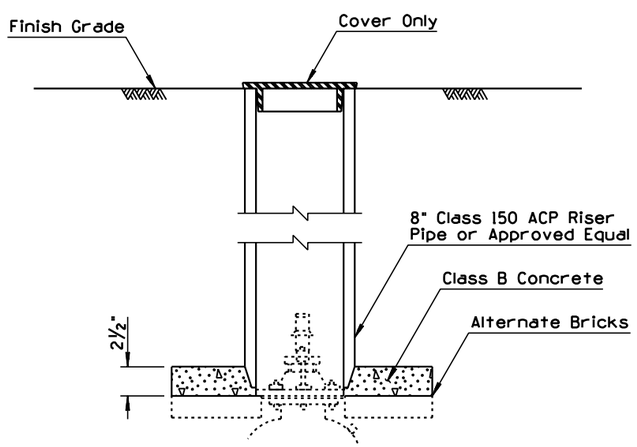

TYPE B
NOT SUBJECT TO VEHICULAR TRAFFIC

DESIGN APPROVED Henry H. Otteman	STATE OF ARIZONA DEPARTMENT OF TRANSPORTATION DIVISION OF HIGHWAYS STANDARD DRAWINGS	REV. 7/94
APPROVED FOR DISTRIBUTION Ronald C. Williams	2 VALVE BOX INSTALLATION	DRAWING NO. C-23.30 Sheet 2 of 2

NO	DESCRIPTION OF REVISIONS	MADE BY	DATE
1	REARRANGED STD. ESP. NOTES	PNB	7/94
2			
3			
4			

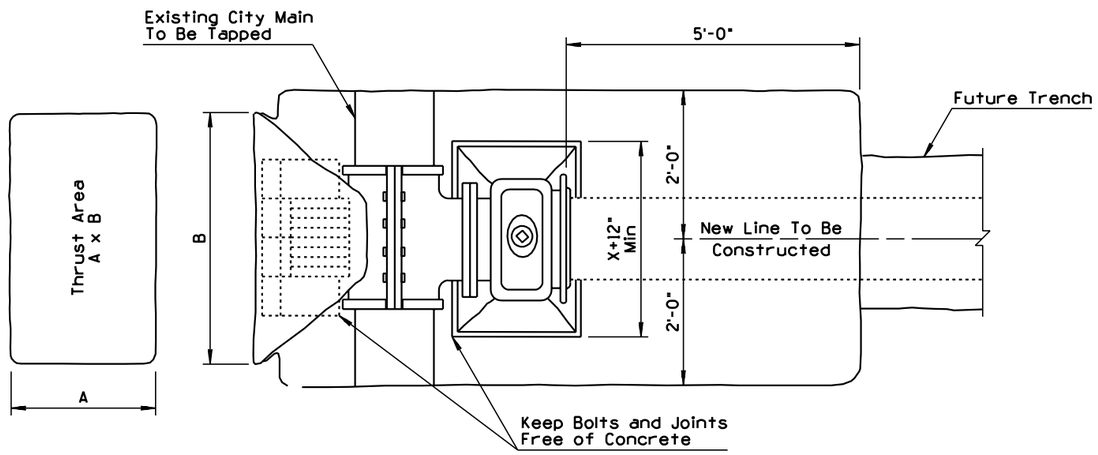

PLAN

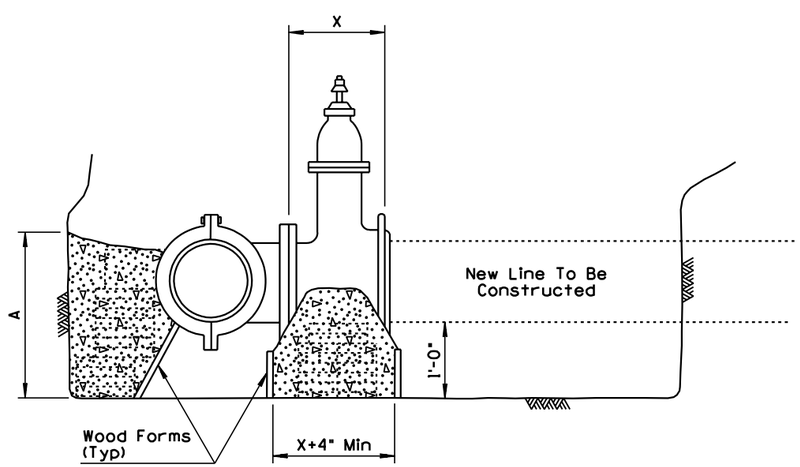

ELEVATION

GENERAL NOTES

1. Thrust blocks are to extend to undisturbed ground.
2. Optional blocking of 2"x8"x12" solid concrete masonry units may be used as indicated.
3. All concrete shall be class B normally, cure 24 hours before backfilling, or use high, early strength concrete.
4. All taps shall be made by city crews at prevailing rates.
5. Install permanent blocking under valve before tap is made. All flange bolts shall be clear of footing.
6. All tapping sleeves must be pressure tested prior to request for tap by city.
7. Contractor shall excavate as shown and shall set tapping sleeve and valve, and tighten all bolts prior to requesting city to make tap.
8. Tapping sleeve to be placed a minimum of 18" from any bell, coupling, valve, or other obstruction.
9. Areas for pipe larger than 16" shall be calculated for each project.

SIZE OF PIPE BEING CONNECTED	MINIMUM THRUST AREA REQUIRED EQUALS (A x B)
4" & LESS	3 SQUARE FEET
6"	4 SQUARE FEET
8"	6 SQUARE FEET
10"	9 SQUARE FEET
12"	13 SQUARE FEET
16"	23 SQUARE FEET

DESIGN APPROVED
Terry H. Otterness

APPROVED FOR DISTRIBUTION
Ronald C. Williams

STATE OF ARIZONA
DEPARTMENT OF TRANSPORTATION
DIVISION OF HIGHWAYS
STANDARD DRAWINGS

REV. 7/94

1 TAPPING SLEEVE AND VALVE INSTALLATION

DRAWING NO. C-23.35

NO	DESCRIPTION OF REVISIONS	MADE BY	DATE
1	REVISED SPECIFICATION CALLOUT	PNB	10/95
2			
3			
4			

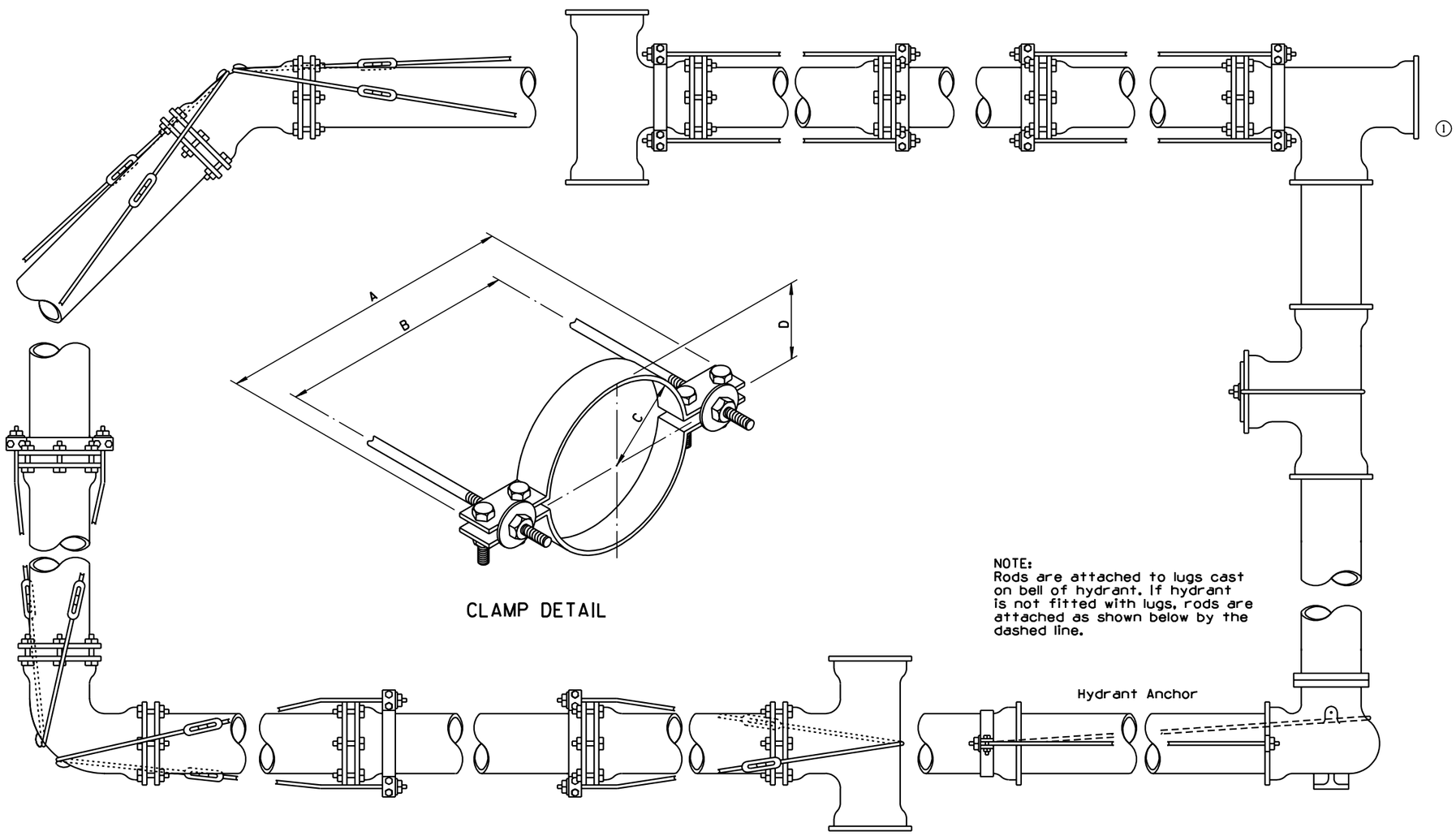

GENERAL NOTES

1. This detail is for use only on underground installations where the use of concrete thrust blocking per Std C-23.10 cannot be used because of obstructions, or requirements of the specifications.
2. Washers may be cast iron or steel, and may be round or square. Holes shall be 1/8 inch larger than the rods.
3. All tie rods, rod couplings, turnbuckles, bolts and nuts for these joints shall be of carbon steel equivelant to ASTM A-307, grade B, with cadmium plating in accordance with ASTM B 766, except that the minimum thickness of the plating shall be .0002 of an inch. Cadmium plated bolts shall have class 2A threads and the nuts, rod couplings and turnbuckles shall have 2B threads.
4. High strength, heat treated cast iron tee-head bolts with hexagon nuts, all in accordance with the strength requirements of AWWA C-111, may be used in lieu of the cadmium plated bolts and nuts.
5. The sketches in this series of figures show acceptable methods of providing anchorage. There is no particular significance to be attached to whether the sketch shows a bell and spigot joint or a standard mechanical joint. The anchoring procedure illustrated applies in most cases to either type of joint. In some cases, dimensions of the particular pipe or hub and space available for working around the particular joint will influence the choice of methods used.
6. In certain assemblies of rod and clamps shown, rods run from a lug on the fitting (or a clamp behind the hub of a bell) to a clamp against a face of a bell. Note that this arrangement anchors only one joint. The stability of the joint where the clamp is against the face of the bell depends on having soil above a relatively long piece of pipe on both sides of the joint. Consequently, if the distance between the first and the second joint is less than 12 feet, the second joint shown shall be anchored by a clamp behind the hub of the bell and rods to a clamp at the face of the next bell.
7. For pipe larger than 12 inch diameter, restraint details shall be submitted for approval prior to installation.
8. All exposed metal shall be coated with asphaltic primer per subsection 907-2.02.
9. Bolt holes in clamps shall be 1/16 inch larger than the bolts.

PIPE SIZE	A	B	C	D	CLAMP	ROD	BOLTS	WASHERS	
								CAST IRON	STEEL
4"	12 1/2"	10 1/8"	2 1/2"	1 3/4"	1/2"×2"	3/4"	5/8"	5/8"×3"	1/2"×3"
6"	14 1/2"	12 1/8"	3 9/16"	2 13/16"	1/2"×2"	3/4"	5/8"	5/8"×3"	1/2"×3"
8"	16 3/4"	14 3/8"	4 3/32"	3 29/32"	5/8"×2 1/2"	3/4"	5/8"	5/8"×3"	1/2"×3"
10"	19 1/16"	16 11/16"	5 3/4"	5"	5/8"×2 1/2"	7/8"	3/4"	5/8"×3"	1/2"×3"
12"	22 5/16"	19 3/16"	6 3/4"	5 7/8"	5/8"×3"	7/8"	7/8"	3/4"×3 1/2"	1/2"×3 1/2"

DESIGN APPROVED Terry H. Otterness	STATE OF ARIZONA DEPARTMENT OF TRANSPORTATION DIVISION OF HIGHWAYS STANDARD DRAWINGS	REV. 10/95
APPROVED FOR DISTRIBUTION Ronald C. Williams	JOINT RESTRAINT WITH TIE RODS	DRAWING NO. C-23.40

NO	DESCRIPTION OF REVISIONS	MADE BY	DATE
1	REARRANGED STD	PNB	7/94
2			
3			
4			

GENERAL NOTES

1. The meter boxes shall conform to the dimensions as shown and shall be made of portland cement concrete poured and tamped (or vibrated) in true forms.
2. Use Class S concrete, f'_c=4000 psi.

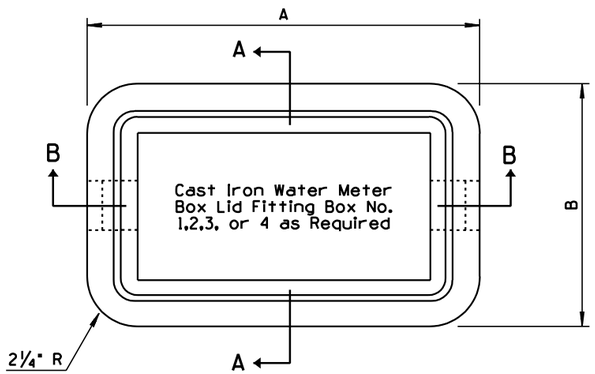

PLAN

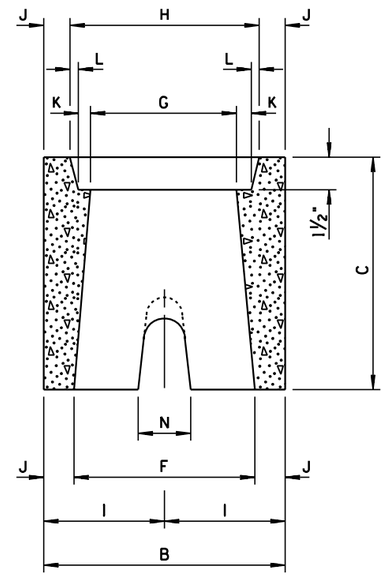

SECTION A-A

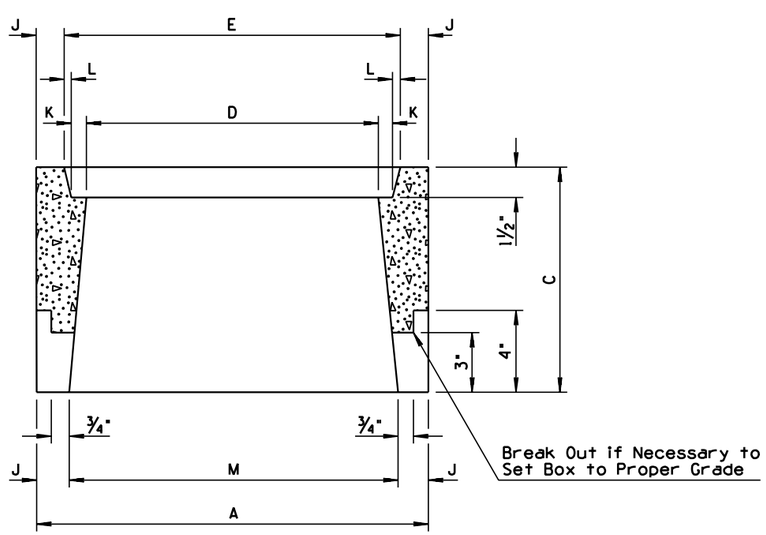

SECTION B-B

METER BOX DIMENSIONS

	BOX NUMBER			
DIM.	1	2	3	4
A	19"	24½"	29½"	33½"
B	12"	16¾"	18½"	22¾"
C	11"	12"	13"	12"
D	14"	19"	23¾"	27¾"
E	16"	22"	26½"	30½"
F	9"	13¼"	15"	19¾"
G	7"	11¼"	12¾"	17"
H	9"	14¼"	15½"	19¾"
I	6"	8⅜"	9¼"	11⅜"
J	1½"	1¾"	1¾"	1½"
K	¾"	1⅛"	1"	1"
L	¼"	⅜"	⅜"	⅜"
M	16"	21"	25½"	30½"
N	2½"	3½"	4"	4"
	⅝" OR ¾" METER	1" METER	1½" METER	2" METER

DESIGN APPROVED
Terry H. Otterness

APPROVED FOR DISTRIBUTION
Ronald C. Williams

STATE OF ARIZONA
DEPARTMENT OF TRANSPORTATION
DIVISION OF HIGHWAYS
STANDARD DRAWINGS

REV. 7/94

1 CONCRETE WATER METER BOX

DRAWING NO. C-23.45

NO	DESCRIPTION OF REVISIONS	MADE BY	DATE
1	REARRANGED STD	PNB	7/94
2			
3			
4			

GENERAL NOTES

1. All steel per section 1004-1 and 1004-2.

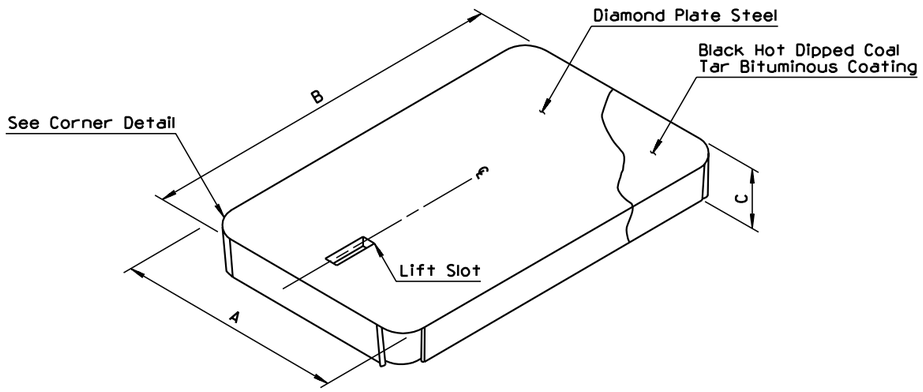

PERSPECTIVE

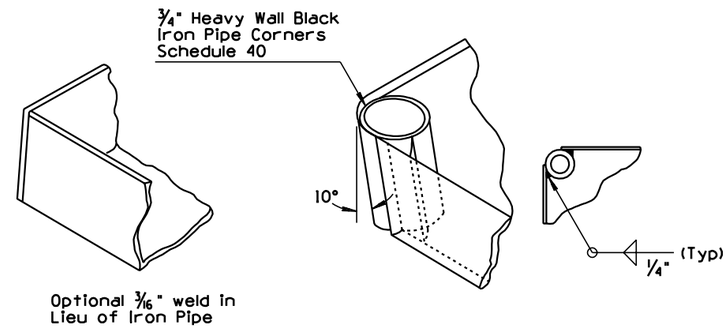

CORNER DETAIL

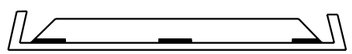

SECTION A-A

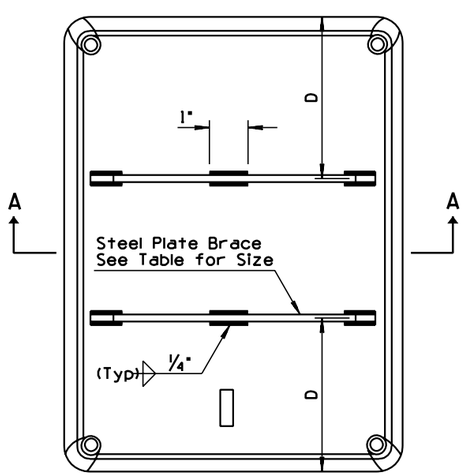

DETAIL 1

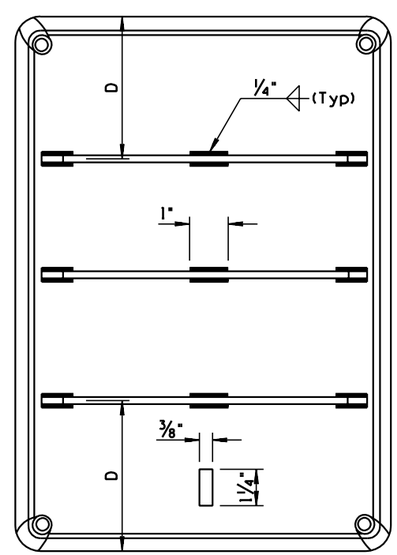

DETAIL 2

SPECIFICATIONS

NO	A	B	C	D	STEEL PLATE BRACE		WEIGHT	MATERIAL
1	9"	15 7/8"	1 3/8"	None	None	None	5 1/4 Lbs	14 Gauge
2	14 1/8"	21 3/4"	1 1/2"	6 1/2"	3/16"×1 1/4"×13 1/8"	Detail 1	12 3/4 Lbs	12 Gauge
3	15 1/4"	26 1/4"	1 1/2"	8 1/4"	3/16"×1 1/4"×14 1/4"	Detail 1	19 1/4 Lbs	12 Gauge
4	19 1/2"	30"	1 1/2"	7 1/8"	3/16"×1 1/4"×18 3/4"	Detail 2	33 Lbs	11 Gauge

DESIGN APPROVED
Henry H. Otterness

APPROVED FOR DISTRIBUTION
Ronald C. Williams

STATE OF ARIZONA
DEPARTMENT OF TRANSPORTATION
DIVISION OF HIGHWAYS
STANDARD DRAWINGS

REV. 7/94

1 STEEL COVER FOR WATER METER BOX

DRAWING NO. C-23.50

NO	DESCRIPTION OF REVISIONS	MADE BY	DATE
1	REMOVED NOTE	PNB	7/94
2			
3			
4			

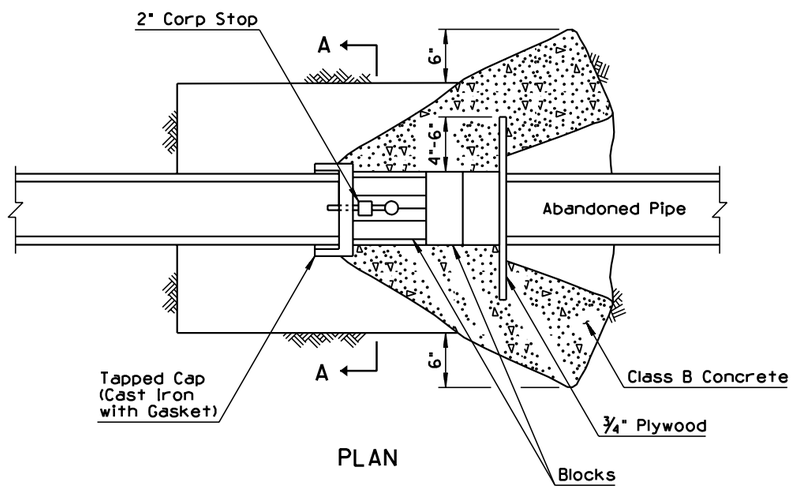

PLAN

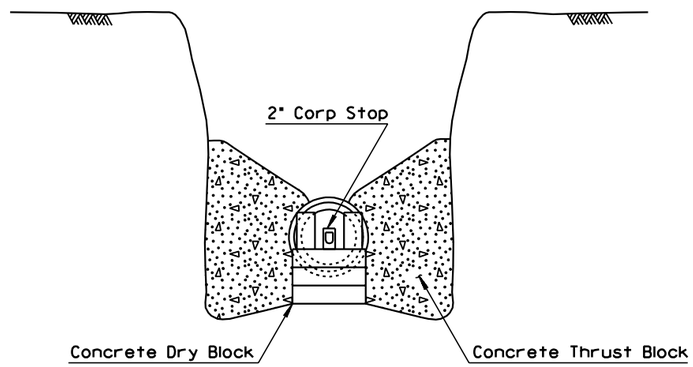

SECTION A-A

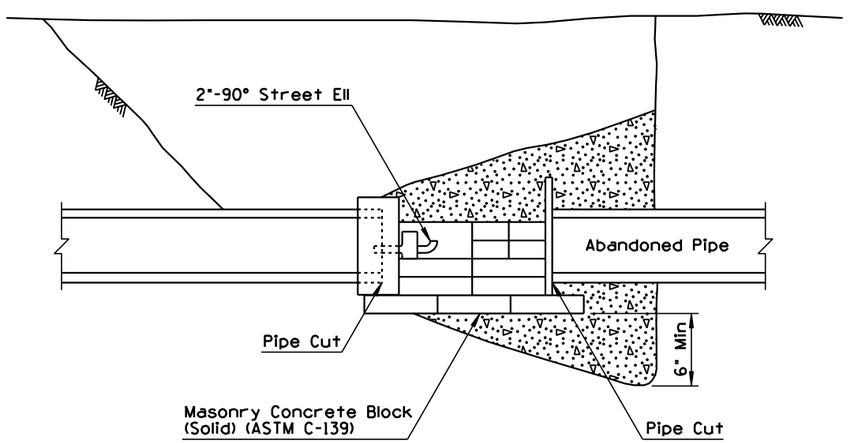

ELEVATION

GENERAL NOTES

1. Cut and plugs must be adequately "dry blocked".
2. Dry blocks shall be standard size solid masonry concrete blocks, (ASTM C-139).
3. The quantity and arrangement of the blocking must withstand the line pressure by holding the cap or plug in position.
4. (1) Concrete thrust blocks shall not be poured untill line pressure is restored and the cap or plug is inspected for leakage.
5. Concrete shall not be poured over any portion of the abandoned pipe.
6. Minimum thrust block area per Std C-23.10.
7. Where a 4" or larger line is specified to be abandoned, the cut and plug should occur at the supply line main to avoid creating an unused deadend line.

DESIGN APPROVED Terry H. Otterness	STATE OF ARIZONA DEPARTMENT OF TRANSPORTATION DIVISION OF HIGHWAYS STANDARD DRAWINGS	REV. 7/94
APPROVED FOR DISTRIBUTION Ronald C Williams	WATERLINE CUT AND PLUG FOR 12" DIAMETER MAIN AND SMALLER	DRAWING NO. C-23.55

NO	DESCRIPTION OF REVISIONS	MADE BY	DATE
1	REARRANGED STD	PNB	7/94
2			
3			
4			

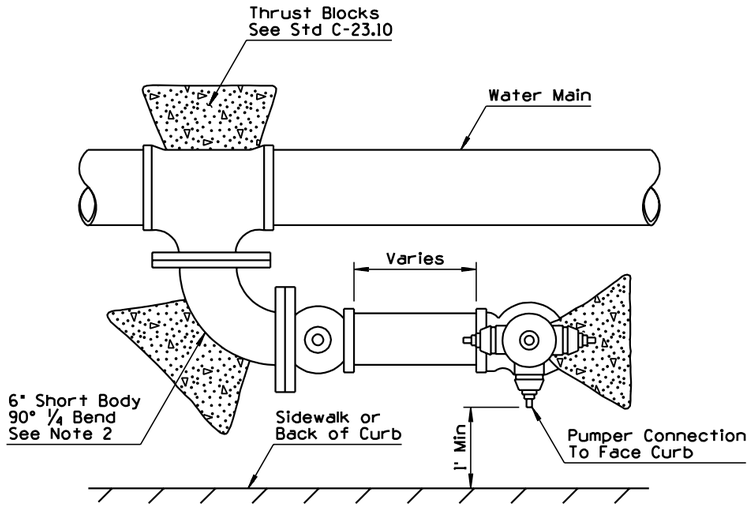

PLAN

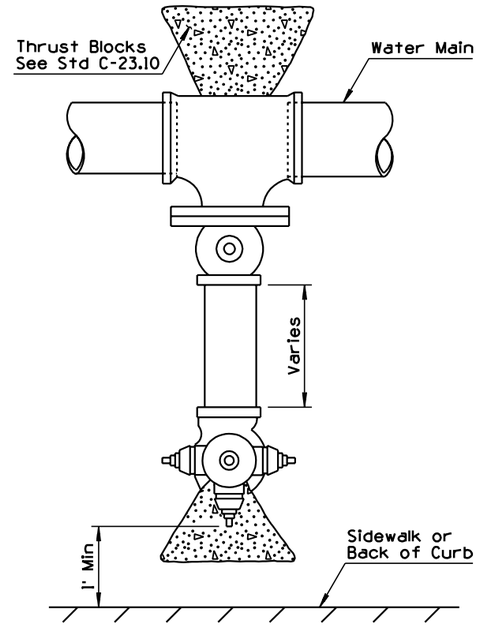

ALTERNATE PLAN
(SEE NOTE 3)

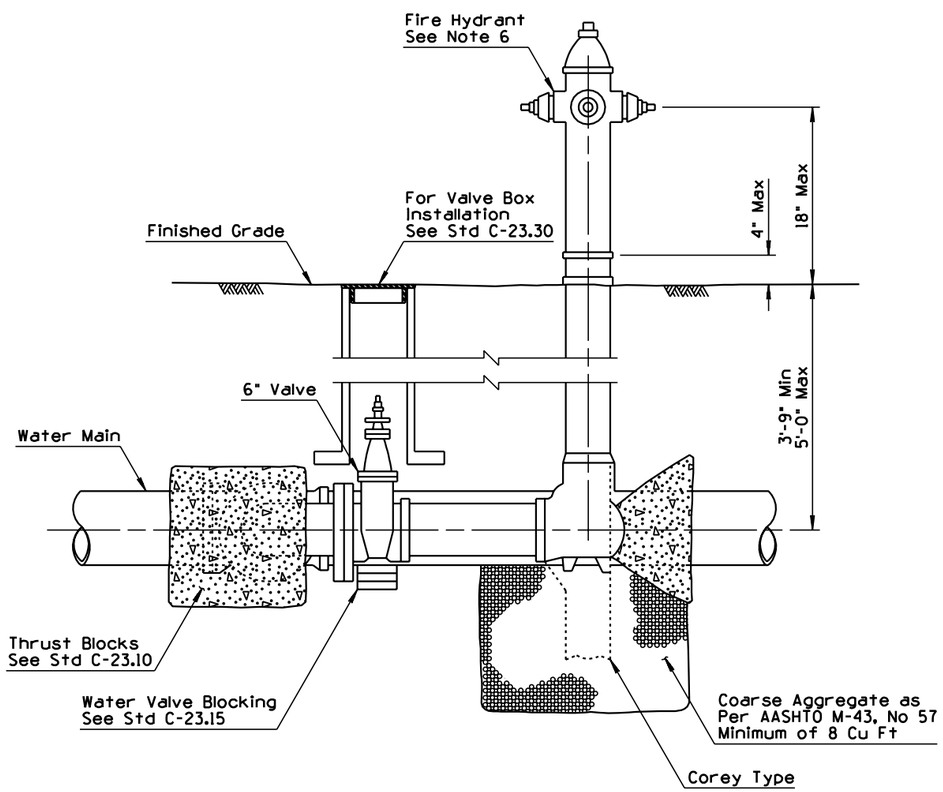

ELEVATION

GENERAL NOTES

1. All joints in hydrant run-out to be mechanical joints.
2. Hydrant Tee: Clow or approved equal may be used in place of Tee and 90° bend.
3. 90° bend not required if sufficient room for perpendicular installation.
4. See Std C-23.10 and C-23.15 for concrete thrust blocks
5. A flange by mechanical joint shutoff valve, connecting directly to the Tee or below at the main shall be used.
6. Fire hydrant, fire hydrant threads, valve and valve boxes per municipality requirements.

DESIGN APPROVED Terry H. Otterness	STATE OF ARIZONA DEPARTMENT OF TRANSPORTATION DIVISION OF HIGHWAYS STANDARD DRAWINGS	REV. 7/94
APPROVED FOR DISTRIBUTION Ronald C. Williams	1 HYDRANT INSTALLATION	DRAWING NO. C-23.60

NO	DESCRIPTION OF REVISIONS	MADE BY	DATE
1	REARRANGED STD	PNB	7/94
2			
3			
4			

GENERAL NOTES

1. Obstructions such as utility poles, street signs, irrigation boxes, fences, etc., must not be placed between curb and hydrant.
2. * Radius varies by municipality.
3. Dimensions shown on plans supersede locations shown on this detail.
4. On locations in midblock, the fire hydrant will be aligned with a property line.

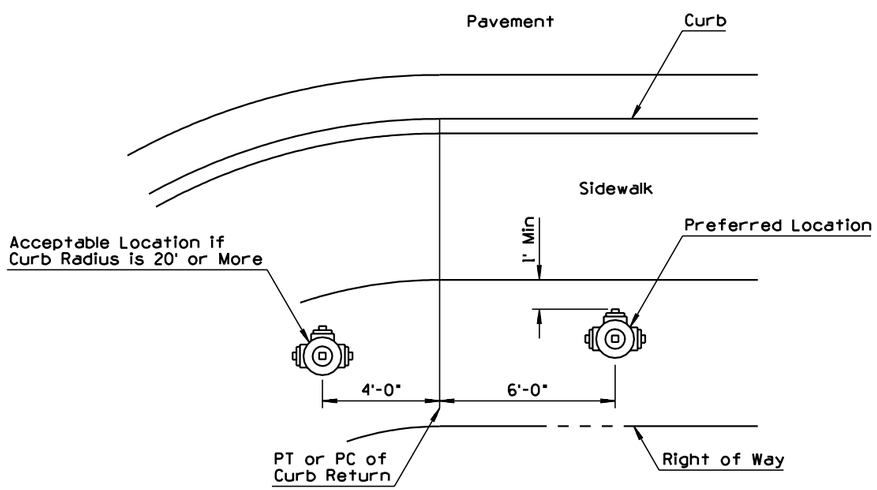

AREA WITH SIDEWALK

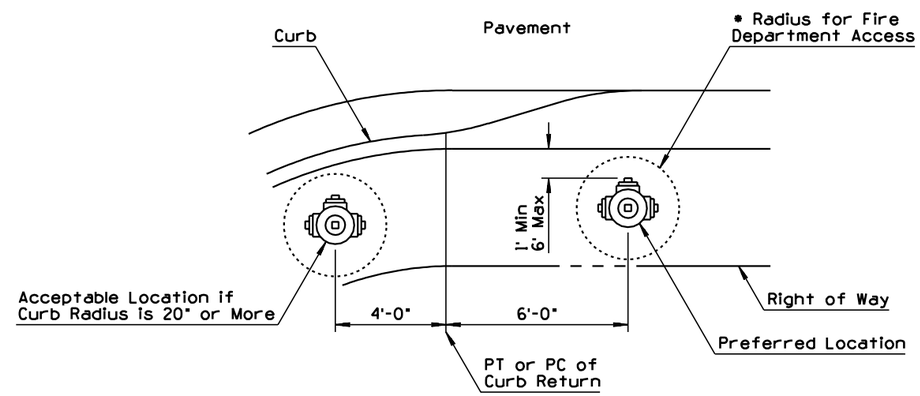

PARKWAY AREA OR NO SIDEWALK

DESIGN APPROVED Terry H. Otterness	STATE OF ARIZONA DEPARTMENT OF TRANSPORTATION DIVISION OF HIGHWAYS STANDARD DRAWINGS	REV. 7/94
APPROVED FOR DISTRIBUTION Ronald C. Williams	1 FIRE HYDRANT LOCATIONS	DRAWING NO. C-23.65