ARIZONA DEPARTMENT OF TRANSPORTATION
ROADWAY ENGINEERING GROUP
OFFICE MEMO

October 13, 1998

TO: All Users of Construction Standards

FROM: Terry H. Otterness, Design Program Manager, Roadway Engineering Group

RE: Revisions to Construction Standards - English Version

Several changes are being made to the Construction Standard Drawings and the Construction Standards Index.

The revised Standards C-05.20, C-05.50, C-06.10, C-07.01 (Sheet 1 of 2), C-07.04, C-07.05, C-07.10, C-10.22, C-10.31 (Sheet 2 of 3), C-10.66, C-13.10, C-13.15, C-13.25, C13.30, C-13.60 contain minor modifications. A new detail for single curb joints and a note on B joints were added to Standard C-07.01 (Sheet 2 of 2). In Standards C-10.21, C-10.30, C-10.31 (Sheet 3 of 3) and C-10.32, steel block was replaced by wood block to comply with NCHRP Report 350 test requirements. Standards C-10.40, C-10.41 and C-10.44 are deleted since we are now utilizing manufacturer's approved drawings for hardware details.

Standard C-10.45, reflects a replacement of concrete footings with steel tubes. In Standard C-10.62, New Jersey barrier was changed to Type F configuration and a lower steel reinforcement was added.

Design Personnel should review the revised drawings and incorporate into their design plans as appropriate. The updated 1A sheet (List of Standards) is available at the Roadway Support Desk 255-8667 or 8671. Also, please support any requests from field to implement changes on current construction projects.

Please distribute to all users within your Group or District. Additional copies may be obtained from ADOT Engineering Records at 255-8216. Questions regarding the Drawings may be directed to Tom Scheck (255-8674), Jeri Kasemsant (255-7735) or me (255-7341).

c:	Roadway Group	Statewide Project Mgmt. Group
	Valley Freeway Group	Traffic Group
	Bridge Group	Contracts & Specifications Section
	Construction Group	Central Maintenance Group
	Local Government Section	Districts (10)
	FHWA	Engineering Consultant Services

8/98

SCANNED 8/02/01

EXTRA

ARIZONA DEPARTMENT OF TRANSPORTATION
ROADWAY ENGINEERING GROUP
OFFICE MEMO

October 13, 1998

TO: All Users of Construction Standards

FROM: Terry H. Otterness, Design Program Manager, Roadway Engineering Group

RE: Revisions to Construction Standards - English Version

Several changes are being made to the Construction Standard Drawings and the Construction Standards Index.

The revised Standards C-05.20, C-05.50, C-06.10, C-07.01 (Sheet 1 of 2), C-07.04, C-07.05, C-07.10, C-10.22, C-10.31 (Sheet 2 of 3), C-10.66, C-13.10, C-13.15, C-13.25, C13.30, C-13.60 contain minor modifications. A new detail for single curb joints and a note on B joints were added to Standard C-07.01 (Sheet 2 of 2). In Standards C-10.21, C-10.30, C-10.31 (Sheet 3 of 3) and C-10.32, steel block was replaced by wood block to comply with NCHRP Report 350 test requirements. Standards C-10.40, C-10.41 and C-10.44 are deleted since we are now utilizing manufacturer's approved drawings for hardware details.

Standard C-10.45, reflects a replacement of concrete footings with steel tubes. In Standard C-10.62, New Jersey barrier was changed to Type F configuration and a lower steel reinforcement was added.

Design Personnel should review the revised drawings and incorporate into their design plans as appropriate. The updated 1A sheet (List of Standards) is available at the Roadway Support Desk 255-8667 or 8671. Also, please support any requests from field to implement changes on current construction projects.

Please distribute to all users within your Group or District. Additional copies may be obtained from ADOT Engineering Records at 255-8216. Questions regarding the Drawings may be directed to Tom Scheck (255-8674), Jeri Kasemsant (255-7735) or me (255-7341).

c:	Roadway Group	Statewide Project Mgmt. Group
	Valley Freeway Group	Traffic Group
	Bridge Group	Contracts & Specifications Section
	Construction Group	Central Maintenance Group
	Local Government Section	Districts (10)
	FHWA	Engineering Consultant Services

CONSTRUCTION STANDARD - INDEX

DRAWING NO.	TITLE
C-01.10	SYMBOL LEGEND
C-01.11	SYMBOL LEGEND
C-01.12	SYMBOL LEGEND
C-01.13	SYMBOL LEGEND
C-01.30	GENERAL ABBREVIATIONS
C-01.31	GENERAL ABBREVIATIONS
C-01.32	GENERAL ABBREVIATIONS
C-02.10	SLOPES, INTERSTATE
C-02.20	SLOPES, PRIMARY ROADWAYS
C-02.30	SLOPES, SECONDARY/MISC ROADWAYS
C-02.50	SUPERELEVATION DISTRIBUTION
C-03.10	DITCHES, CHANNELS, DIKES AND BERMS (5 SHEETS)
C-04.10	SPILLWAY, EMBANKMENT
C-04.20	DOWNDRAIN, EMBANKMENT
C-04.30	SPILLWAY LENGTH TABLE
C-04.40	DOWNDRAIN LENGTH TABLE
C-04.50	DOWNDRAIN ENERGY DISSIPATOR
C-05.10	SINGLE CURB, CURB & GUTTER EMBANKMENT CURB
C-05.11	RAMP CURB & GUTTER LAYOUT (2 SHEETS)
C-05.12	CURB & GUTTER TRANSITIONS (3 SHEETS)
C-05.20	CONCRETE DRIVEWAYS & SIDEWALKS (2 SHEETS)
C-05.30	SIDEWALK RAMP (4 SHEETS)
C-05.40	MEDIAN PAVING AND NOSE TRANSITION
C-05.50	CONCRETE BUS BAY
C-06.10	DRIVEWAY & TURNOUT LAYOUTS (2 SHEETS)
C-07.01	PCCP JOINTS (2 SHEETS)
C-07.02	LOAD TRANSFER DOWEL ASSEMBLY
C-07.03	MAINLINE PCCP JOINT LOCATIONS (8 SHEETS)
C-07.04	ENTRANCE RAMP PCCP JOINTS
C-07.05	EXIT RAMP PCCP JOINTS
C-07.06	TRENCH BACKFILL AND PAVEMENT REPLACEMENT
C-07.10	CROSSROAD PCCP JOINTS
C-08.10	RAMP GEOMETRICS
C-08.20	PAVED GORE AREA
C-09.10	GROOVING FOR BITUMINOUS SHOULDERS

DRAWING NO.	TITLE
C-10.01	TYPE A GUARD RAIL INSTALLATION, REFLECTOR TAB
C-10.02	TYPE B GUARD RAIL INSTALLATION, REFLECTOR TAB
C-10.03	MEASUREMENT LIMITS FOR W BEAM AND THRIE BEAM SYSTEM (2 SHEETS)
C-10.06	HALF BARRIER TERMINAL W/TYPE B OR C CURB & GUTTER
C-10.15	BARRIER DETAILS AT PIERS
C-10.20	G4(1W) AND G4(2W) BLOCKED OUT W BEAM (TIMBER POST)
C-10.21	G4(1S) AND G4(2S) BLOCKED OUT W BEAM (STEEL POST)
C-10.22	G4(MODIFIED) BLOCKED OUT W BEAM WITH SPECIAL CURB AND GUTTER (2 SHEETS)
C-10.23	G9(A) AND G9(B) BLOCKED OUT THRIE BEAM (STEEL POST)
C-10.24	G9(C) BLOCKED OUT THRIE BEAM (STEEL POST)
C-10.28	NESTED STEEL W BEAM (2 SHEETS)
C-10.29	BOLTED ANCHOR GUARD RAIL (2 SHEETS)
C-10.30	GUARD RAIL TRANSITION, W BEAM TO CONCRETE HALF BARRIER (APPROACH) (3 SHEETS)
C-10.31	GUARD RAIL TRANSITION, W BEAM TO CONCRETE HALF BARRIER (APPROACH) (WITH CURB) (3 SHEETS)
C-10.32	GUARD RAIL TRANSITION, W BEAM TO CONCRETE HALF BARRIER (DEPARTURE) (3 SHEETS)
C-10.39	HARDWARE FOR W BEAM TRANSITION TO CONCRETE BARRIER
C-10.45	GUARD RAIL ANCHOR ASSEMBLY STEEL TERMINAL POST
C-10.60	HALF BARRIER, CAST IN PLACE, SLIP FORM & FIXED FORM
C-10.61	HALF BARRIER, PRECAST
C-10.62	CONCRETE HALF BARRIER WITH GUTTER
C-10.64	HALF BARRIER (AT PIERS) (2 SHEETS)
C-10.65	HALF BARRIER WITH SIDEWALK
C-10.66	MEDIAN BARRIER, CAST IN PLACE, SLIP FORM & FIXED FORM
C-10.67	CONCRETE MEDIAN BARRIER, TALL TYPE 'F', CAST IN PLACE
C-10.68	MEDIAN BARRIER, PRECAST
C-10.70	CONCRETE HALF BARRIER TRANSITION (4 SHEETS)
C-10.71	CONCRETE HALF BARRIER TRANSITION (3 SHEETS)
C-10.74	HARDWARE FOR CONCRETE BARRIER TRANSITIONS
C-10.75	BARRIER TRANSITION-TANGENT-DEPARTURE TYPES 1, 2, AND 3 (3 SHEETS)
C-10.76	BARRIER TRANSITION-CURVE
C-10.80	RUB RAIL (2 SHEETS)
C-10.83	HARDWARE FOR RUB RAIL
C-10.97	GLARE SCREEN, CONCRETE MEDIAN BARRIER (3 SHEETS)
C-11.10	ROADWAY CATTLE GUARD (3 SHEETS)
C-11.20	CATTLE GUARD, DRAINAGE
C-11.30	CATTLE GUARD, RAILROAD
C-12.10	FENCE, WOVEN AND BARBED WIRE WITH GATES (5 SHEETS)
C-12.20	FENCE, CHAIN LINK TYPES 1 AND 2 WITH GATES (3 SHEETS)
C-12.30	CHAIN LINK CABLE BARRIER (3 SHEETS)

CONSTRUCTION STANDARD - INDEX

DRAWING NO.	TITLE
C-13.10	PIPE CULVERT INSTALLATION (2 SHEETS)
C-13.15	TYPICAL PIPE INSTALLATION
C-13.20	PIPE, REINFORCED CONCRETE END SECTION
C-13.25	PIPE, CORRUGATED METAL, END SECTION
C-13.30	PIPE & PIPE ARCH, CORRUGATED METAL CONCRETE INVERT PAVING
C-13.55	PIPE, CATTLE-VEHICLE PASS, MITERED END TREATMENT
C-13.60	SLOTTED DRAIN DETAILS
C-13.65	SLOTTED DRAIN INSTALLATION DETAILS
C-13.70	STORM DRAIN CONNECTION DETAILS
C-13.75	STORM DRAIN OUTLET DETAILS (2 SHEETS)
C-13.80	PIPE COLLAR DETAILS
C-15.10	CATCH BASIN, TYPE 1
C-15.20	CATCH BASIN, TYPE 3 (2 SHEETS)
C-15.30	CATCH BASIN, TYPE 4
C-15.40	CATCH BASIN, TYPE 5 (2 SHEETS)
C-15.50	CATCH BASIN, GRATES
C-15.65	CATCH BASIN ACCESS, FRAME AND COVER DETAILS
C-15.70	CATCH BASIN MISC. DETAILS (2 SHEETS)
C-15.75	CATCH BASIN, DROP INLET
C-15.80	CATCH BASIN, MEDIAN FLUSH
C-15.81	CATCH BASIN, MEDIAN, SIDE SLOPE
C-15.90	CATCH BASIN, MEDIAN DIKE, PRECAST
C-15.91	FREEWAY CATCH BASIN DETAILS (2 SHEETS)
C-15.92	SPECIAL CATCH BASIN WITH HALF BARRIER
C-16.10	IRRIGATION HEADWALLS 18" TO 60" DIAMETER PIPES
C-16.20	IRRIGATION STANDPIPES
C-16.30	IRRIGATION VALVE AND GATE
C-16.40	IRRIGATION SLEEVES
C-17.10	BANK PROTECTION, RAIL TYPES 1, 2 & 3
C-17.20	BANK PROTECTION, RAIL TYPES 4, 5 & 6

DRAWING NO.	TITLE
C-18.10	MANHOLE DETAILS
C-18.20	MANHOLE FRAME & COVER DETAILS
C-18.30	MISCELLANEOUS MANHOLE DETAILS
C-18.40	MANHOLE RISER DETAILS
C-19.10	FORD - CONCRETE WALLS
C-19.20	FORDS - TYPES 1 & 2
C-21.10	SURVEY MONUMENT, FRAME AND COVER, RIGHT OF WAY MARKER
C-21.20	STANDARD MARKER
C-22.10	UTILITY LINE, PROTECTIVE CONCRETE SLAB
C-22.15	SANITARY SEWER ENCASEMENT
C-22.20	PIPE SUPPORT ACROSS TRENCHES (3 SHEETS)
C-22.25	PRECAST SANITARY SEWER MANHOLES
C-22.30	STUB OUT AND PLUG
C-22.35	DROP SEWER CONNECTIONS
C-22.40	SEWER CLEANOUT
C-23.10	THRUST BLOCKS FOR WATER LINES
C-23.15	BLOCKING FOR WATER VALVES GATE AND BUTTERFLY
C-23.20	ANCHOR BLOCK FOR VERTICAL BENDS
C-23.25	VERTICAL REALIGNMENT FOR WATER MAINS
C-23.30	VALVE BOX INSTALLATION (2 SHEETS)
C-23.35	TAPPING SLEEVE AND VALVE INSTALLATION
C-23.40	JOINT RESTRAINT WITH TIE RODS
C-23.45	CONCRETE WATER METER BOX
C-23.50	STEEL COVER FOR WATER METER BOX
C-23.55	WATERLINE-CUT AND PLUG 12" DIA. MAIN AND SMALLER
C-23.60	HYDRANT INSTALLATION
C-23.65	FIRE HYDRANT LOCATIONS

NO.	DESCRIPTION OF REVISIONS	MADE BY	DATE
1	REVISED NOTE	PNB	7/94
2	REVISED SECTION	PNB	7/94
3	REVISED DETAIL	PNB	7/94
4	ADDED NOTE	PNB	7/94
5	ALTERED EXPANSION JOINT PLACEMENT AND NOTE	BAF	7/97
6			
7			
8			

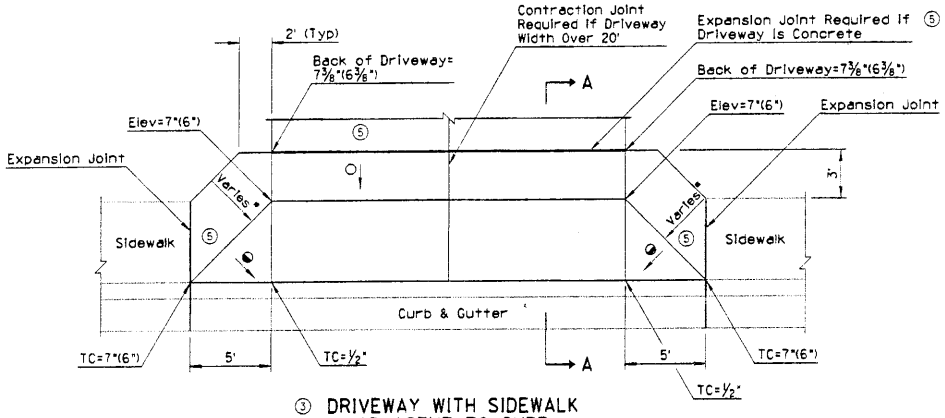

③ DRIVEWAY WITH SIDEWALK ADJACENT TO CURB

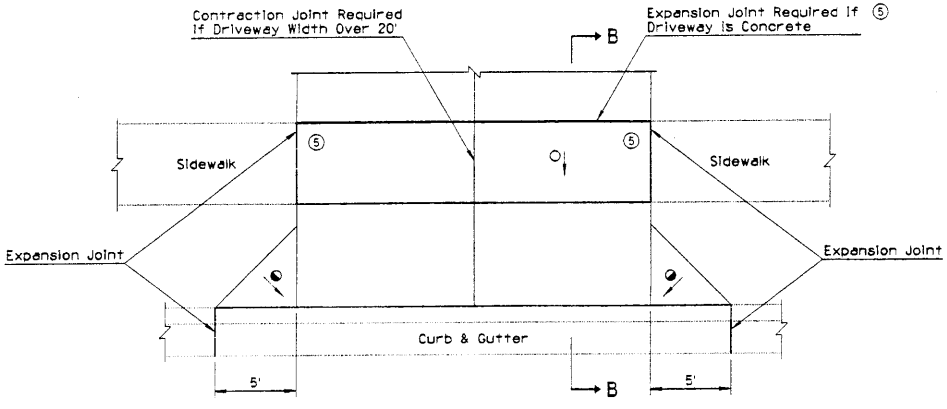

DRIVEWAY WITH SIDEWALK SETBACK

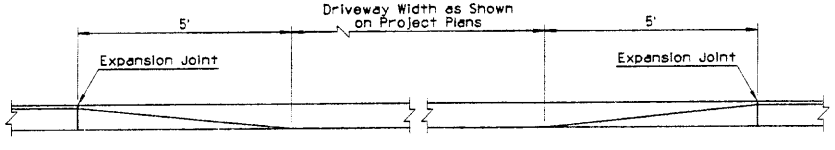

DEPRESSED CURB AT DRIVEWAY ENTRANCE

GENERAL NOTES

1. Unless otherwise specified, driveways shall be 6 inches in depth.

① 2. Two inch deep transverse contraction joints shall be placed in driveways if the driveway width is over 20 feet. If the driveway thickness is greater than 6 inches, then the contraction joint depth shall be T/3, where T is the thickness of the driveway. Joints shall be either formed or sawed. Formed joints shall be finished with a tool having a ¼" radius. See sheet 2 of 2 for the Contraction Joint Detail.

① 3. Expansion joints shall be located between driveways and sidewalks and all abutting structures. The one-half inch joint filler shall extend the full depth of the concrete. See sheet 2 of 2 for the Expansion Joint Detail.

4. Concrete shall be finished by means of a float, then steel troweled and then broomed with a fine brush in a transverse direction.

④ 5. Top of curb (TC) and driveway elevations shown are in relation to the gutter. Gutter=0".

④ 6. When curb heights of 6" or less are shown on plans, use dimensions shown in ( )'s.

④ 7. When curb heights of 7" or more are shown on plans, see plans.

LEGEND

○ Cross slope (0.01' Per Ft (Typ))*

◐ Straight grade with downward slope.

* Maximum slope = 0.02' Per Ft.

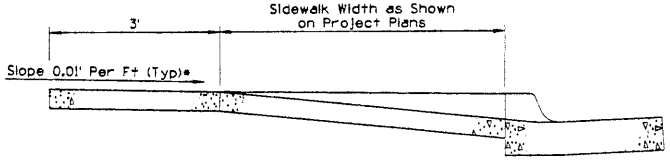

② SECTION A-A

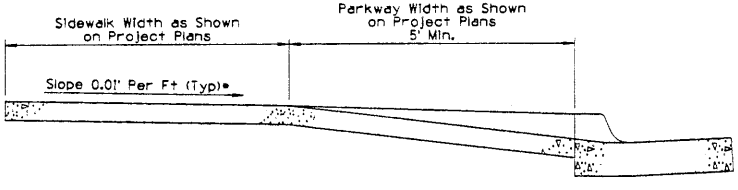

② SECTION B-B

DESIGN APPROVED	STATE OF ARIZONA DEPARTMENT OF TRANSPORTATION DIVISION OF HIGHWAYS STANDARD DRAWINGS	REV. 8/98
APPROVED FOR DISTRIBUTION	CONCRETE DRIVEWAYS & SIDEWALKS DRIVEWAYS	DRAWING NO. C-05.20 Sheet 1 of 2

NO	DESCRIPTION OF REVISIONS	MADE BY	DATE
1	CHANGED REFERENCE FROM NOTE 4 TO NOTE 5	PMR	10/95
2	MODIFIED NOTE	BAF	7/97
3			
4			

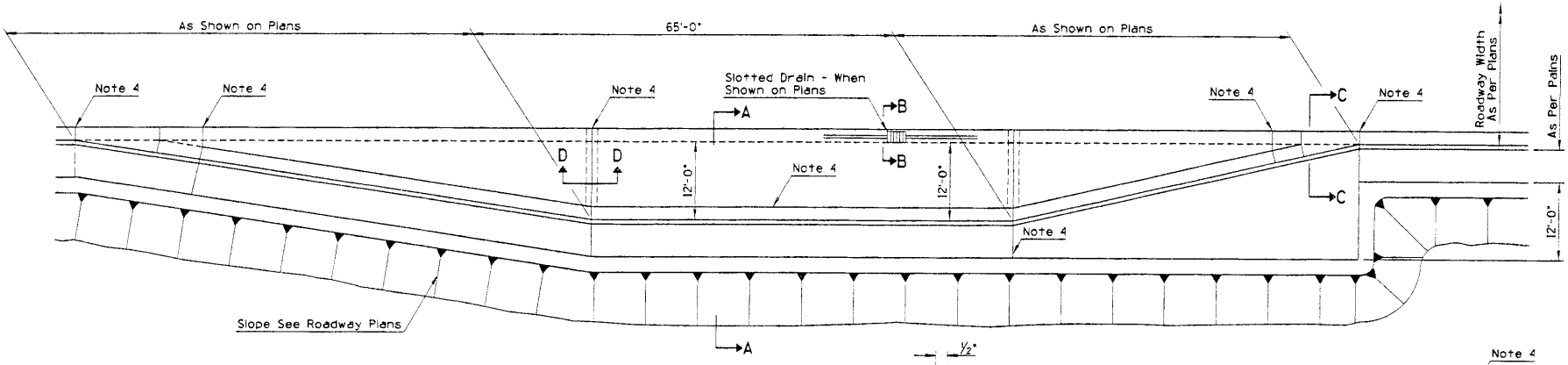

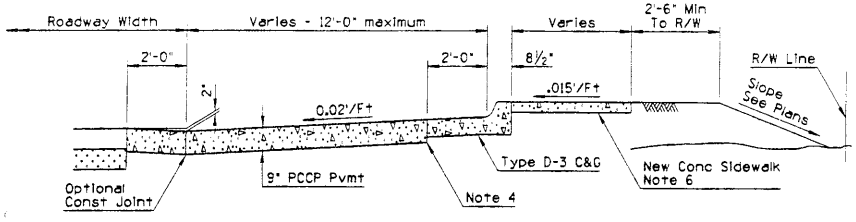

SECTION A-A

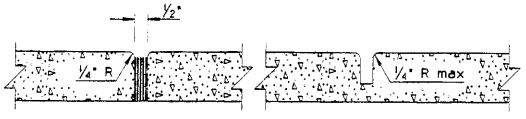

EXPANSION JOINT CONTRACTION JOINT

DETAIL A

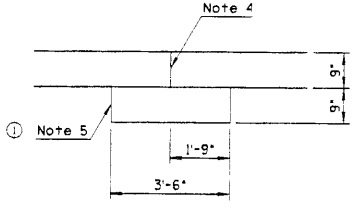

SECTION D-D

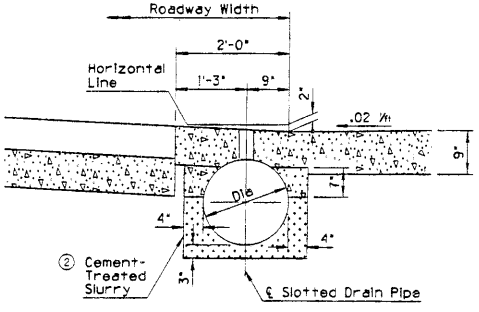

SECTION B-B

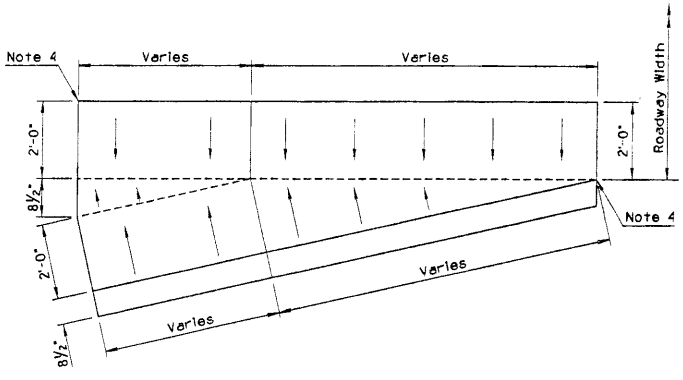

PLAN VIEW OF SECTION C-C

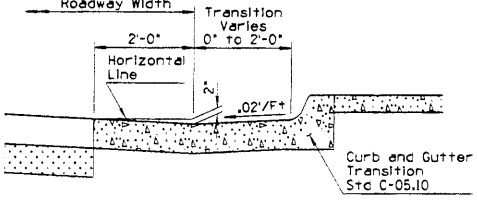

SECTION C-C

GENERAL NOTES

1. The PCCP surfaces within the bus bay area shall be textured transversly. Surface texturing to conform to Section 401.
2. Transverse weakened plane joints shall be constructed at a maximum spacing of 15' and shall align with joints in the concrete curb and gutter.
3. For additional data on slotted drains, See slotted drain Stds C-13.60.
4. For ½" expansion joint with preformed joint fillers, See Detail A.
5. Concrete pad to be poured separately from concrete bus bay pavement.
6. For sidewalk construction details, see Std. C-05.20.

DESIGN APPROVED	STATE OF ARIZONA DEPARTMENT OF TRANSPORTATION DIVISION OF HIGHWAYS STANDARD DRAWINGS	REV. 8/98
APPROVED FOR DISTRIBUTION	CONCRETE BUS BAY	DRAWING NO. C-05.50

NO.	DESCRIPTION OF REVISIONS	MADE BY	DATE
1	ROTATED DRIVEWAY BEYOND SIDEWALK	PNB	10/95
2	ADDED NOTE	PNB	10/95
3	MODIFIED TITLE	BAF	8/98
4			

GENERAL NOTES

1. Grade as shown on plans or as negotiated between Property Owner and Engineer.
2. When field conditions require modifications to plans, contact Design Engineer for assistance.
3. See Sheet 1 of 2 for all other General Notes.

◑ Breakangle greater than 6% requires a vertical curve, L=(10' Min). Vertical curve shall not encroach on roadway or sidewalk.

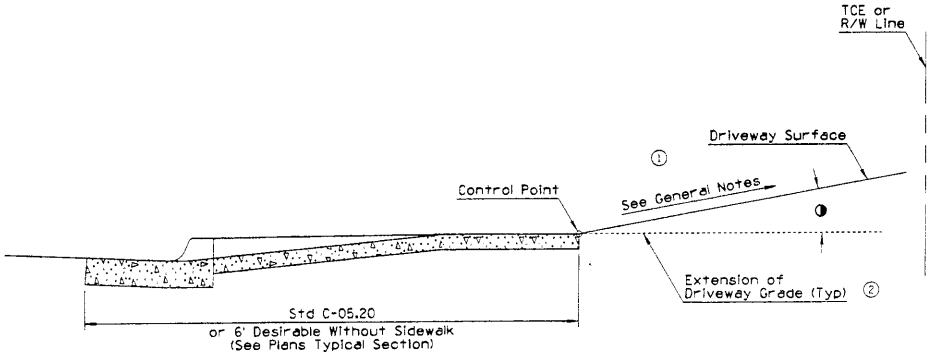

URBAN CROSS SECTION
(UP GRADE)

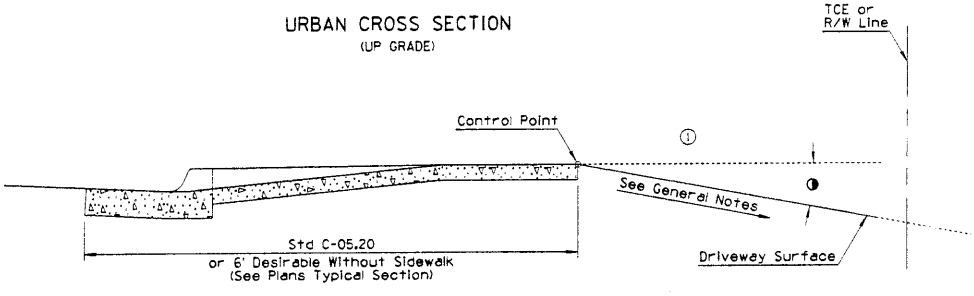

URBAN CROSS SECTION
(DOWN GRADE)

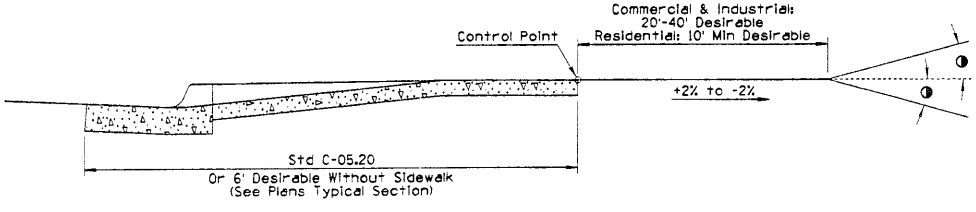

DESIRABLE URBAN CROSS SECTION

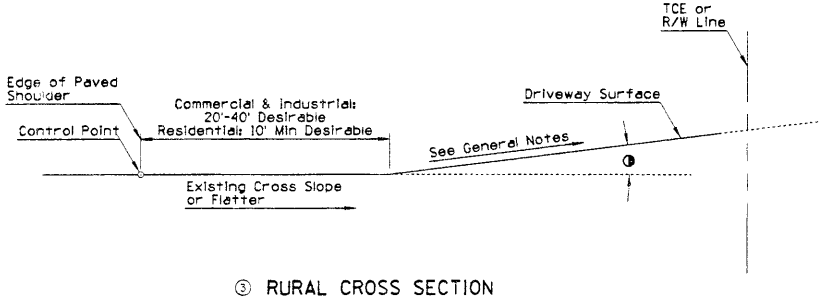

③ RURAL CROSS SECTION
(UP GRADE)

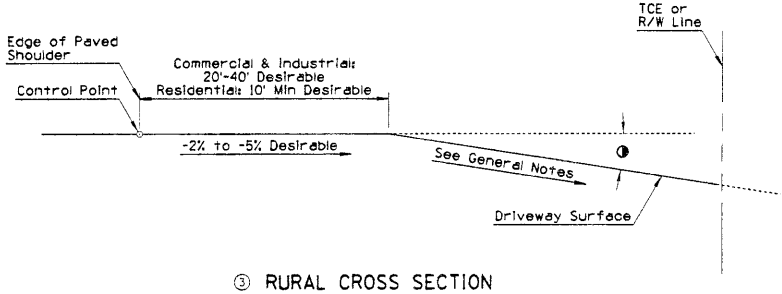

③ RURAL CROSS SECTION
(DOWN GRADE)

DESIGN APPROVED APPROVED FOR DISTRIBUTION	STATE OF ARIZONA DEPARTMENT OF TRANSPORTATION DIVISION OF HIGHWAYS STANDARD DRAWINGS	REV. 8/98
	DRIVEWAY & TURNOUT LAYOUTS	DRAWING NO. C-06.10 Sheet 2 of 2

NO.	DESCRIPTION OF REVISIONS	MADE BY	DATE
1	CHANGED TO EPOXY COATED SMOOTH DOWELS/MODIFIED NOTE	DCS	1/93
2	MODIFIED JOINT WIDTH	DCS	1/93
3	MODIFIED NOTE	TC	1/93
4	MODIFIED JOINT DEPTH	TC	1/93
5	MODIFIED RECESS OF JOINT SEALANT	TC	1/93
6	MODIFIED DETAIL	TC	1/93
7	MODIFIED DIMENSION	TC	1/93
8	MODIFIED SUB TITLE	BAF	6/98
9	DELETED DETAIL	BAF	6/98
10			
11			
12			

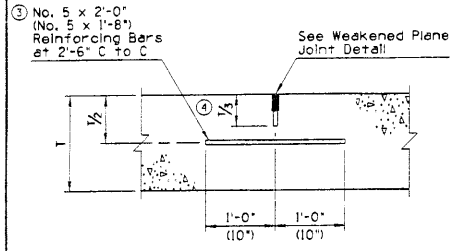

LONGITUDINAL WEAKENED PLANE JOINT
LWP Joint

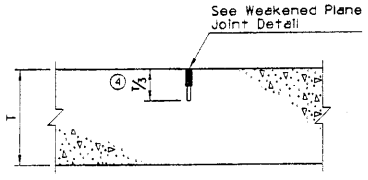

TRANSVERSE WEAKENED PLANE JOINT
TWP Joint
w/o Load Transfer Dowel Assemblies

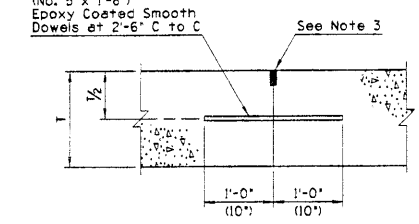

LONGITUDINAL CONSTRUCTION JOINT
LC Joint

GENERAL NOTES

③ 1. When load transfer dowel assemblies are required, use dimensions shown in ( )'s. See Assembly Placement and Edge Clearance Detail, Std C-07.02.

2. In slip form type pavement construction, LWP joints shall be used. In fixed form construction either LWP or LC joints may be used.

3. Same as weakened plane joint detail, except initial saw cut will not be required.

JOINT ABBREVIATIONS

LWP	-	Longitudinal Weakened Plane Joint
TWP	-	Transverse Weakened Plane Joint
LC	-	Longitudinal Construction Joint
TC	-	Transverse Construction Joint
E, H	-	Expansion Joints
S	-	AC/PCC Pavement Edge Seal Joint
T	-	PCCP Thickness

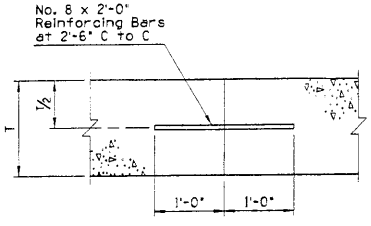

TRANSVERSE CONSTRUCTION JOINT
TC Joint
⑧ Non-Skewed & Skewed Joints

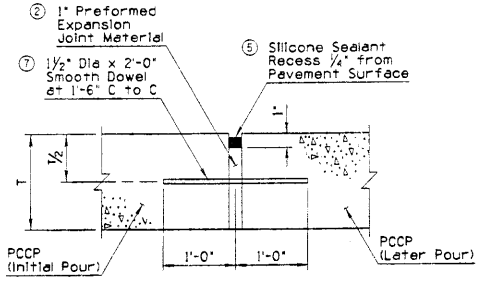

EXPANSION JOINT
E Joint

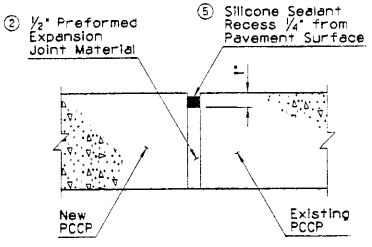

EXPANSION JOINT
H Joint

⑨

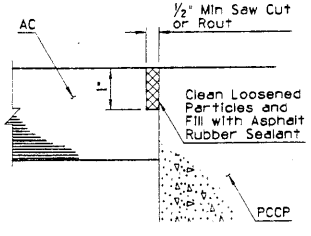

AC/PCCP EDGE SEAL JOINT
S Joint

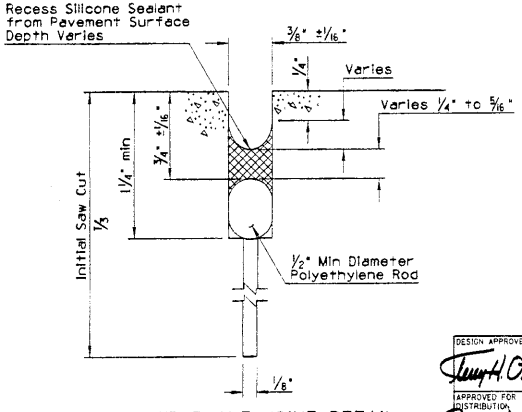

⑥ WEAKENED PLANE JOINT DETAIL

DESIGN APPROVED	STATE OF ARIZONA DEPARTMENT OF TRANSPORTATION DIVISION OF HIGHWAYS STANDARD DRAWINGS	REV. 8/98
APPROVED FOR DISTRIBUTION	PCCP JOINTS	DRAWING NO. C-07.01 Sheet 1 of 2

NO	DESCRIPTION OF REVISIONS	MADE BY	DATE
1	REVISED DETAIL TO SHOW ALL PCCP	PMB	3/94
2	REVISED DETAIL TO SHOW AC & PCCP	PMB	3/94
3	DELETED EXPANSION MATERIAL	PMB	3/94
4	ADDED NOTE ON PAVEMENT SLOPE	PMB	3/94
5	ADDED DETAIL	BAF	8/98
6	ADDED NOTE	BAF	8/98
7	MODIFIED NOTE	BAF	8/98
8			

GENERAL NOTES

(4) 1. Joints are generally shown with pavement sloping toward the joint. Joints are similar with pavement sloping away from the joint.

(6) 2. A "B" joint shall be placed where piers, abutments, barrier transitions, light pole foundations, sign structure foundations, catch basins, slotted drains and all other concrete facilities abut up against the PCCP edge unless otherwise noted in the plans or the standard drawings.

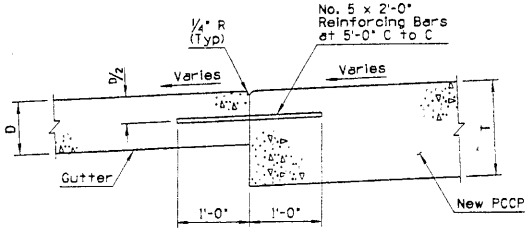

CURB & GUTTER JOINT
G Joint

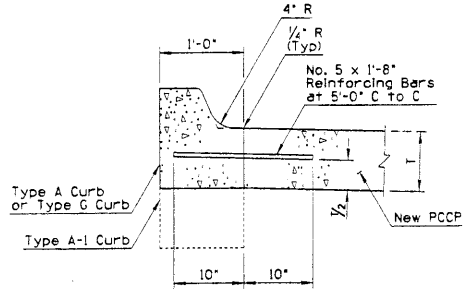

(5) SINGLE CURB JOINT
A Joint

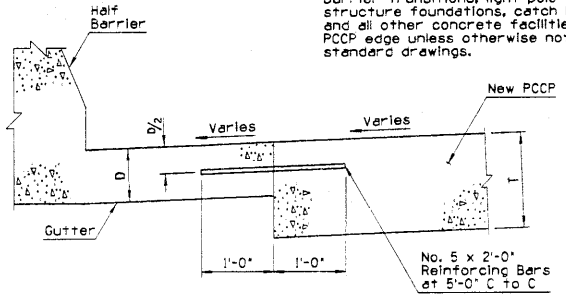

HALF BARRIER JOINT
B Joint

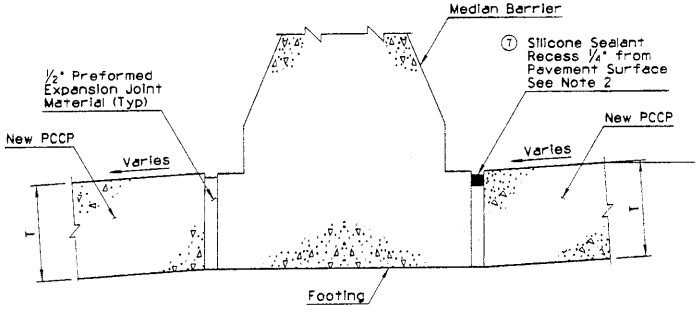

(1) MEDIAN BARRIER JOINT
B Joint
PCCP On Both Sides of Barrier

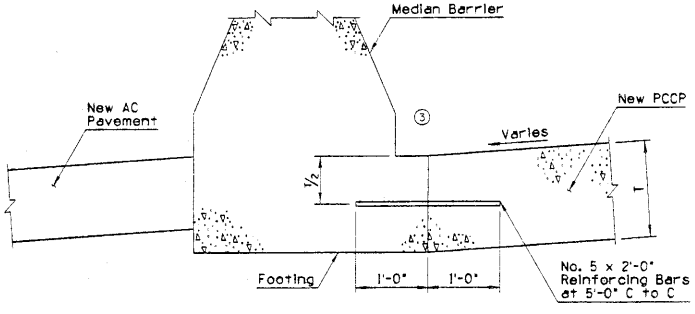

(2) MEDIAN BARRIER JOINT
B Joint
AC Pavement On Back Side of Barrier

JOINT ABBREVIATIONS

G - Gutter Joint
T - PCCP Thickness
D - Gutter Thickness
B - Barrier Joint

DESIGN APPROVED: Terry H. Otterness	STATE OF ARIZONA DEPARTMENT OF TRANSPORTATION DIVISION OF HIGHWAYS STANDARD DRAWINGS	8/98
APPROVED FOR DISTRIBUTION: Ronald Williams	PCCP JOINTS	DRAWING NO. C-07.01 Sheet 2 of 2

NO.	DESCRIPTION OF REVISIONS	MADE BY	DATE
1	REVISED DISTANCE ACROSS BACK OF GORE	PNB	10/95
2	MODIFIED NOTE	PNB	10/95
3	DELETED REFERENCE TO RAMP CONTROL POINT	PNB	10/95
4	MODIFIED NOTE	BAF	7/97

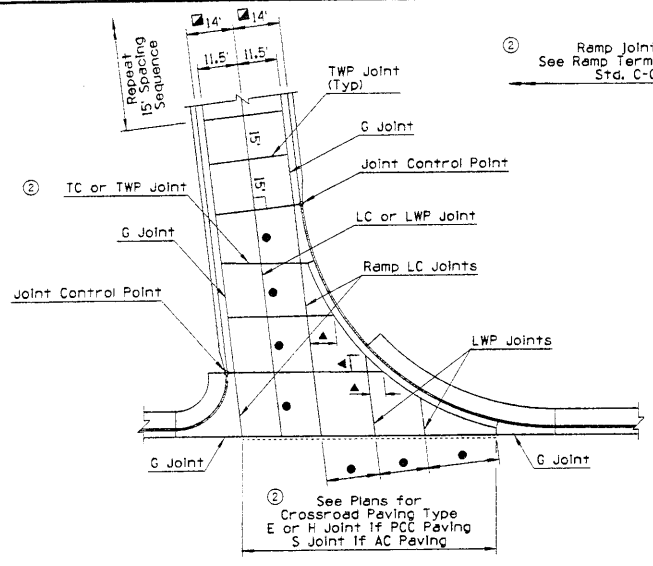

RAMP TERMINAL AT CROSSROAD

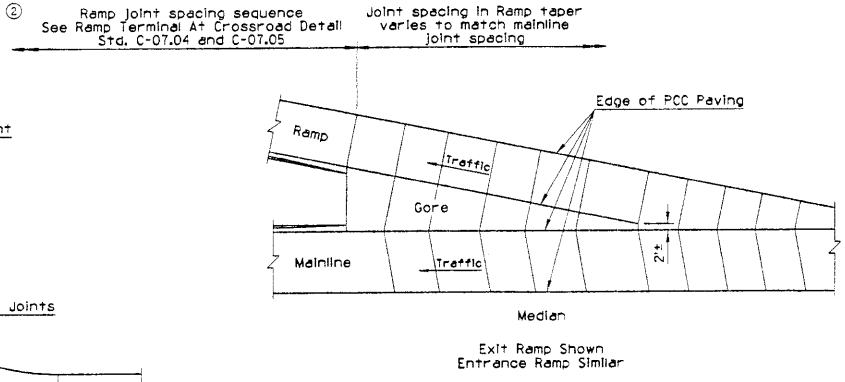

TYPICAL TRANSVERSE WEAKENED PLANE JOINT LAYOUT AT GORE AREAS

GENERAL NOTES

1. Dimensions with a tolerance may be adjusted to align to the nearest transverse weakened plane construction joint as directed.
2. See Std C-07.01 for joint information.
3. See plans for ramp dimensions.
4. See Std C-07.05 for Sections A-A and B-B.
5. The ratio of transverse to longitudinal joint spacing shall be greater than 2/3 but not more than 1½.
6. Ramp transverse joints shall be perpendicular (90°) to the ramp longitudinal joints, except as shown at the ramp terminal.

▲ 6' Minimum

● Varies - 18' Maximum ④
11' Minimum

◨ Transition, See Std C-05.12

◩ Without Curb & Gutter

① ◑ 12' Face of Curb to Face of Curb

[1] Mainline Structure Section, See Plans

[2] Ramp Structure Section, See Plans

[3] Gore Structure Section, See Std C-08.20

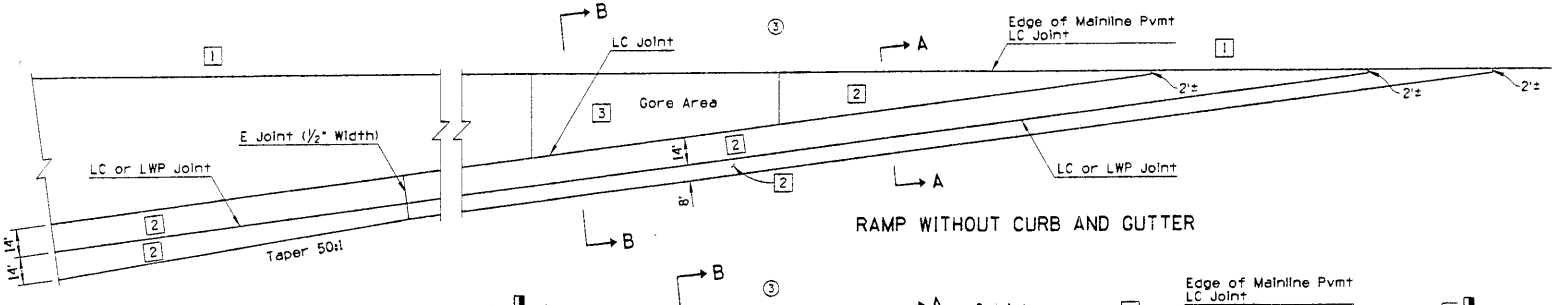

RAMP WITHOUT CURB AND GUTTER

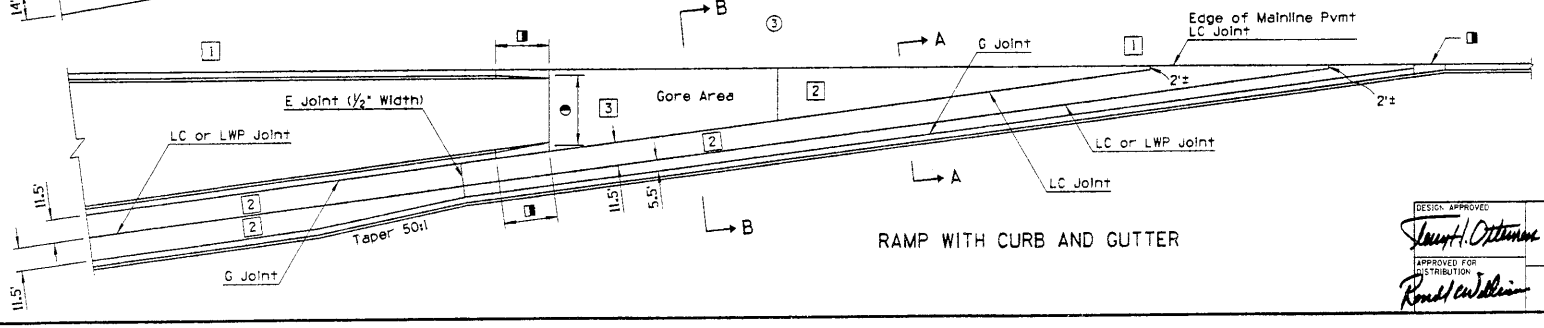

RAMP WITH CURB AND GUTTER

DESIGN APPROVED: Stewart H. Ottemann	STATE OF ARIZONA DEPARTMENT OF TRANSPORTATION DIVISION OF HIGHWAYS STANDARD DRAWINGS	REV. 8/98
APPROVED FOR DISTRIBUTION: Ronald E. Williams	ENTRANCE RAMP PCCP JOINTS	DRAWING NO. C-07.04

NO	DESCRIPTION OF REVISIONS	MADE BY	DATE
1	DELETED REFERENCE TO RAMP CONTROL POINT	PMB	10/95
2	MODIFIED NOTE	PMB	10/95
3	MODIFIED NOTE	BAF	7/97
4			

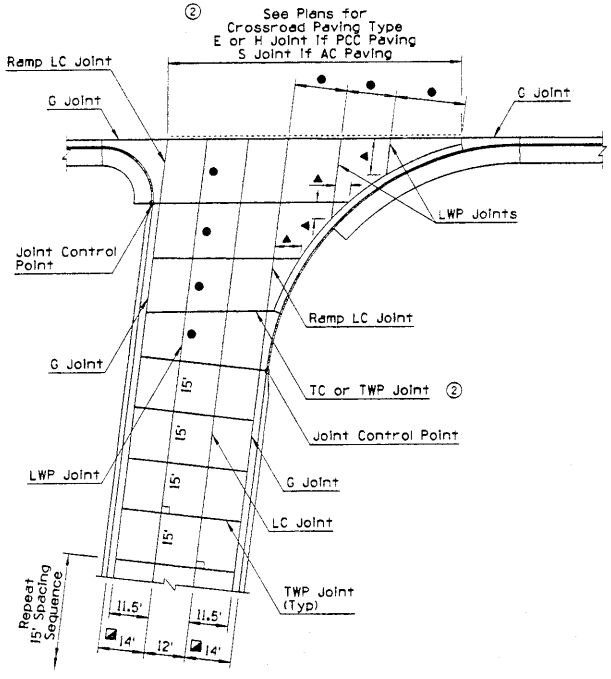

RAMP TERMINAL AT CROSSROAD

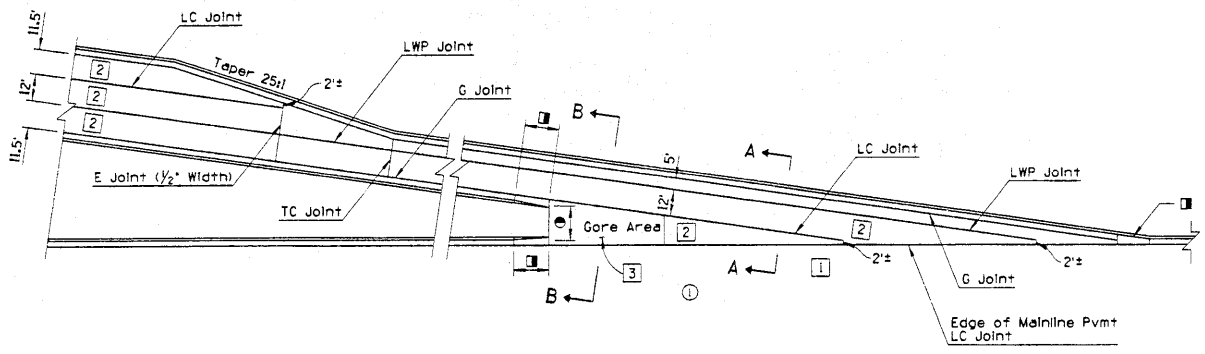

RAMP WITH CURB AND GUTTER

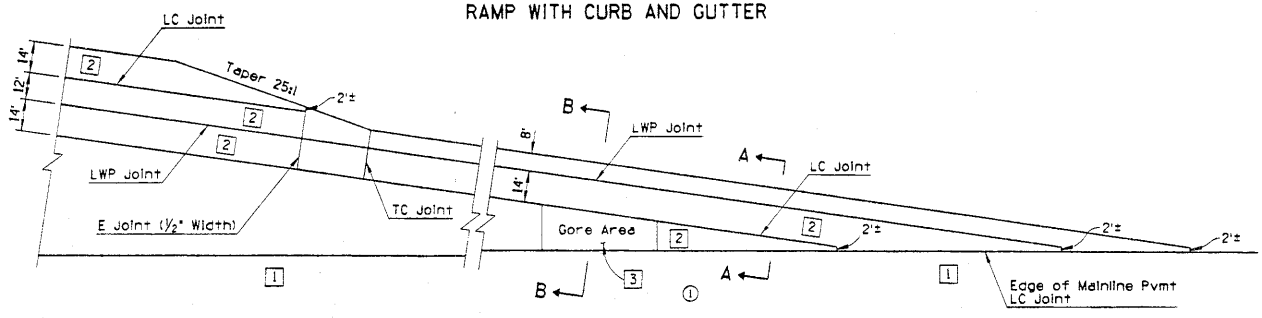

RAMP WITHOUT CURB AND GUTTER

GENERAL NOTES

1. See Std C-07.04 for General Notes and Transverse Joint Layout at Gore Areas.

◪ Without Curb & Gutter

▲ 6' Minimum

● Varies - 18' Maximum ③
11' Minimum

◑ 20' Face of Curb to Face of Curb

◨ Transition, See Std C-05.12

1 Mainline Structure Section, See Plans

2 Ramp Structure Section, See Plans

3 Gore Structure Section, See Std C-08.20

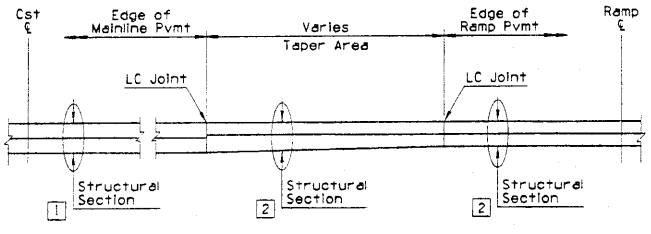

SECTION A-A
RAMP TAPER

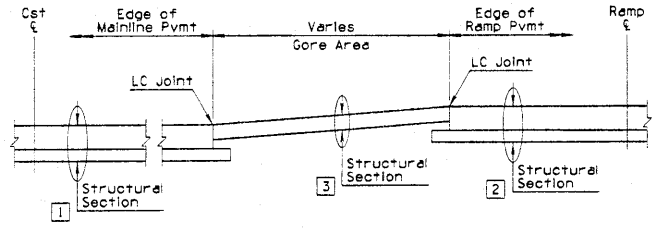

SECTION B-B
GORE AREA

DESIGN APPROVED	STATE OF ARIZONA DEPARTMENT OF TRANSPORTATION DIVISION OF HIGHWAYS STANDARD DRAWINGS	REV. 8/98
APPROVED FOR DISTRIBUTION	EXIT RAMP PCCP JOINTS	DRAWING NO. C-07.05

NO.	DESCRIPTION OF REVISIONS	MADE BY	DATE
1	DELETED NOTE & DIMENSION	BAF	7/97
2			
3			
4			

GENERAL NOTES

1. See Std C-07.01 for joint information.
2. See plans for crossroad dimensions.
3. See Std C-07.04 and C-07.05 for ramp joints.
4. The ratio of transverse to longitudinal joint spacing shall be greater than 2/3 but not more than 1½.
5. Transverse joints shall be perpendicular (90°) to the longitudinal joints, except as shown at the ramp terminal.

▲ 6' Minimum

● Varies - 18' Maximum
8' Minimum

■ Varies - 12' when adjacent gutter widths are 2' or less.
- 15' when adjacent gutter widths are greater than 2'.

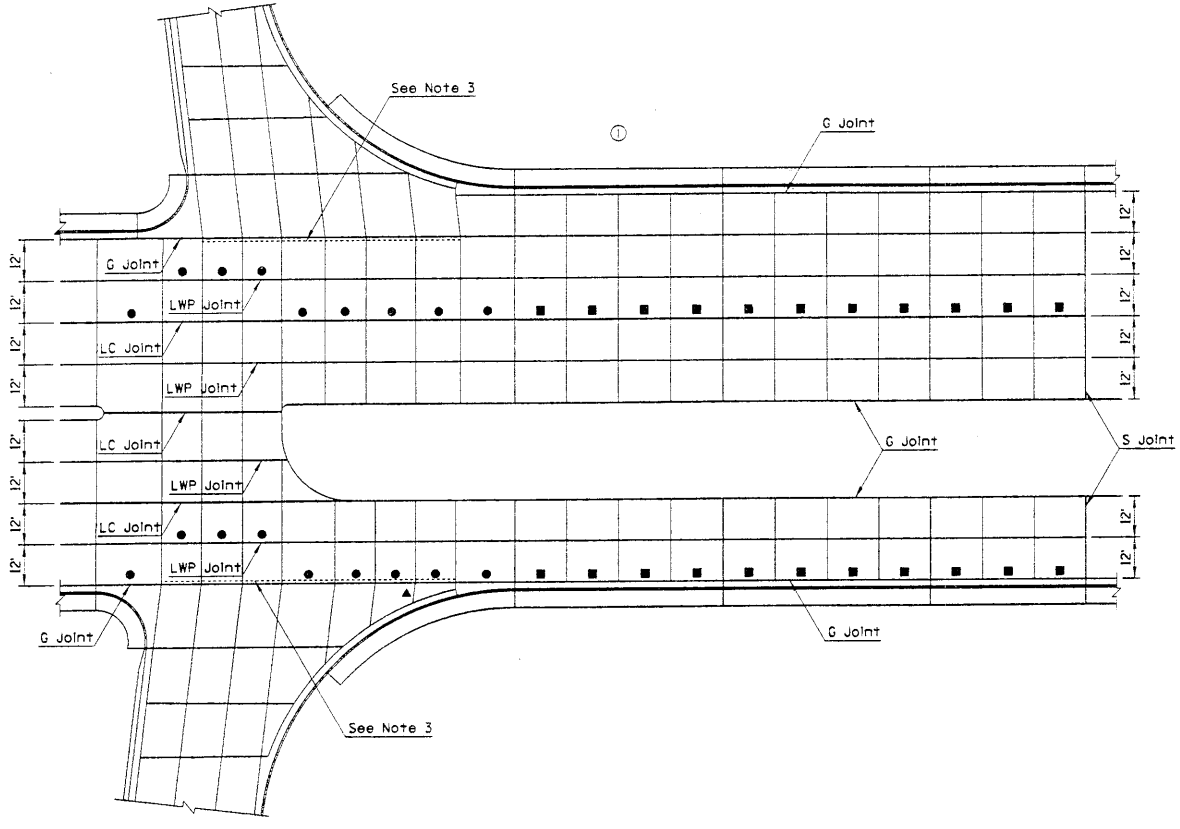

CROSSROAD AT RAMP TERMINAL

DESIGN APPROVED

APPROVED FOR DISTRIBUTION

STATE OF ARIZONA
DEPARTMENT OF TRANSPORTATION
DIVISION OF HIGHWAYS
STANDARD DRAWINGS

8/98

CROSSROAD
PCCP JOINTS

DRAWING NO.
C-07.10

NO.	DESCRIPTION OF REVISIONS	MADE BY	DATE
1	REPLACED STEEL BLOCK WITH WOOD BLOCK	BAT	5/96
2			
3			
4			

GENERAL NOTES

● - indicates ARTBA designation

G4(1S) SYSTEM

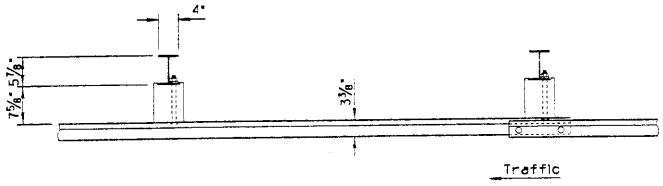

PLAN

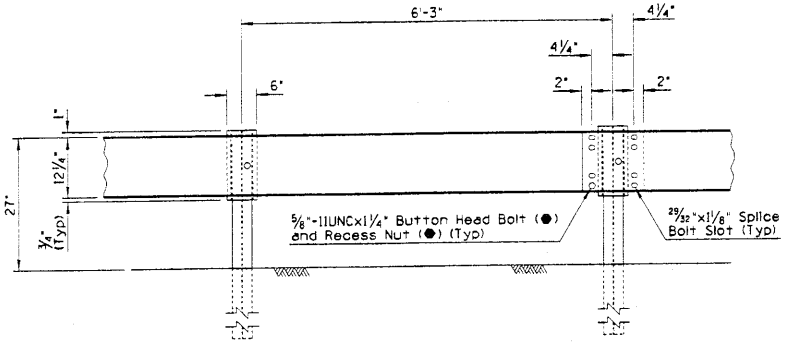

ELEVATION
G4(1S) SYSTEM

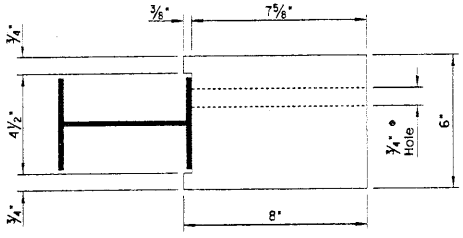

TOP
VIEW

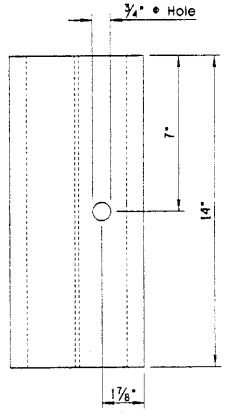

FRONT
VIEW

① WOODEN BLOCK DETAIL

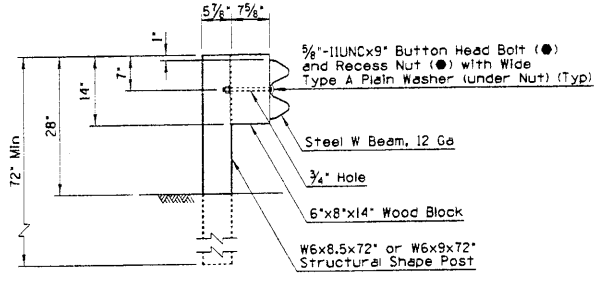

SECTION G4(1S)
SHOWN WITHOUT CURB

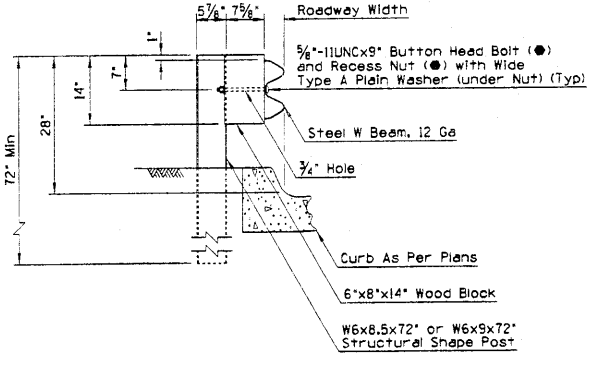

SECTION G4(1S)
SHOWN WITH CURB

DESIGN APPROVED	STATE OF ARIZONA DEPARTMENT OF TRANSPORTATION DIVISION OF HIGHWAYS STANDARD DRAWINGS	REV. 8/98
APPROVED FOR DISTRIBUTION	G4(1S) BLOCKED OUT W BEAM (STEEL POST)	DRAWING NO. C-10.21

NO.	DESCRIPTION OF REVISIONS	MADE BY	DATE
1	ADDED TIMBER POST OPTION ON SHEET 2	PMB	10/95
2	DELETED REFERENCES TO GUTTER CROSS SLOPE	PMB	10/95
3	MODIFIED NOTE	BAT	7/97
4			

GENERAL NOTES

1. Height of curb shall not exceed 4 inches.

● - indicates ARTBA designation

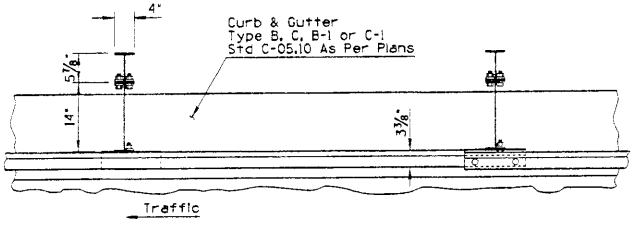

PLAN

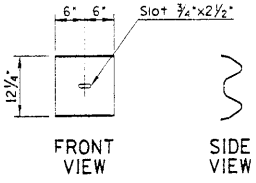

W BEAM BACK-UP PLATE DETAIL

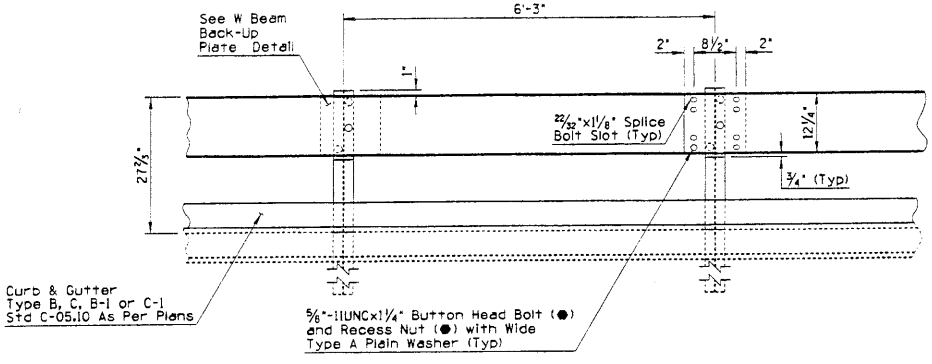

ELEVATION

G4(1S-MODIFIED)

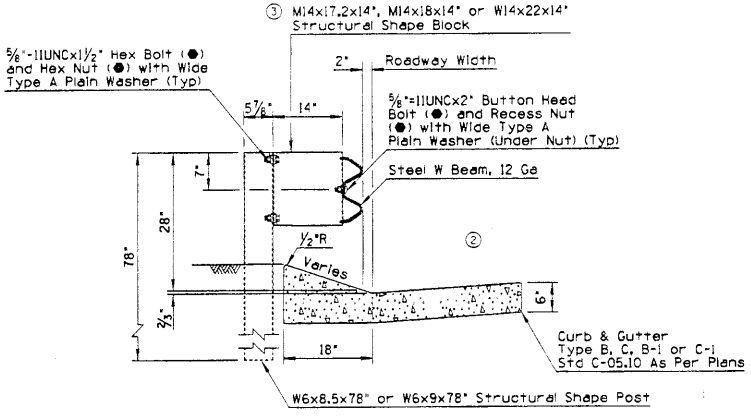

SECTION

DESIGN APPROVED	STATE OF ARIZONA DEPARTMENT OF TRANSPORTATION DIVISION OF HIGHWAYS STANDARD DRAWINGS	REV. 8/98
APPROVED FOR DISTRIBUTION	G4(MODIFIED) BLOCKED OUT W BEAM WITH SPECIAL CURB AND GUTTER ① G4(1S-MODIFIED) (STEEL POST)	DRAWING NO. C-10.22 Sheet 1 of 2

NO	DESCRIPTION OF REVISIONS	MADE BY	DATE
1	DELETED NOTE	BAF	7/98
2	MODIFIED NOTE	BAF	7/98
3	CHANGED BLOCK-OUT	BAF	7/98
4	DELETED BACK-UP PLATE	BAF	7/98

GENERAL NOTES

● - Indicates ARTBA designation

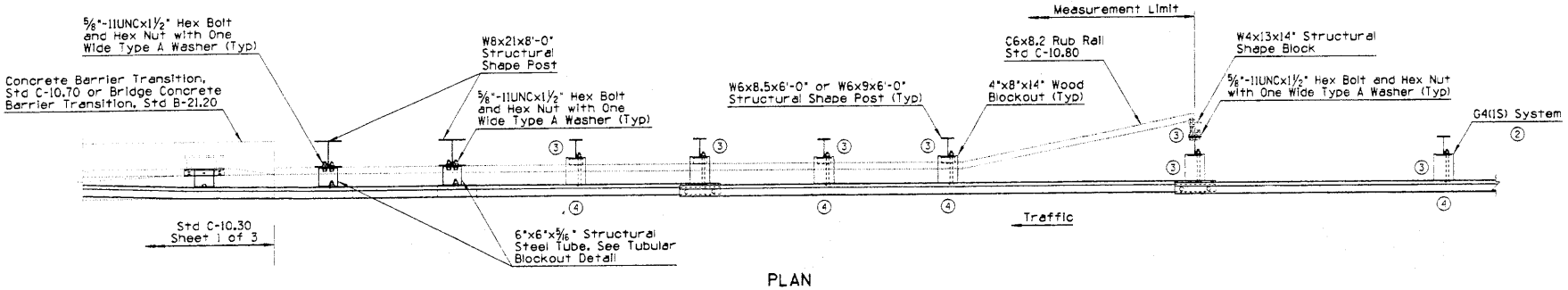

PLAN

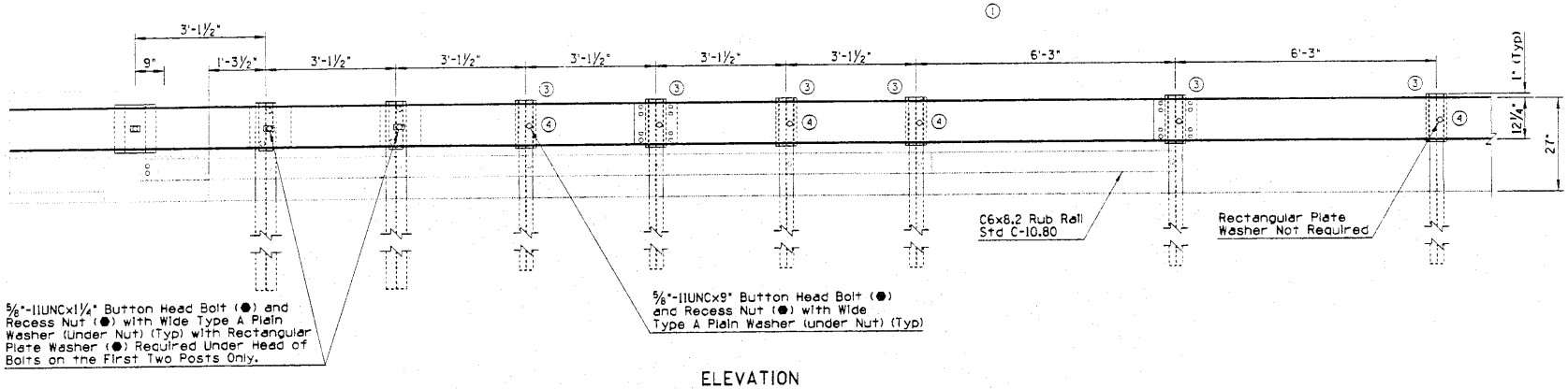

ELEVATION

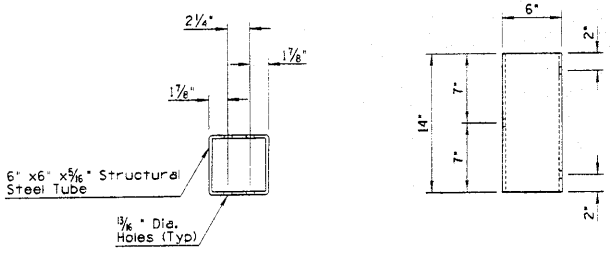

TUBULAR BLOCKOUT DETAIL

Guard Rail Transition (Steel Post)

DESIGN APPROVED	STATE OF ARIZONA DEPARTMENT OF TRANSPORTATION DIVISION OF HIGHWAYS STANDARD DRAWINGS	8/98
APPROVED FOR DISTRIBUTION	GUARD RAIL TRANSITION, W BEAM TO CONCRETE HALF BARRIER (APPROACH)	DRAWING NO. C-10.30 Sheet 3 of 3

NO	DESCRIPTION OF REVISIONS	MADE BY	DATE
1	ADDED REFERENCE TO STD C-10.71.	PNB	10/95
2	DELETED PLATE WASHER	BAF	5/96
3	DELETED PLATE WASHER NOTE	BAF	5/96
4			

GENERAL NOTES

● - Indicates ARTBA designation

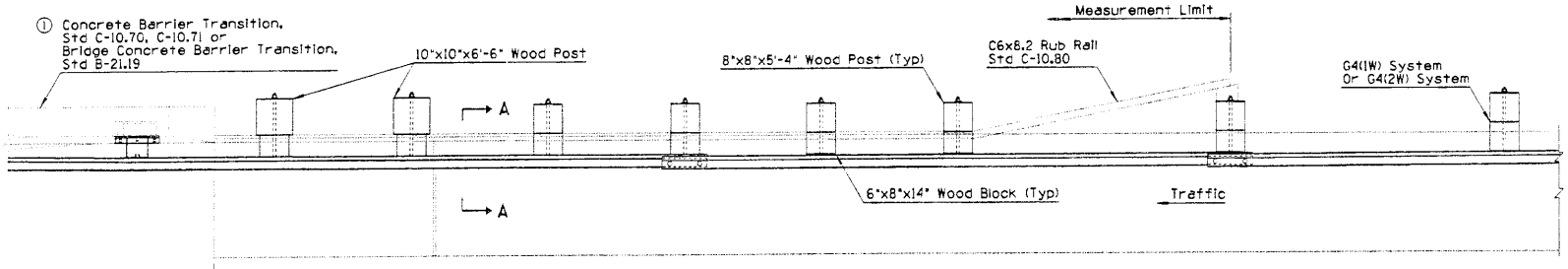

PLAN

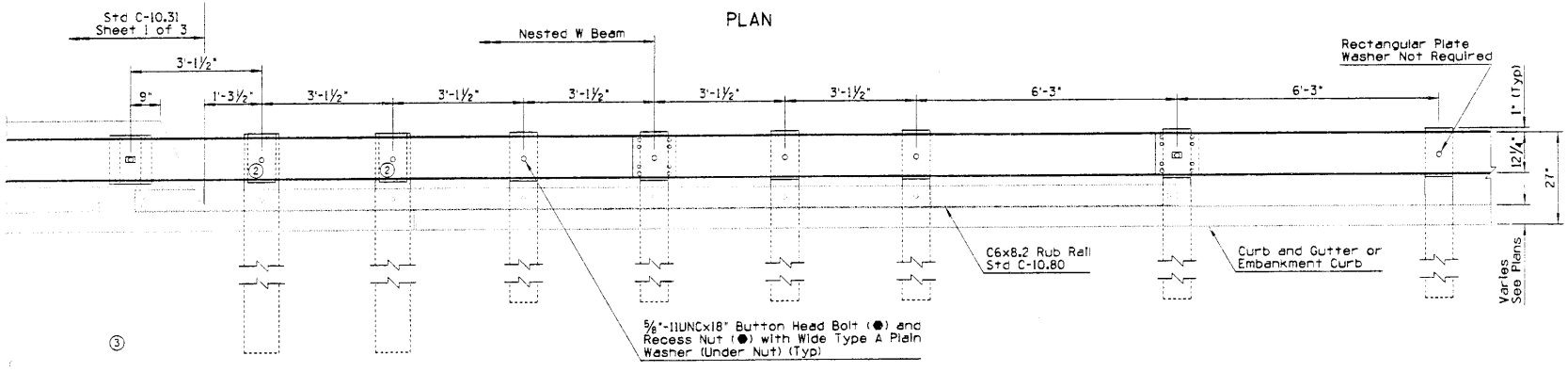

ELEVATION

Guard Rail Transition (Timber Post)

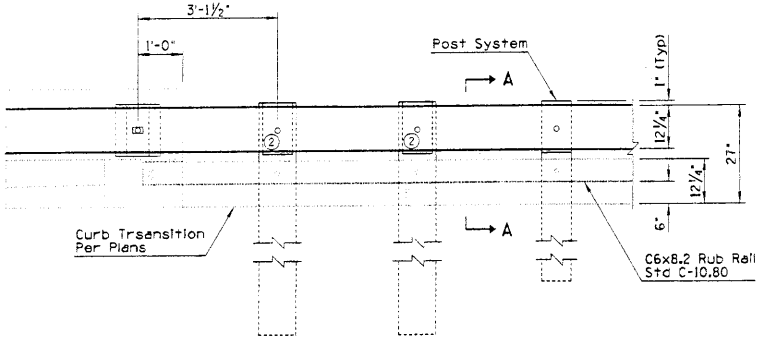

ELEVATION

Note:
For Notes and Dimensions Not Shown, See Guard Rail Transition Above.

Guard Rail Transition To Existing Concrete Barrier Transition

Note:
Curb Height Shall Not Exceed 6" When Adjacent to Rub Rail.

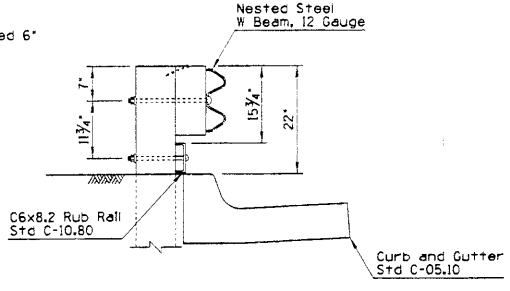

SECTION A-A

DESIGN APPROVED	STATE OF ARIZONA DEPARTMENT OF TRANSPORTATION DIVISION OF HIGHWAYS STANDARD DRAWINGS	REV. 8/98
APPROVED FOR DISTRIBUTION	GUARD RAIL TRANSITION W BEAM TO CONCRETE HALF BARRIER (APPROACH) (WITH CURB)	DRAWING NO. C-10.31 Sheet 2 of 3

NO.	DESCRIPTION OF REVISIONS	MADE BY	DATE
1	ADDED REFERENCE TO STD C-10.71	PNE	10/95
2	DELETED PLATE WASHER	BAF	05/98
3	DELETED REFERENCE TO PLATE WASHER	BAF	05/98
4	DELETED BACK-UP PLATE	BAF	06/98
5	CHANGED BLOCK-OUT	BAF	06/98
6	MODIFIED NOTE	BAF	06/98
7	ADDED SECTION	BAF	06/98
8			

GENERAL NOTES

● - Indicates ARTBA designation

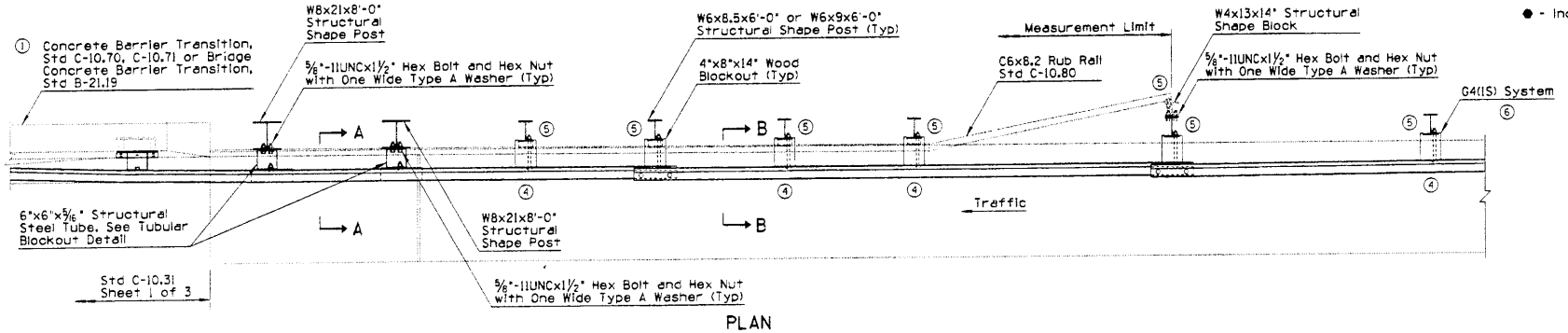

PLAN

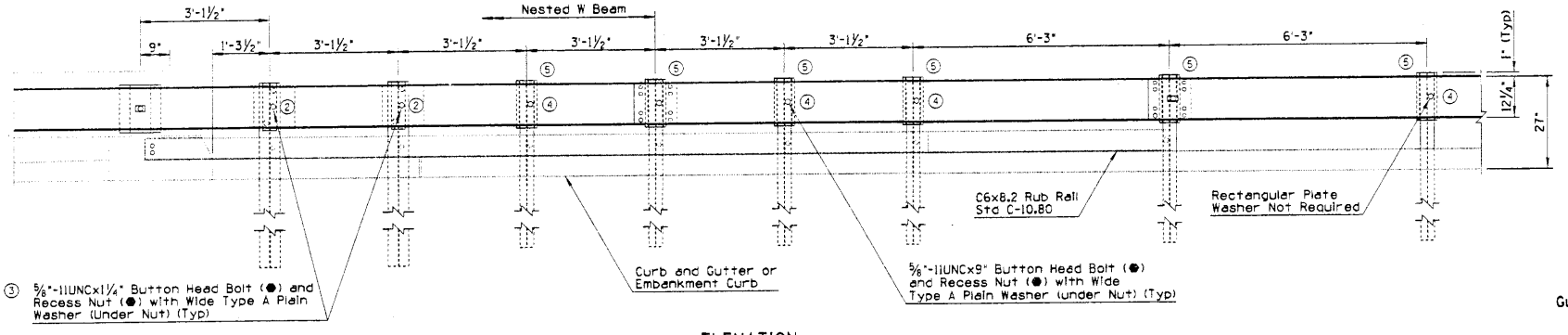

ELEVATION

Guard Rail Transition (Steel Post)

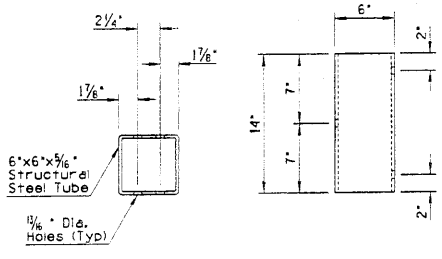

TUBULAR BLOCKOUT DETAIL

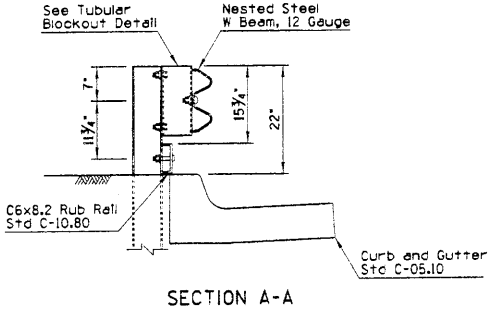

SECTION A-A

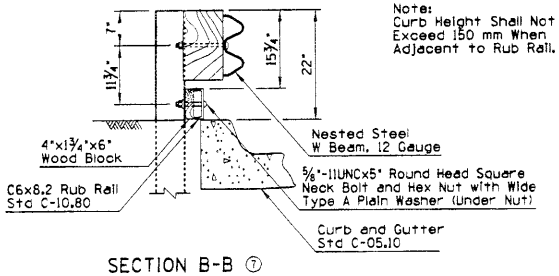

SECTION B-B ⑦

DESIGN APPROVED	STATE OF ARIZONA DEPARTMENT OF TRANSPORTATION DIVISION OF HIGHWAYS STANDARD DRAWINGS	REV. 8/98
APPROVED FOR DISTRIBUTION	GUARD RAIL TRANSITION, W BEAM TO CONCRETE HALF BARRIER (APPROACH) (WITH CURB)	DRAWING NO. C-10.31 Sheet 3 of 3

NO	DESCRIPTION OF REVISIONS	MADE BY	DATE
1	ADDED REFERENCE TO STD C-10.71	PMS	10/95
2	CHANGED BLOCK-OUT	BAF	07/98
3	DELETED BACK-UP PLATE	BAF	07/98
4	MODIFIED NOTE	BAF	07/98

GENERAL NOTES

● - Indicates ARTBA designation

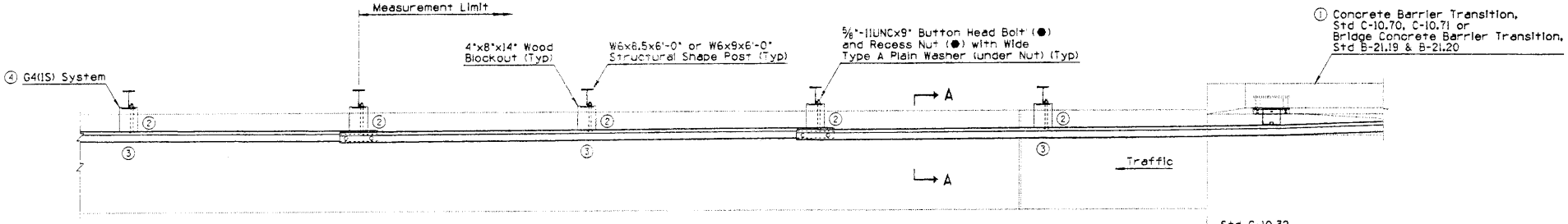

PLAN

Std C-10.32 Sheet 1 of 3

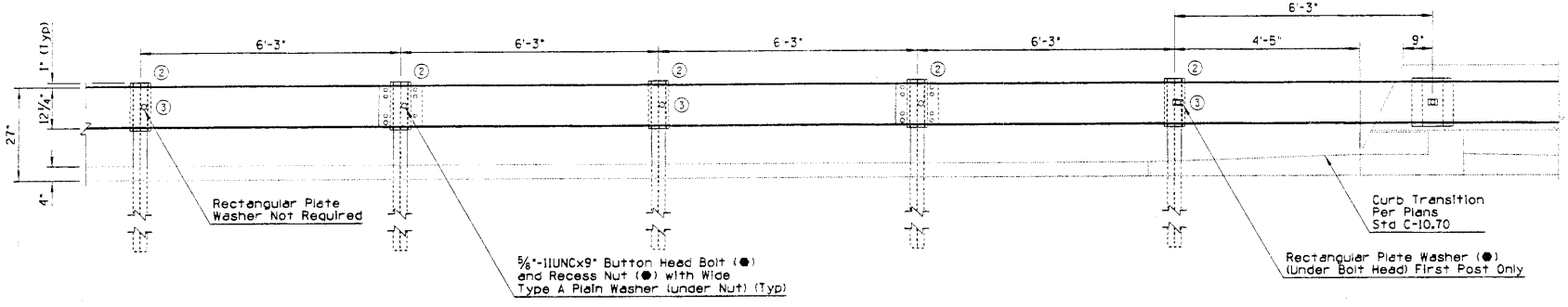

ELEVATION

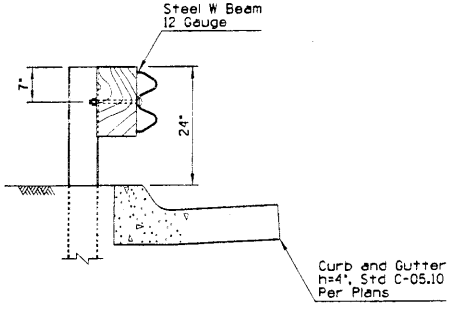

SECTION A-A

Guard Rail Transition (Steel Post)

DESIGN APPROVED	STATE OF ARIZONA DEPARTMENT OF TRANSPORTATION DIVISION OF HIGHWAYS STANDARD DRAWINGS	REV. 8/98
APPROVED FOR DISTRIBUTION	GUARD RAIL TRANSITION, W BEAM TO CONCRETE HALF BARRIER (DEPARTURE)	DRAWING NO. C-10.32 Sheet 3 of 3

NO.	DESCRIPTION OF REVISIONS	MADE BY	DATE
1			
2			
3			
4			

GENERAL NOTES

1. The cable assembly shall be tightened to remove slack.
2. To ensure that the bearing plate remains in position, one wrap of 14 gauge galvanized steel wire shall be wrapped around the terminal post near the top of the plate.
3. See Std. C-10.03 for measurement limits.

* See W-Beam End Section (Rounded), ARTBA Std. RE-6-79, for dimension variables.

● - indicates ARTBA designation

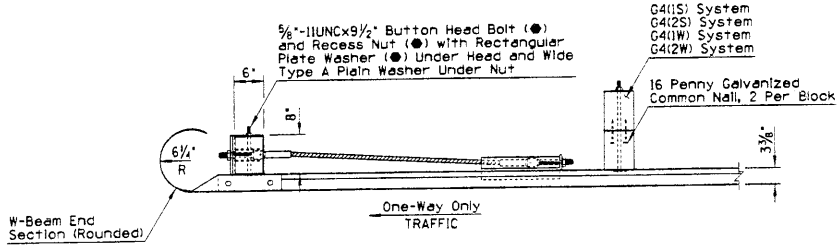

PLAN

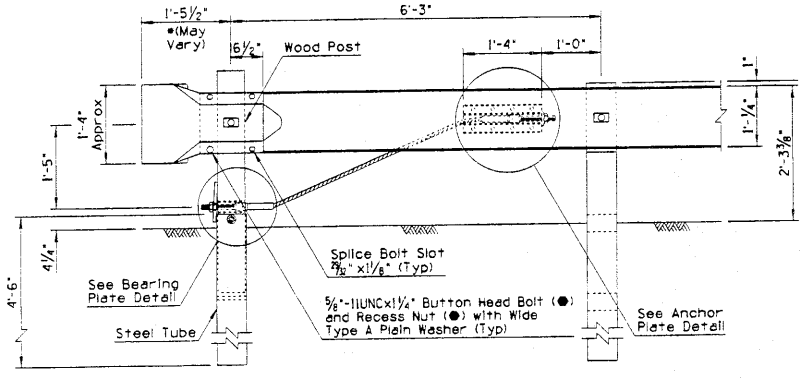

ELEVATION

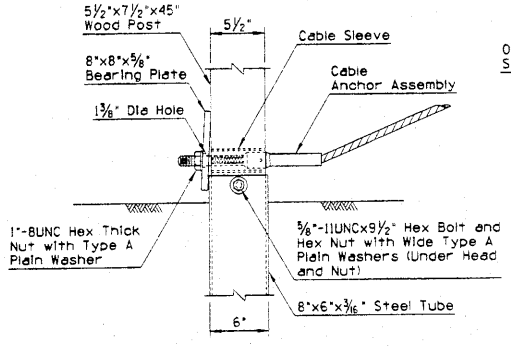

FRONT VIEW

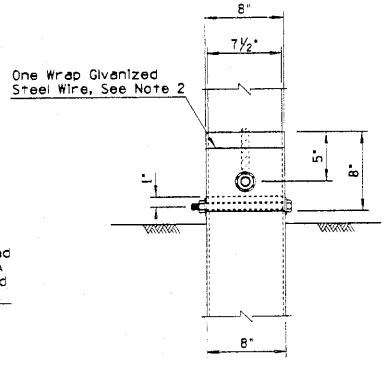

SIDE VIEW

BEARING PLATE DETAIL

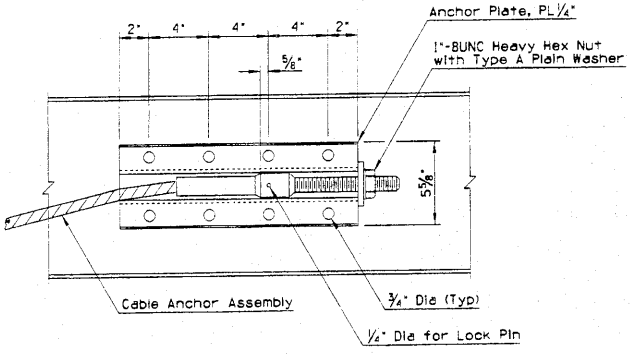

FRONT VIEW

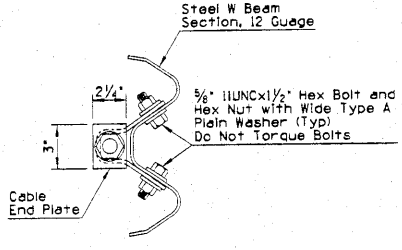

SIDE VIEW

ANCHOR PLATE DETAIL

DESIGN APPROVED	STATE OF ARIZONA DEPARTMENT OF TRANSPORTATION DIVISION OF HIGHWAYS STANDARD DRAWINGS	REV. 8/98
APPROVED FOR DISTRIBUTION	GUARD RAIL END TERMINAL FOUNDATION TUBE	DRAWING NO. C-10.45

NO.	DESCRIPTION OF REVISIONS	MADE BY	DATE
1			
2			
3			
4			

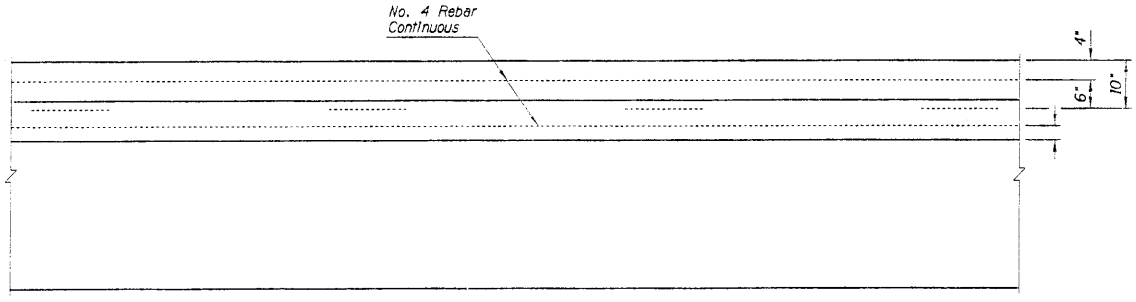

PLAN

GENERAL NOTES

1. Half Barrier shall be constructed by the slip form or formed Cast-In-Place method.
2. When obstacles are encountered which prevents the use of slip form equipment, the closure shall be accomplished by the use of stationary forms.
3. Concrete shall be Class S, design strength f'_c =3000 PSI.
4. No. 4 Rebar shall extend 12" past the construction joint at the completion of the day's pour.
5. Thickness of footing, "D" can be adjusted to match the PCCP thickness, as approved by the Engineer.
6. When the pavement section slopes away from the gutter, the slope of the gutter shall match the pavement cross slope. Therefore, the 2" gutter depression is not applicable.
7. When bridges are encountered, the cross slope of the gutter shall be transitioned to match the cross slope of the bridge. Length of the transition is 15 feet.

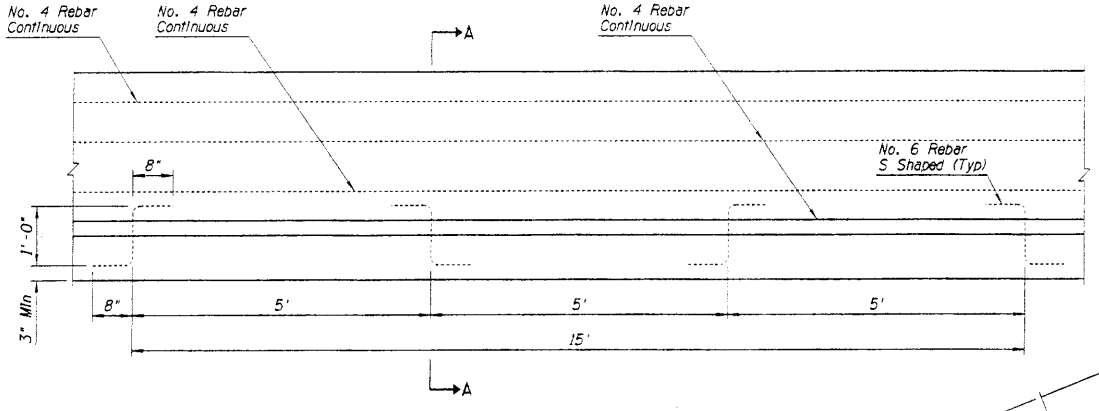

ELEVATION

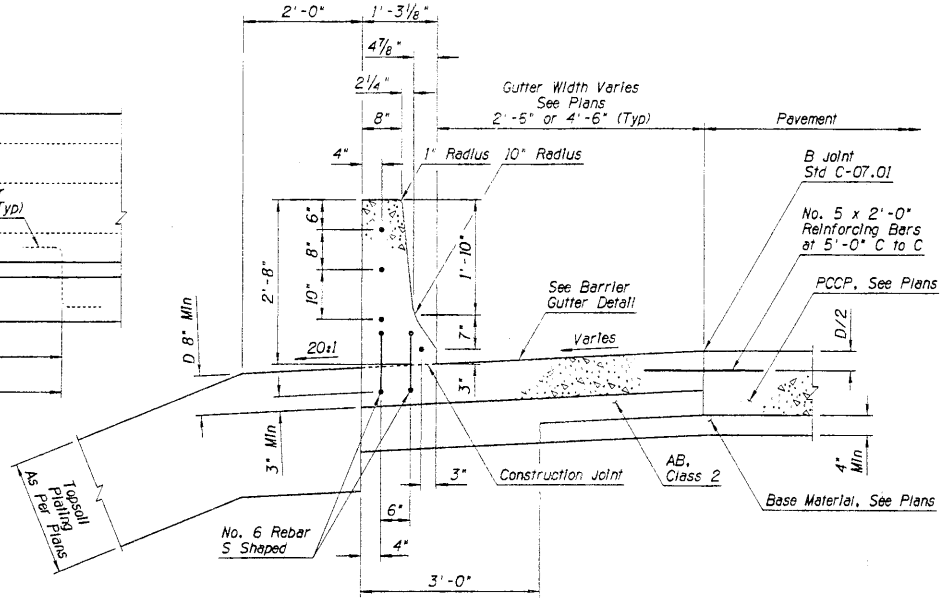

SECTION A-A

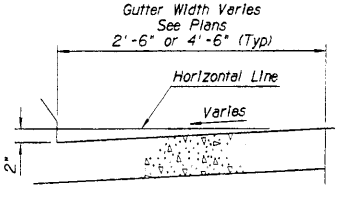

BARRIER GUTTER DETAIL

DESIGN APPROVED	STATE OF ARIZONA DEPARTMENT OF TRANSPORTATION DIVISION OF HIGHWAYS STANDARD DRAWINGS	8/98
APPROVED FOR DISTRIBUTION	CONCRETE HALF BARRIER TYPE 'F' WITH GUTTER	DRAWING NO. C-10.62

NO.	DESCRIPTION OF REVISIONS	MADE BY	DATE
1	REVISED NUMBER FROM C-10.02	PNB	7/94
2	CHANGED TO BOTH SLIP & FIXED FORM	PNB	7/94
3	MODIFIED NOTE	DAF	7/97
4			

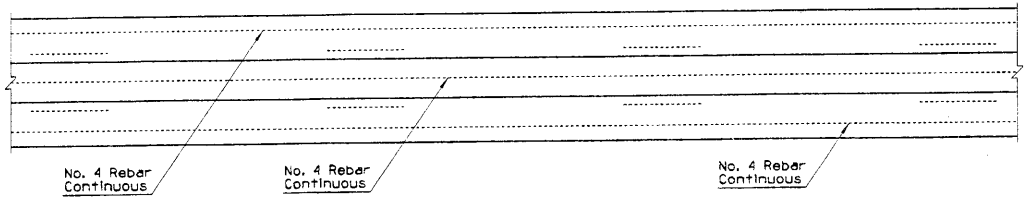

PLAN

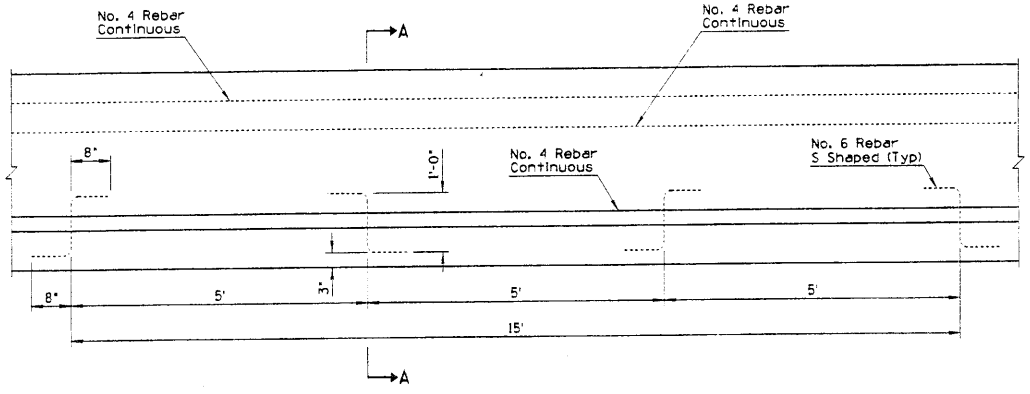

ELEVATION

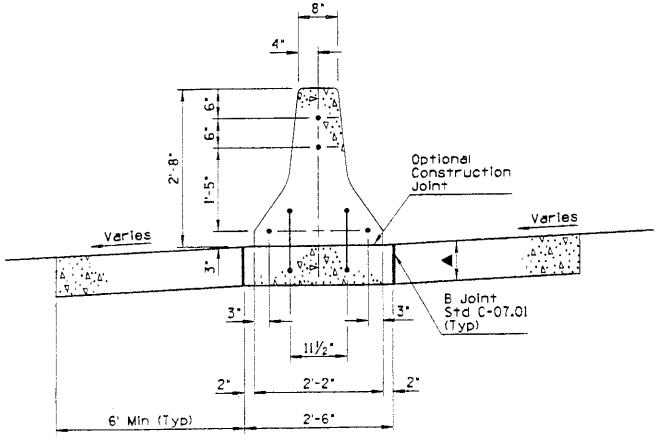

WITH PCC PAVEMENT

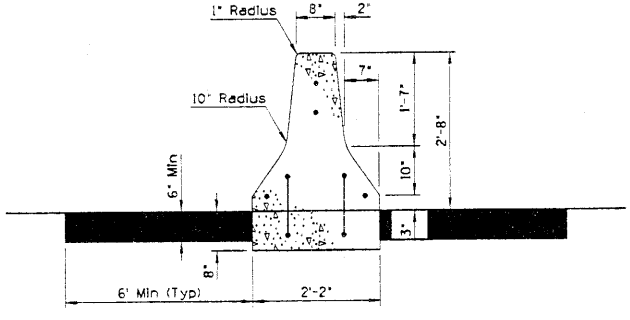

WITH AC PAVEMENT

SECTION A-A

GENERAL NOTES

(3) 1. Median Barrier shall be constructed by the slip form or formed Cast-In-Place method.

2. When obstacles are encountered which prevent the use of slip form equipment, the closure shall be accomplished by the use of stationary forms.

3. Concrete shall be Class S, design strength f'_c =3000 PSI.

4. If the footing and barrier are cast monolithically, No. 6 S shaped rebars will not be required.

5. In no case shall the width of barrier exceed the width of the barrier footing or overhang the adjacent pavement.

6. No. 4 Rebar shall extend 12" past the construction joint at the completion of the day's pour.

▲ Depth to match adjacent PCCP thickness (8" Min).

DESIGN APPROVED

APPROVED FOR DISTRIBUTION

STATE OF ARIZONA
DEPARTMENT OF TRANSPORTATION
DIVISION OF HIGHWAYS
STANDARD DRAWINGS

REV. 8/98

(2) MEDIAN BARRIER
CAST IN PLACE
SLIP FORM & FIXED FORM

DRAWING NO. (1) C-10.66

NO	DESCRIPTION OF REVISION	MADE BY	DATE
1	MODIFIED DETAIL	PHD	7/94
2	ADDED DETAIL	PHD	7/94
3	ADDED NOTE	PHD	7/94
4	MODIFIED NOTE	BAF	7/97

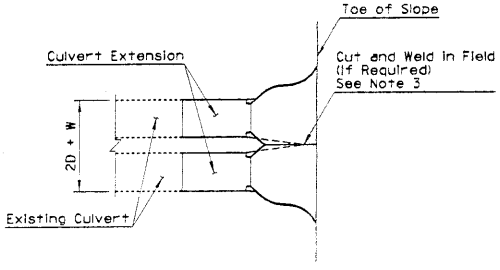

② SPECIAL MULTIPLE PIPE END SECTION DETAIL
FOR PIPE CULVERT EXTENSIONS ONLY

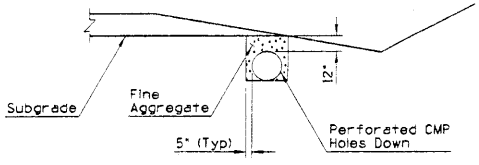

① PERFORATED CMP INSTALLATION

GENERAL NOTES

④ 1. Minimum cover over pipe culverts shall be 12", measured from the top of pipe.

2. See remaining C-13 Series standards for other pipe details.

③ 3. After welding, the damaged coating shall be cleaned by a wire brush and painted with at least one full coat of Paint No. 4, or given two coats of an approved hot asphalt paint, as directed by the Engineer.

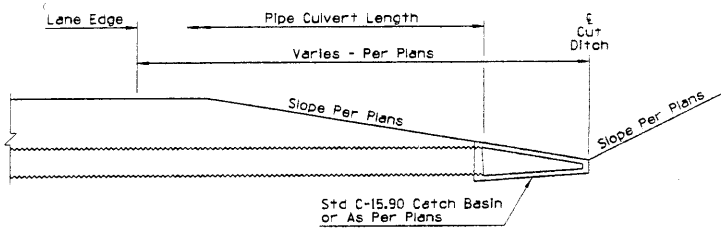

① PIPE AND CATCH BASIN INSTALLATION
AT SAG CONDITION OF CUT DITCH

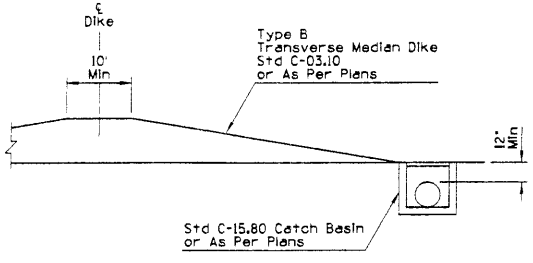

① PIPE AND CATCH BASIN INSTALLATION
AT BASE OF TRANSVERSE DIKE

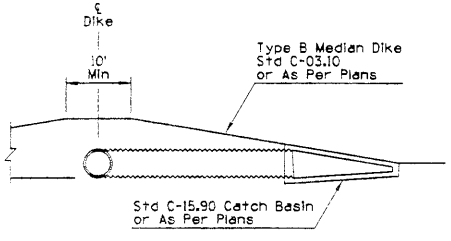

① PIPE AND CATCH BASIN INSTALLATION
AT FACE OF TRANSVERSE DIKE

DESIGN APPROVED	STATE OF ARIZONA DEPARTMENT OF TRANSPORTATION DIVISION OF HIGHWAYS STANDARD DRAWINGS	REV. 8/98
APPROVED FOR DISTRIBUTION	PIPE CULVERT INSTALLATION	DRAWING NO. C-13.10 Sheet 2 of 2

NO.	DESCRIPTION OF REVISIONS	MADE BY	DATE
1	ADDED NOTE	PMG	7/94
2	REARRANGED STD	PMG	7/94
3	MODIFIED NOTE	BAT	8/98
4			

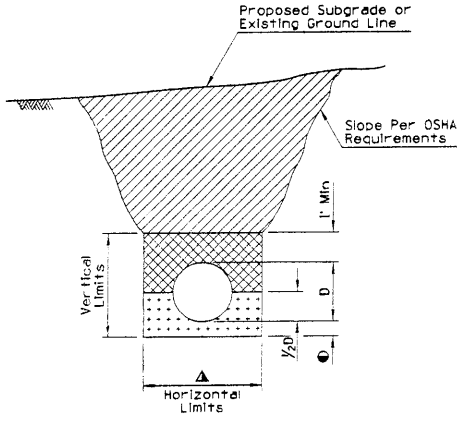

TRENCH CONDITION
IN NATURAL GROUND OR IN EMBANKMENT
WITHOUT BRACING

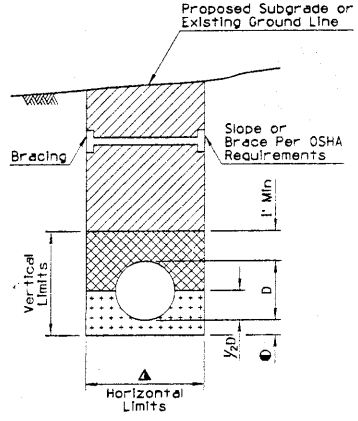

TRENCH CONDITION
IN NATURAL GROUND OR IN EMBANKMENT
WITH BRACING SHOWN

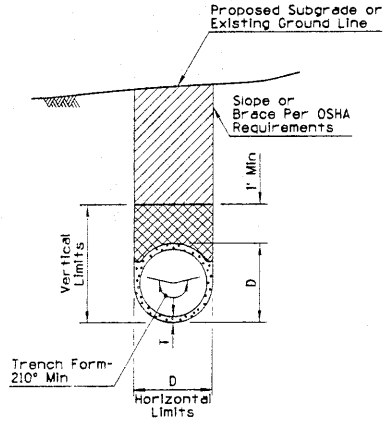

TRENCH CONDITION
NRCIPCP IN NATURAL GROUND
OR IN EMBANKMENT

GENERAL NOTES

1. Pipes shall be installed either in a trench condition or in a non-trench condition in natural ground or in embankment.
2. In a trench condition, the vertical and horizontal limits shall be maintained. If horizontal limits are exceeded or the vertical limits are not maintained, a non-trench condition exists.
3. Bracing and sloping shall conform to OSHA requirements.
4. Pipe backfill may be bedding material.
5. (1) In a non-trench condition, the embankment for pipe stability shall be constructed in lifts to the limits shown in the detail simultaneously with the bedding material and pipe backfill. If the contractor chooses to construct it as a trench condition, the embankment shall be constructed before excavating the trench.

D - Outside diameter of full circle pipe or outside dimension (span or rise) of arch, arch pipe, elliptical pipe.

T - Minimum wall thickness for NRCIPCP. See Plans.

(3) ▲ - D+6 inches each side minimum for diameters less than 4 feet.
D+2 feet maximum for diameters up to 4 feet.

D+1 foot each side minimum for diameters equal to or over 4 feet.
D+3 feet maximum for diameters 4 feet or over.

◐ - 6 inches except when on unyielding or unstable material. See standard specifications.

TRENCH BACKFILL

PIPE BACKFILL

BEDDING

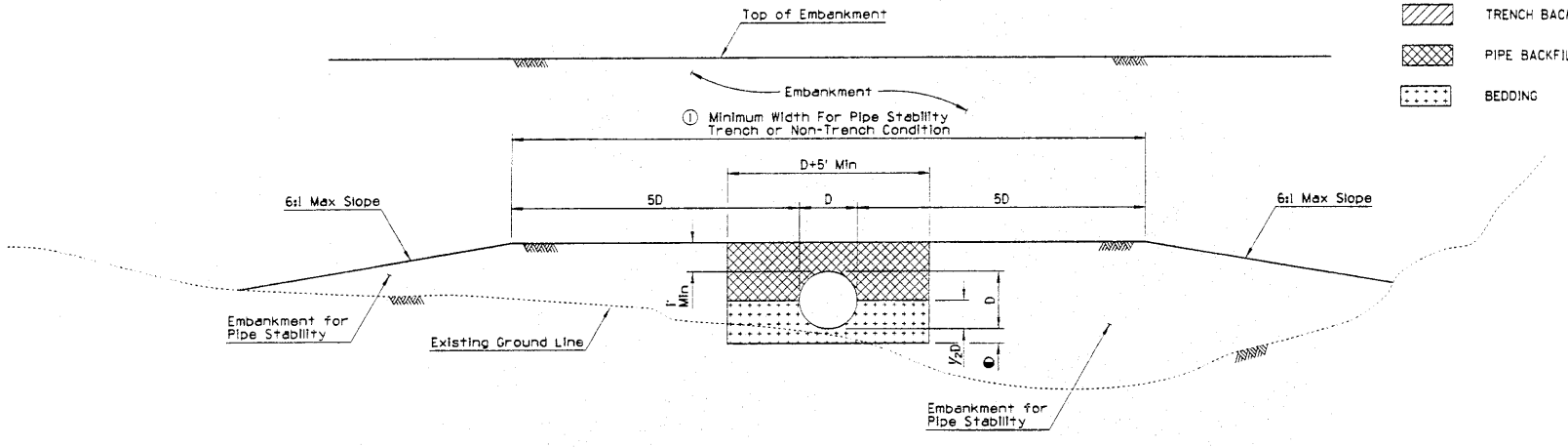

NON-TRENCH CONDITION

DESIGN APPROVED

APPROVED FOR DISTRIBUTION

STATE OF ARIZONA
DEPARTMENT OF TRANSPORTATION
DIVISION OF HIGHWAYS
STANDARD DRAWINGS

REV. 8/98

(2) TYPICAL PIPE INSTALLATION

DRAWING NO. C-13.15

NO	DESCRIPTION OF REVISIONS	MADE BY	DATE
1	CORRECTED SPELLING OF "EMBANKMENT"	PNB	10/95
2	DELETED DETAIL	BAF	7/97
3	DELETED TITLE AND SUBTITLE	BAF	7/97
4	DELETED RIVETS	BAF	7/97

NO	DESCRIPTION OF REVISIONS	MADE BY	DATE
5	MODIFIED DATA TABLE	BAF	6/98
6			
7			
8			

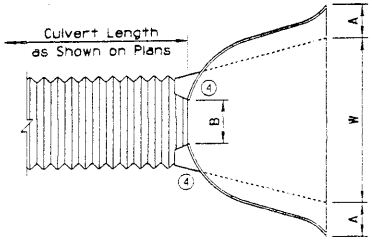

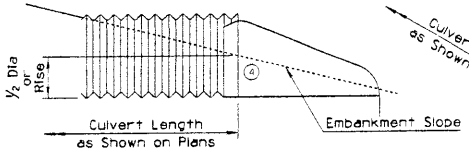

RIGHT ANGLE CULVERT

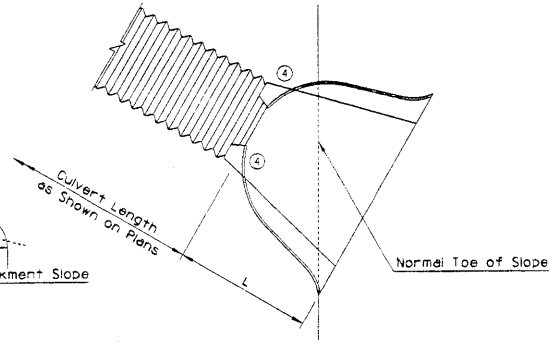

SKEWED CULVERT

GENERAL NOTES

1. The end section may be jointed to the pipe or connector section by bolts, rivets, dimpled bands, slip-seam bands or threaded rod type fasteners. For allowable connector types, see table.
2. The type 1 connector is by means of bolts or rivets. Maximum circumferential fastener spacing shall be 12" and with a minimum of 8 fasteners per joint. The type 1 joint may be used with either annular or helical corrugations.
3. Type 2 and 3 connectors shall be used only with annular or helical pipe with a requisite number of annular corrugations.
4. Type 4 and 5 connectors shall be only used with helical pipe.
5. All steel end section components shall be galvanized.
6. (1) Toe of embankment shall be warped to match toe of skewed end section.
7. A berm shall be added to abnormal projections per Std C-13.10.
8. The foregoing applies to all cross section configurations.

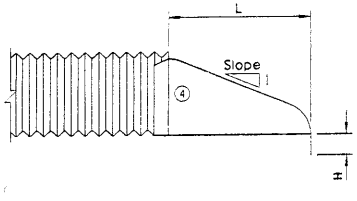

(3)

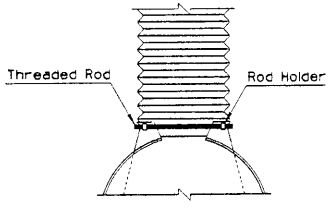

TYPE 2
THREADED ROD CONNECTIONS

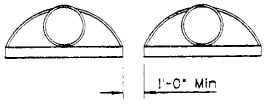

SPACING FOR MULTIPLE INSTALLATION

	Dimensions - Inches								
Pipe Dia	Ga	A ±1	B Max	H ±1	L ±1½	W ±2	Approx Slope	Connection Type	
18"	16	8	8	6	31	36	2½	2, 3, 4	(5)
24"	16	10	13	6	41	48	2½	2, 3, 4	(5)
30"	14	12¼	12½	8	51	57	2½	2, 4	(5)
36"	14	14½	12	9	60	72	2½	2, 4	(5)
42"	12	17	11	10½	69	84	2½	3	(5)

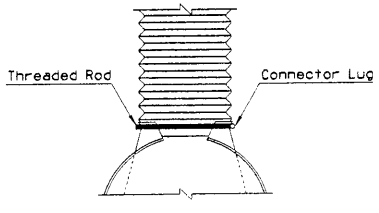

TYPE 3
THREADED ROD CONNECTIONS

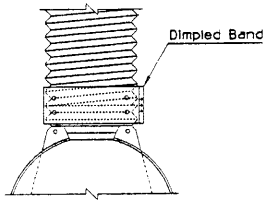

TYPE 4
DIMPLED BAND CONNECTIONS

(2)

	Dimensions - Inches									
Pipe Arch										
Span	Rise	Ga	A ±1	B Max	H ±1	L ±1½	W ±2	Approx Slope	Connection Type	
21"	15"	16	7½	11	6	24	36	2½	2, 3, 4	(5)
28"	20"	16	8	16	6	32	48	2½	2, 3, 4	(5)
35"	24"	14	10	16	6	39	60	2½	2, 4	(5)
42"	29"	14	12	12	7½	46	75	2½	2, 4	(5)
49"	33"	12	13½	20	9	53	84	2½	3	(5)

DESIGN APPROVED

APPROVED FOR DISTRIBUTION

STATE OF ARIZONA
DEPARTMENT OF TRANSPORTATION
DIVISION OF HIGHWAYS
STANDARD DRAWINGS

PIPE, CORRUGATED METAL
END SECTION

REV. 8/98

DRAWING NO. C-13.25

NO	DESCRIPTION OF REVISION-S	MADE BY	DATE
1	REVISED GENERAL NOTE	PNB	10/95
2	REVISED GENERAL NOTE	BAF	7/97
3			
4			

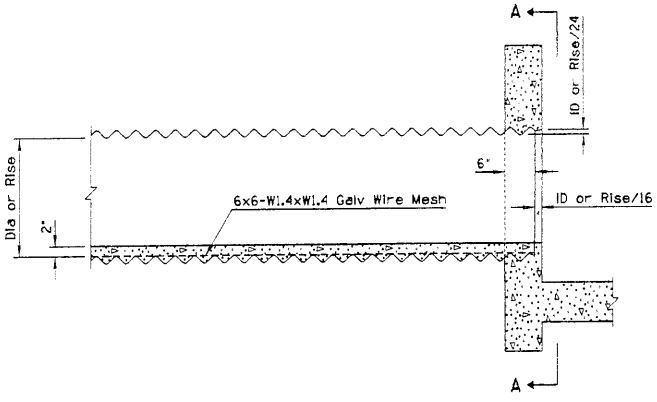

HEADWALL INSTALLATION

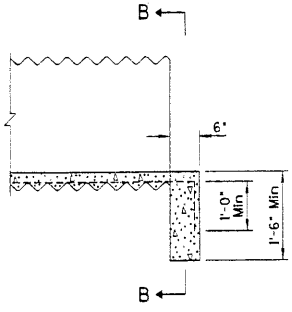

PROJECTING INSTALLATION

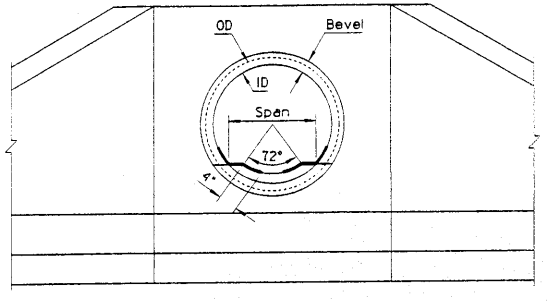

SECTION A-A

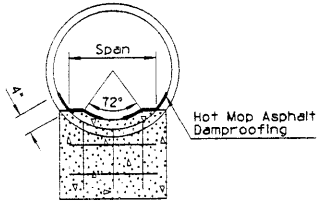

SECTION B-B

GENERAL NOTES

1. For lateral dimensions of invert paving, use 72° control for CMP and span for CMPA.
2. (1) Paving shall be scored laterally at 1'-6" minimum intervals along the length of the pipe.
3. Use bevel on inlet headwall only.
4. Wire mesh shall be fastened or welded to corrugation crests at intervals and in a manner approved by the Engineer. Laps shall be 6" minimum.
5. Paving shall not be placed until backfilling is completed.
6. Concrete shall be Class B.
7. (2) See Std B-11.12 for headwall and bevel dimensions not shown.

DESIGN APPROVED	STATE OF ARIZONA DEPARTMENT OF TRANSPORTATION DIVISION OF HIGHWAYS STANDARD DRAWINGS	REV. 8/98
APPROVED FOR DISTRIBUTION	PIPE AND PIPE ARCH, CORRUGATED METAL CONCRETE INVERT PAVING	DRAWING NO. C-13.30

NO.	DESCRIPTION OF REVISIONS	MADE BY	DATE
1	DELETED TYPE A CURB AND GUTTER	PMB	10/95
2	REVISED NOTE	BAF	7/97
3			
4			

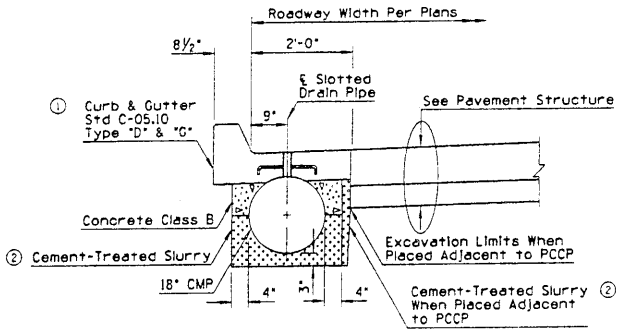

① TYPE D & G CURB AND GUTTER WITH SLOTTED DRAIN

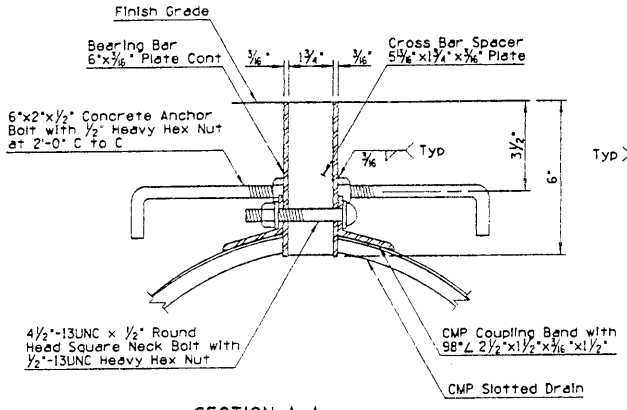

SECTION A-A

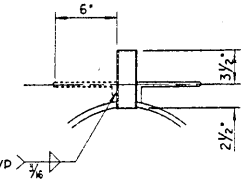

SECTION B-B

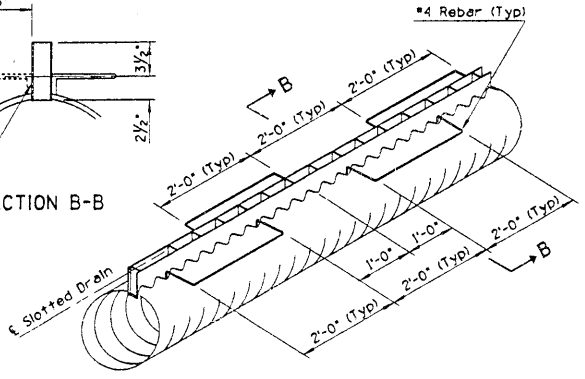

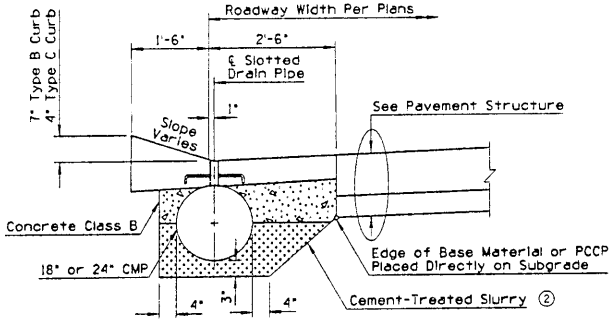

TYPE B OR C CURB AND GUTTER WITH SLOTTED DRAIN

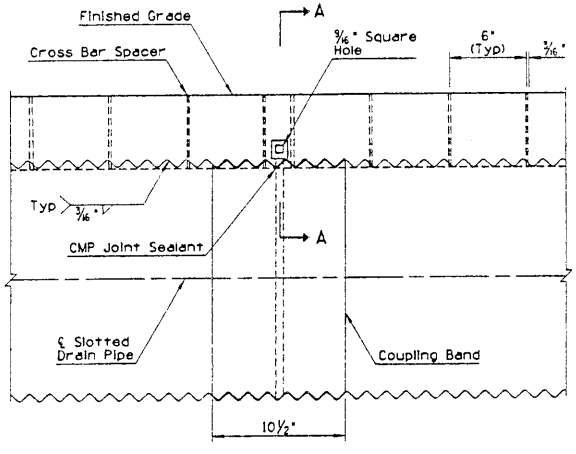

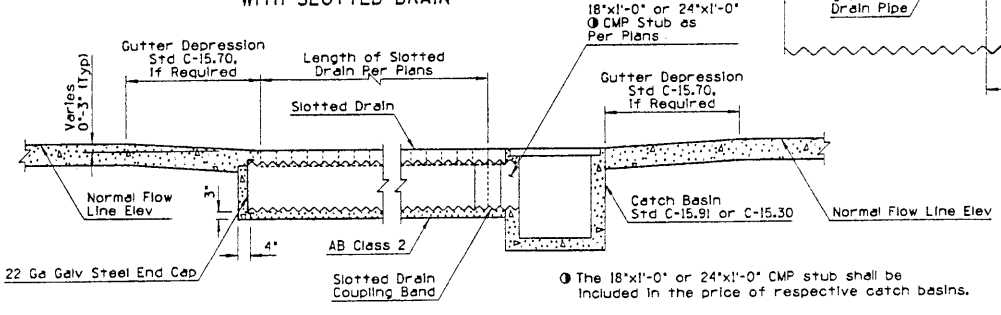

◑ The 18"x1'-0" or 24"x1'-0" CMP stub shall be included in the price of respective catch basins.

CONNECTION OF SLOTTED DRAIN TO CATCH BASIN AND SLOTTED DRAIN END CAP

GENERAL NOTES

1. Slotted drain pipe shall be 2⅔"x½" corrugated steel pipe with a minimum wall thickness of 0.064" and shall conform to the requirements of AASHTO M36.
2. All concrete shall be Class B.
3. Reinforcing steel shall conform to 1003-1, 2, Grade 40.
4. Structural steel shall conform to ASTM A36.
5. Concrete anchors shall conform to ASTM A307 and hex nuts shall conform to ASTM A563 Grade A.
6. All slotted drain pipe hardware except anchor bolts and reinforcing steel shall be given two coats of #1 paint.
7. When annular pipe is used, apply water proof sealer before attaching coupling band.
8. When helical pipe is used, it shall be formed with at least one annular corrugation at each end of each pipe section. Water proof sealer shall be applied to the annular corrugation prior to attachment of coupling band.
9. Cover slot during construction with removable tape or other acceptable substitute.
10. Slotted drain pipe shall be clean at the time of final acceptance.
11. Concrete curb and gutter thru the slotted drains shall be paid for under the respective curb and gutter items.
12. Refer to curb and gutter details for dimensions and details not shown.
13. Joints in concrete curb & gutter shall match adjoining PCCP and slotted drain bends.

DESIGN APPROVED	STATE OF ARIZONA DEPARTMENT OF TRANSPORTATION DIVISION OF HIGHWAYS STANDARD DRAWINGS	REV. 8/98
APPROVED FOR DISTRIBUTION	SLOTTED DRAIN DETAILS	DRAWING NO. C-13.60