STATE OF ARIZONA

DEPARTMENT OF TRANSPORTATION

CONSTRUCTION

5509 N. 7st.

JUNE Metric 1995

DIVISION OF HIGHWAYS

STANDARD DRAWINGS

31-079

June, 1995

TO: All Users of Construction Standards

FROM: Terry H. Otterness, Design Program Manager, Roadway Engineering Group

SUBJECT: New Metric Construction Standards

New Metric Construction Standard Drawings and Index have been completed and are hereby issued as a new document. Do not discard the existing non-metric version of the Construction Standard Drawings.

Unless otherwise noted on the standards, all length dimensions are in millimeters.

Slope designations for metric have changed from H:V (4:1, 6:1) to V:H (1:4, 1:6). For slopes steeper than 1:1, the horizontal component is unity. As an example, the old designation for a half to one slope (1/2:1) becomes 2:1.

There are two new standards, C-10.62 and C-10.71. Standard C-10.22 has a new second sheet that is a timber post alternate for the freeway guard rail.

One standard has been deleted: C-06.20 - Detour Geometrics.

Several standards have been revised in addition to conversion to metric. Major revisions include: revising gutter depression depths, eliminating Type A curb and gutter, clarifying gutter depression versus inlet depression at catch basins, revising reinforcing steel clearances and dimensions, and clarifying manhole frames and covers to match what vendors can supply.

Metric

CONSTRUCTION STANDARD - INDEX

DRAWING NO.	TITLE
C-01.10	SYMBOL LEGEND
C-01.11	SYMBOL LEGEND
C-01.12	SYMBOL LEGEND
C-01.13	SYMBOL LEGEND
C-01.30	GENERAL ABBREVIATIONS
C-01.31	GENERAL ABBREVIATIONS
C-01.32	GENERAL ABBREVIATIONS
C-02.10	SLOPES, INTERSTATE
C-02.20	SLOPES, PRIMARY ROADWAYS
C-02.30	SLOPES, SECONDARY/MISC ROADWAYS
C-02.50	SUPERELEVATION DISTRIBUTION
C 03.10	DITCHES, CHANNELS, DIKES AND BERMS (5 SHEETS)
C-04.10	SPILLWAY, EMBANKMENT
C-04.20	DOWNDRAIN, EMBANKMENT
C-04.30	SPILLWAY LENGTH TABLE
C-04.40	DOWNDRAIN LENGTH TABLE
C-04.50	DOWNDRAIN ENERGY DISSIPATOR
C-05.10	SINGLE CURB, CURB & GUTTER EMBANKMENT CURB
C-05.11	RAMP CURB & GUTTER LAYOUT (2 SHEETS)
C-05.12	CURB & GUTTER TRANSITIONS (3 SHEETS)
C-05.20	CONCRETE DRIVEWAYS & SIDEWALKS (2 SHEETS)
C-05.30	SIDEWALK RAMP (4 SHEETS)
C-05.40	MEDIAN PAVING AND NOSE TRANSITION
C-05.50	CONCRETE BUS BAY
C-06.10	DRIVEWAY & TURNOUT LAYOUTS (2 SHEETS)
C-07.01	PCCP JOINTS (2 SHEETS)
C-07.02	LOAD TRANSFER DOWEL ASSEMBLY
C-07.03	MAINLINE PCCP JOINT LOCATIONS (8 SHEETS)
C-07.04	ENTRANCE RAMP PCCP JOINTS
C-07.05	EXIT RAMP PCCP JOINTS
C-07.06	TRENCH BACKFILL AND PAVEMENT REPLACEMENT
C-07.10	CROSSROAD PCCP JOINTS
C-08.10	RAMP GEOMETRICS-SINGLE LANE RAMPS
C-08.20	PAVED GORE AREA
C-09.10	GROOVING FOR BITUMINOUS SHOULDERS

DRAWING NO.	TITLE
C-10.01	TYPE A GUARD RAIL INSTALLATION, REFLECTOR TAB
C-10.02	TYPE B GUARD RAIL INSTALLATION, REFLECTOR TAB
C-10.03	MEASUREMENT LIMITS FOR W BEAM AND THRIE BEAM SYSTEM (2 SHEETS)
C-10.06	HALF BARRIER TERMINAL W/TYPE B OR C CURB & GUTTER
C-10.15	BARRIER DETAILS AT PIERS
C-10.20	G4(1W) AND G4(2W) BLOCKED OUT W BEAM (TIMBER POST)
C-10.21	G4(1S) AND G4(2S) BLOCKED OUT W BEAM (STEEL POST)
C-10.22	G4(MODIFIED) BLOCKED OUT W BEAM WITH SPECIAL CURB AND GUTTER (2 SHEETS)
C-10.23	G9(A) AND G9(B) BLOCKED OUT THRIE BEAM (STEEL POST)
C-10.24	G9(C) BLOCKED OUT THRIE BEAM (STEEL POST)
C-10.28	NESTED STEEL W BEAM (2 SHEETS)
C-10.29	BOLTED ANCHOR GUARD RAIL (2 SHEETS)
C-10.30	GUARD RAIL TRANSITION, W BEAM TO CONCRETE HALF BARRIER (APPROACH) (3 SHEETS)
C-10.31	GUARD RAIL TRANSITION, W BEAM TO CONCRETE HALF BARRIER (APPROACH) (WITH CURB) (3 SHEETS)
C-10.32	GUARD RAIL TRANSITION, W BEAM TO CONCRETE HALF BARRIER (DEPARTURE) (3 SHEETS)
C-10.39	HARDWARE FOR W BEAM TRANSITION TO CONCRETE BARRIER
C-10.40	GUARD RAIL EXTRUDER TERMINAL, GET-1 (2 SHEETS)
C-10.41	GUARD RAIL EXTRUDER TERMINAL, GET-2 (2 SHEETS)
C-10.44	HARDWARE FOR GUARD RAIL EXTRUDER TERMINAL (3 SHEETS)
C-10.45	GUARD RAIL ANCHOR ASSEMBLY STEEL TERMINAL POST
C-10.60	HALF BARRIER, CAST IN PLACE, SLIP FORM & FIXED FORM
C-10.61	HALF BARRIER, PRECAST
C-10.62	CONCRETE HALF BARRIER WITH GUTTER
C-10.64	HALF BARRIER (AT PIERS) 2 SHEETS)
C-10.65	HALF BARRIER WITH SIDEWALK
C-10.66	MEDIAN BARRIER, CAST IN PLACE, SLIP FORM & FIXED FORM
C-10.68	MEDIAN BARRIER, PRECAST
C-10.70	CONCRETE HALF BARRIER TRANSITION (4 SHEETS)
C-10.71	CONCRETE HALF BARRIER TRANSITION (3 SHEETS)
C-10.74	HARDWARE FOR CONCRETE BARRIER TRANSITIONS
C-10.75	BARRIER TRANSITION-TANGENT-DEPARTURE TYPES 1, 2, AND 3 (3 SHEETS)
C-10.76	BARRIER TRANSITION-CURVE
C-10.80	RUB RAIL (2 SHEETS)
C-10.83	HARDWARE FOR RUB RAIL
C-10.97	GLARE SCREEN, CONCRETE MEDIAN BARRIER (3 SHEETS)
C-11.10	ROADWAY CATTLE GUARD (3 SHEETS)
C-11.20	CATTLE GUARD, DRAINAGE
C-11.30	CATTLE GUARD, RAILROAD
C-12.10	FENCE, WOVEN AND BARBED WIRE WITH GATES (5 SHEETS)
C-12.20	FENCE, CHAIN LINK TYPES 1 AND 2 WITH GATES (3 SHEETS)
C-12.30	CHAIN LINK CABLE BARRIER (3 SHEETS)

Metric

CONSTRUCTION STANDARD - INDEX

DRAWING NO.	TITLE
C-13.10	PIPE CULVERT INSTALLATION (2 SHEETS)
C-13.15	TYPICAL PIPE INSTALLATION
C-13.20	PIPE, REINFORCED CONCRETE END SECTION
C-13.25	PIPE, CORRUGATED METAL, END SECTION
C-13.30	PIPE & PIPE ARCH, CORRUGATED METAL CONCRETE INVERT PAVING
C-13.55	PIPE, CATTLE-VEHICLE PASS, MITERED END TREATMENT
C-13.60	SLOTTED DRAIN DETAILS
C-13.65	SLOTTED DRAIN INSTALLATION DETAILS
C-13.70	STORM DRAIN CONNECTION DETAILS
C-13.75	STORM DRAIN OUTLET DETAILS (2 SHEETS)
C-13.80	PIPE COLLAR DETAILS
C-15.10	CATCH BASIN, TYPE 1
C-15.20	CATCH BASIN, TYPE 3
C-15.30	CATCH BASIN, TYPE 4
C-15.40	CATCH BASIN, TYPE 5
C-15.50	CATCH BASIN, GRATES, LONGITUDINAL BARS
C-15.60	CATCH BASIN, GRATES, TRANSVERSE BARS
C-15.70	CATCH BASIN MISC. DETAILS
C-15.75	CATCH BASIN, DROP INLET
C-15.80	CATCH BASIN, MEDIAN FLUSH
C-15.81	CATCH BASIN, MEDIAN, SIDE SLOPE
C-15.90	CATCH BASIN, MEDIAN DIKE, PRECAST
C-15.91	FREEWAY CATCH BASIN DETAILS (2 SHEETS)
C-15.92	SPECIAL CATCH BASIN WITH HALF BARRIER
C-16.10	IRRIGATION HEADWALLS 460 TO 1520 mm DIAMETER PIPES
C-16.20	IRRIGATION STANDPIPES
C-16.30	IRRIGATION VALVE AND GATE
C-16.40	IRRIGATION SLEEVES
C-17.10	BANK PROTECTION, RAIL TYPES 1, 2 & 3
C-17.20	BANK PROTECTION, RAIL TYPES 4, 5 & 6

DRAWING NO.	TITLE
C-18.10	MANHOLE DETAILS
C-18.20	MANHOLE FRAME & COVER DETAILS
C-18.30	MISCELLANEOUS MANHOLE DETAILS
C-18.40	MANHOLE RISER DETAILS
C-19.10	FORD - CONCRETE WALLS
C-19.20	FORDS - TYPES 1 & 2
C-21.10	SURVEY MONUMENT, FRAME AND COVER, RIGHT OF WAY MARKER
C-21.20	STANDARD MARKER
C-22.10	UTILITY LINE, PROTECTIVE CONCRETE SLAB
C-22.15	SANITARY SEWER ENCASEMENT
C-22.20	PIPE SUPPORT ACROSS TRENCHES (3 SHEETS)
C-22.25	PRECAST SANITARY SEWER MANHOLES
C-22.30	STUB OUT AND PLUG
C-22.35	DROP SEWER CONNECTIONS
C-22.40	SEWER CLEANOUT
C-23.10	THRUST BLOCKS FOR WATER LINES
C-23.15	BLOCKING FOR WATER VALVES GATE AND BUTTERFLY
C-23.20	ANCHOR BLOCK FOR VERTICAL BENDS
C-23.25	VERTICAL REALIGNMENT FOR WATER MAINS
C-23.30	VALVE BOX INSTALLATION (2 SHEETS)
C-23.35	TAPPING SLEEVE AND VALVE INSTALLATION
C-23.40	JOINT RESTRAINT WITH TIE RODS
C-23.45	CONCRETE WATER METER BOX
C-23.50	STEEL COVER FOR WATER METER BOX
C-23.55	WATERLINE-CUT AND PLUG 300 mm DIA. MAIN AND SMALLER
C-23.60	HYDRANT INSTALLATION
C-23.65	FIRE HYDRANT LOCATIONS

NO	DESCRIPTION OF REVISIONS	MADE BY	DATE

Metric

CONSTRUCTION DRAWING SYMBOLS

	NEW FEATURES	EXISTING FEATURES
City Limits		
County Line		
Forest or Reservation Boundry		
Property Line		
Mid Section or Quarter Section Line		
Right of Way Line		
Section Line		
Sixteenth Line		
National, State Boundry		
Township or Range Line		
Temporary Construction Easement		
Mile Post Marker	MP	MP
Right of Way Marker		
Survey Monument		
Angle Point or PI		
Centerline, Station Marks		
Quarter Corner		

CONSTRUCTION DRAWING SYMBOLS

	NEW FEATURES	EXISTING FEATURES
Section Corner		
Survey Control Point		
Bench Mark		
Access Control		
Sidewalk, Curb & Gutter w/Depressed Curb (1:500 or larger)	9 DC	
Curb & Gutter with Depressed Curb (1:1000)	+251.4	
Curb, Single with Depressed Area		
Pavement and Sidewalk Edge		
Turnout	R	R
Top of Cut	C C	
Toe of Fill	F F	
Transition, Cut to Fill	C F	
Railroad Track (1:500 or larger)		
Railroad Track (1:1000)		
Bank Protection	XXXXXXXXXXXX	XXXXXXXXXXXX
Bridge		
Building	Floor Elevation 605.085	Floor Elevation 605.085

DESIGN APPROVED APPROVED FOR DISTRIBUTION	STATE OF ARIZONA DEPARTMENT OF TRANSPORTATION DIVISION OF HIGHWAYS STANDARD DRAWINGS	ISSUE 6/95
	SYMBOL LEGEND	DRAWING NO. C-01.10

Metric

NO	DESCRIPTION OF REVISIONS	MADE BY	DATE

Metric

CONSTRUCTION DRAWING SYMBOLS

	NEW FEATURES	EXISTING FEATURES
Catch Basin, Curb & Gutter		
Catch Basin, Median Dike		
Catch Basin, Off Roadway, Flush		
Catch Basin, Single Curb		
Cattle Guard		
Concrete Box Culvert		
Dike, Median		
Dike		
Downdrain, one way	+137.2 10.8	
Downdrain, two way	+137.2 10.8	
Manhole		
Manhole, Frame & Cover, Reset		
Retaining Wall		
Rock Riprap		
Spillway, one way	+137.2 10.8	
Spillway, two way	+137.2 10.8	

CONSTRUCTION DRAWING SYMBOLS

	NEW FEATURES	EXISTING FEATURES
Straight Hdwl w/End Sct, Pipe (1:200) (All Dia)		
Straight Hdwl w/End Sct, Pipe (1:500 or smaller) (Dia=1.050 and larger)		
Straight Hdwl w/End Sct, Pipe (1:500 or smaller) (Dia=0.900 and smaller)		
"U" Hdwl w/End Sct, Pipe (1:200) (All Dia)		
"U" Hdwl w/End Sct, Pipe (1:500 or smaller) (Dia=0.900 and larger)		
"U" Hdwl w/End Sct, Pipe (1:500 or smaller) (Dia=1.050 and smaller)		
Wing Hdwl w/End Sct, Pipe (1:200) (All Dia)		
Wing Hdwl w/End Sct, Pipe (1:500 or smaller) (Dia=1.050 and larger)		
Wing Hdwl w/End Sct, Pipe (1:500 or smaller) (Dia=0.900 and smaller)		
"L" Hdwl w/End Sct, Pipe (1:200) (All Dia)		
"L" Hdwl w/End Sct, Pipe (1:500 or smaller) (Dia=1.050 and larger)		
"L" Hdwl w/End Sct, Pipe (1:500 or smaller) (Dia=0.900 and smaller)		
Pipe Ext W/End Sct & Berm (1:200) (All Dia)		
Pipe Ext W/End Sct & Berm (1:200) (1:500 or smaller) (Dia=1.050 and larger)		
Pipe Ext W/End Sct & Berm (1:200) (1:500 or smaller) (Dia=0.900 and smaller)		
Pipe Ext W/End Sct Roadway Widening (1:200)	F F	

DESIGN APPROVED	STATE OF ARIZONA DEPARTMENT OF TRANSPORTATION DIVISION OF HIGHWAYS STANDARD DRAWINGS	ISSUE	
APPROVED FOR DISTRIBUTION	SYMBOL LEGEND	DRAWING NO.	C-01.11

Metric

NO.	DESCRIPTION OF REVISIONS	MADE BY	DATE
1			
2			
3			
4			

Metric

CONSTRUCTION DRAWING SYMBOLS

	NEW FEATURES	EXISTING FEATURES
Plan View, Bituminous Pavement		
Plan View, Concrete Pavement		
Plan View, Graded Surface		
Plan View, Obliterate Pavement		
Plan View, Wood		
Section, Asphaltic Concrete Friction Course		
Section, Bituminous Pavement		
Section, Concrete		
Section, Metal		
Section, Wood		
Section, Aggregate Base		
Section, Ground Line		
Ground Line Profile		
Barbed Wire Fence & Gate		
Chain Link Fence & Gate		
Guard Rail & Breakaway Cable Terminal		
Guard Rail & Guard Rail Extruder Terminal		
Gas Line	—G 760 G—	—G 760 G—

CONSTRUCTION DRAWING SYMBOLS

	NEW FEATURES	EXISTING FEATURES
Irrigation Ditch, Concrete	IR IR	IR IR
Irrigation Ditch, Earth	IR IR	IR IR
Irrigation Line (1:200)	IR 610 IR	IR 610 IR
Irrigation Line (1:1000)	IR 610 IR	IR 610 IR
Overhead Power/Joint Use Line	OP OP	OP OP
Overhead Telephone Line	OT OT	OT OT
Sanitary Sewer (1:200)	S 200 S	S 200 S
Sanitary Sewer (1:1000)	S 200 S	S 200 S
Storm Drain (1:200) & (1:500)		SD 610 SD
Storm Drain (1:1000)		SD 910 SD
Street Light and With Mast Arm		
Telephone/Power Pedestal	T P	T P
Utility Pole with Down Guy and Anchor		
Underground Power/Joint Use Line	P P	P P
Underground Telephone Line	T T	T T
Water/Gas Meter Box	WM GM	WM GM
Water/Gas Valve	WV GV	WV GV

DESIGN APPROVED: Terry H. Otterness

APPROVED FOR DISTRIBUTION: Ronald A. Williams

STATE OF ARIZONA
DEPARTMENT OF TRANSPORTATION
DIVISION OF HIGHWAYS
STANDARD DRAWINGS

ISSUE: 6/95

SYMBOL LEGEND

DRAWING NO. C-01.12

Metric

NO.	DESCRIPTION OF REVISIONS	MADE BY	DATE
1			
2			
3			
4			

Metric

CONSTRUCTION DRAWING SYMBOLS

	NEW FEATURES	EXISTING FEATURES
Water Line	W 200 W	W 200 W
Drainage Channel		
Drainage Ditch	Drainage Ditch	Drainage Ditch
Major Wash		NAME
Minor Wash		
℄ Grade, Profile		
Hedge		
Palm Tree		
Shrubbery		
Unclassified Tree		
Sign, Single Post		
Sign, Multiple Post		
Dimensions		
Visible Outlines, Sections, etc...		
Index Contour Line	2630	2630
Intermediate Contour Line		

CONSTRUCTION DRAWING SYMBOLS

	NEW FEATURES	EXISTING FEATURES
Depressed Index Contour Line	2630	2630
Depressed Intermediate Contour Line		
Block Wall (1:200)		
Median Barrier		
Fire Hydrant	FH	FH
Standpipe		SP
Transmission Tower		
Windmill		
Mail Box		
Flag Pole		
North Arrow		N

DESIGN APPROVED: Terry H. Otterness

APPROVED FOR DISTRIBUTION: Donald A. Williams

STATE OF ARIZONA
DEPARTMENT OF TRANSPORTATION
DIVISION OF HIGHWAYS
STANDARD DRAWINGS

ISSUE: 6/95

SYMBOL LEGEND

DRAWING NO. C-01.13

Metric

NO	DESCRIPTION OF REVISIONS	MADE BY	DATE

Metric

WORDS	ABBREVIATION
A	
Abutment	Abt
Acceleration	Acc
Aggregate	Agg
Aggregate Base	AB
Ahead	AHD, Ahd
Alternate	Alt
Aluminum	Al
American Association of State Highway and Transportation Officials	AASHTO
American Concrete Institute	ACI
American Institute of Steel Construction	AISC
American Road and Transportation Builders Association	ARTBA
American Society for Testing Materials	ASTM
Amount	Amt
Approach	Appr
Approximate	Approx
Asphalt	Asph
Asphalt Rubber	AR
Asphalt Rubber ACFC	ARACFC
Asphaltic Concrete	AC
Asphaltic Concrete Base	ABC
Asphaltic Concrete Friction Course	ACFC
Asphaltic Concrete Surface Course	ACSC
Avenue	AVE, Ave
Average Daily Traffic	ADT
B	
Back	BK, Bk
Backfill	Bkfl
Balance	Bal
Bank Protection	Bank Prt
Barbed Wire	BW
Bearing	Brg
Begin	Bgn
Begin Curb Return	BCR
Begin Full Superelevation	BFS
Bench Mark	BM
Bevel or Beveled	Bev
Bituminous	Bit
Bituminous Mixture	Bit Mix

WORDS	ABBREVIATION
B (cont)	
Bituminous Surface Treatment	BST
Bituminous Treated Base	BTB
Black Steel Pipe	BSP
Borrow	Bor
Boulevard	BLVD, Blvd
Boundary	Bdry
Brass Cap	BC
Breakaway Cable Terminal	BCT
Bridge	Br
Building	Bldg
C	
Calculated	Calc
Cast-in-Place	C-I-P
Cast Iron	CI
Cast Iron Pipe	CIP
Catch Basin	CB
Cattle Guard	CG
Cement	Cem
Cement Treated Base	CTB
Center	Ctr
Center Line	℄
Center to Center	C to C
Channel	Chan
Class	Cl
Clear	Clr
Column	Col
Compact or Compaction	Comp
Complete in Place	C in P
Concrete	Conc
Concrete Box Culvert	CBC
Concrete Treated Base	CTB
Connection	Conn
Conduit	Cond
Construct or Construction	Cst
Continous	Cont
Coordinate	Coord
Corner	Cor
Correction	Corr
Corrugated Aluminum Pipe	CAP
Corrugated Aluminum Pipe Arch	CAPA

WORDS	ABBREVIATION
C (cont)	
Corrugated High Density Polyethelene Plastic Pipe	CHDPEPP
Corrugated Steel Pipe	CSP
Corrugated Steel Pipe Arch	CSPA
County	Co
Crossing	X-ING
Cross Section	X-SECT
Crown	Cr
Cubic	Cu
Cubic Meters Per Second	m^3/s
Cubic Meter or Cubic Meters	m^3
Culvert	Culv
Curb and Gutter	C&G
Curve to Spiral	CS
D	
Deceleration	Dcl
Deflection	Def
Deflection of Total Curve	I
Delineator	Del
Delta	Δ
Depressed Curb	DC
Design Speed	Des Spd
Detail	Dtl
Diameter	Dia
Distance	Dist
Division	Div
Double	Dbl
Drain or Drainage	Drn
Drainage Area	DA
Drawing	Dwg
Drive	Dr
Driveway	Dwy
Ductile Iron Pipe	DIP
E	
Each	Ea
Easement	Esmt
East	E
Eastbound	EB

DESIGN APPROVED Terry H. Otterness	STATE OF ARIZONA DEPARTMENT OF TRANSPORTATION DIVISION OF HIGHWAYS STANDARD DRAWINGS	ISSUE 6/95
APPROVED FOR DISTRIBUTION Ronald Williams	GENERAL ABBREVIATIONS	DRAWING NO. C-01.30

Metric

NO	DESCRIPTION OF REVISIONS	MADE BY	DATE
1			
2			
3			
4			

Metric

WORDS	ABBREVIATION
E (cont)	
Edge of Pavement	EP
Electric, Electricity	Elec, E
Elevation	Elev
Embankment	Emb
End Curb Return	ECR
End Full Superelvation	EFS
Engineer	Engr
Entrance	Ent
Equation	EQ, Eq
Estimate	Est
Excavation	Exc
Existing	Exst
Expansion Joint	Exp Jt
Extend or Extension	Ext
External	Ext
F	
Federal	Fed
Figure	Fig
Finish	Fin
Floor	Fl
Flow Line	FL
Footing	Ftg
Forest	Fst
Found	Fnd
Frame	Fr
Freeway	Fwy
Frontage	Frt
Furnish or Furnished	Furn
Future	Fut
G	
Gas	G
Gas Meter	GM
Gas Valve	GV
Galvanize or galvanized	Galv
Gauge	Ga
Government	Gov't
Grade	Gr
Grade Seperation	GS
Ground	Gnd
Ground Compaction	Gnd Comp
Grubbing	Grb
Guard	Grd

WORDS	ABBREVIATION
G (cont)	
Guard Rail	GR
Guard Rail Extruder Terminal	GET
H	
Headwall	Hdwl
Hectare	ha
Height	Ht, H, h
Height of Instrument	HI
Head Water	HW
Highway	Hwy
Horizontal	Horz
Horizontal Elliptical Reinforced Concrete Pipe	HERCP
I	
Improvement	Impr
Include, Included or Inclusive	Incl
Inside Diameter	ID
Invert	Inv
Irrigation	Irr
J	
Joint	Jt
Junction	Jct
K	
Kilograms	kg
Kilometer	km
Kilometer Post	KP
Kilometer Per Hour	km/h
L	
Laboratory	Lab
Lateral	Lat
Left	Lt
Length or Length of Curve	L
Length of Normal Crown Removal	L_c
Length of Spiral	Ls
Length of Superelevation Runoff	L_s
Line	Ln
Linear or Lineal	Lin
Linear Feet	Lin Ft
Location	Loc
M	
Manhole	MH
Material	Mtl
Maximum	Max
Median	Med

WORDS	ABBREVIATION
M (cont)	
Mega Pascal	MPa
Meter	m
Meters Per Second	m/s
Millimeter or Millimeters	mm
Mile Post	MP
Mineral Aggregate	MA
Minimum	Min
Miscellaneous	Misc
Modify or Modified	Mod
Monument	Mon
Mountain	Mt
N	
National	Nat'l
Newton·Meter	N·m
Non-Reinforced Cast-In-Place Concrete Pipe	NRCIPCP
Non-Reinforced Concrete Pipe	NRCP
Normal Crown	NC
North	N
Northbound	NB
Number	No
O	
Obliterate	Obl
Original	Orig
Outside Diameter	OD
Overhead	OH
Overpass	OP
P	
Parkway	Pkwy
Pascal	Pa
Pavement	Pvmt
Pedestrian	Ped
Place	Pl
Point	Pt
Point of Compound Curvature	PCC
Point of Curvature	PC
Point of Intersection	PI
Point of Reverse Curvature	PRC

DESIGN APPROVED Terry H. Otterness	STATE OF ARIZONA DEPARTMENT OF TRANSPORTATION DIVISION OF HIGHWAYS STANDARD DRAWINGS	ISSUE 6/95
APPROVED FOR DISTRIBUTION Ronald Williams	GENERAL ABBREVIATIONS	DRAWING NO. C-01.31

Metric

NO	DESCRIPTION OF REVISIONS	MADE BY	DATE
1			
2			
3			
4			

Metric

WORDS	ABBREVIATION
P (cont)	
Point of Tangency	PT
Point on Curve	POC
Point on Semi-Tangent	POST
Point on Spiral	POS
Point on Tangent	POT
Polyethylene	PE
Polyvinyl Chloride	PVC
Portland Cement Concrete	PCC
Portland Cement Concrete Pavement	PCCP
Preliminary	Prelim
Prestress, Prestressed or Prestressing	PS
Project	Prj
Property Line	P/L
Proposed	Prop
Protection	Prt
Provision or Provide	Prv
Q	
Quadrant	Quad
Quantity or Quantities	Quan
Quantity of Drainage Runoff	Q
R	
Radius	R
Railroad	RR
Range	R
Reconstruct	Recst
Reference	Ref
Reinforced or Reinforcing	Reinf
Reinforced Concrete	RC
Reinforced Concrete Pipe	RCP
Reinforced Concrete Pipe Arch	RCPA
Reinforcing Bar	Rebar
Relocate, Relocation or Relocated	Reloc
Remove	Rem
Required	Reqd
Reservation	Resv
Residence	Res
Retain or Retaining	Ret
Revised or Revision	Rev
Right	Rt
Right of Way	R/W

WORDS	ABBREVIATION
R (cont)	
Road	Rd
Roadway	Rdwy
Route	Rte
Rubber Gasket Reinforced Concrete Pipe	RGRCP
S	
Salvage	Salv
Section	Sct
Select Material	SM
Sheet	Sh
Shoulder	Shldr
Shrinkage	Shr
Sidewalk	Swlk
Sight Distance-Stopping	SD_S
Single	Sgl
Skew	Sk
South	S
Southbound	SB
Special	Spcl
Specification	Spec
Spiral To Curve	SC
Spiral To Tangent	ST
Square	Sq
Square Meter	m^2
Square Millimeter	mm^2
Standard	Std
State Route	SR
Station	Sta
Street	St
Structure or Structural	Str
Subdivision	Subdiv
Subgrade	SG
Subgrade Seal	SS
Superelevation	e or Super
Surface	Surf
Survey	Sur
Swell	Sw
Symmetrical	Sym
T	
Tangent	Tan
Tangent Length	T

WORDS	ABBREVIATION
T (cont)	
Tangent to Spiral	TS
Telegraph	Tlg
Telephone	Tel
Temporary	Temp
Temporary Construction Easement	TCE
Timber	Tbr
Top of Curb	TC
Topography	Topo
Township	T
Traffic Interchange	TI
Transition	Trns
Turning Point	TP
Turnout	TO
Typical	Typ
U	
Underground	Ugnd
Underpass	UP
V	
Variable	Var
Vertical	Vert
Vertical Curve	VC
Vertical Elliptical Reinforced Concrete Pipe	VERCP
Vertical Point of Intersection	VPI
Viaduct	Via
Vitrified Clay Pipe	VCP
Volume	Vol
W	
Water	W
Water Meter	WM
Water Valve	WV
Welded Wire Fabric	WWF
West	W
Westbound	WB
Western Wood Products Association	WWPA
Wide or Width	W
Wood	Wd

DESIGN APPROVED	STATE OF ARIZONA DEPARTMENT OF TRANSPORTATION DIVISION OF HIGHWAYS STANDARD DRAWINGS	ISSUE
Terry H Otterness		6/95
APPROVED FOR DISTRIBUTION Donald A Williams	GENERAL ABBREVIATIONS	DRAWING NO. C-01.32

Metric

NO	DESCRIPTION OF REVISIONS	MADE BY	DATE

Metric

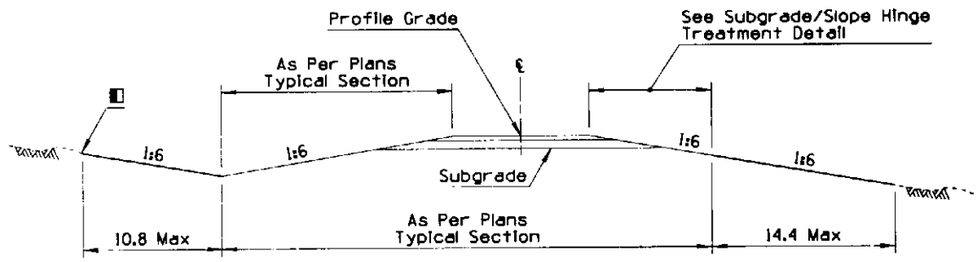

MINIMUM SLOPES

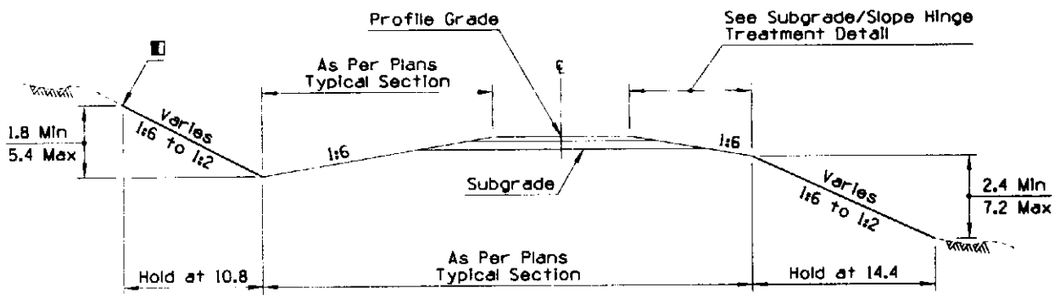

INTERMEDIATE SLOPES

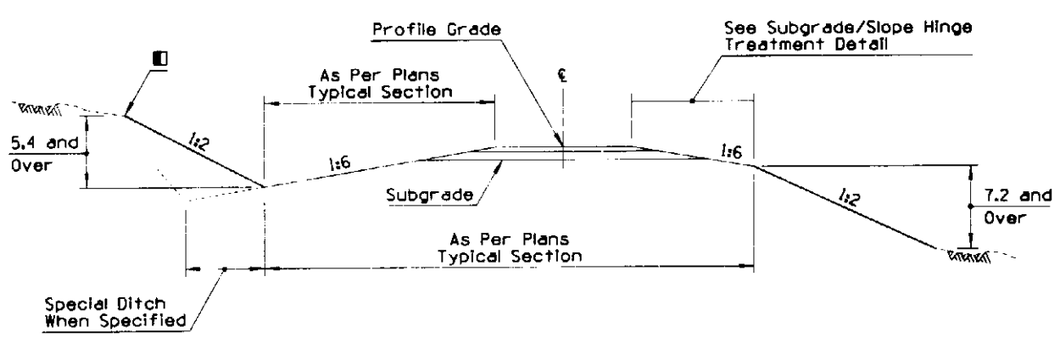

MAXIMUM SLOPES

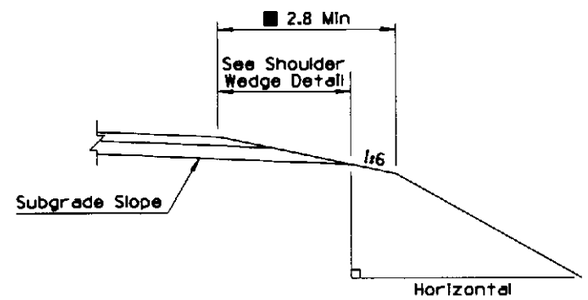

SUBGRADE/SLOPE HINGE TREATMENT DETAIL

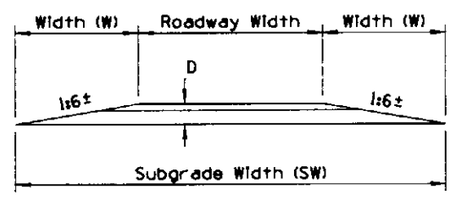

W = D x Slope (1:6)
D = Str Sec Depth (m) excluding ACFC
SW = 2 x W + Roadway Width

SHOULDER WEDGE DETAIL

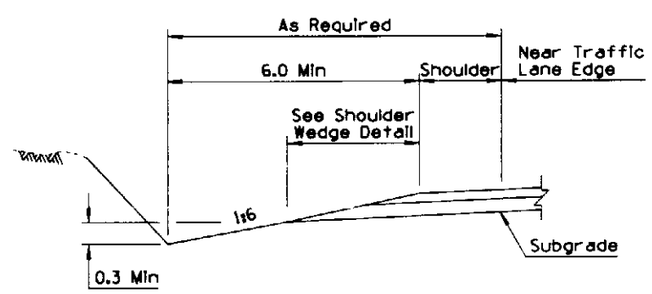

MINIMUM DITCH CONDITIONS DETAIL

GENERAL NOTES

1. Roadway width, cut ditch width, cross slope, and pavement structure section will be shown on project plans.
2. Design highwater should not be located above the subgrade in unpaved ditch.
3. Pavement structure slope is nominal. Actual slope is controlled by (D). See Shoulder Wedge Detail.
4. Slopes beyond the pavement structure, such as embankment and cut slopes, are relative to horizontal.
5. For slope controls within interchange areas, see project plans.
6. When median slopes intersect, see project plans for controls.
7. These slopes are intended to be used with new or reconstructed roadways.

■ The 2.8 m min is required when guard rail is utilized on the project. Treatment shall be uniform throughout the project length. The 2.8 m requirement may be waived under special conditions where guard rail is not utilized. The 2.8 m min shall not be waived when the thickness of structure section has not been finalized.

All dimensions are in meters.

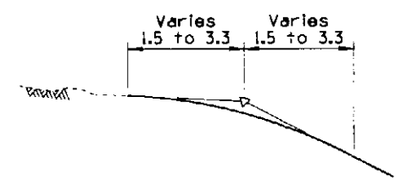

◧ SLOPE ROUNDING DETAIL

Except in solid rock, or as directed by the Engineer, the intersection of roadway cut slopes with the ground surfaces shall be rounded. For cuts up to 1.8 m, use 1.5 m semi-tangents for slope rounding. For each additional 0.3 m of cut add 0.3 m to semi-tangent to 3.3 m maximum.

DESIGN APPROVED	STATE OF ARIZONA DEPARTMENT OF TRANSPORTATION DIVISION OF HIGHWAYS STANDARD DRAWINGS	ISSUE 6/95
APPROVED FOR DISTRIBUTION	SLOPES INTERSTATE	DRAWING NO. C-02.10

Metric

NO.	DESCRIPTION OF REVISIONS	MADE BY	DATE
1			
2			
3			
4			

Metric

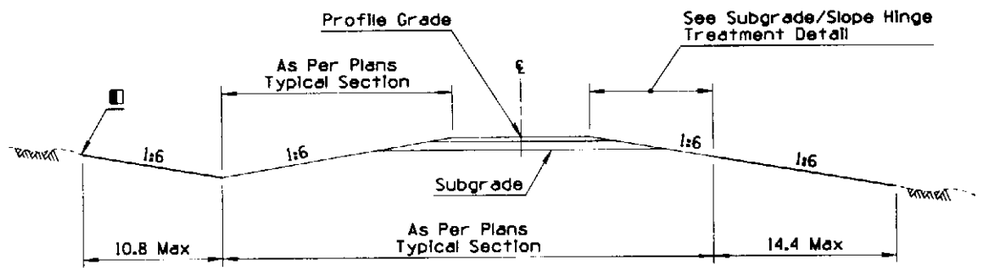

MINIMUM SLOPES

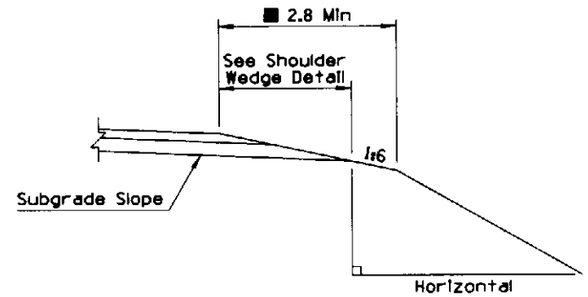

SUBGRADE/SLOPE HINGE TREATMENT DETAIL

GENERAL NOTES

1. Roadway width, cut ditch width, cross slope, and pavement structure section will be shown on project plans.
2. Design highwater should not be located above the subgrade in unpaved ditch.
3. Pavement structure slope is nominal. Actual slope is controlled by (D). See Shoulder Wedge Detail.
4. Slopes beyond the pavement structure, such as embankment and cut slopes, are relative to horizontal.
5. When median slopes intersect, see project plans for controls.
6. These slopes are intended to be used with new or reconstructed roadways.

■ The 2.8 m min is required when guard rail is utilized on the project. Treatment shall be uniform throughout the project length. The 2.8 m requirement may be waived under special conditions where guard rail is not utilized. The 2.8 m min shall not be waived when the thickness of structure section has not been finalized.

All dimensions are in meters.

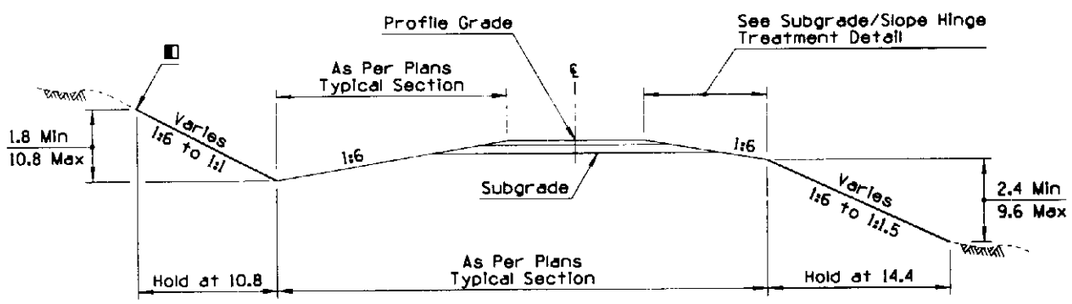

INTERMEDIATE SLOPES

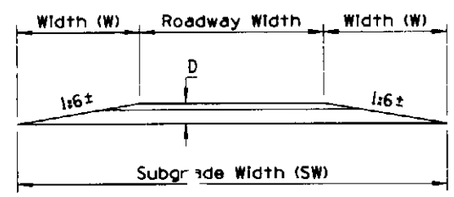

W = D x Slope (1:6)
D = Str Sec Depth (m) excluding ACFC
SW = 2 x W + Roadway Width

SHOULDER WEDGE DETAIL

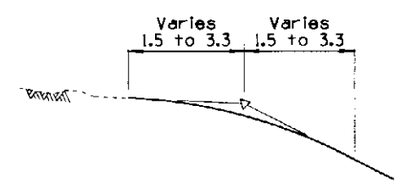

■ SLOPE ROUNDING DETAIL

Except in solid rock, or as directed by the Engineer, the intersection of roadway cut slopes with the ground surfaces shall be rounded. For cuts up to 1.8 m, use 1.5 m semi-tangents for slope rounding. For each additional 0.3 m of cut add 0.3 m to semi-tangent to 3.3 m maximum.

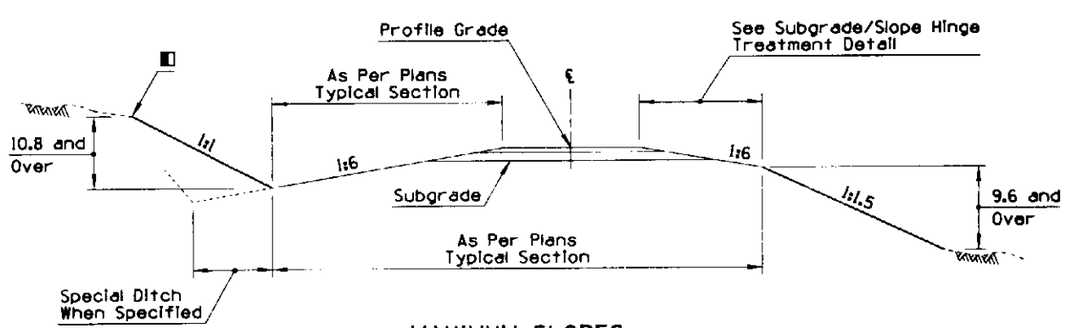

MAXIMUM SLOPES

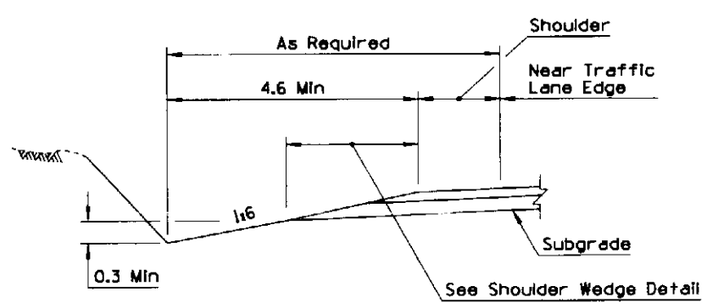

MINIMUM DITCH CONDITIONS DETAIL

DESIGN APPROVED	STATE OF ARIZONA DEPARTMENT OF TRANSPORTATION DIVISION OF HIGHWAYS STANDARD DRAWINGS	ISSUE 6/95
APPROVED FOR DISTRIBUTION	SLOPES PRIMARY ROADWAYS	DRAWING NO. C-02.20

Metric

No.	DESCRIPTION OF REVISIONS	MADE BY	DATE
1			
2			
3			
4			

Metric

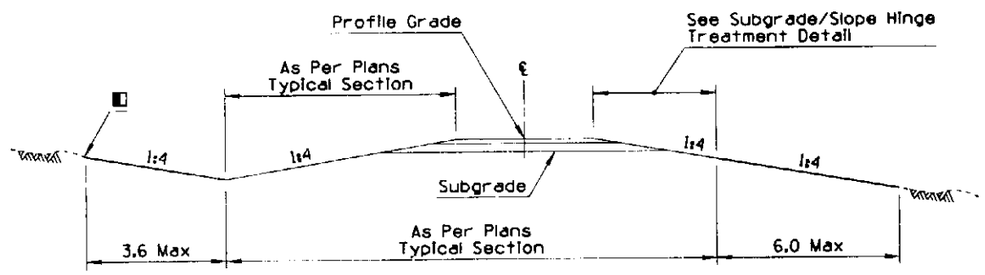

MINIMUM SLOPES

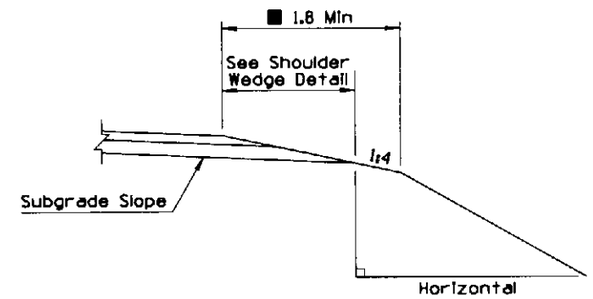

SUBGRADE/SLOPE HINGE TREATMENT DETAIL

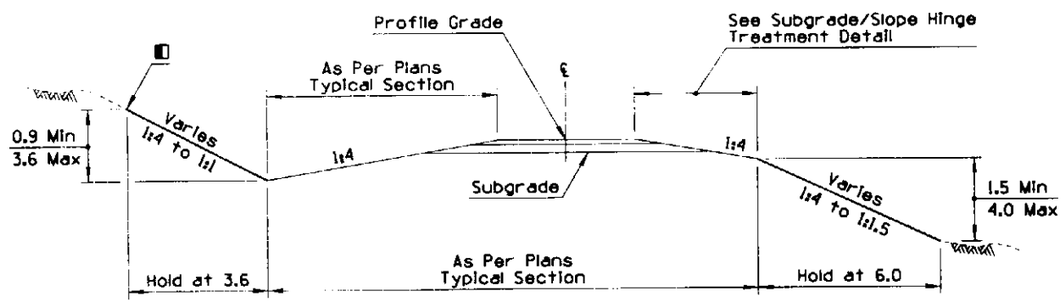

INTERMEDIATE SLOPES

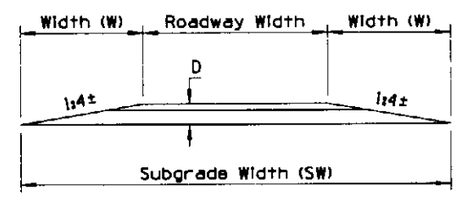

W = D x Slope (1:4)
D = Str Sec Depth (m) excluding ACFC
SW = 2 x W + Roadway Width

SHOULDER WEDGE DETAIL

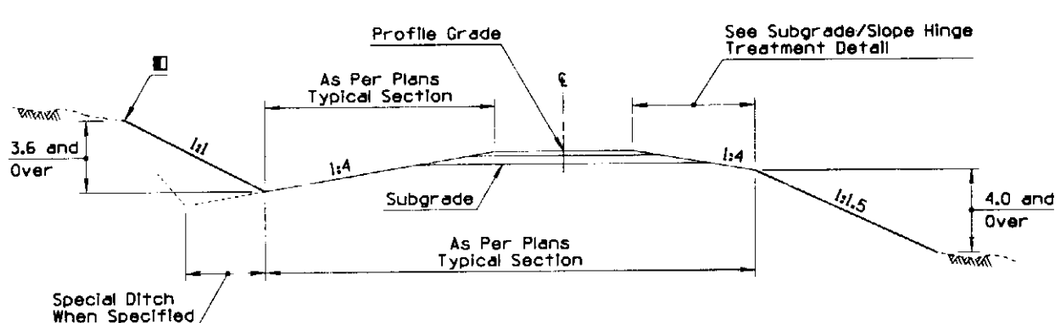

MAXIMUM SLOPES

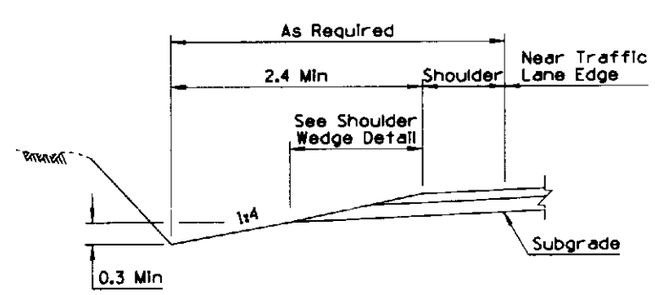

MINIMUM DITCH CONDITIONS DETAIL

GENERAL NOTES

1. Roadway width, cut ditch width, cross slope, and pavement structure section will be shown on project plans.
2. Design highwater should not be located above the subgrade in unpaved ditch.
3. Pavement structure slope is nominal. Actual slope is controlled by (D). See Shoulder Wedge Detail.
4. Slopes beyond the pavement structure, such as embankment and cut slopes, are relative to horizontal.
5. These slopes are intended to be used with new or reconstructed roadways.

■ The 1.8 m min is required when guard rail is utilized on the project. Treatment shall be uniform throughout the project length. The 1.8 m requirement may be waived under special conditions where guard rail is not utilized. The 1.8 m min shall not be waived when the thickness of structure section has not been finalized.

All dimensions are in meters.

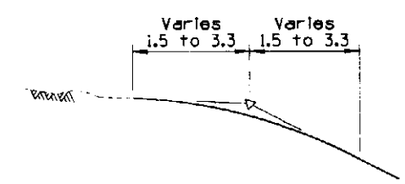

◧ SLOPE ROUNDING DETAIL

Except in solid rock, or as directed by the Engineer, the intersection of roadway cut slopes with the ground surfaces shall be rounded. For cuts up to 1.8 m, use 1.5 m semi-tangents for slope rounding. For each additional 0.3 m of cut add 0.3 m to semi-tangent to 3.3 m maximum.

DESIGN APPROVED	STATE OF ARIZONA DEPARTMENT OF TRANSPORTATION DIVISION OF HIGHWAYS STANDARD DRAWINGS	ISSUE 6/95
APPROVED FOR DISTRIBUTION	SLOPES SECONDARY/MISC. ROADWAYS	DRAWING NO. C-02.30

Metric

NO	DESCRIPTION OF REVISIONS	MADE BY	DATE
1			
2			
3			
4			

Metric

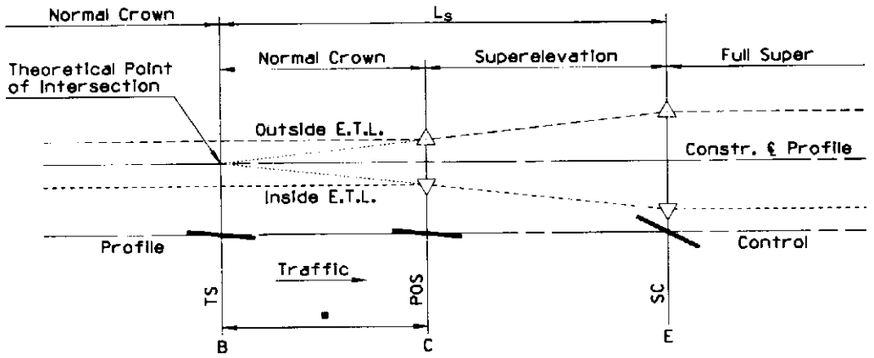

SPIRAL CURVE TRANSITION

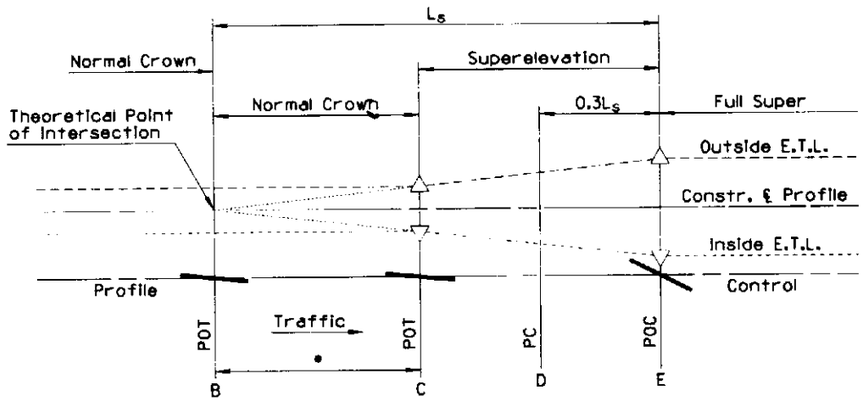

CIRCULAR CURVE TRANSITION

1-WAY ROADWAY-AXIS OF ROTATION AT CONSTR. ℄ HIGH POINT OF NORMAL CROWN ON OUTSIDE OF CURVE RIGHT TURNING ROADWAY

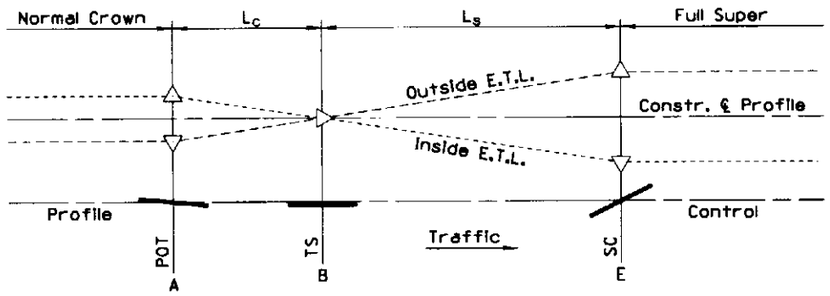

SPIRAL CURVE TRANSITION

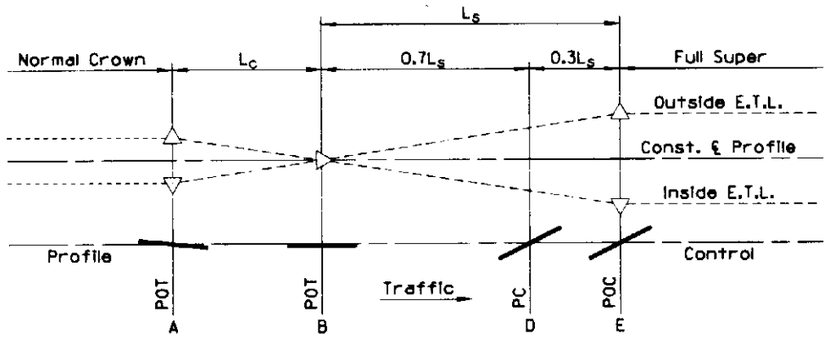

CIRCULAR CURVE TRANSITION

1-WAY ROADWAY-AXIS OF ROTATION AT CONSTR. ℄ HIGH POINT OF NORMAL CROWN ON INSIDE OF CURVE LEFT TURNING ROADWAY

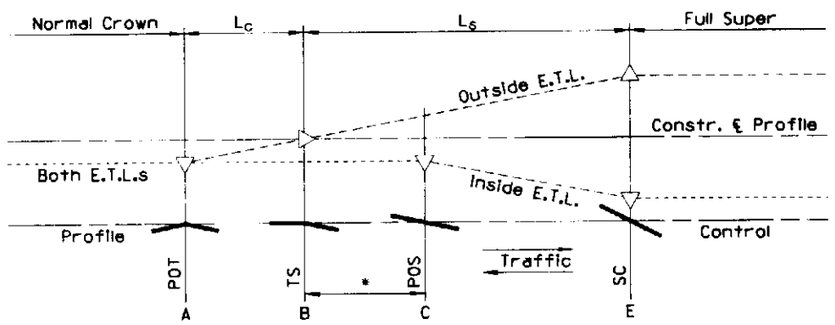

SPIRAL CURVE TRANSITION

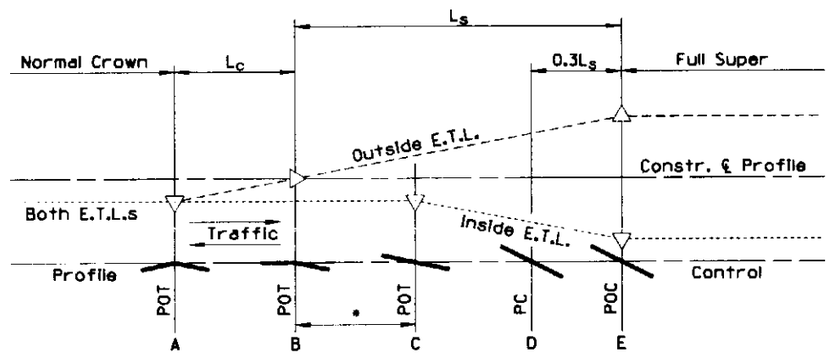

CIRCULAR CURVE TRANSITION

2-WAY ROADWAY-AXIS OF ROTATION AT ℄ (FOR OPPOSITE DEFLECTING CURVE, E.T.L. PROFILES ARE REVERSED)

GENERAL NOTES

1. Round edge profile intersections with vertical curves having an approximate length in meters equal to 20% of design speed in km/h.
2. For main roadway curves without spirals, L_s is the same as for spiraled curves but with 0.7 L_s on tangent and $0.3L_s$ on curve.
3. Shoulders transition with the adjacent travel lane when their normal cross slopes are the same.
4. If shoulders have a normal cross slope steeper than the adjacent lane, the shoulder transition will begin at a different point than that of the adjacent lane. See shoulder transition detail.

LEGEND

A - Point at which adverse crown removal begins.

B - Point at which superelevation transition begins.

C - Point of equity between superelevation and normal crown

D - P.C. location for circular curve transition.

E - Point at which full superelevation is reached.

L_c - Length of Normal Crown Removal

L_s - Length of Superelevation Runoff

E.T.L. - Edge of traveled lane

* - Distance BC = (NC) $(L_s)/e$

◒ - Length of Shoulder Transition = (NC) (L_s)/(NC of shoulder)

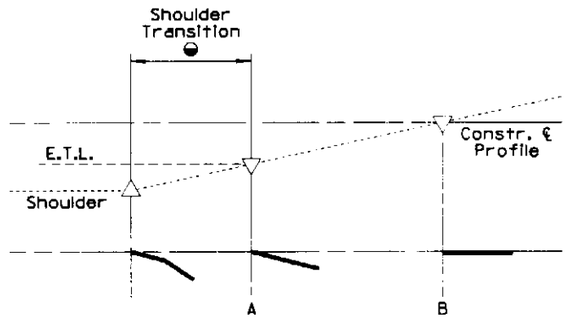

SHOULDER TRANSITION DETAIL

DESIGN APPROVED	STATE OF ARIZONA DEPARTMENT OF TRANSPORTATION DIVISION OF HIGHWAYS STANDARD DRAWINGS	ISSUE 6/95
APPROVED FOR DISTRIBUTION	SUPERELEVATION DISTRIBUTION	DRAWING NO. C-02.50

Metric

NO	DESCRIPTION OF REVISIONS	MADE BY	DATE
1			
2			
3			
4			

Metric

GENERAL NOTES

1. Dimensions of ditches shall be shown on the plans, as bottom width, depth and length.
2. Ditches shall be constructed with a minimum grade to prevent erosion. Ditch outlet treatment shall be as provided on plans.

All dimensions are in meters.

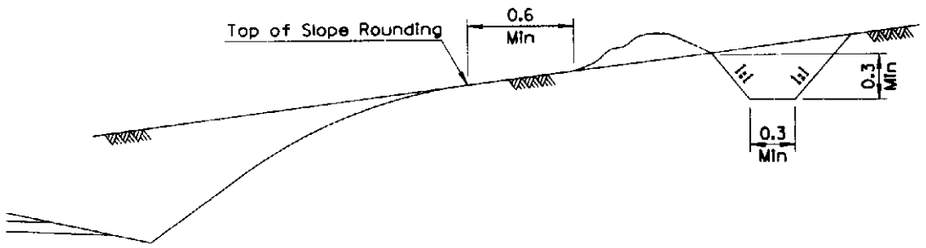

CROWN DITCH

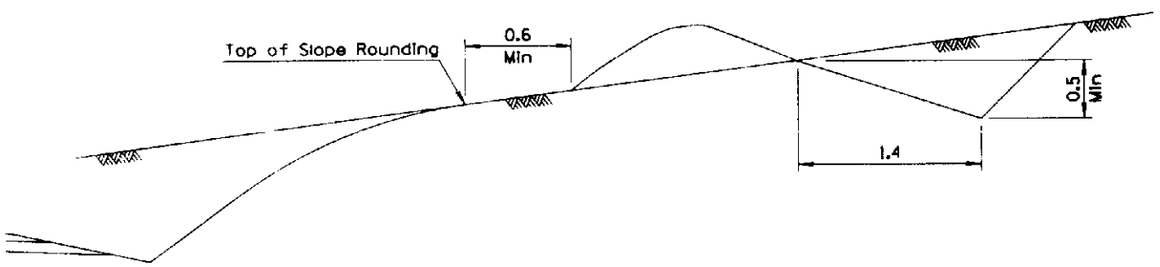

GRADER DITCH

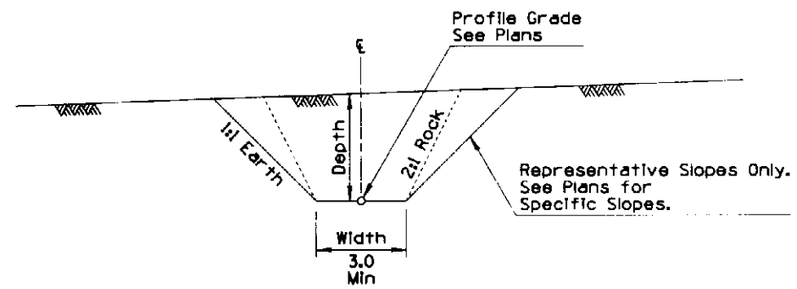

CHANNEL

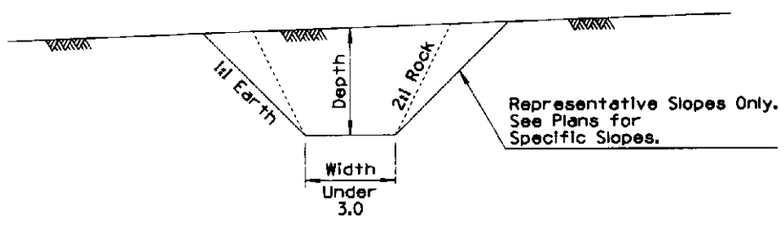

DITCH

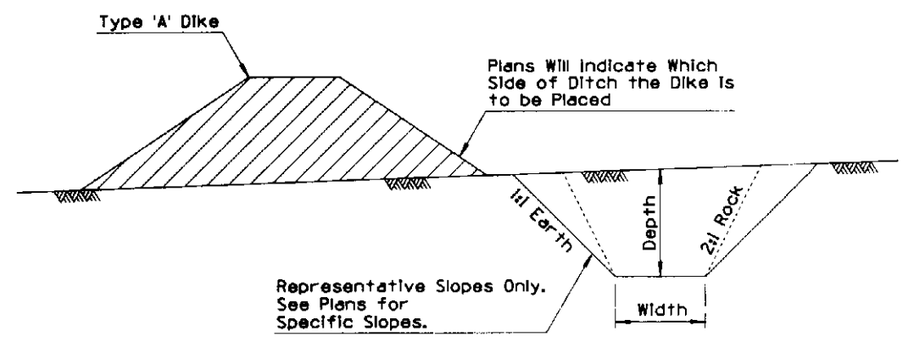

DITCH AND DIKE

DESIGN APPROVED	STATE OF ARIZONA DEPARTMENT OF TRANSPORTATION DIVISION OF HIGHWAYS STANDARD DRAWINGS	ISSUE 6/95
APPROVED FOR DISTRIBUTION	DITCHES, CHANNELS, DIKES AND BERMS DITCHES AND CHANNELS	DRAWING NO. C-03.10 Sheet 1 of 5

Metric

NO	DESCRIPTION OF REVISIONS	MADE BY	DATE
1			
2			
3			
4			

Metric

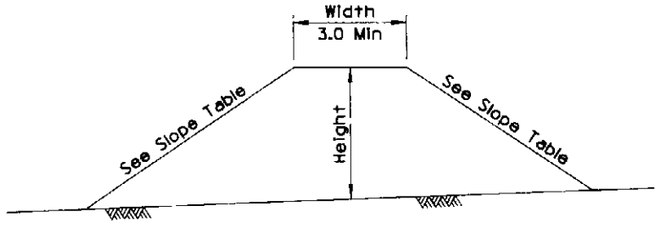

TYPE A DIKE

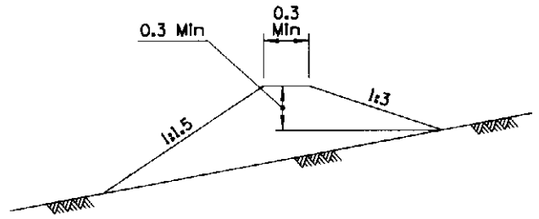

CROWN DIKE

GENERAL NOTES

1. Dimensions of dikes shall be shown on the plans as top width, height, length and top of dike elevation.
2. Dike side slopes outside the recovery area shall be shown on the plans.

All dimensions are in meters.

SLOPE TABLE		
Inside Recovery Area	Outside Recovery Area	
	Desirable	Maximum
1:10	1:4	1:1.5

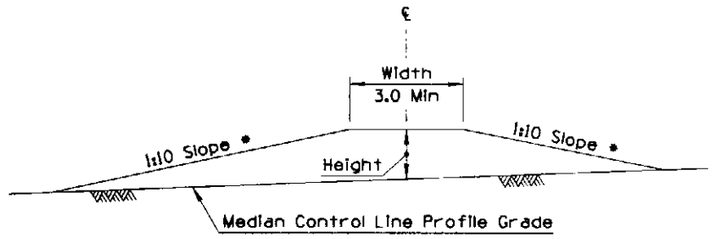

TYPE B TRANSVERSE MEDIAN DIKE

* Slope relative to grade of median at intersection with toe

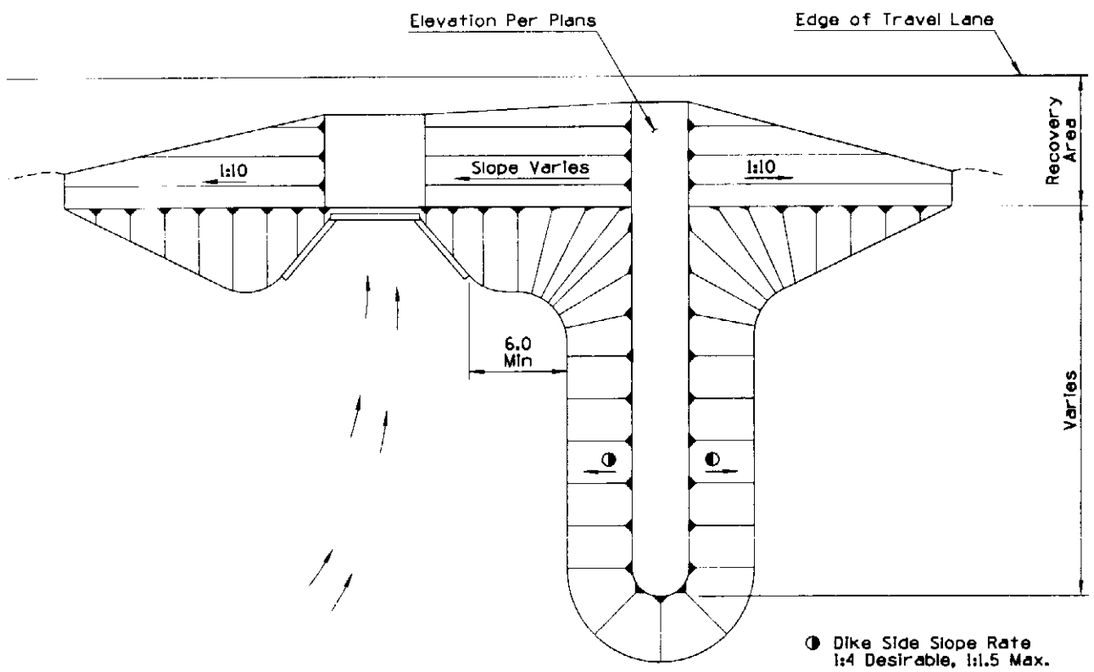

TYPICAL DIKE INSTALLATION AT STRUCTURE

Place dikes at structures to create water cushion.

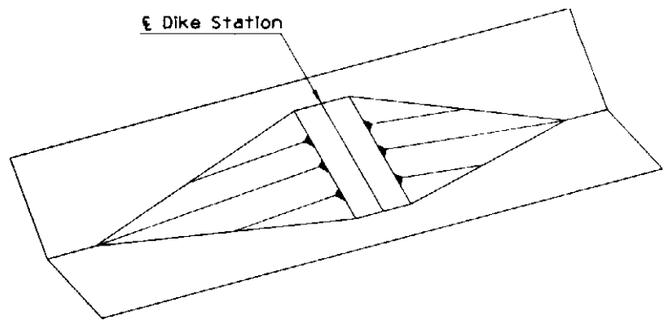

TYPICAL TRANSVERSE MEDIAN DIKE INSTALLATION

DESIGN APPROVED	STATE OF ARIZONA DEPARTMENT OF TRANSPORTATION DIVISION OF HIGHWAYS STANDARD DRAWINGS	ISSUE 6/95
APPROVED FOR DISTRIBUTION	DITCHES, CHANNELS, DIKES AND BERMS DIKES	DRAWING NO. C-03.10 Sheet 2 of 5

Metric

NO.	DESCRIPTION OF REVISIONS	MADE BY	DATE

Metric

GENERAL NOTES

1. Dimensions for ditch dikes shall be shown on the plans as dike stationing, height, length, dike back slope and top of dike elevation.
2. Dimensions for cut ditch widening shall be shown on the plans as beginning and ending stations.

All dimensions are in meters.

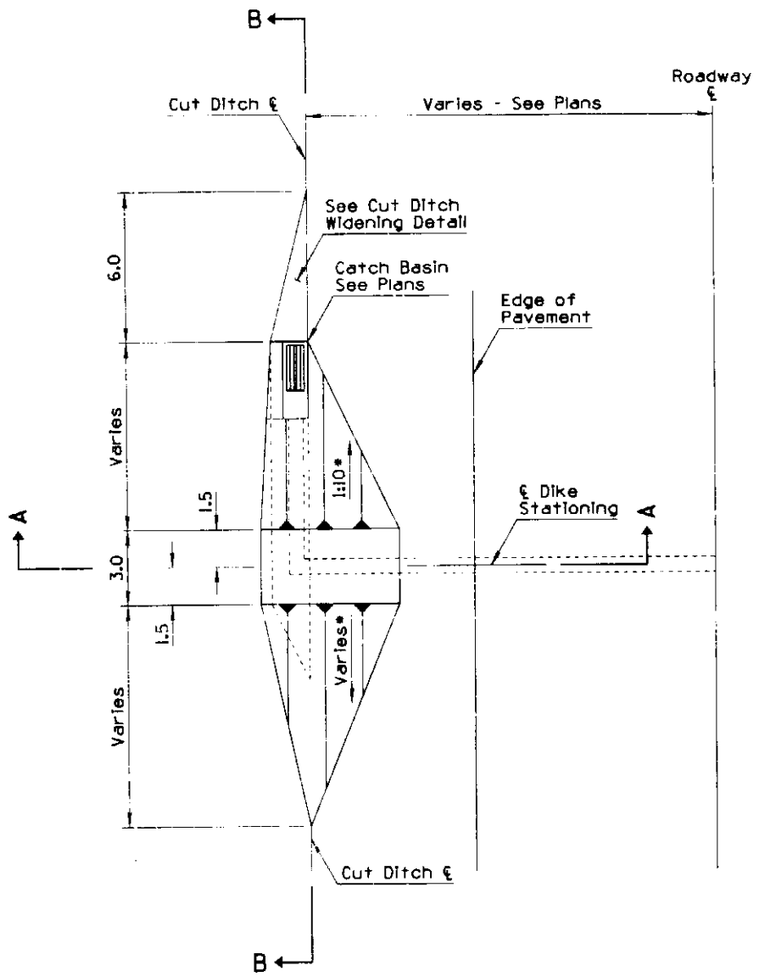

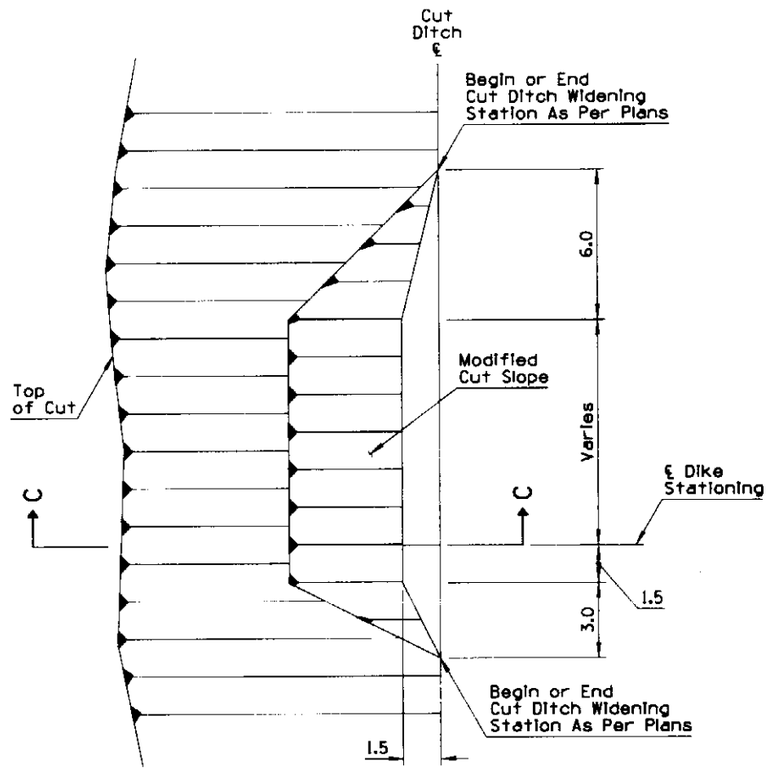

CUT DITCH WIDENING DETAIL

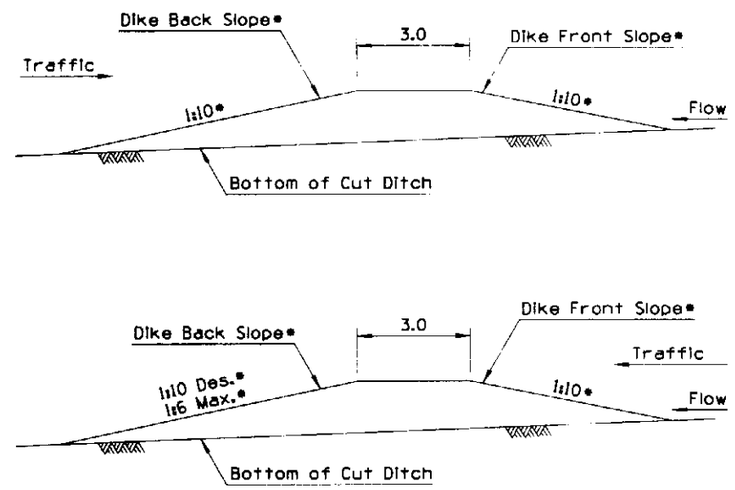

SECTION B-B

* Slope relative to grade of cut ditch at intersection with toe

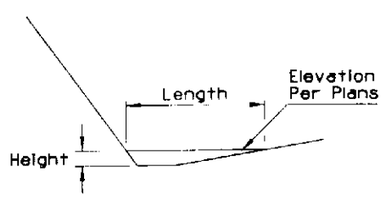

SECTION A-A

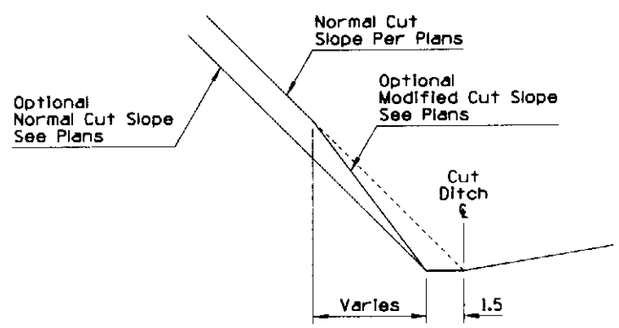

SECTION C-C

DESIGN APPROVED	STATE OF ARIZONA DEPARTMENT OF TRANSPORTATION DIVISION OF HIGHWAYS STANDARD DRAWINGS	ISSUE 6/95
APPROVED FOR DISTRIBUTION	DITCHES, CHANNELS, DIKES AND BERMS DITCH DIKE	DRAWING NO. C-03.10 Sheet 3 of 5

Metric

NO	DESCRIPTION OF REVISIONS	MADE BY	DATE
1			
2			
3			
4			

Metric

GENERAL NOTES

1. Pipe berms are required when pipe projection is not protected by guard rail.
2. Berm construction similar for multiple pipe installation and for pipes without end sections.
3. Berm construction shown is for pipe extensions. Berm construction similar for new pipe installation. See Pipe Berm Requirement Detail. If Point A is within the recovery area, then a pipe berm is required and Point B is set at the edge of the recovery area.

All dimensions are in meters.

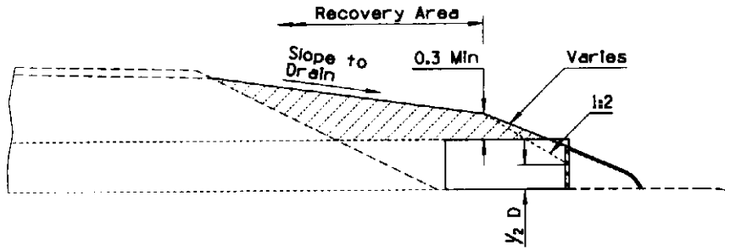

SECTION A-A (WITH END SECTION)

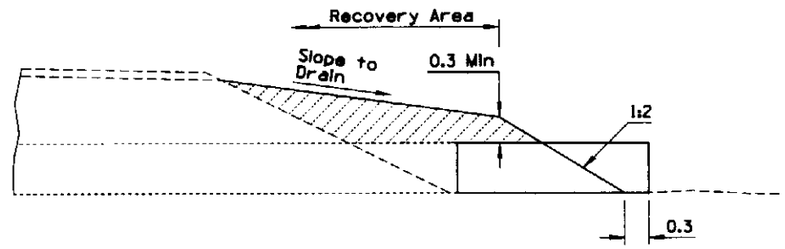

SECTION A-A (WITHOUT END SECTION)

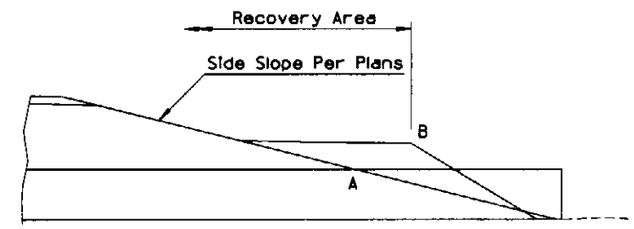

PIPE BERM REQUIREMENT DETAIL

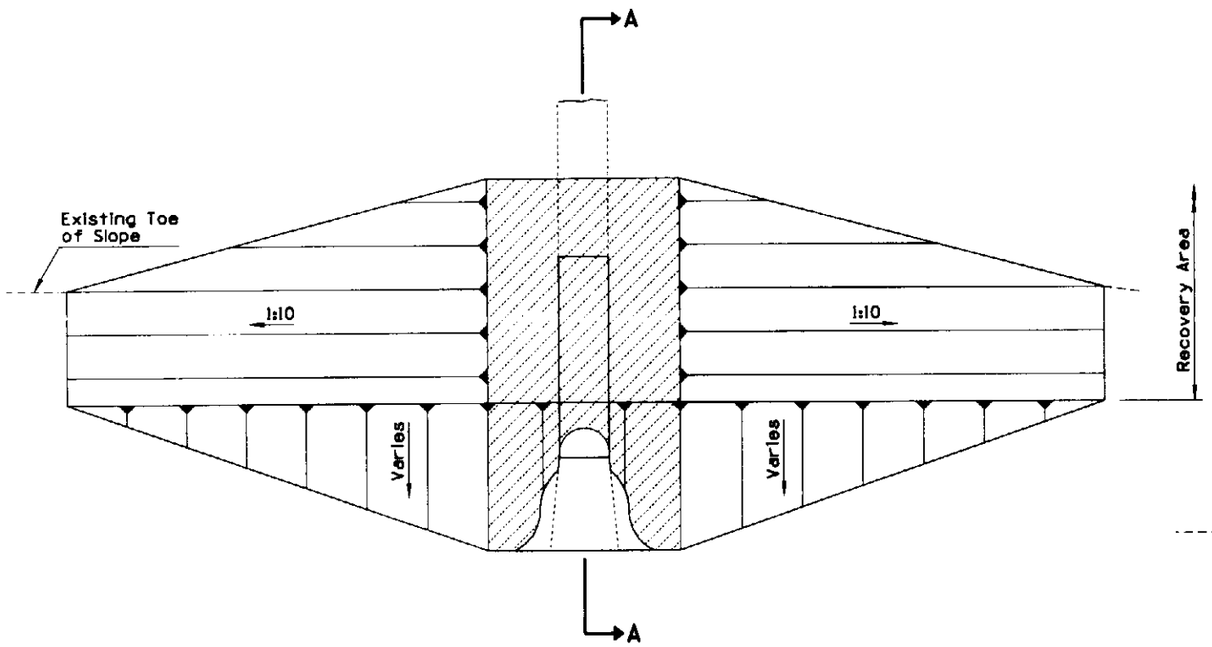

STRAIGHT PIPE PLAN

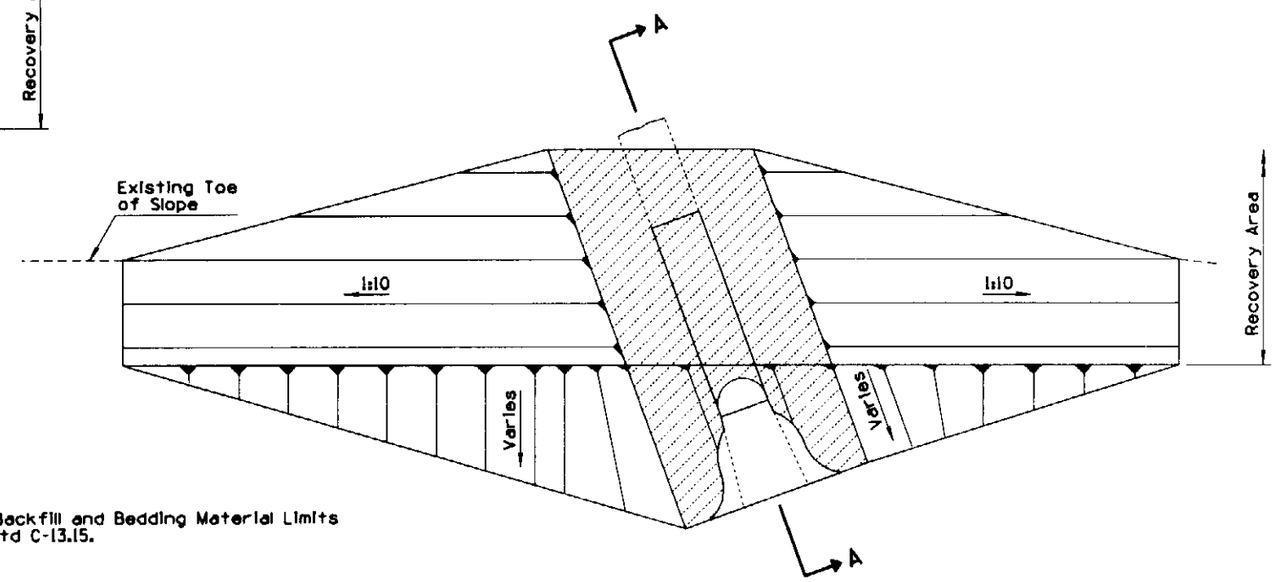

SKEWED PIPE PLAN

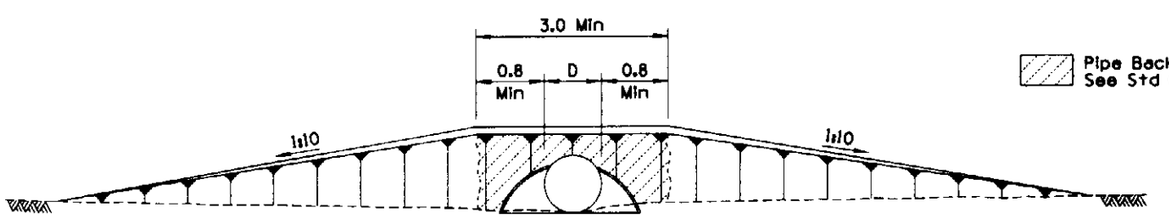

ELEVATION

Pipe Backfill and Bedding Material Limits See Std C-13.15.

NOTE:
Single Pipe installation: D = Outside Diameter of Pipe
Multiple Pipe installation: D = Outside Edge to Outside Edge of Pipes

DESIGN APPROVED	STATE OF ARIZONA DEPARTMENT OF TRANSPORTATION DIVISION OF HIGHWAYS STANDARD DRAWINGS	ISSUE 6/95
APPROVED FOR DISTRIBUTION	DITCHES, CHANNELS, DIKES AND BERMS PIPE BERMS	DRAWING NO. C-03.10 Sheet 4 of 5

Metric

NO	DESCRIPTION OF REVISIONS	MADE BY	DATE
1			
2			
3			
4			

Metric

GENERAL NOTES

1. Berm construction similar for box culvert and pipe with headwall.
2. Berm construction shown is for extension of existing facilities. Berm construction similar for new facilities.

All dimensions are in meters.

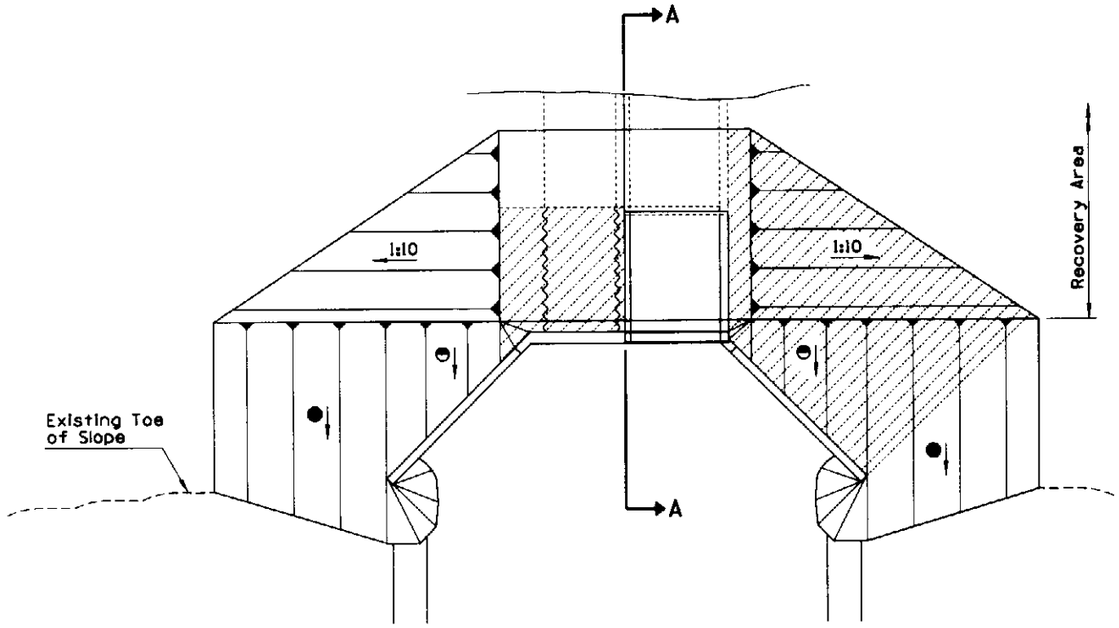

STRAIGHT HEADWALL PLAN

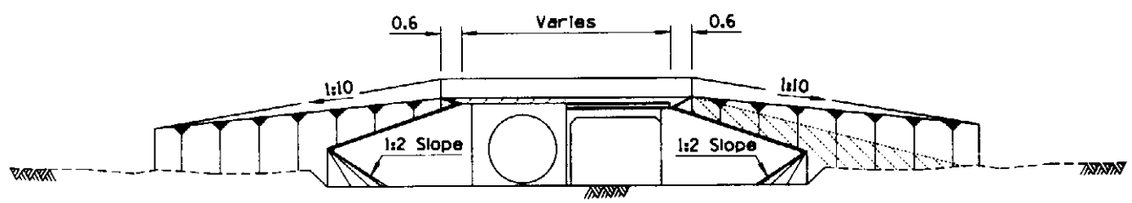

ELEVATION

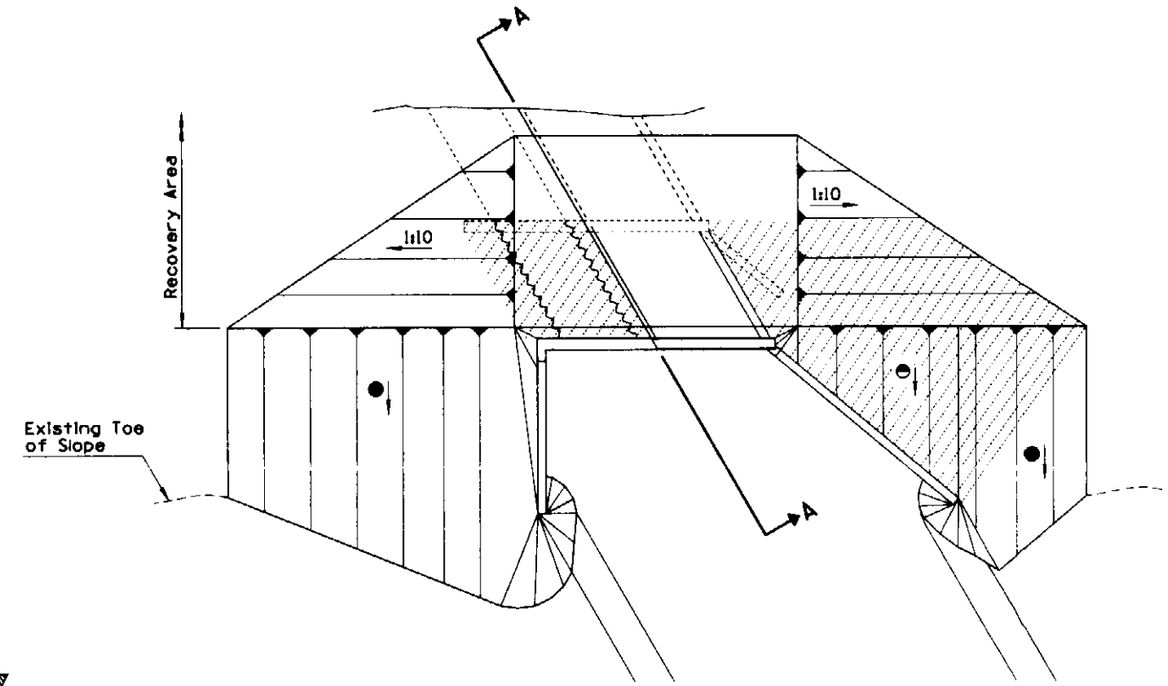

SKEWED HEADWALL PLAN

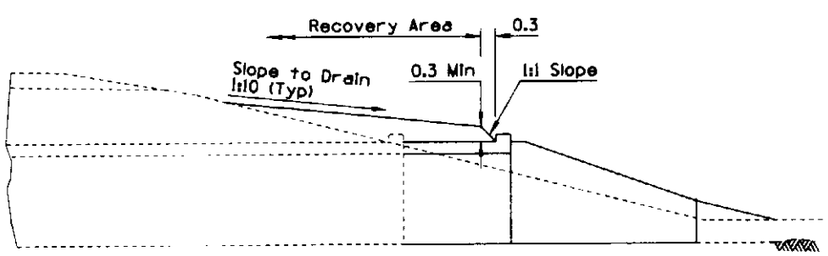

SECTION A-A (FOR CBC)

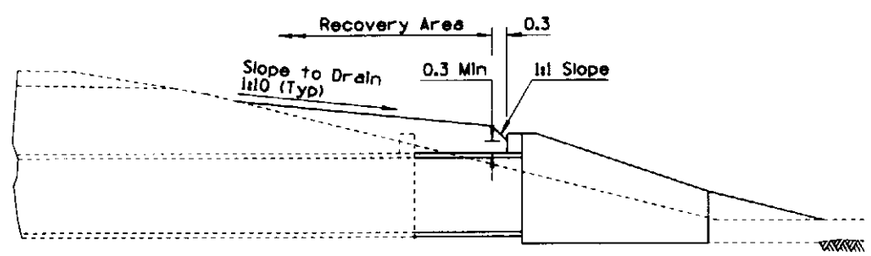

SECTION A-A (FOR PIPE WITH HEADWALL)

◑ Vary slope. Slope shall match to top of wing wall.

● Slope shall match wing wall design slope (1:2, 1:4, or 1:6).

▨ Structure Backfill Limits See Std B-19.50

DESIGN APPROVED	STATE OF ARIZONA DEPARTMENT OF TRANSPORTATION DIVISION OF HIGHWAYS STANDARD DRAWINGS	ISSUE 6/95
APPROVED FOR DISTRIBUTION	DITCHES, CHANNELS, DIKES AND BERMS HEADWALL BERMS	DRAWING NO. C-03.10 Sheet 5 of 5

Metric

NO	DESCRIPTION OF REVISIONS	MADE BY	DATE
1			
2			
3			
4			

Metric

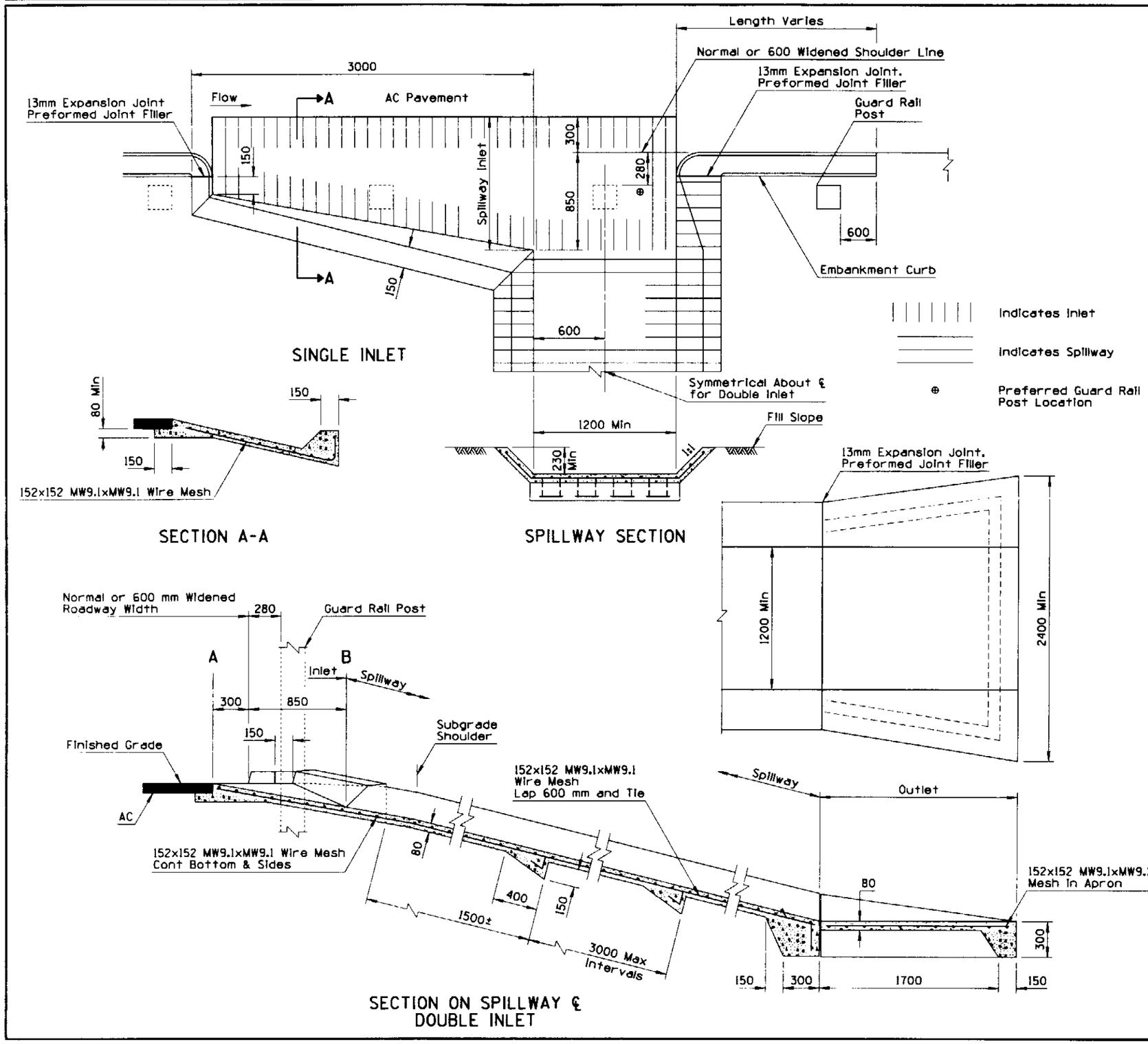

GENERAL NOTES

1. Concrete for the spillway inlet, spillway outlet shall be Class B.
2. Where rock is encountered, the outlet may be omitted.
3. When outlet is used, the wire mesh shall extend through the joint into the outlet in lieu of bending into the key.
4. Spillway invert slope shall be uniformly downward from A to B.

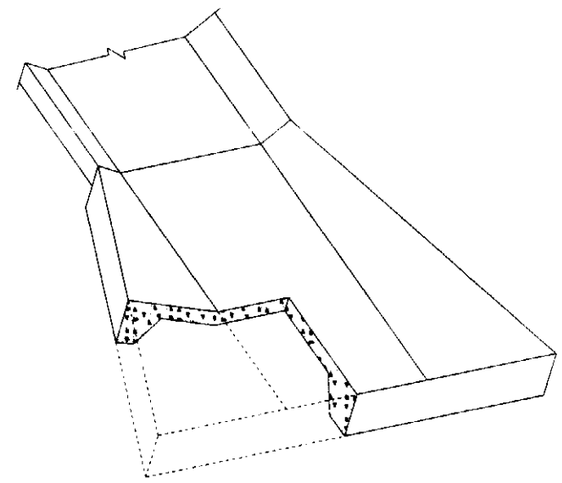

OUTLET DETAIL

DESIGN APPROVED	STATE OF ARIZONA DEPARTMENT OF TRANSPORTATION DIVISION OF HIGHWAYS STANDARD DRAWINGS	ISSUE 6/95
APPROVED FOR DISTRIBUTION	SPILLWAY, EMBANKMENT	DRAWING NO. C-04.10

Metric

NO	DESCRIPTION OF REVISIONS	MADE BY	DATE
1			
2			
3			
4			

Metric

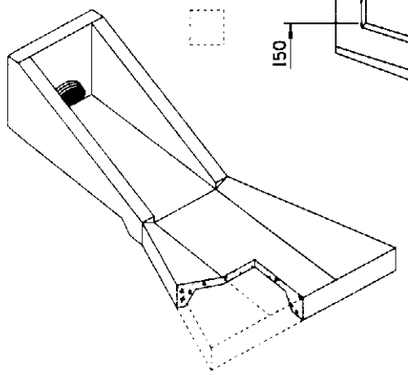

OUTLET DETAIL

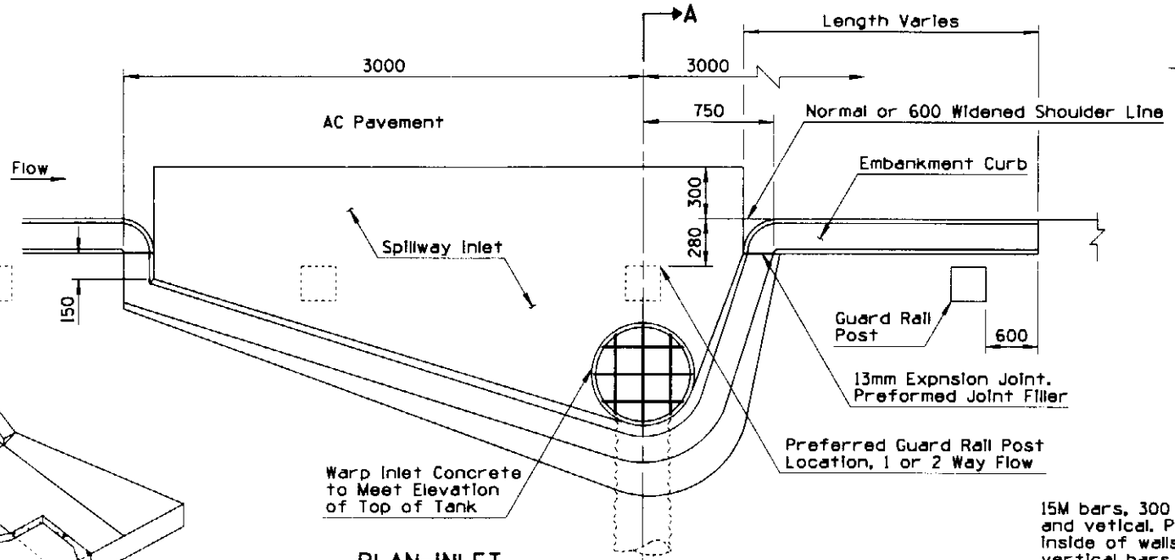

PLAN-INLET

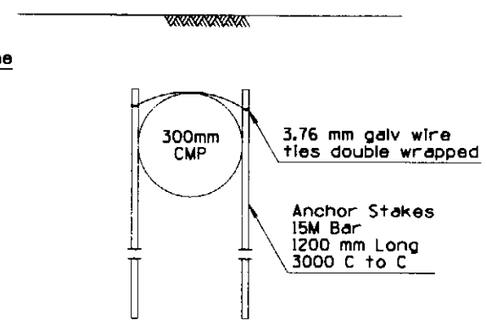

DETAIL ANCHOR

GENERAL NOTES

1. Round all exposed concrete corners.
2. Tank, stub, trash rack and angle supports shall be shop fabricated, welded and galvanized in accordance with AASHTO M 36M.
3. Stub shall be of annular corrugation. Downdrain piping beyond stub may be either annular or helical corrugation.
4. Permissable couplings shall be mechanical, heat-shrinkable polyolatin sheet; one piece lap type neoprene sheet or slip seam; all min 300 mm width and min 1.32 mm thick.
5. Inlet invert slope shall be uniformly downward from one foot inside of embankment curb base.
6. Inlet and outlet concrete shall be Class B. Embankment curb concrete shall be in accordance with Standard Specifications.

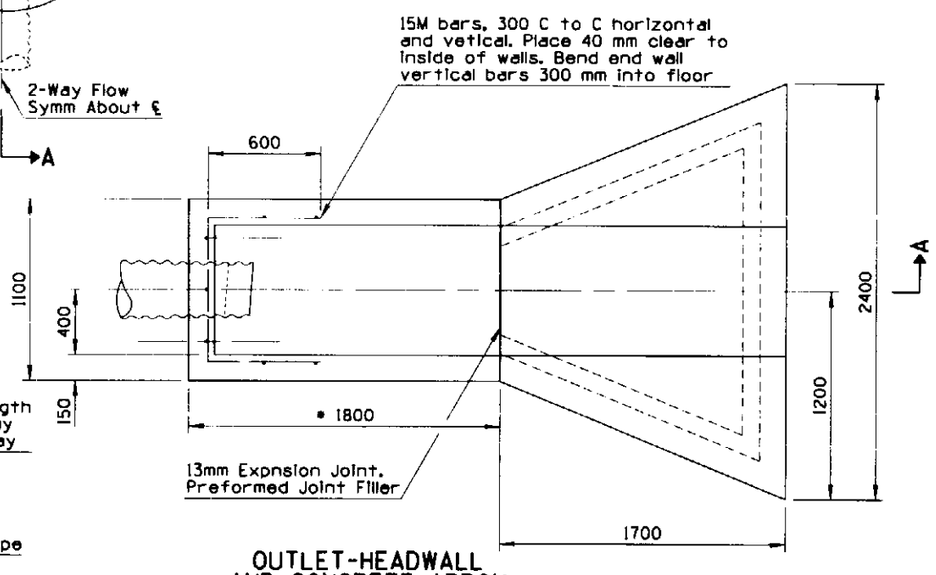

OUTLET-HEADWALL AND CONCRETE APRON

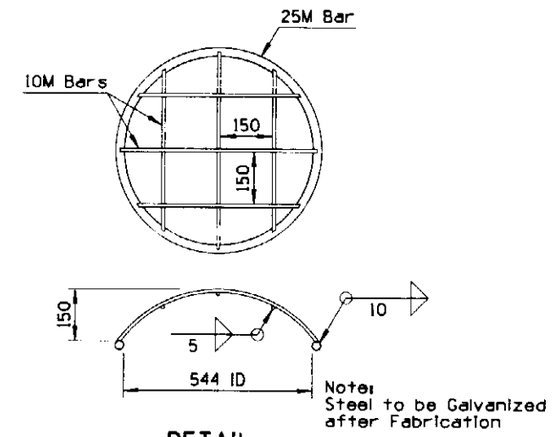

DETAIL TRASH RACK

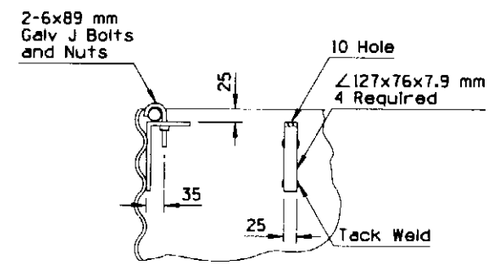

DETAIL ANGLE SUPPORTS FOR TRASH RACK

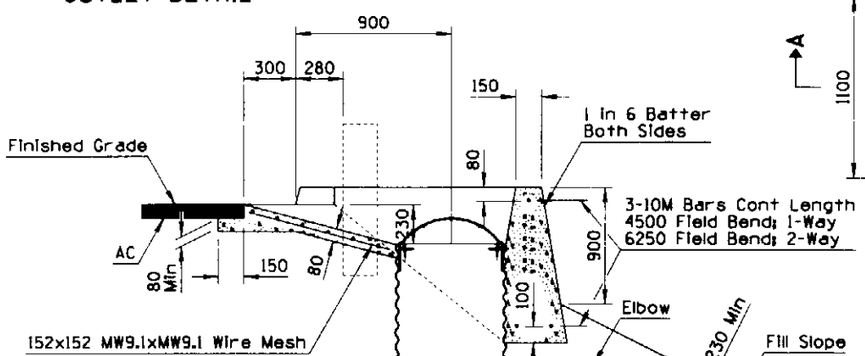

SECTION A-A

● Varies with subgrade slope and pavement structure thickness

* Varies with fill slope and pipe cover

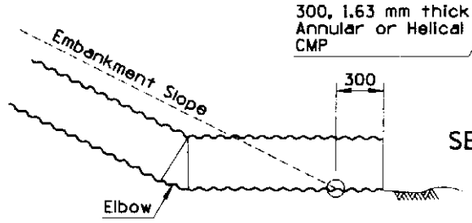

CMP OUTLET ON ROCK

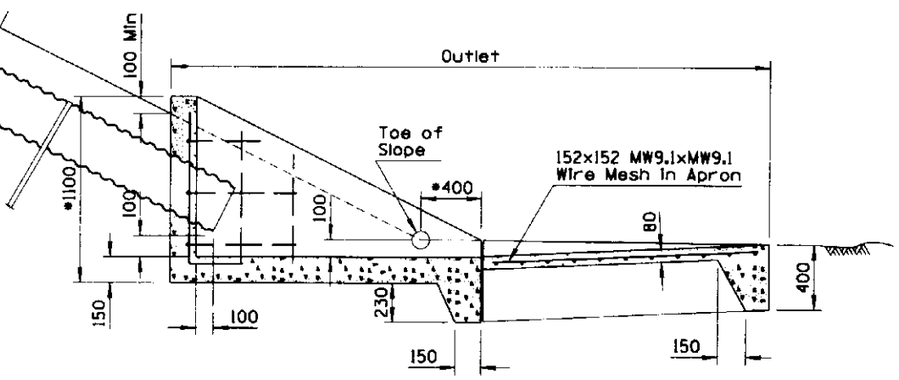

DESIGN APPROVED	STATE OF ARIZONA DEPARTMENT OF TRANSPORTATION DIVISION OF HIGHWAYS STANDARD DRAWINGS	ISSUE 6/95
APPROVED FOR DISTRIBUTION	DOWNDRAIN, EMBANKMENT	DRAWING NO. C-04.20

Metric

NO	DESCRIPTION OF REVISIONS	MADE BY	DATE
1			
2			
3			
4			

Metric

LENGTH OF SPILLWAY (m)

Thickness ◑ (mm)	Embankment Height (m)																
	1.5	2.0	2.5	3.0	3.5	4.0	4.5	5.0	5.5	6.0	6.5	7.0	7.5	8.0	8.5	9.0	9.6
300-475	10	13	15	16	16	16	16	17	17	17	17	17	18	18	18	19	19
480-490	10	13	15	16	16	16	16	17	17	17	17	18	18	18	18	19	19
495-510	10	13	15	16	16	16	17	17	17	17	17	18	18	18	18	19	19
515-525	10	13	16	16	16	16	17	17	17	17	18	18	18	18	19	19	19
530-540	10	13	16	16	16	17	17	17	17	17	18	18	18	18	19	19	19
545-560	10	13	16	16	16	17	17	17	17	18	18	18	18	18	19	19	19
565-575	10	13	16	16	16	17	17	17	17	18	18	18	18	19	19	19	19
580-590	10	14	16	16	17	17	17	17	17	18	18	18	18	19	19	19	20
595-605	11	14	16	16	17	17	17	17	18	18	18	18	19	19	19	19	20
610-625	11	14	16	17	17	17	17	17	18	18	18	18	19	19	19	19	20
630-640	11	14	16	17	17	17	17	18	18	18	18	18	19	19	19	20	20
645-655	11	14	16	17	17	17	17	18	18	18	18	19	19	19	19	20	20
660-675	11	14	16	17	17	17	18	18	18	18	18	19	19	19	19	20	20
680-690	11	14	17	17	17	17	18	18	18	18	19	19	19	19	20	20	20
695-705	11	14	17	17	17	18	18	18	18	18	19	19	19	19	20	20	20
710-720	11	14	17	17	17	18	18	18	18	19	19	19	19	19	20	20	20
725-740	11	14	17	17	17	18	18	18	18	19	19	19	19	20	20	20	20
745-755	11	15	17	17	18	18	18	18	18	19	19	19	19	20	20	20	21
760-770	12	15	17	17	18	18	18	18	19	19	19	19	20	20	20	20	21
775-790	12	15	17	18	18	18	18	18	19	19	19	19	20	20	20	20	21
795-805	12	15	17	18	18	18	18	19	19	19	19	19	20	20	20	21	21
810-820	12	15	17	18	18	18	18	19	19	19	19	20	20	20	20	21	21
825-840	12	15	17	18	18	18	19	19	19	19	19	20	20	20	20	21	21
845-855	12	15	18	18	18	18	19	19	19	19	20	20	20	20	21	21	21
860-870	12	15	18	18	18	19	19	19	19	19	20	20	20	20	21	21	21
875-885	12	15	18	18	18	19	19	19	19	20	20	20	20	20	21	21	21
890-900	12	15	18	18	18	19	19	19	19	20	20	20	20	21	21	21	21

C-02.10 AND C-02.20 SLOPES

LENGTH OF SPILLWAY (m)

Thickness ◑ (mm)	Embankment Height (m)					
	1.5	2.0	2.5	3.0	3.5	4.0
300-465	6	7	7	7	7	8
470-490	6	7	7	7	8	8
495-515	6	7	7	7	8	8
520-535	7	7	7	7	8	8
540-560	7	7	7	8	8	8
565-585	7	7	7	8	8	8
590-610	7	7	8	8	8	8
615-635	7	7	8	8	8	8
640-660	7	7	8	8	8	9
665-680	7	8	8	8	8	9
685-705	7	8	8	8	8	9
710-730	7	8	8	8	9	9
735-755	7	8	8	8	9	9
760-780	8	8	8	8	9	9
785-805	8	8	8	9	9	9
810-830	8	8	8	9	9	9
835-855	8	8	9	9	9	9
860-875	8	8	9	9	9	9
880-900	8	8	9	9	9	10

C-02.30 SLOPES

GENERAL NOTES

1. For C-02.10 slopes with embankment height over 7.2 m, use length for 7.2 m embankment height from table + 2.24 (emb. height-7.2 m).
2. For C-02.20 slopes with embankment height over 9.6 m, use length for 9.6 m embankment height from table + 1.8 (emb. height-9.6 m).
3. For C-02.30 slopes with embankment height over 4.0 m, use length for 4.0 m embankment height from table + 1.8 (emb. height-4.0 m)
4. For spillway details, see Std C-04.10.

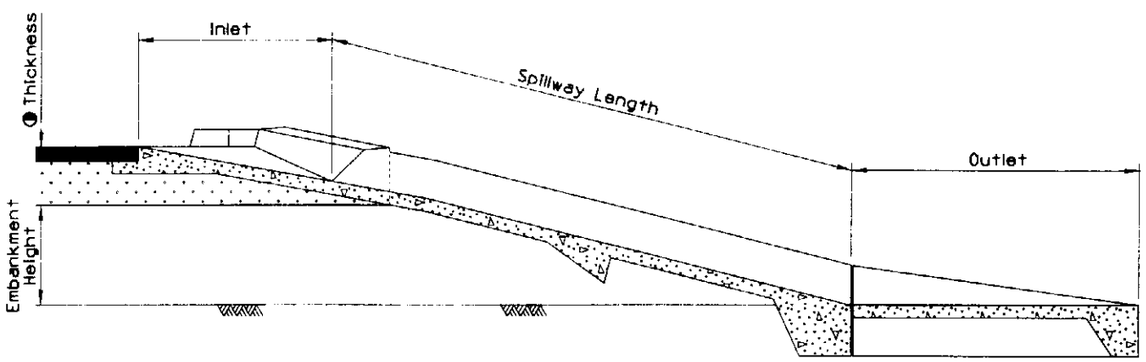

DESIGN APPROVED	STATE OF ARIZONA DEPARTMENT OF TRANSPORTATION DIVISION OF HIGHWAYS STANDARD DRAWINGS	ISSUE 6/95
APPROVED FOR DISTRIBUTION	SPILLWAY LENGTH TABLE	DRAWING NO. C-04.30

Metric

NO.	DESCRIPTION OF REVISIONS	MADE BY	DATE
1			
2			
3			
4			

Metric

LENGTH OF DOWNDRAIN (m)

Thickness ◑ (mm)	Embankment Height (m)																
	1.5	2	2.5	3	3.5	4	4.5	5	5.5	6	6.5	7	7.5	8	8.5	9	9.6
300-350	6	9	12	13	13	14	14	15	15	15	15	16	16	16	17	17	17
355-425	6	9	12	13	13	14	14	15	15	15	16	16	16	16	17	17	17
430-440	7	10	12	13	13	14	14	15	15	15	16	16	16	16	17	17	17
445-470	7	10	12	13	14	14	14	15	15	15	16	16	16	16	17	17	17
475-495	7	10	12	13	14	14	14	15	15	15	16	16	16	17	17	17	17
500-520	7	10	13	13	14	14	15	15	15	16	16	16	16	17	17	17	18
525-550	7	10	13	13	14	14	15	15	15	16	16	16	17	17	17	17	18
555-570	7	10	13	14	14	15	15	15	16	16	16	16	17	17	17	18	18
575-585	7	10	13	14	14	15	15	15	16	16	16	17	17	17	17	18	18
590-605	7	11	13	14	14	15	15	15	16	16	16	17	17	17	18	18	18
610-625	8	11	13	14	14	15	15	16	16	16	17	17	17	17	18	18	18
630-655	8	11	13	14	15	15	15	16	16	16	17	17	17	18	18	18	18
660-685	8	11	14	14	15	15	16	16	16	17	17	17	17	18	18	18	19
690-710	8	11	14	14	15	15	16	16	16	17	17	17	18	18	18	18	19
715-730	8	11	14	15	15	16	16	16	17	17	17	17	18	18	18	19	19
735-755	8	11	14	15	15	16	16	16	17	17	17	18	18	18	18	19	19
760-780	9	12	14	15	15	16	16	17	17	17	17	18	18	18	19	19	19
785-800	9	12	14	15	16	16	16	17	17	17	18	18	18	18	19	19	19
805-820	9	12	14	15	16	16	16	17	17	17	18	18	18	19	19	19	20
825-845	9	12	15	15	16	16	17	17	17	18	18	18	18	19	19	19	20
850-860	9	12	15	15	16	16	17	17	17	18	18	18	19	19	19	19	20
865-875	9	12	15	15	16	16	17	17	17	18	18	18	19	19	19	20	20
880-890	9	12	15	16	16	17	17	17	18	18	18	18	19	19	19	20	20
895-900	9	12	15	16	16	17	17	17	18	18	18	19	19	19	19	20	20

C-02.10 AND C-02.20 SLOPES

LENGTH OF DOWNDRAIN (m)

Thickness ◑ (mm)	Embankment Height (m)					
	1.5	2	2.5	3	3.5	4
300-500	4	5	5	6	6	6
505-525	4	5	5	6	6	7
530-580	4	5	6	6	6	7
585-650	5	5	6	6	7	7
655-665	5	6	6	6	7	7
670-725	5	6	6	7	7	7
730-765	5	6	6	7	7	8
770-810	5	6	7	7	7	8
815-825	5	6	7	7	8	8
830-890	6	6	7	7	8	8
895-900	6	7	7	7	8	8

C-02.30 SLOPES

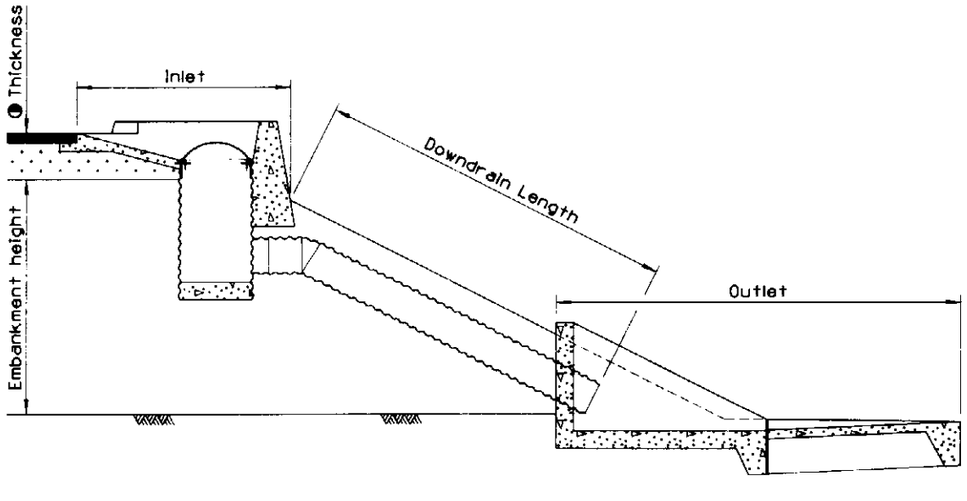

GENERAL NOTES

1. For C-02.10 slopes with embankment height over 7.2 m, use length for 7.2 m embankment height from table +2.24 (emb. height-7.2 m).
2. For C-02.20 slopes with embankment height over 9.6 m, use length for 9.6 m embankment height from table +1.8 (emb. height-9.6 m).
3. For C-02.30 slopes with embankment height over 4.0 m, use length for 4.0 m embankment height from table +1.8 (emb. height-4.0 m).
4. For downdrain details, see Std C-04.20.

DESIGN APPROVED	STATE OF ARIZONA DEPARTMENT OF TRANSPORTATION DIVISION OF HIGHWAYS STANDARD DRAWINGS	ISSUE 6/95
APPROVED FOR DISTRIBUTION	DOWNDRAIN LENGTH TABLE	DRAWING NO. C-04.40

Metric

NO.	DESCRIPTION OF REVISIONS	MADE BY	DATE
1			
2			
3			
4			

Metric

GENERAL NOTES

1. Stub shall have annular corrugation. Downdrain piping beyond stub may be either annular or helical.
2. Couplings shall be mechanical heat-shrinkable polyolefin sheet; one piece lap type neoprene sheet or slip seam; all 300 mm; min width and 1.32 mm min thickness.
3. Maximum Q Allowable = 0.23 m^3/s
   Minimum V Allowable = 0.3 m/s

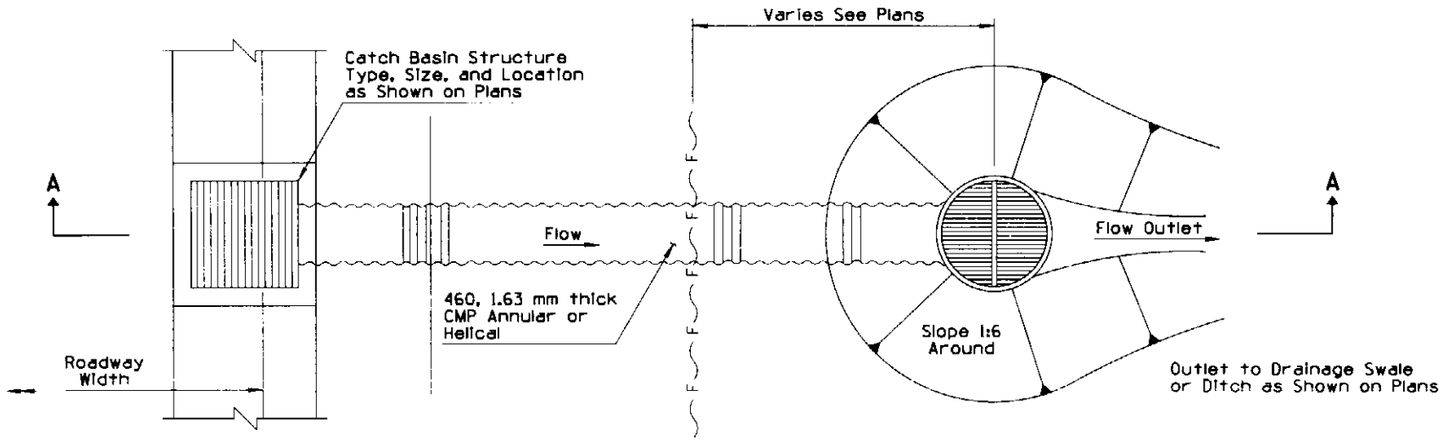

PLAN

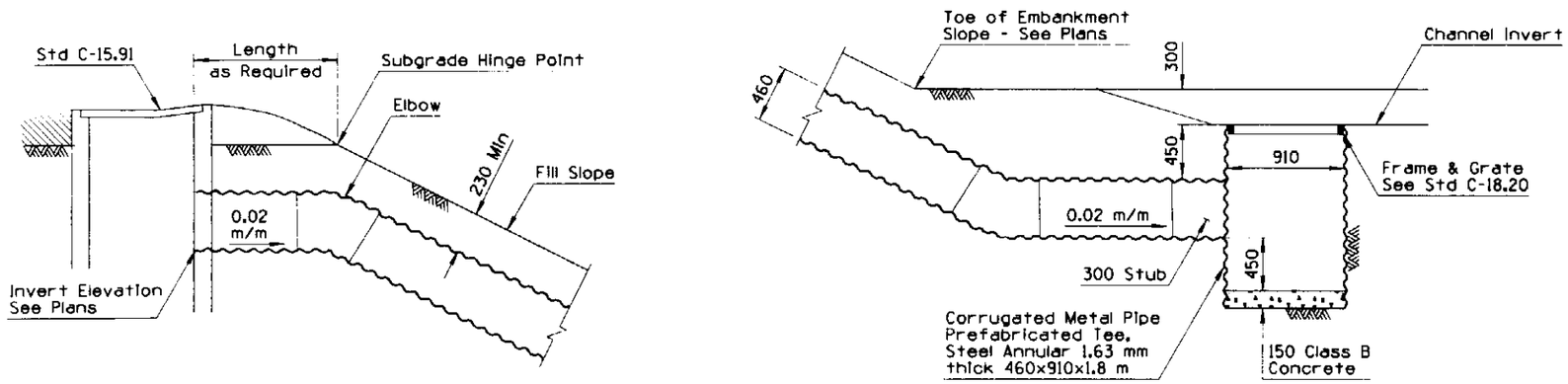

SECTION A-A

DESIGN APPROVED	STATE OF ARIZONA DEPARTMENT OF TRANSPORTATION DIVISION OF HIGHWAYS STANDARD DRAWINGS	ISSUE 6/95
APPROVED FOR DISTRIBUTION	DOWNDRAIN ENERGY DISSIPATOR	DRAWING NO. C-04.50

Metric

NO	DESCRIPTION OF REVISIONS	MADE BY	DATE
1			
2			
3			
4			

Metric

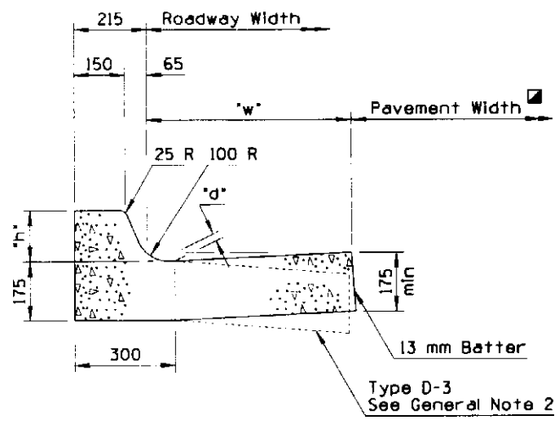

CURB AND GUTTER
TYPE D, D-1, D-2 & D-3

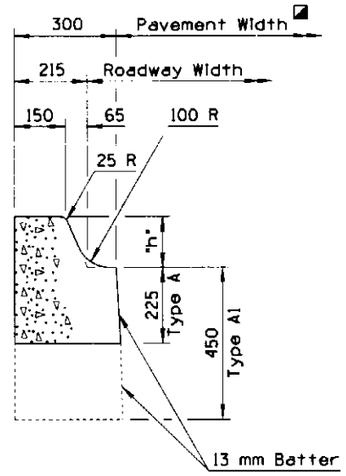

SINGLE CURB
TYPE A & A1

C & G TYPE	CURB HEIGHT "h"	GUTTER WIDTH "w"	GUTTER DEPRESSION "d"
D	◑	600	40
D-1	◑	750	45
D-2	◑	1350	45
D-3	◑	600	N/A

◪ See Plans

◑ See Plans (150 or 175 mm Typical)

GENERAL NOTES

SINGLE CURB AND CURB AND GUTTER

1. Single curb, and curb and gutter may be constructed by the use of forms or the concrete may be extruded.
2. When the pavement section slopes away from the gutter, the slope of the gutter shall match the pavement cross slope. Therefore, the gutter depression is not applicable.
3. Two inch deep contraction joints shall be placed in the curb and the gutter at locations which match the joints in adjacent portland cement concrete pavement and at approximate 4.5 m centers when adjacent to asphaltic concrete pavement. Joints shall be either hand tooled or sawed.
4. Expansion joints shall be located at tangent points in curb returns, at structures and at maximum 18 m intervals. The 13 mm joint filler shall extend the full depth at the concrete.
5. Concrete shall be finished with a steel trowel followed by brushing with a fine brush along the length of the curb and gutter.
6. All exposed edges and hand tooled joints shall be finished with a tool having a 6 mm radius unless a larger radius is indicated.

EMBANKMENT CURB

1. No additional finishing will be required after extrusion or removal of the forms when the curb presents a neat appearance and the surface is uniform in texture and color.
2. The curb shall conform to the cross section as shown except that the horizontal dimensions shall not vary more than 13 mm.

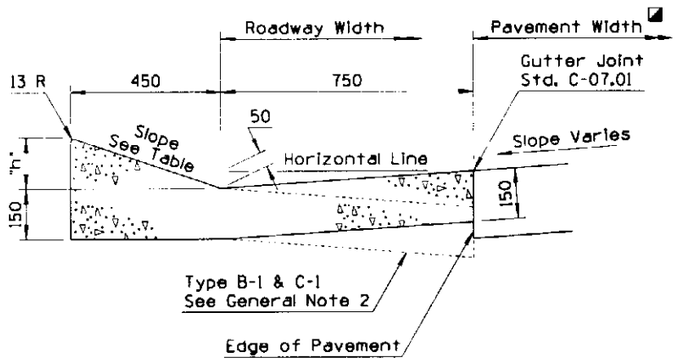

CURB AND GUTTER
TYPE B, C, B-1 & C-1

C & G TYPE	CURB HEIGHT "h"	SLOPE
B	150	1:3
B-1	150	1:3
C	75	1:6
C-1	75	1:6

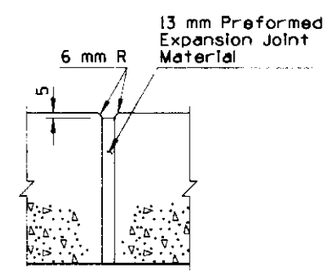

EXPANSION JOINT DETAIL

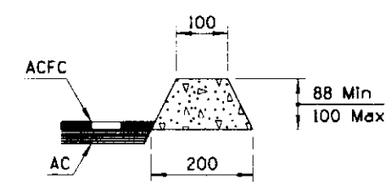

EMBANKMENT CURB

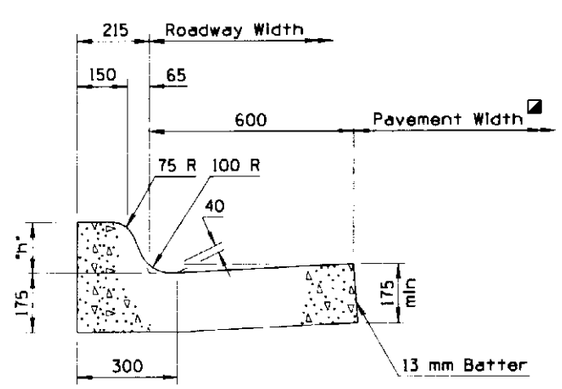

CURB AND GUTTER
TYPE G

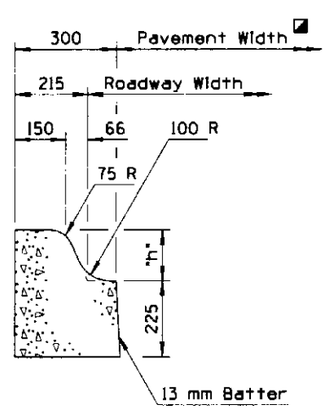

SINGLE CURB
TYPE G

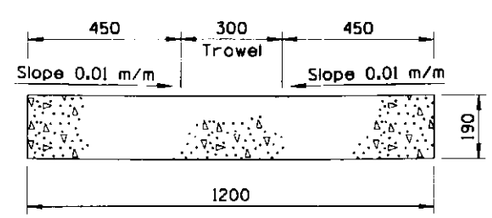

VALLEY GUTTER

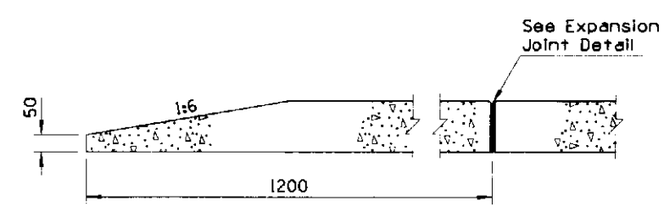

CURB TERMINAL SECTION

DESIGN APPROVED Terry H. Otterness	STATE OF ARIZONA DEPARTMENT OF TRANSPORTATION DIVISION OF HIGHWAYS STANDARD DRAWINGS	ISSUE 6/95
APPROVED FOR DISTRIBUTION Ronald Williams	SINGLE CURB, CURB & GUTTER, EMBANKMENT CURB	DRAWING NO. C-05.10

Metric

NO	DESCRIPTION OF REVISIONS	MADE BY	DATE
1			
2			
3			
4			

Metric

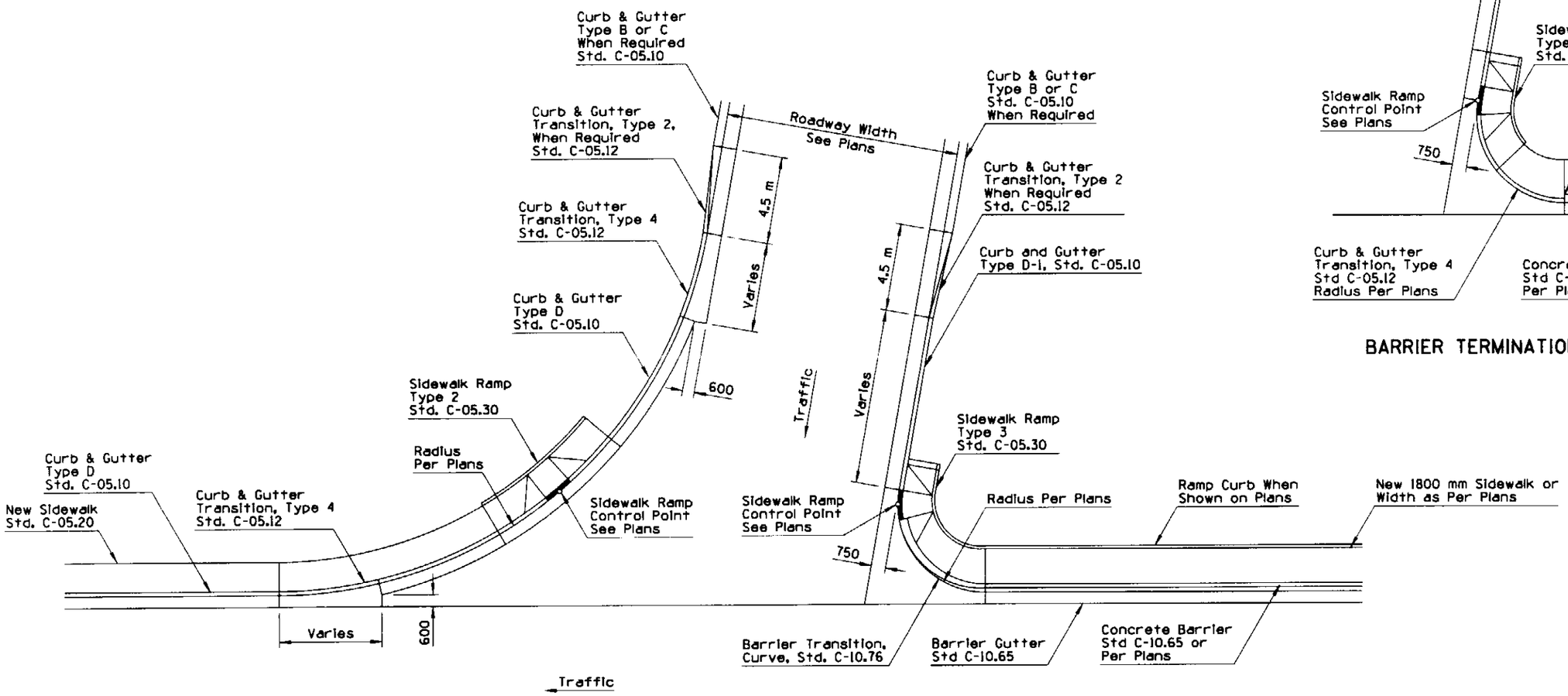

EXIT RAMP

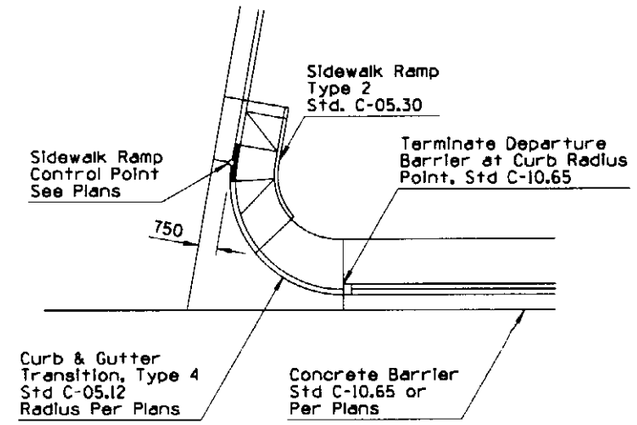

BARRIER TERMINATION ALTERNATE

DESIGN APPROVED	STATE OF ARIZONA DEPARTMENT OF TRANSPORTATION DIVISION OF HIGHWAYS STANDARD DRAWINGS	ISSUE 6/95
APPROVED FOR DISTRIBUTION	EXIT RAMP CURB AND GUTTER LAYOUT	DRAWING NO. C-05.11 Sheet 2 of 2

Metric

NO	DESCRIPTION OF REVISIONS	MADE BY	DATE
1			
2			
3			
4			

Metric

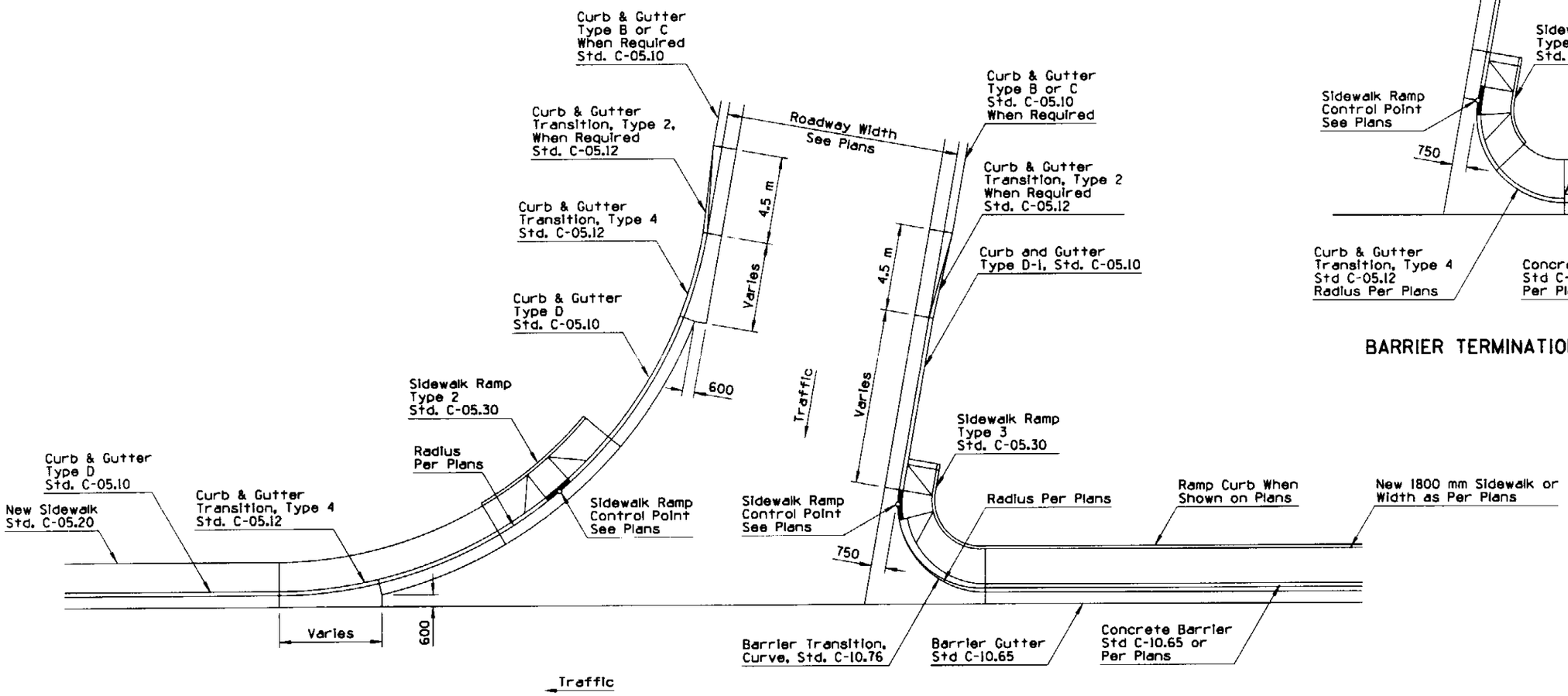

EXIT RAMP

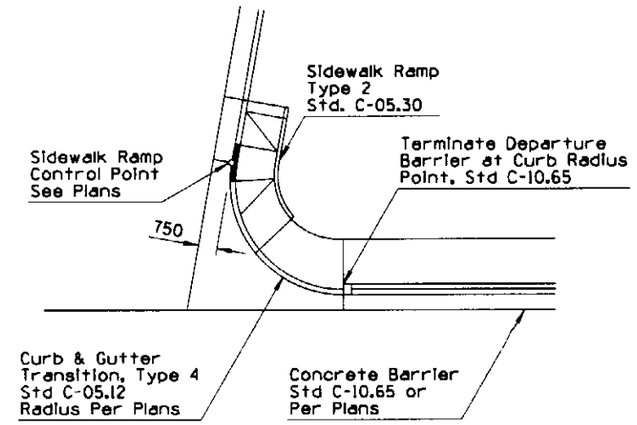

BARRIER TERMINATION ALTERNATE

DESIGN APPROVED	STATE OF ARIZONA DEPARTMENT OF TRANSPORTATION DIVISION OF HIGHWAYS STANDARD DRAWINGS	ISSUE 6/95
APPROVED FOR DISTRIBUTION	EXIT RAMP CURB AND GUTTER LAYOUT	DRAWING NO. C-05.11 Sheet 2 of 2

Metric

NO	DESCRIPTION OF REVISIONS	MADE BY	DATE
1			
2			
3			
4			

Metric

GENERAL NOTES

1. All gutter flow lines shall be constructed to an accurate grade.
2. See Slotted Drain Stds., C-13.60 and C-15.91, for curb and gutter with slotted drain.
3. See Std. C-05.10 for additional general notes and dimensions.

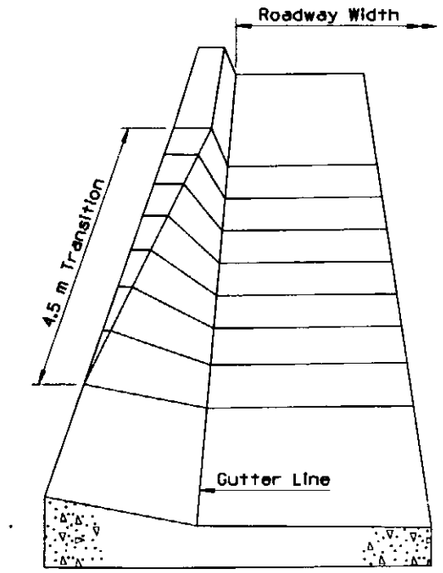

PERSPECTIVE VIEW

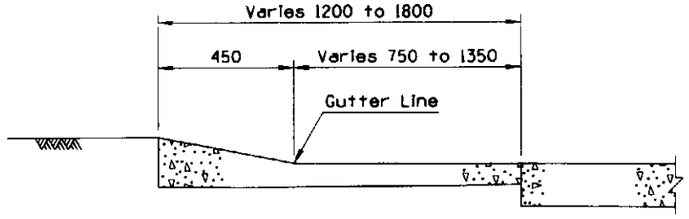

SECTION A-A

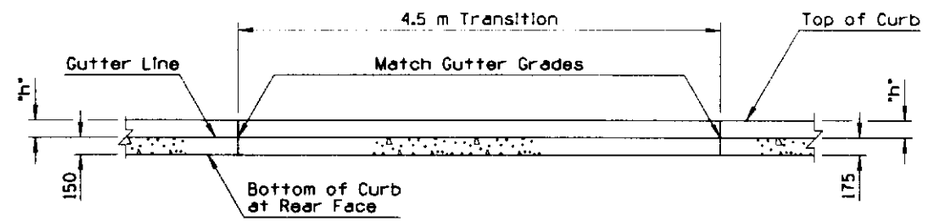

SECTION B-B

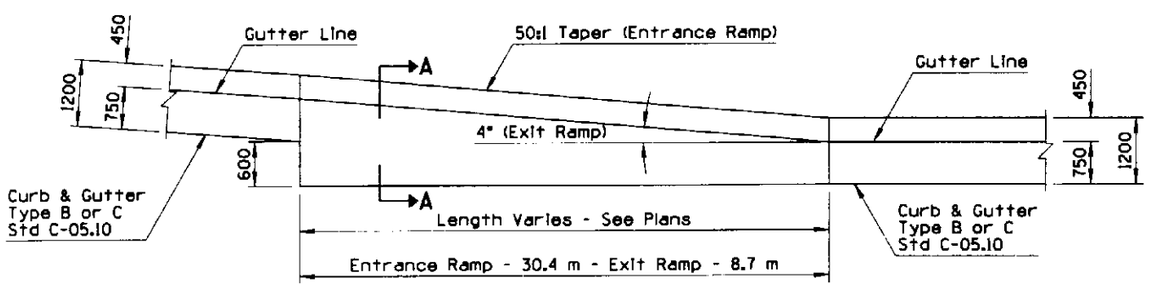

TYPE 1 - CURB & GUTTER TRANSITION - AT RAMP TAPERS

* Dimension may vary where exit occurs on curves, see plans

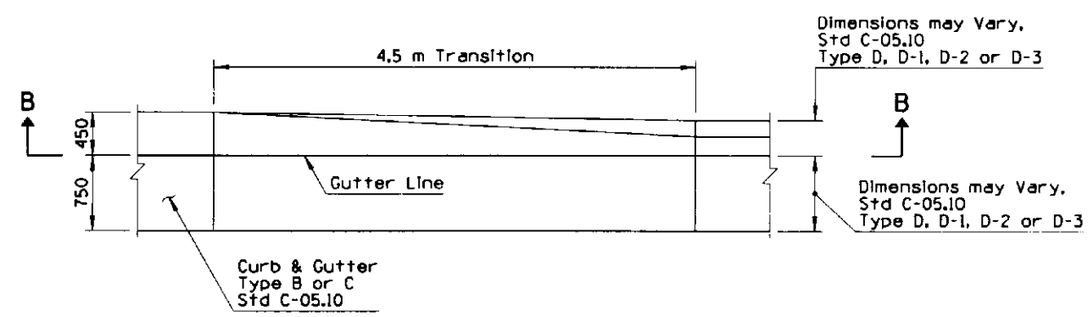

TYPE 2 - CURB & GUTTER TRANSITION

DESIGN APPROVED: Jerry H. Otterness	STATE OF ARIZONA DEPARTMENT OF TRANSPORTATION DIVISION OF HIGHWAYS STANDARD DRAWINGS	ISSUE 6/95
APPROVED FOR DISTRIBUTION: Ronald A. Williams	CURB & GUTTER TRANSITIONS	DRAWING NO. C-05.12 Sheet 1 of 3

Metric

NO	DESCRIPTION OF REVISIONS	MADE BY	DATE

Metric

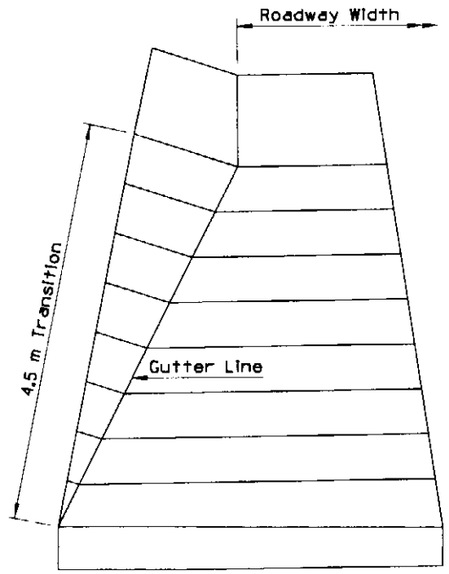

PERSPECTIVE VIEW

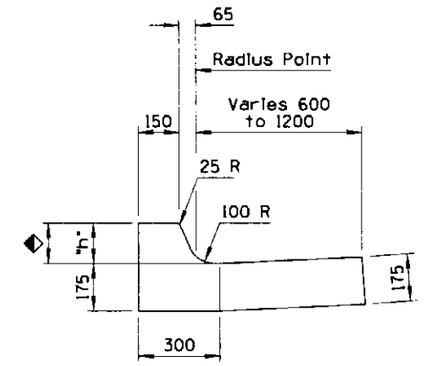

◆ Curb height varies 0 to 175 mm max in depressed curb area beyond the end of barrier. See Plans for curb height.

SECTION A-A

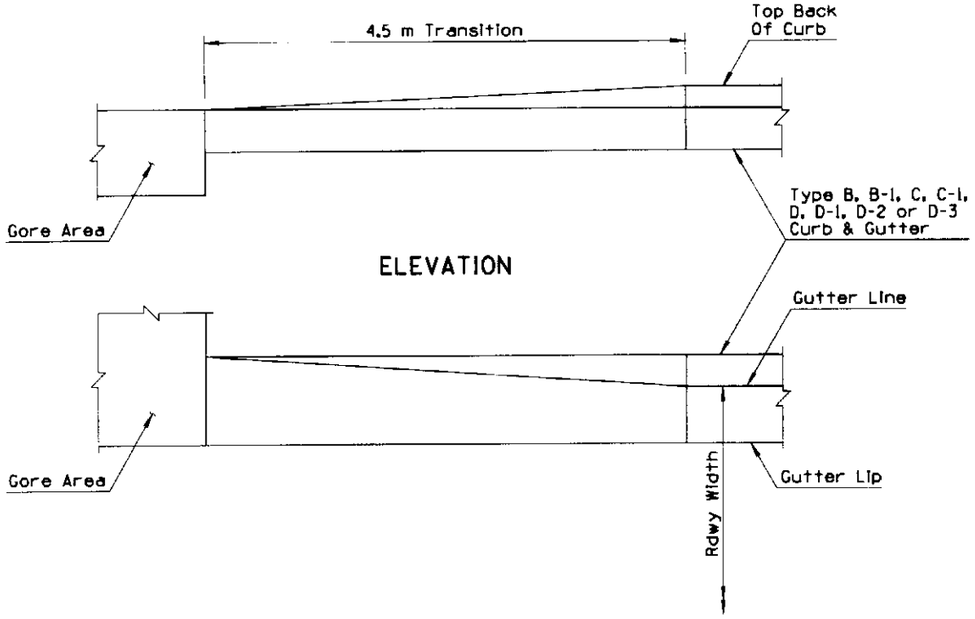

PLAN VIEW
TYPE 3 - CURB & GUTTER TRANSITION AT PAVED GORE

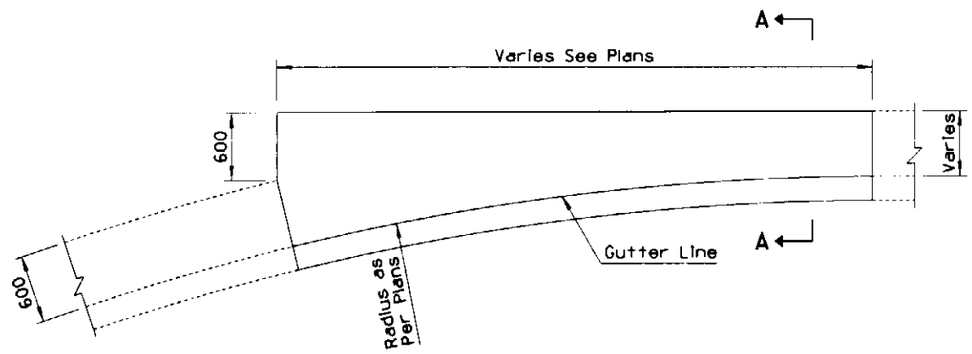

TYPE 4 - CURB & GUTTER TRANSITION

DESIGN APPROVED	STATE OF ARIZONA DEPARTMENT OF TRANSPORTATION DIVISION OF HIGHWAYS STANDARD DRAWINGS	ISSUE 6/95
APPROVED FOR DISTRIBUTION	CURB & GUTTER TRANSITIONS	DRAWING NO. C-05.12 Sheet 2 of 3

Metric

NO	DESCRIPTION OF REVISIONS	MADE BY	DATE
1			
2			
3			
4			

Metric

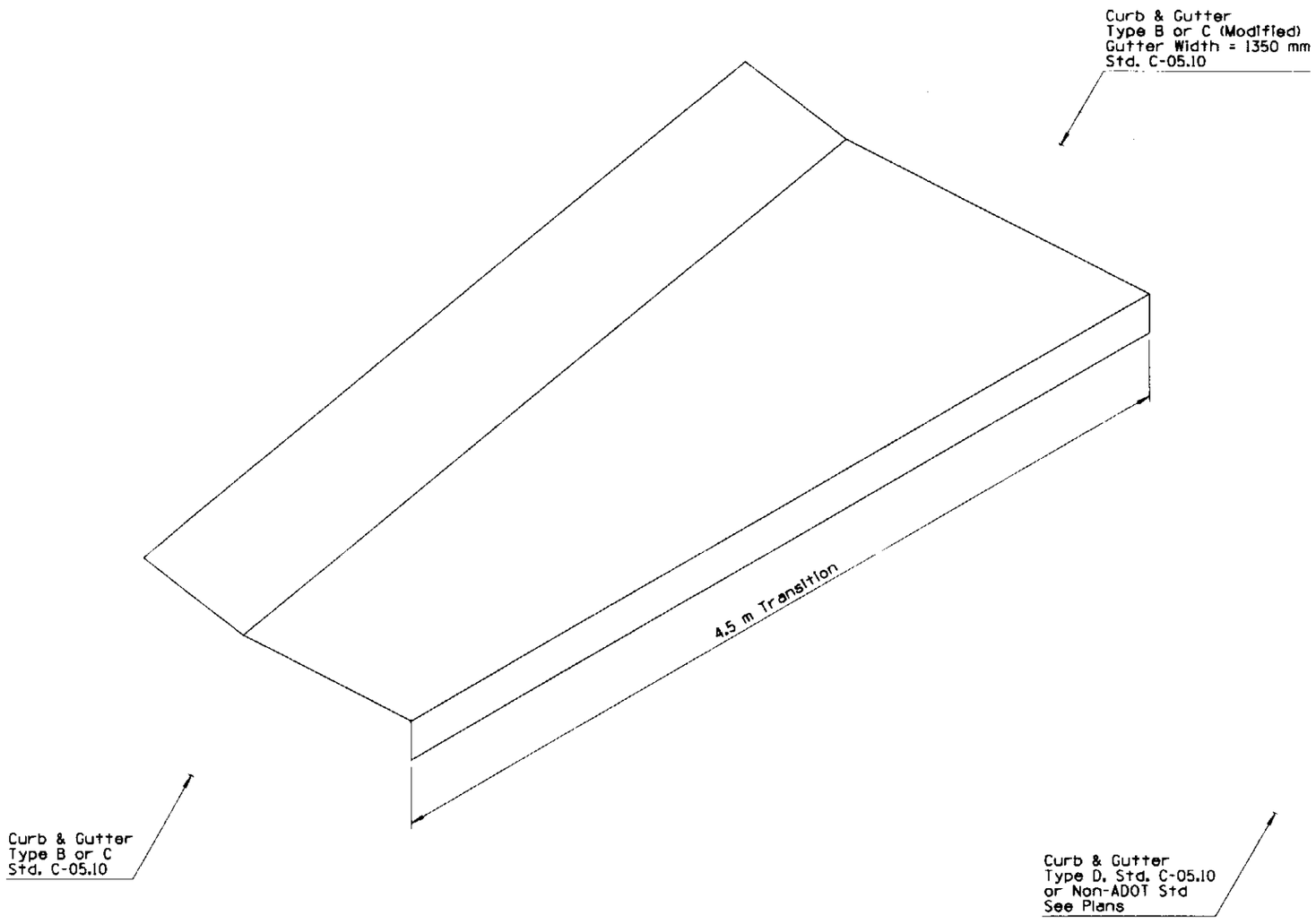

TYPE 5 - CURB & GUTTER TRANSITION

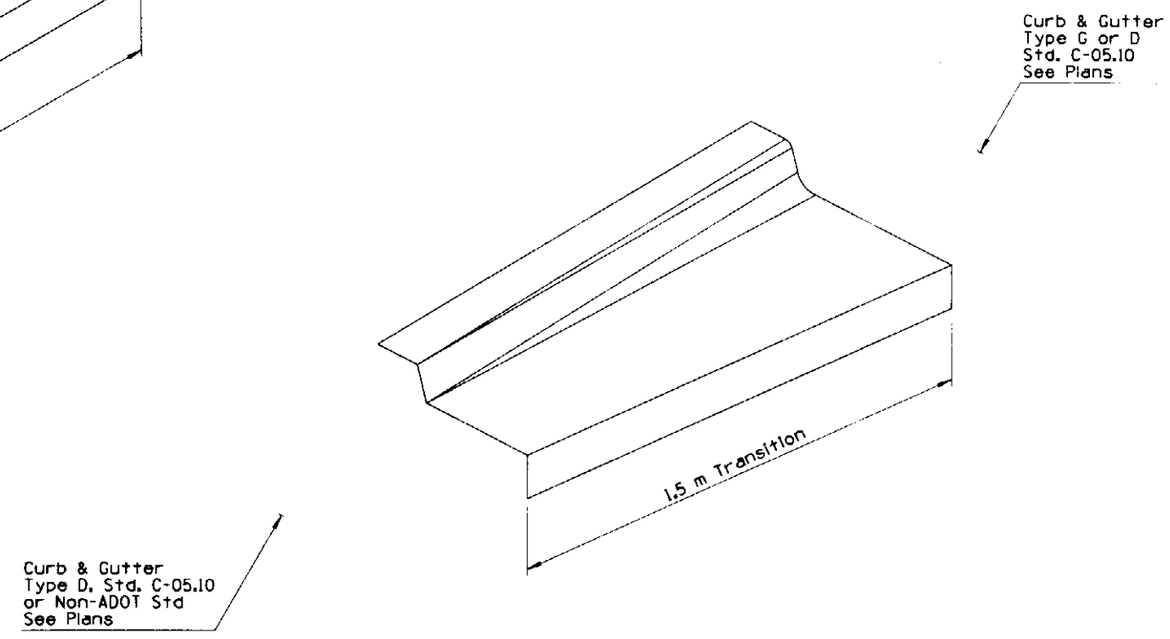

TYPE 6 - CURB & GUTTER TRANSITION

DESIGN APPROVED Terry H Otterness	STATE OF ARIZONA DEPARTMENT OF TRANSPORTATION DIVISION OF HIGHWAYS STANDARD DRAWINGS	ISSUE 6/95
APPROVED FOR DISTRIBUTION Ronald A Williams	CURB & GUTTER TRANSITIONS	DRAWING NO. C-05.12 Sheet 3 of 3

Metric

NO.	DESCRIPTION OF REVISIONS	MADE BY	DATE

Metric

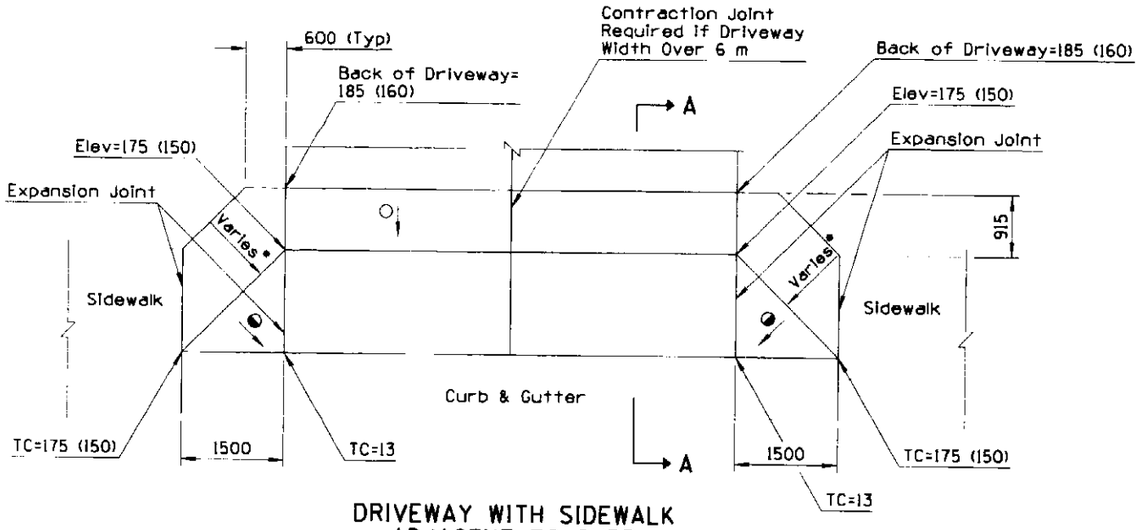

DRIVEWAY WITH SIDEWALK ADJACENT TO CURB

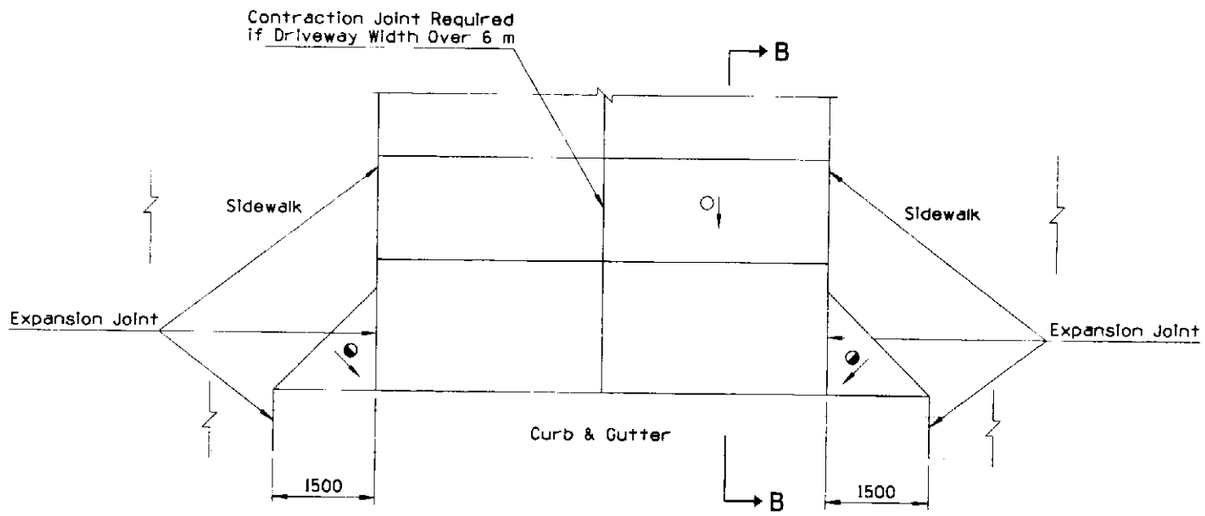

DRIVEWAY WITH SIDEWALK SETBACK

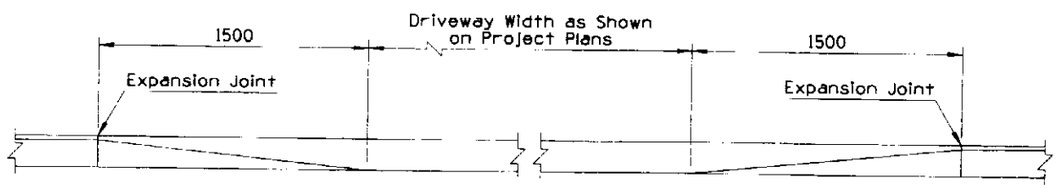

DEPRESSED CURB AT DRIVEWAY ENTRANCE

GENERAL NOTES

1. Unless otherwise specified, driveways shall be 150 mm in depth.
2. Transverse contraction joints, 50 mm deep, shall be placed in driveways if the driveway width is over 6 m. If the driveway thickness is greater than 150 mm, then the contraction joint depth shall be T/3, where T is the thickness of the driveway. Joints shall be either formed or sawed. Formed joints shall be finished with a tool having a 6 mm radius. See sheet 2 of 2 for the Contraction Joint Detail.
3. Expansion joints shall be located between driveways and sidewalks and all abutting structures. The 13 mm joint filler shall extend the full depth of the concrete. See sheet 2 of 2 for the Expansion Joint Detail.
4. Concrete shall be finished by means of a float, then steel trowelled and then broomed with a fine brush in a transverse direction.
5. Top of curb (TC) and driveway elevations shown are in relation to the gutter. Gutter=0.
6. When curb heights of 150 mm or less are shown on plans, use dimensions shown in ( )'s.
7. When curb heights of more than 175 mm are shown on plans, see plans.

LEGEND

- Cross slope (0.01 m/m (Typ))*
- Straight grade with downward slope.
- * Maximum slope = 0.02 m/m

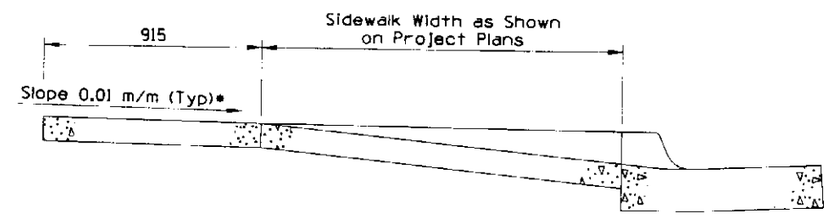

SECTION A-A

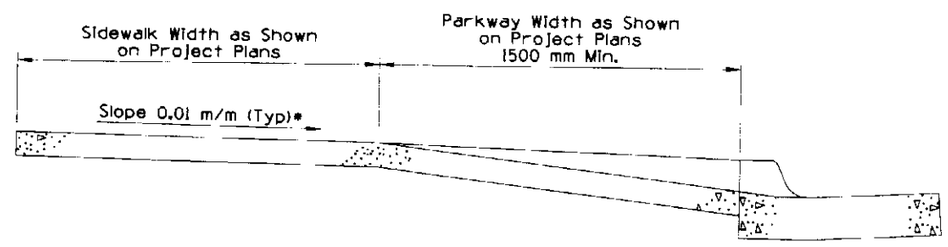

SECTION B-B

DESIGN APPROVED	STATE OF ARIZONA DEPARTMENT OF TRANSPORTATION DIVISION OF HIGHWAYS STANDARD DRAWINGS	ISSUE 6/95
APPROVED FOR DISTRIBUTION	CONCRETE DRIVEWAYS & SIDEWALKS DRIVEWAYS	DRAWING NO. C-05.20 Sheet 1 of 2

Metric

NO	DESCRIPTION OF REVISIONS	MADE BY	DATE
1			
2			
3			
4			

Metric

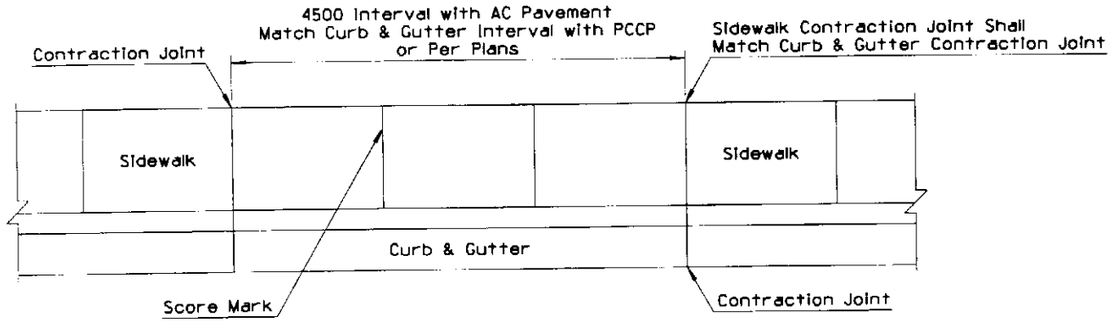

SIDEWALK ADJACENT TO CURB

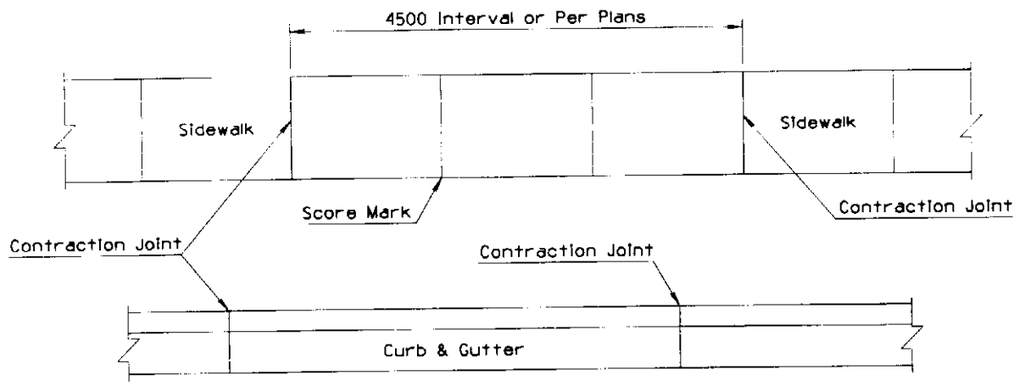

SIDEWALK SETBACK FROM CURB

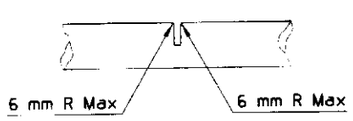

CONTRACTION JOINT DETAIL

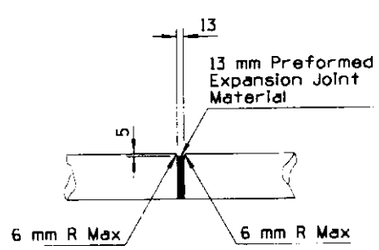

EXPANSION JOINT DETAIL

GENERAL NOTES

1. Unless otherwise specified, sidewalks shall be 100 mm in depth.
2. Transverse contraction joints, 25 mm deep, shall be placed in sidewalks at intervals of approximately 4.5 m or at a spacing that matches adjacent curb and gutter. If the sidewalk is over 2.2 m in width, a 50 mm deep longitudinal contraction joint shall be placed in the center of the sidewalk. The maximum area of sidewalk without contraction joints or scoring lines shall be approximately 3.4 m^2. Joints shall be either formed or sawed. Formed joints shall be finished with a tool having a 6 mm radius.
3. Expansion joints shall be located between sidewalks and driveways and all abutting structures. Expansion joints shall match the joints in the adjacent concrete pavement or existing concrete curb and sidewalk. Maximum length of sidewalk without an expansion joint shall be 18 transverse meters. The 13 mm joint filler shall extend the full depth of the concrete.
4. Concrete shall be finished by means of a float, then steel troweled and then broomed with a fine brush in a transverse direction.
5. Sidewalks shall be constructed to a desirable width of 1500 mm on major streets, a minimum width of 1200 mm on residential streets or as shown on the plans.
6. Scoring lines shall be 6 mm in depth. They shall be placed at 1500 mm spacing when the contraction joint interval is 4500 mm and at 1800 mm spacing when the contraction joint interval is 3600 mm.

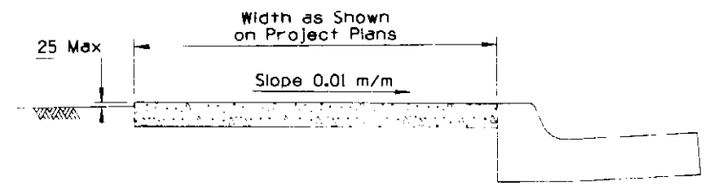

CONCRETE SIDEWALK ADJACENT TO CURB

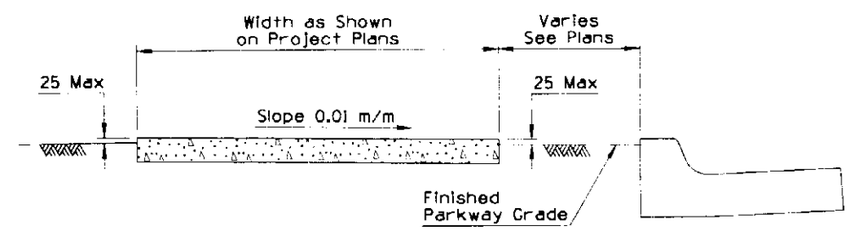

CONCRETE SIDEWALK SETBACK FROM CURB

DESIGN APPROVED APPROVED FOR DISTRIBUTION	STATE OF ARIZONA DEPARTMENT OF TRANSPORTATION DIVISION OF HIGHWAYS STANDARD DRAWINGS	ISSUE 6/95
	CONCRETE DRIVEWAYS & SIDEWALKS SIDEWALKS	DRAWING NO. C-05.20 Sheet 2 of 2

Metric

NO	DESCRIPTION OF REVISIONS	MADE BY	DATE
1			
2			
3			
4			

Metric

GENERAL NOTES

1. Top of curb (TC) and top of ramp elevations shown are in relation to the gutter. Gutter=0.
2. See Std C-05.10, C-05.11 and C-05.20 for joint requirements.
3. When curb heights of 150 mm are shown on plans, use dimensions shown in ( )'s.
4. If field modification is required, bottom width shall be 1200 mm minimum, as per ADA requirements.

● Use type A1 curb if median is to be landscaped.

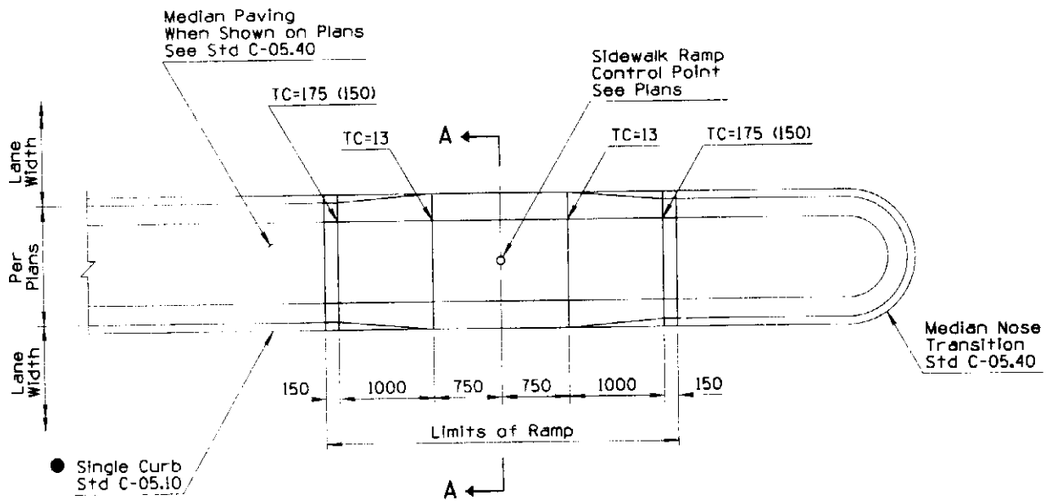

PLAN

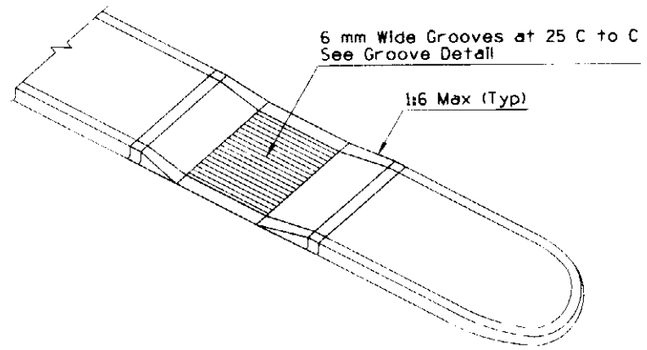

PERSPECTIVE

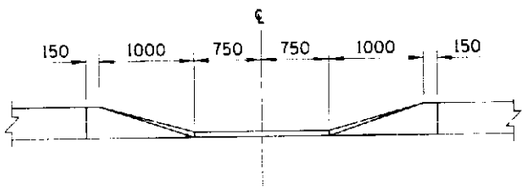

ELEVATION
DEPRESSED CURB AT SIDEWALK RAMP

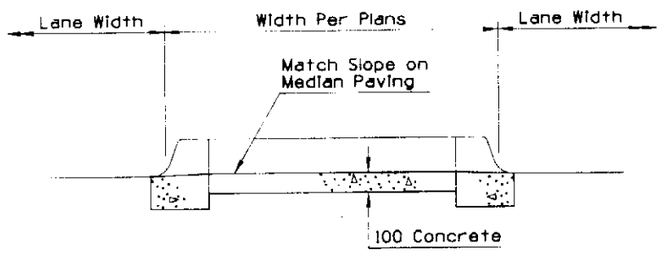

SECTION A-A

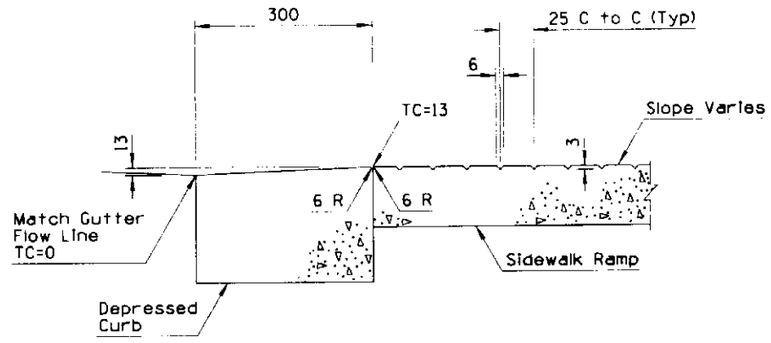

GROOVE DETAIL

DESIGN APPROVED Henry H. Otterness	STATE OF ARIZONA DEPARTMENT OF TRANSPORTATION DIVISION OF HIGHWAYS STANDARD DRAWINGS	ISSUE 6/95
APPROVED FOR DISTRIBUTION Ronald Williams	SIDEWALK RAMP TYPE I	DRAWING NO. C-05.30 Sheet 1 of 4

Metric

NO	DESCRIPTION OF REVISIONS	MADE BY	DATE
1			
2			
3			
4			

Metric

GENERAL NOTES

1. Top of curb (TC) and top of ramp elevations shown are in relation to the gutter and are located radially. Gutter=0.
2. See Std C-05.10, C-05.11 and C-05.20 for joint requirements.
3. When curb heights of 150 mm or less are shown on plans, use dimensions shown in ( )'s.
4. When curb heights of more than 175 mm are shown on plans, see plans and ADA requirements.

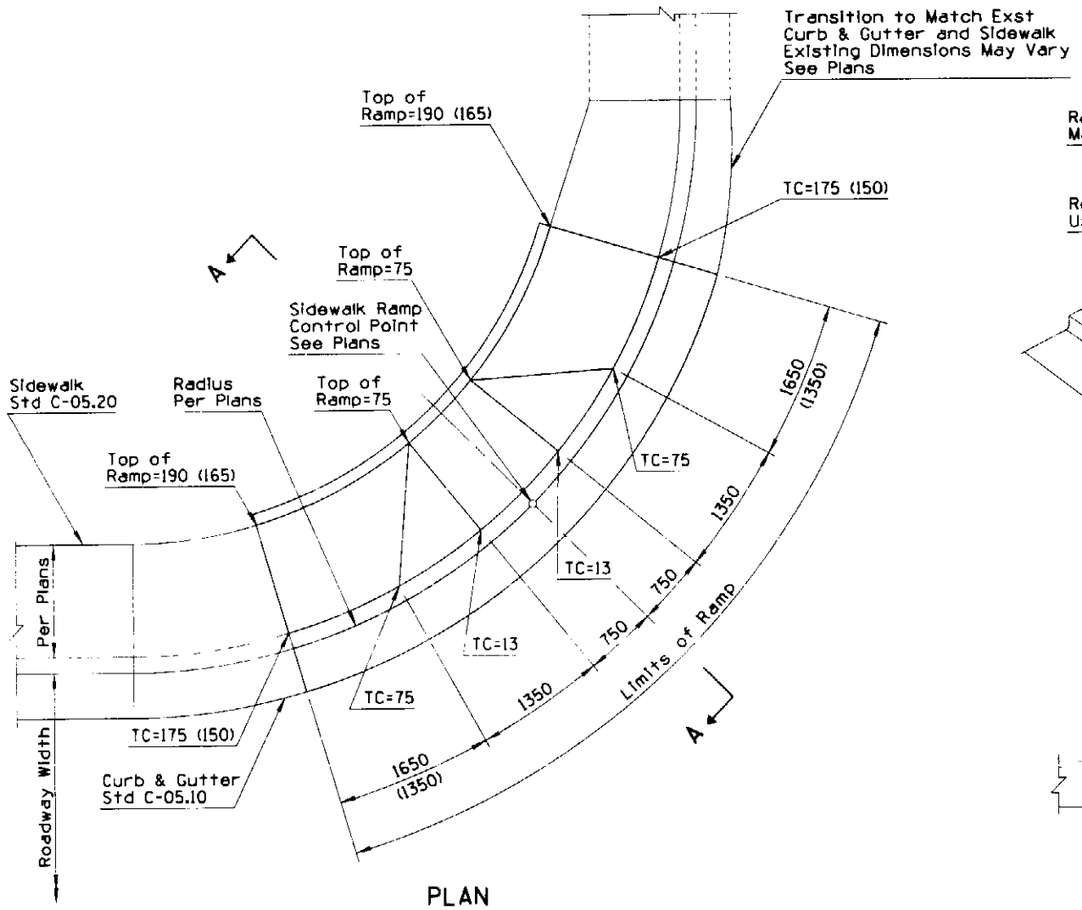

PLAN

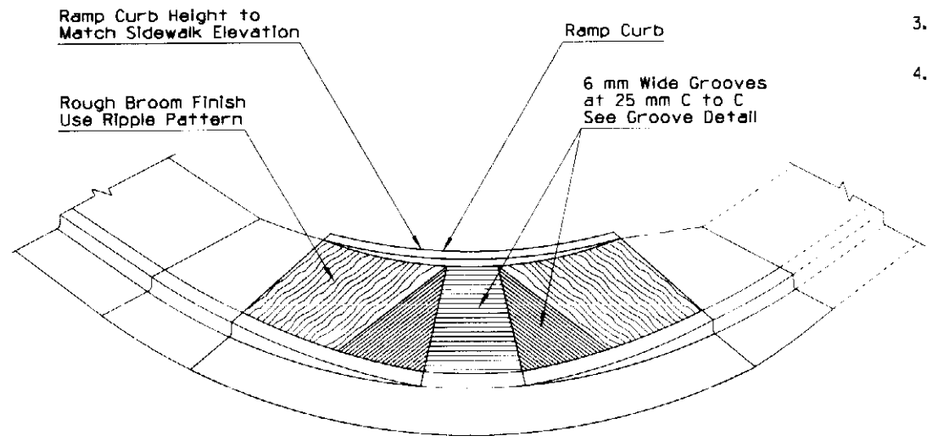

PERSPECTIVE

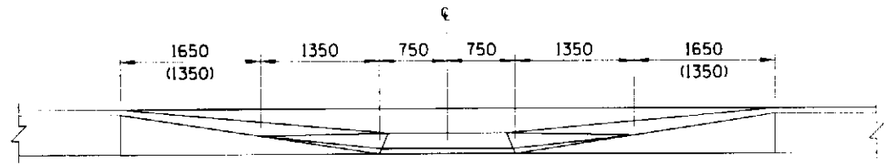

ELEVATION
DEPRESSED CURB AT SIDEWALK RAMP

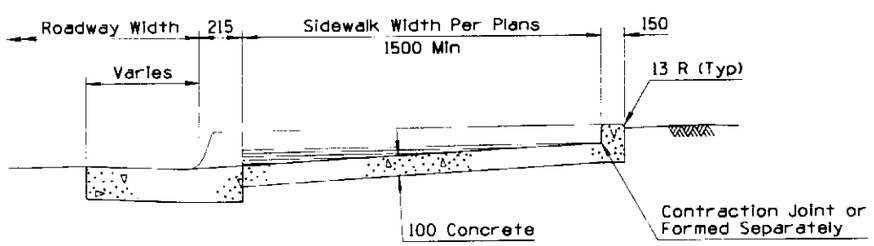

SECTION A-A

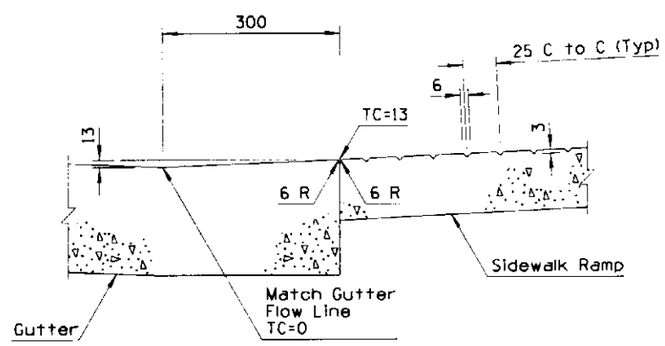

GROOVE DETAIL

DESIGN APPROVED	STATE OF ARIZONA DEPARTMENT OF TRANSPORTATION DIVISION OF HIGHWAYS STANDARD DRAWINGS	ISSUE 6/95
APPROVED FOR DISTRIBUTION	SIDEWALK RAMP TYPE 2	DRAWING NO. C-05.30 Sheet 2 of 4

Metric

NO	DESCRIPTION OF REVISIONS	MADE BY	DATE
1			
2			
3			
4			

Metric

GENERAL NOTES

1. Top of curb (TC) elevations shown are in relation to the gutter and are located radially. Gutter=0.
2. See Std C-05.10, C-05.11 and C-05.20 for joint requirements.

● 1:16 Maximum Slope.

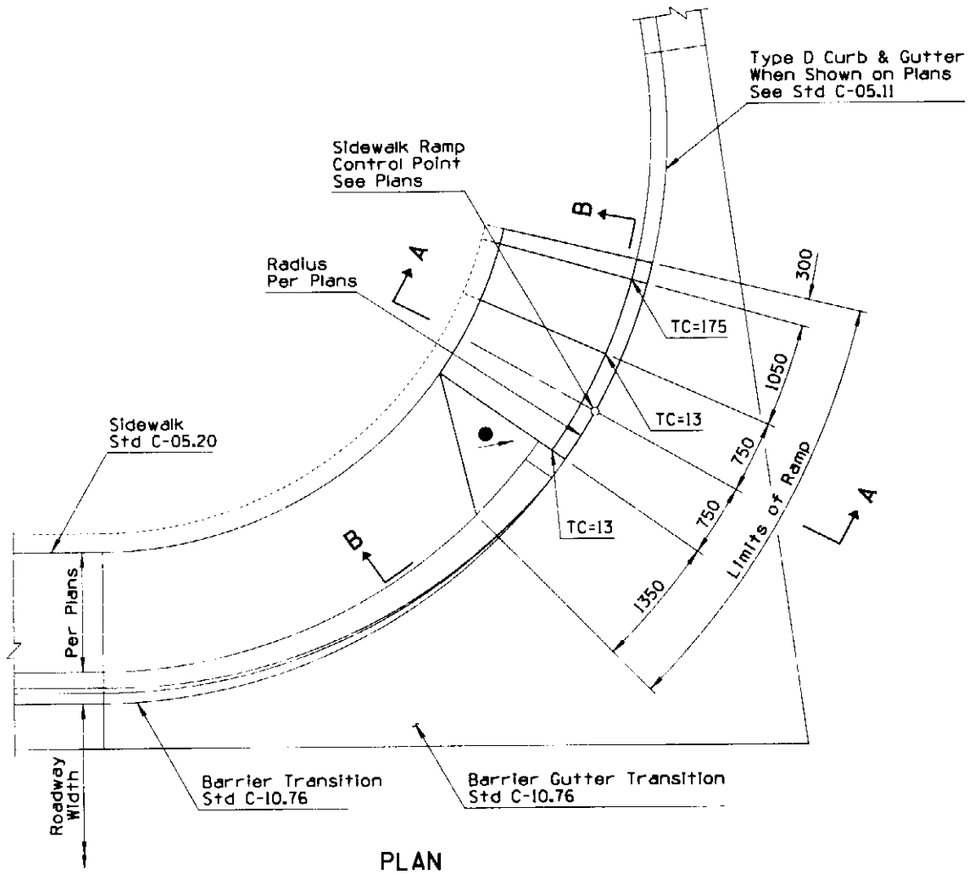

PLAN

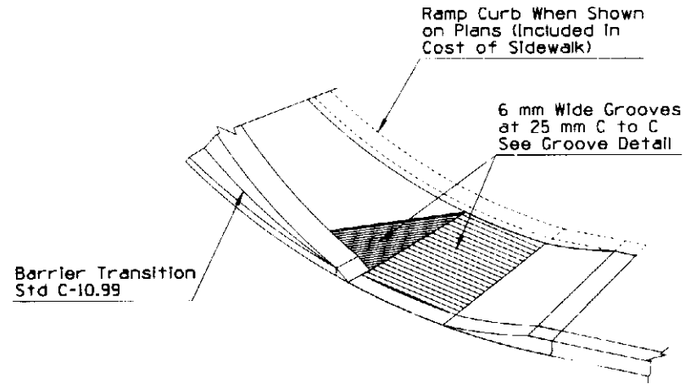

PERSPECTIVE

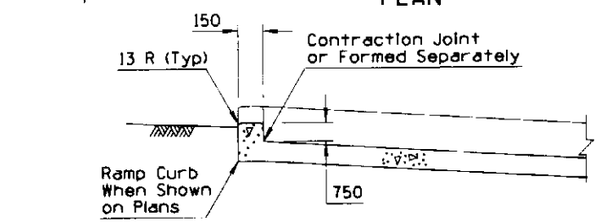

WITH RAMP CURB

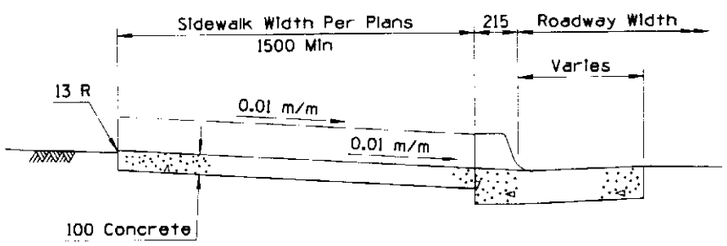

WITHOUT RAMP CURB

SECTION A-A

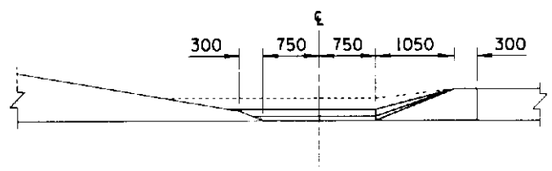

ELEVATION
DEPRESSED CURB AT SIDEWALK RAMP

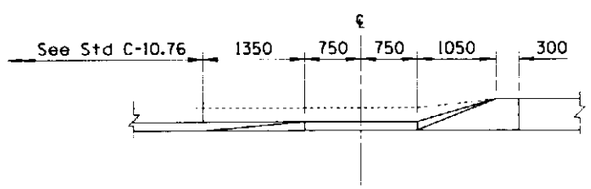

SECTION B-B

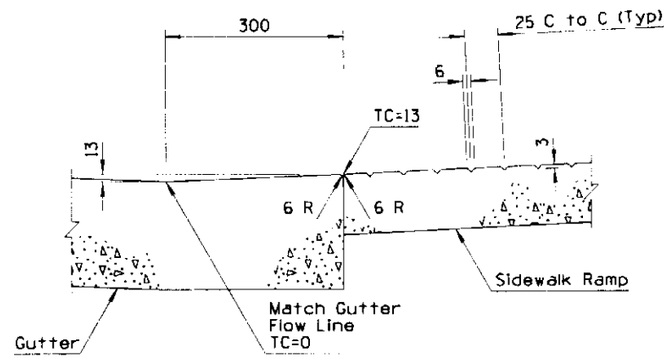

GROOVE DETAIL

DESIGN APPROVED	STATE OF ARIZONA DEPARTMENT OF TRANSPORTATION DIVISION OF HIGHWAYS STANDARD DRAWINGS	ISSUE 6/95
APPROVED FOR DISTRIBUTION	SIDEWALK RAMP TYPE 3	DRAWING NO. C-05.30 Sheet 3 of 4

Metric

NO	DESCRIPTION OF REVISIONS	MADE BY	DATE

Metric

GENERAL NOTES

1. Top of curb (TC) and top of ramp elevations shown are in relation to the gutter. Gutter=0.
2. See Std C-05.10, C-05.11 and C-05.20 for joint requirements.
3. When curb heights of 150 mm or less are shown on plans, use dimensions shown in ( )'s.
4. When curb heights of more than 175 mm are shown on plans, see plans and ADA requirements.

● For sidewalk widths greater than 1940 mm the overall sidewalk ramp width shall match the sidewalk width.

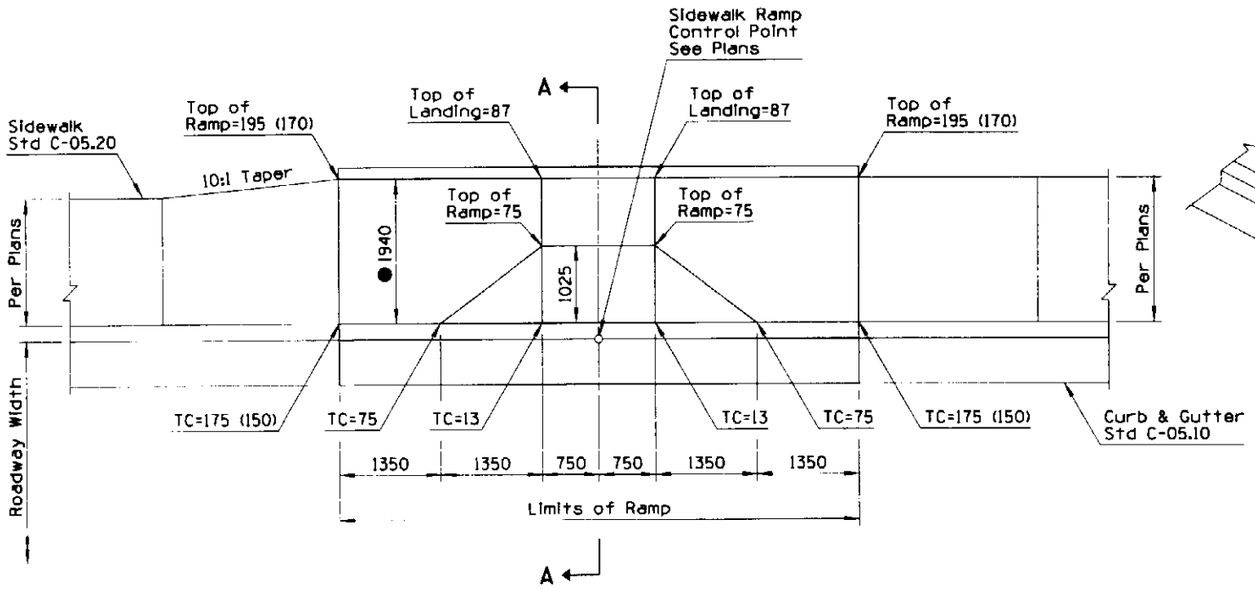

PLAN

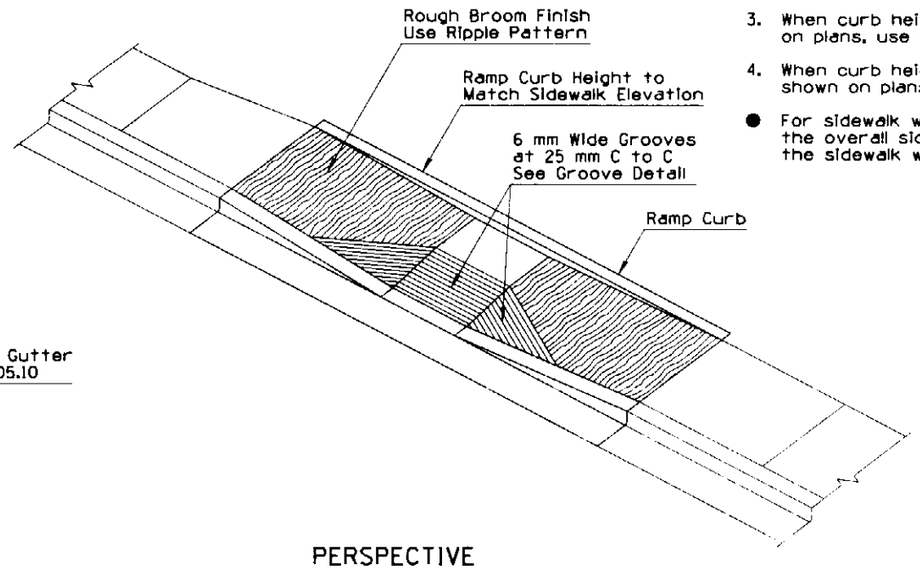

PERSPECTIVE

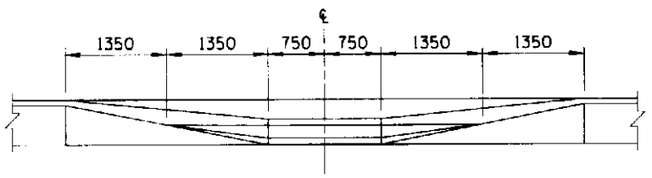

ELEVATION
DEPRESSED CURB AT SIDEWALK RAMP

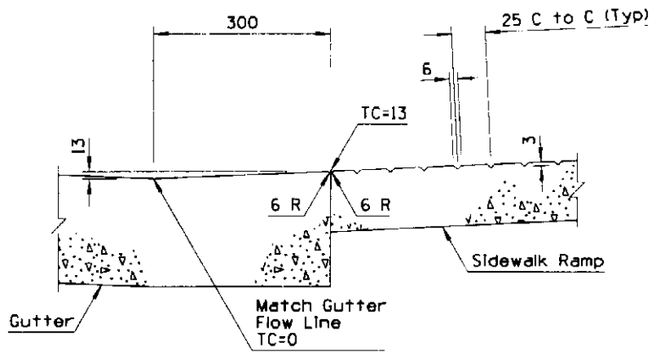

GROOVE DETAIL

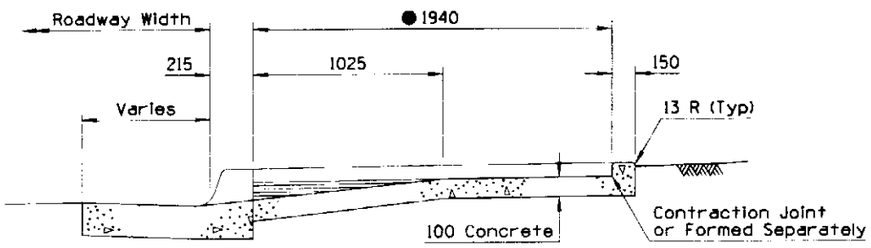

SECTION A-A

DESIGN APPROVED	STATE OF ARIZONA DEPARTMENT OF TRANSPORTATION DIVISION OF HIGHWAYS STANDARD DRAWINGS	ISSUE 6/95
APPROVED FOR DISTRIBUTION	SIDEWALK RAMP TYPE 4	DRAWING NO. C-05.30 Sheet 4 of 4

Metric

NO	DESCRIPTION OF REVISIONS	MADE BY	DATE
1			
2			
3			
4			

Metric

GENERAL NOTES

1. Traffic signal foundations, traffic sign foundations and pull boxes for traffic signs and traffic signals shall be installed prior to placement of median paving.
2. See Std C-05.10, C-05.11 and C-05.20 for joint requirements.
3. Decorative median paving shall be stamped concrete, concrete pavers or as specified on the project plans.
4. Decorative median paving shall not be placed on a median nose transition or on a median island on a structure.
5. A 100 mm x 150 mm concrete header shall be used to end decorative paving at locations when concrete sidewalk ramps are not present.
6. Median nose transitions shall not be placed on departure ends of raised medians.
7. Top of curb (TC) and top of ramp elevations shown are in relation to the gutter, Gutter=0.
8. When curb heights of 150 mm are shown on plans, use dimensions shown in ( )'s.
9. See Structure Plans for raised median on structures.

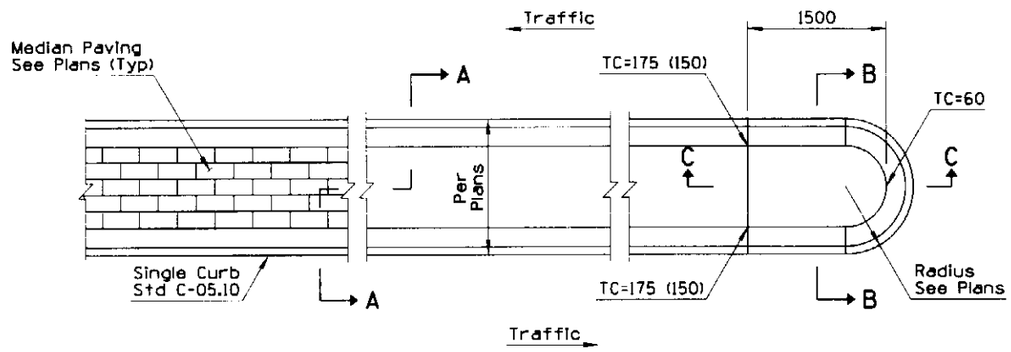

PLAN

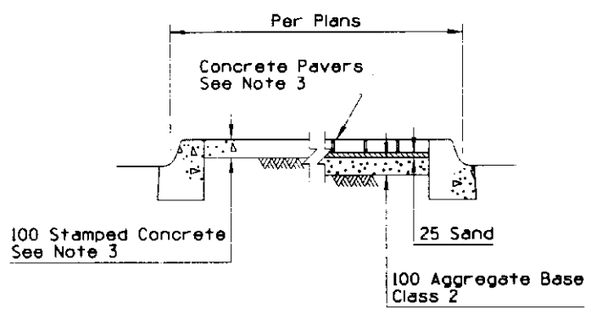

SECTION A-A

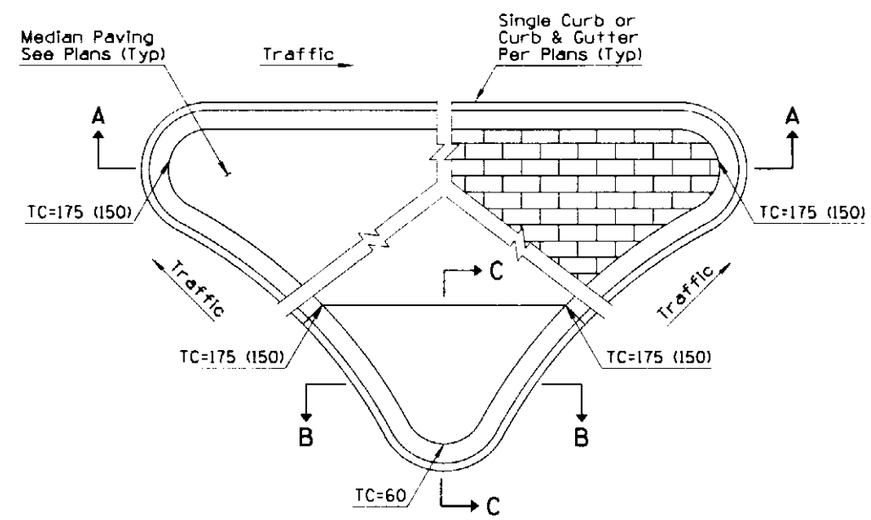

NOSE TRANSITION LAYOUT

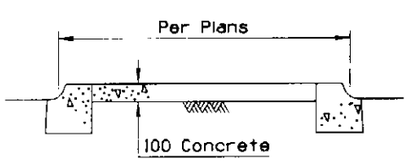

SECTION B-B

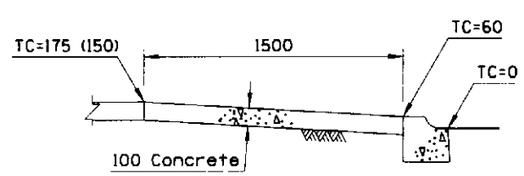

SECTION C-C

DESIGN APPROVED	STATE OF ARIZONA DEPARTMENT OF TRANSPORTATION DIVISION OF HIGHWAYS STANDARD DRAWINGS	ISSUE 6/95
APPROVED FOR DISTRIBUTION	MEDIAN PAVING AND NOSE TRANSITION	DRAWING NO. C-05.40

Metric

NO	DESCRIPTION OF REVISIONS	MADE BY	DATE
1			
2			
3			
4			

Metric

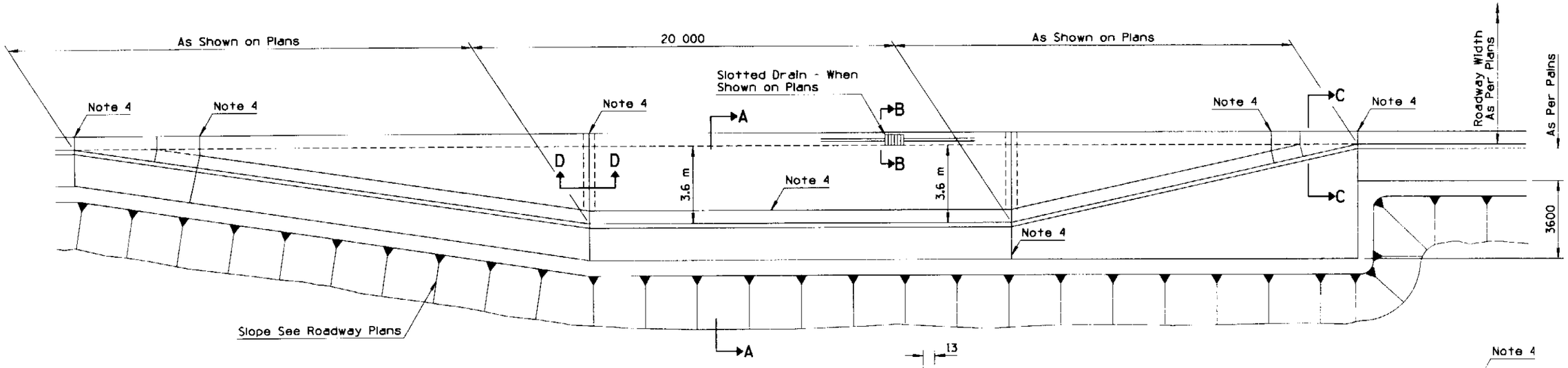

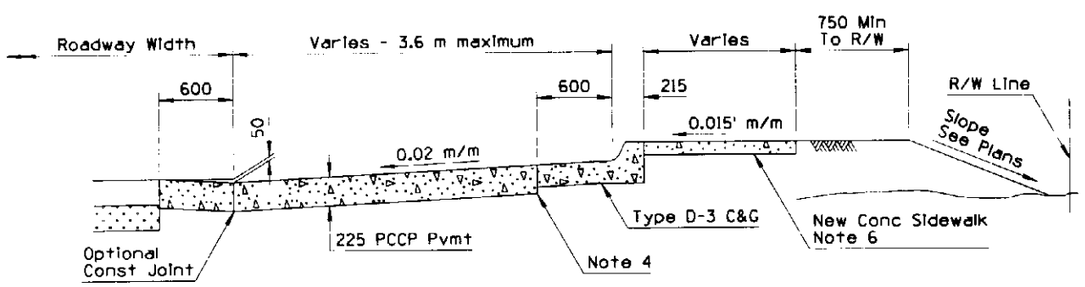

SECTION A-A

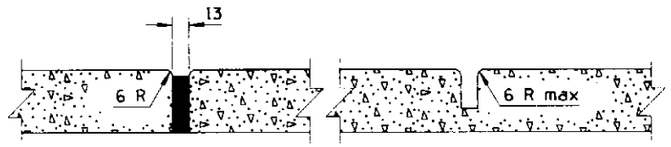

EXPANSION JOINT CONTRACTION JOINT

DETAIL A

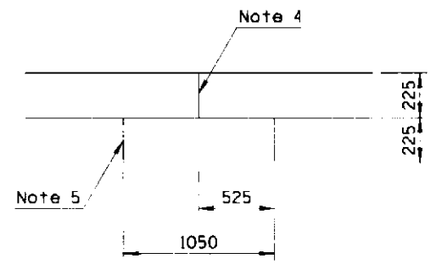

SECTION D-D

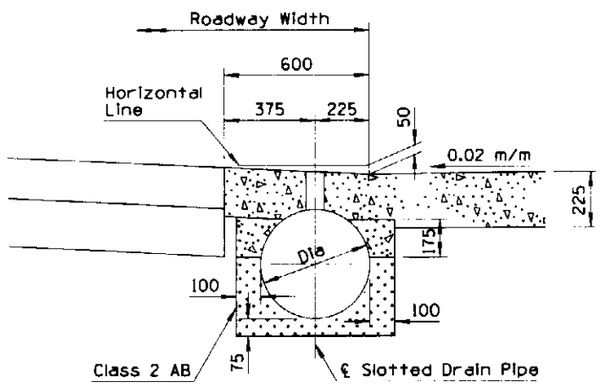

SECTION B-B

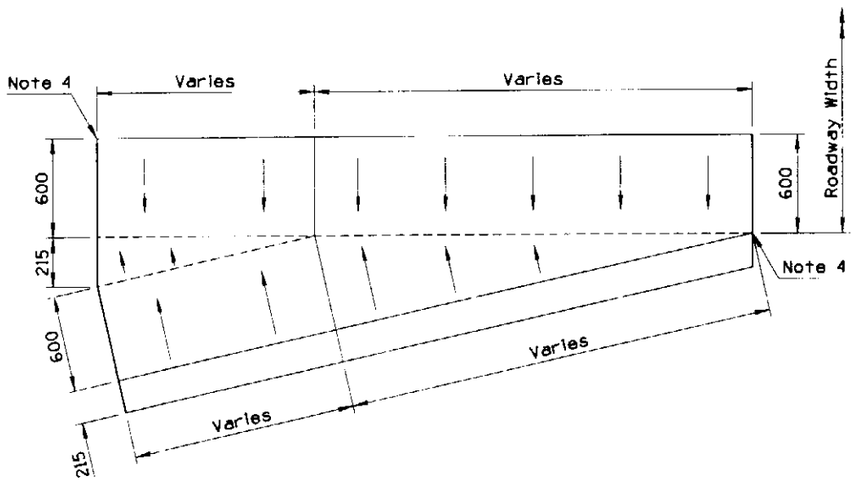

PLAN VIEW OF SECTION C-C

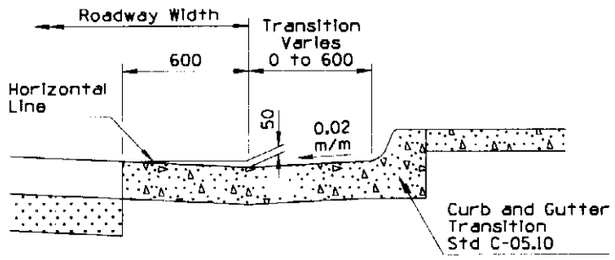

SECTION C-C

GENERAL NOTES

1. The PCCP surfaces within the bus bay area shall be textured transversly. Surface texturing to conform to Section 401.
2. Transverse weakened plane joints shall be constructed at a maximum spacing of 4.5 m and shall align with joints in the concrete curb and gutter.
3. For additional data on slotted drains, See slotted drain Stds C-13.60.
4. For 13 mm expansion joint with preformed joint fillers, See Detail A.
5. Concrete pad to be poured separately from concrete bus bay pavement.
6. For sidewalk construction details, see Std. C-05.20.

DESIGN APPROVED	STATE OF ARIZONA DEPARTMENT OF TRANSPORTATION DIVISION OF HIGHWAYS STANDARD DRAWINGS	ISSUE 6/95
APPROVED FOR DISTRIBUTION	CONCRETE BUS BAY	DRAWING NO. C-05.50

Metric

NO	DESCRIPTION OF REVISIONS	MADE BY	DATE

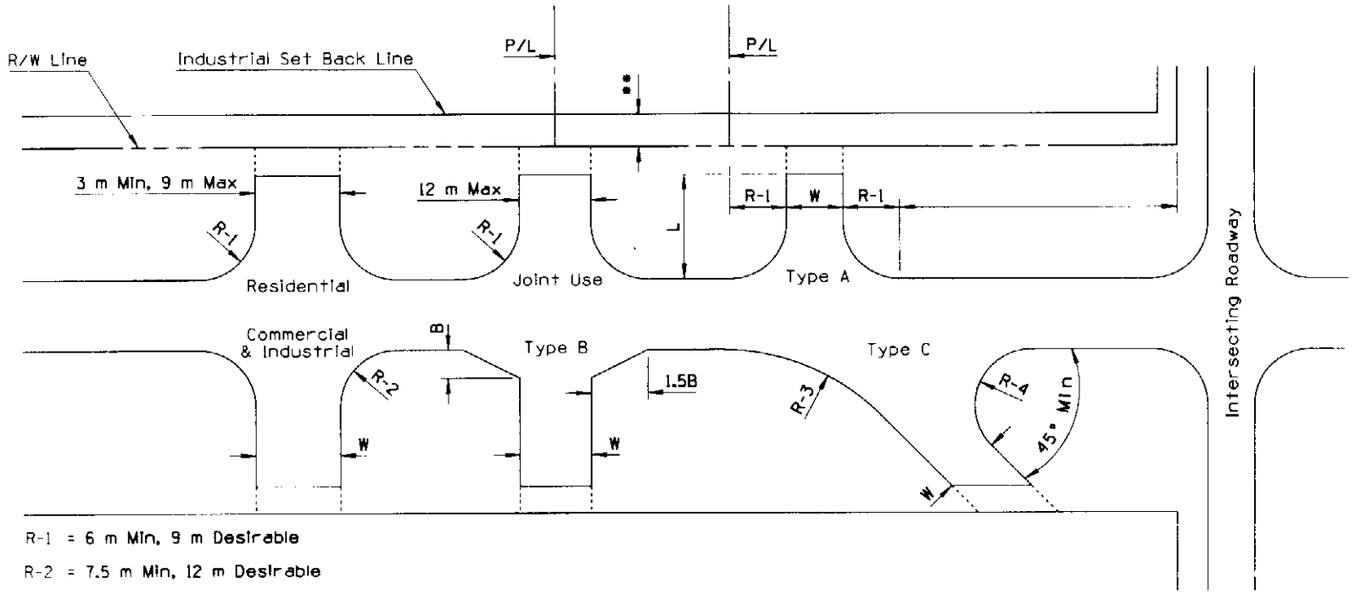

R-1 = 6 m Min, 9 m Desirable

R-2 = 7.5 m Min, 12 m Desirable

R-3 = 24 m

R-4 = 6 m Min

W = 7.5 m Min, 12 m Max

** - See Proper City or County Regulation

RURAL DEVELOPMENTS

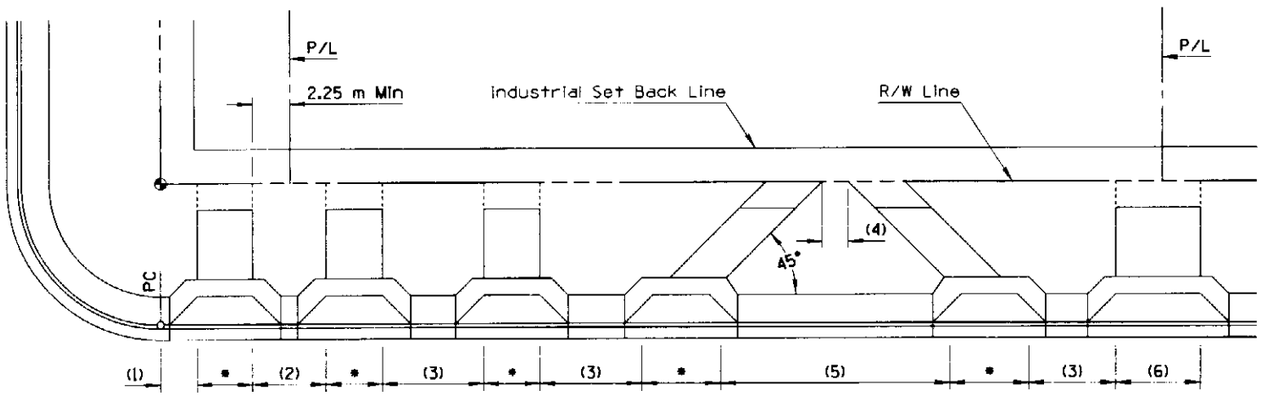

(1) 3 m Min, 6 m Desirable

(2) 4.5 m Min

(3) 7.5 m Min, 12 m Desirable

(4) 12 m Min

(5) One Way Couplet for Use Only on One Way Roadways

(6) 12 m Max Joint Use Driveways

Residential - 3 m Min, 9 m Max

Commercial - One Way: 4.5 m Min, 9 m Max
Two Way: 7.5 m Min, 12 m Max

Industrial - 6 m Min, 12 m Max

URBAN DEVELOPMENTS

GENERAL NOTES

1. Driveway types:

   Residential - one providing access to a single family residence, to a duplex, or to an apartment building containing five or fewer dwelling units.

   Commercial - one providing access to an office, retail or institutional building or to an apartment building having more than five dwelling units.

   Industrial - one directly serving a substantial number of truck movements to and from loading docks of an industrial facility, warehouse or truck terminal.

2. Joint use driveways may become desirable for landowners of adjacent properties to service both properties. If this is the case, only one of the two adjacent landowners need apply for the access permit, but a notorized written mutual agreement, signed by all parties invloved, must accompany the application form.

3. Driveways for high volume traffic generators shall be approved individually by Traffic Engineering section.

4. Driveways with curb returns in urban areas shall be installed only with the approval of Traffic Engineering section.

5. Driveways and depressed curbs shall be located as noted on plans or as directed by the Engineer.

6. Drainage structures shall be provided under driveways where necessary.

7. Dimensions indicated as minimum shall be avoided whenever possible in favor of those indicated as desirable.

8. The Type "A" turnout is the preferable turnout design. Type "B" and "C" shall only be used when absolutely necessary.

9. Paved turnouts, plans notation, will be W X L, surface material, type and standard. Example: 6 m x 9 m ACTO, Type A, Std C-06.10. Show radius (R) graphically.

10. Construction of curb, gutter, sidewalk and drainage facilities in urban areas by the permittee along that portion of the highway frontage under permit application, may be a stipulation of the permit approval if there appears to be reasonable need.

11. Excavation or embankment for turnouts shall be included in quantities for main roadways.

12. Base material shall be the same as that shown for main roadway, unless otherwise noted.

13. Desirable sideslope rates for rural turnouts are 1:6.

DESIGN APPROVED	STATE OF ARIZONA DEPARTMENT OF TRANSPORTATION DIVISION OF HIGHWAYS STANDARD DRAWINGS	ISSUE 6/95
APPROVED FOR DISTRIBUTION	DRIVEWAY & TURNOUT LAYOUTS	DRAWING NO. C-06.10 Sheet 1 of 2

NO	DESCRIPTION OF REVISIONS	MADE BY	DATE
1			
2			
3			
4			

Metric

GENERAL NOTES

1. Grade as shown on plans or as negotiated between Property Owner and Engineer.
2. When field conditions require modifications to plans, contact Design Engineer for assistance.
3. See Sheet 1 of 2 for all other General Notes.

◑ Breakangle greater than 6% requires a vertical curve, L=(3 m Min). Vertical curve shall not encroach on roadway or sidewalk.

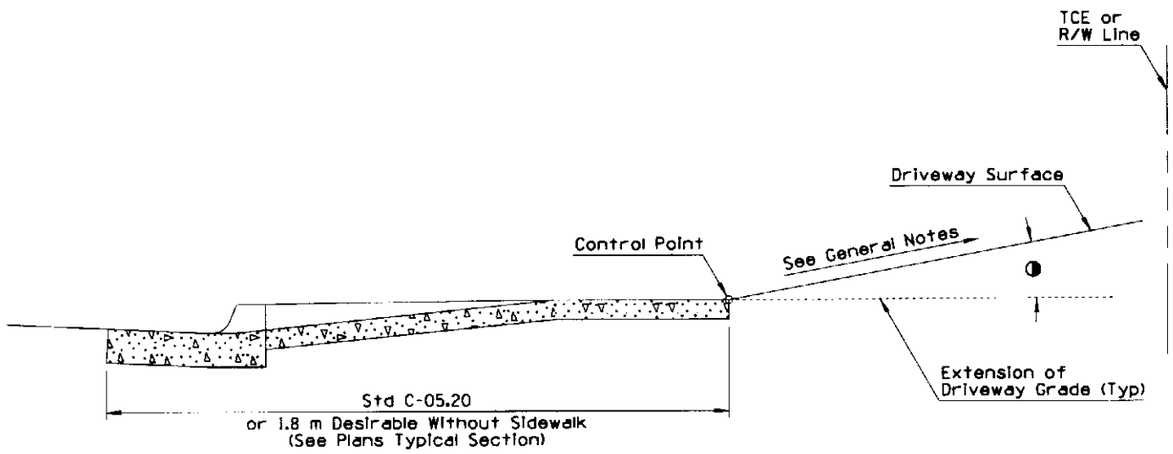

URBAN CROSS SECTION
(UP GRADE)

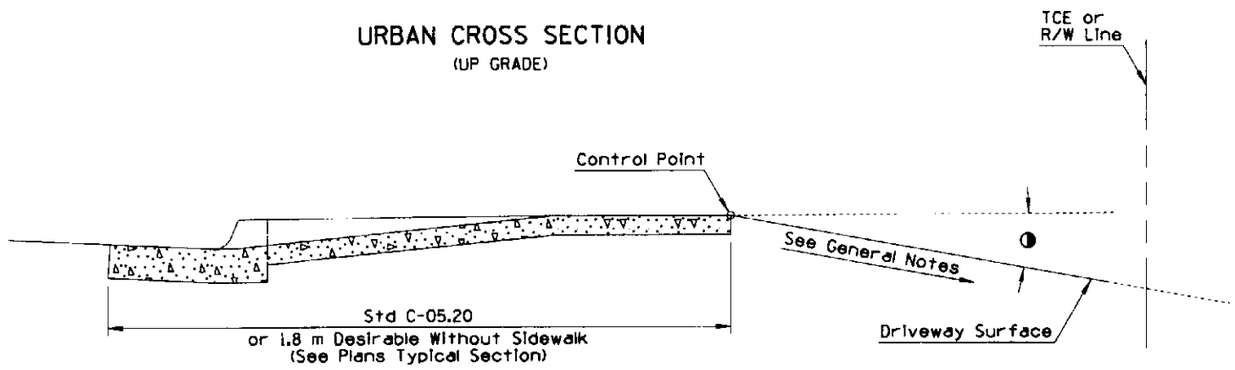

URBAN CROSS SECTION
(DOWN GRADE)

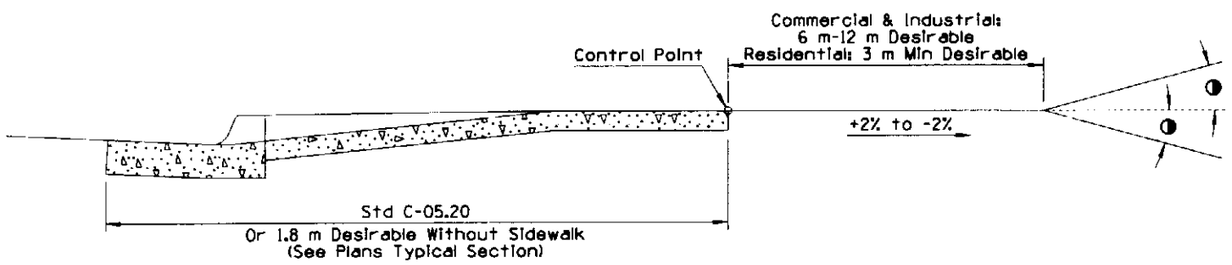

DESIRABLE URBAN CROSS SECTION

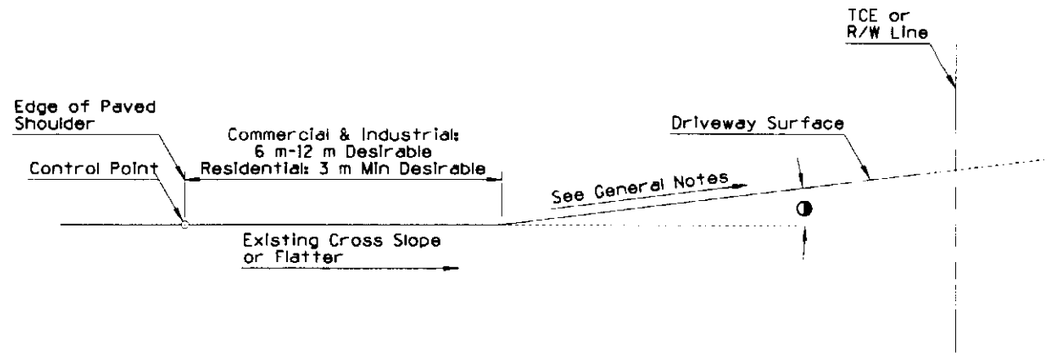

CONCRETE SIDEWALK
(UP GRADE)

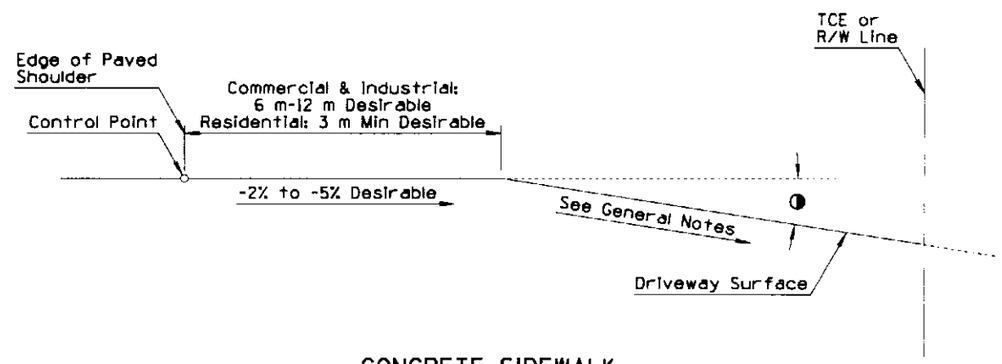

CONCRETE SIDEWALK
(DOWN GRADE)

DESIGN APPROVED	STATE OF ARIZONA DEPARTMENT OF TRANSPORTATION DIVISION OF HIGHWAYS STANDARD DRAWINGS	ISSUE 6/95
APPROVED FOR DISTRIBUTION	DRIVEWAY & TURNOUT LAYOUTS	DRAWING NO. C-06.10 Sheet 2 of 2

Metric

NO	DESCRIPTION OF REVISIONS	MADE BY	DATE
1			
2			
3			
4			

Metric

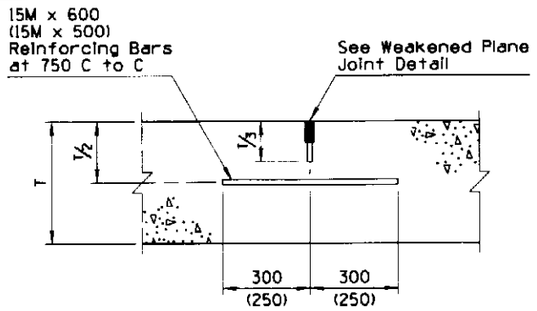

LONGITUDINAL WEAKENED PLANE JOINT
LWP Joint

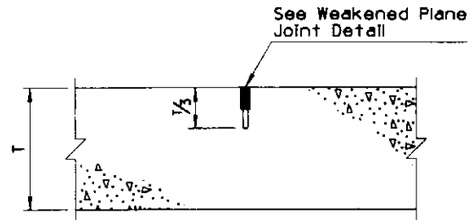

TRANSVERSE WEAKENED PLANE JOINT
TWP Joint
w/o Load Transfer Dowel Assemblies

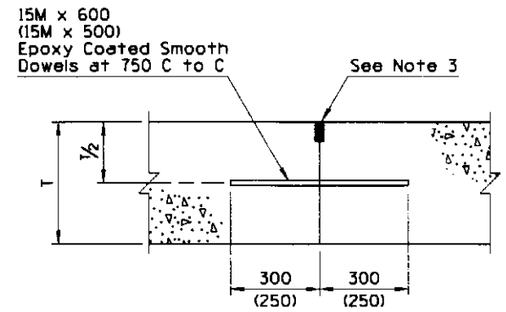

LONGITUDINAL CONSTRUCTION JOINT
LC Joint

GENERAL NOTES

1. When load transfer dowel assemblies are required, use dimensions shown in ( )'s. See Assembly Placement and Edge Clearance Detail, Std C-07.02.
2. In slip form type pavement construction, LWP joints shall be used. In fixed form construction either LWP or LC joints may be used.
3. Same as weakened plane joint detail, except initial saw cut will not be required.

JOINT ABBREVIATIONS

LWP	-	Longitudinal Weakened Plane Joint
TWP	-	Transverse Weakened Plane Joint
LC	-	Longitudinal Construction Joint
TC	-	Transverse Construction Joint
E, H	-	Expansion Joints
S	-	AC/PCC Pavement Edge Seal Joint
T	-	PCCP Thickness

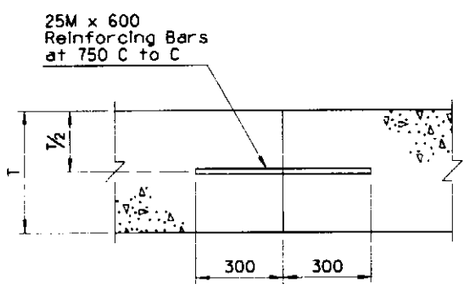

TRANSVERSE CONSTRUCTION JOINT
TC Joint
Skewed Joint

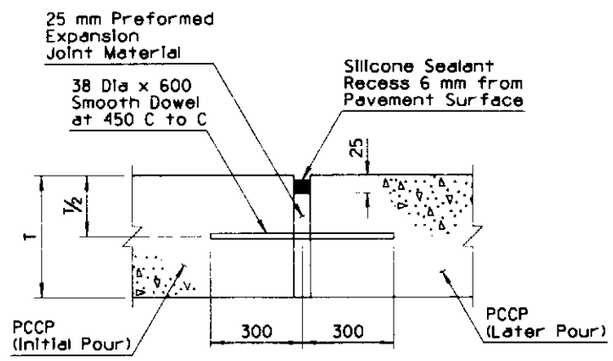

EXPANSION JOINT
E Joint

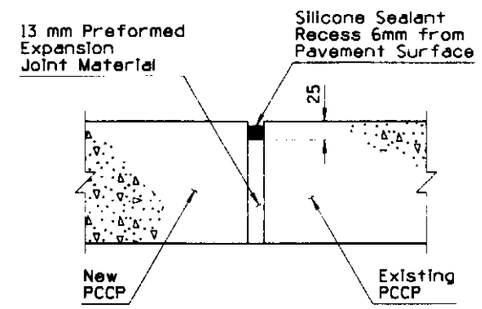

EXPANSION JOINT
H Joint

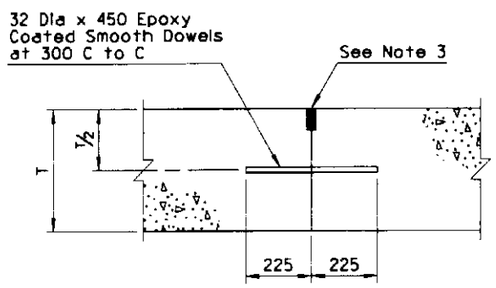

TRANSVERSE CONSTRUCTION JOINT
TC Joint
Non-Skewed Joint

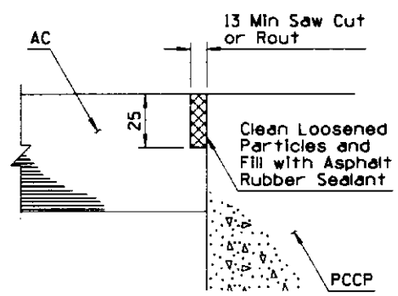

AC/PCCP EDGE SEAL JOINT
S Joint

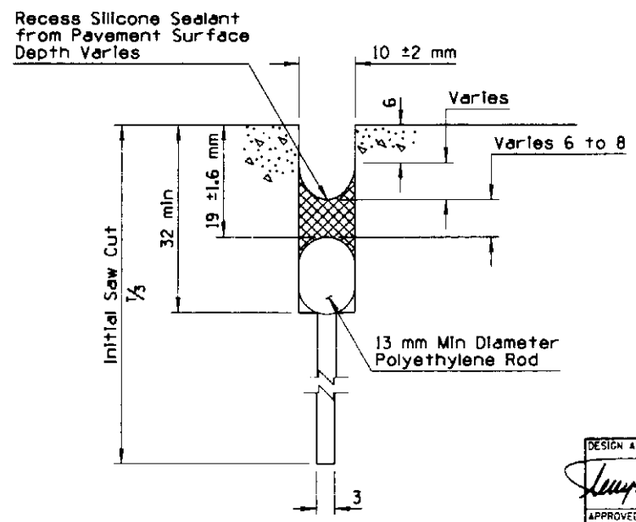

WEAKENED PLANE JOINT DETAIL

DESIGN APPROVED	STATE OF ARIZONA DEPARTMENT OF TRANSPORTATION DIVISION OF HIGHWAYS STANDARD DRAWINGS	ISSUE 6/95
APPROVED FOR DISTRIBUTION	PCCP JOINTS	DRAWING NO. C-07.01 Sheet 1 of 2

Metric

NO	DESCRIPTION OF REVISIONS	MADE BY	DATE

Metric

GENERAL NOTES

1. Joints are generally shown with pavement sloping toward the joint. Joints are similar with pavement sloping away from the joint.

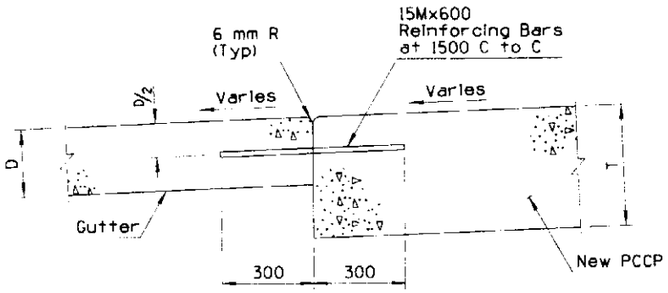

CURB & GUTTER JOINT
C Joint

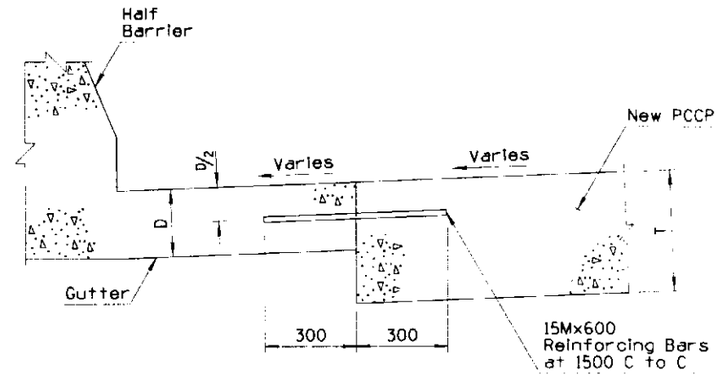

HALF BARRIER JOINT
B Joint

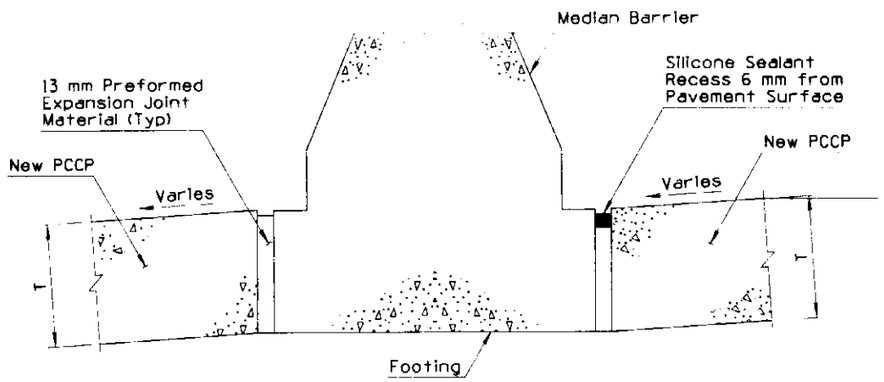

MEDIAN BARRIER JOINT
B Joint
PCCP On Both Sides of Barrier

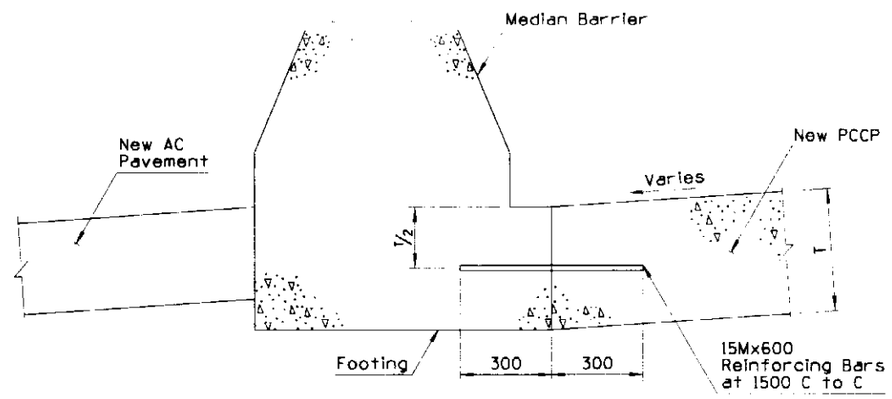

MEDIAN BARRIER JOINT
B Joint
AC Pavement On Back Side of Barrier

JOINT ABBREVIATIONS

C - Gutter Joint
T - PCCP Thickness
D - Gutter Thickness
B - Barrier Joint

DESIGN APPROVED	STATE OF ARIZONA DEPARTMENT OF TRANSPORTATION DIVISION OF HIGHWAYS STANDARD DRAWINGS	ISSUE 6/95
APPROVED FOR DISTRIBUTION	PCCP JOINTS	DRAWING NO. C-07.01 Sheet 2 of 2

Metric

NO.	DESCRIPTION OF REVISION	MADE BY	DATE

Metric

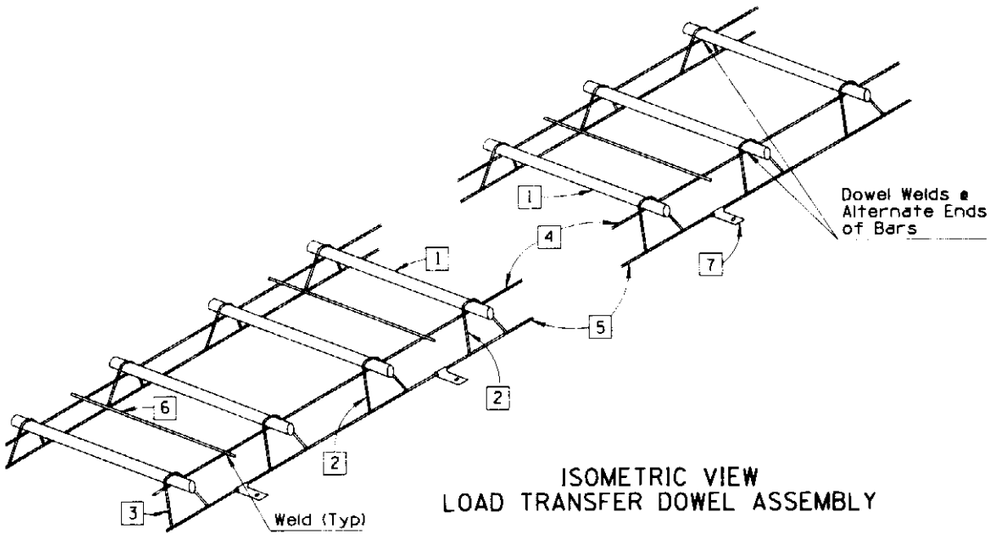

ISOMETRIC VIEW
LOAD TRANSFER DOWEL ASSEMBLY

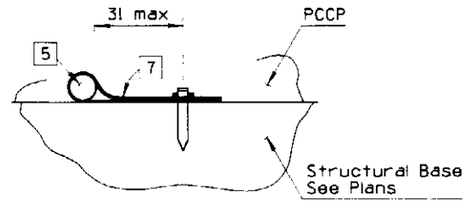

ANCHOR STRAP DETAIL

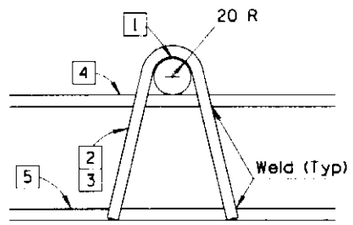

END AND INTERMEDIATE LEG DETAIL

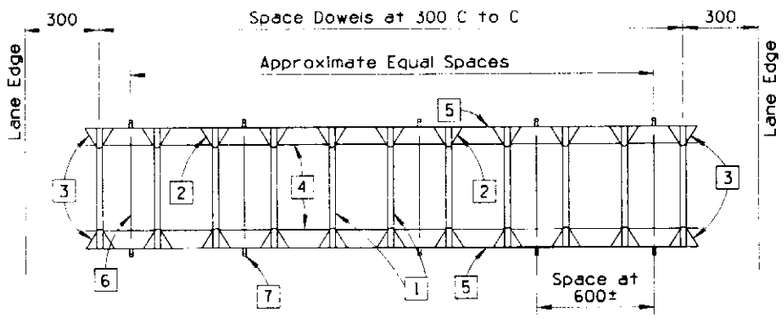

PLAN VIEW
LOAD TRANSFER DOWEL ASSEMBLY

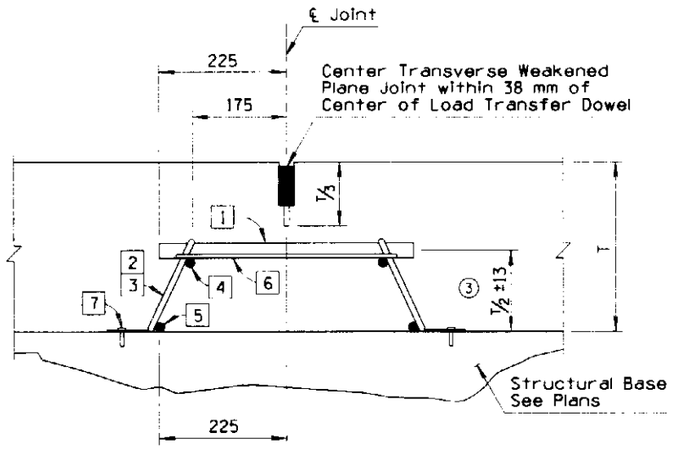

TRANSVERSE WEAKENED PLANE JOINT WITH
LOAD TRANSFER DOWEL ASSEMBLY

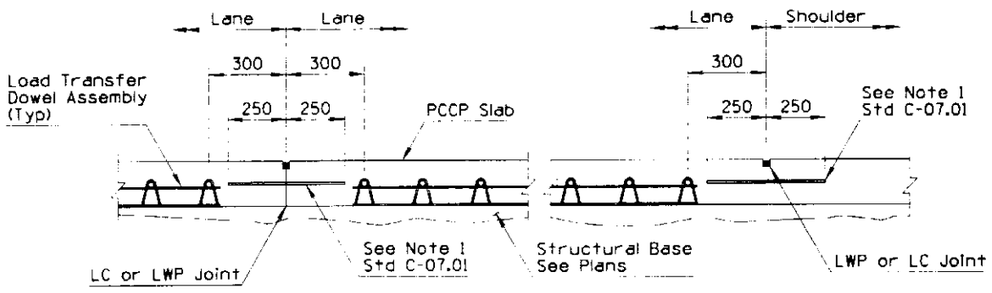

ASSEMBLY PLACEMENT AND EDGE CLEARANCE DETAIL

GENERAL NOTES

1. Load transfer dowel assemblies shall be used with non-skewed PCCP joints.
2. Load transfer dowel assemblies are to be placed at each transverse weakened plane joint on the traveled lanes as shown on the plans.
3. See Std C-07.01 thru C-07.05 for additional information.
4. See plans or Std C-07.03 thru C-07.05 for transverse joint spacing.
5. See plans for pavement thickness less than 300 or greater than 350.

Load transfer dowel assembly shall be assembled from the following materials.
(See Quantity Table)

1. Dowel bars - 38 dia x 450 plain round bars w/coating. See Special Provisions.
2. Intermediate legs - 7 mm thick or W-5.5 wire.
3. End legs - 7 mm thick or W-5.5 wire.
4. Upper space bar - 7 mm thick or W-5.5 wire x ◑. (See Dimension Table)
5. Lower space bar - 7 mm thick or W-5.5 wire x ◑. (See Dimension Table)
6. Tie bars - W-1.5 wire x 400.
7. Anchor straps - 25x75 steel strap, 2 mm thick. Place with 38 min steel nail for LCB, 100 min steel nail for ACB or AB, 3.5 mm dia ASTM A 227/A 227M Class I w/6 mm head or washer to be power driven.

QUANTITY TABLE

Item No.	Lane Width		
	3.6 m	4.2 m	4.8 m
1	11	13	15
2	18	22	26
3	4	4	4
4	2	2	2
5	2	2	2
6	5	6	7
7	10	12	14

DIMENSION TABLE

	Lane Width		
	3.6 m	4.2 m	4.8 m
◑	3.1 m	3.7 m	4.3 m

DESIGN APPROVED
Henry H. Otterness

APPROVED FOR DISTRIBUTION
Ronald Williams

STATE OF ARIZONA
DEPARTMENT OF TRANSPORTATION
DIVISION OF HIGHWAYS
STANDARD DRAWINGS

ISSUE 6/95

LOAD TRANSFER
DOWEL ASSEMBLY

DRAWING NO. C-07.02

Metric

NO	DESCRIPTION OF REVISIONS	MADE BY	DATE
1			
2			
3			
4			

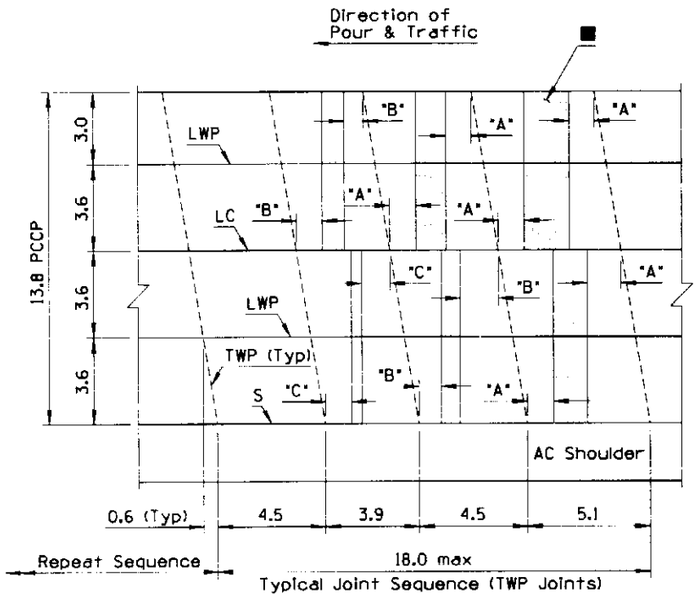

PLAN
13.8 PCCP

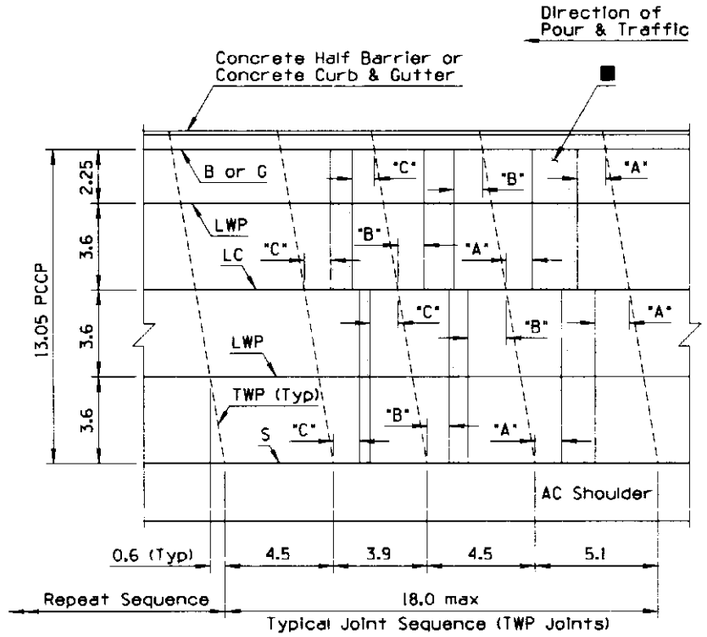

PLAN
13.05 PCCP

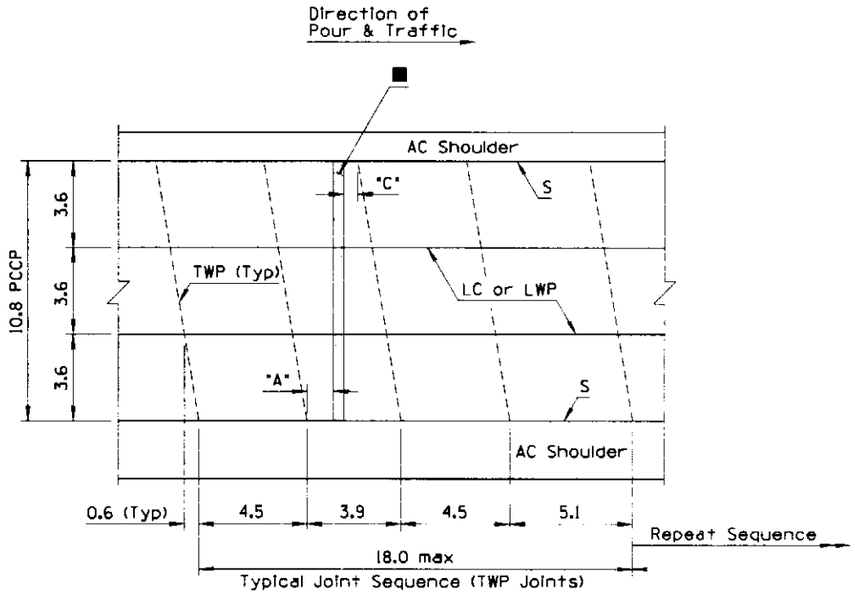

PLAN
10.8 PCCP

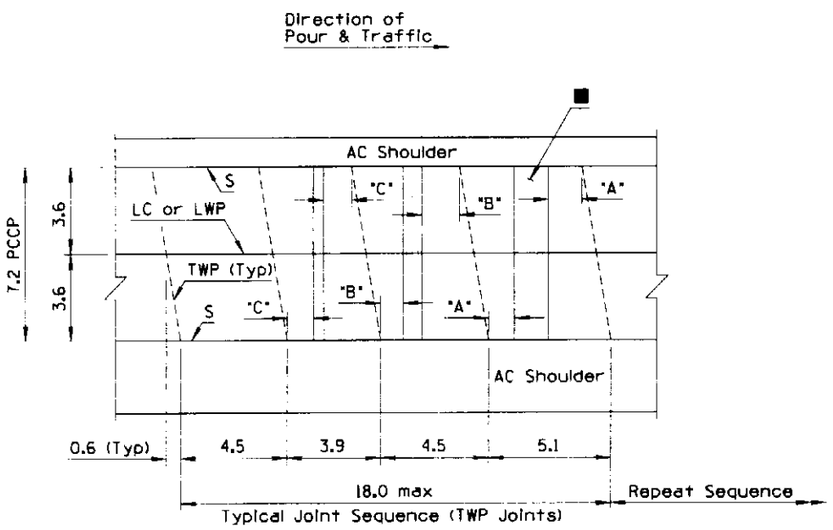

PLAN
7.2 PCCP

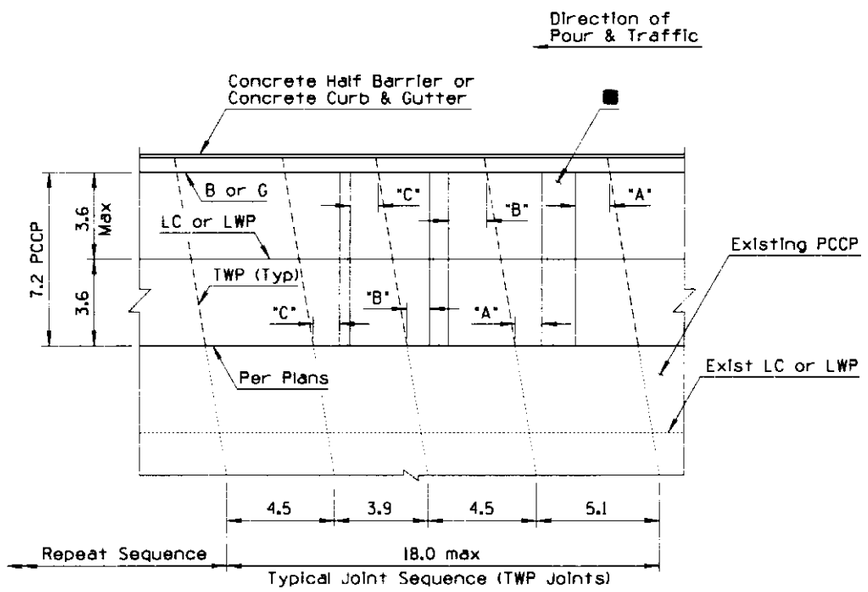

PLAN
7.2 PCCP
(Widening)

GENERAL NOTES

1. Skewed PCCP joints shall be used when load transfer dowel assemblies are not required.
2. "A" shall equal 1.2 minimum (typical).
   "B" shall equal 0.9 minimum (typical)
   "C" shall equal 0.6 minimum (typical)
3. See Std C-07.01 for PCCP joints and additional notes.
4. All transverse joints shall be in line with joints in adjacent slabs.
5. See Std C-05.10 for curb and gutter joint requirements.
6. At intersection of side roads or streets, joints shall be placed to give the intersection a symmetrical appearance while conforming to the cross section of the intersecting road or street.
7. The reinforcing bars in the LWP & LC joints shall be placed no greater than 0.375 m from the TC joint.

■ Transverse Construction Joint (TC) allowable limits (Typ).

All dimensions are in meters.

DESIGN APPROVED	STATE OF ARIZONA DEPARTMENT OF TRANSPORTATION DIVISION OF HIGHWAYS STANDARD DRAWINGS	ISSUE 6/95
APPROVED FOR DISTRIBUTION	MAINLINE PCCP JOINT LOCATIONS SKEWED JOINTS	DRAWING NO. C-07.03 Sheet 1 of 8

NO	DESCRIPTION OF REVISIONS	MADE BY	DATE

Metric

GENERAL NOTES

1. Skewed PCCP joints shall be used when load transfer dowel assemblies are not required.
2. "A" shall equal 1.2 minimum (typical).
   "B" shall equal 0.9 minimum (typical)
   "C" shall equal 0.6 minimum (typical)
3. See Std C-07.01 for PCCP joints and additional notes.
4. All transverse joints shall be in line with joints in adjacent slabs.
5. See Std C-05.10 for curb and gutter joint requirements.
6. At intersection of side roads or streets, joints shall be placed to give the intersection a symmetrical appearance while conforming to the cross section of the intersecting road or street.
7. The reinforcing bars in the LWP & LC joints shall be placed no greater than 0.375 m from the TC joint.

■ Transverse Construction Joint (TC) allowable limits (Typ).

All dimensions are in meters.

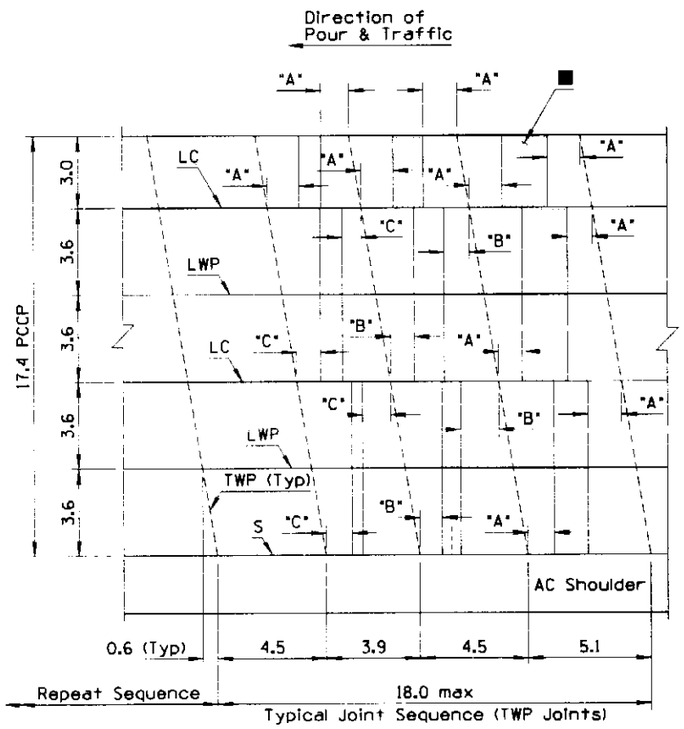

PLAN
17.4 PCCP

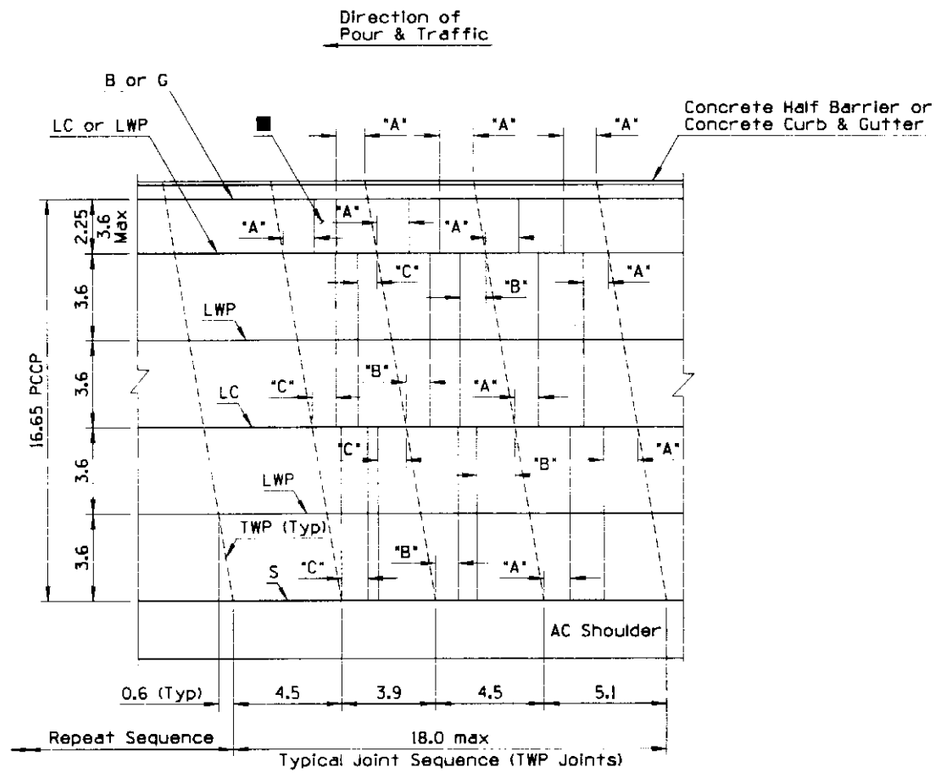

PLAN
16.65 PCCP

DESIGN APPROVED	STATE OF ARIZONA DEPARTMENT OF TRANSPORTATION DIVISION OF HIGHWAYS STANDARD DRAWINGS	ISSUE 6/95
APPROVED FOR DISTRIBUTION	MAINLINE PCCP JOINT LOCATIONS SKEWED JOINTS	DRAWING NO. C-07.03 Sheet 2 of 8

Metric

NO.	DESCRIPTION OF REVISIONS	MADE BY	DATE
1			
2			
3			
4			

Metric

GENERAL NOTES

1. Skewed PCCP joints shall be used when load transfer dowel assemblies are not required.
2. "A" shall equal 1.2 minimum (typical).
   "B" shall equal 0.9 minimum (typical)
   "C" shall equal 0.6 minimum (typical)
3. See Std C-07.01 for PCCP joints and additional notes.
4. All transverse joints shall be in line with joints in adjacent slabs.
5. See Std C-05.10 for curb and gutter joint requirements.
6. At intersection of side roads or streets, joints shall be placed to give the intersection a symmetrical appearance while conforming to the cross section of the intersecting road or street.
7. The reinforcing bars in the LWP & LC joints shall be placed no greater than 0.375 m from the TC joint.

■ Transverse Construction Joint (TC) allowable limits (Typ).

All dimensions are in meters.

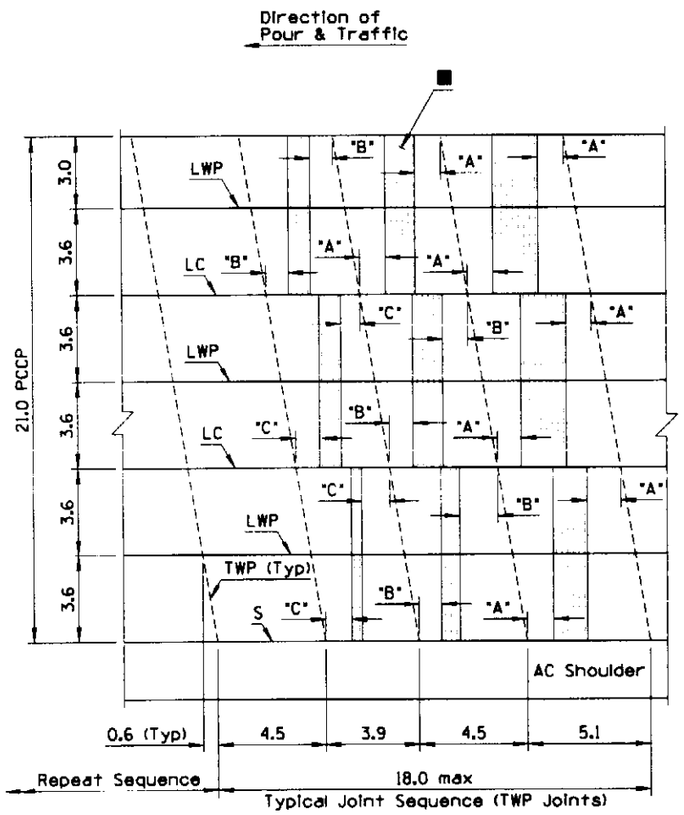

PLAN
21.0 PCCP

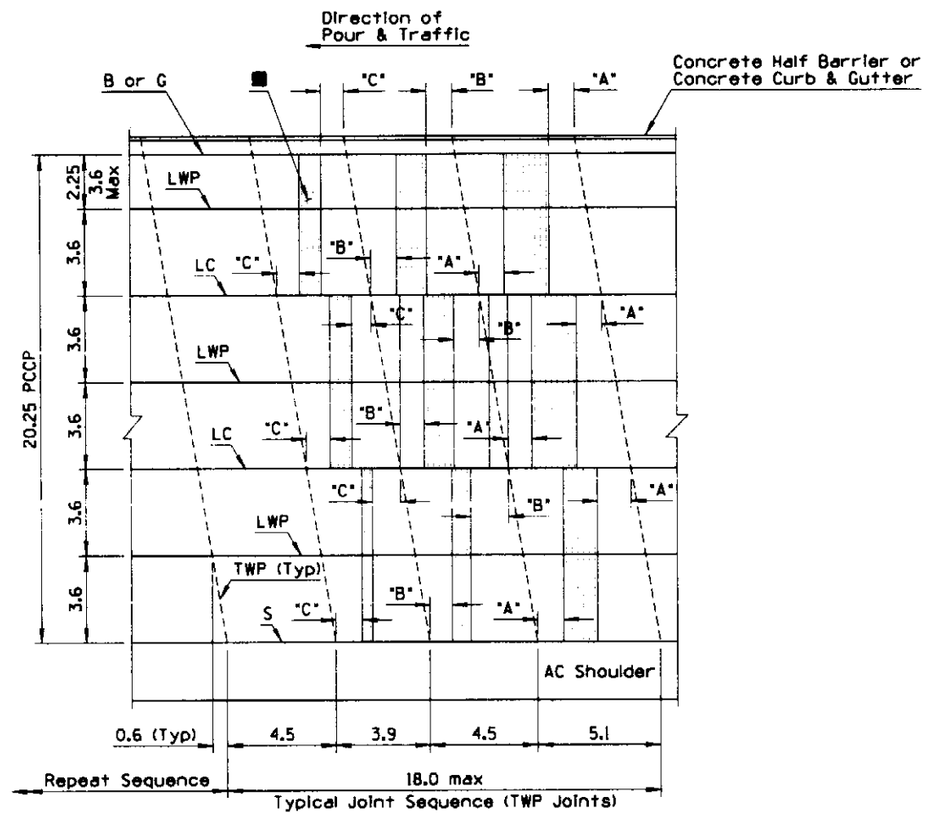

PLAN
20.25 PCCP

DESIGN APPROVED Terry H. Otterson	STATE OF ARIZONA DEPARTMENT OF TRANSPORTATION DIVISION OF HIGHWAYS STANDARD DRAWINGS	ISSUE 6/95
APPROVED FOR DISTRIBUTION Ronald A. Williams	MAINLINE PCCP JOINT LOCATIONS SKEWED JOINTS	DRAWING NO. C-07.03 Sheet 3 of 8

Metric

NO	DESCRIPTION OF REVISIONS	MADE BY	DATE

Metric

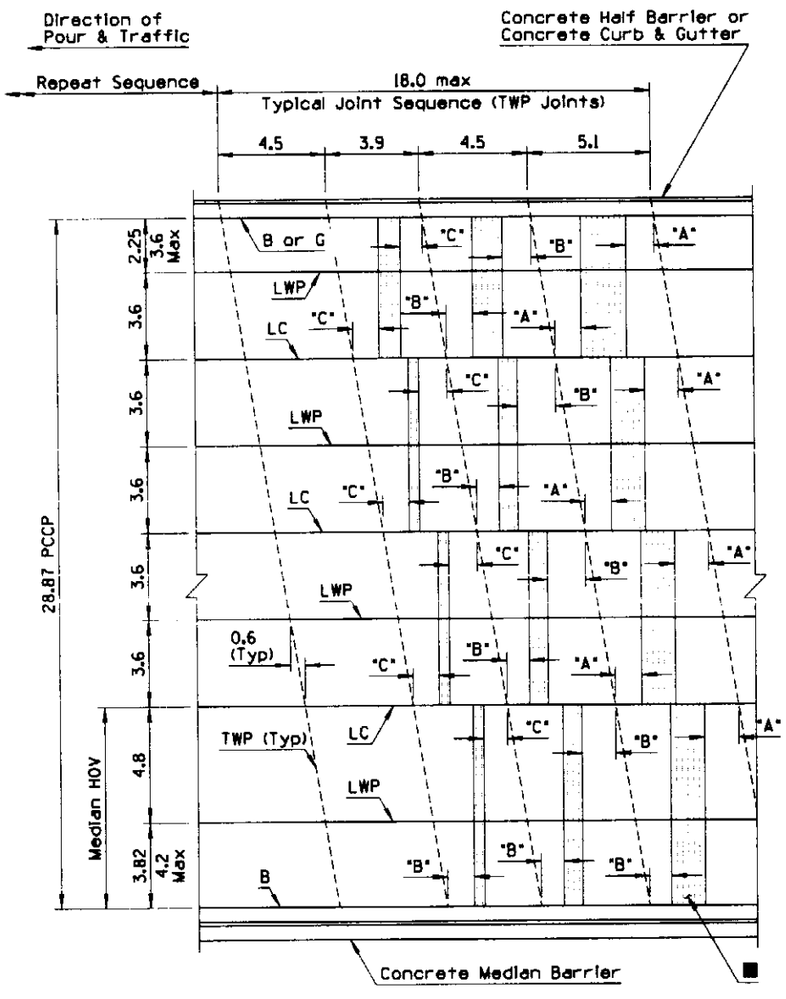

PLAN
28.87 PCCP

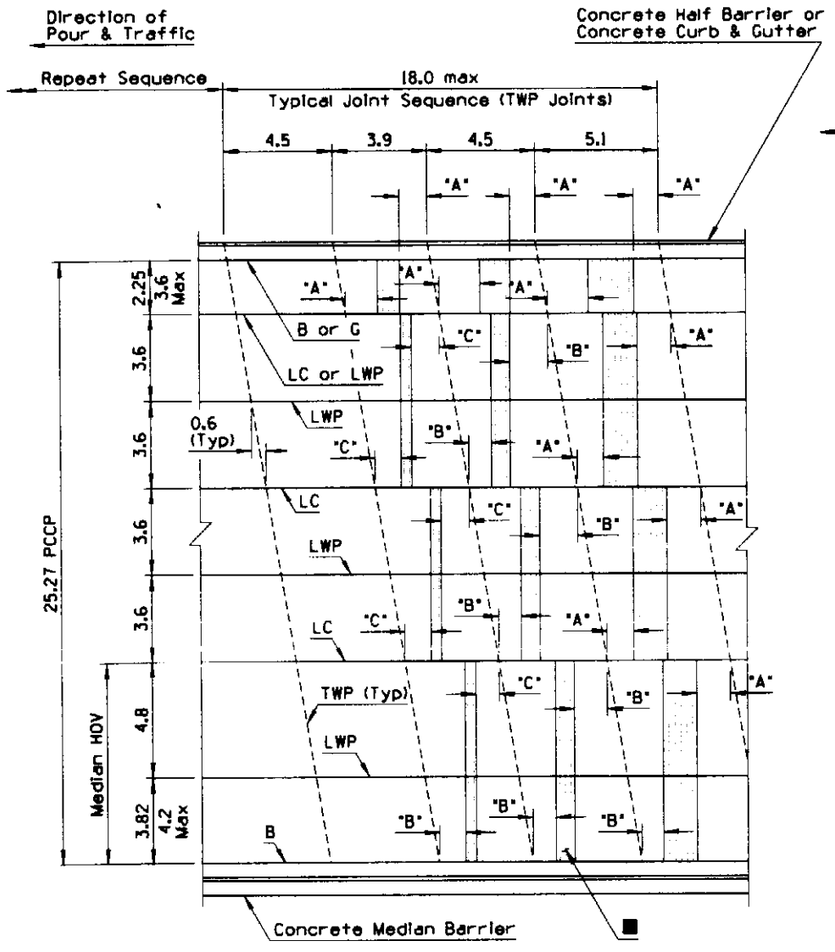

PLAN
25.27 PCCP

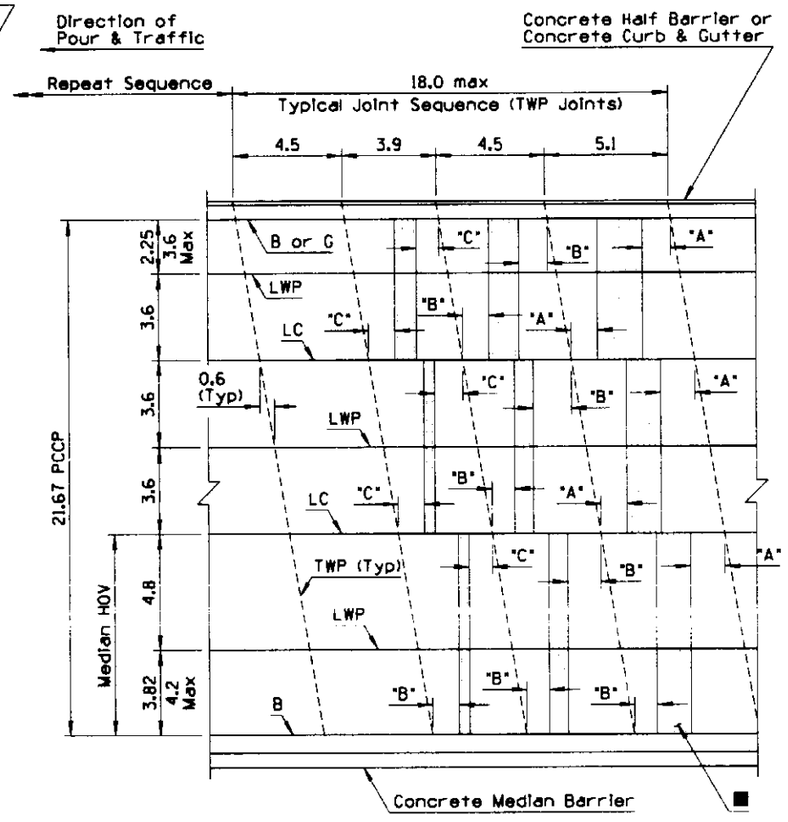

PLAN
21.67 PCCP

GENERAL NOTES

1. Skewed PCCP joints shall be used when load transfer dowel assemblies are not required.
2. "A" shall equal 1.2 minimum (typical).
   "B" shall equal 0.9 minimum (typical)
   "C" shall equal 0.6 minimum (typical)
3. See Std C-07.01 for PCCP joints and additional notes.
4. All transverse joints shall be in line with joints in adjacent slabs.
5. See Std C-05.10 for curb and gutter joint requirements.
6. At intersection of side roads or streets, joints shall be placed to give the intersection a symmetrical appearance while conforming to the cross section of the intersecting road or street.
7. The reinforcing bars in the LWP & LC joints shall be placed no greater than 0.375 m from the TC joint.

■ Transverse Construction Joint (TC) allowable limits (Typ).

All dimensions are in meters.

DESIGN APPROVED	STATE OF ARIZONA DEPARTMENT OF TRANSPORTATION DIVISION OF HIGHWAYS STANDARD DRAWINGS	ISSUE 6/95
APPROVED FOR DISTRIBUTION	MAINLINE PCCP JOINT LOCATIONS SKEWED JOINTS	DRAWING NO. C-07.03 Sheet 4 of 8

Metric

NO	DESCRIPTION OF REVISIONS	MADE BY	DATE
1			
2			
3			
4			

Metric

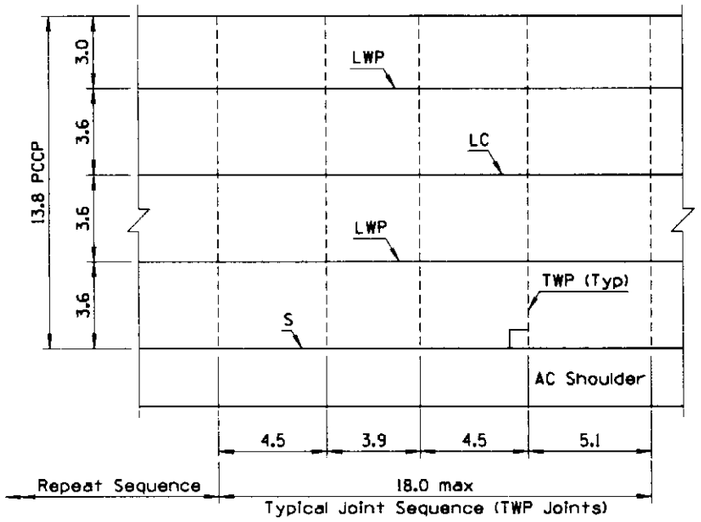

PLAN
13.8 PCCP

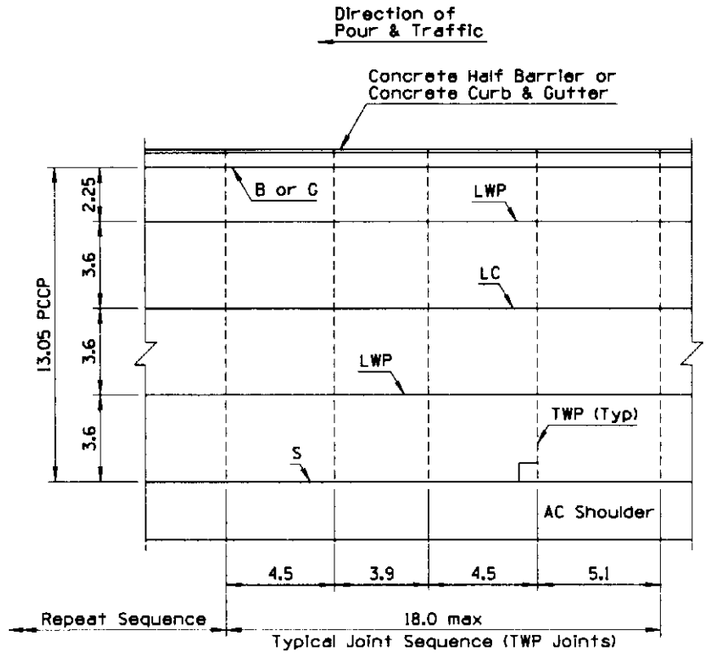

PLAN
13.05 PCCP

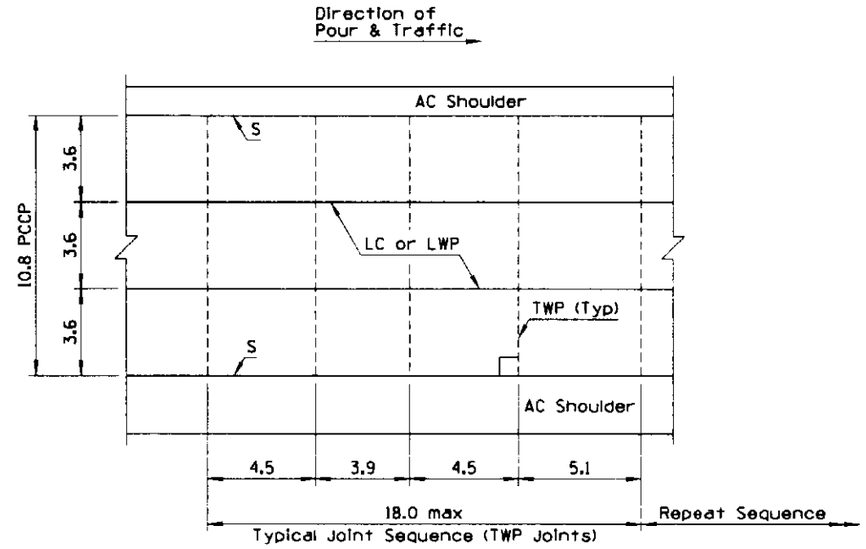

PLAN
10.8 PCCP

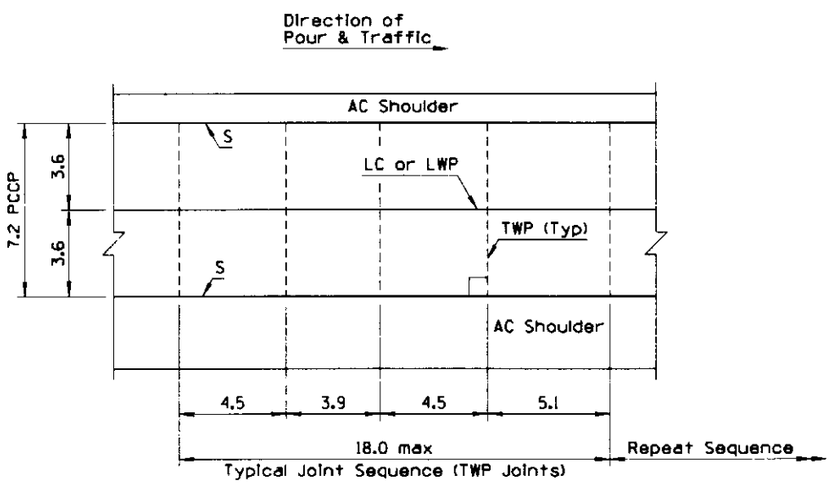

PLAN
7.2 PCCP

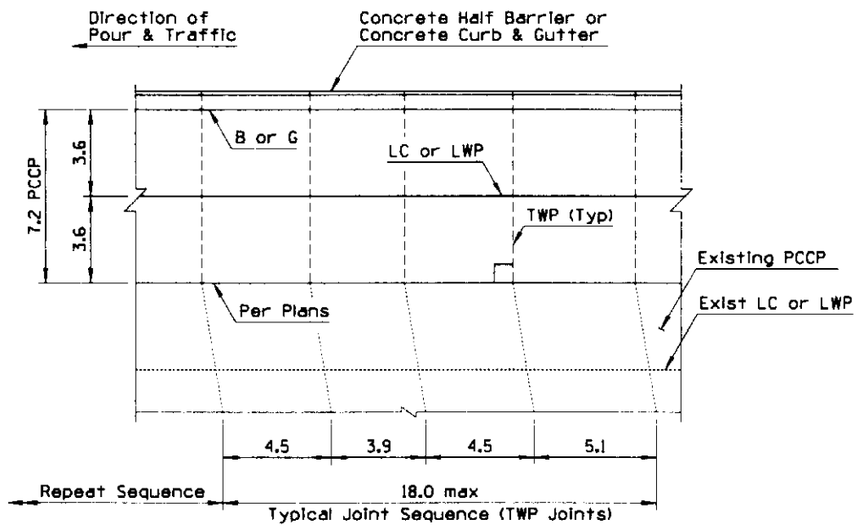

PLAN
7.2 PCCP
(Widening)

GENERAL NOTES

1. Non-skewed PCCP joints shall be used with load transfer dowel assemblies.
2. See Std C-07.01 for PCCP joints and additional notes.
3. All transverse joints shall be in line with joints in adjacent slabs and are perpendicular (90°) to the longitudinal joints.
4. At intersection of side roads or streets, joints shall be placed to give the intersection a symmetrical appearance while conforming to the cross section of the intersecting road or street.
5. See Std C-05.10 for curb and gutter joint requirements.
6. The reinforcing bars in the LWP & LC joints shall be placed no greater than 0.375 m from the TC joint.
7. Transverse weakened plane joint shall be constructed at least 1.8 m from a transverse construction joint.

All dimensions are in meters.

DESIGN APPROVED	STATE OF ARIZONA DEPARTMENT OF TRANSPORTATION DIVISION OF HIGHWAYS STANDARD DRAWINGS	ISSUE 6/95
APPROVED FOR DISTRIBUTION	MAINLINE PCCP JOINT LOCATIONS NON-SKEWED JOINTS	DRAWING NO. C-07.03 Sheet 5 of 8

Metric

R	DESCRIPTION OF REVISIONS	MADE BY	DATE
D			
C			
B			
A			

Metric

GENERAL NOTES

1. Non-skewed PCCP joints shall be used with load transfer dowel assemblies.
2. See Std C-07.01 for PCCP joints and additional notes.
3. All transverse joints shall be in line with joints in adjacent slabs and are perpendicular (90°) to the longitudinal joints.
4. At intersection of side roads or streets, joints shall be placed to give the intersection a symmetrical appearance while conforming to the cross section of the intersecting road or street.
5. See Std C-05.10 for curb and gutter joint requirements.
6. The reinforcing bars in the LWP & LC joints shall be placed no greater than 0.375 m from the TC joint.
7. Transverse weakened plane joint shall be constructed at least 1.8 m from a transverse construction joint.

All dimensions are in meters.

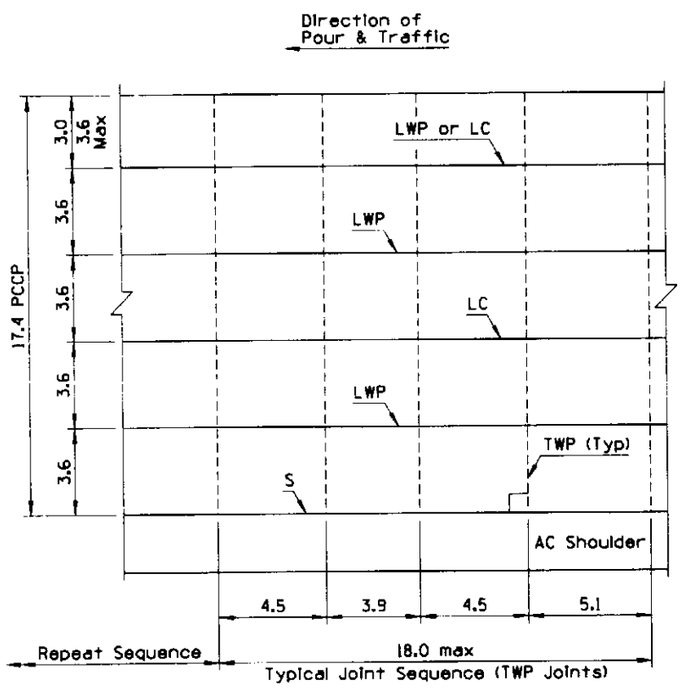

PLAN
17.4 PCCP

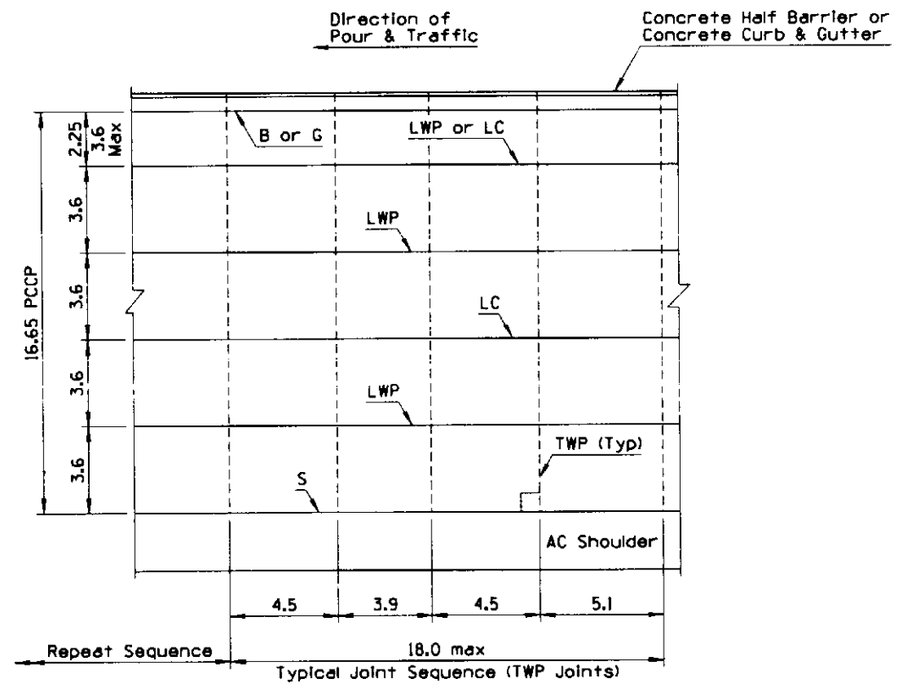

PLAN
16.65 PCCP

DESIGN APPROVED	STATE OF ARIZONA DEPARTMENT OF TRANSPORTATION DIVISION OF HIGHWAYS STANDARD DRAWINGS	ISSUE 6/95
APPROVED FOR DISTRIBUTION	MAINLINE PCCP JOINT LOCATIONS NON-SKEWED JOINTS	DRAWING NO. C-07.03 Sheet 6 of 8

Metric

NO	DESCRIPTION OF REVISIONS	MADE BY	DATE
1			
2			
3			

Metric

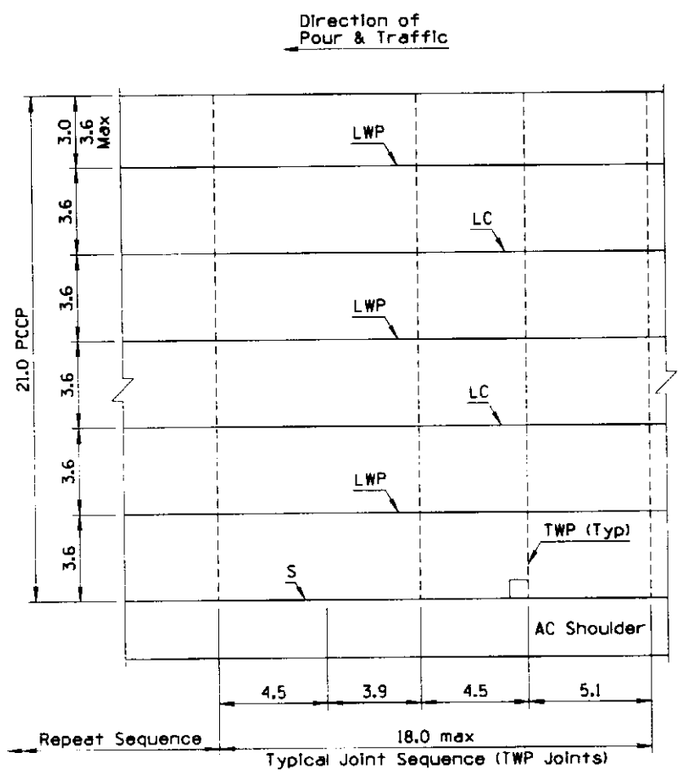

PLAN
21.0 PCCP

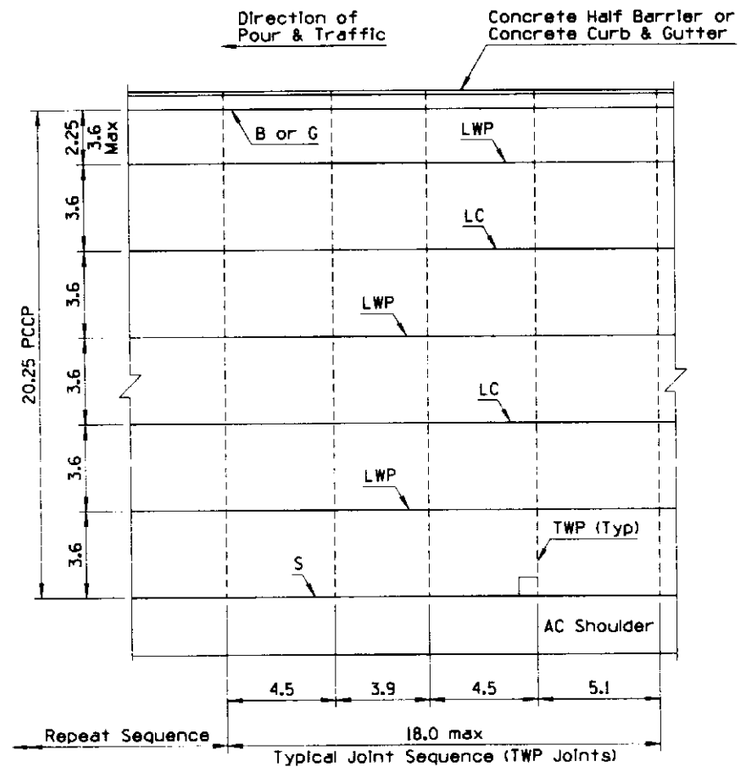

PLAN
20.25 PCCP

GENERAL NOTES

1. Non-skewed PCCP joints shall be used with load transfer dowel assemblies.
2. See Std C-07.01 for PCCP joints and additional notes.
3. All transverse joints shall be in line with joints in adjacent slabs and are perpendicular (90°) to the longitudinal joints.
4. At intersection of side roads or streets, joints shall be placed to give the intersection a symmetrical appearance while conforming to the cross section of the intersecting road or street.
5. See Std C-05.10 for curb and gutter joint requirements.
6. The reinforcing bars in the LWP & LC joints shall be placed no greater than 0.375 m from the TC joint.
7. Transverse weakened plane joint shall be constructed at least 1.8 m from a transverse construction joint.

All dimensions are in meters.

DESIGN APPROVED	STATE OF ARIZONA DEPARTMENT OF TRANSPORTATION DIVISION OF HIGHWAYS STANDARD DRAWINGS	ISSUE 6/95
APPROVED FOR DISTRIBUTION	MAINLINE PCCP JOINT LOCATIONS NON-SKEWED JOINTS	DRAWING NO. C-07.03 Sheet 7 of 8

Metric

NO.	DESCRIPTION OF REVISIONS	MADE BY	DATE

Metric

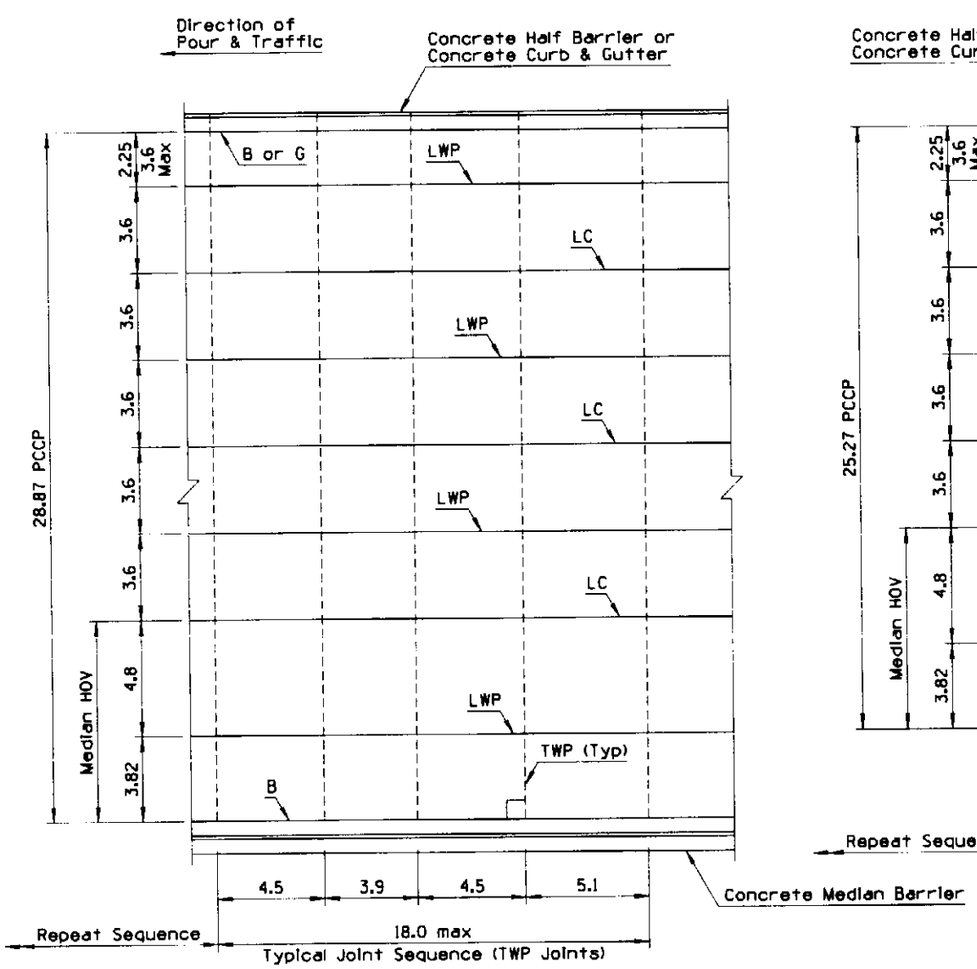

PLAN
28.87 PCCP

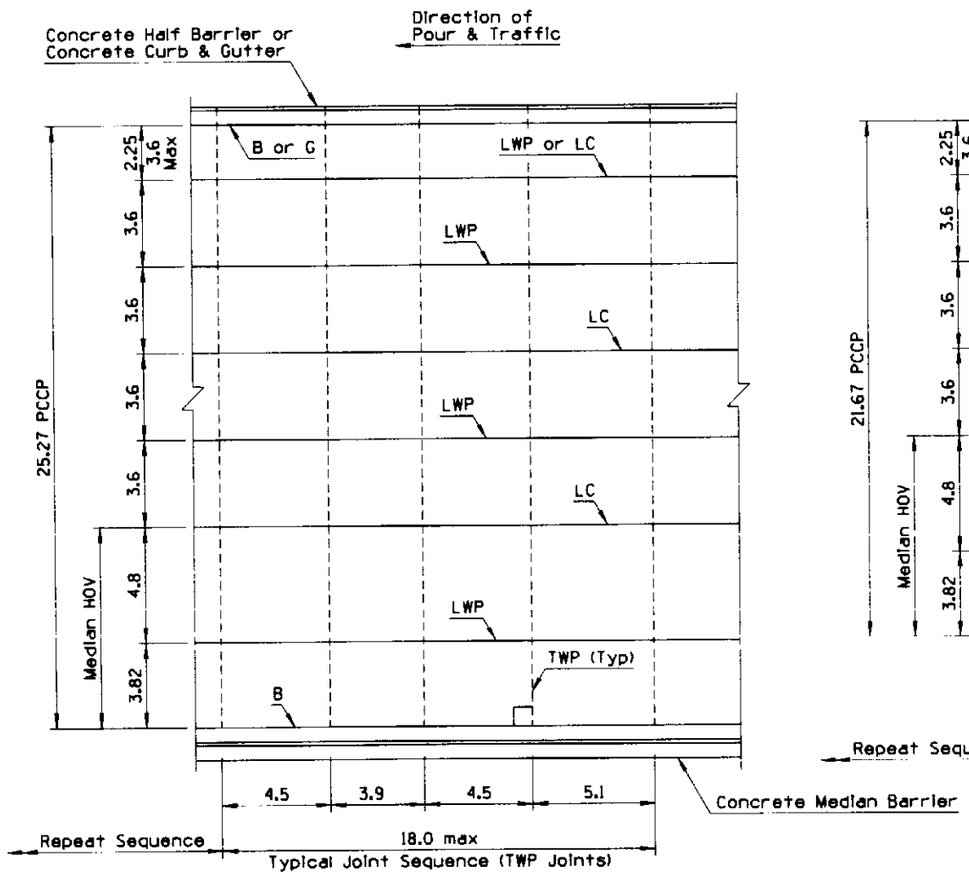

PLAN
25.27 PCCP

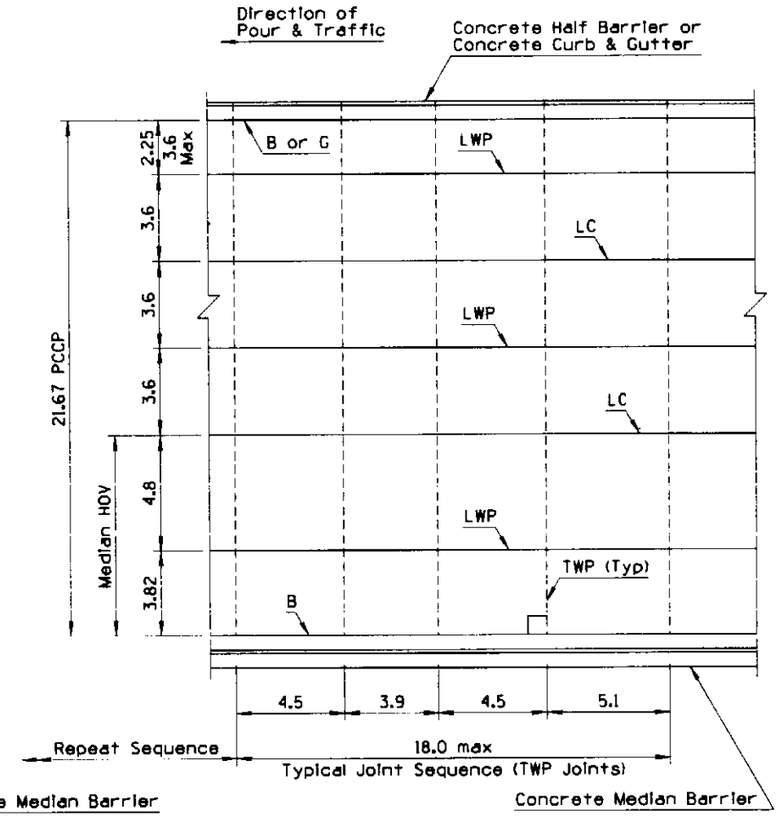

PLAN
21.67 PCCP

GENERAL NOTES

1. Non-skewed PCCP joints shall be used with load transfer dowel assemblies.
2. See Std C-07.01 for PCCP joints and additional notes.
3. All transverse joints shall be in line with joints in adjacent slabs and are perpendicular (90°) to the longitudinal joints.
4. At intersection of side roads or streets, joints shall be placed to give the intersection a symmetrical appearance while conforming to the cross section of the intersecting road or street.
5. See Std C-05.10 for curb and gutter joint requirements.
6. The reinforcing bars in the LWP & LC joints shall be placed no greater than 0.375 m from the TC joint.
7. Transverse weakened plane joint shall be constructed at least 1.8 m from a transverse construction joint.

All dimensions are in meters.

DESIGN APPROVED	STATE OF ARIZONA DEPARTMENT OF TRANSPORTATION DIVISION OF HIGHWAYS STANDARD DRAWINGS	ISSUE 6/95
APPROVED FOR DISTRIBUTION	MAINLINE PCCP JOINT LOCATIONS NON-SKEWED JOINTS	DRAWING NO. C-07.03 Sheet 8 of 8

Metric

NO	DESCRIPTION OF REVISIONS	MADE BY	DATE
1			
2			
3			
4			

Metric

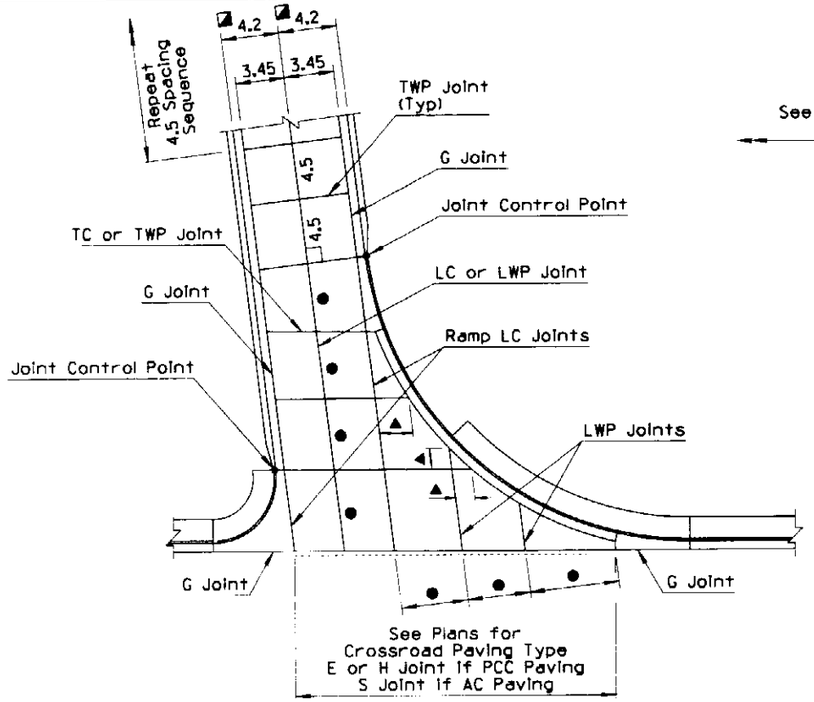

RAMP TERMINAL AT CROSSROAD

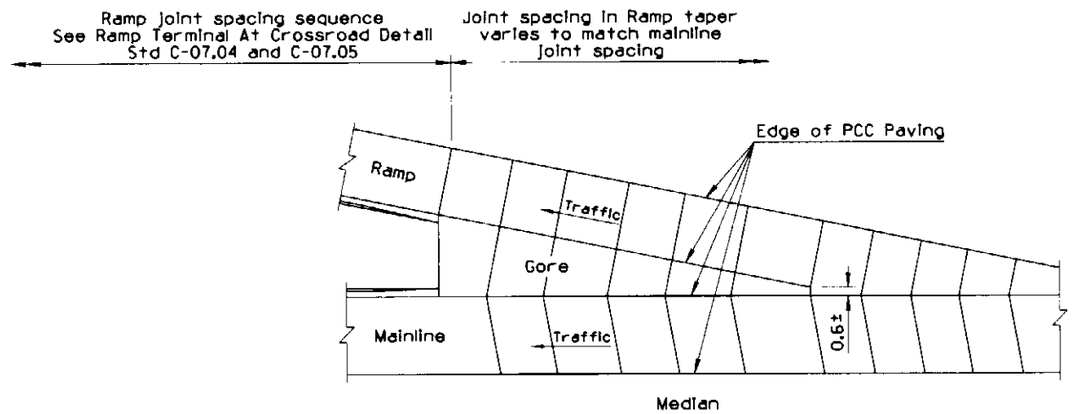

Exit Ramp Shown
Entrance Ramp Similar

TYPICAL TRANSVERSE WEAKENED PLANE
JOINT LAYOUT AT GORE AREAS

GENERAL NOTES

1. Dimensions with a tolerance may be adjusted to align to the nearest transverse weakened plane construction joint as directed.
2. See Std C-07.01 for joint information.
3. See plans for ramp dimensions.
4. See Std C-07.05 for Sections A-A and B-B.
5. The ratio of transverse to longitudinal joint spacing shall be greater than 2:3 but not more than 3:2.
6. Ramp transverse joints shall be perpendicular (90°) to the ramp longitudinal joints, except as shown at the ramp terminal.

▲ 1.8 Minimum

● Varies - 5.4 ~~Maximum~~ Maximum
3.3 Minimum

◨ Transition, See Std C-05.12

◩ Without Curb & Gutter

◑ 3.6 Face of Curb to Face of Curb

[1] Mainline Structure Section, See Plans

[2] Ramp Structure Section, See Plans

[3] Gore Structure Section, See Std C-08.20

All dimensions are in meters, unless otherwise shown.

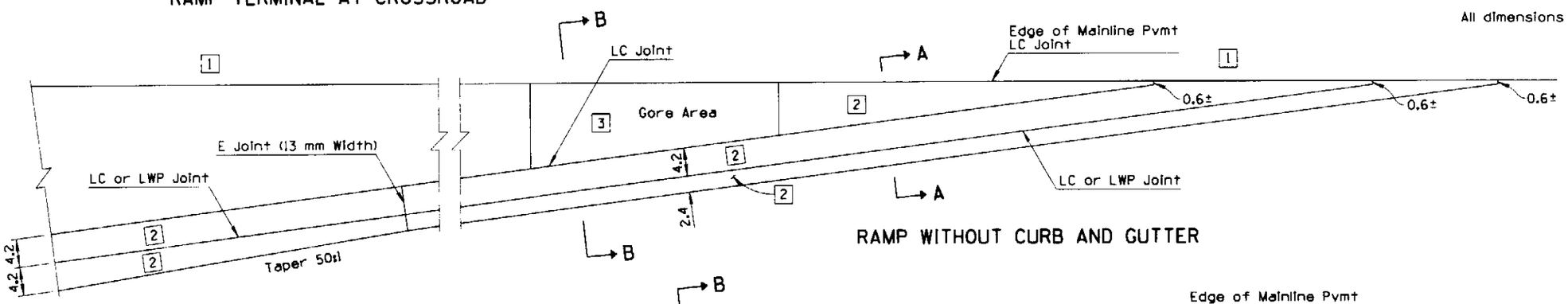

RAMP WITHOUT CURB AND GUTTER

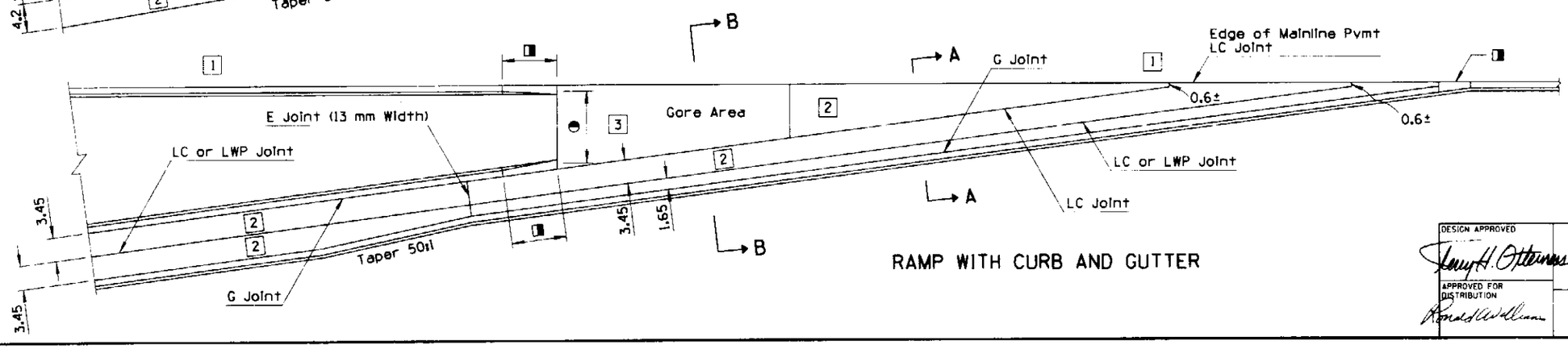

RAMP WITH CURB AND GUTTER

DESIGN APPROVED APPROVED FOR DISTRIBUTION	STATE OF ARIZONA DEPARTMENT OF TRANSPORTATION DIVISION OF HIGHWAYS STANDARD DRAWINGS	ISSUE 6/95
	ENTRANCE RAMP PCCP JOINTS	DRAWING NO. C-07.04

Metric

NO	DESCRIPTION OF REVISIONS	MADE BY	DATE
1			
2			
3			

Metric

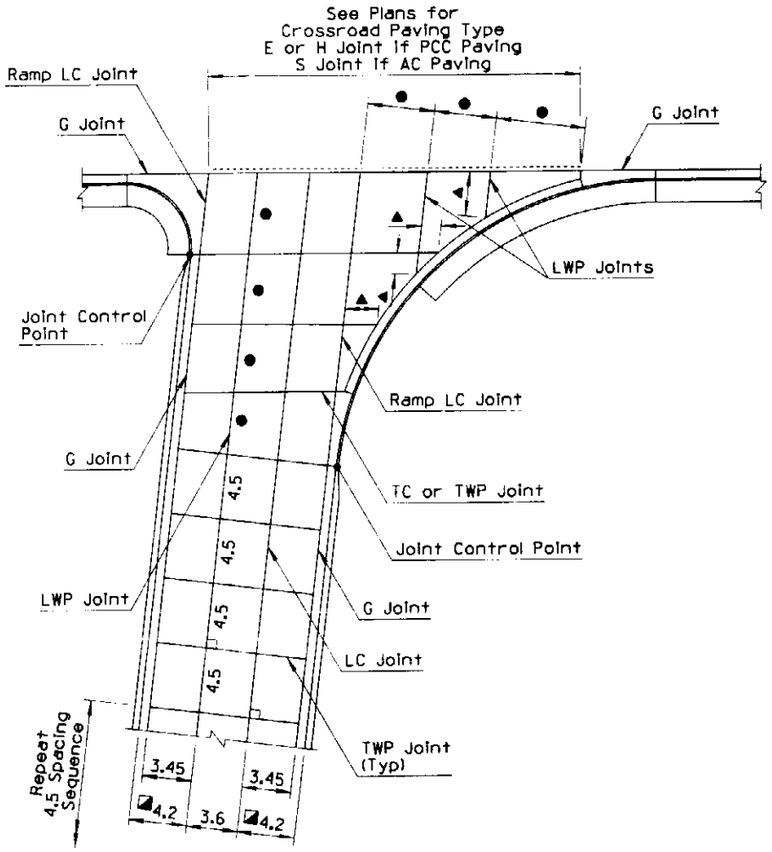

RAMP TERMINAL AT CROSSROAD

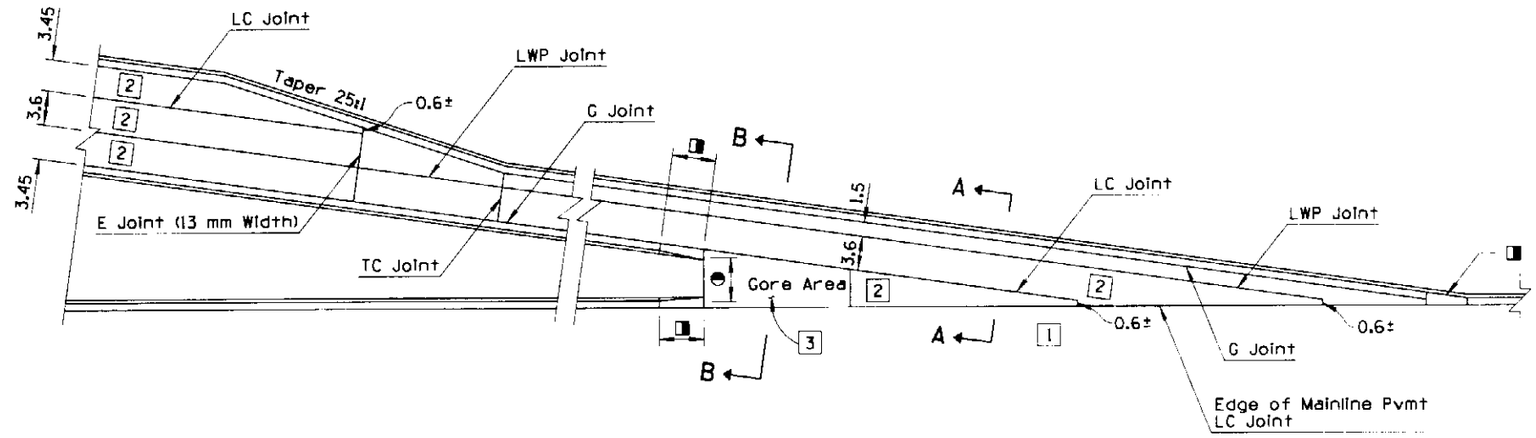

RAMP WITH CURB AND GUTTER

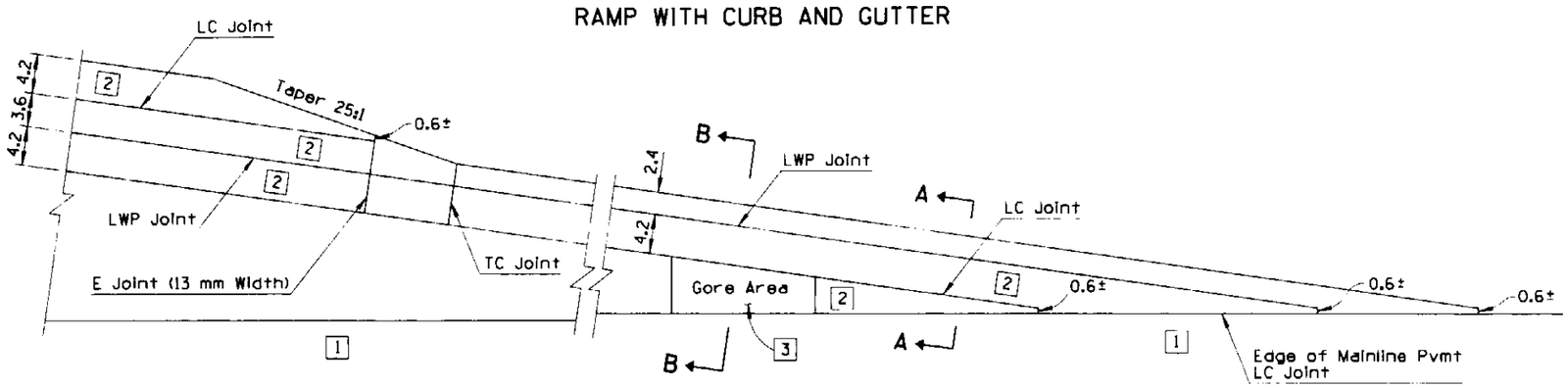

RAMP WITHOUT CURB AND GUTTER

GENERAL NOTES

1. See Std C-07.04 for General Notes and Transverse Joint Layout at Gore Areas.

◪ Without Curb & Gutter

▲ 1.8 Minimum

● Varies - 5.4 ~~Minimum~~ Maximum
3.3 Minimum

◑ Face of Curb to Face of Curb

◨ Transition, See Std C-05.12

[1] Mainline Structure Section, See Plans

[2] Ramp Structure Section, See Plans

[3] Gore Structure Section, See Std C-08.20

All dimensions are in meters, unless othwise shown.

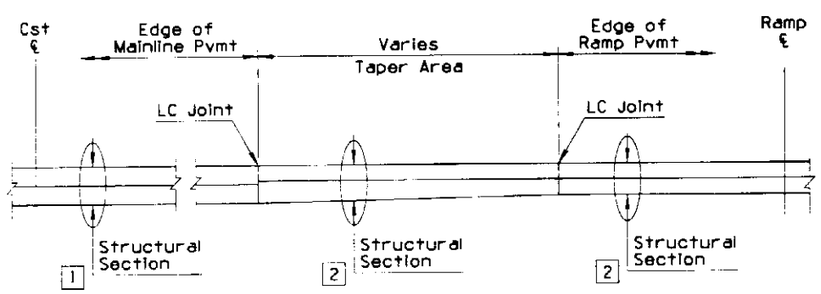

SECTION A-A
RAMP TAPER

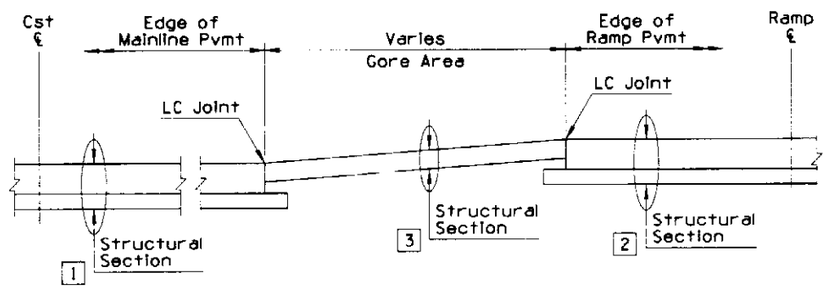

SECTION B-B
GORE AREA

DESIGN APPROVED	STATE OF ARIZONA DEPARTMENT OF TRANSPORTATION DIVISION OF HIGHWAYS STANDARD DRAWINGS	ISSUE 6/95
APPROVED FOR DISTRIBUTION	EXIT RAMP PCCP JOINTS	DRAWING NO. C-07.05

Metric

NO.	DESCRIPTION OF REVISIONS	MADE BY	DATE
1			
2			
3			
4			

Metric

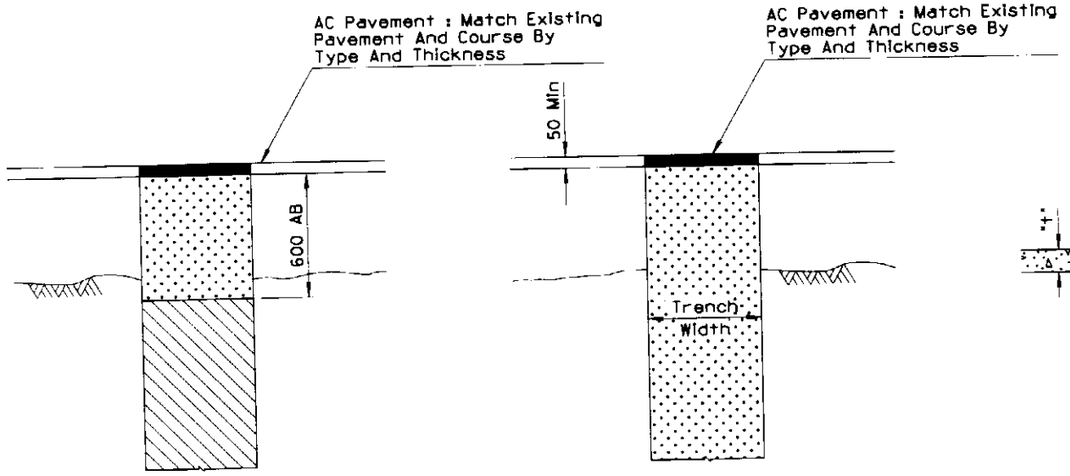

TYPE A

TYPE B

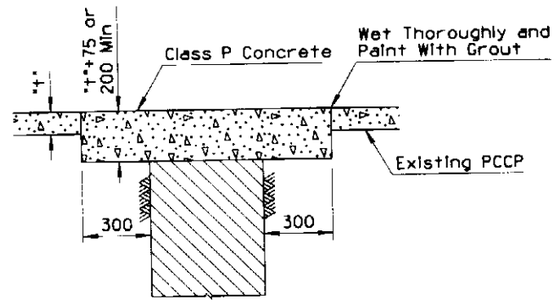

TYPE C

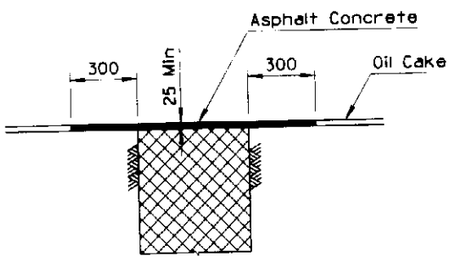

TYPE D

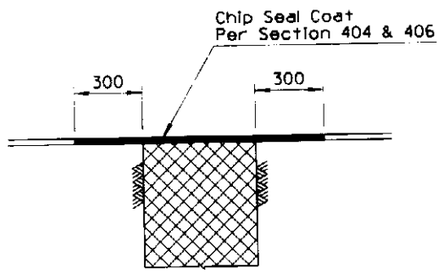

TYPE E

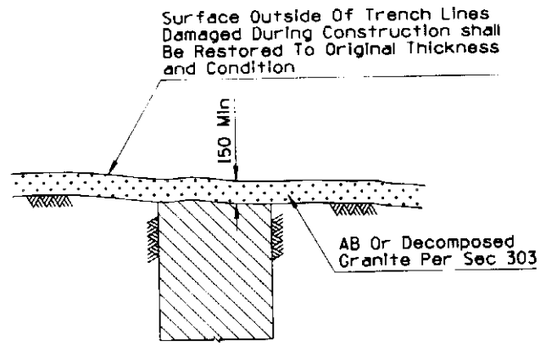

TYPE F

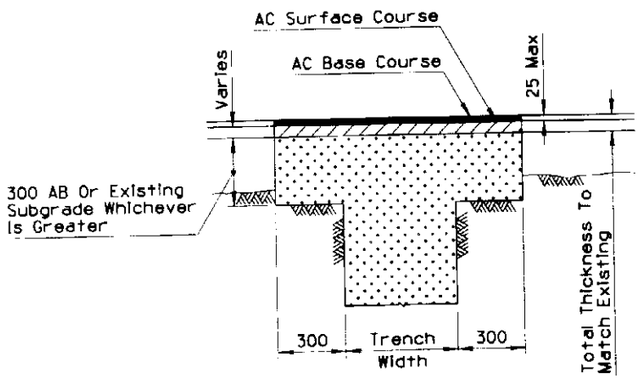

TYPE G

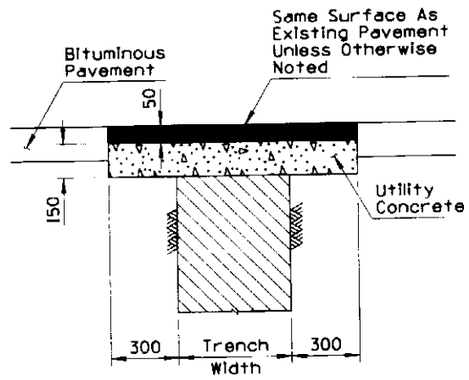

TYPE H

GENERAL NOTES

1. Bedding per Section 501 of the Standard Specifications.
2. Asphalt concrete shall be in accordance with the requirements of the Standard Specifications.
3. 300 mm lip is required on the sides of trenches that are not parallel at the center line of the street.
4. Types D & E require 225 mm of AB at top of trench when there is an existing base.
5. See Standard Drawing C-13.15 for Typical pipe installation.

LEGEND

Compacted Backfill Density Per Section 501

AB, Granular Backfill or Native Backfill Per Section 302-2 and 501

AB Per Section 303-2 and 501

DESIGN APPROVED Terry H. Otterson	STATE OF ARIZONA DEPARTMENT OF TRANSPORTATION DIVISION OF HIGHWAYS STANDARD DRAWINGS	ISSUE 6/95
APPROVED FOR DISTRIBUTION Donald A. Williams	TRENCH BACKFILL AND PAVEMENT REPLACEMENT	DRAWING NO. C-07.06

Metric

NO	DESCRIPTION OF REVISIONS	MADE BY	DATE
1			
2			
3			
4			

Metric

GENERAL NOTES

1. See Std C-07.01 for joint information.
2. See plans for crossroad dimensions.
3. See Std C-07.04 and C-07.05 for ramp joints.
4. The ratio of transverse to longitudinal joint spacing shall be greater than 2:3 but not more than 3:2.
5. Transverse joints shall be perpendicular (90°) to the longitudinal joints, except as shown at the ramp terminal.

▲ 1.8 Minimum

● Varies - 5.4 Maximum
2.4 Minimum

■ Varies - 3.6 m when adjacent gutter widths are 600 mm or less.
- 4.5 m when adjacent gutter widths are greater than 600 mm.

All dimensions are in meters.

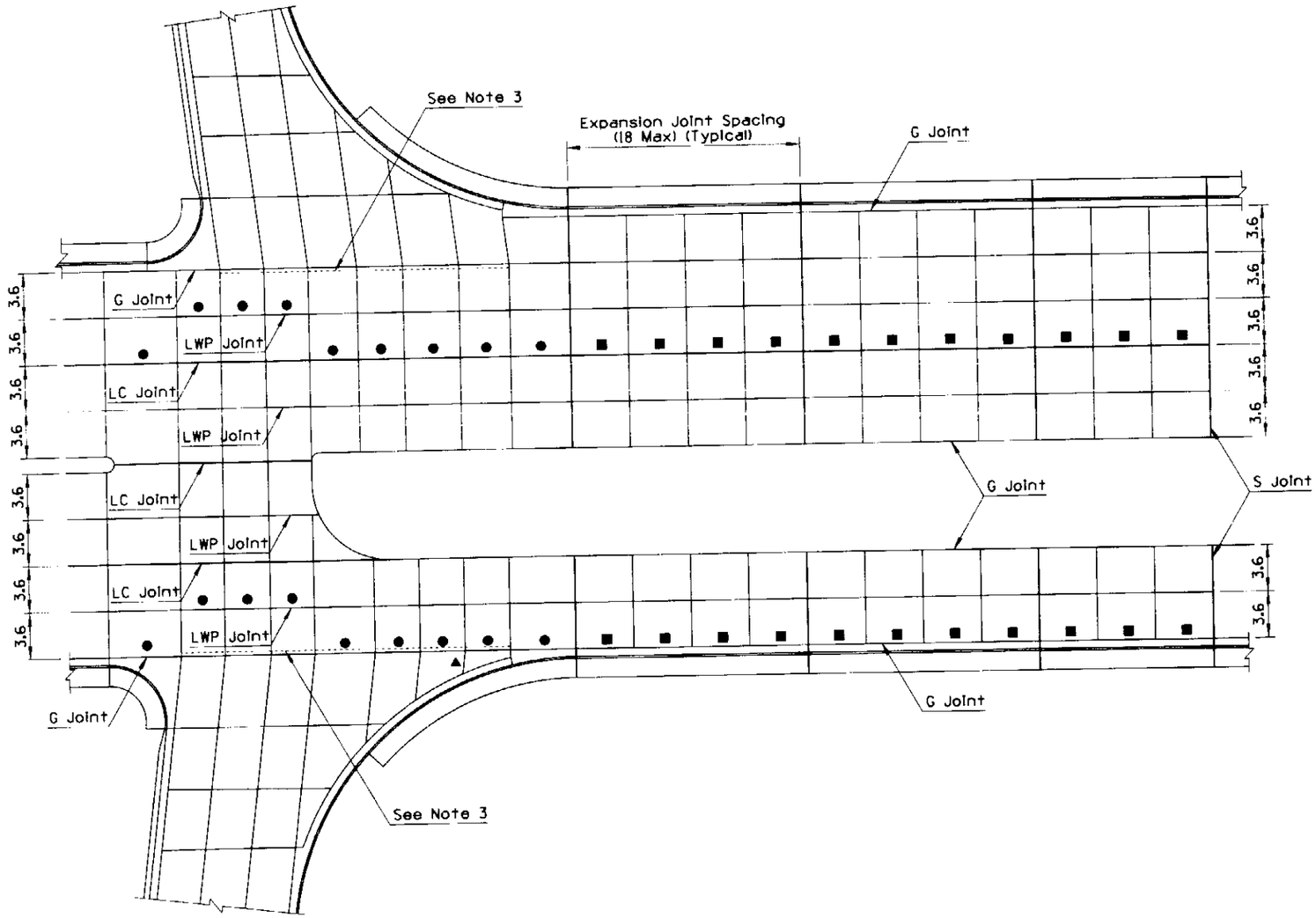

CROSSROAD AT RAMP TERMINAL

DESIGN APPROVED Terry H. Otterness	STATE OF ARIZONA DEPARTMENT OF TRANSPORTATION DIVISION OF HIGHWAYS STANDARD DRAWINGS	ISSUE 6/95
APPROVED FOR DISTRIBUTION Ronald Williams	CROSSROAD PCCP JOINTS	DRAWING NO. C-07.10

Metric

NO	DESCRIPTION OF REVISIONS	MADE BY	DATE

Metric

GENERAL NOTES

1. For paved gore area details, see Std C-08.20.
2. Parallel deceleration is to be used only under special conditions necessitating ramp curvature ahead of nose.
3. The 50:1 taper and corresponding offsets shall also apply when the main roadway has curvature or combined tangent and curvature.

* Normal to ramp.

** Distance normal to main roadway construction centerline.

All dimensions are in meters.

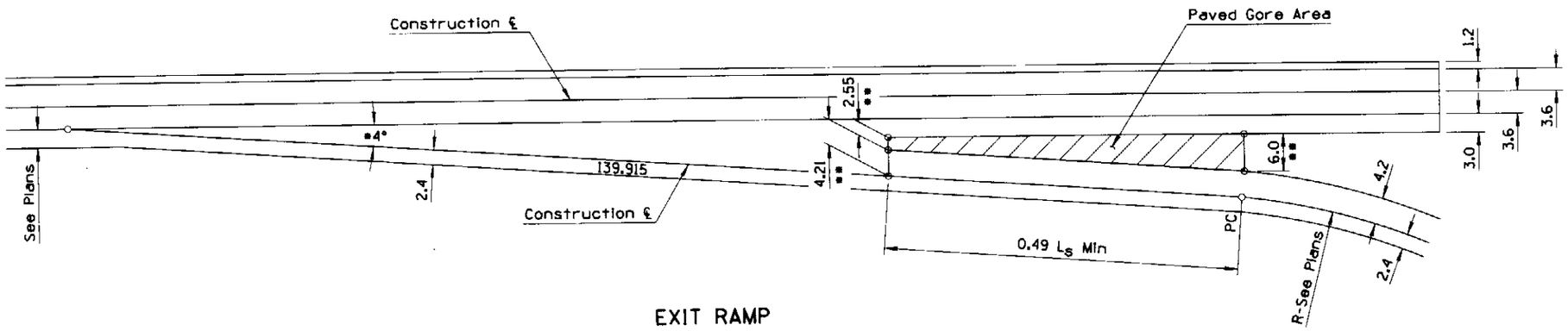

EXIT RAMP

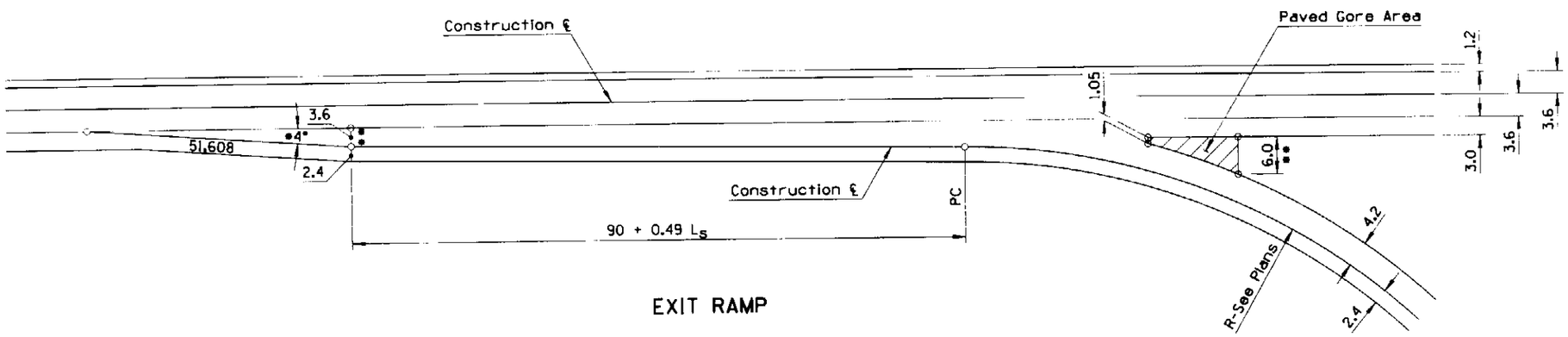

EXIT RAMP

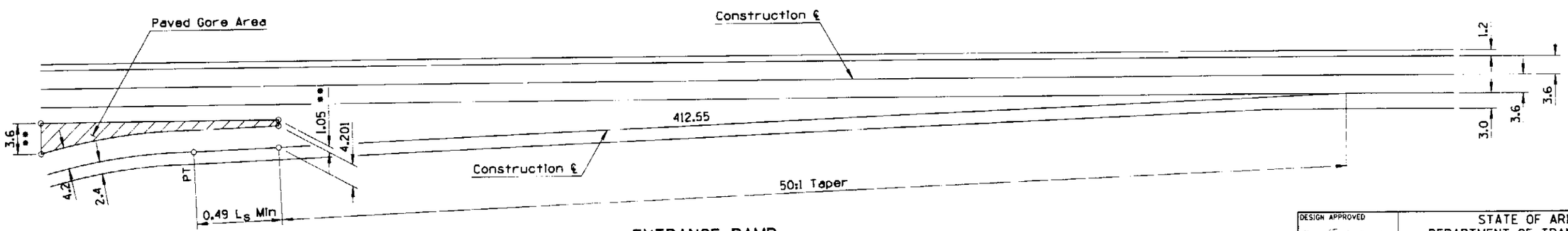

ENTRANCE RAMP

DESIGN APPROVED	STATE OF ARIZONA DEPARTMENT OF TRANSPORTATION DIVISION OF HIGHWAYS STANDARD DRAWINGS	ISSUE 6/95
APPROVED FOR DISTRIBUTION	RAMP GEOMETRICS SINGLE LANE RAMPS	DRAWING NO. C-08.10

Metric

NO	DESCRIPTION OF REVISIONS	MADE BY	DATE
1			
2			
3			
4			

Metric

GENERAL NOTES

1. Paved gore area shall be Class S Concrete, f_c = 30 Mpa or asphaltic concrete as called for on plans.
2. See Std. C-07.01 and C-07.04 for joint layout and details.

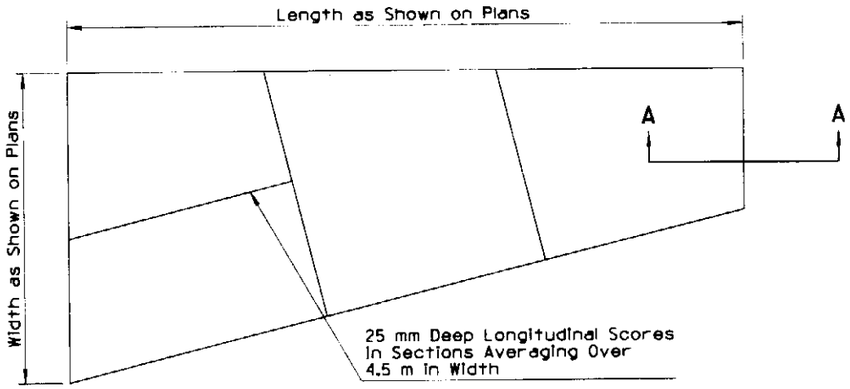

PLAN

CONCRETE GORE AREA
WITH ABUTTING CONCRETE PAVEMENT

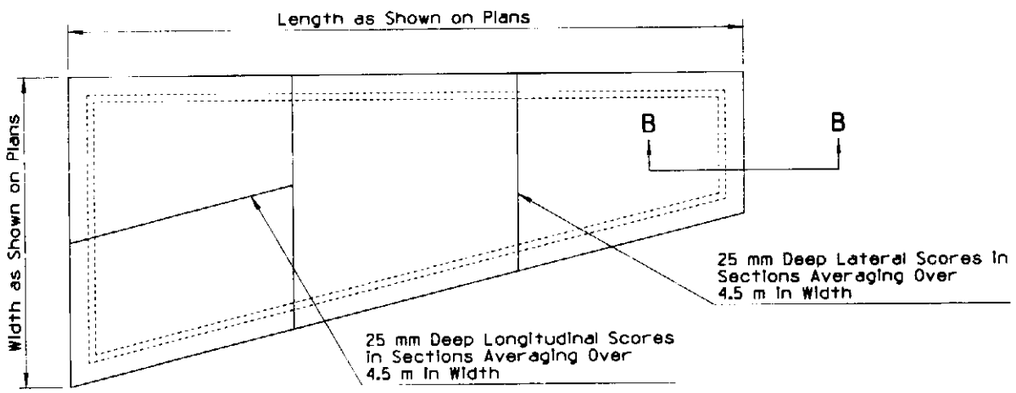

PLAN

CONCRETE GORE AREA
WITH ABUTTING AC PAVEMENT

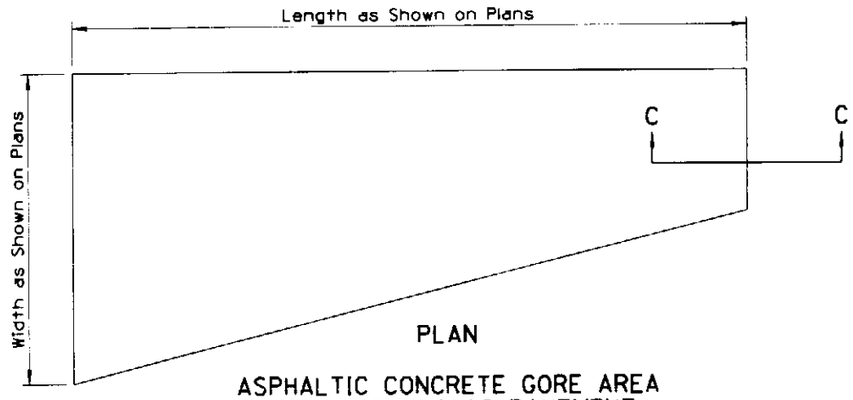

PLAN

ASPHALTIC CONCRETE GORE AREA
WITH ABUTTING AC PAVEMENT

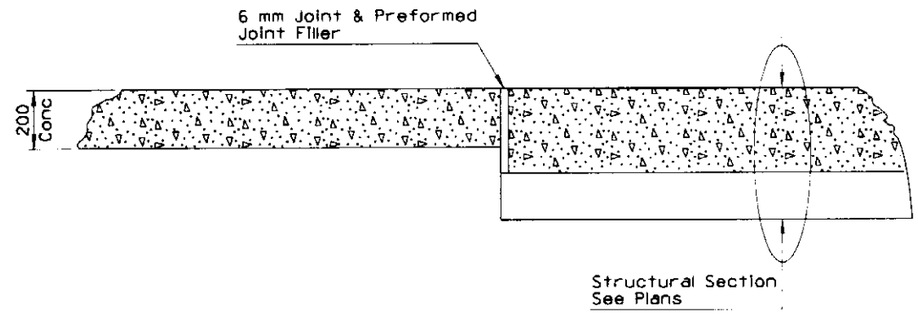

SECTION A-A

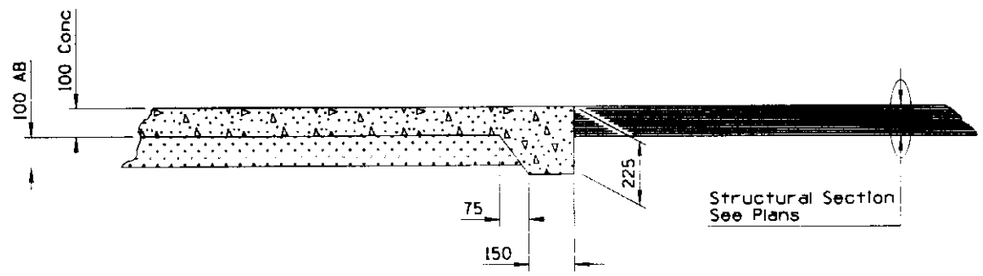

SECTION B-B

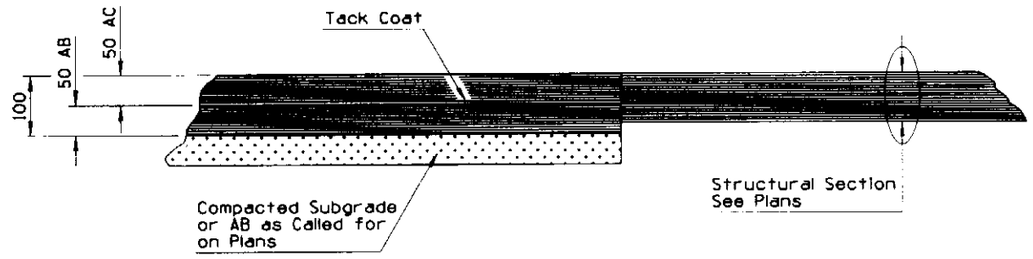

SECTION C-C

DESIGN APPROVED	STATE OF ARIZONA DEPARTMENT OF TRANSPORTATION DIVISION OF HIGHWAYS STANDARD DRAWINGS	ISSUE 6/95
APPROVED FOR DISTRIBUTION	PAVED GORE AREA	DRAWING NO. C-08.20

Metric

NO	DESCRIPTION OF REVISIONS	MADE BY	DATE
1			
2			
3			
4			

Metric

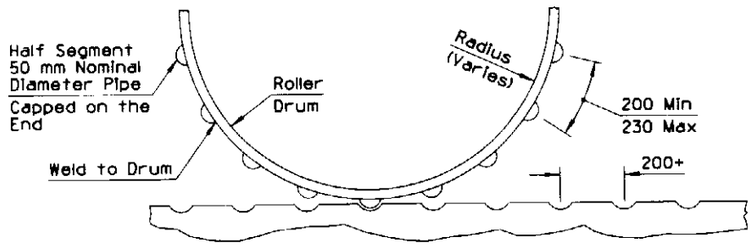

STEEL DRUM DETAIL

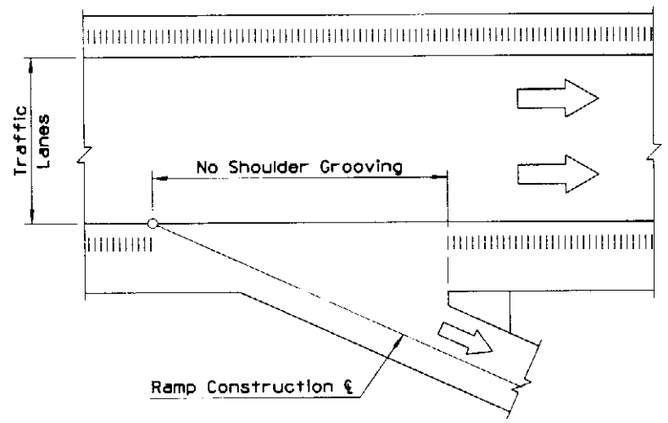

RAMP EXCEPTION DETAIL

ENTRANCE RAMP SIMILAR

GENERAL NOTES

1. Shoulder Grooving shall be applied to the shoulders of rural highways when called for on the Plans in accordance with the following shoulder widths:
   Undivided Highways - Shoulders 1.8 m and greater
   Divided Highways - Right shoulders 1.8 m and greater
   Left shoulders 1.2 m and greater
2. Shoulder Grooving shall be omitted across principal intersecting roadways or other interruptions in normal shoulder width as directed by the Engineer.
3. Shoulder Grooving shall be constructed by making indentations in the asphaltic concrete.

   The indentations may be formed by rolling the hot asphalt concrete with a roller to which half segments of 50 mm nominal diameter pipe have been welded to the drum. The pipe segments shall be 600 mm long and spaced at approximate 200 mm centers.
4. Each roller shall be equipped with an acceptable guide that extends in front of the roller and is clearly visible to the operator in order that proper alignment of the completed scored shoulder is obtained.
5. The contractor may utilize other equipment or methods to construct the shoulder grooving if approved by the Engineer.

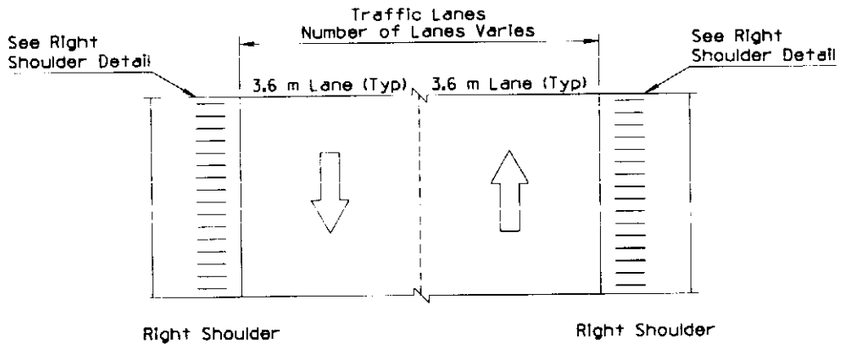

TYPICAL SHOULDER GROOVING PLAN
FOR UNDIVIDED HIGHWAYS

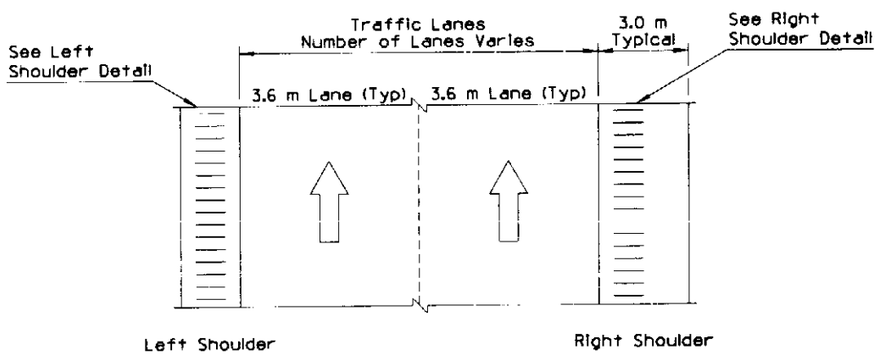

TYPICAL SHOULDER GROOVING PLAN
FOR DIVIDED HIGHWAYS

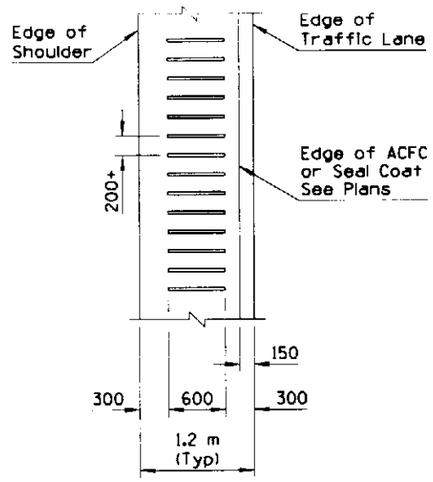

LEFT SHOULDER GROOVING DETAIL
FOR DIVIDED HIGHWAYS

TYPICALLY 1.2 m WIDE

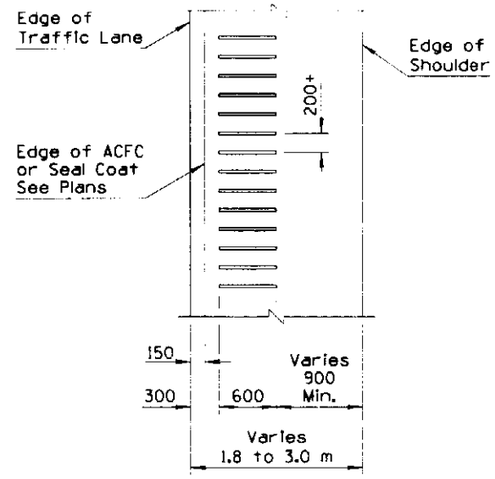

RIGHT SHOULDER GROOVING DETAIL

SHOULDERS 1.8 m AND WIDER

DESIGN APPROVED Terry H. Otterness	STATE OF ARIZONA DEPARTMENT OF TRANSPORTATION DIVISION OF HIGHWAYS STANDARD DRAWINGS	ISSUE 6/95
APPROVED FOR DISTRIBUTION Ronald C. Williams	GROOVING FOR BITUMINOUS SHOULDERS	DRAWING NO. C-09.10

Metric

NO	DESCRIPTION OF REVISIONS	MADE BY	DATE

Metric

GENERAL NOTES

1. All embankment curb shall be protected by guard rail.
2. Guard rail shall extend beyond the limits of embankment curb.
3. See Std. C-10.03 for measurement limits.
4. See Standard Specifications for spacing of reflector tabs.

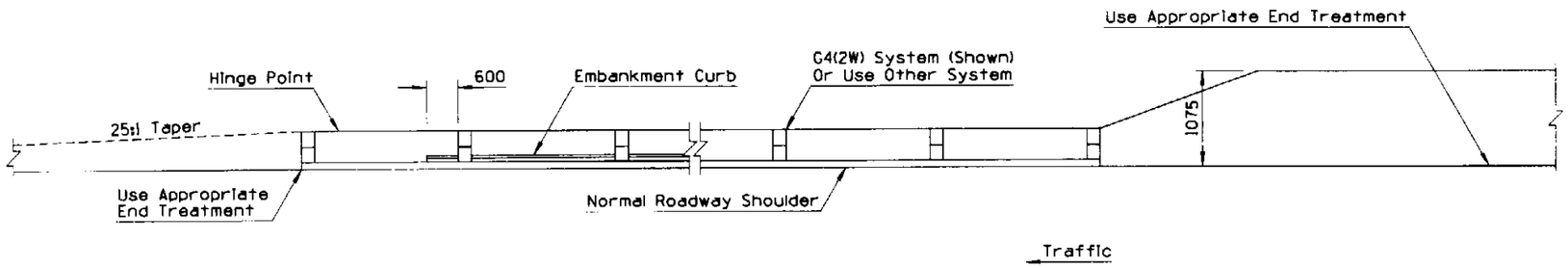

PLAN

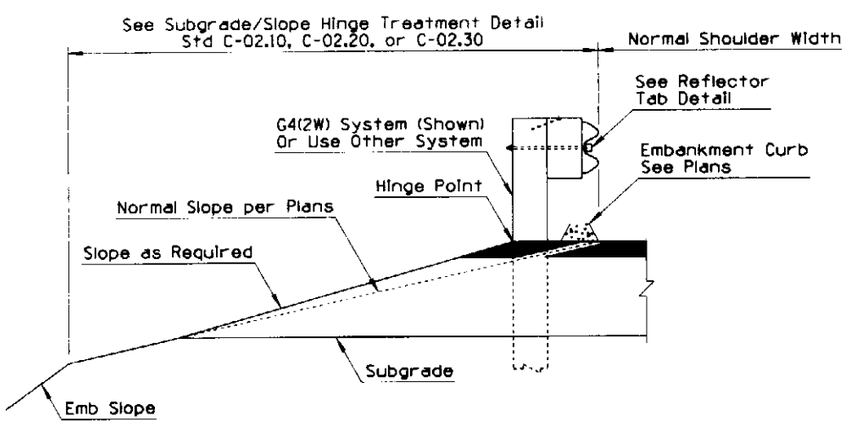

SECTION

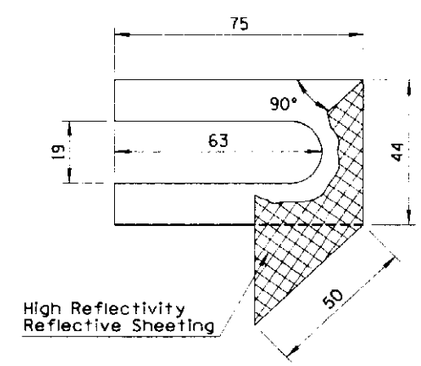

REFLECTOR TAB DETAIL

TYPE A GUARD RAIL INSTALLATION

DESIGN APPROVED	STATE OF ARIZONA DEPARTMENT OF TRANSPORTATION DIVISION OF HIGHWAYS STANDARD DRAWINGS	ISSUE 6/95
APPROVED FOR DISTRIBUTION	TYPE A GUARD RAIL INSTALLATION, REFLECTOR TAB	DRAWING NO. C-10.01

Metric

NO	DESCRIPTION OF REVISIONS	MADE BY	DATE
1			
2			
3			
4			

Metric

GENERAL NOTES

1. All embankment curb shall be protected by guard rail.
2. Guard rail shall extend beyond the limits of embankment curb.
3. See Std. C-10.03 for measurement limits.
4. See Standard Specifications for spacing of reflector tabs.

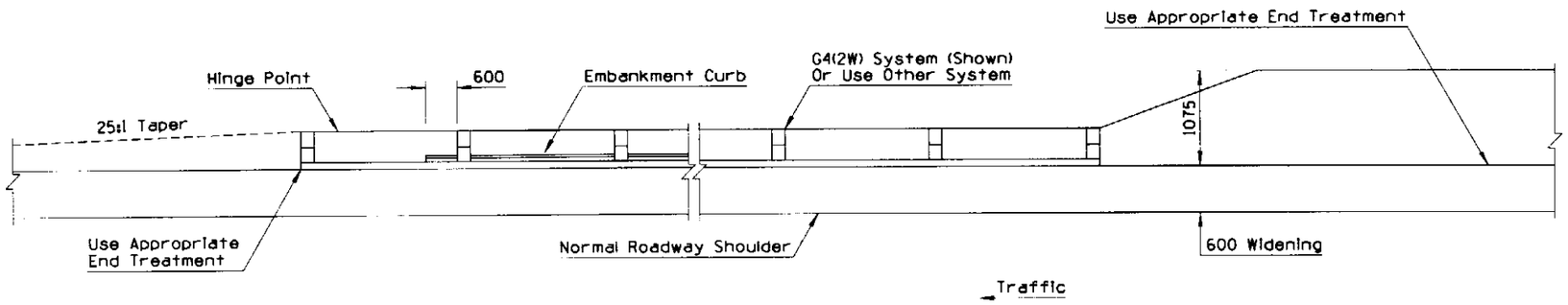

PLAN

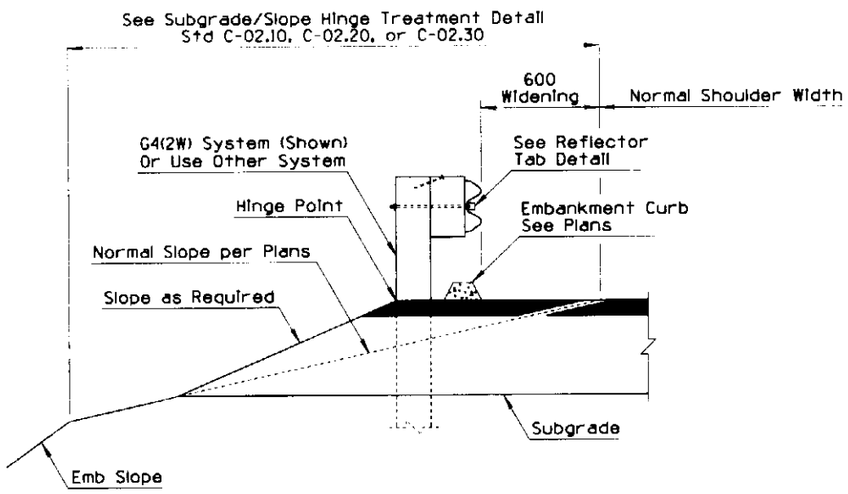

SECTION

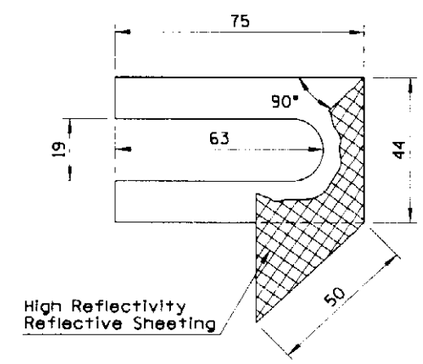

REFLECTOR TAB DETAIL

TYPE B GUARD RAIL INSTALLATION

DESIGN APPROVED APPROVED FOR DISTRIBUTION	STATE OF ARIZONA DEPARTMENT OF TRANSPORTATION DIVISION OF HIGHWAYS STANDARD DRAWINGS	ISSUE 6/95
	TYPE B GUARD RAIL INSTALLATION, REFLECTOR TAB	DRAWING NO. C-10.02

Metric

NO	DESCRIPTION OF REVISIONS	MADE BY	DATE
3			
2			
1			

Metric

GENERAL NOTES

1. Length shall be as shown unless otherwise indicated on project plans.
2. Post type (Timber or Steel) for transitions shall match post type of adjoining guard rail.

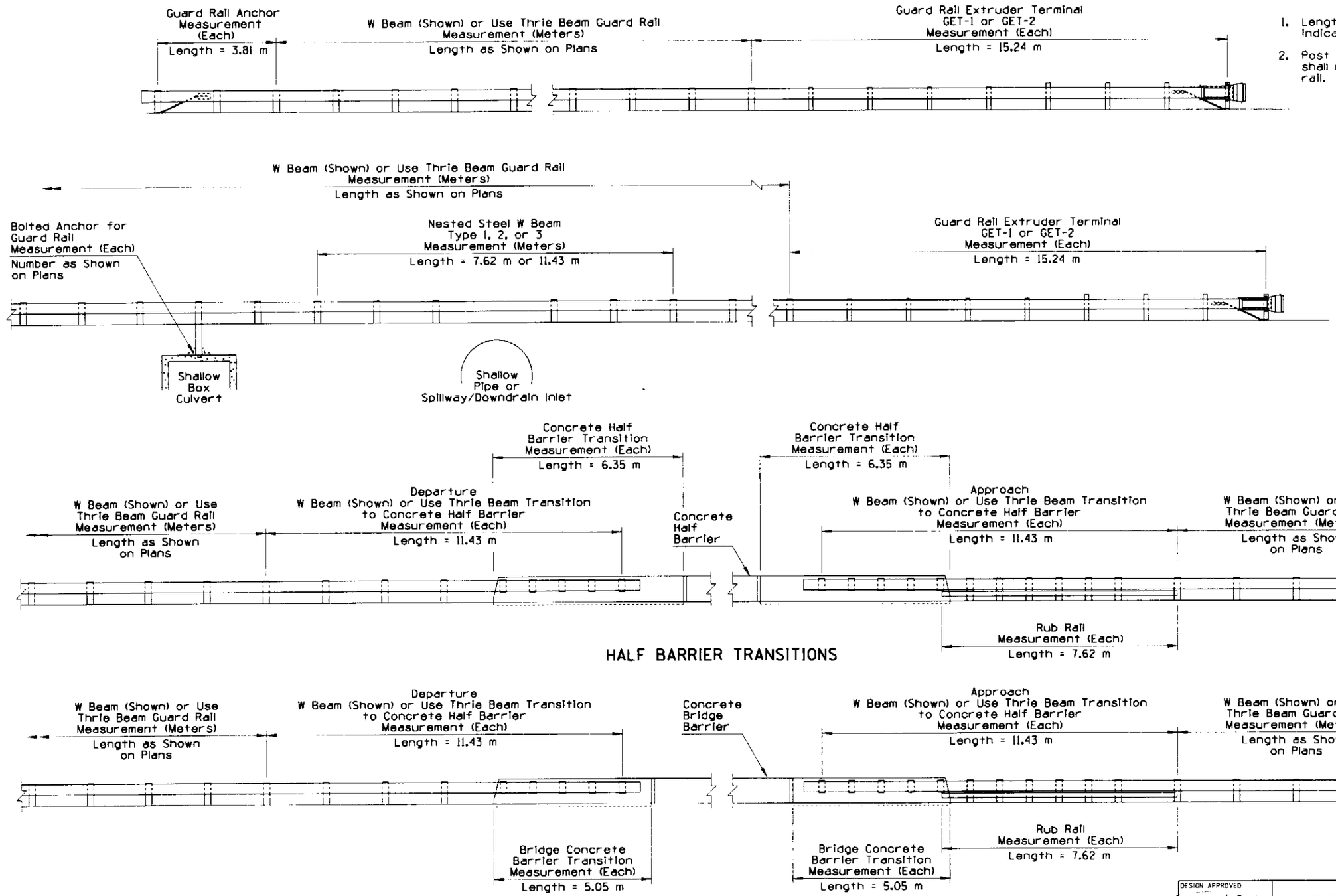

BRIDGE BARRIER TRANSITIONS

With Concrete Barrier Transitions
Constructed on Top of Wingwalls

DESIGN APPROVED Henry H. Otterness	STATE OF ARIZONA DEPARTMENT OF TRANSPORTATION DIVISION OF HIGHWAYS STANDARD DRAWINGS	ISSUE 6/95
APPROVED FOR DISTRIBUTION Ronald Williams	MEASUREMENT LIMITS FOR W BEAM AND THRIE BEAM SYSTEM	DRAWING NO. C-10.03 Sheet 1 of 2

Metric

NO	DESCRIPTION OF REVISIONS	MADE BY	DATE

Metric

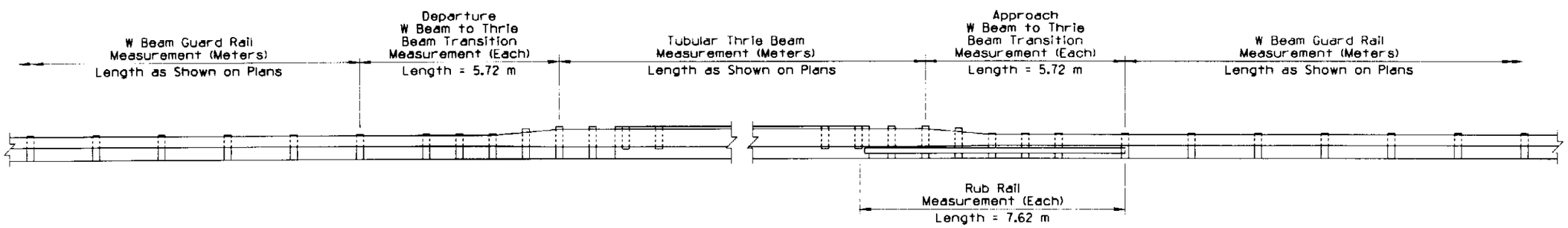

THRIE BEAM BRIDGE RETROFIT

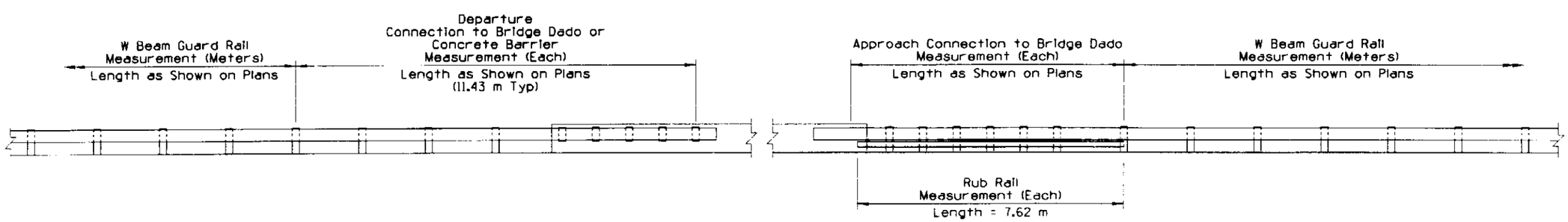

BRIDGE DADO RETROFIT

DESIGN APPROVED	STATE OF ARIZONA DEPARTMENT OF TRANSPORTATION DIVISION OF HIGHWAYS STANDARD DRAWINGS	ISSUE 6/95
APPROVED FOR DISTRIBUTION	MEASUREMENT LIMITS FOR W BEAM AND THRIE BEAM SYSTEM	DRAWING NO. C-10.03 Sheet 2 of 2

Metric

NO.	DESCRIPTION OF REVISIONS	MADE BY	DATE
1			
2			
3			
4			

Metric

GENERAL NOTES

1. See plans and barrier summary sheets for location and type of guardrail. Timber post installation shown.
2. See Construction Standard Drawings C-05.10, 05.12, 10.01, and 10.02 for dimensions and details not shown.
3. Type B guard rail installation shown. For Type A guard rail installation, use Type D-1 Curb and Gutter instead of the Type D-2 Curb and Gutter shown. For Type A guard rail installation, flare the Guard Rail Extruder Terminal as per Standard Drawing C-10.41.
4. See Plans for type and location of drainage facilities.
5. Bituminous joint filler (13 mm) shall be placed where the curb & gutter or concrete widening abuts slotted drains, catch basins, dados, barrier, etc. Scored joints, 50 mm in depth, shall be placed to match adjacent joints in PCCP or at 4.5 m intervals where adjacent to AC or continuously reinforced concrete pavement.

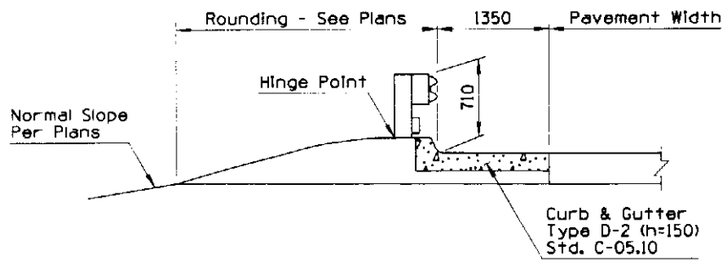

SECTION A-A

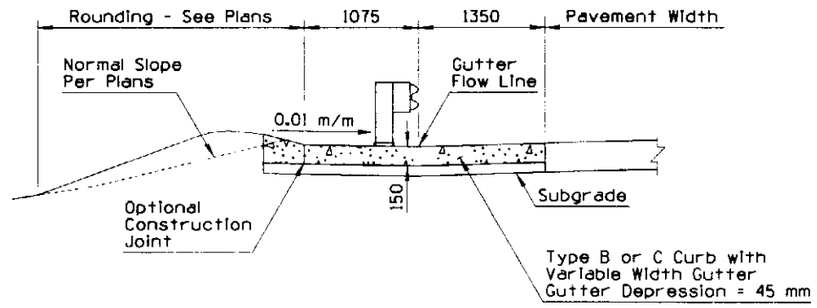

SECTION B-B

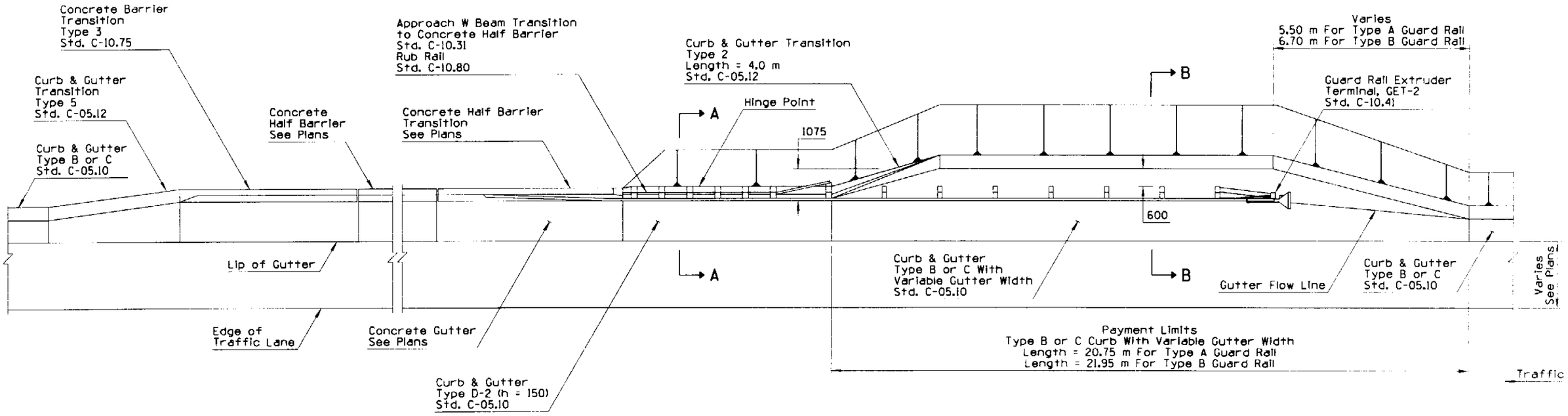

PLAN

TYPICAL HALF BARRIER TERMINAL
W/TYPE B OR C CURB & GUTTER

DESIGN APPROVED	STATE OF ARIZONA DEPARTMENT OF TRANSPORTATION DIVISION OF HIGHWAYS STANDARD DRAWINGS	ISSUE 6/95
APPROVED FOR DISTRIBUTION	HALF BARRIER TERMINAL W/TYPE B OR C CURB & GUTTER	DRAWING NO. C-10.06

Metric

NO	DESCRIPTION OF REVISIONS	MADE BY	DATE
1			
2			
3			
4			

Metric

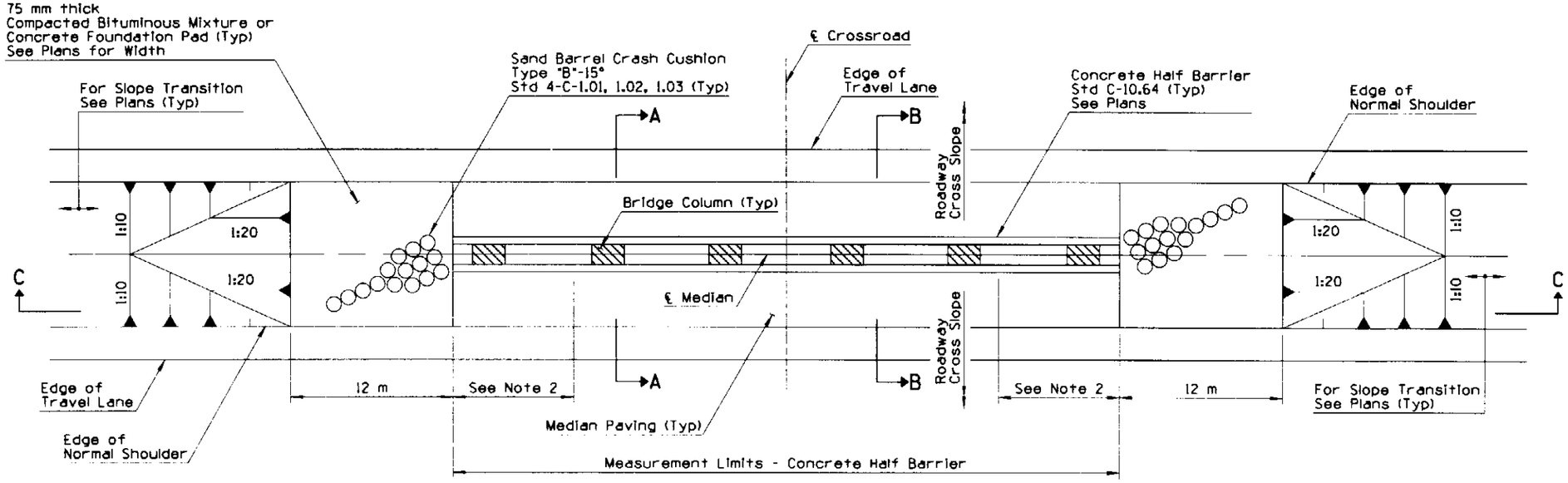

MODIFIED SINGLE PIER OR COLUMN

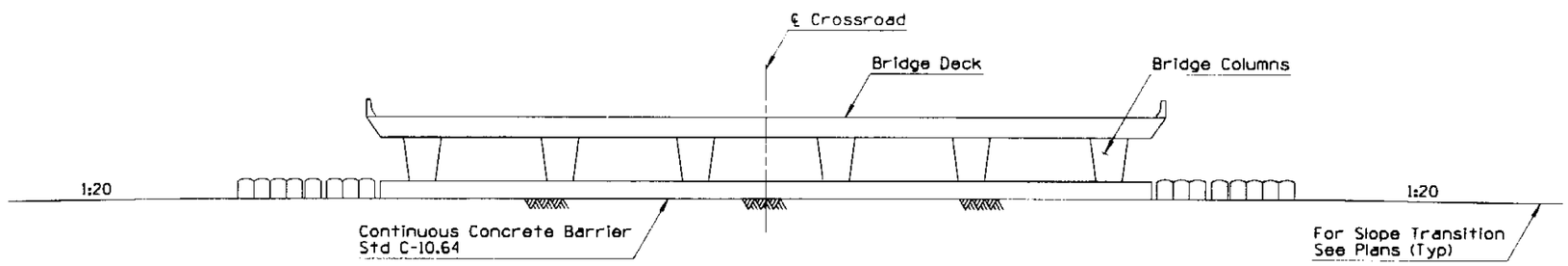

SECTION C-C

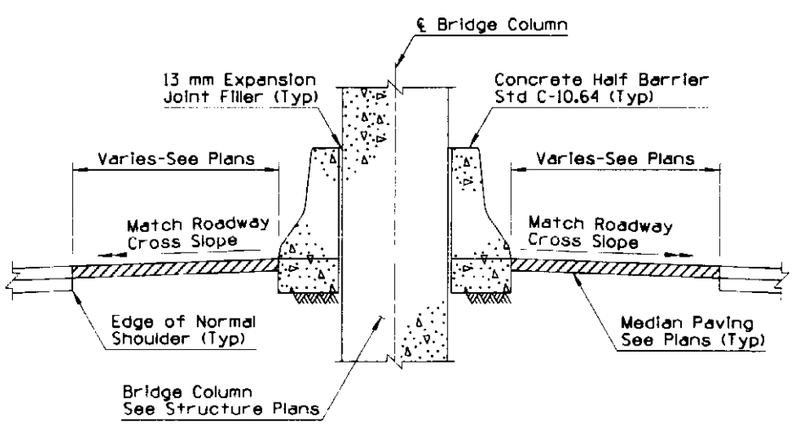

SECTION A-A

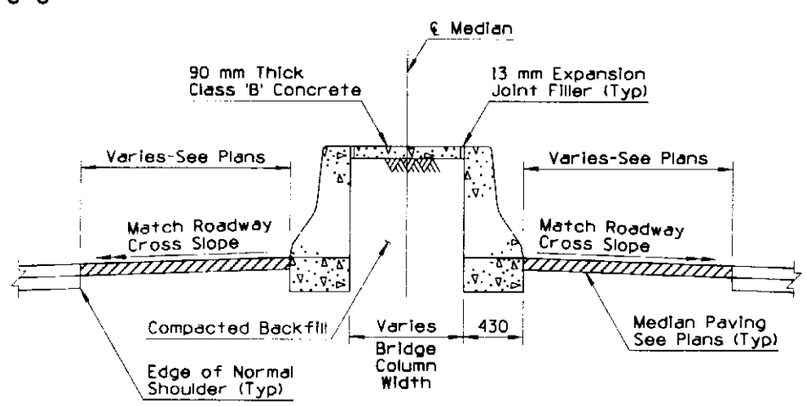

SECTION B-B

GENERAL NOTES

1. See Std 4-C-1.02 for other typical installations at bridge piers.
2. Transition median paving cross slope to meet level foundation pad. See Plans for length and location.

DESIGN APPROVED	STATE OF ARIZONA DEPARTMENT OF TRANSPORTATION DIVISION OF HIGHWAYS STANDARD DRAWINGS	ISSUE 6/95
APPROVED FOR DISTRIBUTION	BARRIER DETAILS AT PIERS	DRAWING NO. C-10.15

Metric

NO	DESCRIPTION OF REVISIONS	MADE BY	DATE

Metric

GENERAL NOTES

● - Indicates ARTBA designation

G4 (1W) SYSTEM

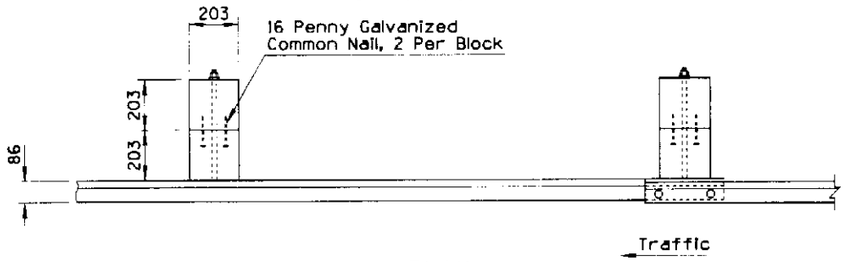

PLAN

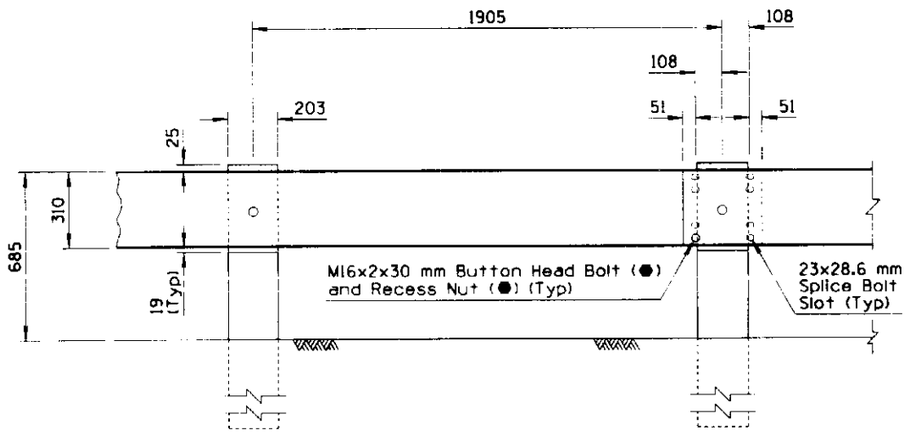

ELEVATION

G4 (2W) SYSTEM

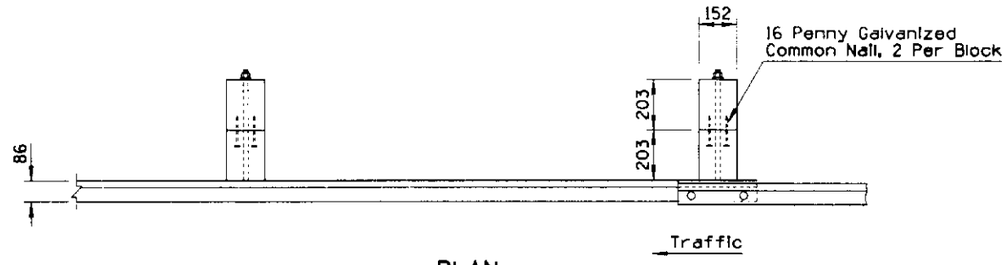

PLAN

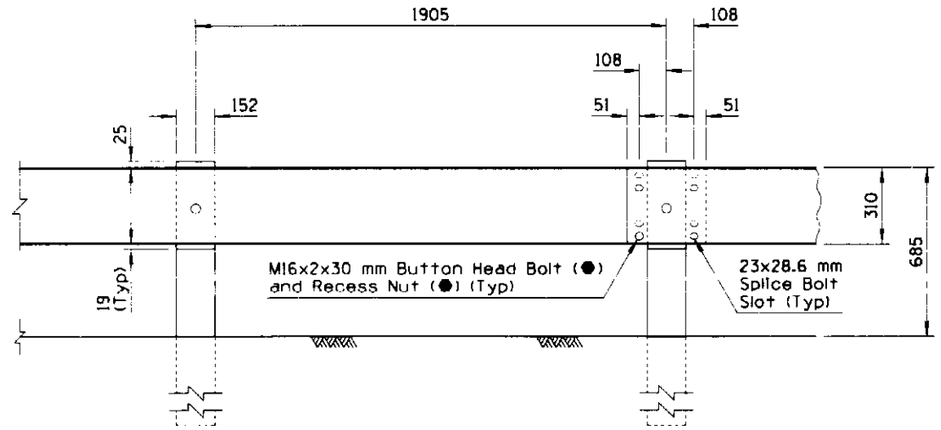

ELEVATION

G4 (1W) SYSTEM

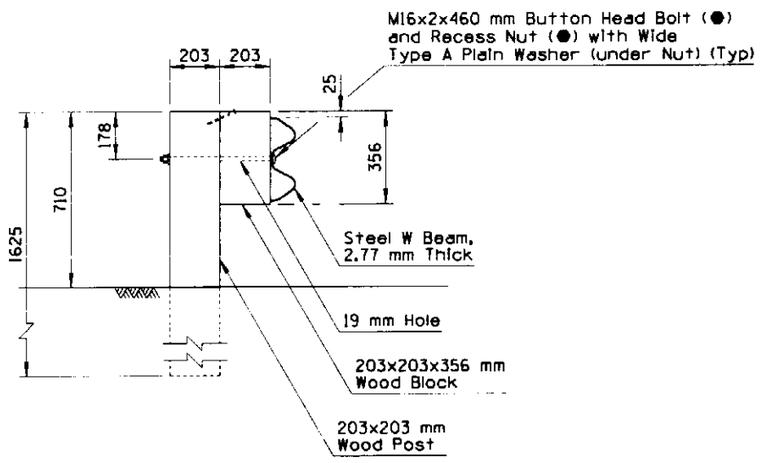

SECTION G4(1W)

G4 (2W) SYSTEM

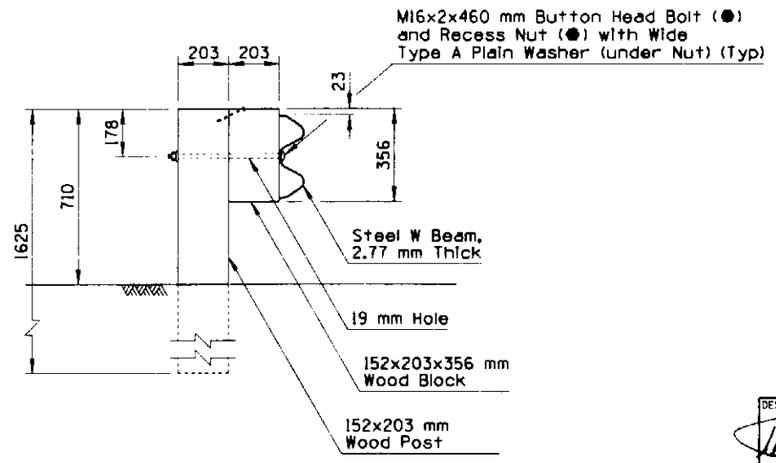

SECTION G4(2W)

DESIGN APPROVED Terry H. Otterness	STATE OF ARIZONA DEPARTMENT OF TRANSPORTATION DIVISION OF HIGHWAYS STANDARD DRAWINGS	ISSUE 6/95
APPROVED FOR DISTRIBUTION Ronald A. Williams	G4(1W) AND G4(2W) BLOCKED OUT W BEAM (TIMBER POST)	DRAWING NO. C-10.20

Metric

NO	DESCRIPTION OF REVISIONS	MADE BY	DATE
1			
2			
3			
4			

Metric

GENERAL NOTES

● - Indicates ARTBA designation

G4 (1S) SYSTEM

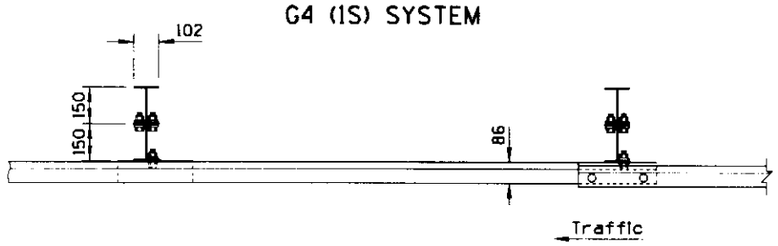

PLAN

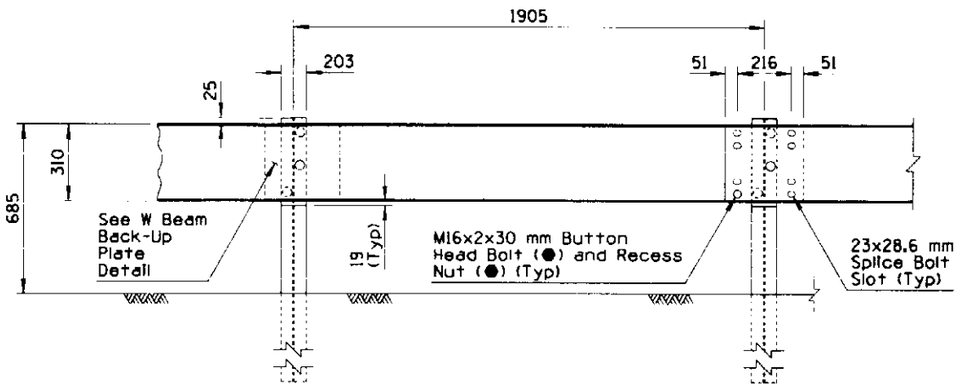

ELEVATION

G4 (1S) SYSTEM

G4 (2S) SYSTEM

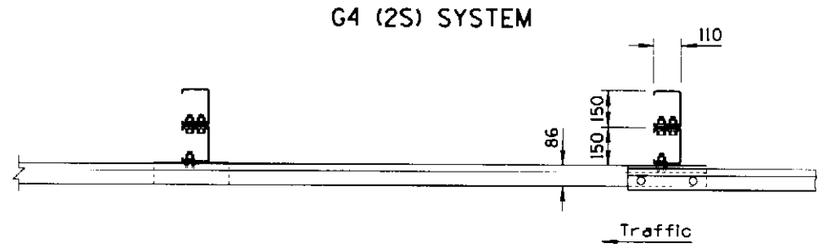

PLAN

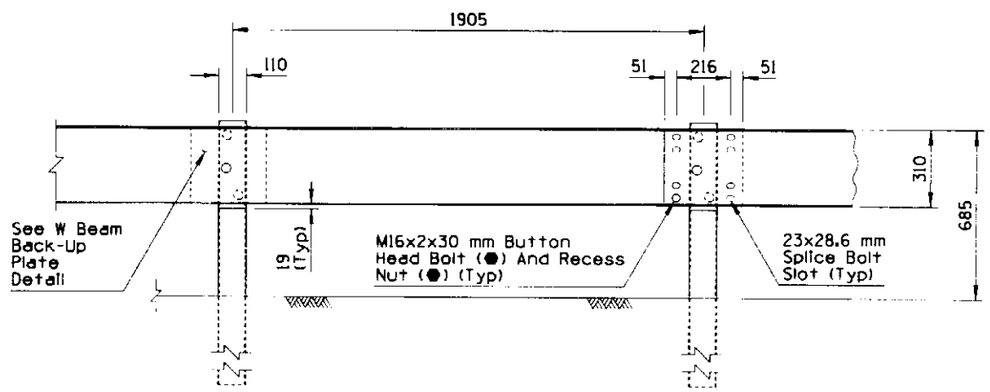

ELEVATION

G4 (2S) SYSTEM

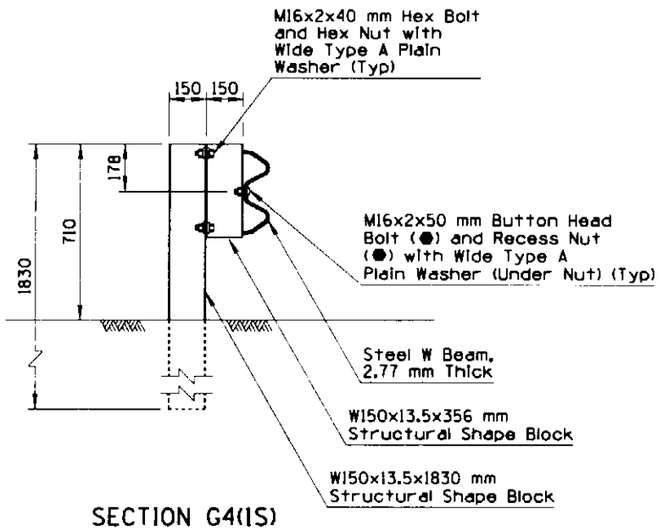

SECTION G4(1S)

SHOWN WITHOUT CURB

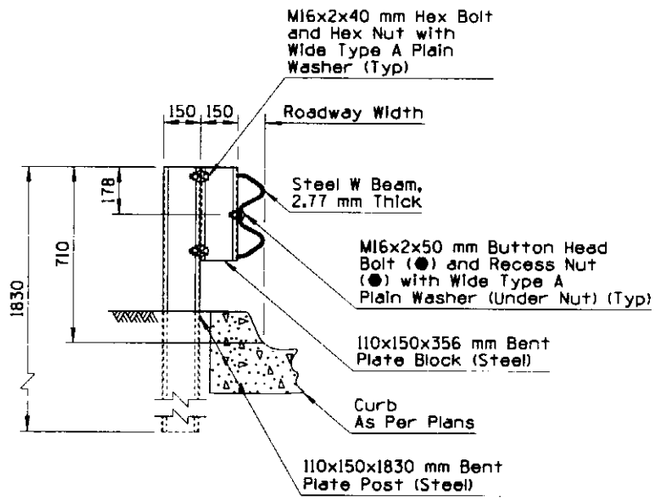

SECTION G4(2S)

SHOWN WITH CURB

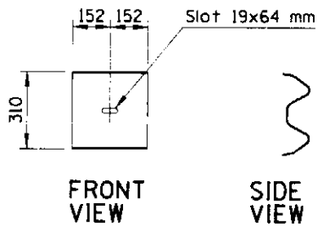

W BEAM BACK-UP PLATE DETAIL

DESIGN APPROVED APPROVED FOR DISTRIBUTION	STATE OF ARIZONA DEPARTMENT OF TRANSPORTATION DIVISION OF HIGHWAYS STANDARD DRAWINGS	ISSUE 6/95
	G4(1S) AND G4(2S) BLOCKED OUT W BEAM (STEEL POST)	DRAWING NO. C-10.21

Metric

NO	DESCRIPTION OF REVISIONS	MADE BY	DATE
1			
2			
3			
4			

Metric

GENERAL NOTES

1. Height of curb shall not exceed 100 mm.

● - Indicates ARTBA designation

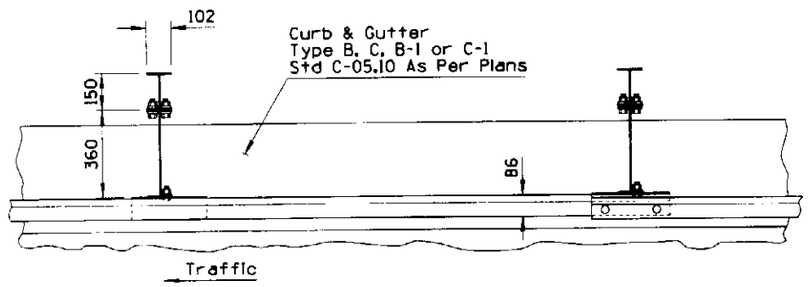

PLAN

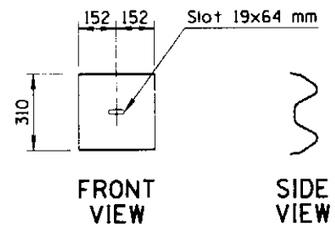

W BEAM BACK-UP PLATE DETAIL

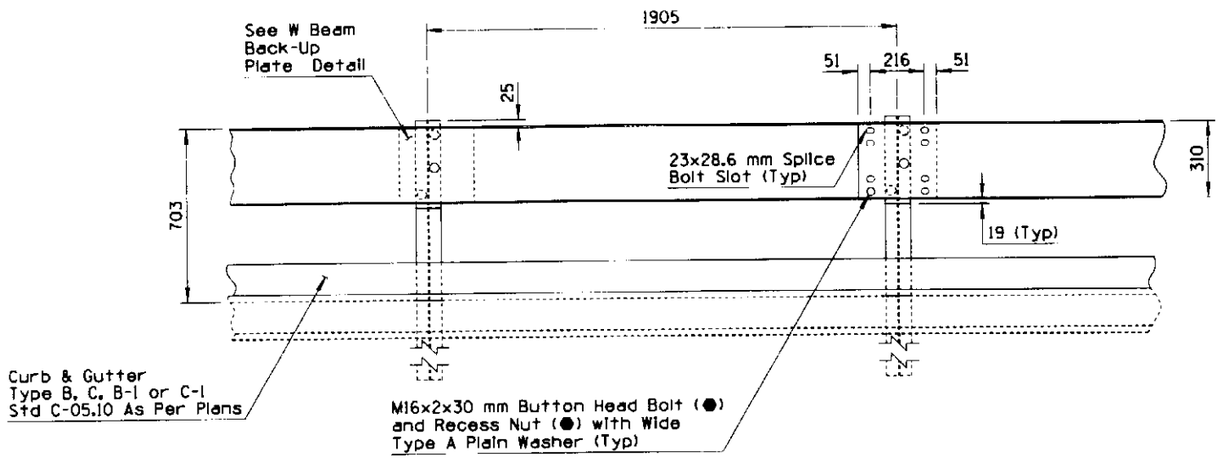

ELEVATION

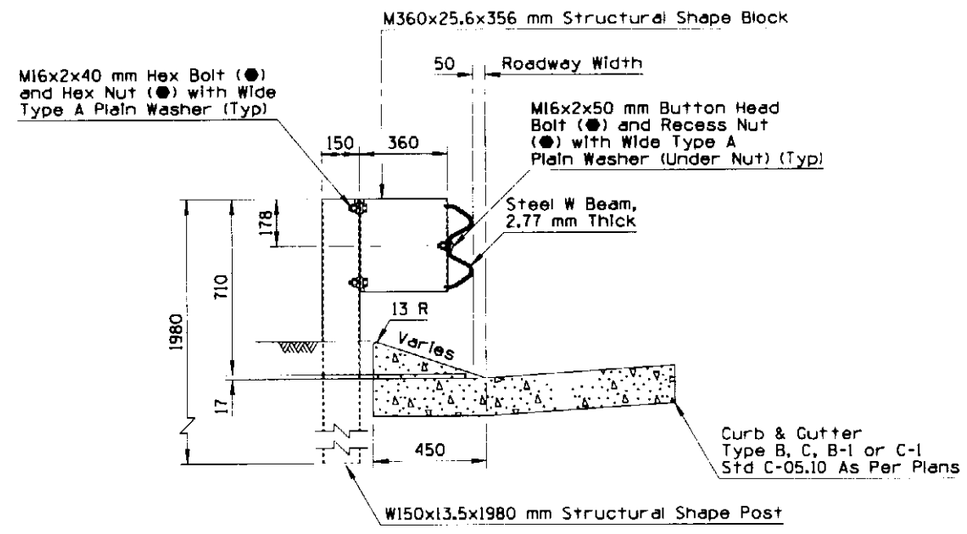

SECTION

G4(IS-MODIFIED)

DESIGN APPROVED	STATE OF ARIZONA DEPARTMENT OF TRANSPORTATION DIVISION OF HIGHWAYS STANDARD DRAWINGS	ISSUE 6/95
APPROVED FOR DISTRIBUTION	G4(MODIFIED) BLOCKED OUT W BEAM WITH SPECIAL CURB AND GUTTER G4(IS-MODIFIED) (STEEL POST)	DRAWING NO. C-10.22 Sheet 1 of 2

Metric

NO	DESCRIPTION OF REVISIONS	MADE BY	DATE

Metric

GENERAL NOTES

● - Indicates ARTBA designation

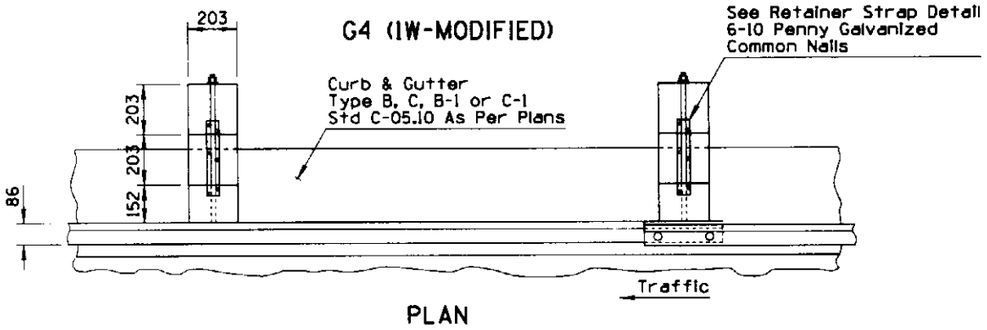

PLAN

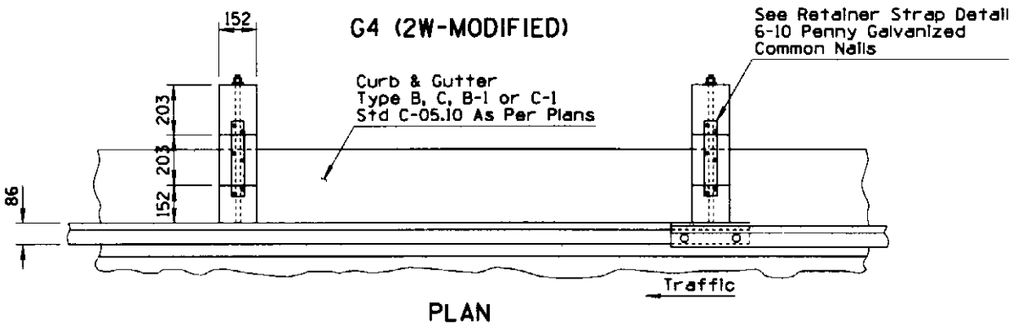

PLAN

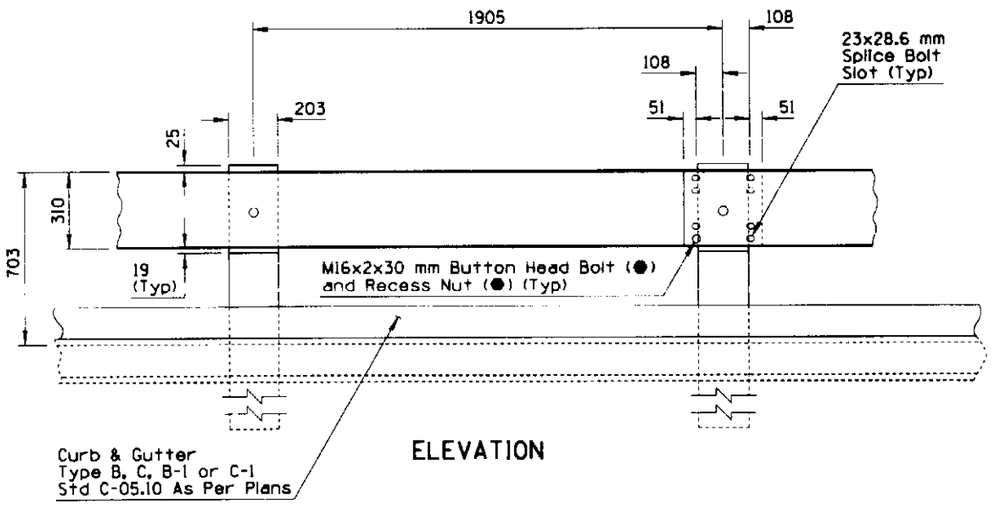

ELEVATION

G4 (1W-MODIFIED)

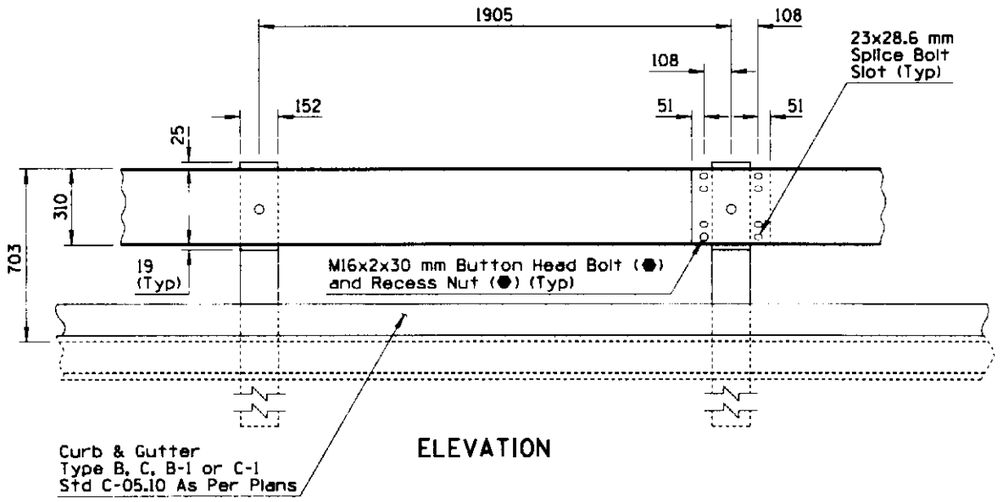

ELEVATION

G4 (2W-MODIFIED)

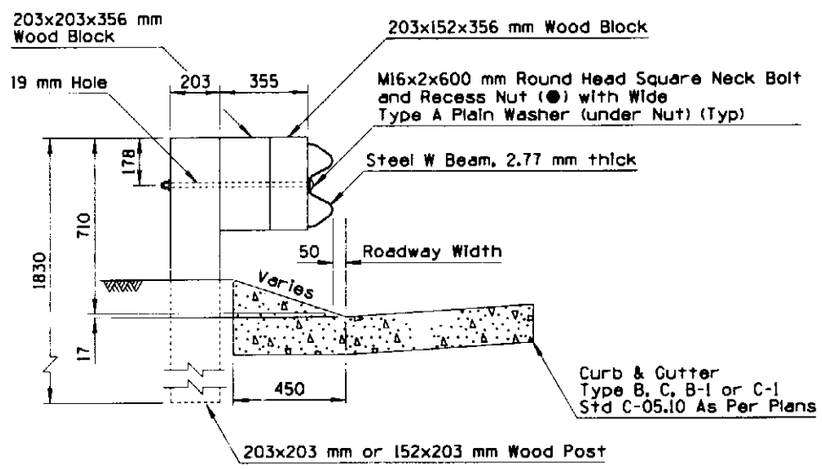

SECTION G4(1W-MODIFIED)

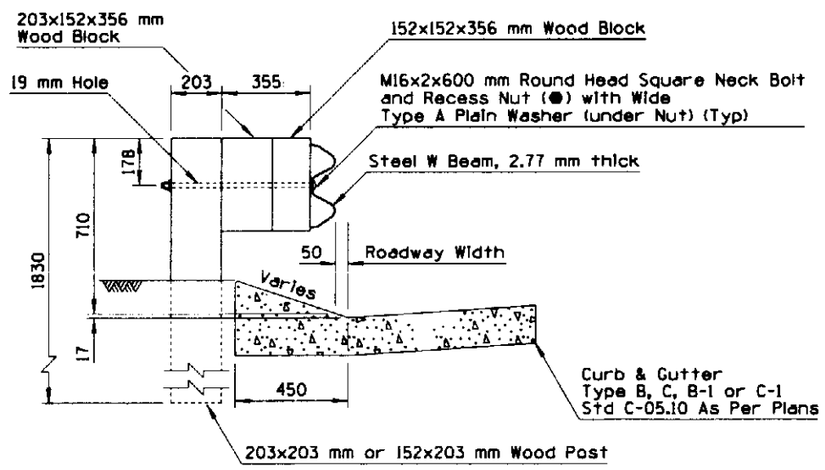

SECTION G4(2W-MODIFIED)

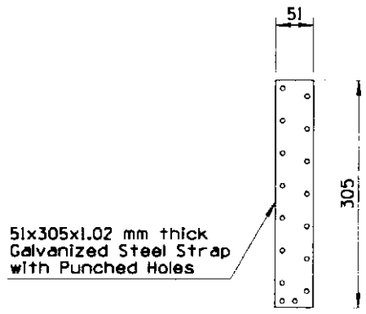

RETAINER STRAP DETAIL

DESIGN APPROVED Terry H. Otterness	STATE OF ARIZONA DEPARTMENT OF TRANSPORTATION DIVISION OF HIGHWAYS STANDARD DRAWINGS	ISSUE 6/95
APPROVED FOR DISTRIBUTION Ronald A. Williams	G4(MODIFIED) BLOCKED OUT W BEAM WITH SPECIAL CURB AND GUTTER G4(1W) AND G4(2W) (TIMBER POST)	DRAWING NO. C-10.22 Sheet 2 of 2

Metric

NO	DESCRIPTION OF REVISIONS	MADE BY	DATE
1			
2			
3			
4			

Metric

GENERAL NOTES

● - Indicates ARTBA designation

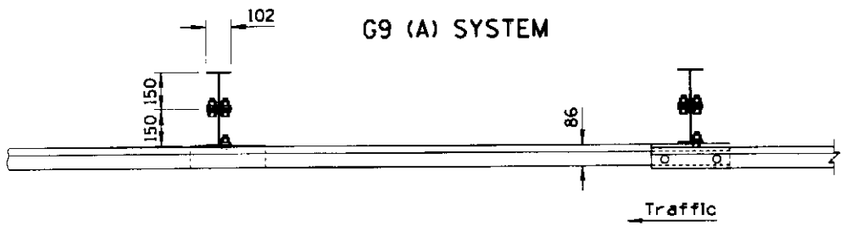

G9 (A) SYSTEM

PLAN

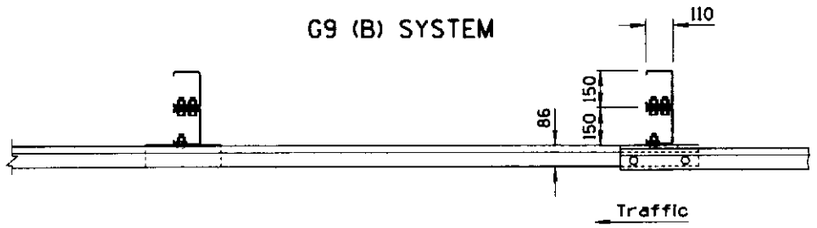

G9 (B) SYSTEM

PLAN

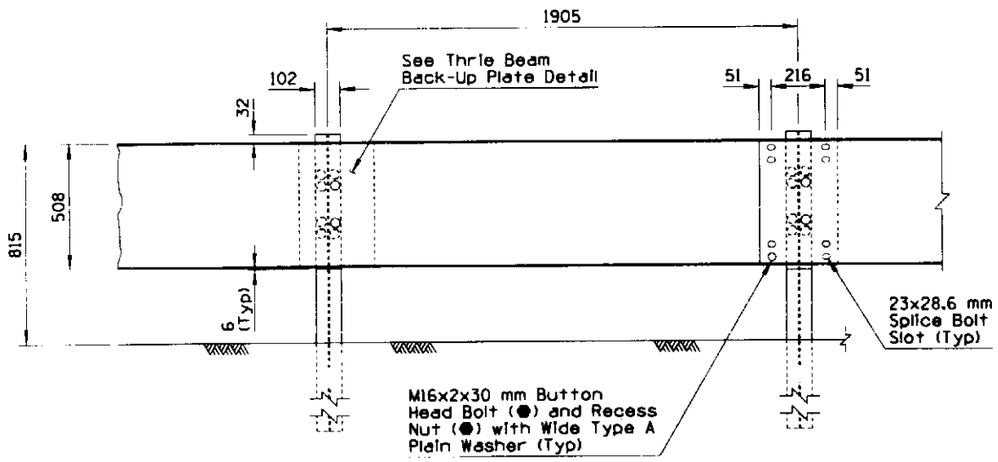

ELEVATION

G9 (A) SYSTEM

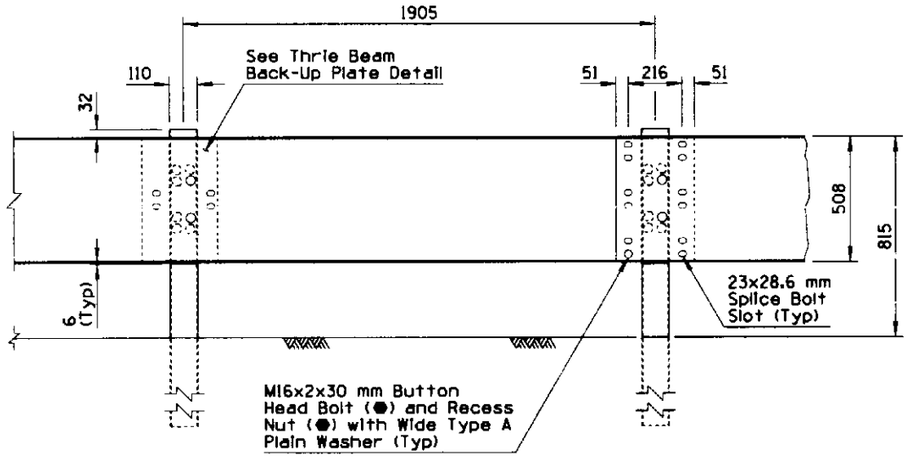

ELEVATION

G9 (B) SYSTEM

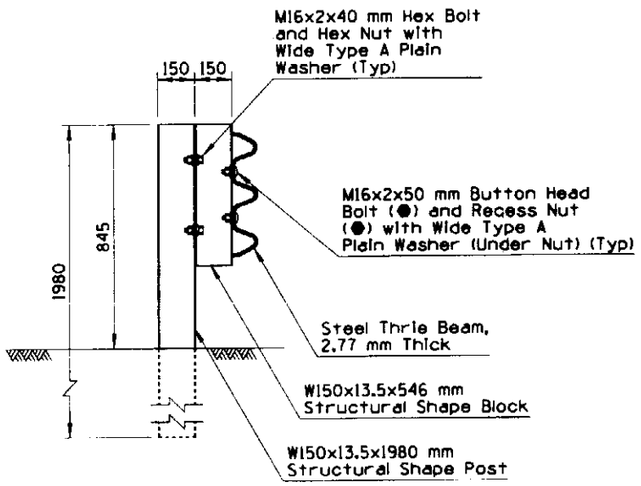

SECTION G9(A)

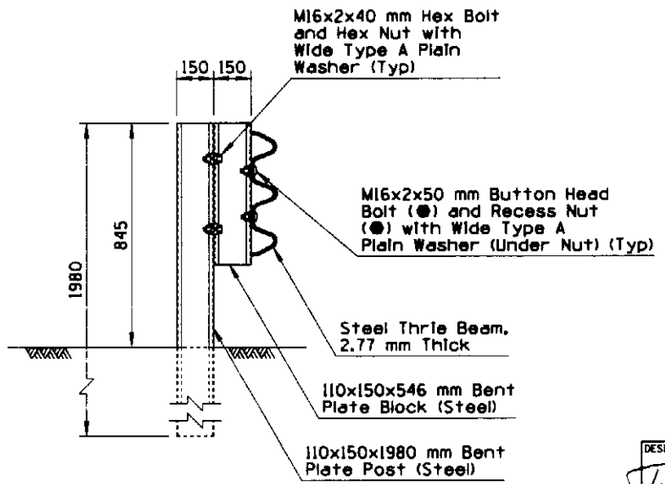

SECTION G9(B)

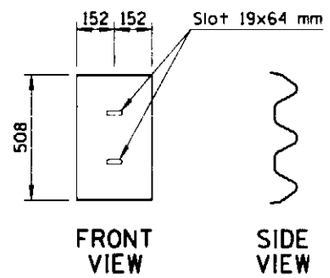

THRIE BEAM BACK-UP PLATE DETAIL

DESIGN APPROVED Terry H. Otterson	STATE OF ARIZONA DEPARTMENT OF TRANSPORTATION DIVISION OF HIGHWAYS STANDARD DRAWINGS	ISSUE 6/95
APPROVED FOR DISTRIBUTION Ronald A. Williams	G9(A) AND G9(B) BLOCKED OUT THRIE BEAM (STEEL POST)	DRAWING NO. C-10.23

Metric

NO.	DESCRIPTION OF REVISIONS	MADE BY	DATE
1			
2			
3			
4			

Metric

GENERAL NOTES

● - Indicates ARTBA designation

G9 (C) SYSTEM

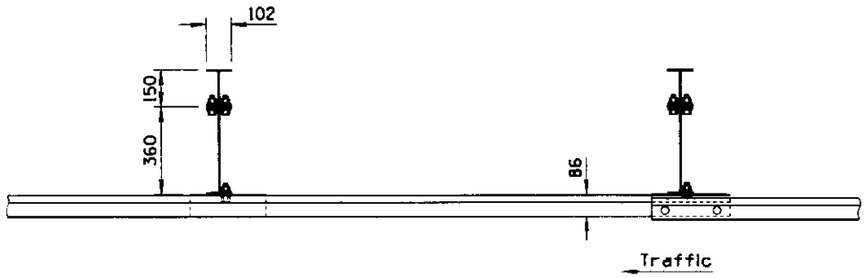

PLAN

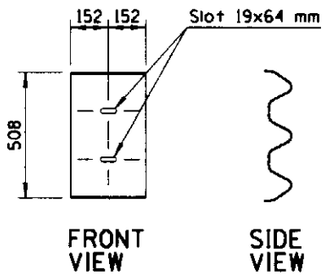

THRIE BEAM BACK-UP PLATE DETAIL

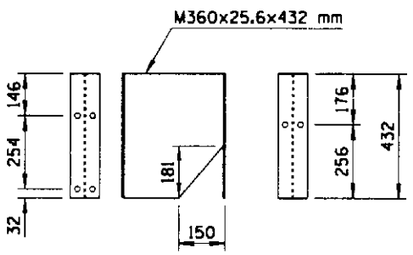

STRUCTURAL SHAPE BLOCK DETAIL

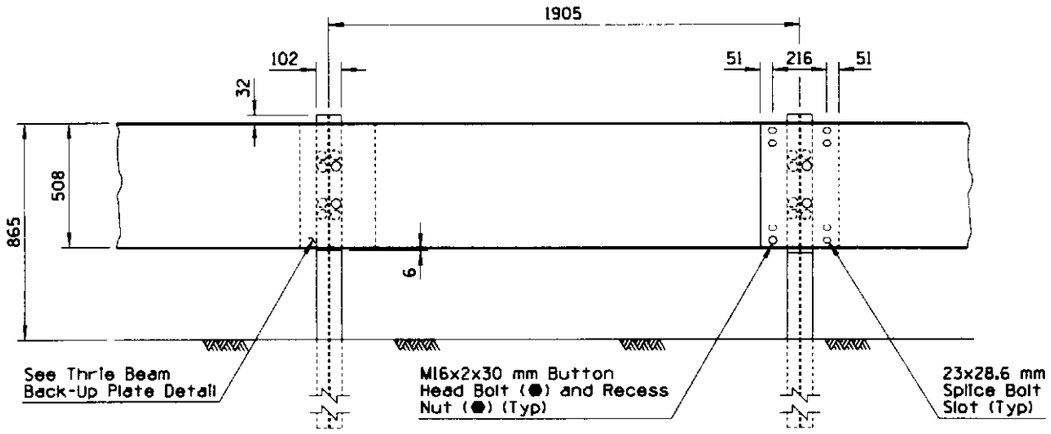

ELEVATION

G9 (C) SYSTEM

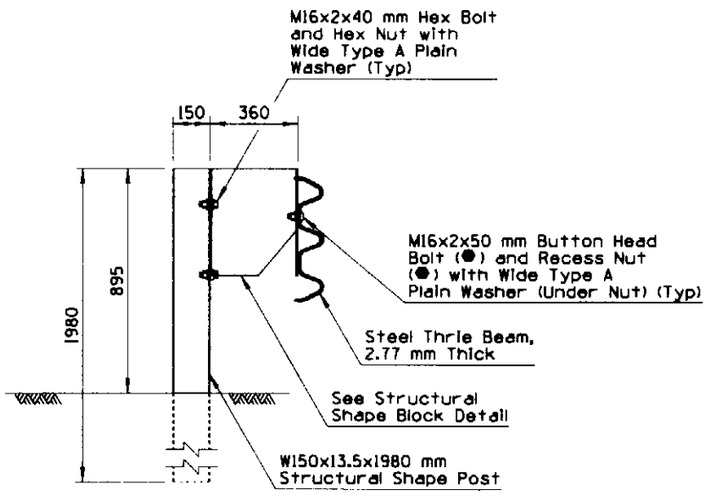

SECTION G9(C)

DESIGN APPROVED Terry H. Otterson	STATE OF ARIZONA DEPARTMENT OF TRANSPORTATION DIVISION OF HIGHWAYS STANDARD DRAWINGS	ISSUE 6/95
APPROVED FOR DISTRIBUTION Ronald Williams	G9(C) BLOCKED OUT THRIE BEAM (STEEL POST)	DRAWING NO. C-10.24

Metric

NO	DESCRIPTION OF REVISIONS	MADE BY	DATE
1			
2			
3			
4			

Metric

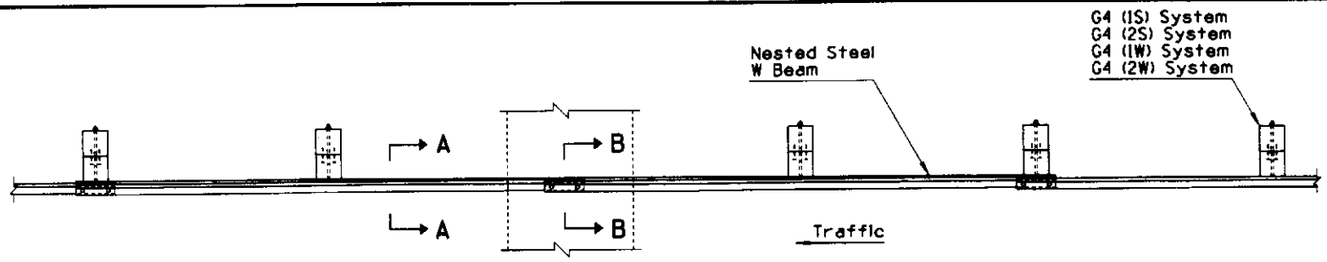

PLAN

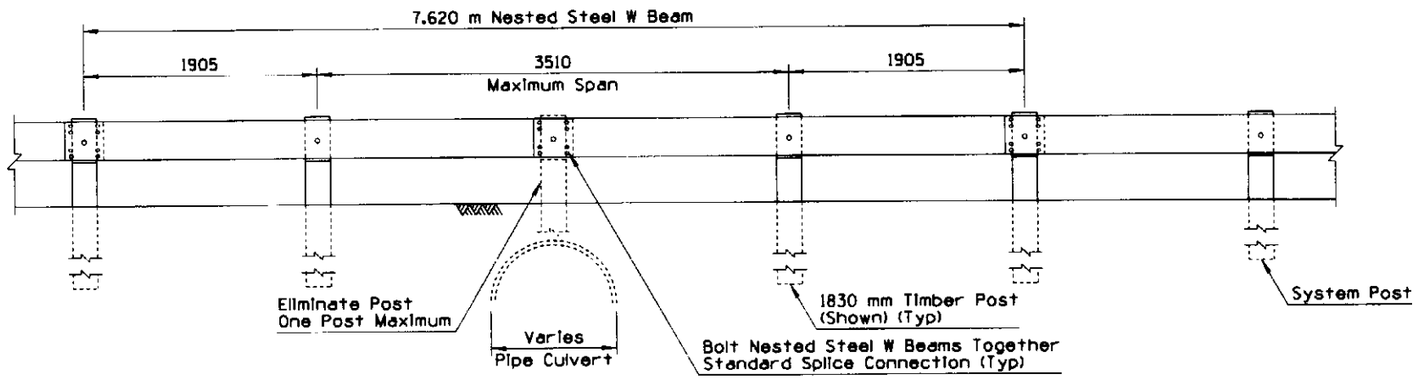

ELEVATION
NESTED STEEL W BEAM - TYPE 1 - SHORT SPAN
(Splice Connection Inside Span) Length = 7.620 m

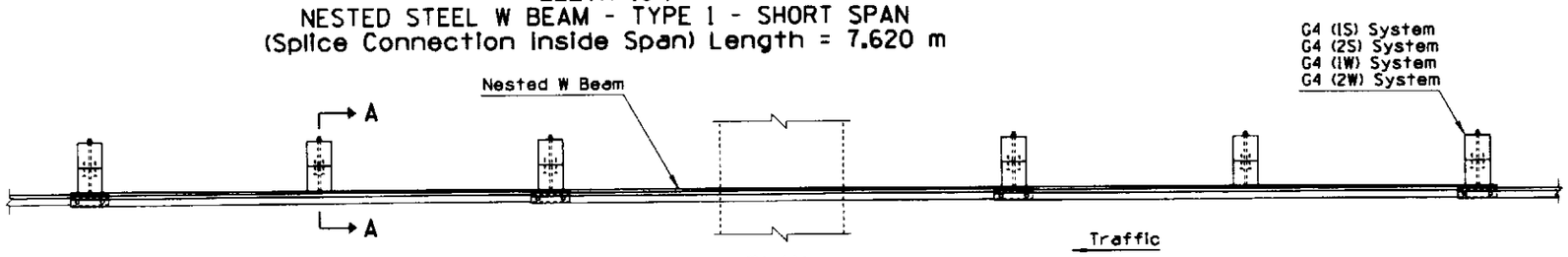

PLAN

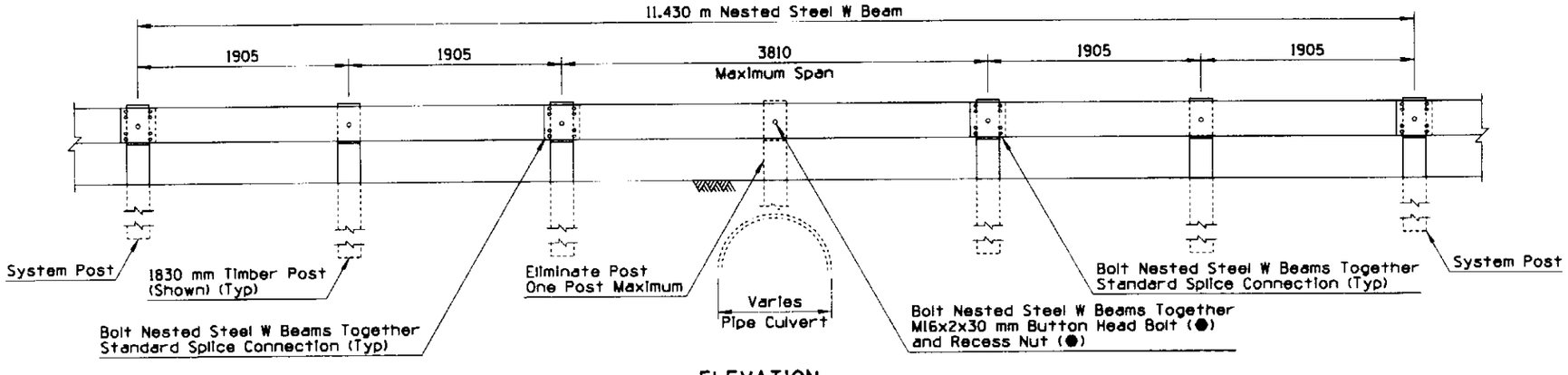

ELEVATION
NESTED STEEL W BEAM - TYPE 2 - SHORT SPAN
(Splice Connection Outside Span) Length = 11.430 m

GENERAL NOTES

1. ● - Indicates ARTBA designation.
2. See Std C-10.20 and C-10.21 for additional information and dimensions.

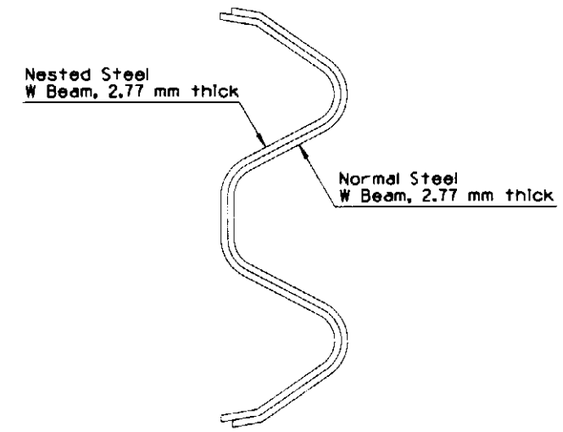

SECTION A-A

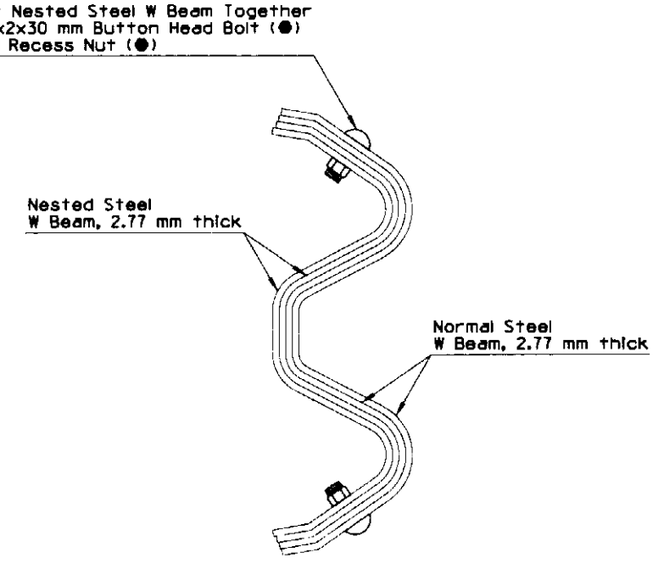

SECTION B-B

DESIGN APPROVED	STATE OF ARIZONA DEPARTMENT OF TRANSPORTATION DIVISION OF HIGHWAYS STANDARD DRAWINGS	ISSUE 6/95
APPROVED FOR DISTRIBUTION	NESTED STEEL W BEAM SHORT SPAN - TYPE 1 AND 2	DRAWING NO. C-10.28 Sheet 1 of 2

Metric

NO	DESCRIPTION OF REVISIONS	MADE BY	DATE
1			
2			
3			
4			

Metric

GENERAL NOTES

1. Use Type 3 Nested Steel W Beam to span downdrain or spillway inlets as shown in the plan view.
2. Use Type 3 to span multiple obstructions as shown in the elevation view.

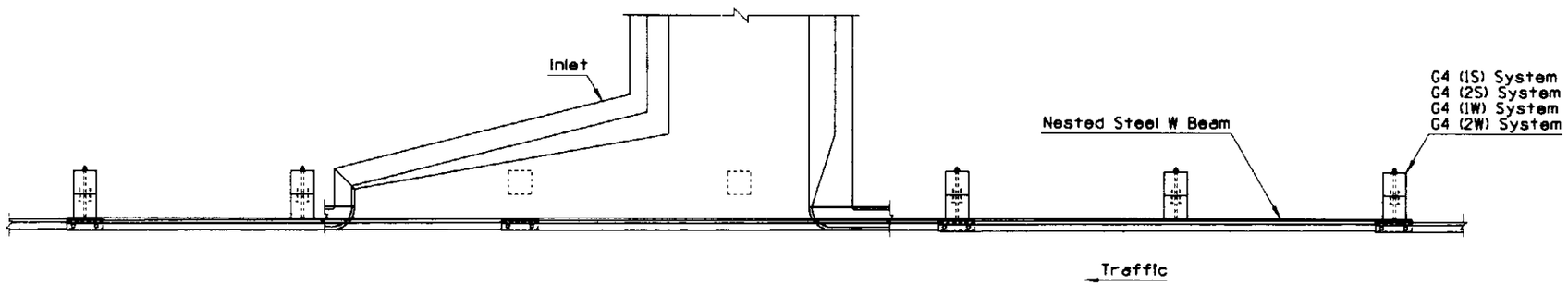

PLAN

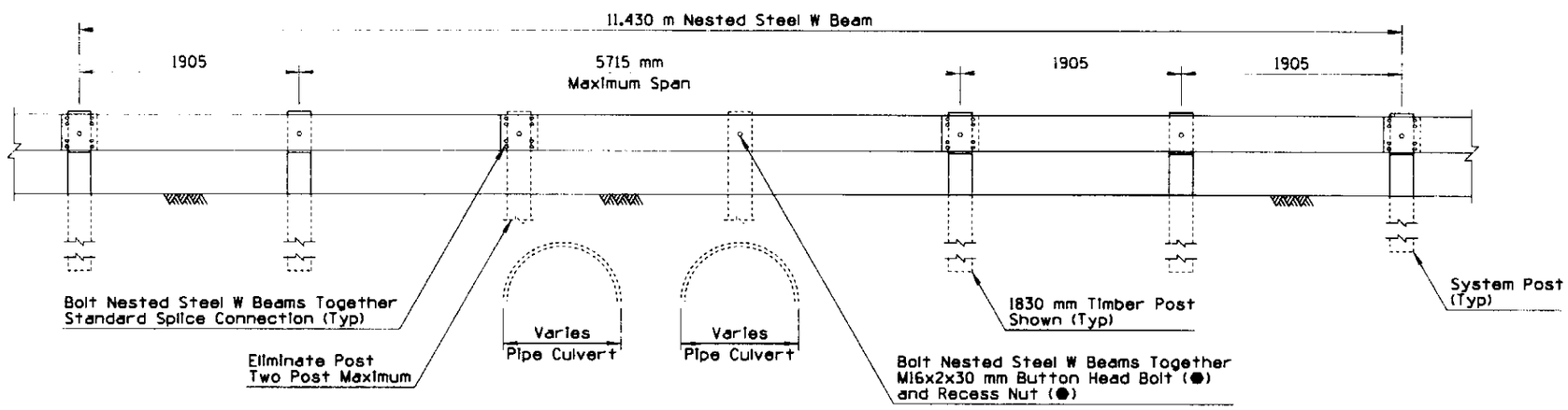

ELEVATION

NESTED STEEL W BEAM - TYPE 3 - LONG SPAN
Length = 11.430 m

DESIGN APPROVED	STATE OF ARIZONA DEPARTMENT OF TRANSPORTATION DIVISION OF HIGHWAYS STANDARD DRAWINGS	ISSUE 6/95
APPROVED FOR DISTRIBUTION	NESTED STEEL W BEAM LONG SPAN - TYPE 3	DRAWING NO. C-10.28 Sheet 2 of 2

Metric

NO	DESCRIPTION OF REVISIONS	MADE BY	DATE
1			
2			
3			
4			

GENERAL NOTES

1. See Std C-10.20 and C-10.21 for additional information and dimensions.

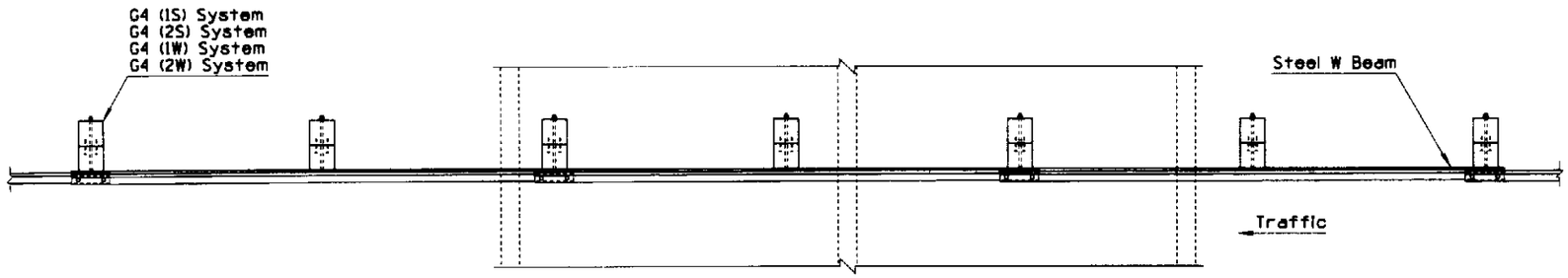

PLAN

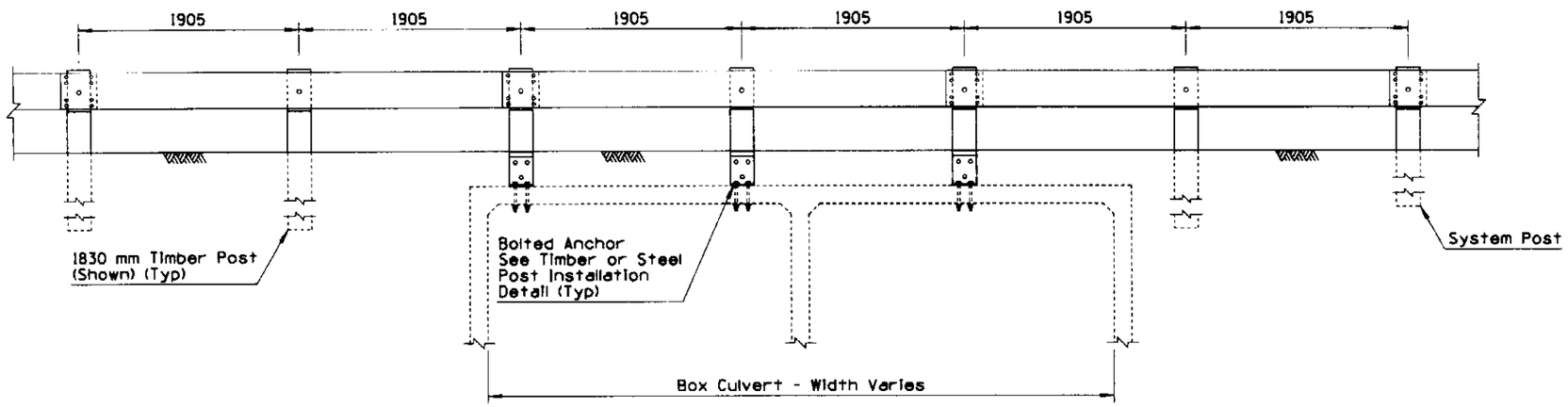

ELEVATION

BOLTED ANCHOR
BOX CULVERT INSTALLATION

DESIGN APPROVED	STATE OF ARIZONA DEPARTMENT OF TRANSPORTATION DIVISION OF HIGHWAYS STANDARD DRAWINGS	ISSUE 6/95
APPROVED FOR DISTRIBUTION	BOLTED ANCHOR GUARD RAIL	DRAWING NO. C-10.29 Sheet 1 of 2

NO	DESCRIPTION OF REVISIONS	MADE BY	DATE
1			
2			
3			
4			

Metric

GENERAL NOTES

1. Drill through top of box culvert with rotary drill.
2. Bracket may be made of one piece hot bent, or two pieces welded together.
3. Short timber posts anchored to box culvert roof shall be 203x203 mm only.

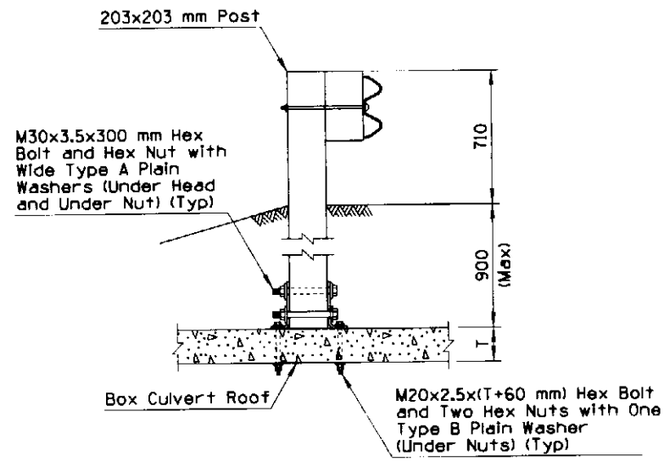

INSTALLATION DETAIL

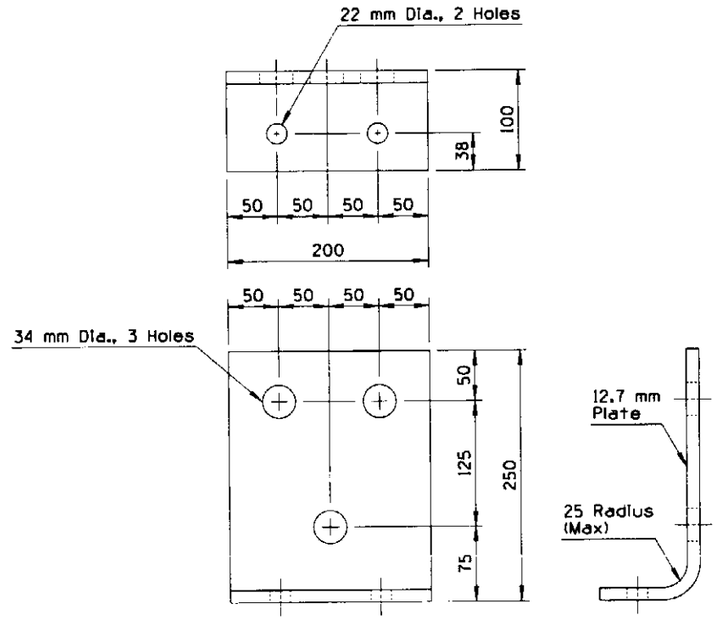

BRACKET DETAIL

BOLTED ANCHOR
TIMBER POST INSTALLATION DETAIL

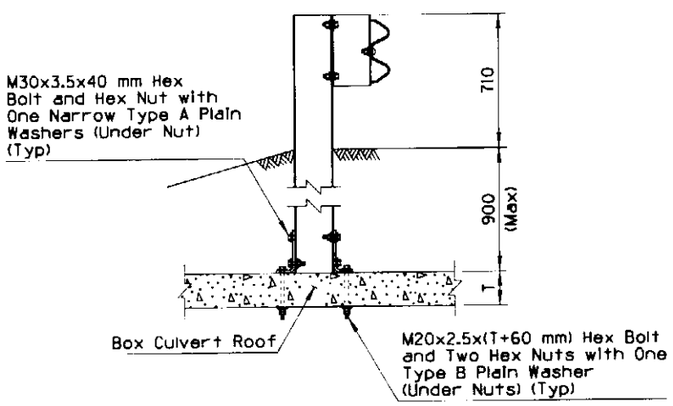

INSTALLATION DETAIL

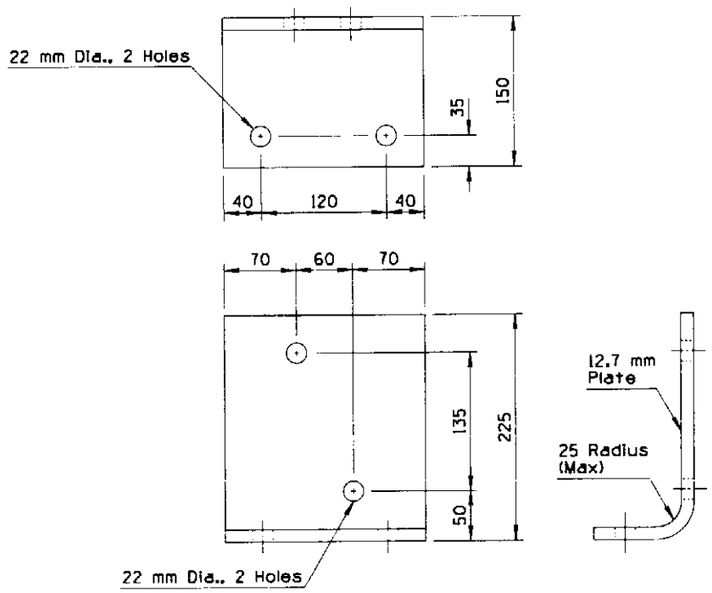

BRACKET DETAIL

BOLTED ANCHOR
STEEL POST INSTALLATION DETAIL

DESIGN APPROVED	STATE OF ARIZONA DEPARTMENT OF TRANSPORTATION DIVISION OF HIGHWAYS STANDARD DRAWINGS	ISSUE 6/95
APPROVED FOR DISTRIBUTION	BOLTED ANCHOR GUARD RAIL	DRAWING NO. C-10.29 Sheet 2 of 2

Metric

NO	DESCRIPTION OF REVISIONS	MADE BY	DATE
1			
2			
3			

Metric

GENERAL NOTES

● - Indicates ARTBA designation

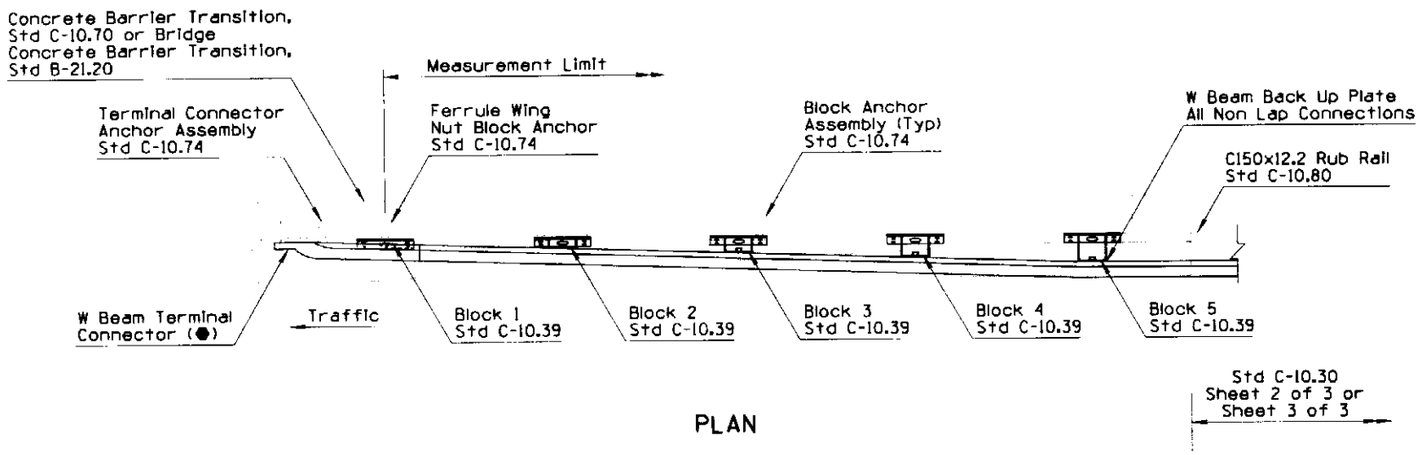

PLAN

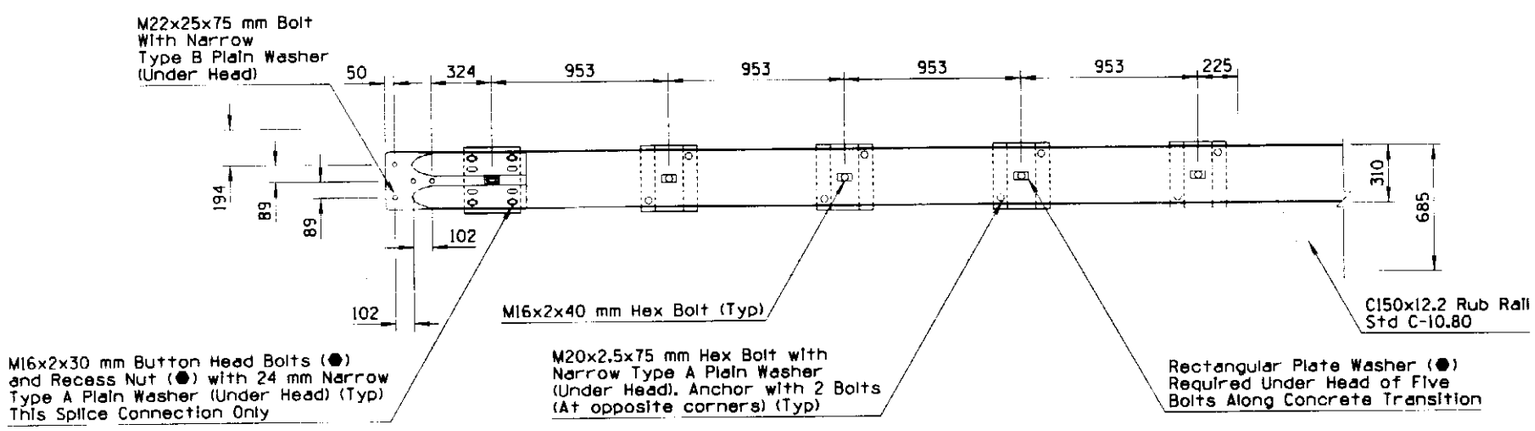

ELEVATION

Guard Rail Transition

Note:
For Notes and Dimensions Not Shown, See Guard Rail Transition Above

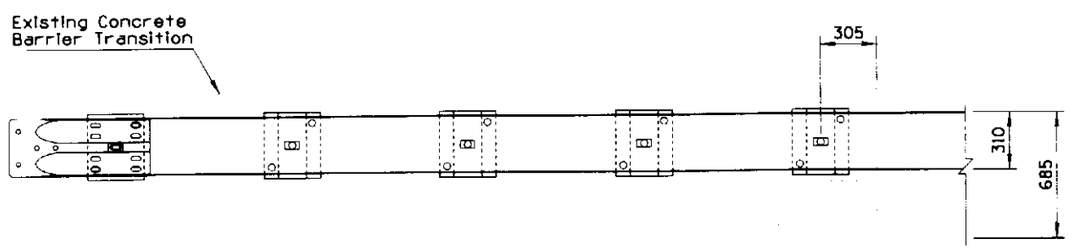

ELEVATION

Guard Rail Transition To Existing Concrete Barrier Transition

DESIGN APPROVED	STATE OF ARIZONA DEPARTMENT OF TRANSPORTATION DIVISION OF HIGHWAYS STANDARD DRAWINGS	ISSUE 6/95
APPROVED FOR DISTRIBUTION	GUARD RAIL TRANSITION W BEAM TO CONCRETE HALF BARRIER (APPROACH)	DRAWING NO. C-10.30 Sheet 1 of 3

Metric

NO	DESCRIPTION OF REVISIONS	MADE BY	DATE
1			
2			
3			
4			

Metric

GENERAL NOTES

● - Indicates ARTBA designation

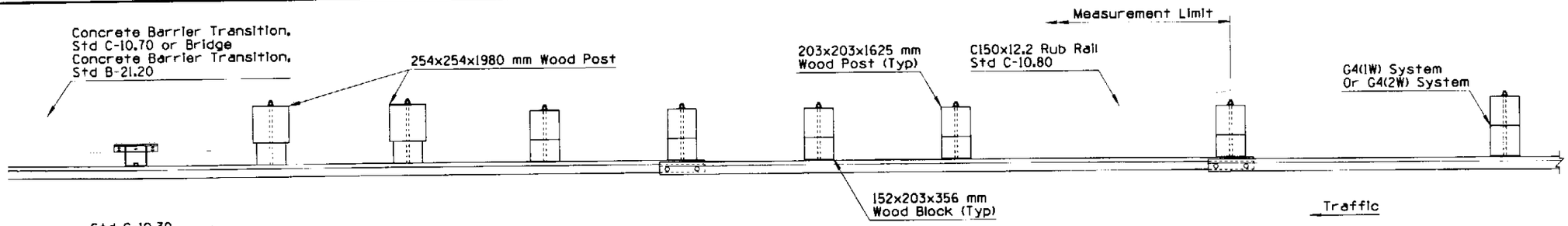

PLAN

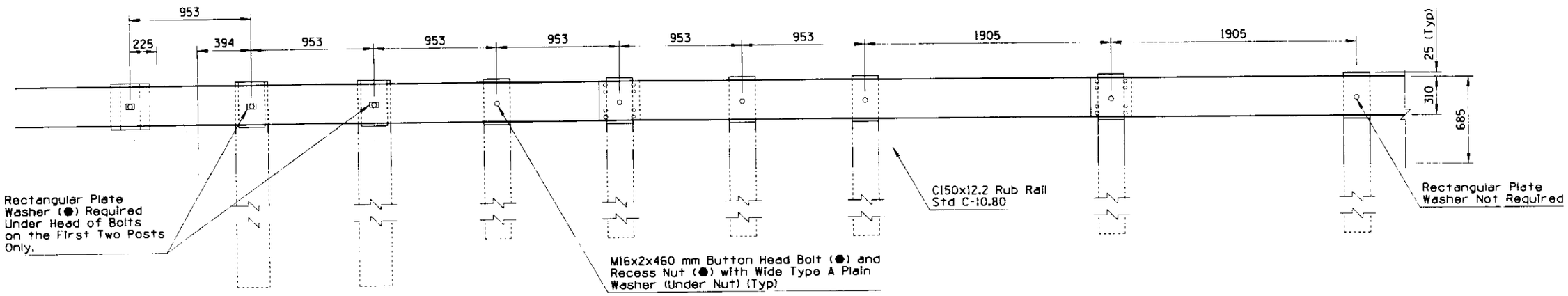

ELEVATION

Guard Rail Transition (Timber Post)

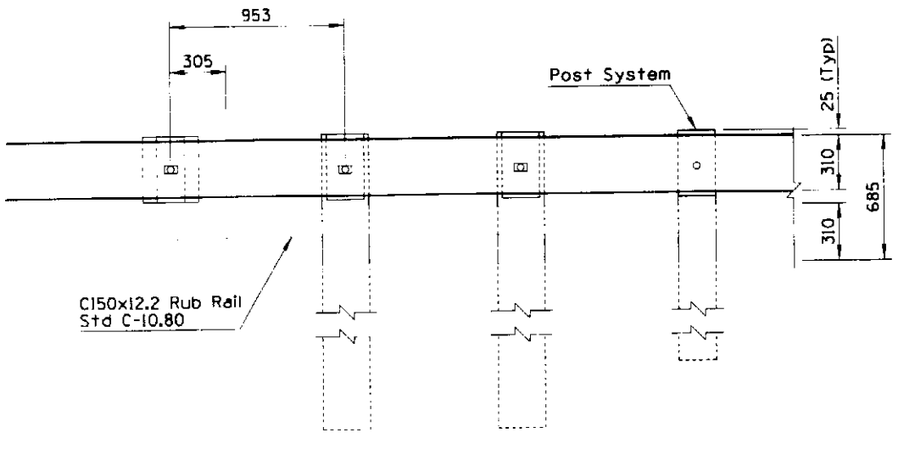

ELEVATION

Note:
For Notes and Dimensions Not Shown, See Guard Rail Transition Above.

Guard Rail Transition To Existing Concrete Barrier Transition

DESIGN APPROVED	STATE OF ARIZONA DEPARTMENT OF TRANSPORTATION DIVISION OF HIGHWAYS STANDARD DRAWINGS	ISSUE
Terry H Otterness		6/95
APPROVED FOR DISTRIBUTION Ronald Williams	GUARD RAIL TRANSITION W BEAM TO CONCRETE HALF BARRIER (APPROACH)	DRAWING NO. C-10.30 Sheet 2 of 3

Metric

NO	DESCRIPTION OF REVISIONS	MADE BY	DATE

Metric

GENERAL NOTES

● - indicates ARTBA designation

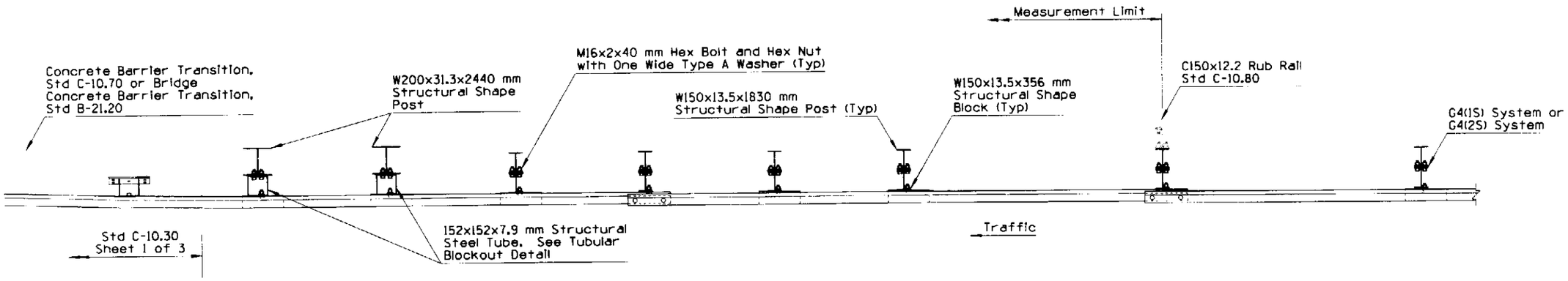

PLAN

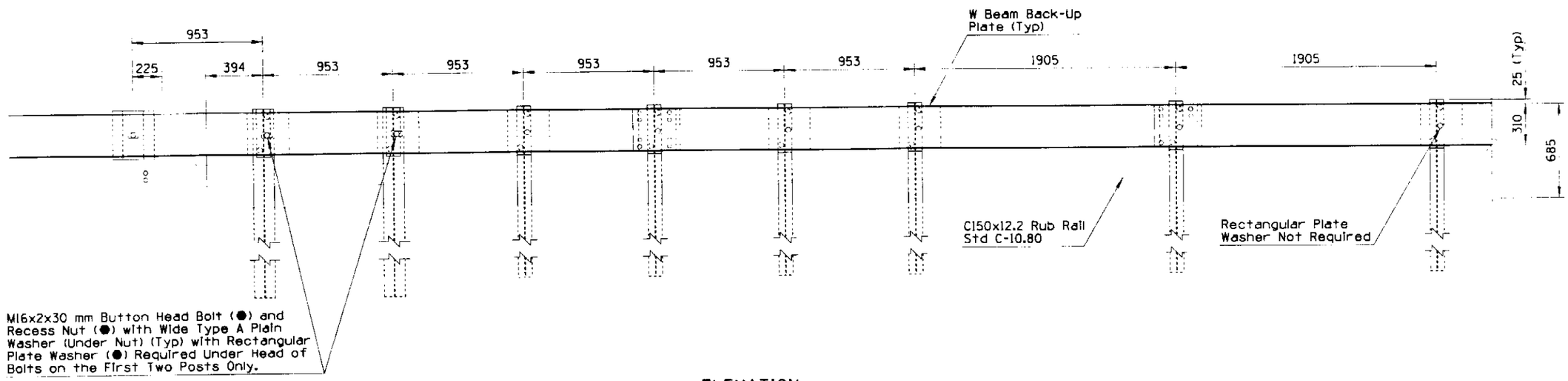

ELEVATION

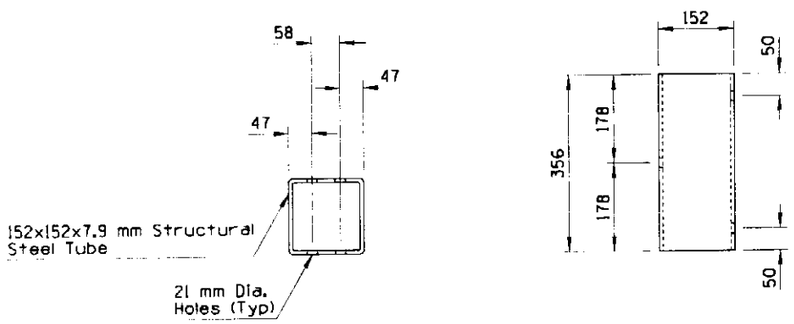

TUBULAR BLOCKOUT DETAIL

Guard Rail Transition (Steel Post)

DESIGN APPROVED	STATE OF ARIZONA DEPARTMENT OF TRANSPORTATION DIVISION OF HIGHWAYS STANDARD DRAWINGS	ISSUE 6/95
APPROVED FOR DISTRIBUTION	GUARD RAIL TRANSITION, W BEAM TO CONCRETE HALF BARRIER (APPROACH)	DRAWING NO. C-10.30 Sheet 3 of 3

Metric

NO	DESCRIPTION OF REVISIONS	MADE BY	DATE
1			
2			
3			
4			

Metric

GENERAL NOTES

● - Indicates ARTBA designation

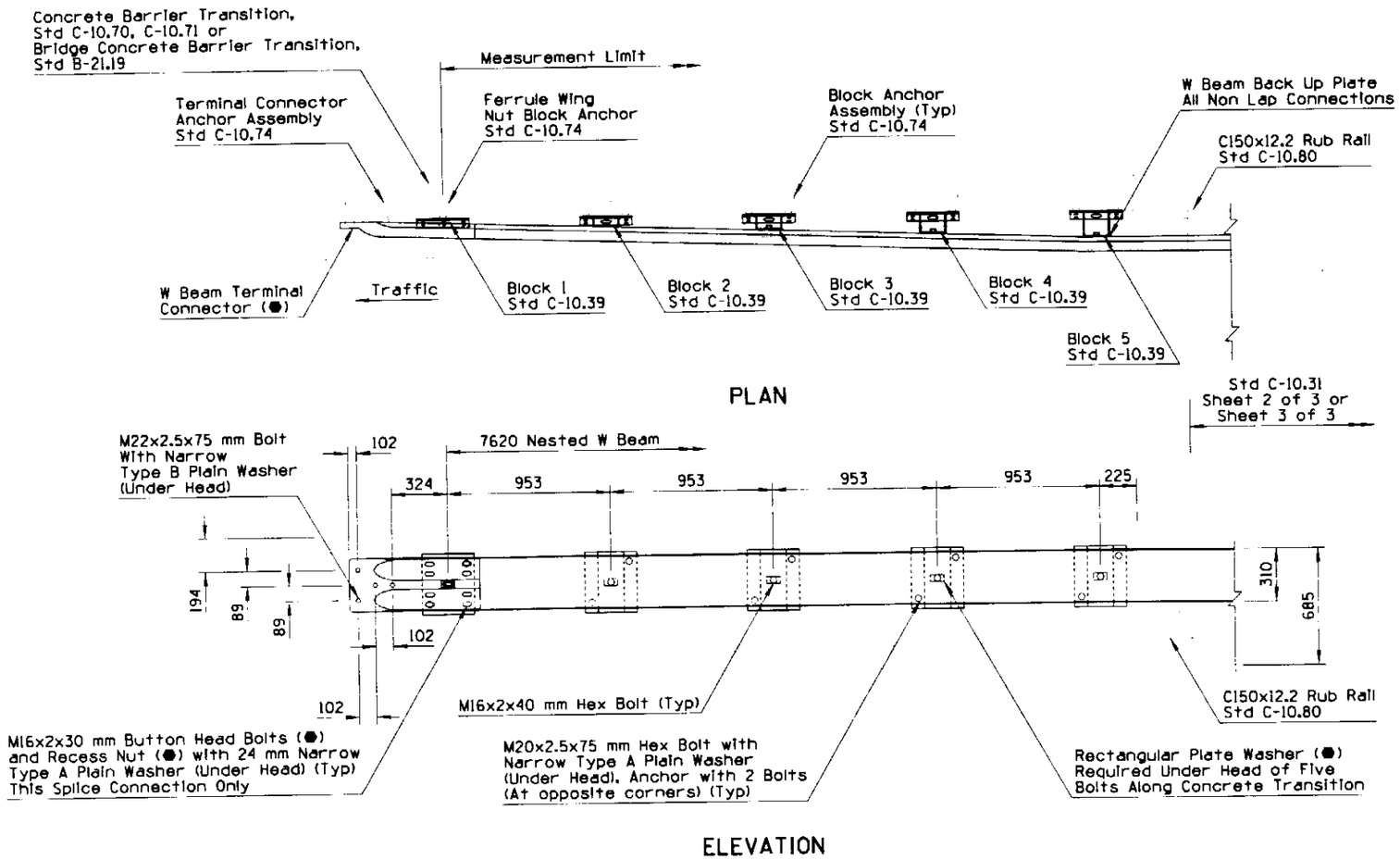

Guard Rail Transition

Note:
For Notes and Dimensions Not Shown, See Guard Rail Transition Above

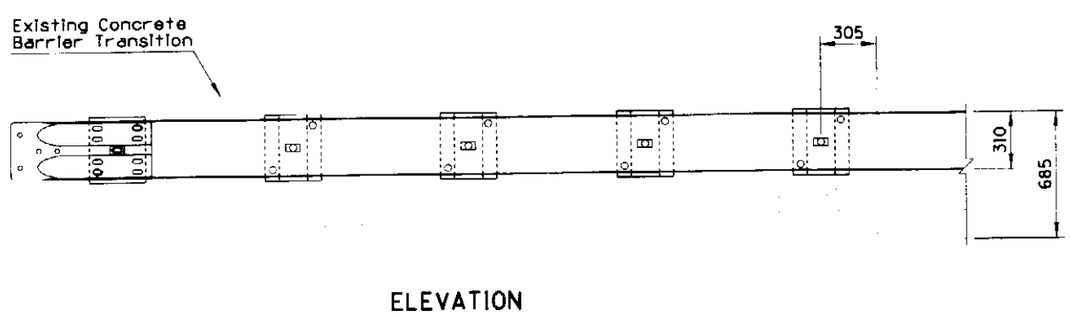

Guard Rail Transition To Existing Concrete Barrier Transition

DESIGN APPROVED Terry H. Otterness	STATE OF ARIZONA DEPARTMENT OF TRANSPORTATION DIVISION OF HIGHWAYS STANDARD DRAWINGS	ISSUE 6/95
APPROVED FOR DISTRIBUTION Ronald A. Williams	GUARD RAIL TRANSITION W BEAM TO CONCRETE HALF BARRIER (APPROACH)(WITH CURB)	DRAWING NO. C-10.31 Sheet 1 of 3

Metric

NO	DESCRIPTION OF REVISIONS	MADE BY	DATE
1			
2			
3			

Metric

GENERAL NOTES

● - Indicates ARTBA designation

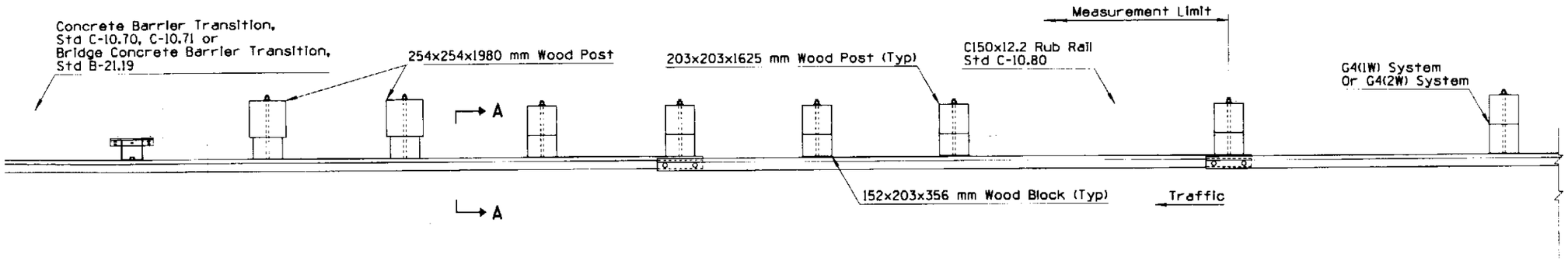

PLAN

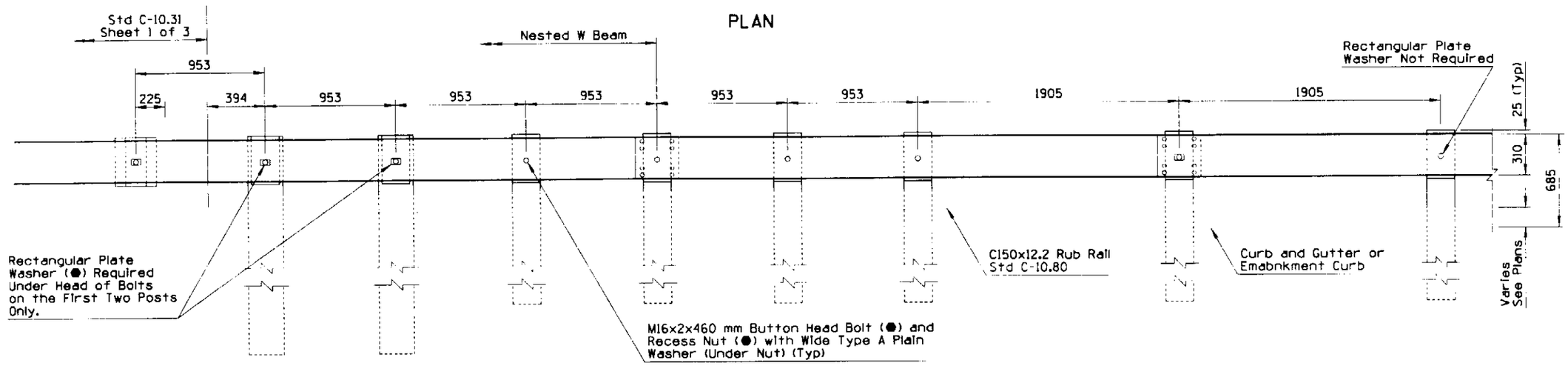

ELEVATION

Guard Rail Transition
(Timber Post)

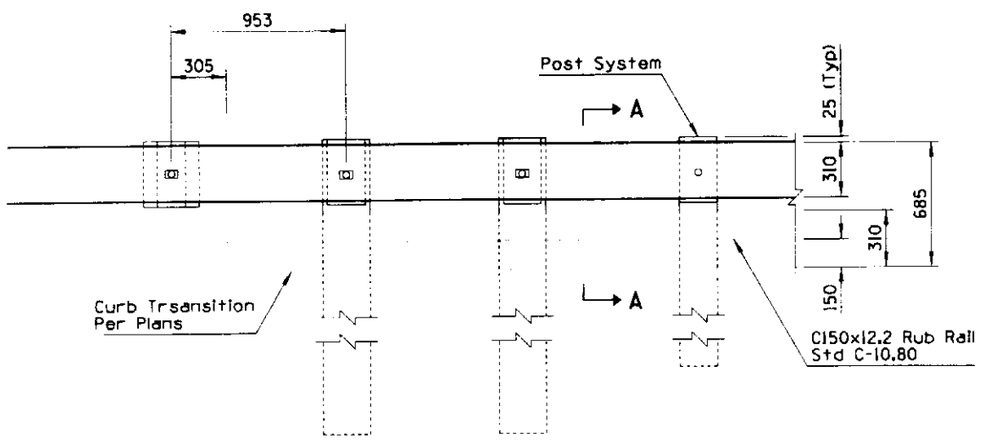

ELEVATION

Note:
For Notes and Dimensions Not Shown,
See Guard Rail Transition Above.

Guard Rail Transition
To Existing Concrete
Barrier Transition

Note:
Curb Height Shall Not Exceed 150 mm
When Adjacent to Rub Rail.

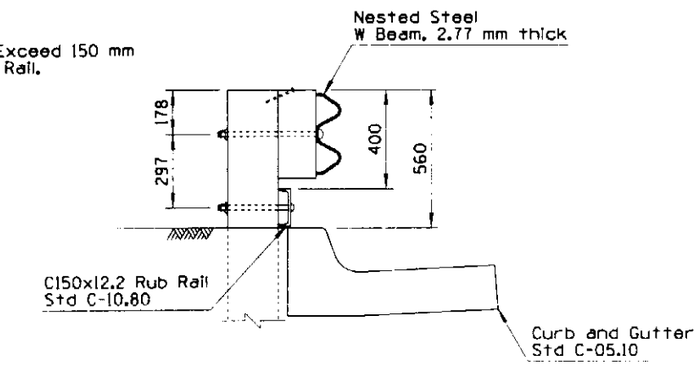

SECTION A-A

DESIGN APPROVED	STATE OF ARIZONA DEPARTMENT OF TRANSPORTATION DIVISION OF HIGHWAYS STANDARD DRAWINGS	ISSUE 6/95
APPROVED FOR DISTRIBUTION	GUARD RAIL TRANSITION W BEAM TO CONCRETE HALF BARRIER (APPROACH) (WITH CURB)	DRAWING NO. C-10.31 Sheet 2 of 3

Metric

DESCRIPTION OF REVISIONS	MADE BY	DATE

Metric

GENERAL NOTES

● - Indicates ARTBA designation

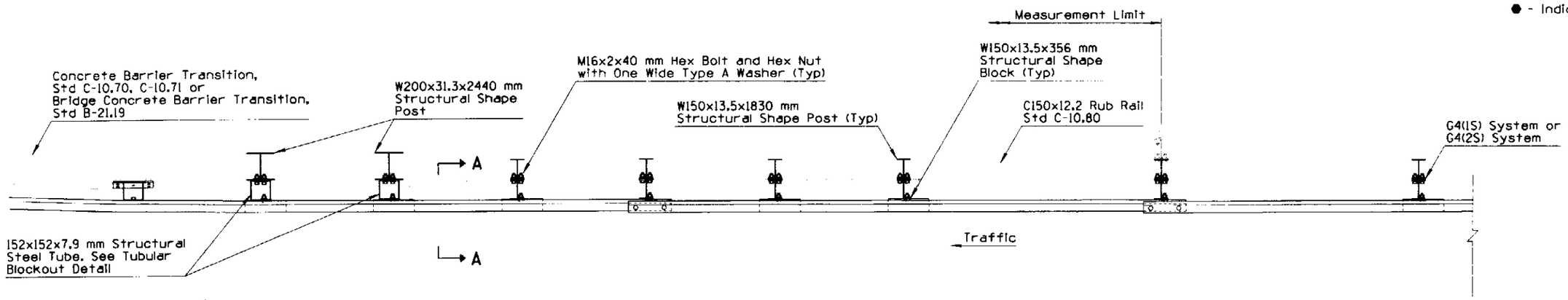

PLAN

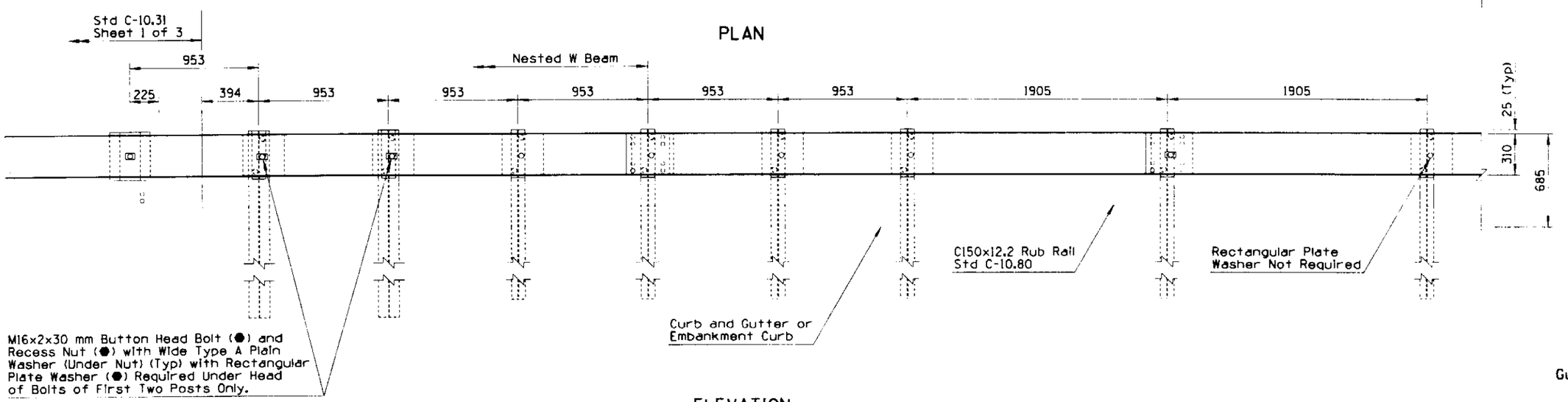

ELEVATION

Guard Rail Transition (Steel Post)

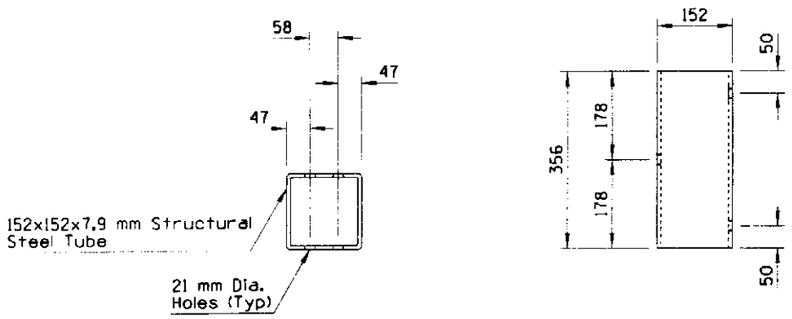

TUBULAR BLOCKOUT DETAIL

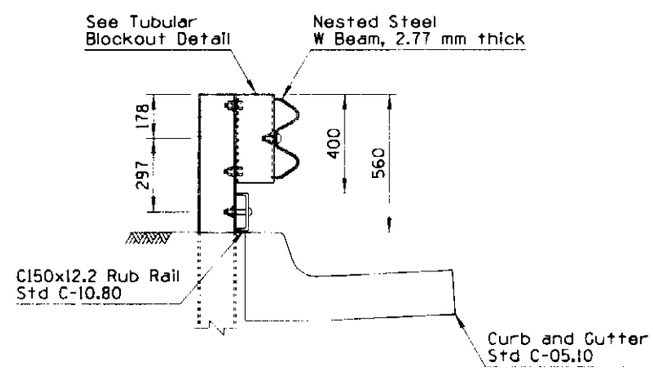

SECTION A-A

Note:
Curb Height Shall Not Exceed 150 mm When Adjacent to Rub Rail.

DESIGN APPROVED	STATE OF ARIZONA DEPARTMENT OF TRANSPORTATION DIVISION OF HIGHWAYS STANDARD DRAWINGS	ISSUE 6/95
APPROVED FOR DISTRIBUTION	GUARD RAIL TRANSITION, W BEAM TO CONCRETE HALF BARRIER (APPROACH) (WITH CURB)	DRAWING NO. C-10.31 Sheet 3 of 3

Metric

NO	DESCRIPTION OF REVISIONS	MADE BY	DATE
1			
2			
3			
4			

Metric

GENERAL NOTES

1. For use with one-way traffic or with two-way traffic outside the clear zone.

● - Indicates ARTBA designation

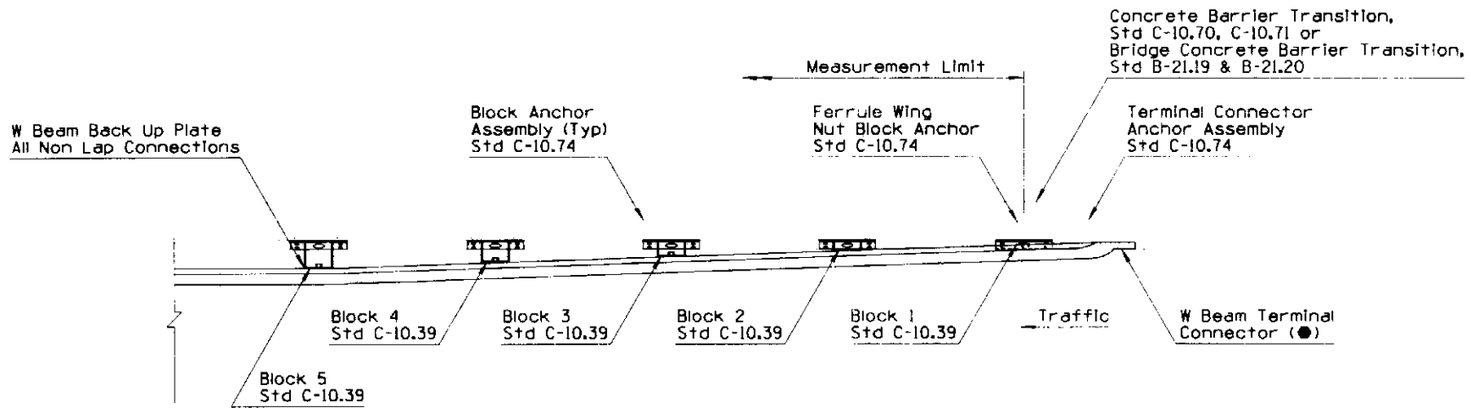

PLAN

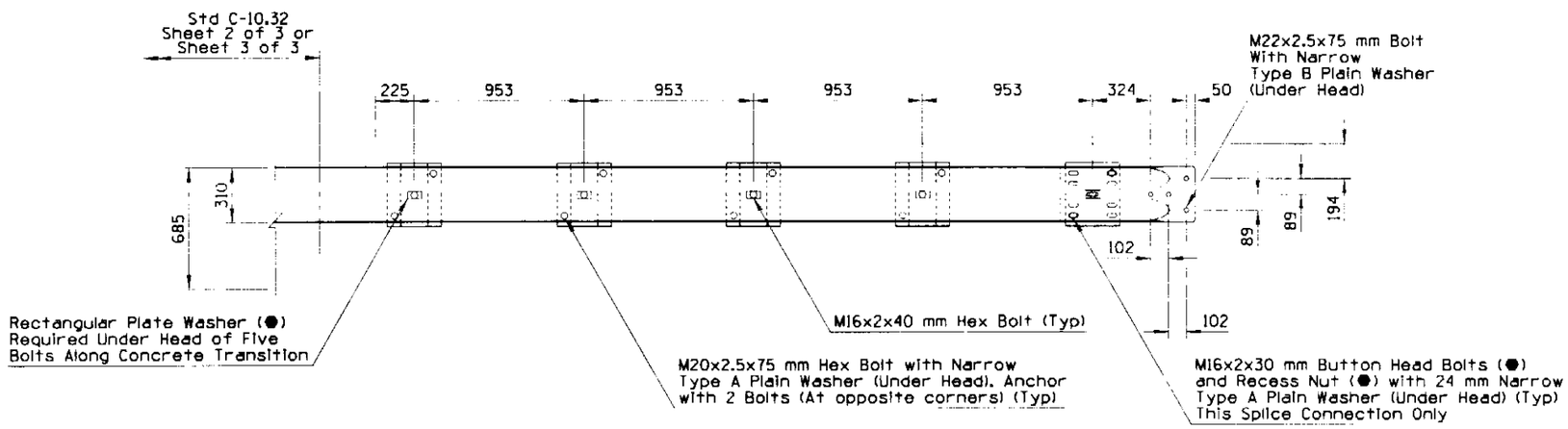

ELEVATION

Guard Rail Transition

Note:
For Notes and Dimensions Not Shown, See Guard Rail Transition Above

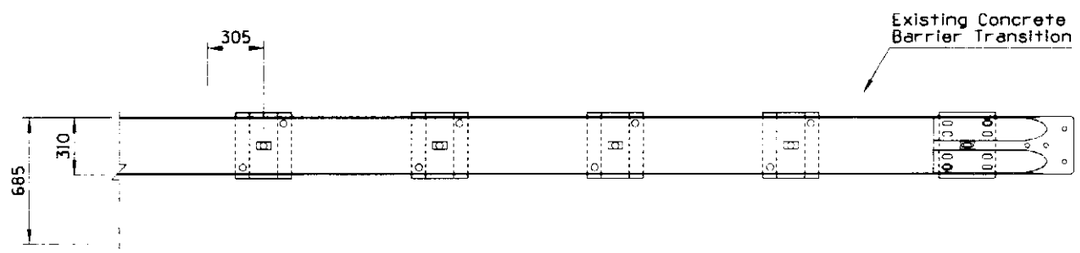

ELEVATION

Guard Rail Transition To Existing Concrete Barrier Transition

DESIGN APPROVED Jerry H Otteness	STATE OF ARIZONA DEPARTMENT OF TRANSPORTATION DIVISION OF HIGHWAYS STANDARD DRAWINGS	ISSUE 6/95
APPROVED FOR DISTRIBUTION Ronald Williams	GUARD RAIL TRANSITION W BEAM TO CONCRETE HALF BARRIER (DEPARTURE)	DRAWING NO. C-10.32 Sheet 1 of 3

Metric

	DESCRIPTION OF REVISIONS	MADE BY	DATE
6			
5			
4			
3			
2			
1			

Metric

GENERAL NOTES

● - Indicates ARTBA designation

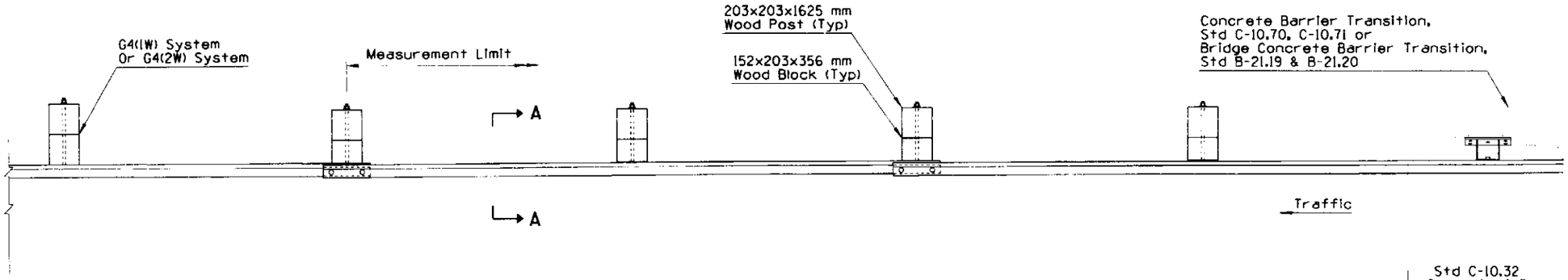

PLAN

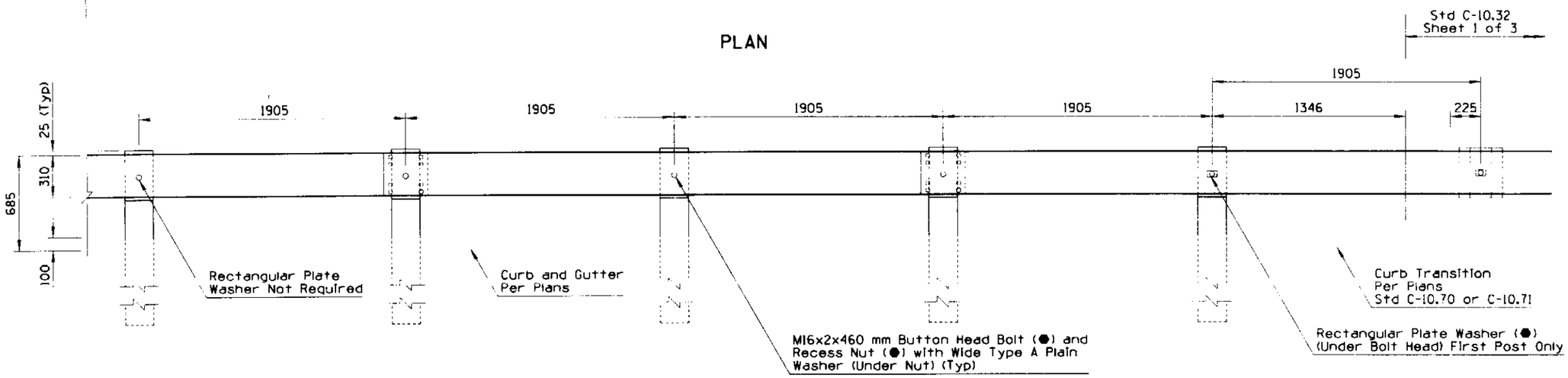

ELEVATION

Guard Rail Transition
(Timber Post)

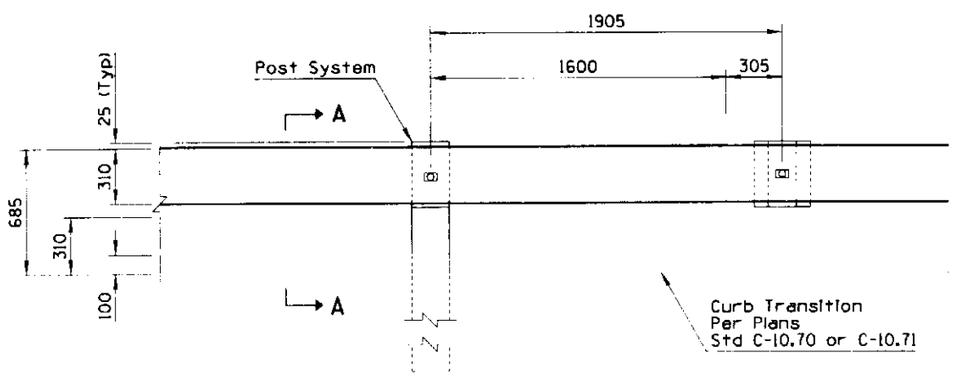

ELEVATION

Note:
For Notes and Dimensions Not Shown,
See Guard Rail Transition Above.

Guard Rail Transition
To Existing Concrete
Barrier Transition

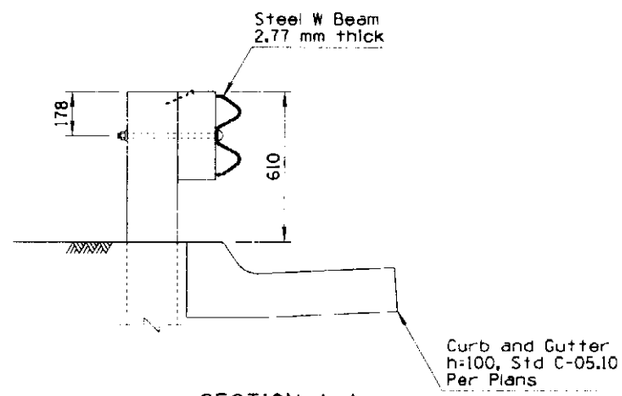

SECTION A-A

DESIGN APPROVED	STATE OF ARIZONA DEPARTMENT OF TRANSPORTATION DIVISION OF HIGHWAYS STANDARD DRAWINGS	ISSUE 6/95
APPROVED FOR DISTRIBUTION	GUARD RAIL TRANSITION W BEAM TO CONCRETE HALF BARRIER (DEPARTURE)	DRAWING NO. C-10.32 Sheet 2 of 3

Metric

NO	DESCRIPTION OF REVISIONS	MADE BY	DATE
1			
2			
3			
4			

Metric

GENERAL NOTES

● - Indicates ARTBA designation

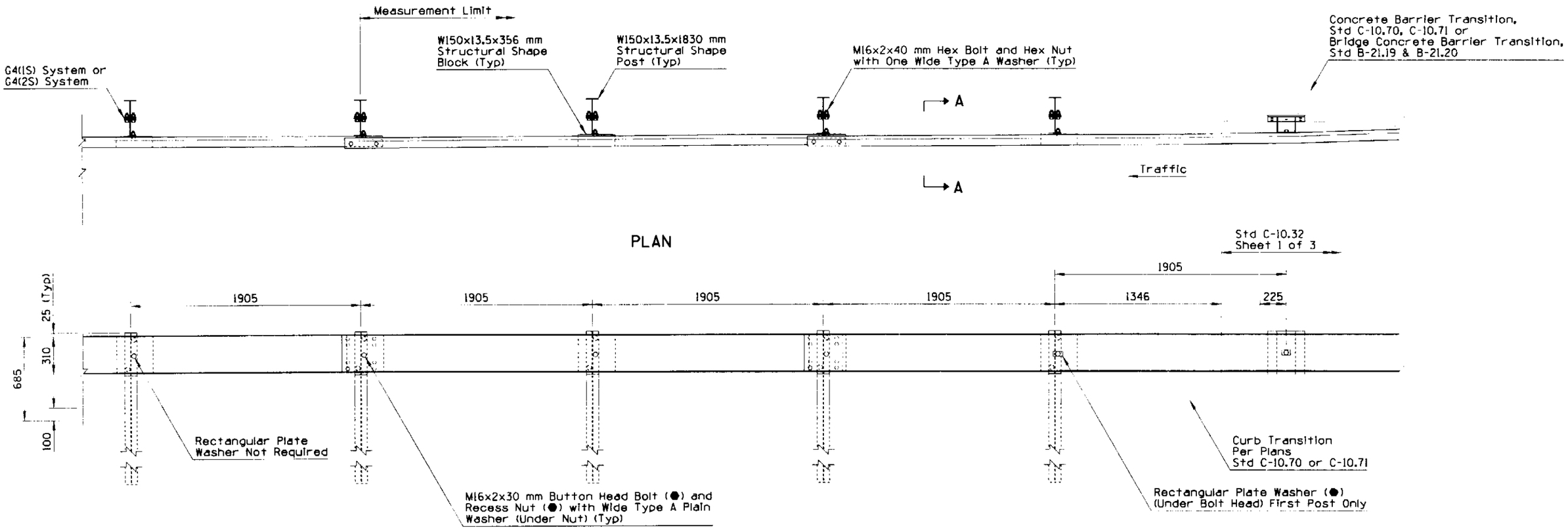

PLAN

ELEVATION

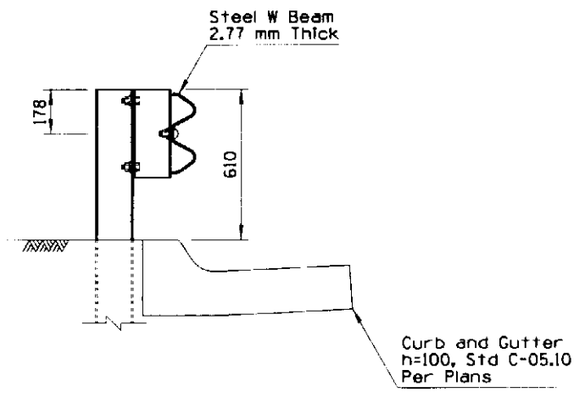

SECTION A-A

Guard Rail Transition (Steel Post)

DESIGN APPROVED	STATE OF ARIZONA DEPARTMENT OF TRANSPORTATION DIVISION OF HIGHWAYS STANDARD DRAWINGS	ISSUE 6/95
APPROVED FOR DISTRIBUTION	GUARD RAIL TRANSITION, W BEAM TO CONCRETE HALF BARRIER (DEPARTURE)	DRAWING NO. C-10.32 Sheet 3 of 3

Metric

NO.	DESCRIPTION OF REVISIONS	MADE BY	DATE
1			
2			
3			
4			
5			

Metric

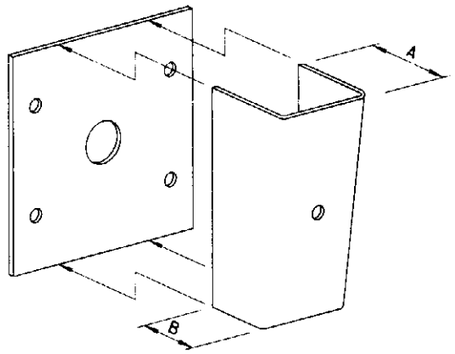

BLOCK	DIMENSION	
	A	B
2	32	22
3	63	44
4	94	66
5	125	87

Note:
Block 1 is a 310x356x6.4 mm Plate

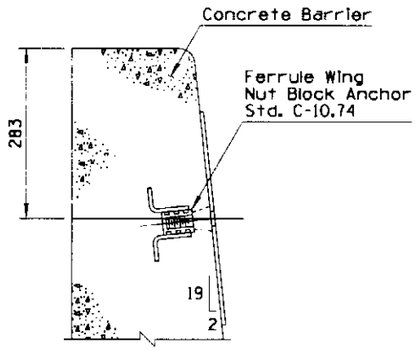

HALF BARRIER
(BLOCK 1 SHOWN)

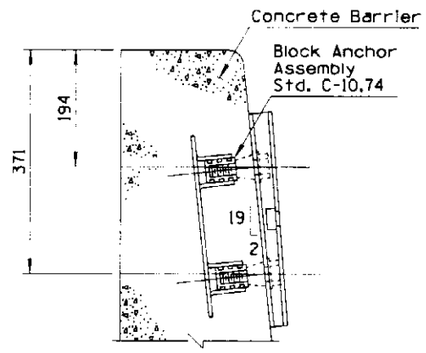

HALF BARRIER
(BLOCK 2 SHOWN)

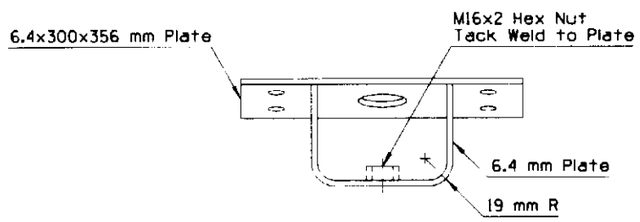

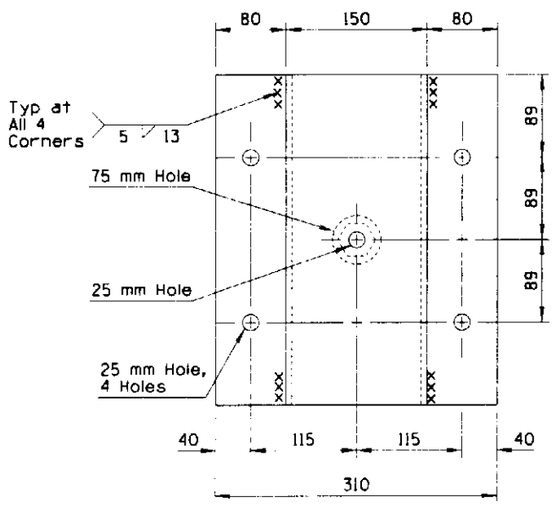

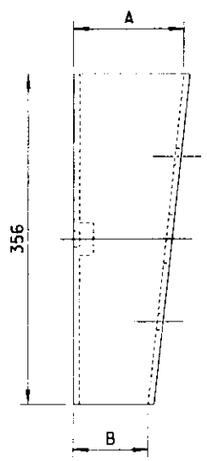

Blocks 2,3,4 and 5

BLOCK DETAILS

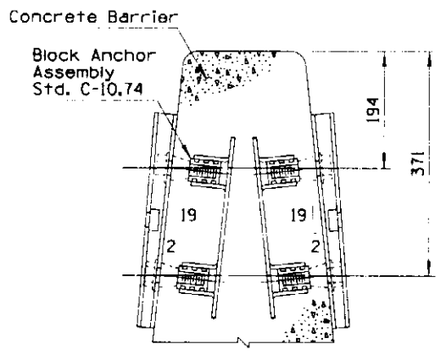

MEDIAN BARRIER
(BLOCK 2 SHOWN)

BLOCK AND ANCHORAGE DETAILS

DESIGN APPROVED Gerald H. Ottmar	STATE OF ARIZONA DEPARTMENT OF TRANSPORTATION DIVISION OF HIGHWAYS STANDARD DRAWINGS	ISSUE 6/95
APPROVED FOR DISTRIBUTION Ronald A. Williams	HARDWARE FOR W BEAM TRANSITION TO CONCRETE BARRIER	DRAWING NO. C-10.39

Metric

NO	DESCRIPTION OF REVISIONS	MADE BY	DATE

Metric

GENERAL NOTES

1. See Std C-10.44 for additional information.

● - Indicates ARTBA designation

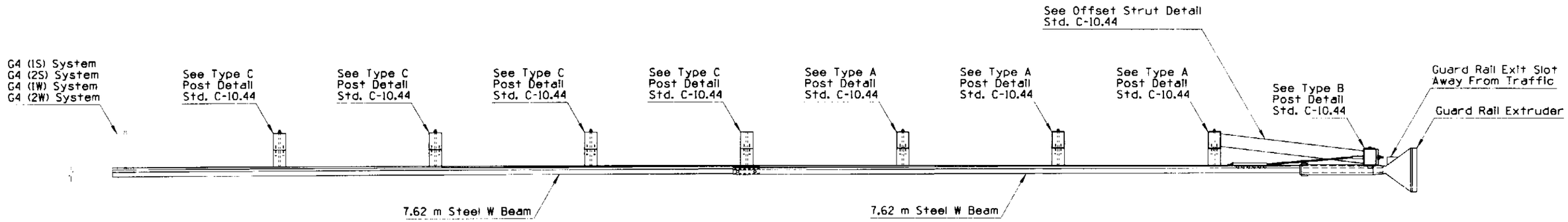

PLAN

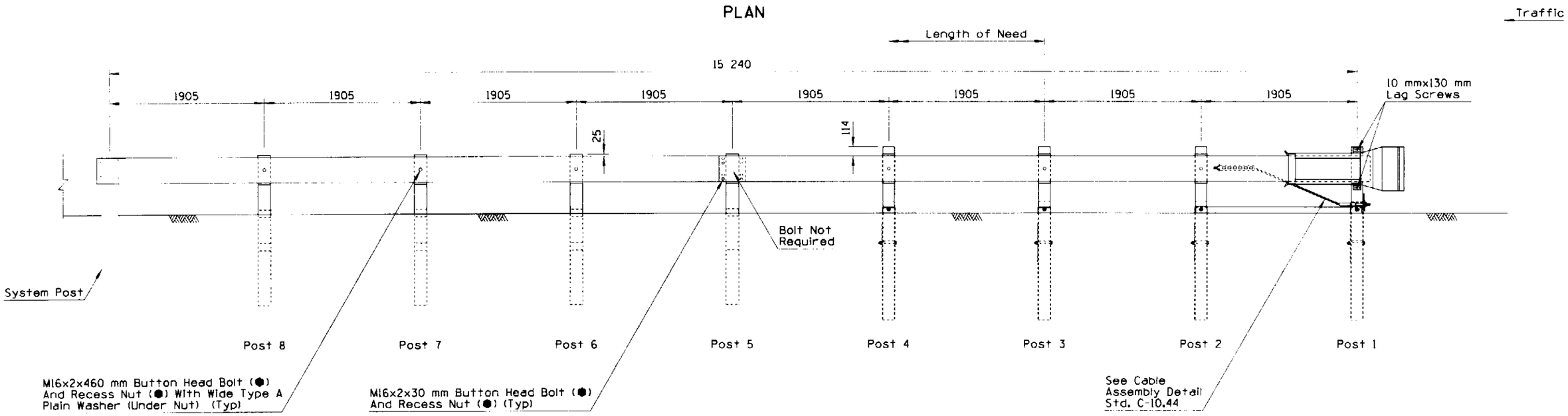

ELEVATION

DESIGN APPROVED Terry H. Otterness	STATE OF ARIZONA DEPARTMENT OF TRANSPORTATION DIVISION OF HIGHWAYS STANDARD DRAWINGS	ISSUE 6/95
APPROVED FOR DISTRIBUTION Ronald A. Williams	GUARD RAIL EXTRUDER TERMINAL GET-1	DRAWING NO. C-10.40 Sheet 1 of 2

Metric

NO	DESCRIPTION OF REVISIONS	MADE BY	DATE

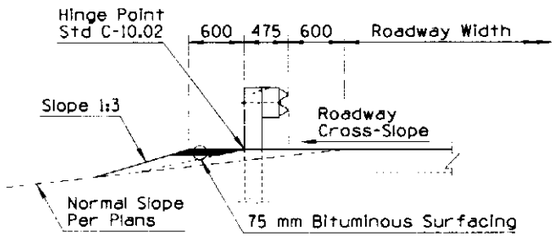

SECTION

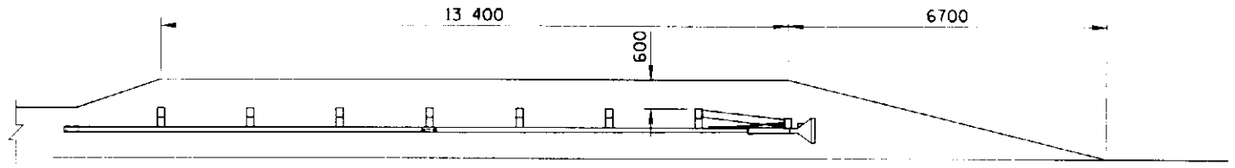

PLAN

TYPE B GUARD RAIL INSTALLATION

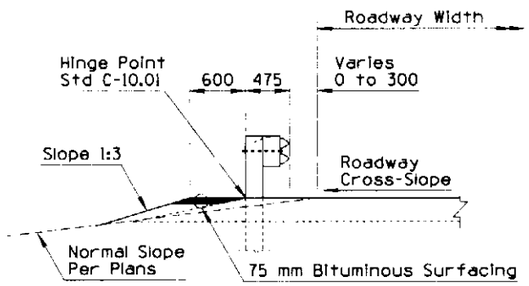

SECTION

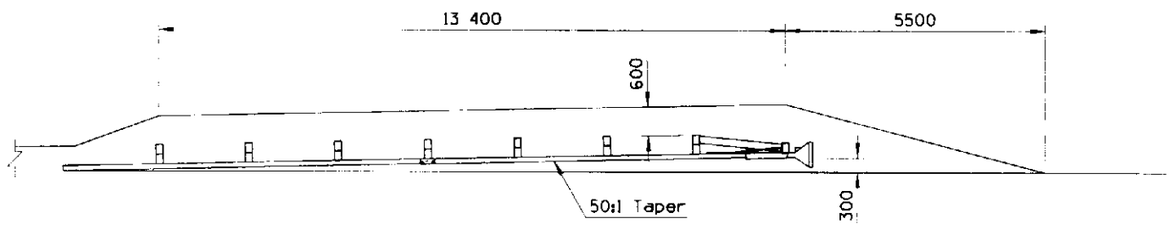

PLAN

TYPE A GUARD RAIL INSTALLATION

DESIGN APPROVED Terry H Otterness	STATE OF ARIZONA DEPARTMENT OF TRANSPORTATION DIVISION OF HIGHWAYS STANDARD DRAWINGS	ISSUE 6/95
APPROVED FOR DISTRIBUTION Ronald Williams	GUARD RAIL EXTRUDER TERMINAL GET-1	DRAWING NO. C-10.40 Sheet 2 of 2

NO.	DESCRIPTION OF REVISIONS	MADE BY	DATE

Metric

GENERAL NOTES

1. See Std C-10.44 for additional information.

● - Indicates ARTBA designation

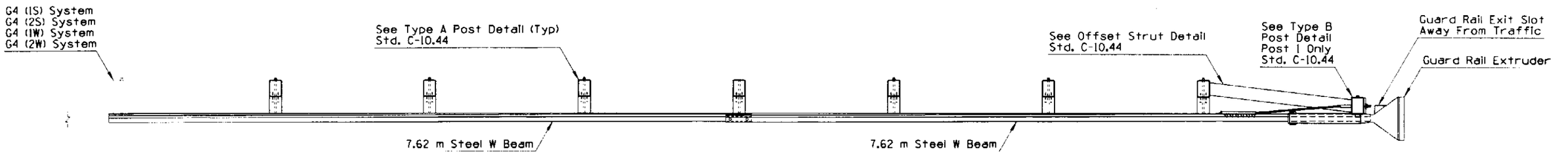

PLAN

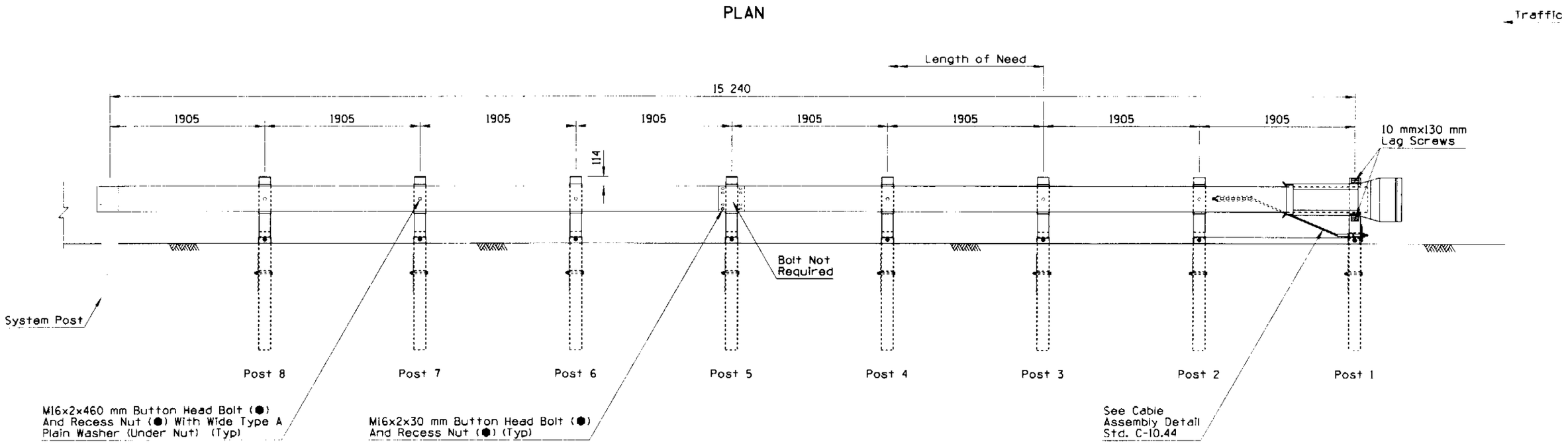

ELEVATION

DESIGN APPROVED	STATE OF ARIZONA DEPARTMENT OF TRANSPORTATION DIVISION OF HIGHWAYS STANDARD DRAWINGS	ISSUE
Terry H. Otterness		6/95
APPROVED FOR DISTRIBUTION Ronald A. Williams	GUARD RAIL EXTRUDER TERMINAL WITH CURB AND GUTTER GET-2	DRAWING NO. C-10.41 Sheet 1 of 2

Metric

NO	DESCRIPTION OF REVISIONS	MADE BY	DATE

Metric

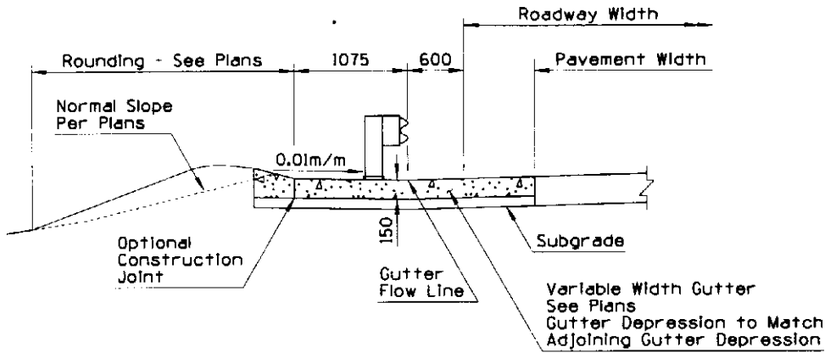

SECTION

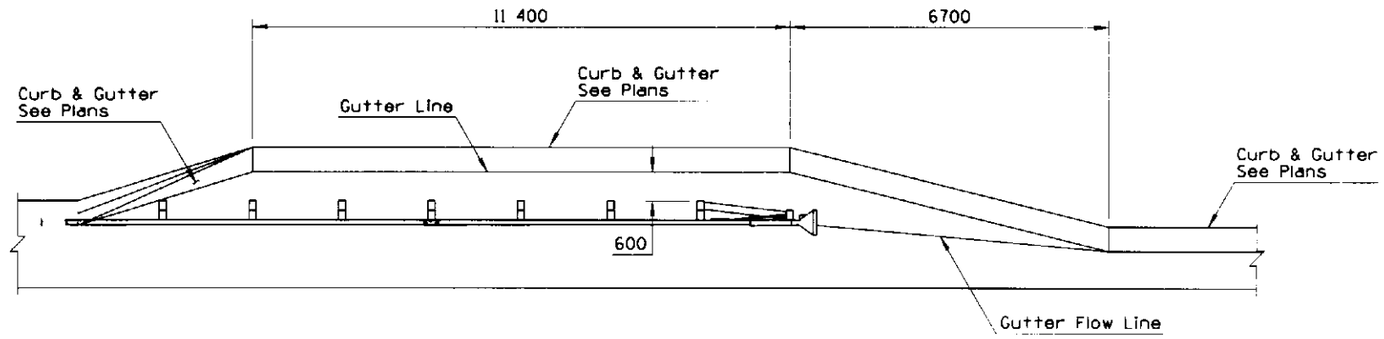

PLAN

TYPE B GUARD RAIL INSTALLATION

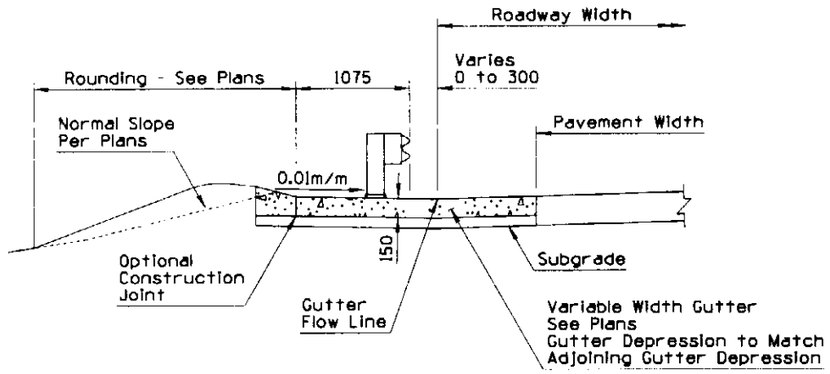

SECTION

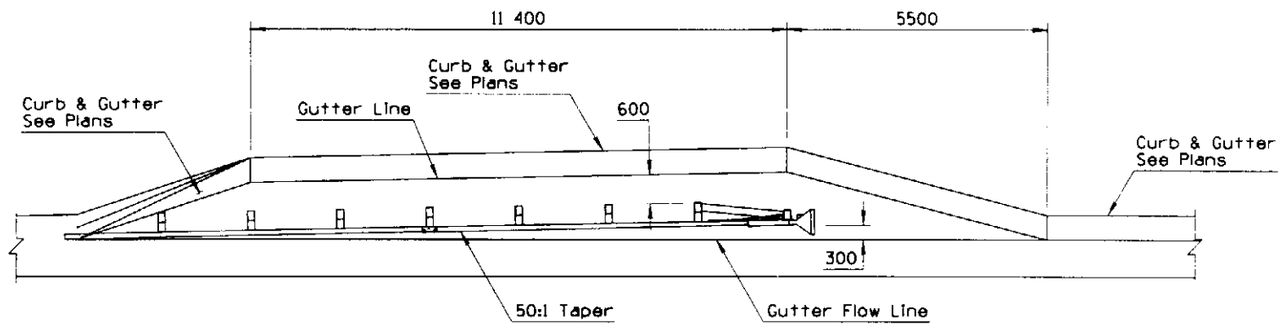

PLAN

TYPE A GUARD RAIL INSTALLATION

DESIGN APPROVED Terry H. Otterness	STATE OF ARIZONA DEPARTMENT OF TRANSPORTATION DIVISION OF HIGHWAYS STANDARD DRAWINGS	ISSUE 6/95
APPROVED FOR DISTRIBUTION Ronald Williams	GUARD RAIL EXTRUDER TERMINAL WITH CURB AND GUTTER GET-2	DRAWING NO. C-10.41 Sheet 2 of 2

Metric

NO.	DESCRIPTION OF REVISIONS	MADE BY	DATE
1			
2			
3			

Metric

GENERAL NOTES

1. Soil plates, steel tubes, offset strut, yokes, bearing plate and pipe sleeve shall be fabricated from structural steel ASTM A 36/A 36M.

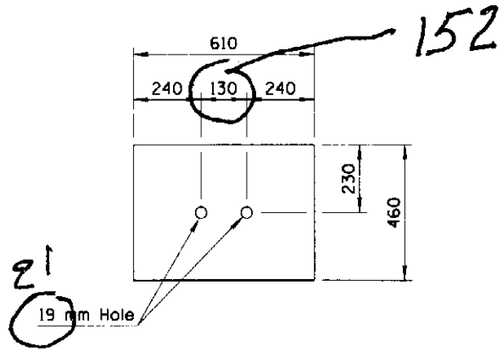

460x610x6.4 mm
SOIL PLATE DETAIL

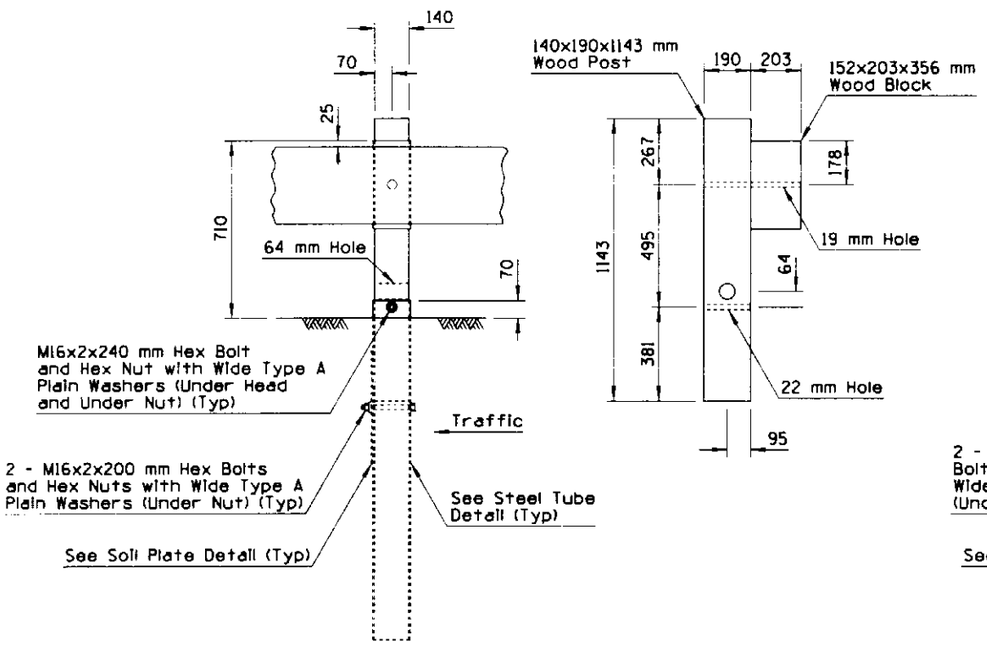

TYPE A POST DETAIL

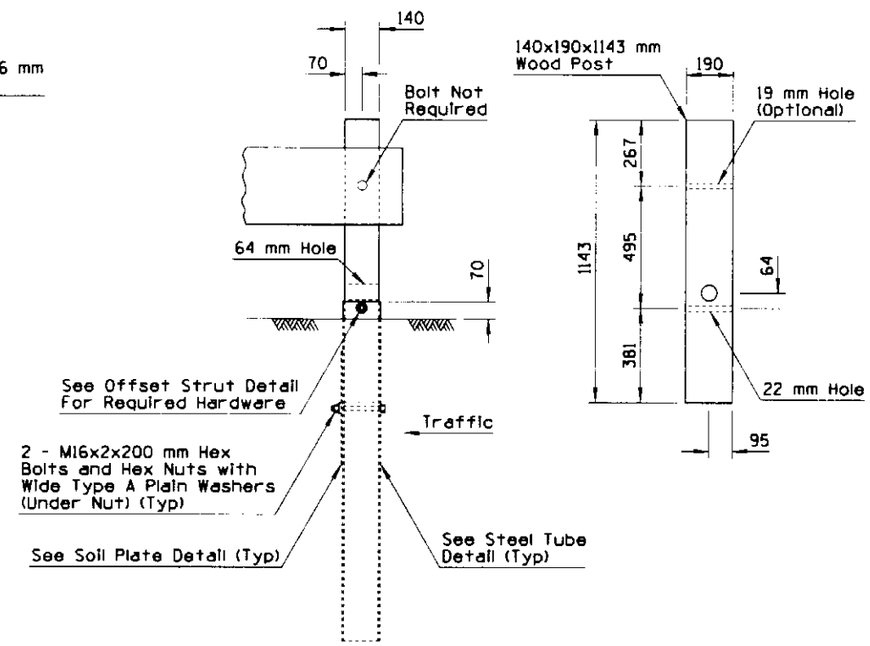

TYPE B POST DETAIL

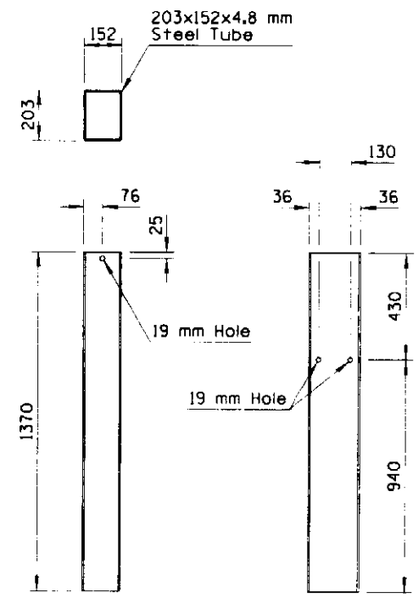

STEEL TUBE DETAIL

DESIGN APPROVED	STATE OF ARIZONA DEPARTMENT OF TRANSPORTATION DIVISION OF HIGHWAYS STANDARD DRAWINGS	ISSUE 6/95
APPROVED FOR DISTRIBUTION	HARDWARE FOR GUARD RAIL EXTRUDER TERMINAL	DRAWING NO. C-10.44 Sheet 1 of 3

Metric

NO.	DESCRIPTION OF REVISIONS	MADE BY	DATE
1			
2			
3			
4			

Metric

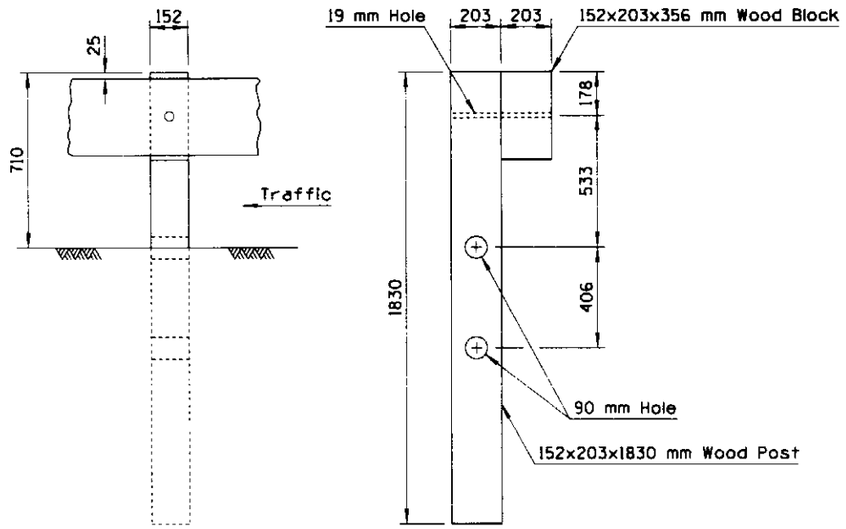

TYPE C POST DETAIL

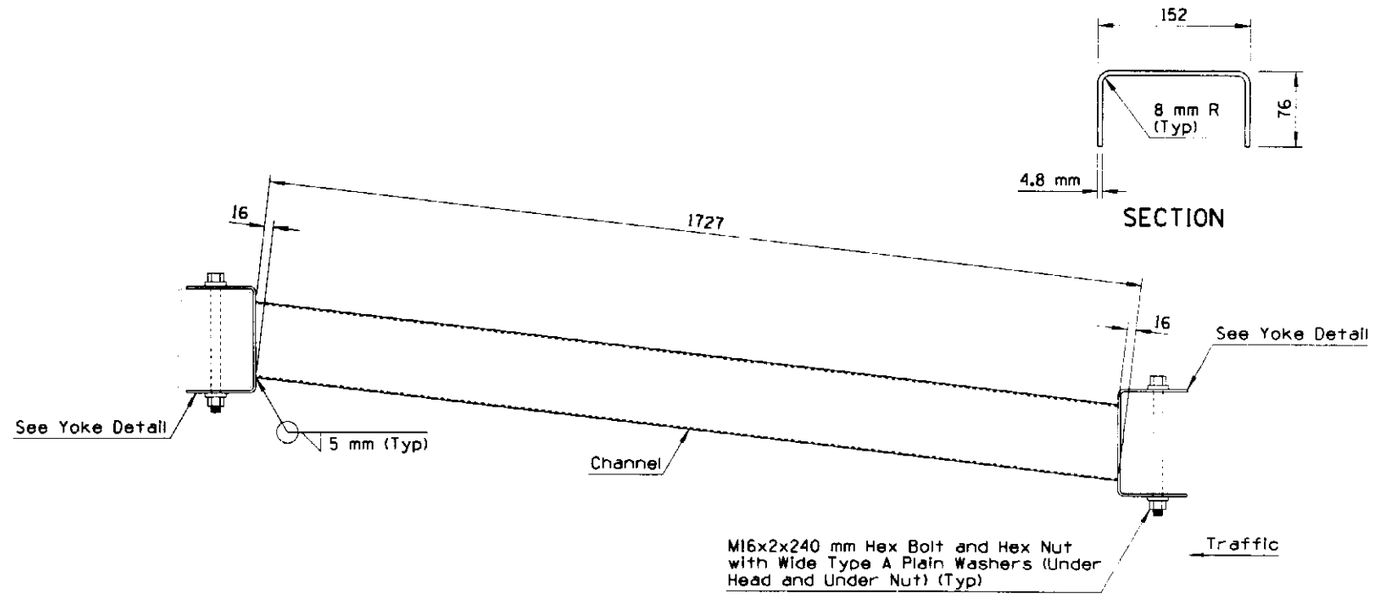

OFFSET STRUT DETAIL

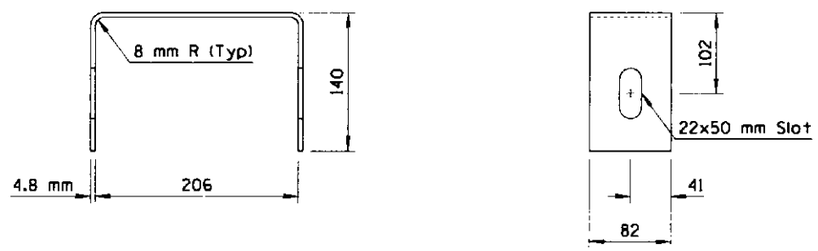

YOKE DETAIL

DESIGN APPROVED	STATE OF ARIZONA DEPARTMENT OF TRANSPORTATION DIVISION OF HIGHWAYS STANDARD DRAWINGS	ISSUE 6/95
APPROVED FOR DISTRIBUTION	HARDWARE FOR GUARD RAIL EXTRUDER TERMINAL	DRAWING NO. C-10.44 Sheet 2 of 3

Metric

NO	DESCRIPTION OF REVISIONS	MADE BY	DATE
1			
2			
3			
4			

Metric

GENERAL NOTES

1. The cable assembly shall be tightened to remove slack.

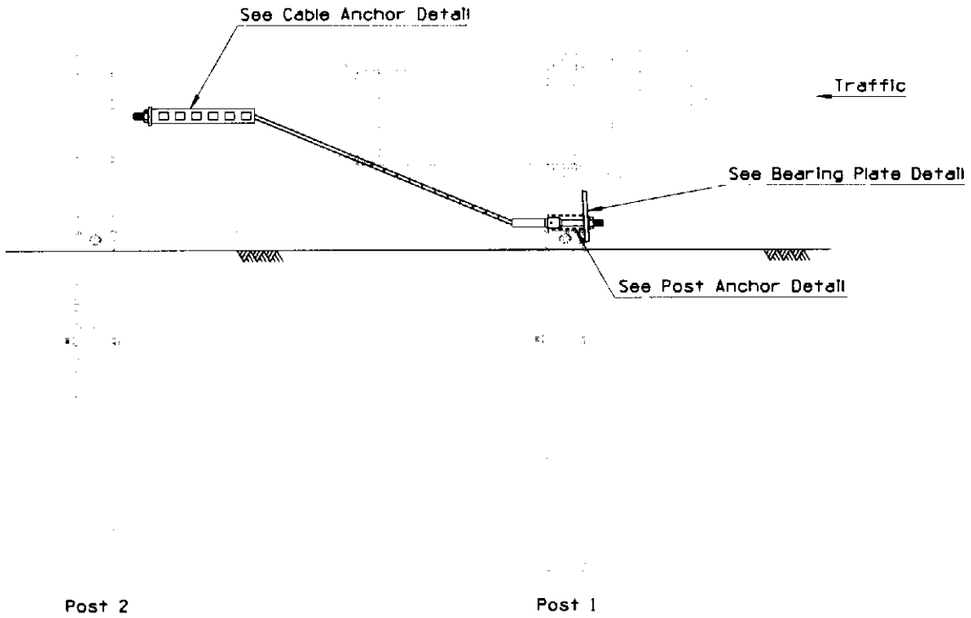

ELEVATION

CABLE ASSEMBLY DETAIL

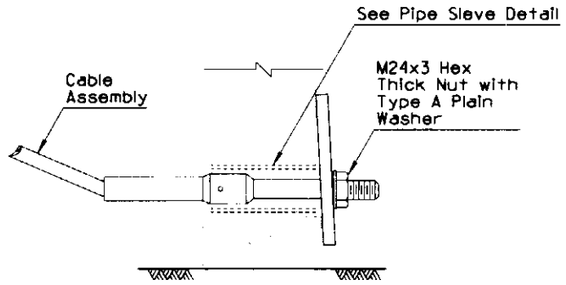

POST ANCHOR DETAIL

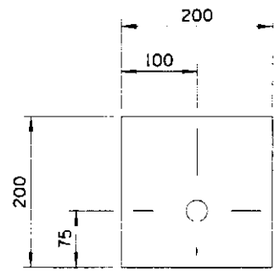

200x200x15.9 mm
BEARING PLATE DETAIL

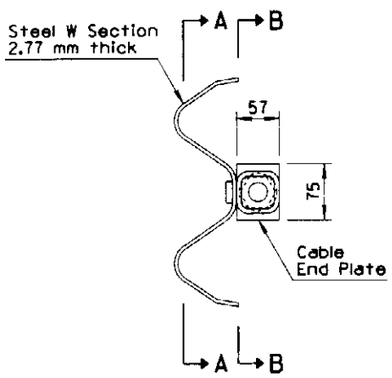

SIDE VIEW

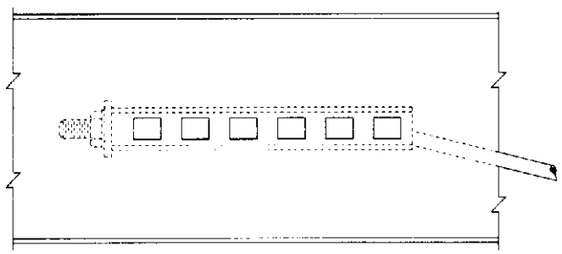

SECTION A-A

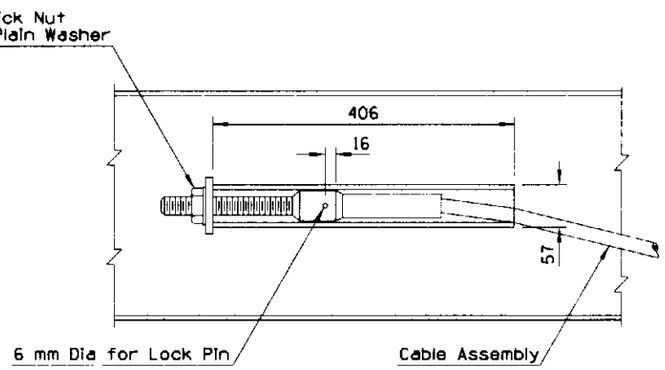

SECTION B-B

CABLE ANCHOR DETAIL

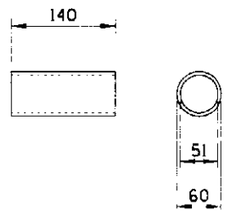

PIPE SLEEVE DETAIL

DESIGN APPROVED Terry H. Otterness	STATE OF ARIZONA DEPARTMENT OF TRANSPORTATION DIVISION OF HIGHWAYS STANDARD DRAWINGS	ISSUE 6/95
APPROVED FOR DISTRIBUTION Ronald C. Williams	HARDWARE FOR GUARD RAIL EXTRUDER TERMINAL	DRAWING NO. C-10.44 Sheet 3 of 3

Metric

NO.	DESCRIPTION OF REVISIONS	MADE BY	DATE
1			
2			
3			
4			

Metric

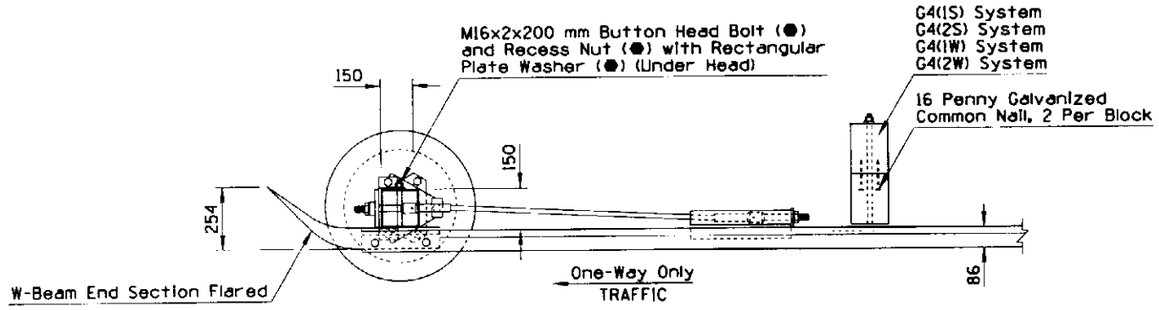

PLAN

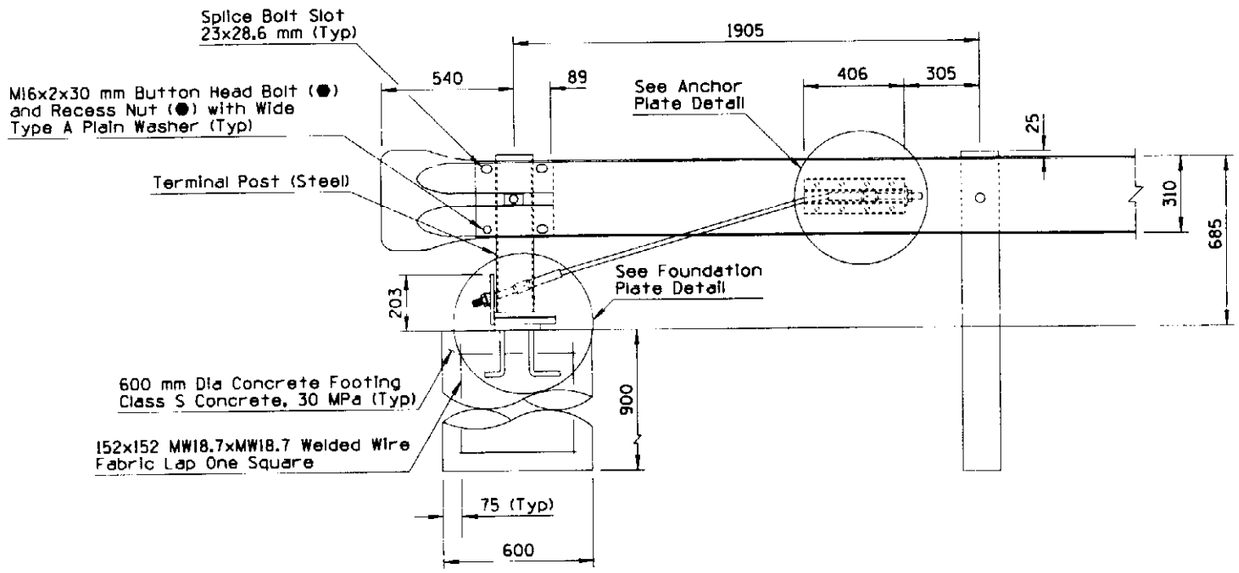

ELEVATION

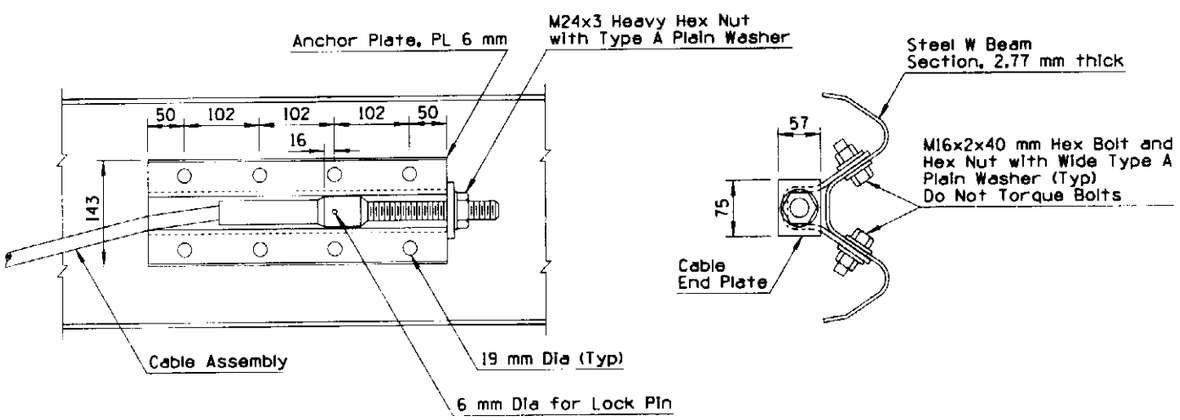

FRONT VIEW

SIDE VIEW

ANCHOR PLATE DETAIL

GENERAL NOTES

1. The cable assembly shall be tightened to remove slack.
2. M16x2x80 mm heavy hex bolts, connecting the anchor terminal post and foundation plates, shall be torqued to 230 N·m.
3. To ensure that the bearing plate remains in position, one wrap of galvanized steel wire, 1.6 mm thick, shall be wrapped around the terminal post near the top of the plate.
4. See Std. C-10.03 for measurement limits.

● - Indicates ARTBA designation

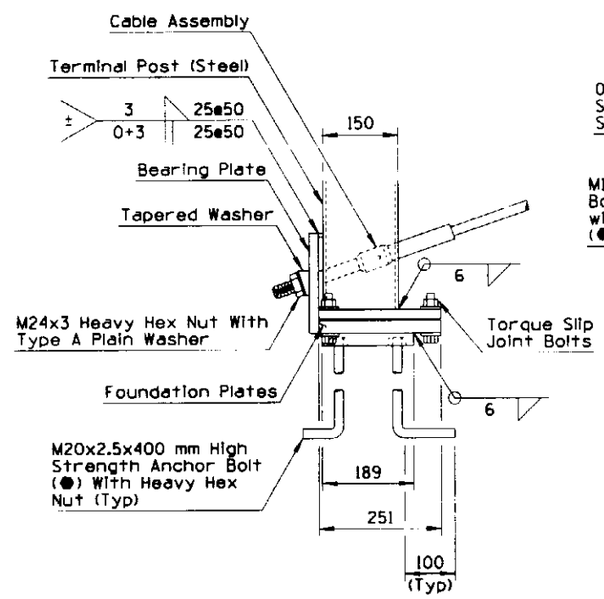

FRONT VIEW

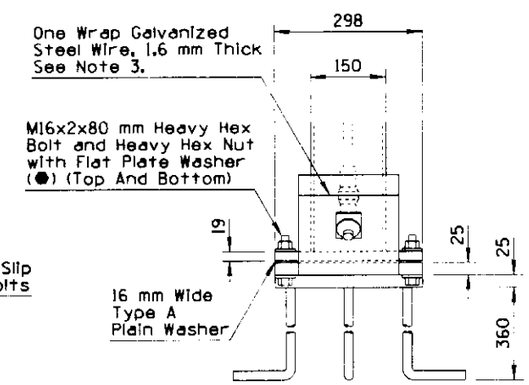

SIDE VIEW

FOUNDATION PLATE DETAIL

DESIGN APPROVED	STATE OF ARIZONA DEPARTMENT OF TRANSPORTATION DIVISION OF HIGHWAYS STANDARD DRAWINGS	ISSUE 6/95
APPROVED FOR DISTRIBUTION	GUARDRAIL ANCHOR ASSEMBLY STEEL TERMINAL POST	DRAWING NO. C-10.45

Metric

NO	DESCRIPTION OF REVISIONS	MADE BY	DATE
1			
2			
3			

Metric

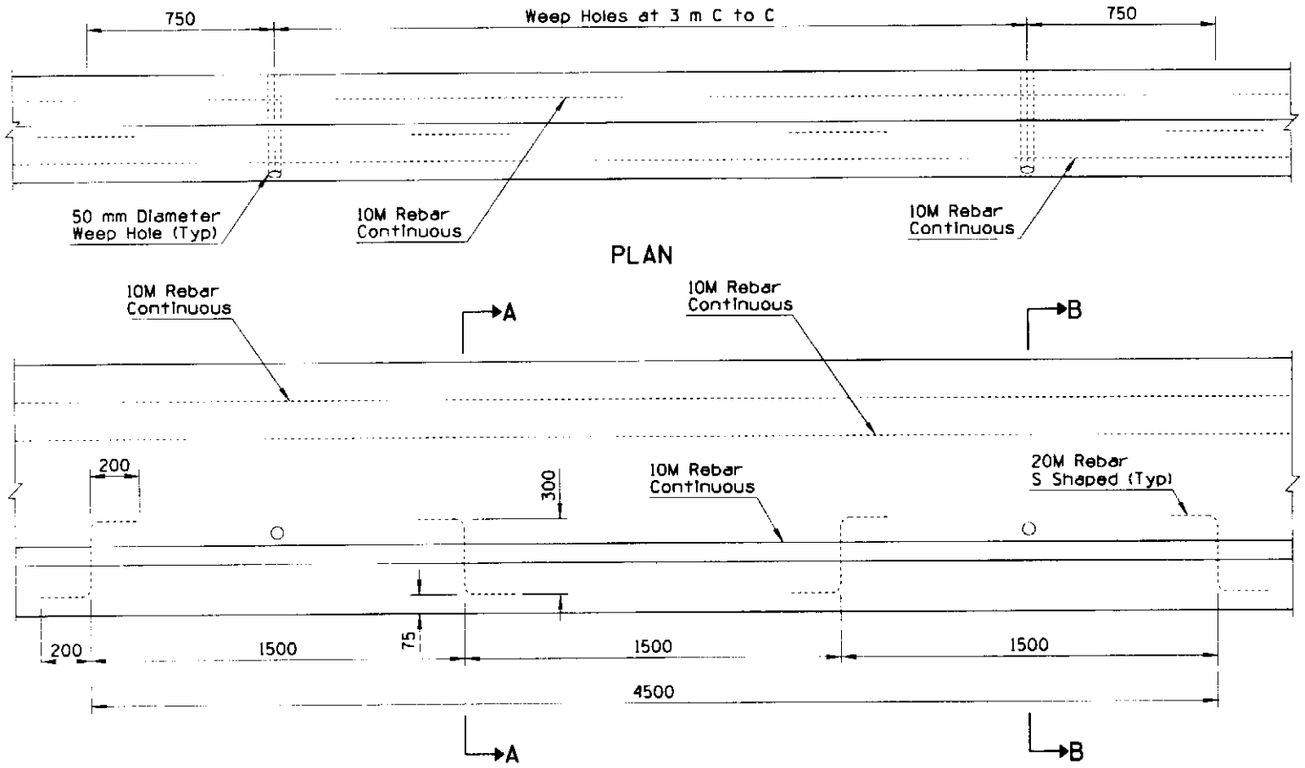

ELEVATION

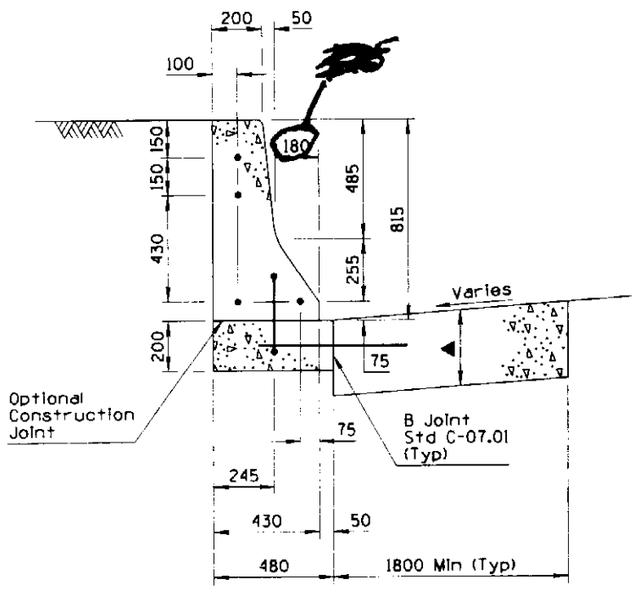

WITH PCC PAVEMENT
SECTION A-A

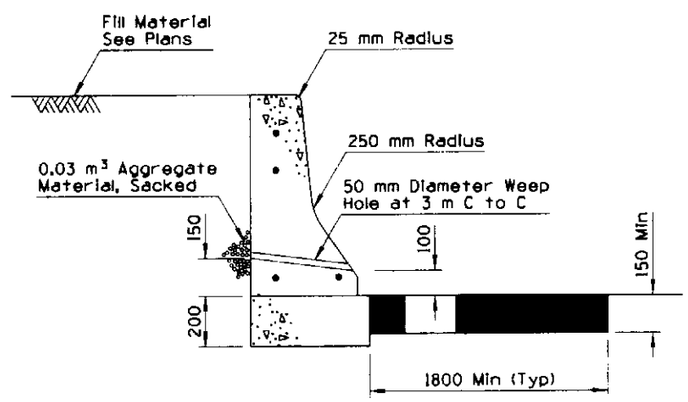

WITH AC PAVEMENT
SECTION B-B

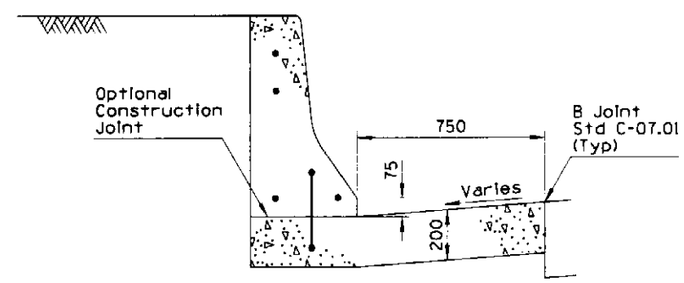

WITH PCC PAVEMENT
BARRIER WITH GUTTER

GENERAL NOTES

1. Half Barrier shall be constructed by the slip form or formed Cast-in-Place method.
2. When obstacles are encountered which prevent the use of slip form equipment, the closure shall be accomplished by the use of stationary forms.
3. Concrete shall be Class S, design strength f'_c = 20 MPa.
4. If the footing and barrier are cast monolithically, 20M S shaped rebars will not be required.
5. In no case shall the width of barrier exceed the width of the barrier footing or overhang the adjacent pavement.
6. 10M Rebar shall extend 300 mm past the construction joint at the completion of the day's pour.

▲ Depth to match adjacent PCCP thickness (200 mm Min).

DESIGN APPROVED Jerry H Otterness	STATE OF ARIZONA DEPARTMENT OF TRANSPORTATION DIVISION OF HIGHWAYS STANDARD DRAWINGS	ISSUE 6/95
APPROVED FOR DISTRIBUTION Ronald Williams	HALF BARRIER CAST IN PLACE SLIP FORM & FIXED FORM	DRAWING NO. C-10.60

Metric

NO	DESCRIPTION OF REVISIONS	MADE BY	DATE

Metric

GENERAL NOTES

1. Concrete shall be Class S, design strength f'_c = 30 MPa.
2. Half Barrier shall be placed upon either Asphaltic or Portland Cement Concrete Pavement.
3. Pavement thickness adjacent to Half Barrier shall be 20 mm minimum.
4. The Half Barrier shall be placed upon a bed of grout in order to provide a uniform bearing.
5. Doweled joints shall be grouted under pressure until all of the openings and the joints are filled.
6. This standard shall not be used when an individual run consists of less than five 6 meter sections.
7. All bend dimensions for reinforcing steel shall be out-to-out of bars.

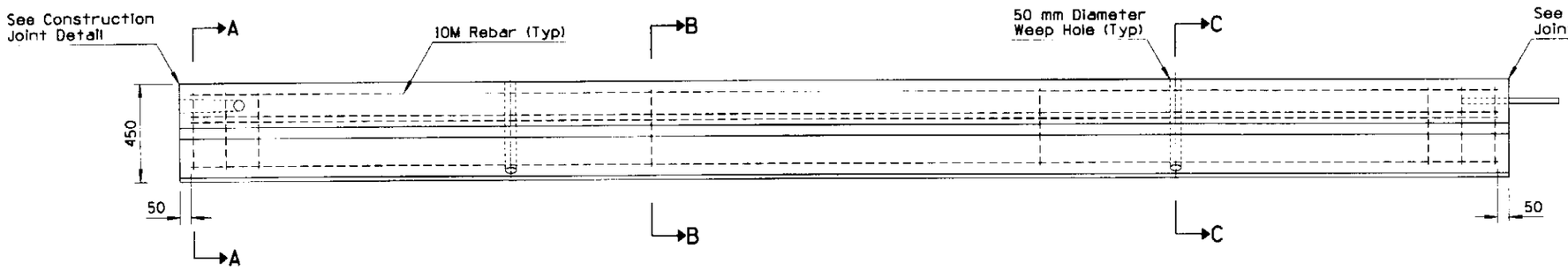

PLAN

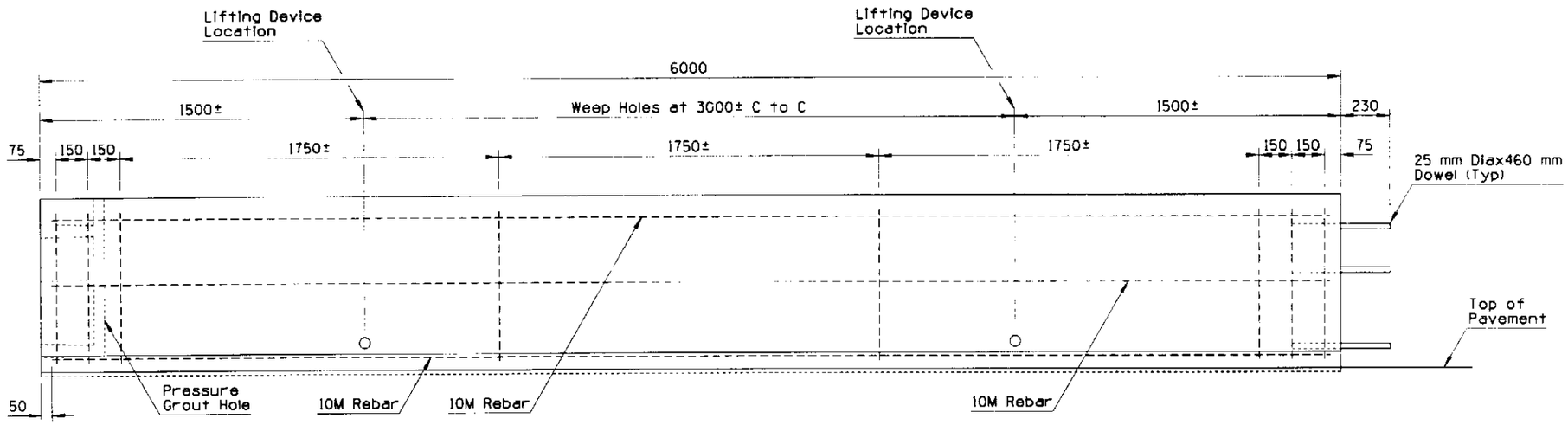

ELEVATION

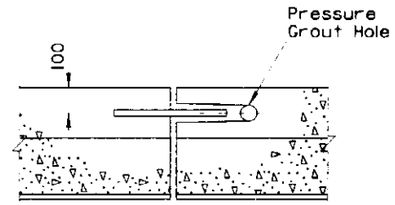

PLAN

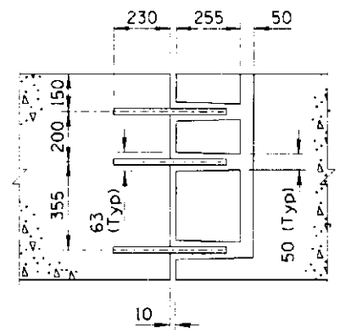

ELEVATION
CONSTRUCTION JOINT DETAIL

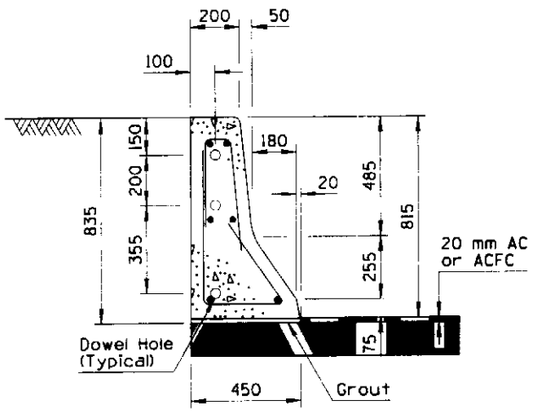

SECTION A-A

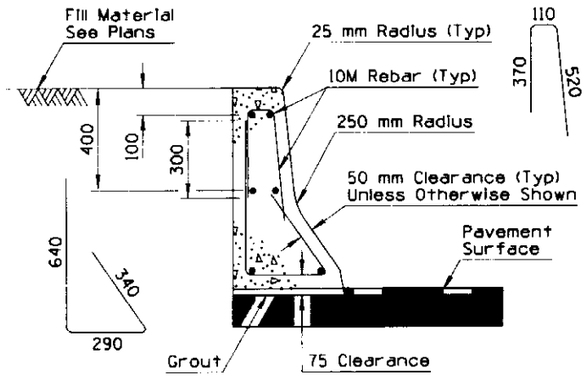

AT REBAR
SECTION B-B

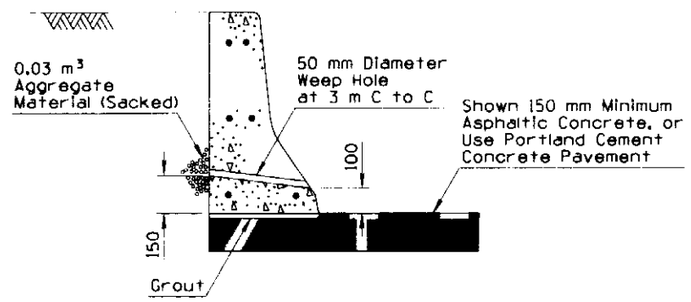

AT WEEP HOLE
SECTION C-C

DESIGN APPROVED	STATE OF ARIZONA DEPARTMENT OF TRANSPORTATION DIVISION OF HIGHWAYS STANDARD DRAWINGS	ISSUE 6/95
APPROVED FOR DISTRIBUTION	HALF BARRIER, PRECAST	DRAWING NO. C-10.61

Metric

NO	DESCRIPTION OF REVISIONS	MADE BY	DATE
1			
2			
3			

Metric

GENERAL NOTES

1. Half Barrier shall be constructed by the slip form or formed Cast-in-Place method.
2. When obstacles are encountered which prevent the use of slip form equipment, the closure shall be accomplished by the use of stationary forms.
3. Concrete shall be Class S, design strength f'_c = 20 MPa.
4. 10M Rebar shall extend 300 mm past the construction joint at the completion of the day's pour.
5. Thickness of footing, "D" can be adjusted to match the PCCP thickness, as approved by the Engineer.
6. When the pavement section slopes away from the gutter, the slope of the gutter shall match the pavement cross slope. Therefore, the 50 mm gutter depression is not applicable.
7. When bridges are encountered, the cross slope of the gutter shall be transitioned to match the cross slope of the bridge. Length of the transition is 4.5 m.

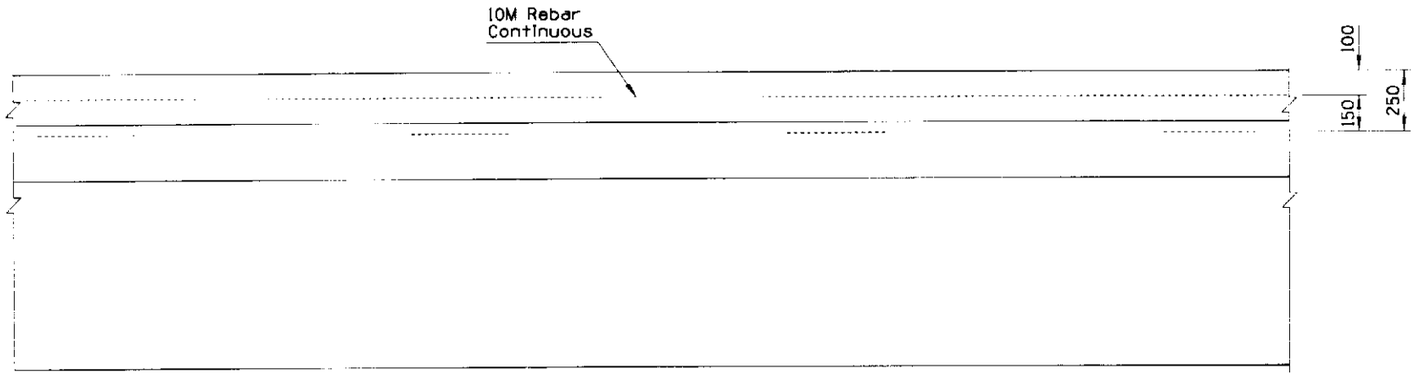

PLAN

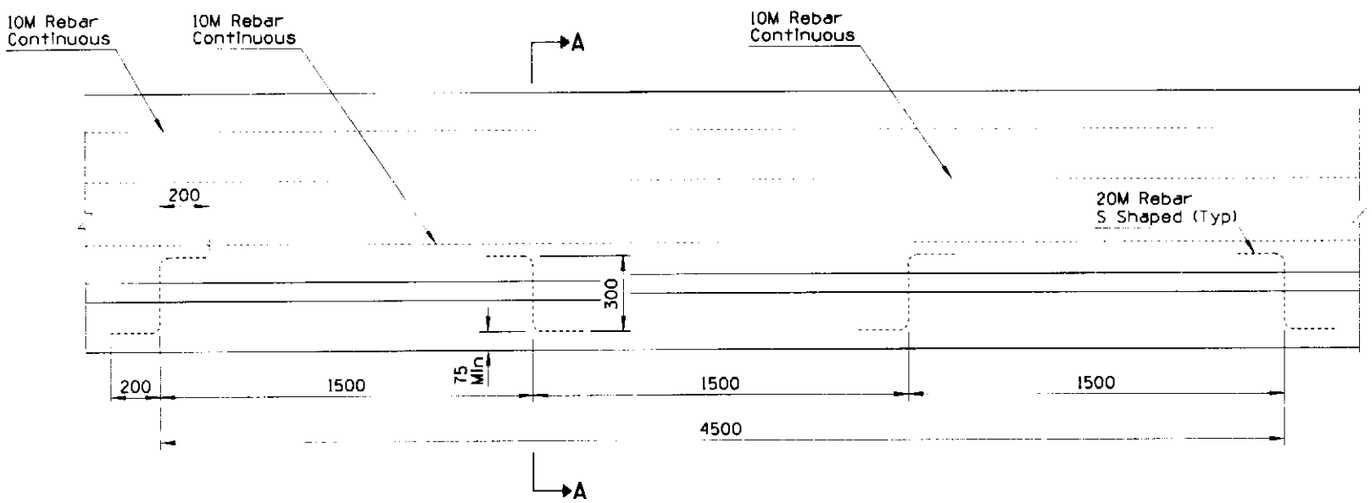

ELEVATION

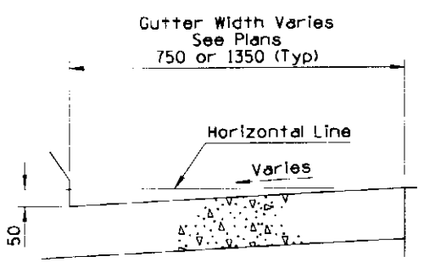

BARRIER GUTTER DETAIL

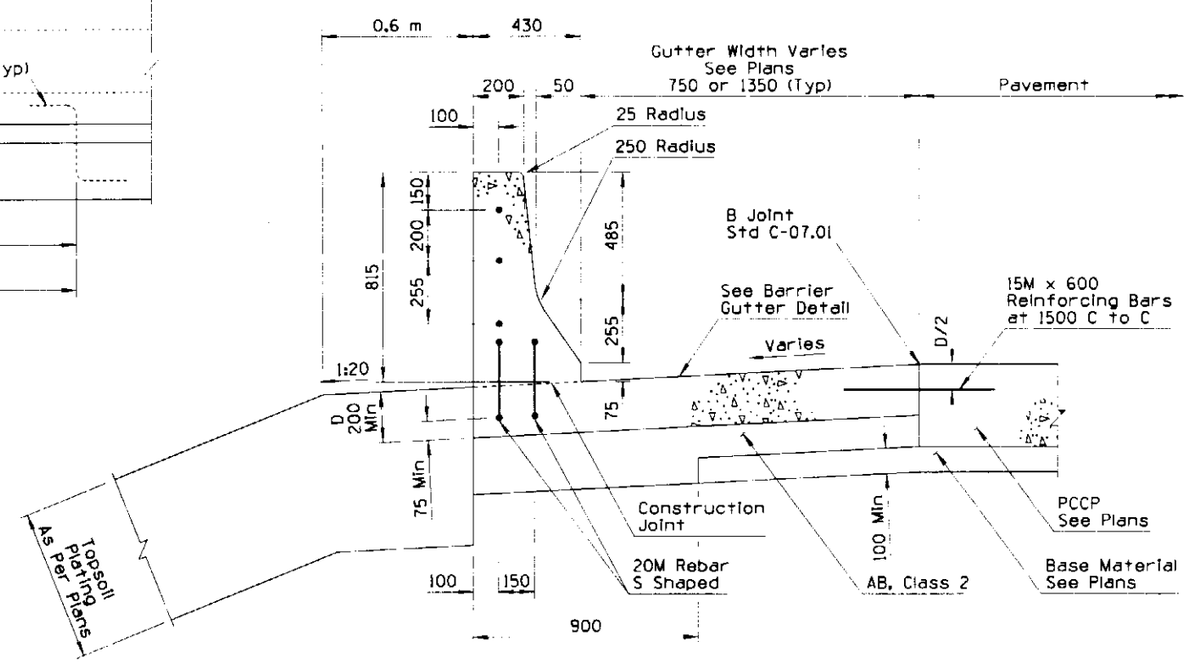

SECTION A-A

DESIGN APPROVED	STATE OF ARIZONA DEPARTMENT OF TRANSPORTATION DIVISION OF HIGHWAYS STANDARD DRAWINGS	ISSUE 6/95
APPROVED FOR DISTRIBUTION	CONCRETE HALF BARRIER WITH GUTTER	DRAWING NO. C-10.62

Metric

NO.	DESCRIPTION OF REVISIONS	MADE BY	DATE

GENERAL NOTES

1. Concrete shall be Class S, design strength f'_c = 20 MPa.
2. If the footing and barrier are cast monolithically, 20M S shaped rebars will not be required.
3. In no case shall the width of barrier exceed the width of the barrier footing or overhang the adjacent pavement.
4. 10M Rebar shall extend 300 mm past the construction joint at the completion of the day's pour.

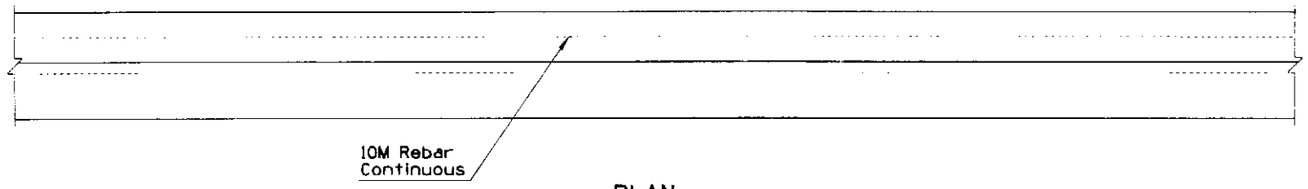

PLAN

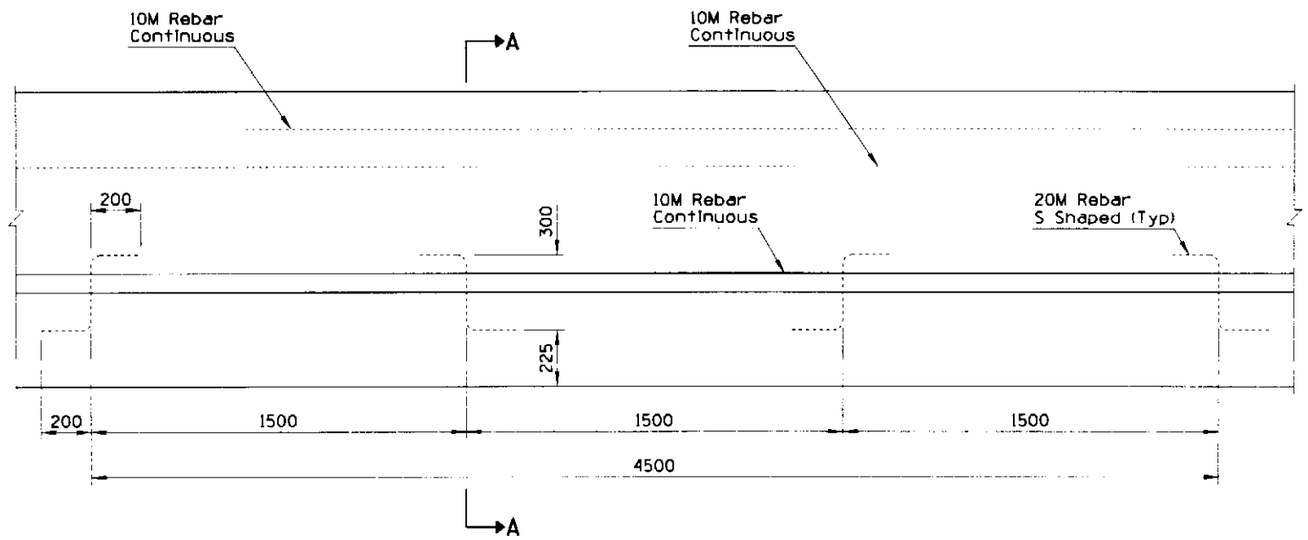

ELEVATION

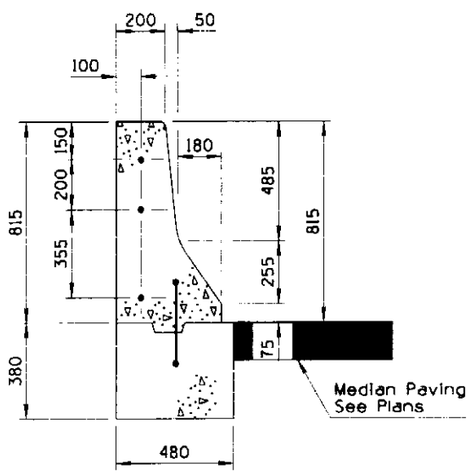

WITH AC
SECTION A-A

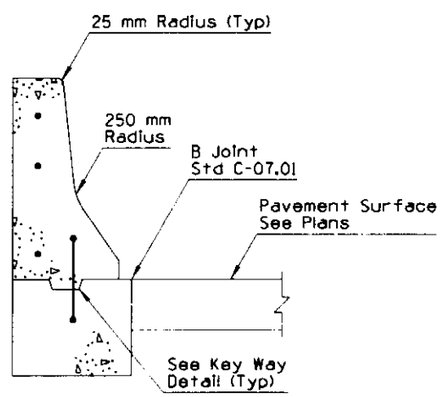

WITH PCCP
SECTION A-A

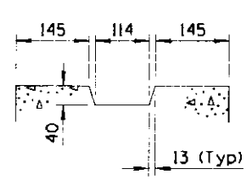

KEY WAY DETAIL

DESIGN APPROVED	STATE OF ARIZONA DEPARTMENT OF TRANSPORTATION DIVISION OF HIGHWAYS STANDARD DRAWINGS	ISSUE 6/95
APPROVED FOR DISTRIBUTION	HALF BARRIER (AT PIERS) CAST IN PLACE, FIXED FORM	DRAWING NO. C-10.64 Sheet 1 of 2

DESCRIPTION OF REVISIONS	MADE BY	DATE

Metric

GENERAL NOTES

1. Concrete shall be Class S, design strength f'_c = 30 Mpa.
2. The Half Barrier shall be placed upon a bed of grout in order to provide a uniform bearing.
3. Doweled joints shall be grouted under pressure until all of the openings and the joints are filled.
4. This standard shall not be used when an individual run consists of less than five 6 meter sections.
5. All bend dimensions for reinforcing steel shall be out-to-out of bars.

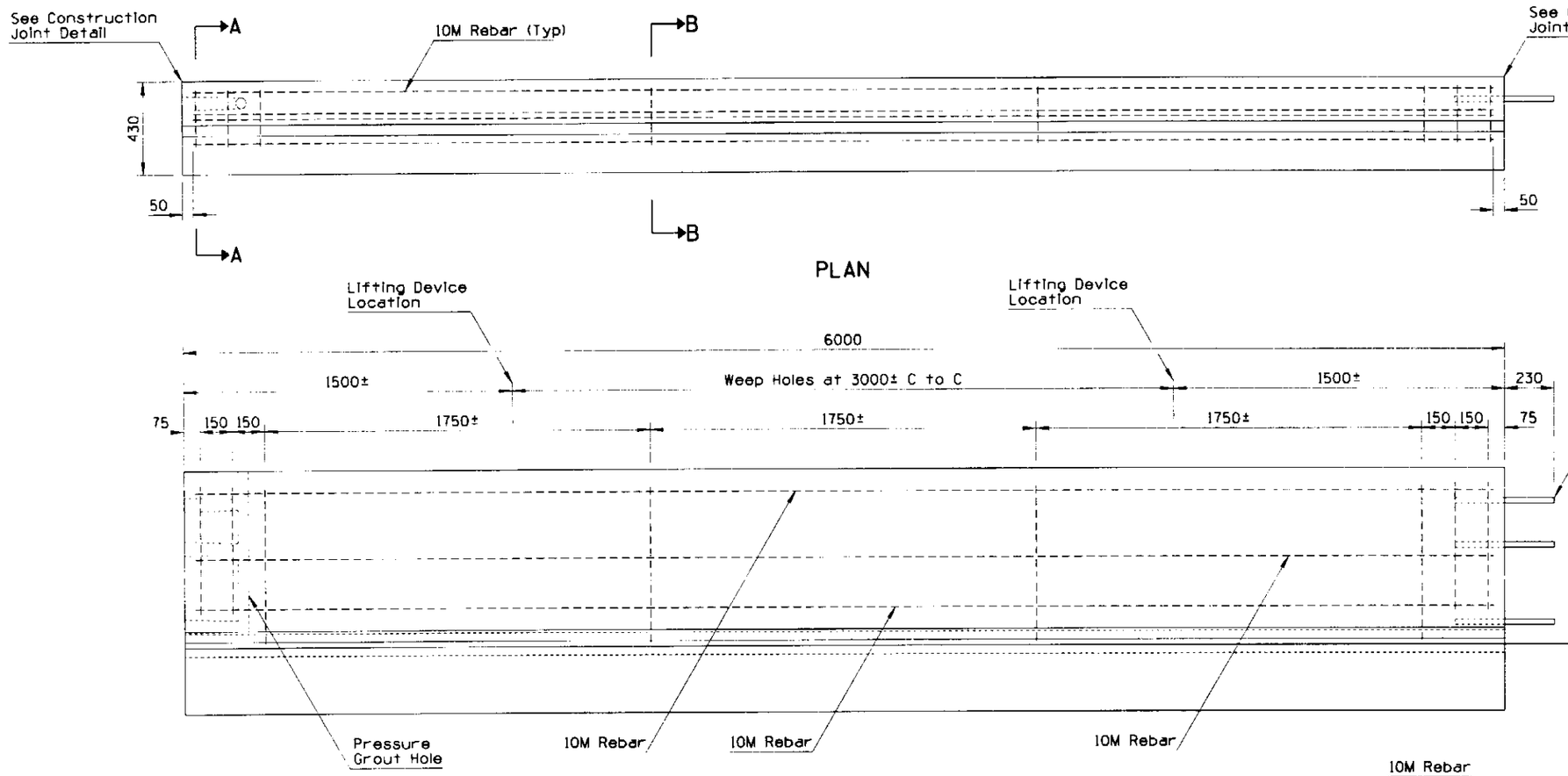

PLAN

ELEVATION

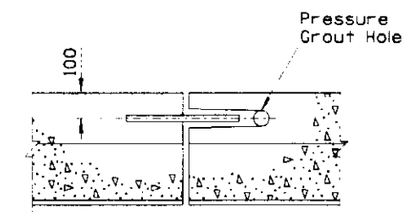

PLAN

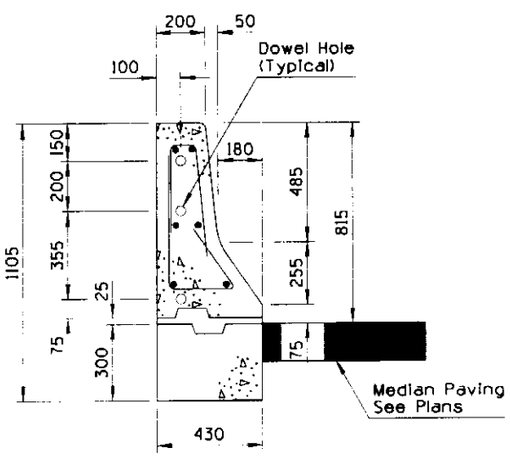

WITH AC
SECTION A-A

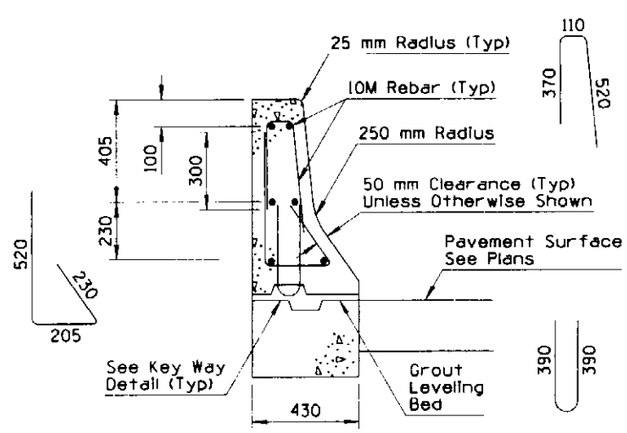

AT REBAR - WITH PCCP
SECTION B-B

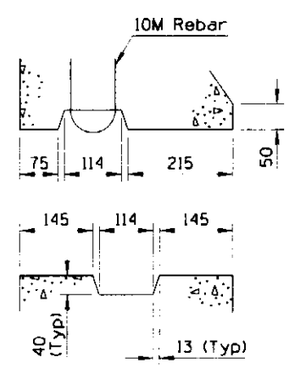

KEY WAY DETAIL

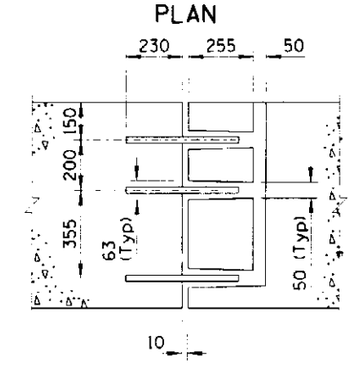

ELEVATION
CONSTRUCTION JOINT DETAIL

DESIGN APPROVED Terry H. Otterness	STATE OF ARIZONA DEPARTMENT OF TRANSPORTATION DIVISION OF HIGHWAYS STANDARD DRAWINGS	ISSUE 6/95
APPROVED FOR DISTRIBUTION Ronald A. Williams	HALF BARRIER (AT PIERS) PRECAST	DRAWING NO. C-10.64 Sheet 2 of 2

Metric

NO.	DESCRIPTION OF REVISIONS	MADE BY	DATE

Metric

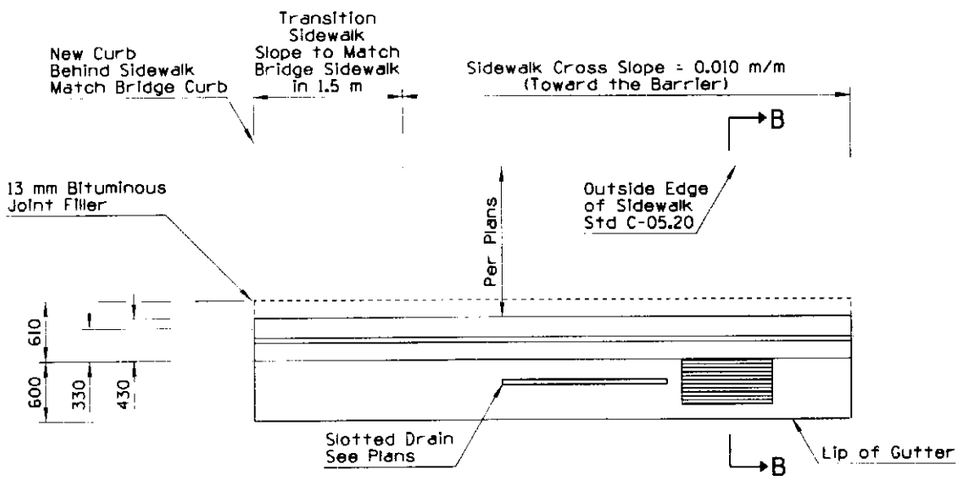

PLAN VIEW

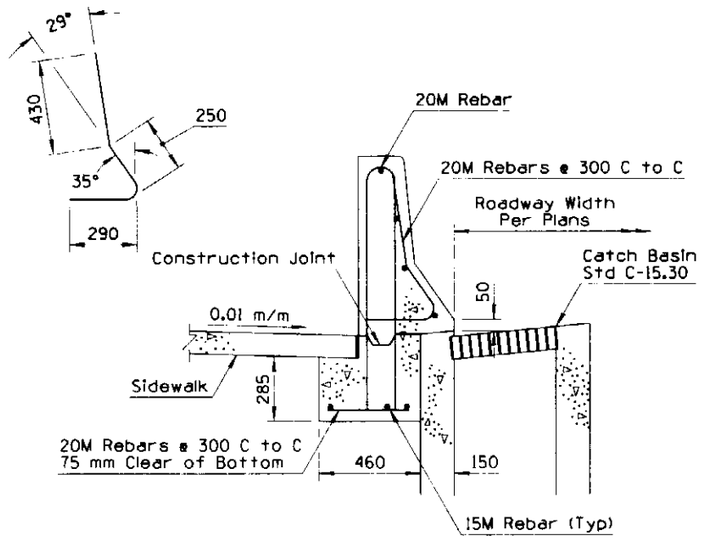

SECTION B-B
AT CATCH BASINS

GENERAL NOTES

1. All concrete shall be Class "S" (f'c = 20 MPa).
2. All reinforcing steel shall conform to Section 1003.
3. All reinforcing steel shall have 40 mm minimum clear cover unless otherwise noted.
4. Transverse construction joints shall extend through the foundation slab and be located at intervals not to exceed 6 m.
5. See drainage sheets for slotted drain and catch basin details.
6. Departure termination may be substituted for the C-10.76 barrier transition under departure conditions.
7. See Std. C-05.20 for sidewalk construction.
8. All bend dimensions for reinforcing steel shall be out-to-out of bars.

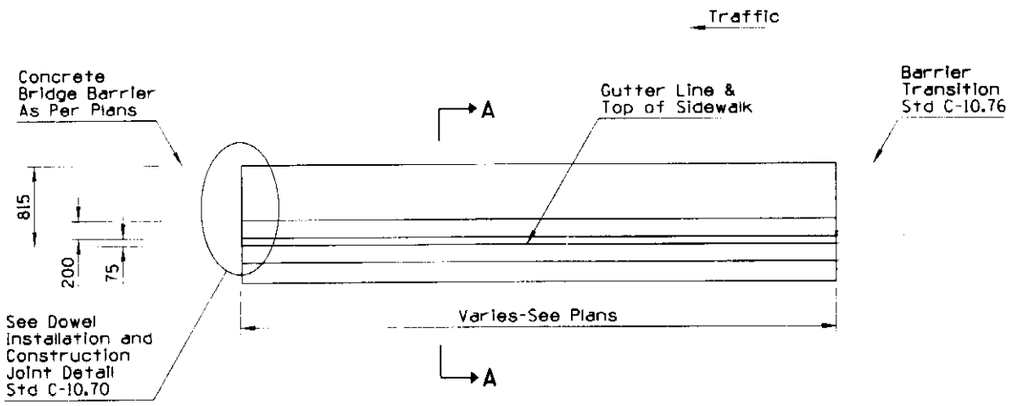

ELEVATION

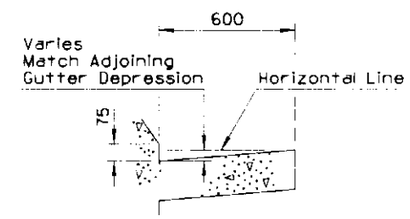

BARRIER GUTTER DETAIL

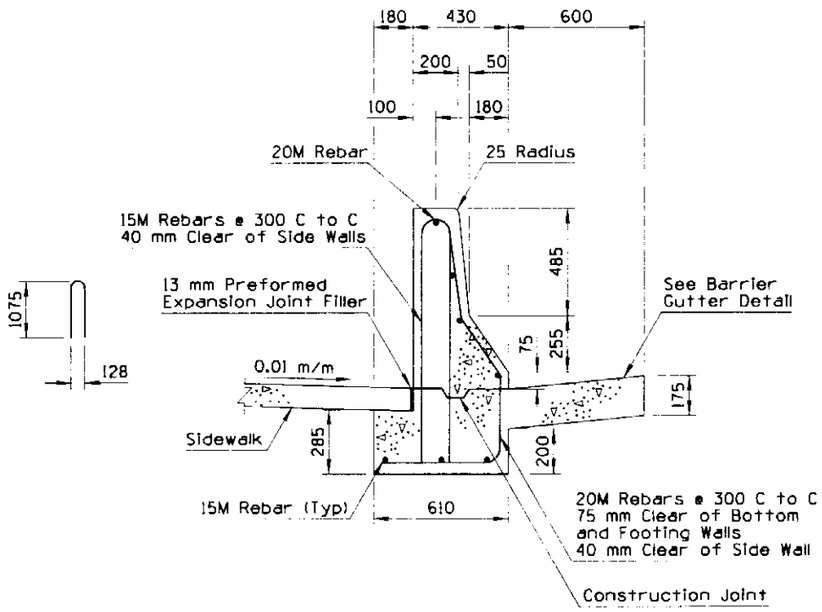

SECTION A-A

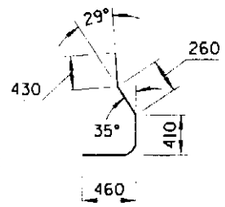

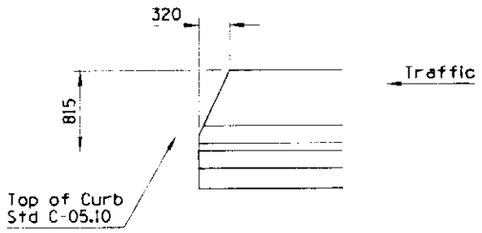

ELEVATION
DEPARTURE TERMINATION DETAIL

DESIGN APPROVED	STATE OF ARIZONA DEPARTMENT OF TRANSPORTATION DIVISION OF HIGHWAYS STANDARD DRAWINGS	ISSUE 6/95
APPROVED FOR DISTRIBUTION	HALF BARRIER WITH SIDEWALK	DRAWING NO. C-10.65

Metric

NO.	DESCRIPTION OF REVISIONS	MADE BY	DATE
1			
2			
3			
4			

Metric

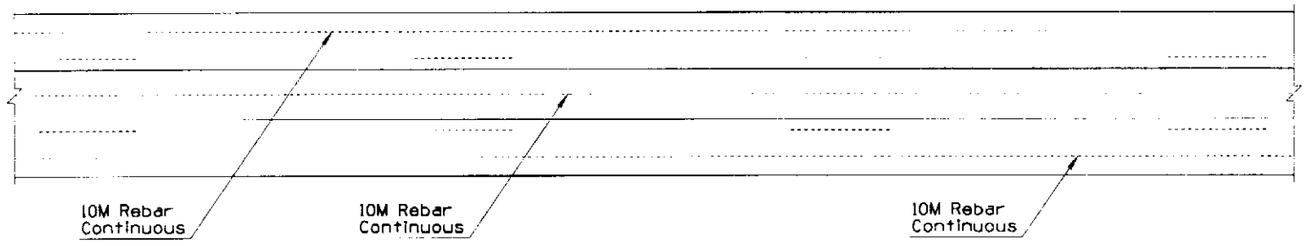

PLAN

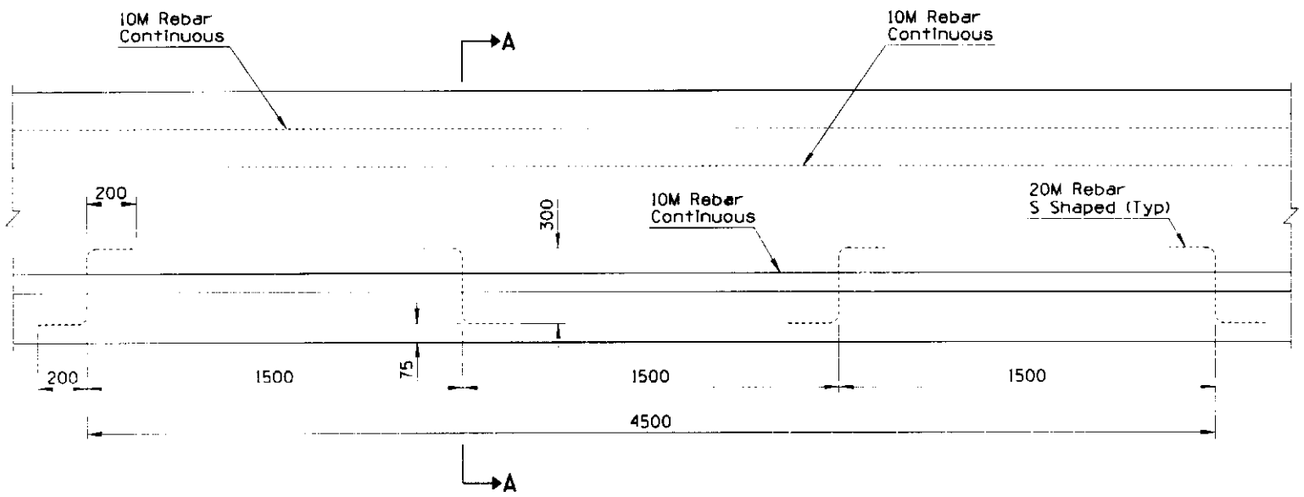

ELEVATION

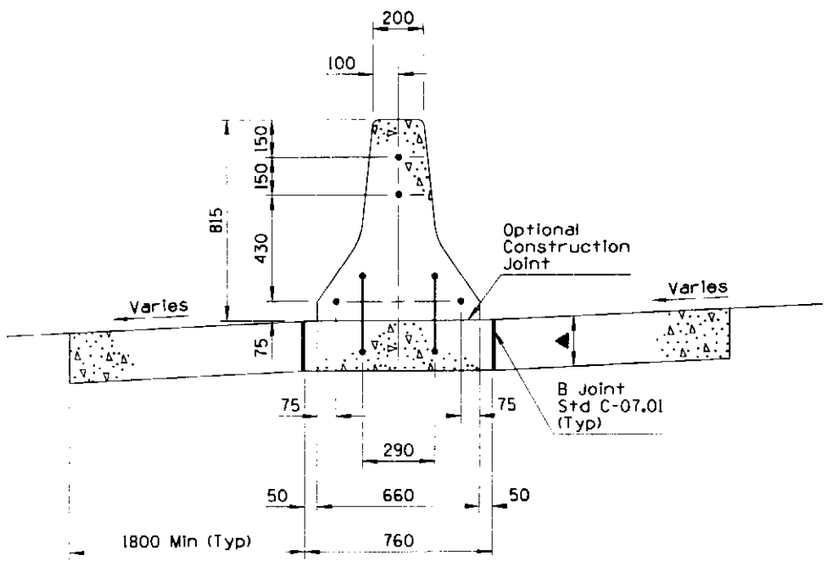

WITH PCC PAVEMENT

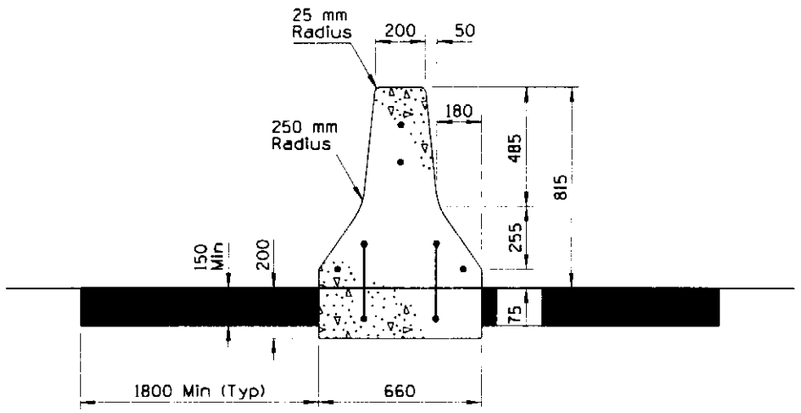

WITH AC PAVEMENT

SECTION A-A

GENERAL NOTES

1. Half Barrier shall be constructed by the slip form or formed Cast-in-Place method.
2. When obstacles are encountered which prevent the use of slip form equipment, the closure shall be accomplished by the use of stationary forms.
3. Concrete shall be Class S, design strength f'_c = 20 MPa.
4. If the footing and barrier are cast monolithically, 20M S shaped rebars will not be required.
5. In no case shall the width of barrier exceed the width of the barrier footing or overhang the adjacent pavement.
6. 10M Rebar shall extend 300 mm past the construction joint at the completion of the day's pour.

▲ Depth to match adjacent PCCP thickness (200 mm Min).

DESIGN APPROVED Terry H. Otterness	STATE OF ARIZONA DEPARTMENT OF TRANSPORTATION DIVISION OF HIGHWAYS STANDARD DRAWINGS	ISSUE 6/95
APPROVED FOR DISTRIBUTION Ronald A. Williams	MEDIAN BARRIER CAST IN PLACE SLIP FORM & FIXED FORM	DRAWING NO. C-10.66

Metric

NO.	DESCRIPTION OF REVISIONS	MADE BY	DATE
1			
2			
3			
4			

Metric

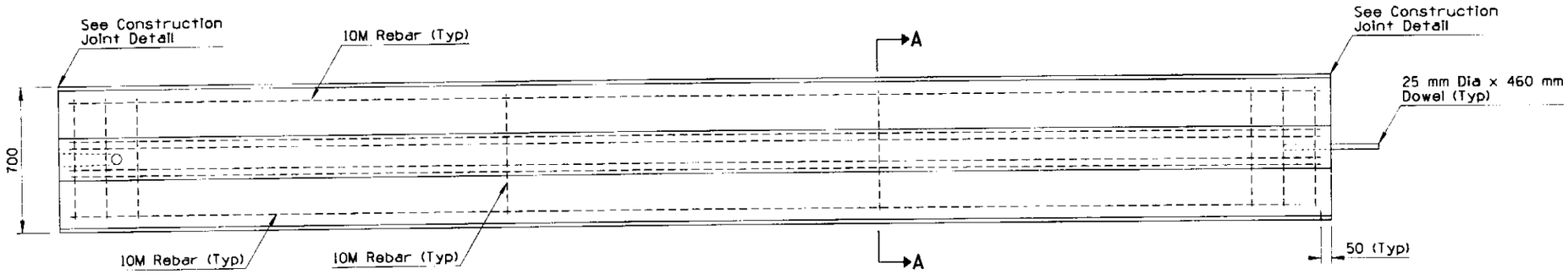

PLAN

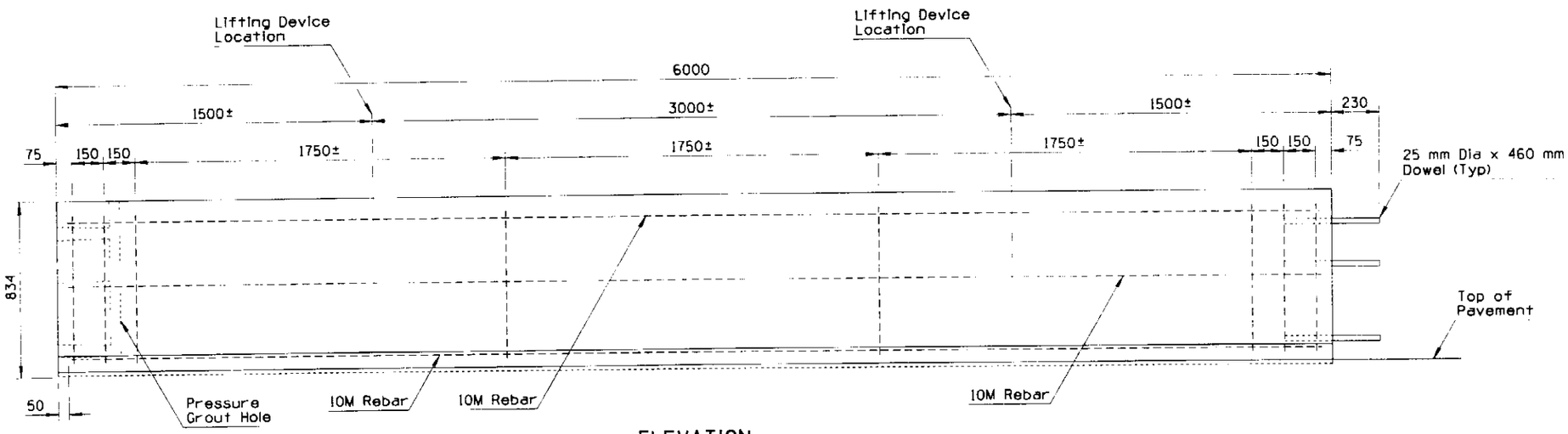

ELEVATION

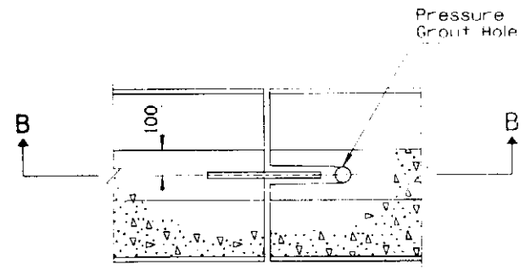

PLAN

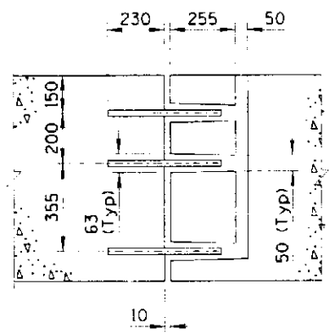

SECTION B-B
CONSTRUCTION JOINT DETAIL

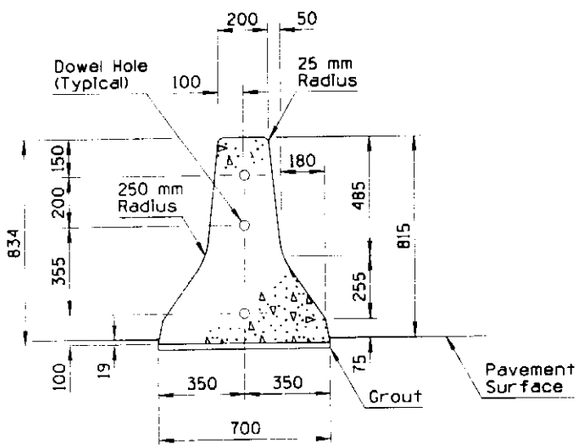

END SECTION

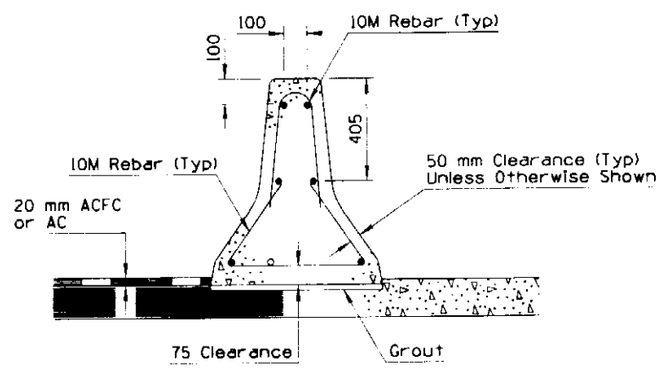

SECTION A-A

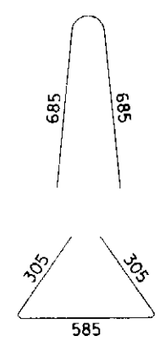

GENERAL NOTES

1. Concrete shall be Class S, design strength f'_c = 30 MPa.
2. Half Barrier shall be placed upon either Asphaltic or Portland Cement Concrete Pavement.
3. Pavement thickness adjacent to Half Barrier shall be 19 mm minimum.
4. The Half Barrier shall be placed upon a bed of grout in order to provide a uniform bearing.
5. Doweled joints shall be grouted under pressure until all of the openings and the joints are filled.
6. This standard shall not be used when an individual run consists of less than five 6 meter sections.
7. All bend dimensions for reinforcing steel shall be out-to-out of bars.

DESIGN APPROVED Jerry H. Otterness	STATE OF ARIZONA DEPARTMENT OF TRANSPORTATION DIVISION OF HIGHWAYS STANDARD DRAWINGS	DATE 6/95
APPROVED FOR DISTRIBUTION Ronald A. Williams	MEDIAN BARRIER, PRECAST	DRAWING NO. C-10.68

Metric

NO.	DESCRIPTION OF REVISIONS	MADE BY	DATE

Metric

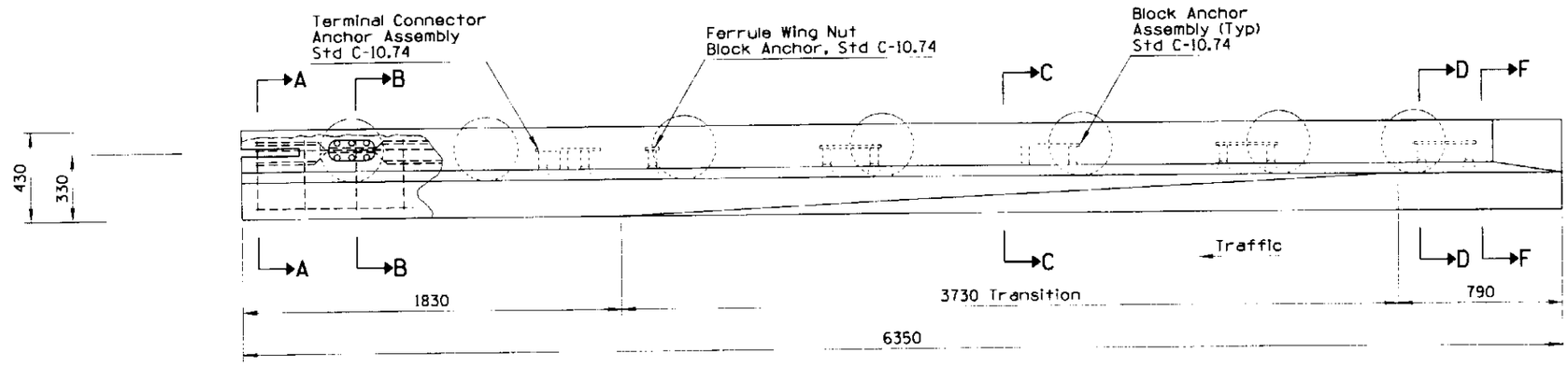

PLAN

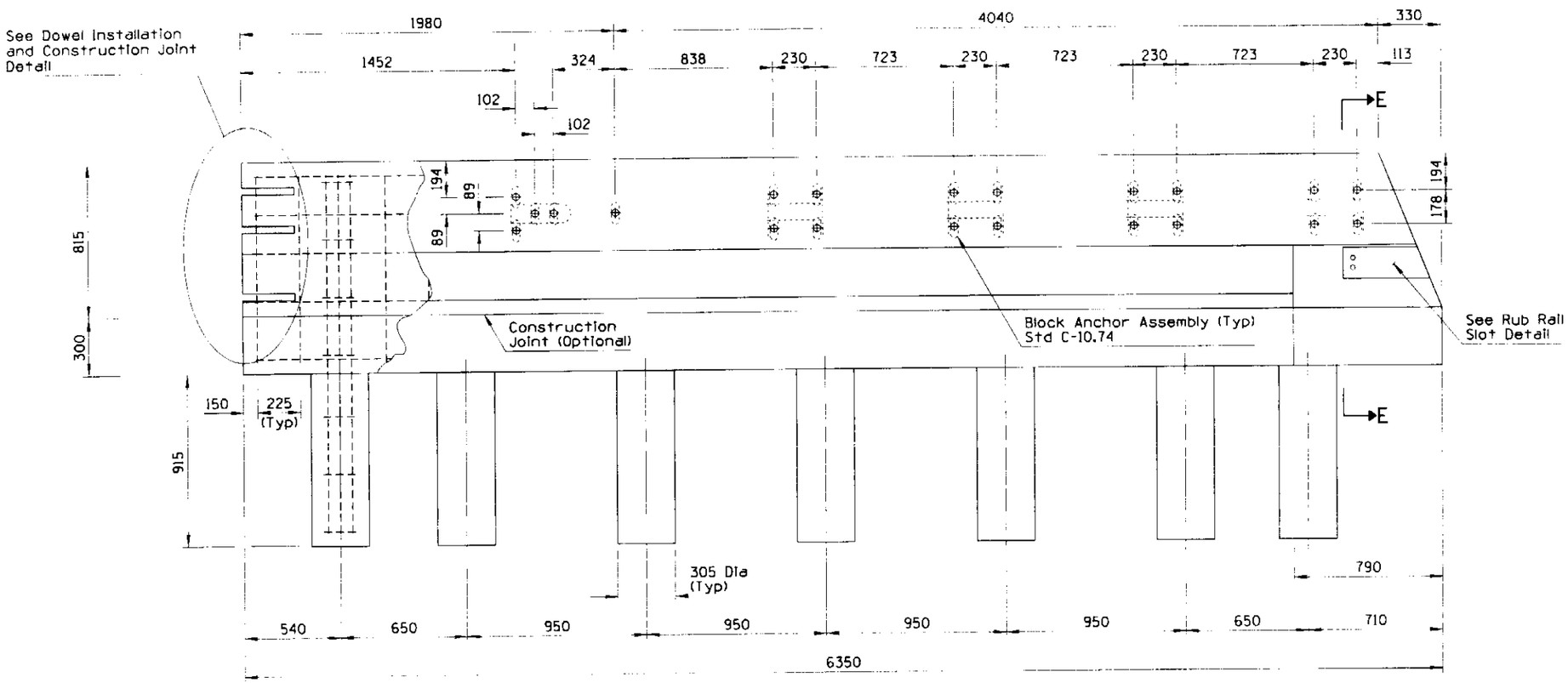

ELEVATION

BARRIER WITHOUT CURB

GENERAL NOTES

1. Concrete shall be constructed by the Fixed Form Cast-In-Place method.
2. Concrete shall be Class S, design strength f'_c = 20 MPa.
3. All reinforcing steel shall have 50 mm minimum clear cover unless otherwise noted.
4. All bend dimensions for reinforcing steel shall be out-to-out of bars.

DESIGN APPROVED Terry H. Otterness	STATE OF ARIZONA DEPARTMENT OF TRANSPORTATION DIVISION OF HIGHWAYS STANDARD DRAWINGS	ISSUE 6/95
APPROVED FOR DISTRIBUTION Ronald Williams	CONCRETE HALF BARRIER TRANSITION	DRAWING NO. C-10.70 Sheet 1 of 4

Metric

NO.	DESCRIPTION OF REVISIONS	MADE BY	DATE

Metric

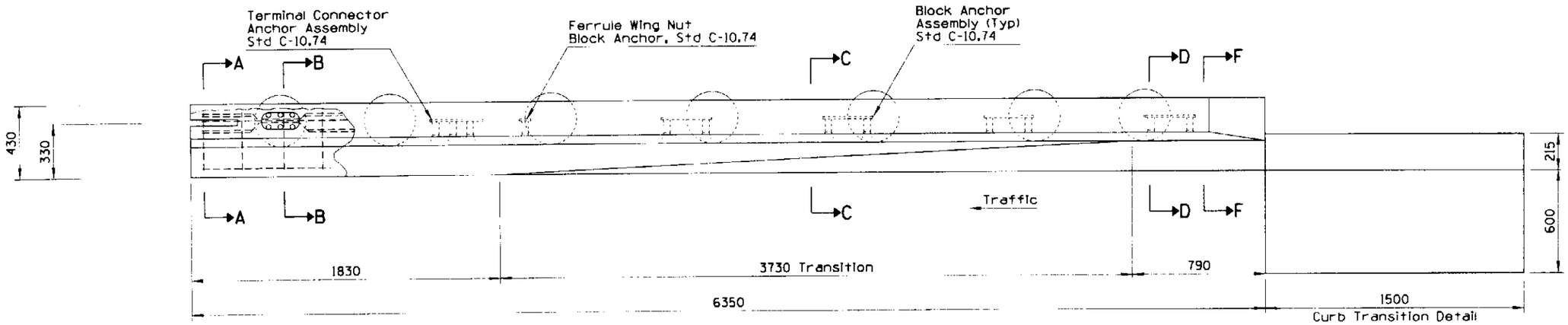

PLAN

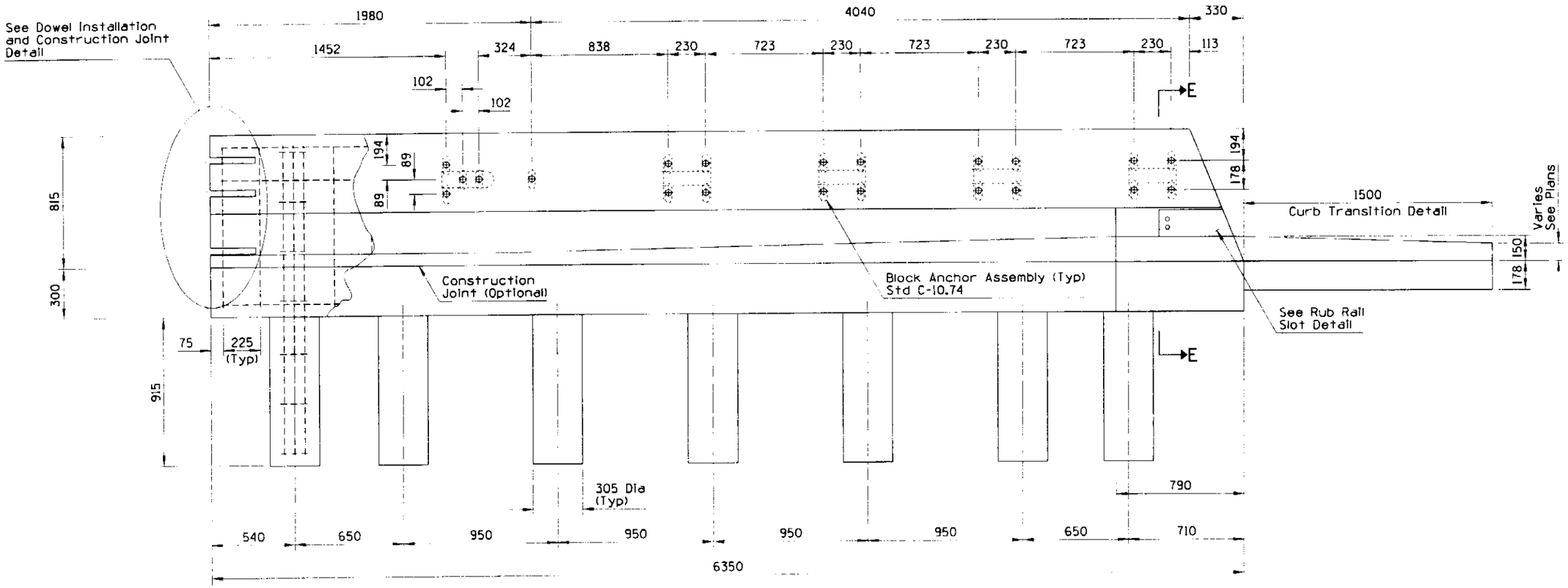

ELEVATION

BARRIER WITH CURB AND GUTTER

DESIGN APPROVED	STATE OF ARIZONA DEPARTMENT OF TRANSPORTATION DIVISION OF HIGHWAYS STANDARD DRAWINGS	ISSUE
Henry H. Otterness		6/95
APPROVED FOR DISTRIBUTION Ronald Williams	CONCRETE HALF BARRIER TRANSITION	DRAWING NO. C-10.70 Sheet 2 of 4

Metric

NO	DESCRIPTION OF REVISIONS	MADE BY	DATE
1			
2			
3			
4			

Metric

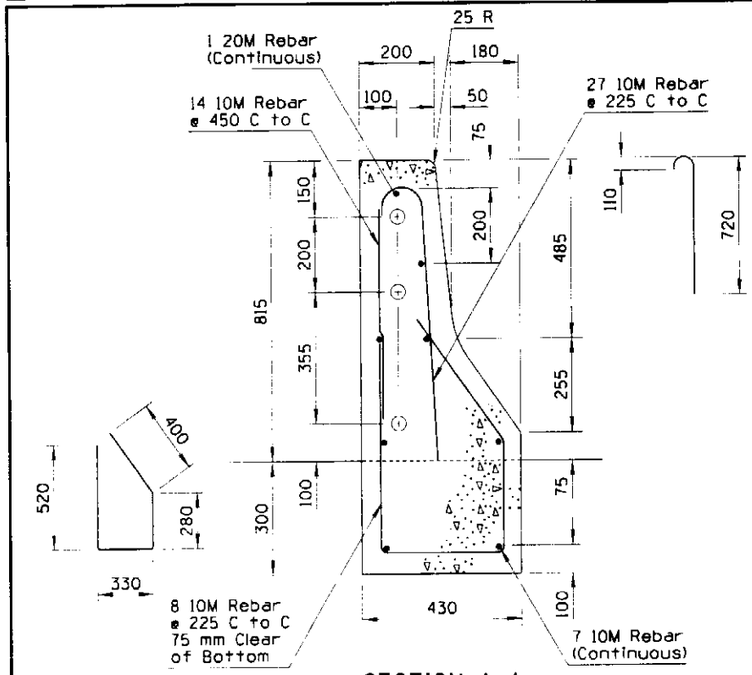

SECTION A-A

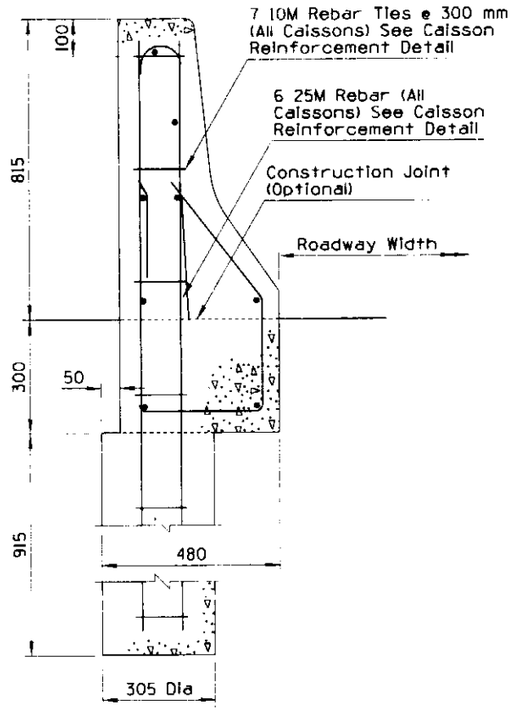

SECTION B-B

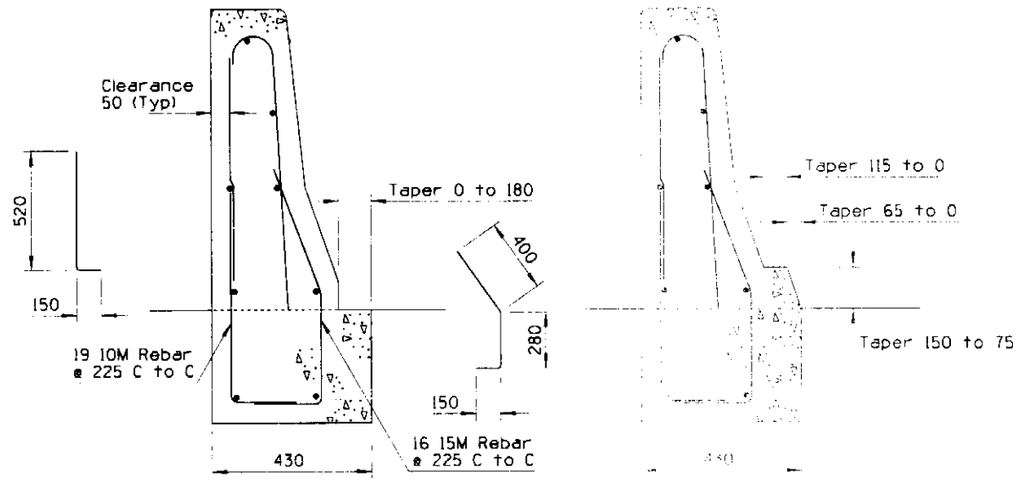

SECTION C-C

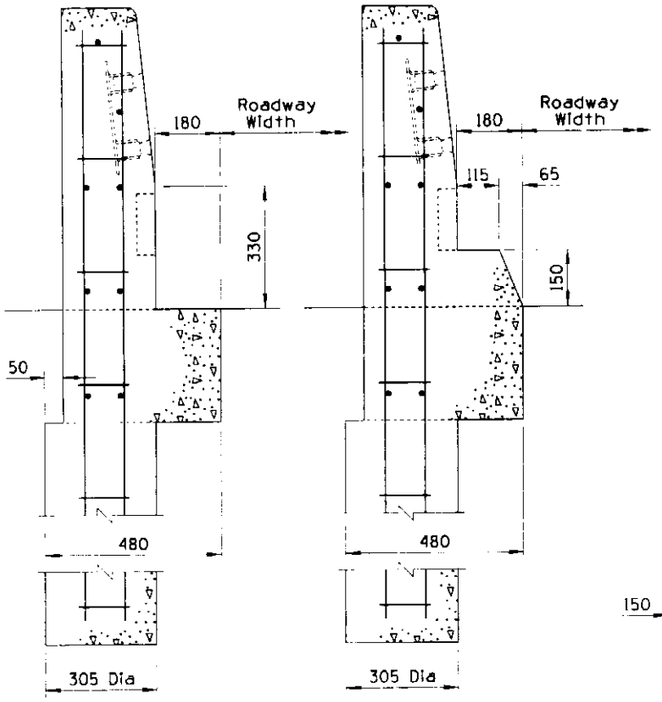

SECTION D-D

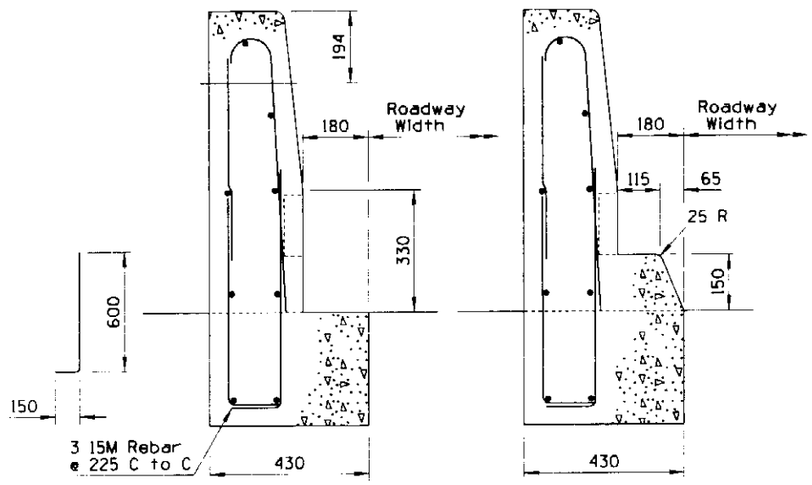

SECTION E-E

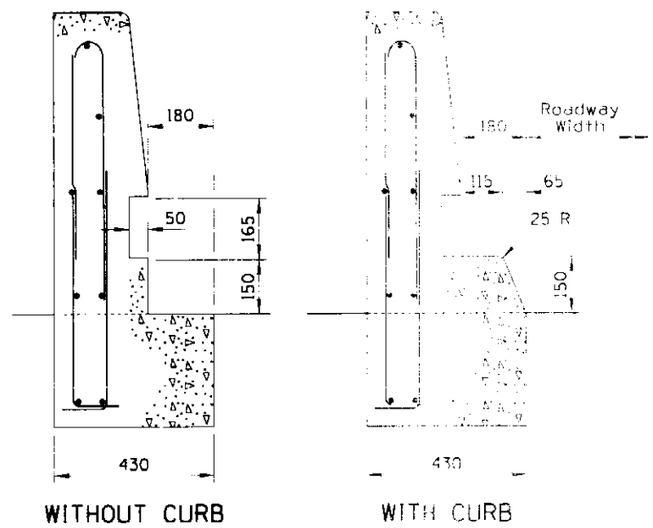

SECTION F-F

DESIGN APPROVED	STATE OF ARIZONA DEPARTMENT OF TRANSPORTATION DIVISION OF HIGHWAYS STANDARD DRAWINGS	ISSUE 6/95
APPROVED FOR DISTRIBUTION	CONCRETE HALF BARRIER TRANSITION	DRAWING NO. C-10.70 Sheet 5 of 4

Metric

NO	DESCRIPTION OF REVISIONS	MADE BY	DATE
1			
2			
3			
4			

Metric

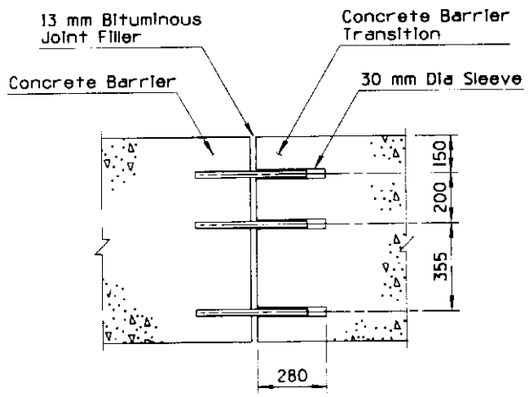

Joint Assembly

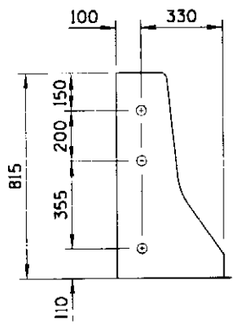

Dowel Locations

DOWEL INSTALLATION
AND CONSTRUCTION JOINT DETAIL

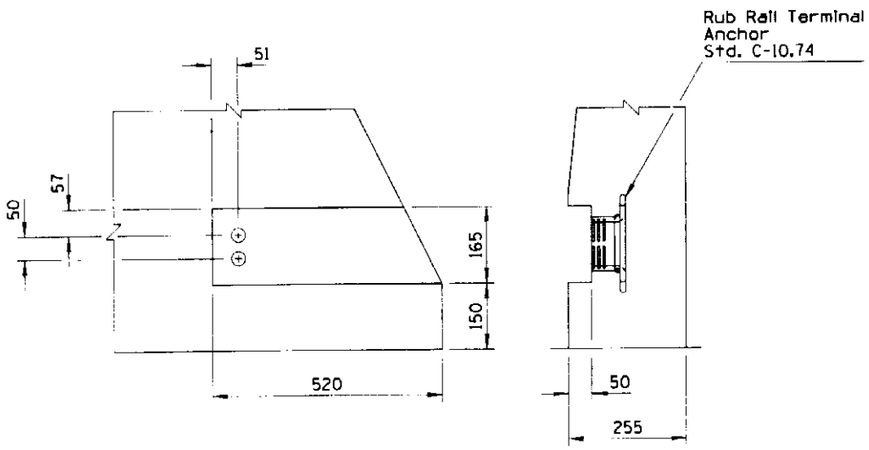

RUB RAIL SLOT DETAIL

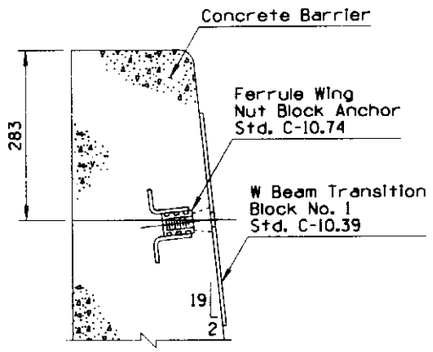

BLOCK AND ANCHORAGE
HALF BARRIER
(BLOCK 1 SHOWN)

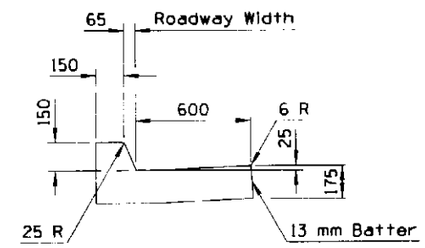

Barrier End

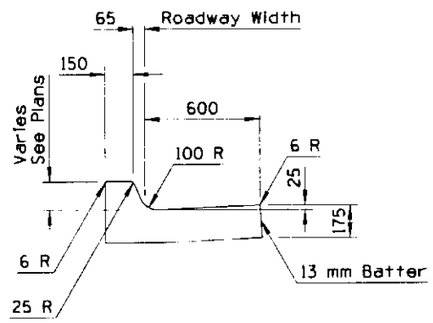

Curb End

CURB TRANSITION DETAIL

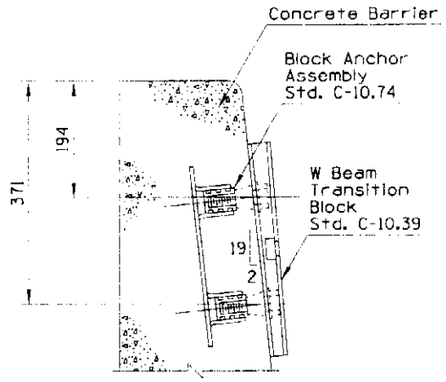

BLOCK AND ANCHORAGE
HALF BARRIER
(BLOCK 2 SHOWN)

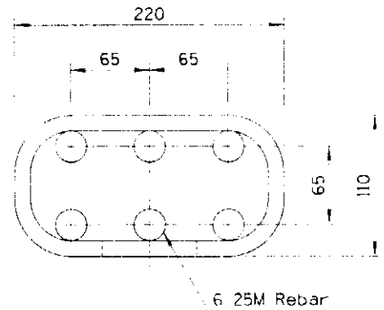

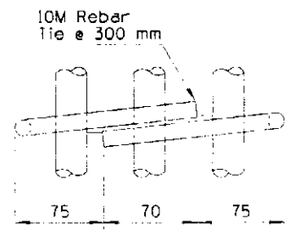

CAISSON REINFORCEMENT

DESIGN APPROVED: Terry H. Otterness	STATE OF ARIZONA DEPARTMENT OF TRANSPORTATION DIVISION OF HIGHWAYS STANDARD DRAWINGS	ISSUE 6/95
APPROVED FOR DISTRIBUTION: Ronald Williams	CONCRETE HALF BARRIER TRANSITION	DRAWING NO. C-10.70 Sheet 4 of 4

Metric

NO.	DESCRIPTION OF REVISIONS	MADE BY	DATE

Metric

GENERAL NOTES

1. Half Barrier shall be constructed by the Fixed Form Cast-in-Place method.
2. Concrete shall be Class S, design strength f'_c = 20 MPa.
3. All reinforcing steel shall have 50 mm minimum clear cover unless otherwise noted.
4. All bend dimensions for reinforcing steel shall be out-to-out of bars.

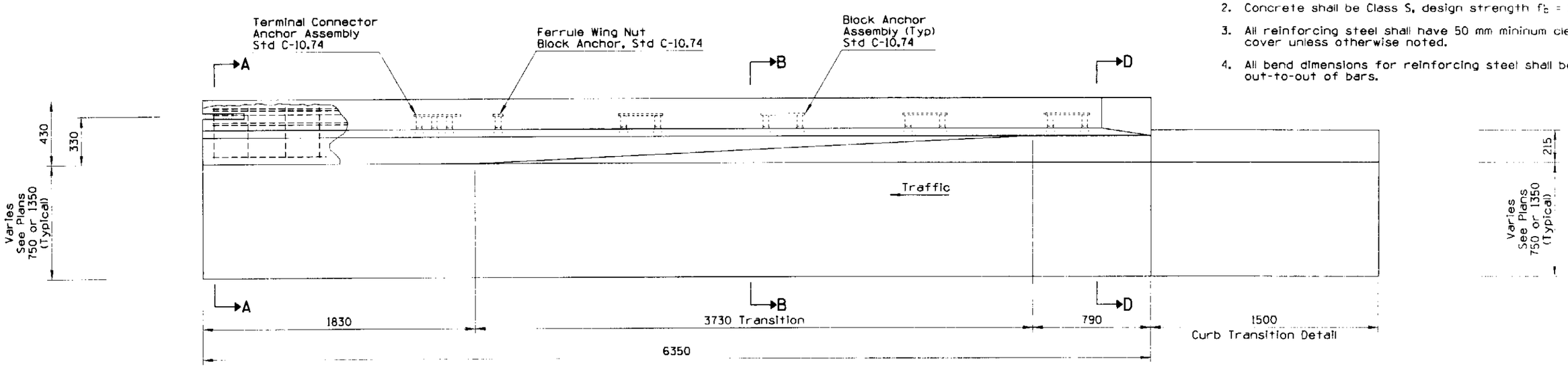

PLAN

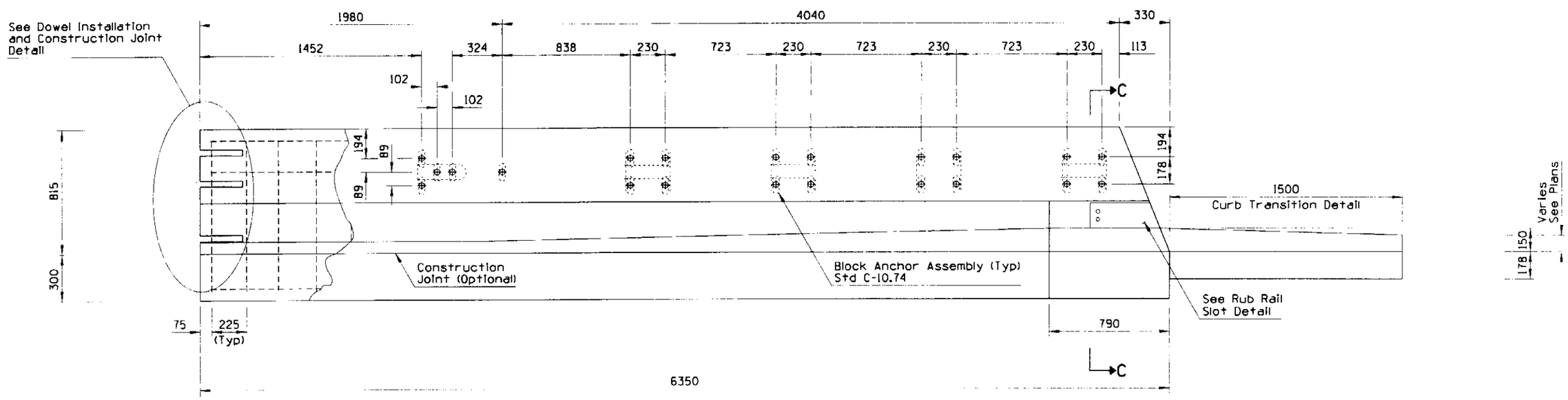

ELEVATION

BARRIER WITH CURB AND GUTTER

DESIGN APPROVED	STATE OF ARIZONA DEPARTMENT OF TRANSPORTATION DIVISION OF HIGHWAYS STANDARD DRAWINGS	ISSUE 6/95
APPROVED FOR DISTRIBUTION	CONCRETE HALF BARRIER TRANSITION	DRAWING NO. C-10.71 Sheet 1 of 3

Metric

NO.	DESCRIPTION OF REVISIONS	MADE BY	DATE
1			
2			
3			

Metric

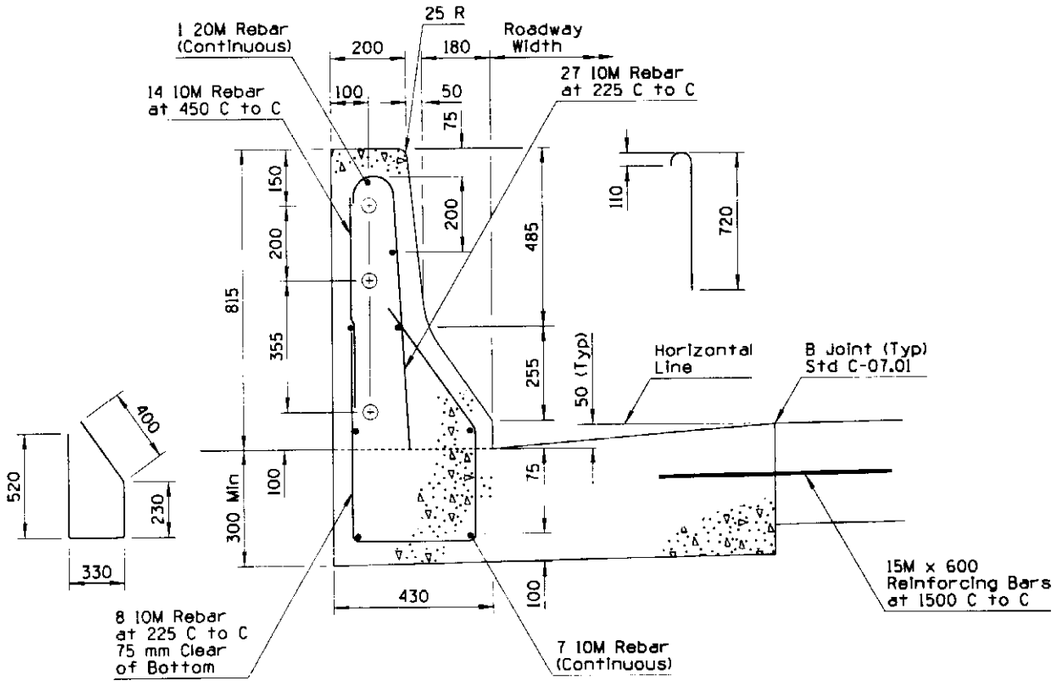

SECTION A-A

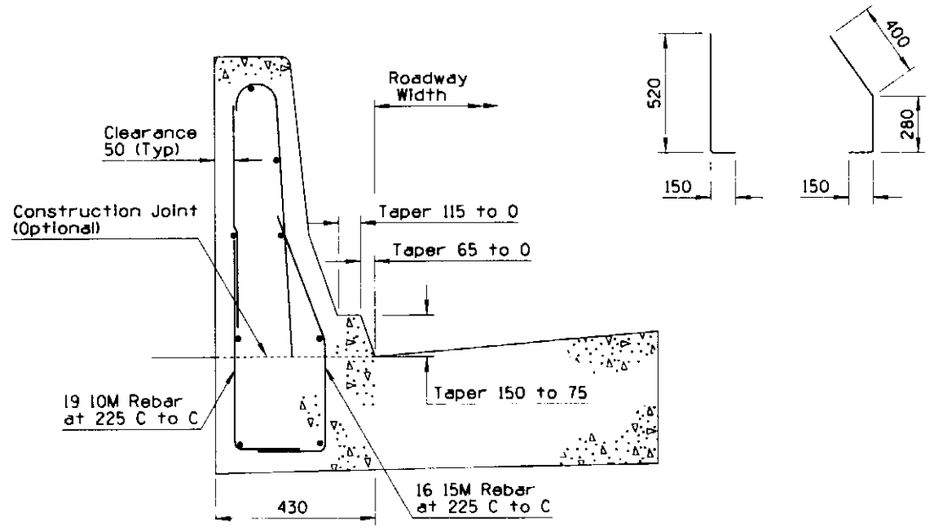

SECTION B-B

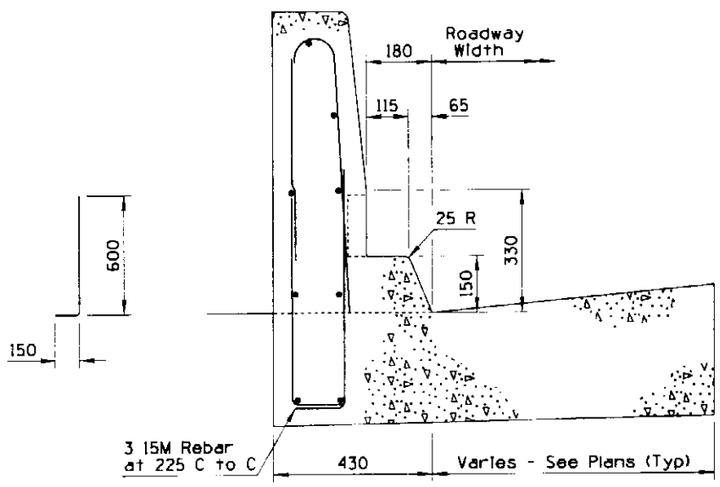

SECTION C-C

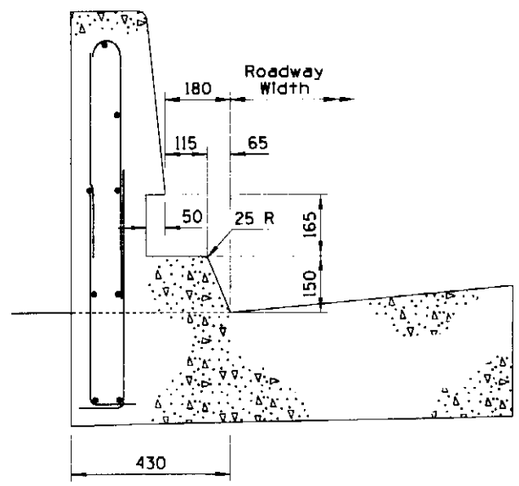

SECTION D-D

DESIGN APPROVED	STATE OF ARIZONA DEPARTMENT OF TRANSPORTATION DIVISION OF HIGHWAYS STANDARD DRAWINGS	ISSUE 6/95
APPROVED FOR DISTRIBUTION	CONCRETE HALF BARRIER TRANSITION	DRAWING NO. C-10.71 Sheet 2 of 3

Metric

NO.	DESCRIPTION OF REVISIONS	MADE BY	DATE
1			
2			
3			

Metric

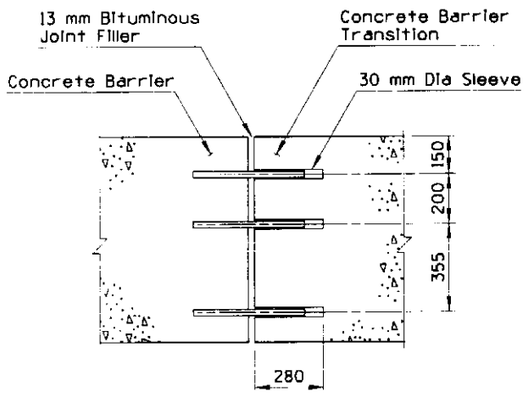

Joint Assembly

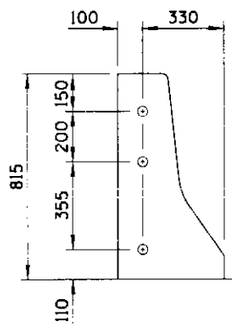

Dowel Locations

DOWEL INSTALLATION
AND CONSTRUCTION JOINT DETAIL

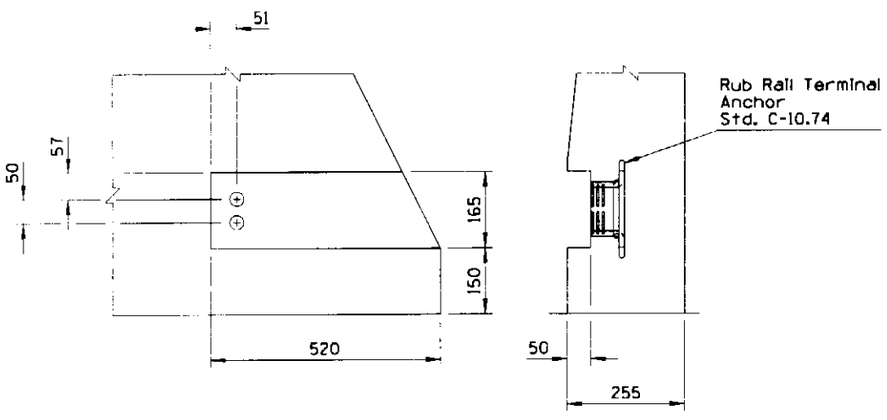

RUB RAIL SLOT DETAIL

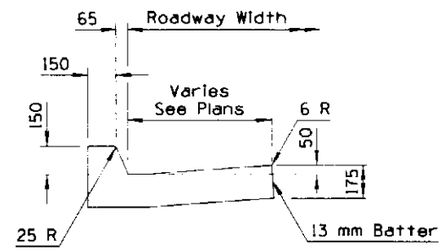

Barrier End

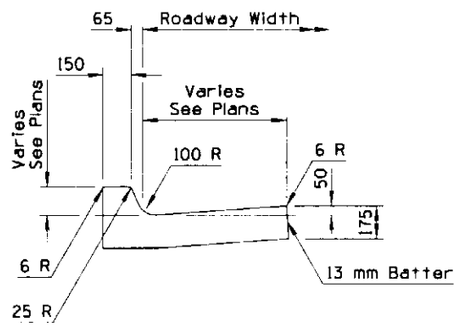

Curb End

CURB TRANSITION DETAIL

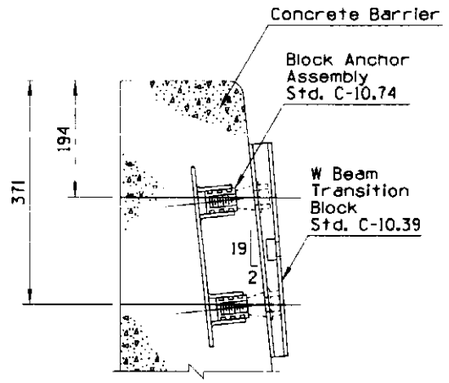

BLOCK AND ANCHORAGE
HALF BARRIER
(BLOCK 2 SHOWN)

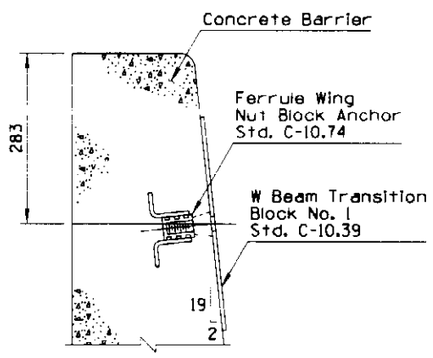

BLOCK AND ANCHORAGE
HALF BARRIER
(BLOCK 1 SHOWN)

DESIGN APPROVED Henry H Otterness	STATE OF ARIZONA DEPARTMENT OF TRANSPORTATION DIVISION OF HIGHWAYS STANDARD DRAWINGS	ISSUE 6/95
APPROVED FOR DISTRIBUTION Ronald A Williams	CONCRETE HALF BARRIER TRANSITION	DRAWING NO. C-10.71 Sheet 3 of 3

Metric

NO.	DESCRIPTION OF REVISIONS	MADE BY	DATE

Metric

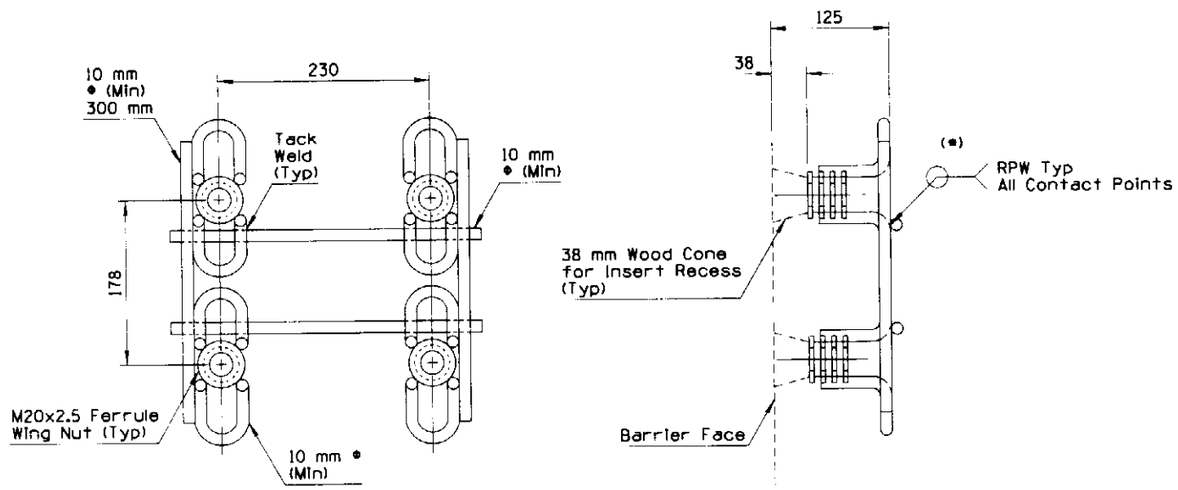

BLOCK ANCHOR ASSEMBLY

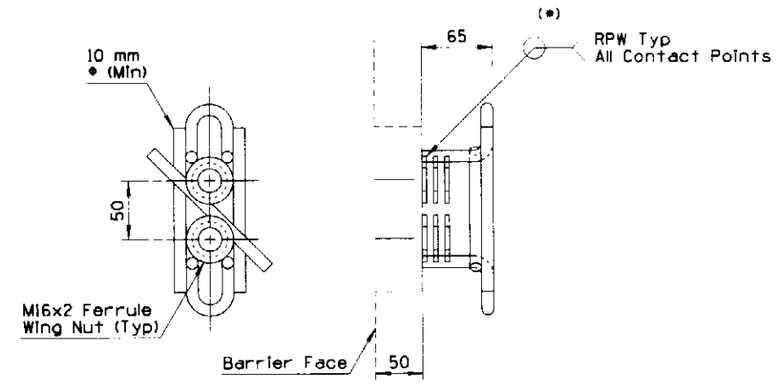

RUB RAIL TERMINAL ANCHOR

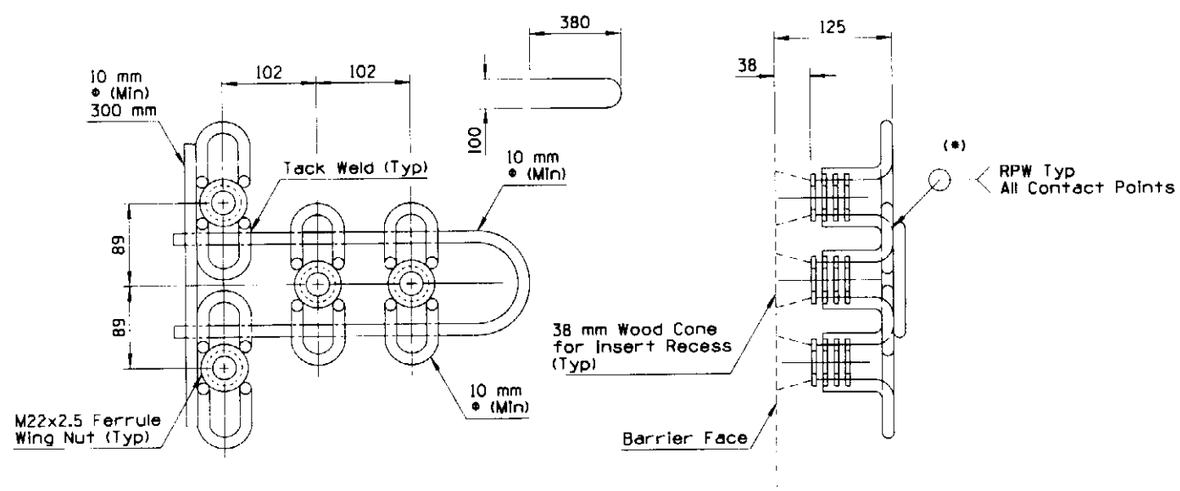

TERMINAL CONNECTOR ANCHOR ASSEMBLY

* Each Weld Shall Develop The Tensile Strength Of The Wire

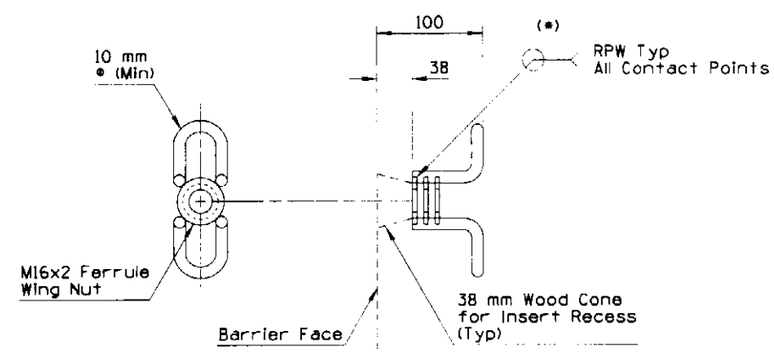

FERRULE WING NUT BLOCK ANCHOR

DESIGN APPROVED Terry H Otterness	STATE OF ARIZONA DEPARTMENT OF TRANSPORTATION DIVISION OF HIGHWAYS STANDARD DRAWINGS	ISSUE 6/95
APPROVED FOR DISTRIBUTION Ronald A Williams	HARDWARE FOR CONCRETE BARRIER TRANSITIONS	DRAWING NO. C-10.74

Metric

NO.	DESCRIPTION OF REVISIONS	MADE BY	DATE
3			
2			
1			

Metric

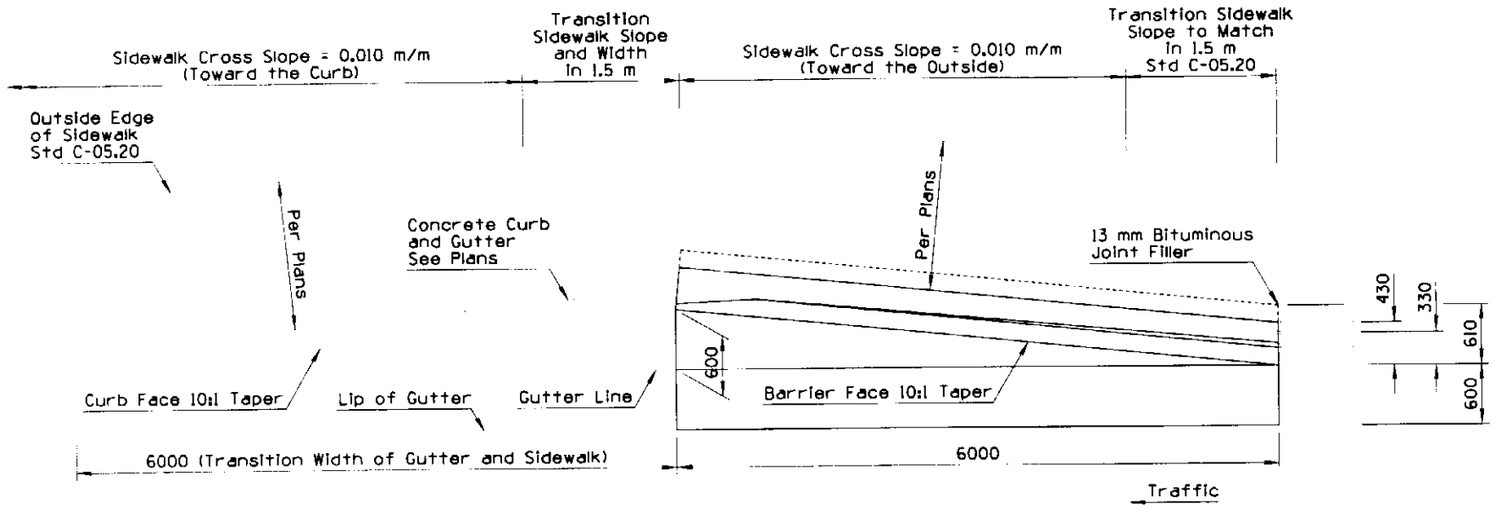

PLAN VIEW

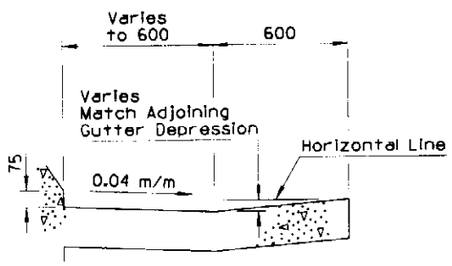

BARRIER GUTTER DETAIL

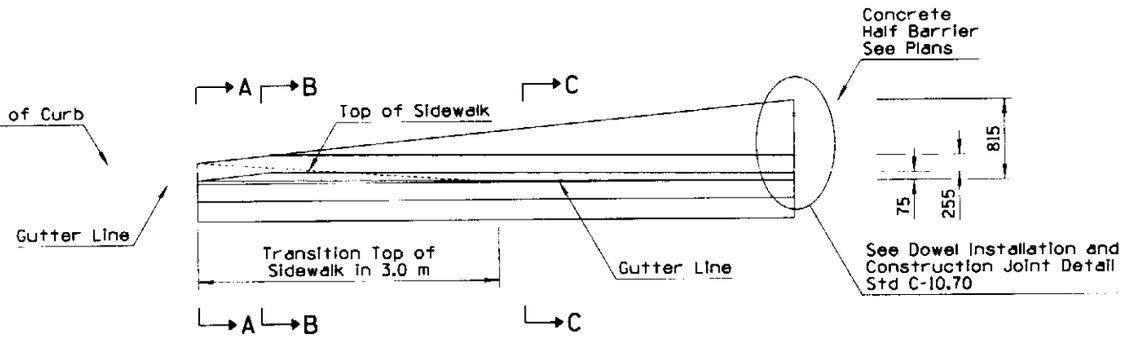

ELEVATION

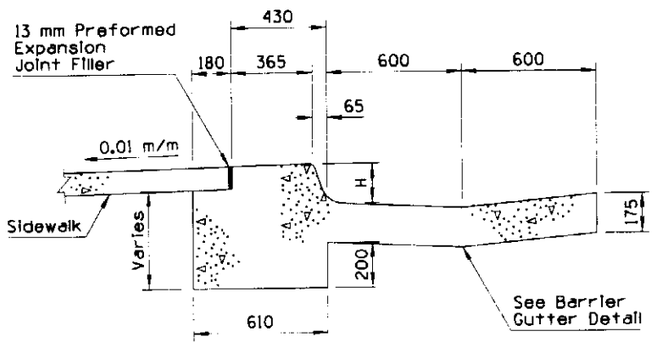

SECTION A-A

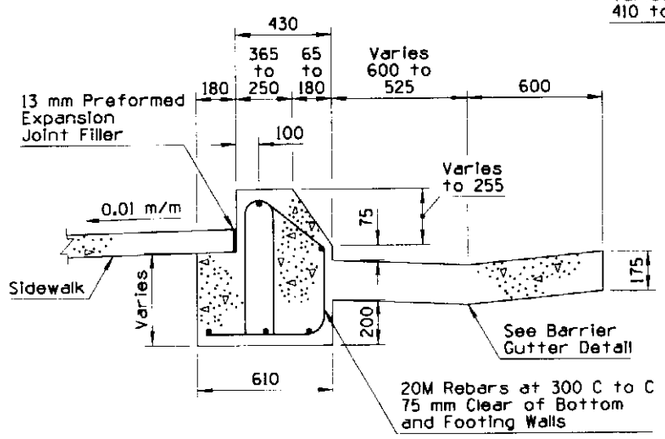

SECTION B-B

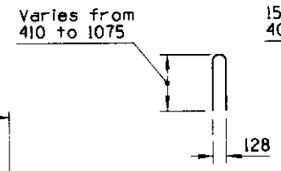

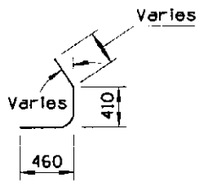

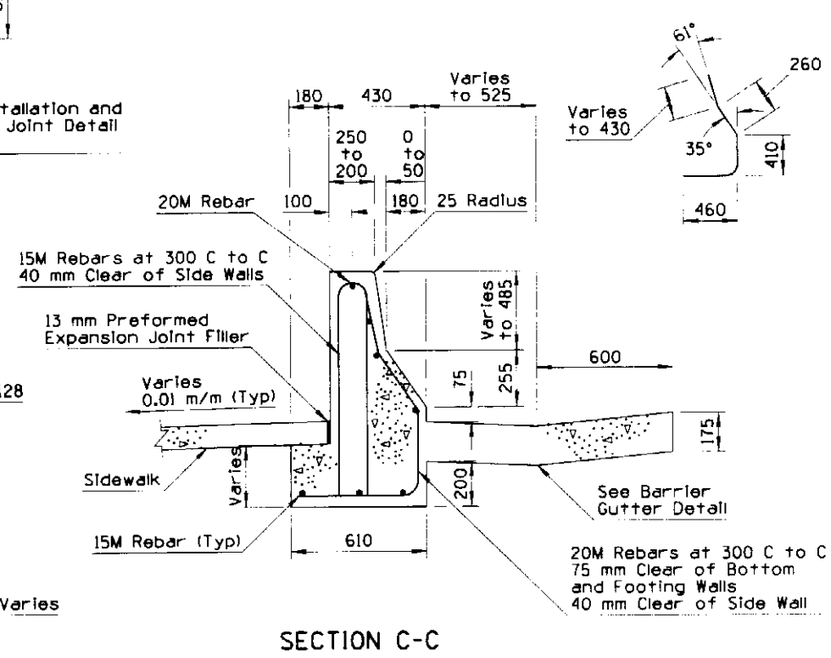

SECTION C-C

GENERAL NOTES

1. All concrete shall be Class "S" (f'c = 20 MPa).
2. All reinforcing steel shall conform to Section 1003.
3. All reinforcing steel shall have 40 mm minimum clear cover unless otherwise noted.
4. See drainage sheets for slotted drain and catch basin details.
5. Barrier transition shall match both adjoining curb and gutter and concrete half barrier.
6. See Std. C-05.20 for sidewalk construction.
7. All bend dimensions for reinforcing steel shall be out-to-out of bars.

DESIGN APPROVED Jerry H. Otterness	STATE OF ARIZONA DEPARTMENT OF TRANSPORTATION DIVISION OF HIGHWAYS STANDARD DRAWINGS	ISSUE 6/95
APPROVED FOR DISTRIBUTION Ronald A. Williams	BARRIER TRANSITION-TANGENT DEPARTURE TYPE 1	DRAWING NO. C-10.75 Sheet 1 of 3

Metric

NO.	DESCRIPTION OF REVISIONS	MADE BY	DATE
1			
2			
3			
4			

Metric

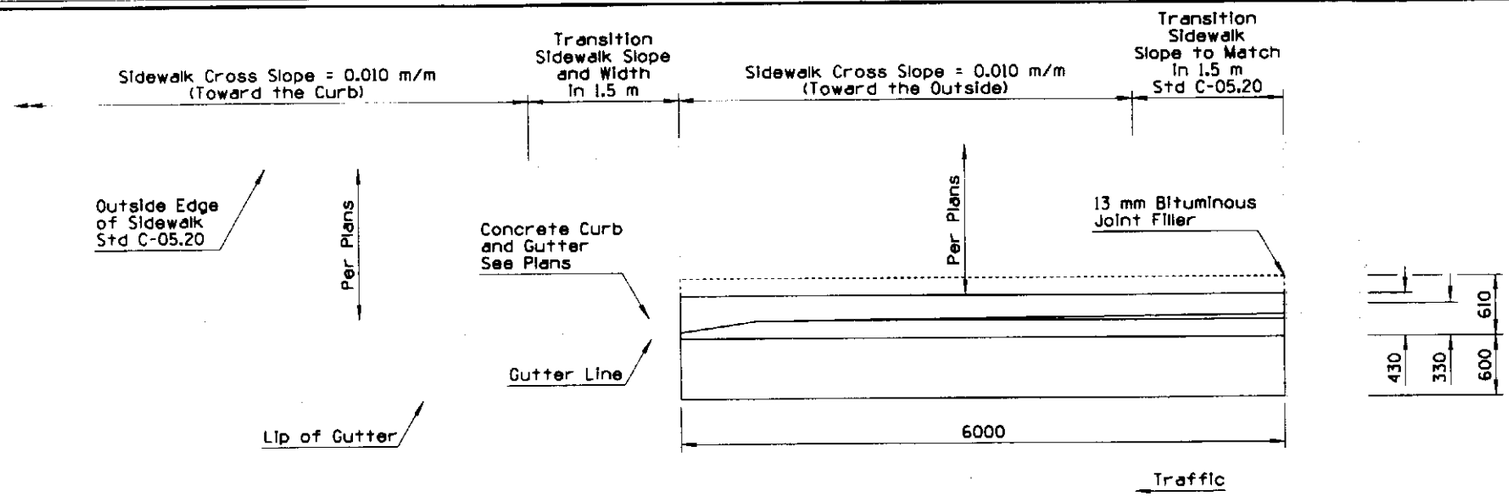

PLAN VIEW

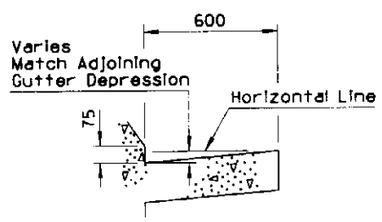

BARRIER GUTTER DETAIL

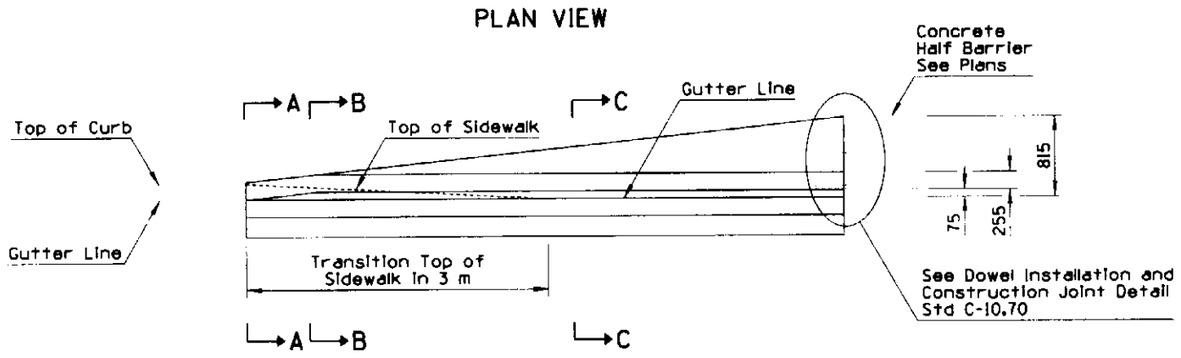

ELEVATION

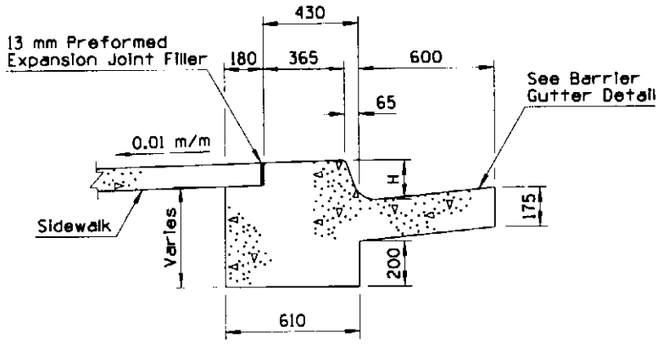

SECTION A-A

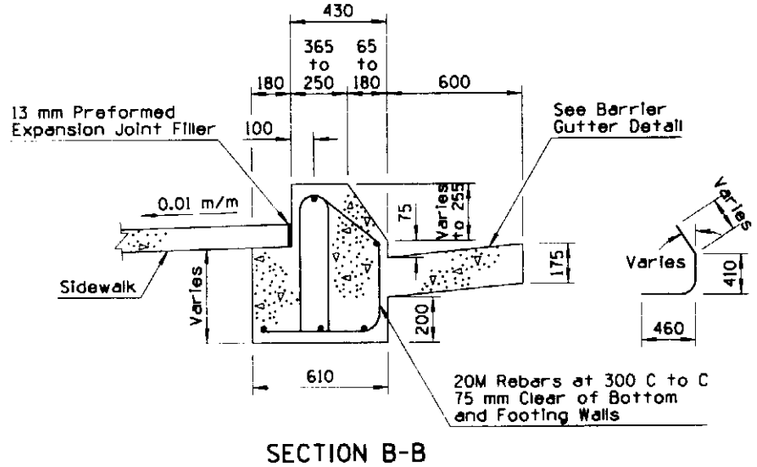

SECTION B-B

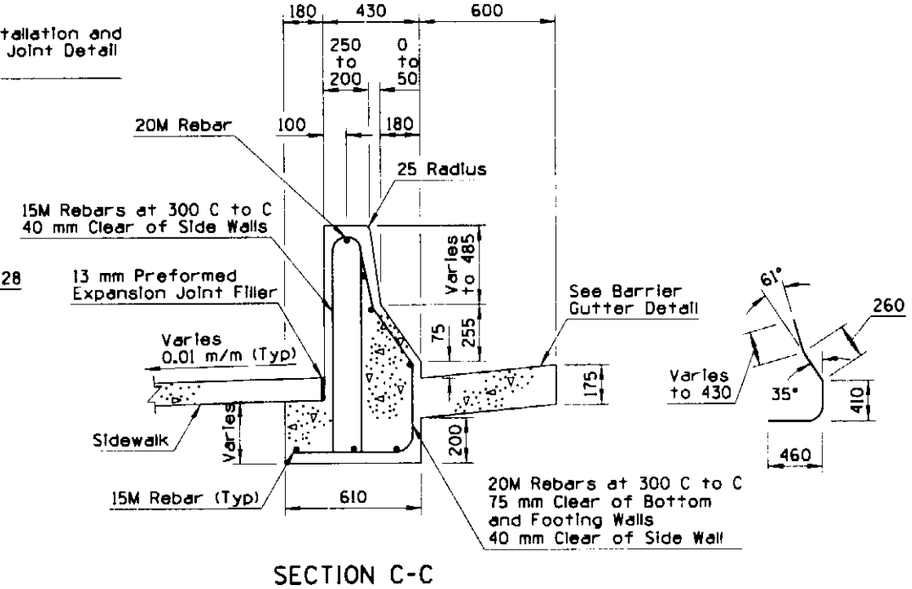

SECTION C-C

GENERAL NOTES

1. All concrete shall be Class "S" (f'c = 20 MPa).
2. All reinforcing steel shall conform to Section 1003.
3. All reinforcing steel shall have 40 mm minimum clear cover unless otherwise noted.
4. See drainage sheets for slotted drain and catch basin details.
5. Barrier transition shall match both adjoining curb and gutter and concrete half barrier.
6. See Std. C-05.20 for sidewalk construction.
7. All bend dimensions for reinforcing steel shall be out-to-out of bars.

DESIGN APPROVED Terry H. Otterness	STATE OF ARIZONA DEPARTMENT OF TRANSPORTATION DIVISION OF HIGHWAYS STANDARD DRAWINGS	ISSUE 6/95
APPROVED FOR DISTRIBUTION Ronald Williams	BARRIER TRANSITION-TANGENT DEPARTURE TYPE 2	DRAWING NO. C-10.75 Sheet 2 of 3

Metric

NO	DESCRIPTION OF REVISIONS	MADE BY	DATE
1			
2			
3			
4			

Metric

GENERAL NOTES

1. All concrete shall be Class "S" (f'c = 20 MPa).
2. All reinforcing steel shall conform to Section 1003.
3. All reinforcing steel shall have 40 mm minimum clear cover unless otherwise noted.
4. See drainage sheets for slotted drain and catch basin details.
5. Barrier transition shall match both adjoining curb and gutter and concrete half barrier.
6. All bend dimensions for reinforcing steel shall be out-to-out of bars.

● Varies - 750 mm, 1350 mm or width as per plans.

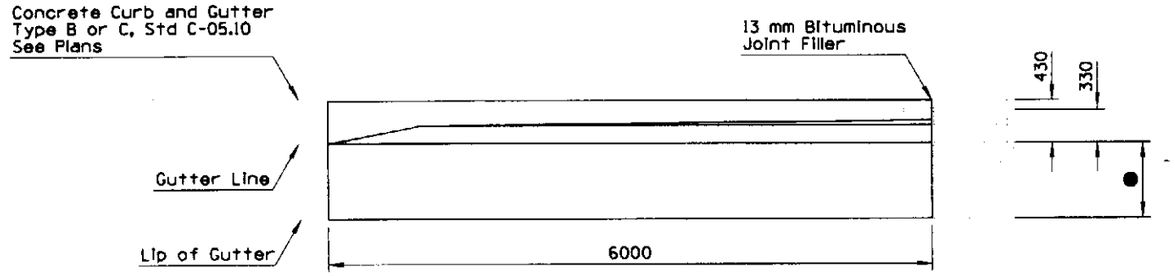

PLAN VIEW

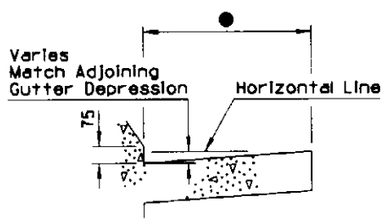

BARRIER GUTTER DETAIL

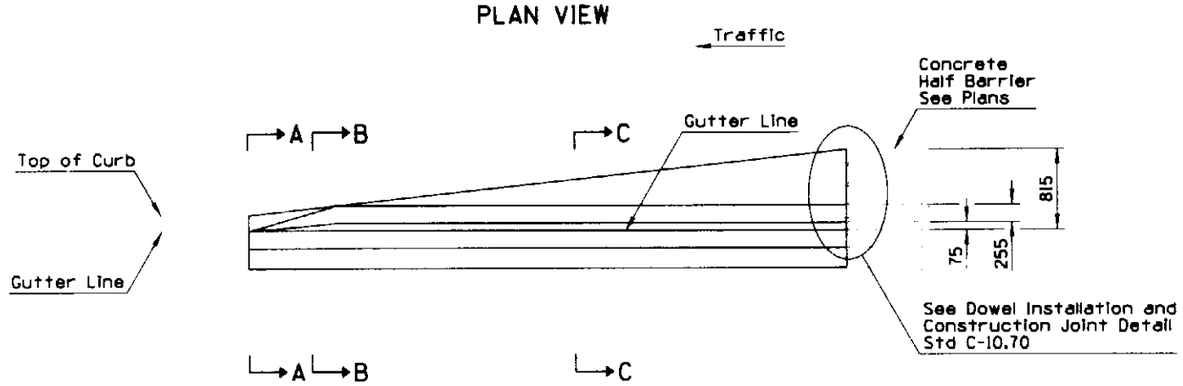

ELEVATION

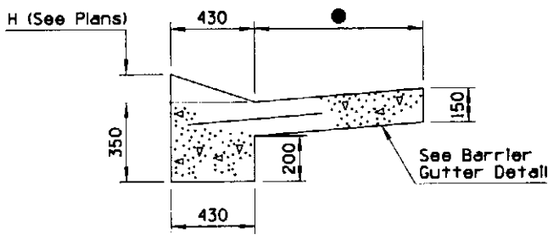

SECTION A-A

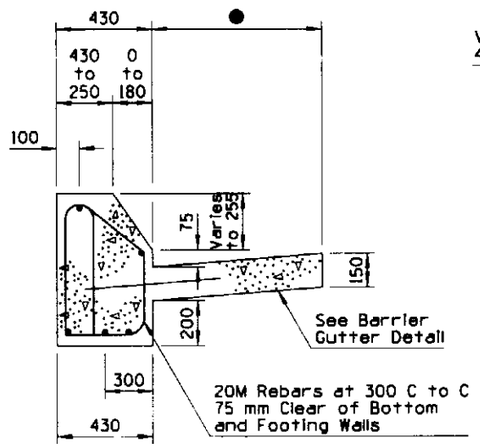

SECTION B-B

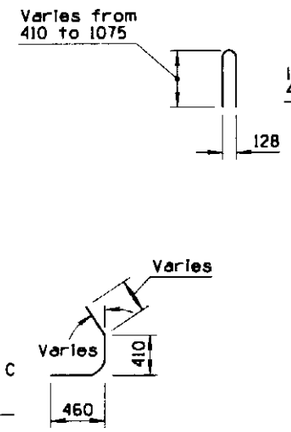

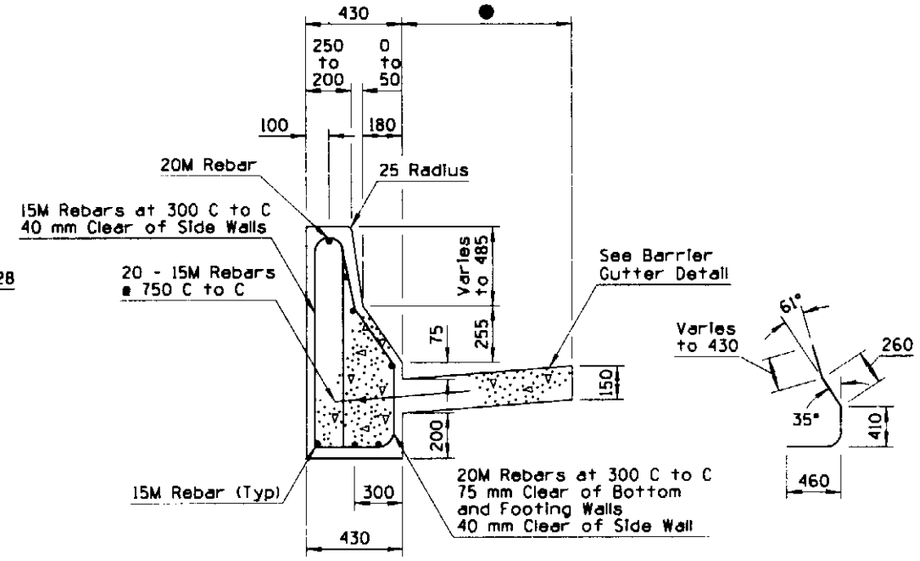

SECTION C-C

DESIGN APPROVED	STATE OF ARIZONA DEPARTMENT OF TRANSPORTATION DIVISION OF HIGHWAYS STANDARD DRAWINGS	ISSUE 6/95
APPROVED FOR DISTRIBUTION	BARRIER TRANSITION-TANGENT DEPARTURE TYPE 3	DRAWING NO. C-10.75 Sheet 3 of 3

Metric

NO	DESCRIPTION OF REVISIONS	MADE BY	DATE
1			
2			
3			
4			

Metric

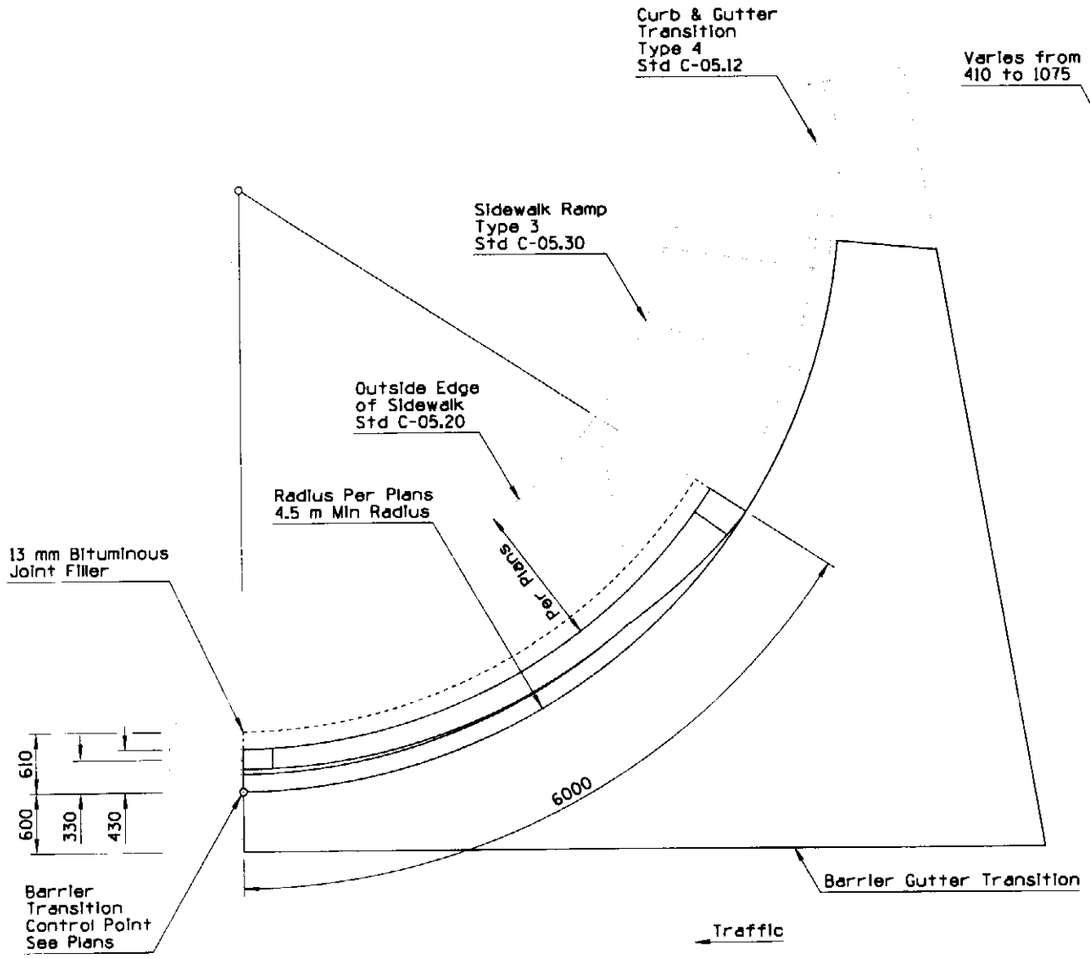

PLAN VIEW

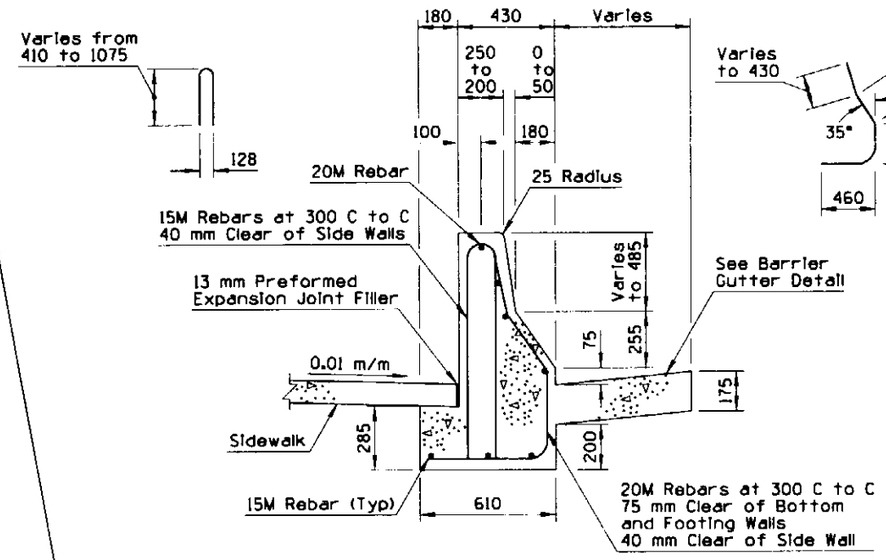

SECTION A-A

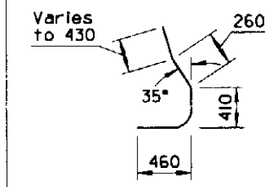

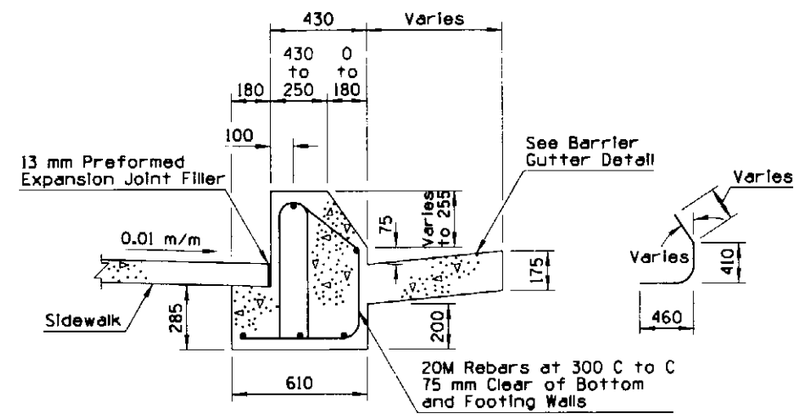

SECTION B-B

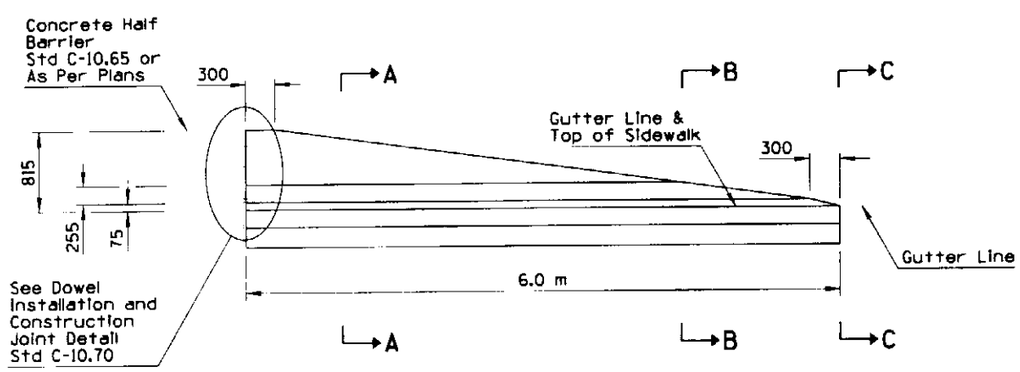

ELEVATION

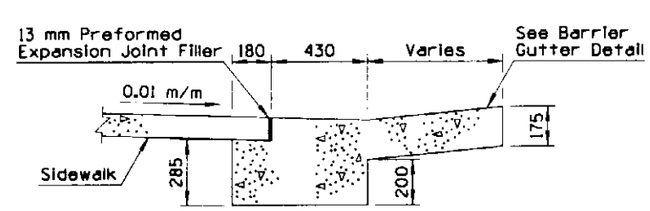

SECTION C-C

GENERAL NOTES

1. All concrete shall be Class "S" (f'c = 20 MPa).
2. All reinforcing steel shall conform to Section 1003.
3. All reinforcing steel shall have 40 mm minimum clear cover unless otherwise noted.
4. See drainage sheets for slotted drain and catch basin details.
5. Barrier transition shall match the adjoining concrete half barrier.
6. See Std. C-05.20 for sidewalk construction.
7. All bend dimensions for reinforcing steel shall be out-to-out of bars.

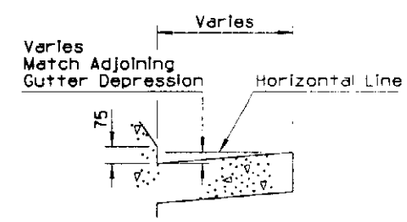

BARRIER GUTTER DETAIL

DESIGN APPROVED	STATE OF ARIZONA DEPARTMENT OF TRANSPORTATION DIVISION OF HIGHWAYS STANDARD DRAWINGS	ISSUE 6/95
APPROVED FOR DISTRIBUTION	BARRIER TRANSITION CURVE	DRAWING NO. C-10.76

Metric

NO	DESCRIPTION OF REVISIONS	MADE BY	DATE
1			
2			
3			
4			

Metric

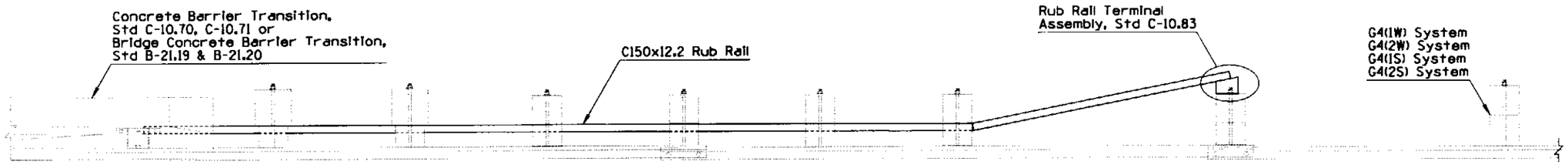

PLAN

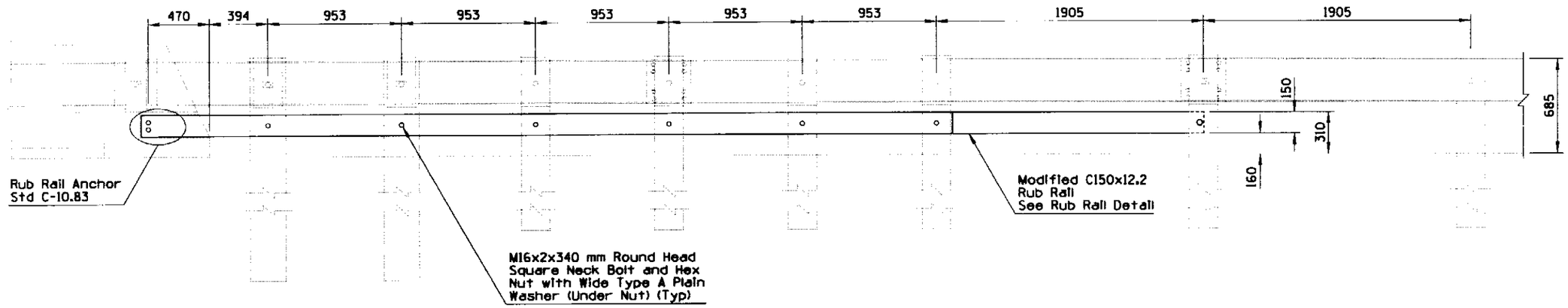

ELEVATION - TIMBER POST

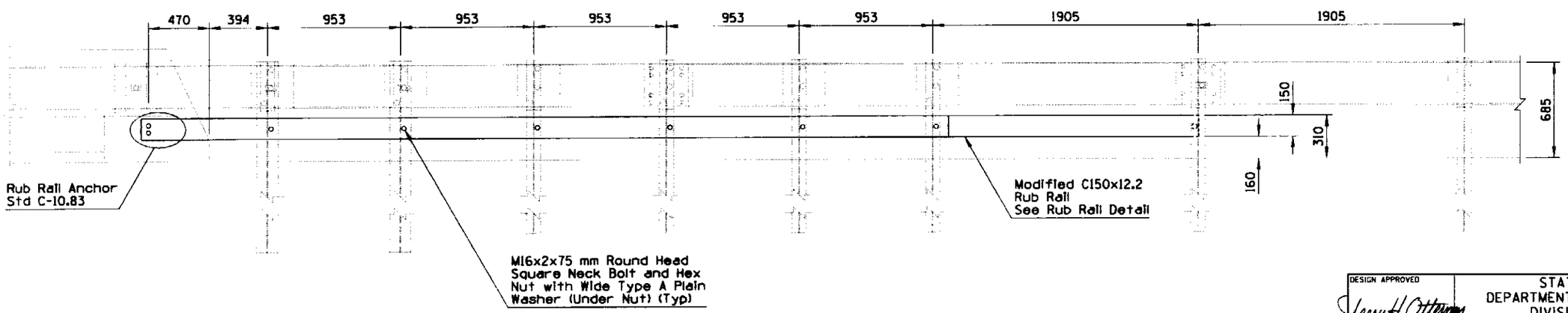

ELEVATION - STEEL POST

DESIGN APPROVED	STATE OF ARIZONA DEPARTMENT OF TRANSPORTATION DIVISION OF HIGHWAYS STANDARD DRAWINGS	ISSUE 6/95
APPROVED FOR DISTRIBUTION	RUB RAIL	DRAWING NO. C-10.80 Sheet 1 of 2

Metric

NO	DESCRIPTION OF REVISIONS	MADE BY	DATE

Metric

GENERAL NOTES

1. All slots in rub rail are 18x51 mm.
   All square holes are 18 mm.

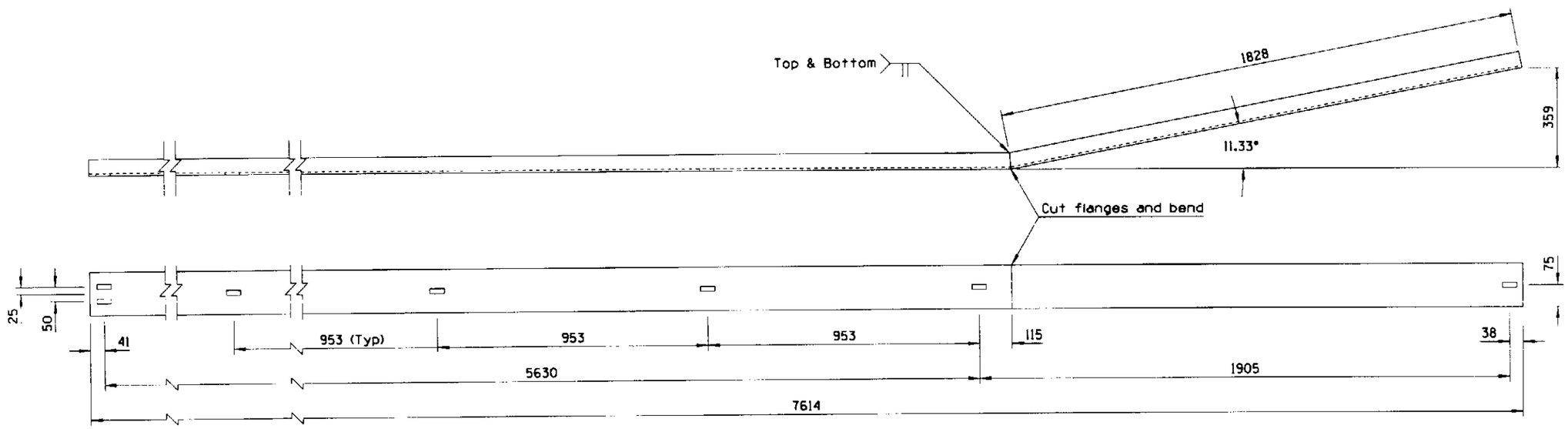

MODIFIED C150x12.2 RUB RAIL DETAIL

DESIGN APPROVED	STATE OF ARIZONA DEPARTMENT OF TRANSPORTATION DIVISION OF HIGHWAYS STANDARD DRAWINGS	ISSUE 6/95
APPROVED FOR DISTRIBUTION	RUB RAIL	DRAWING NO. C-10.80 Sheet 2 of 2

Metric

NO	DESCRIPTION OF REVISIONS	MADE BY	DATE
3			
2			
1			

Metric

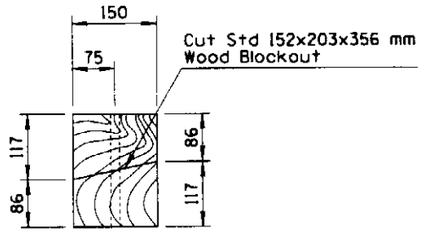

PLAN
RUB RAIL BACK BLOCKOUT DETAIL

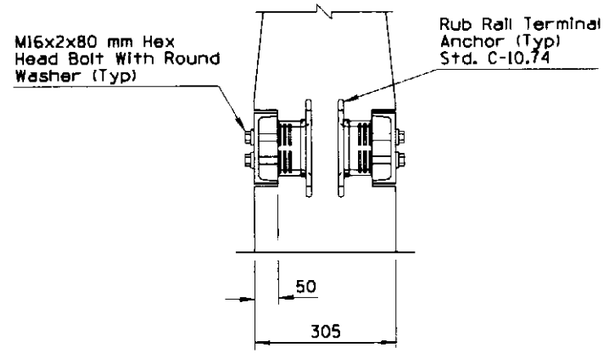

Median Barrier

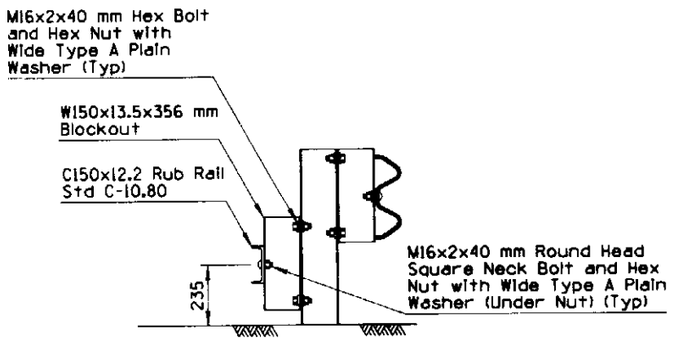

SECTION

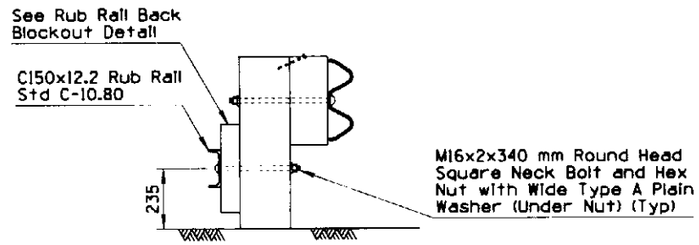

SECTION

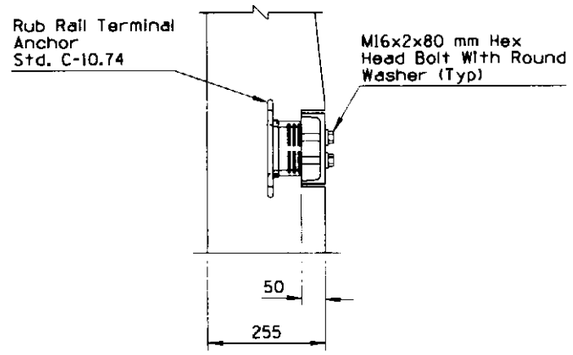

Half Barrier

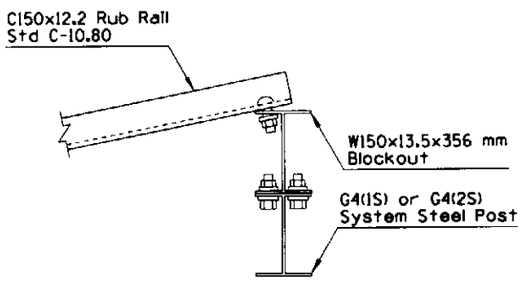

PLAN
STEEL POST

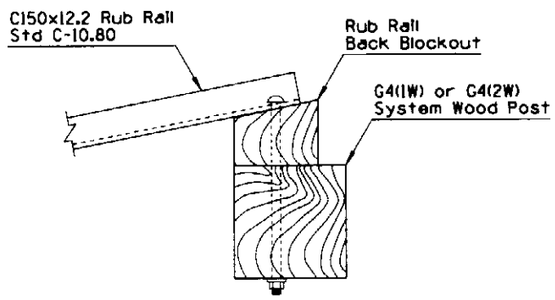

PLAN
TIMBER POST

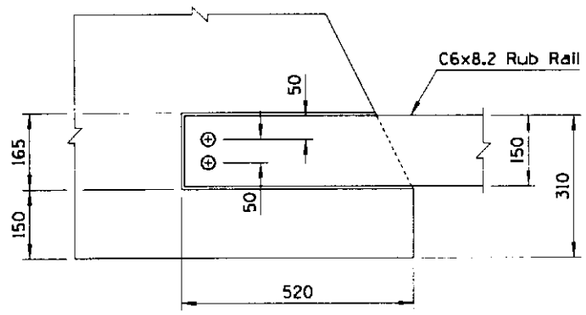

Elevation
RUB RAIL ANCHOR

RUB RAIL TERMINAL ASSEMBLY

DESIGN APPROVED	STATE OF ARIZONA DEPARTMENT OF TRANSPORTATION DIVISION OF HIGHWAYS STANDARD DRAWINGS	ISSUE 6/95
APPROVED FOR DISTRIBUTION	HARDWARE FOR RUB RAIL	DRAWING NO. C-10.83

Metric

NO	DESCRIPTION OF REVISIONS	MADE BY	DATE
1			
2			
3			
4			

Metric

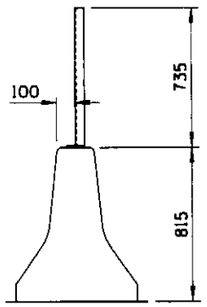

Glare Screen
Installation on
Standard Median Barrier

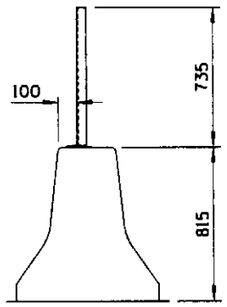

Glare Screen
Installation on
Median Barrier Transition

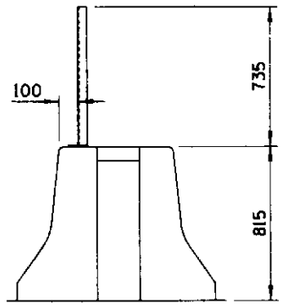

Glare Screen
Installation on
Half Barrier at Bridge Pier

GENERAL NOTES

1. Posts shall be 3810 mm C to C. Structural steel shall conform to ASTM A 36/A 36M, galvanized ASTM A 123.
2. Hex head bolt shall conform to ASTM A 307, galvanized ASTM A 153 Class C.
3. Helical spring lock washer shall conform to ASTM A 313, galvanized ASTM A 153 Class C.
4. Tension wire: 3.77 mm thick, galvanized to conform to ASTM A 116 Class 2.
5. Hog ring: 2.68 mm thick, galvanized ASTM A 116 Class 2. Fasten glare screen to top and bottom tension wire spaced approximately 600 mm apart.
6. Glare Screen: 1.21 mm thick steel, galvanized ASTM A 653/A 653M (coating Z700), expanded to the following dimensions: 34 mm shortway of diamond and 102 mm longway of diamond (center to center of bridges) with a strand width of 6 mm angled at approximately 20° to the plane of the original sheet. Top edge to be shop curled and crimped on 300 mm centers. Glare screen shall be installed such that flat portion of screen blocks light from headlights. See Direction Detail.
7. Splices allowed in glare screen at posts only, with one full diamond overlap.
8. Glare screen shall be constructed without interruption to the greatest degree possible.

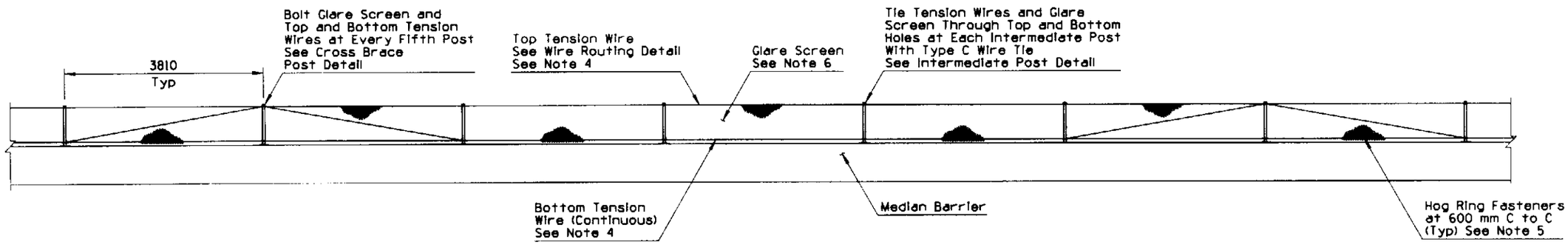

ELEVATION

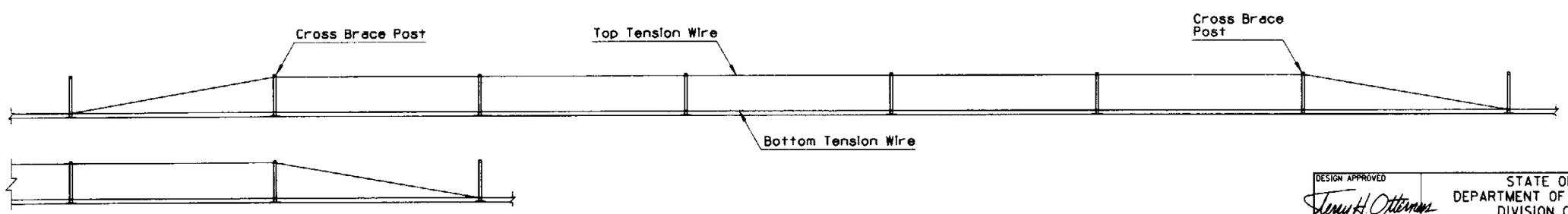

TENSION WIRE ROUTING DETAIL

DESIGN APPROVED *Terry H. Otterness*	STATE OF ARIZONA DEPARTMENT OF TRANSPORTATION DIVISION OF HIGHWAYS STANDARD DRAWINGS	ISSUE 6/95
APPROVED FOR DISTRIBUTION *Ronald A. Williams*	GLARE SCREEN CONCRETE MEDIAN BARRIER	DRAWING NO. C-10.97 Sheet 1 of 3

Metric

NO	DESCRIPTION OF REVISIONS	MADE BY	DATE
1			
2			
3			
4			

Metric

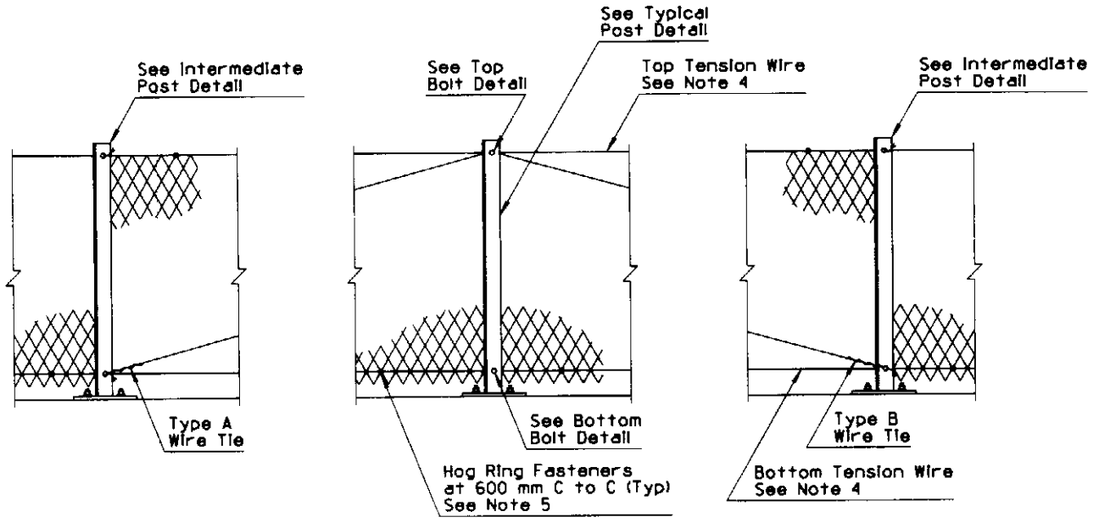

CROSS BRACE POST DETAIL

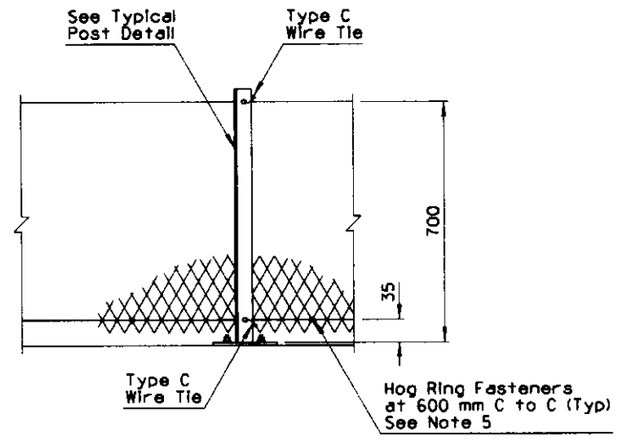

INTERMEDIATE POST DETAIL

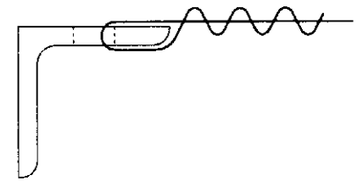

TYPE A WIRE TIE

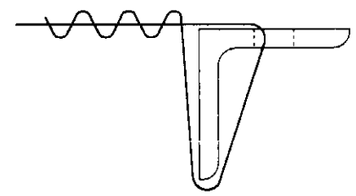

TYPE B WIRE TIE

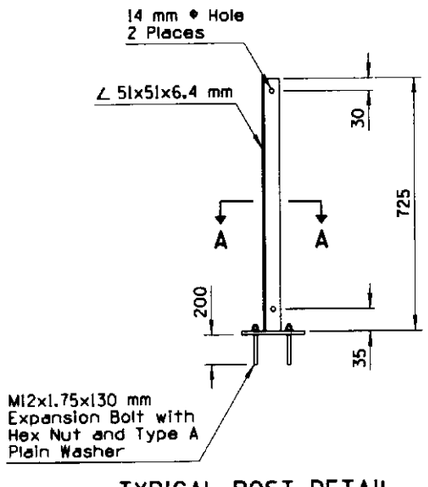

TYPICAL POST DETAIL

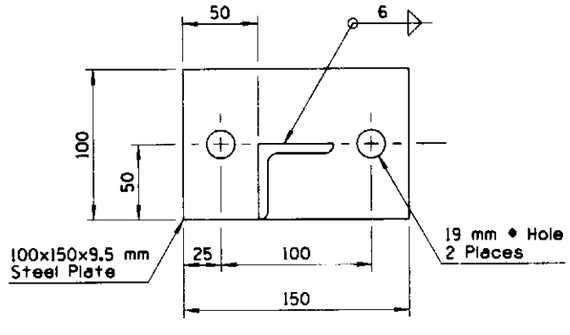

SECTION A-A

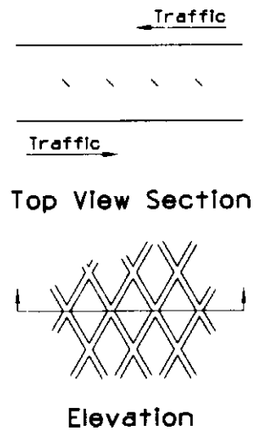

DIRECTION DETAIL

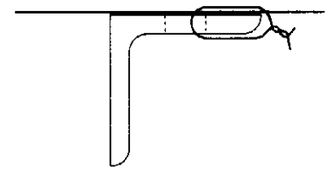

TYPE C WIRE TIE

DESIGN APPROVED Terry H. Ottemar	STATE OF ARIZONA DEPARTMENT OF TRANSPORTATION DIVISION OF HIGHWAYS STANDARD DRAWINGS	ISSUE 6/95
APPROVED FOR DISTRIBUTION Ronald A. Wilson	GLARE SCREEN CONCRETE MEDIAN BARRIER	DRAWING NO. C-10.97 Sheet 2 of 3

Metric

NO	DESCRIPTION OF REVISIONS	MADE BY	DATE
1			
2			
3			
4			

Metric

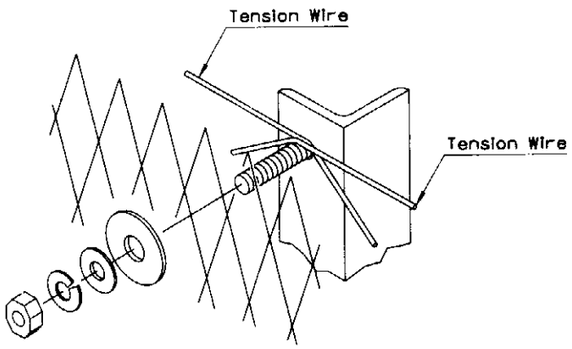

TOP BOLT DETAIL

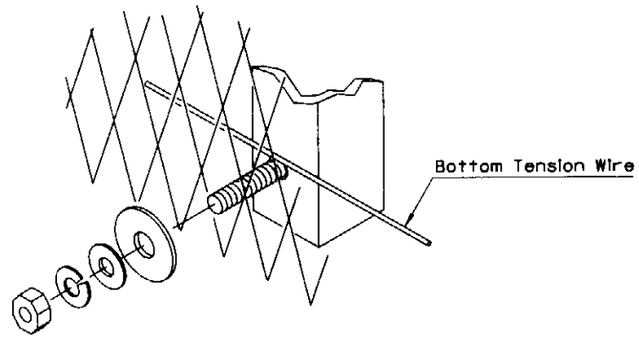

BOTTOM BOLT DETAIL

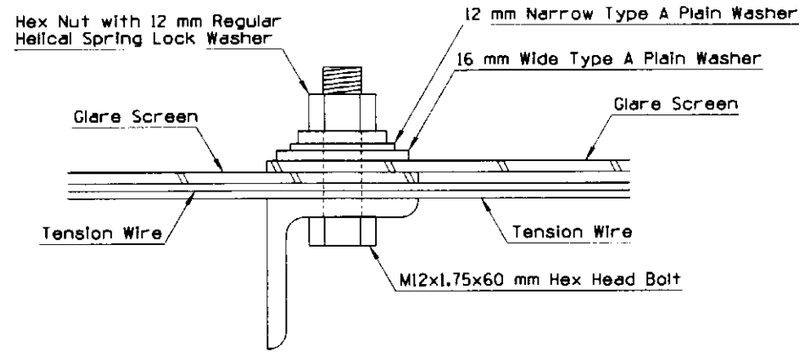

TOP BOLT SECTION

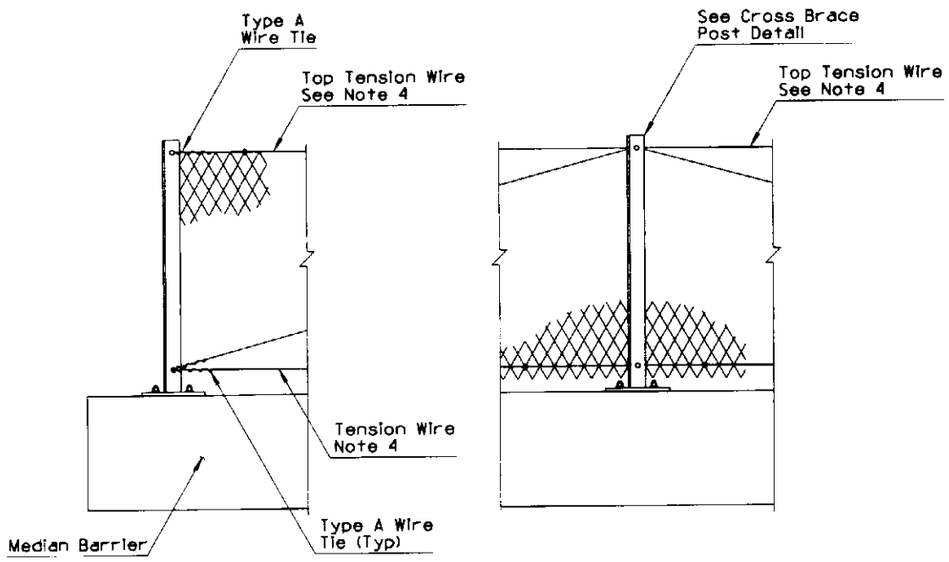

TERMINATION DETAIL

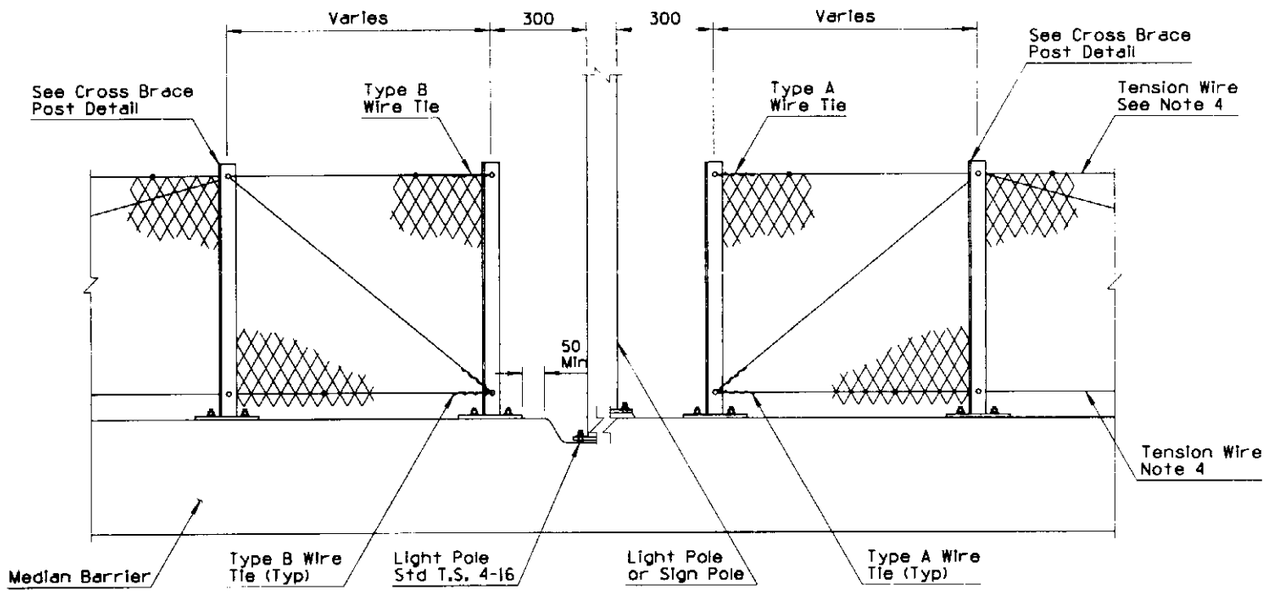

OBSTRUCTION DETAIL

DESIGN APPROVED	STATE OF ARIZONA DEPARTMENT OF TRANSPORTATION DIVISION OF HIGHWAYS STANDARD DRAWINGS	ISSUE 6/95
APPROVED FOR DISTRIBUTION	GLARE SCREEN CONCRETE MEDIAN BARRIER	DRAWING NO. C-10.97 Sheet 3 of 3

Metric

NO	DESCRIPTION OF REVISIONS	MADE BY	DATE

Metric

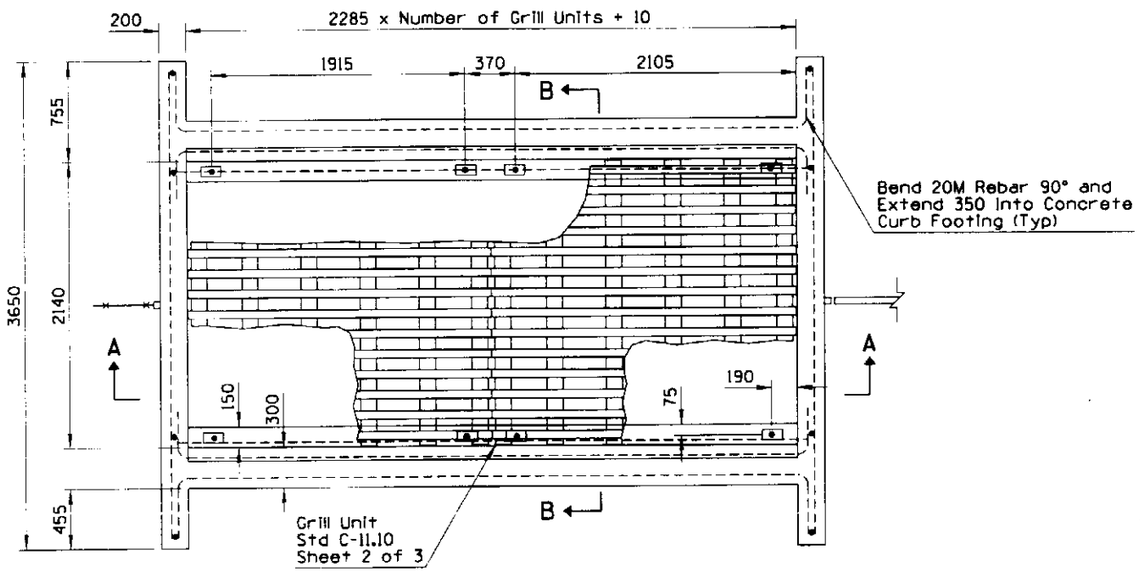

PLAN

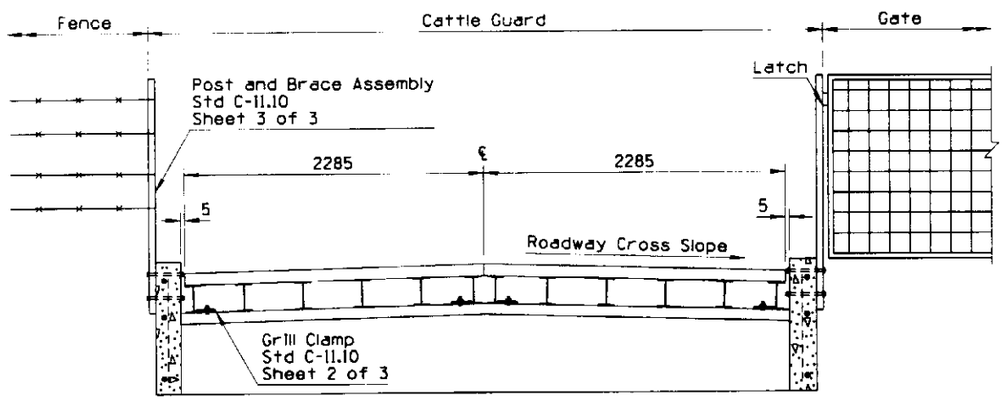

SECTION A-A

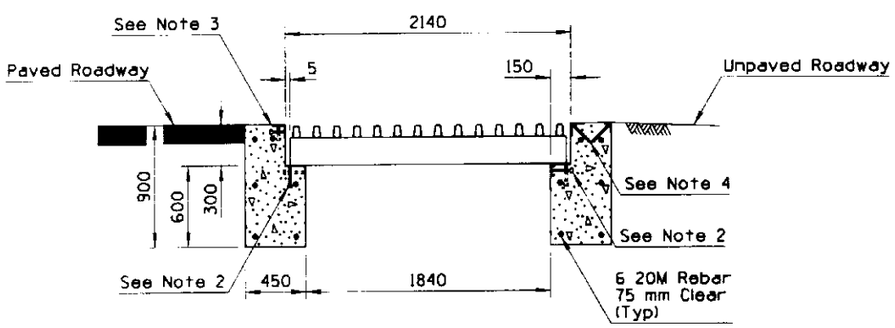

SECTION B-B

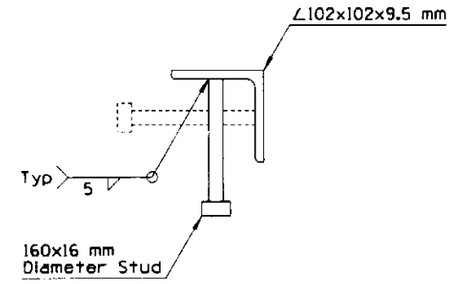

ANGLE ASSEMBLY DETAIL NO. 1

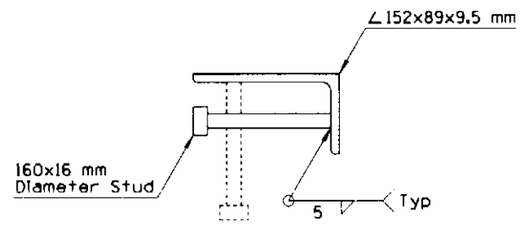

ANGLE ASSEMBLY DETAIL NO. 2

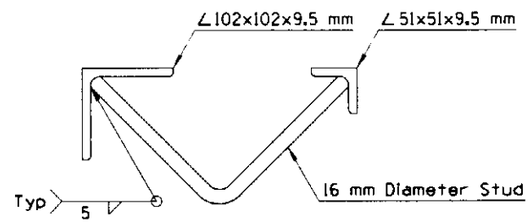

ANGLE ASSEMBLY DETAIL NO. 3

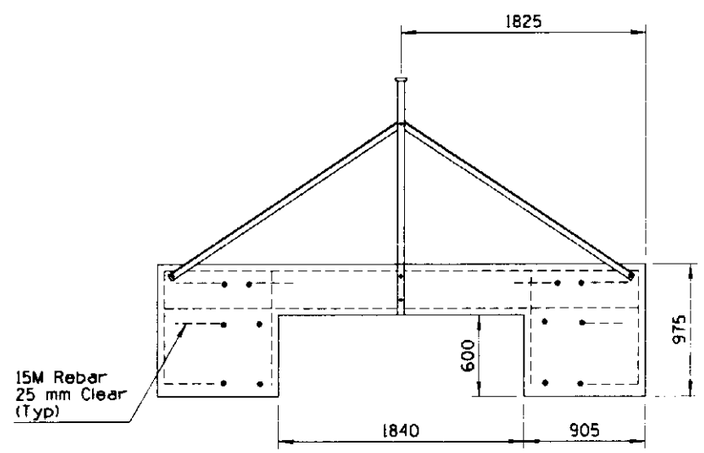

END VIEW

GENERAL NOTES

1. Cattle guard shall be sloped to conform to the roadway grade and cross section, except that where an odd number of grill units is specified in a crowned roadway, the center grill unit shall be installed level.
2. Grill units shall be set on an angle assembly consisting of one 152x89x9.5 mm angle and 16 mm diameter studs with head. The studs shall be placed on 305 mm alternate centers. See Angle Assembly Detail No. 2.
3. Where the adjacent roadway is paved, an angle assembly shall consist of one 102x102x9.5 mm angle and 16 mm diameter studs with head. The studs shall be placed on 305 mm alternate centers. See Angle Assembly Detail No. 1.
4. Where the adjacent roadway is unpaved, an angle assembly shall consist of one 102x102x9.5 mm angle and one 51x51x9.5 mm angle and connected with 16 mm diameter studs. The assembly shall be crowned at the centerline and constructed with a bevel cut and welded. The studs shall be bent 90° and placed on 305 mm centers. See Angle Assembly Detail No. 3.
5. Each angle and angle assembly shall be fabricated to form a single piece for the full length of the cattle guard.
6. Quantities shown for concrete and reinforcing bars are to be considered approximations for informational purposes only.
7. When guard rail is to be used at the cattle guard, it may be possible to reduce the number of grill units required.

UNIT TABLE

Roadway Width (m)	Grill Units Required	Concrete Cubic Meters	Rebar Kg
3.6	2	4.4	78.6
4.8	3	6.1	109.3
6.0	4	7.9	139.9
8.4	5	9.6	170.6
10.2	6	11.2	201.3
10.8	6	11.2	201.3
11.4	7	12.9	231.9
12.0	7	12.9	231.9

DESIGN APPROVED: Jerry H. Otterness	STATE OF ARIZONA DEPARTMENT OF TRANSPORTATION DIVISION OF HIGHWAYS STANDARD DRAWINGS	ISSUE 6/95
APPROVED FOR DISTRIBUTION: Ronald Williams	ROADWAY CATTLE GUARD	DRAWING NO. C-11.10 Sheet 1 of 3

Metric

NO	DESCRIPTION OF REVISIONS	MADE BY	DATE
1			
2			
3			
4			

Metric

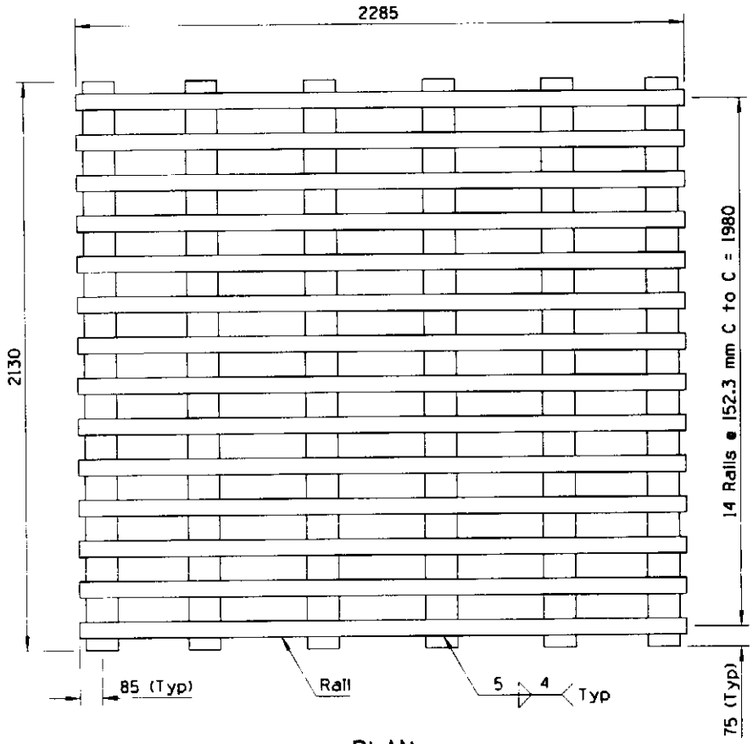

PLAN

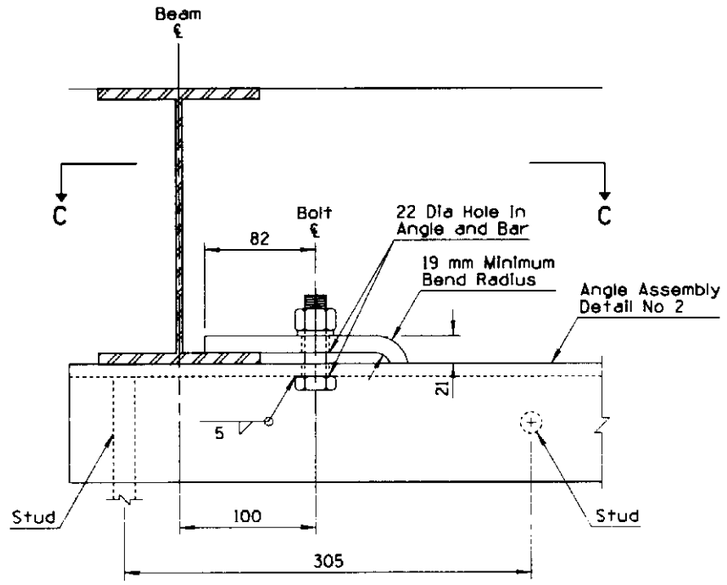

GRILL CLAMP

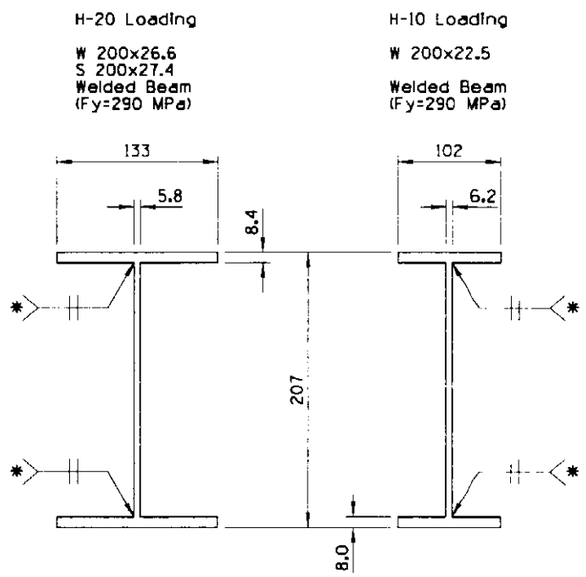

*F.P. flow thru high frequency electrical resistance weld

BEAMS

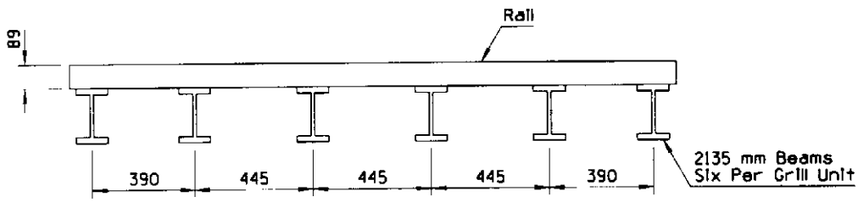

ELEVATION

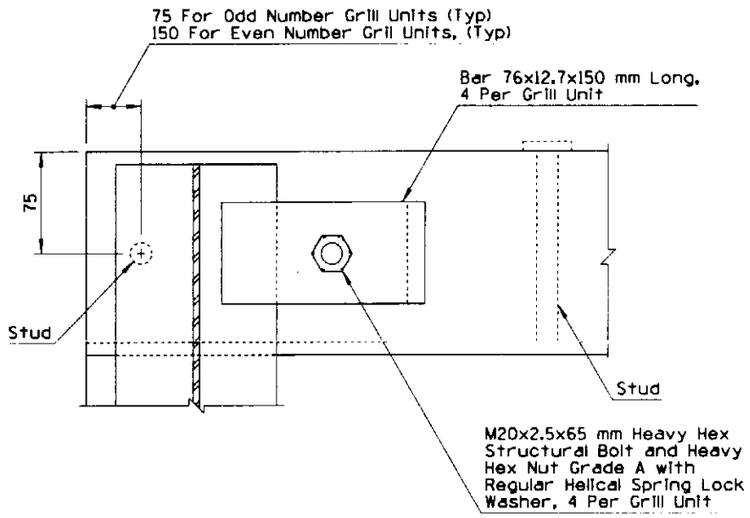

SECTION C-C

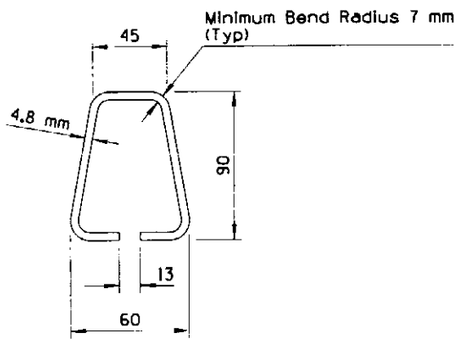

RAIL
GRILL UNIT

DESIGN APPROVED	STATE OF ARIZONA DEPARTMENT OF TRANSPORTATION DIVISION OF HIGHWAYS STANDARD DRAWINGS	ISSUE 6/95
APPROVED FOR DISTRIBUTION	ROADWAY CATTLE GUARD	DRAWING NO. C-11.10 Sheet 2 of 3

Metric

NO	DESCRIPTION OF REVISIONS	MADE BY	DATE
1			
2			
3			
4			

Metric

GENERAL NOTES

1. Material for shoulder transition shall be placed to the finished roadway elevation for the entire length of the transition. When the roadway is paved, Aggregate Subbase or Aggregate Base shall be used. When Roadway is unpaved, a material equivalent to the existing roadway shall be used.

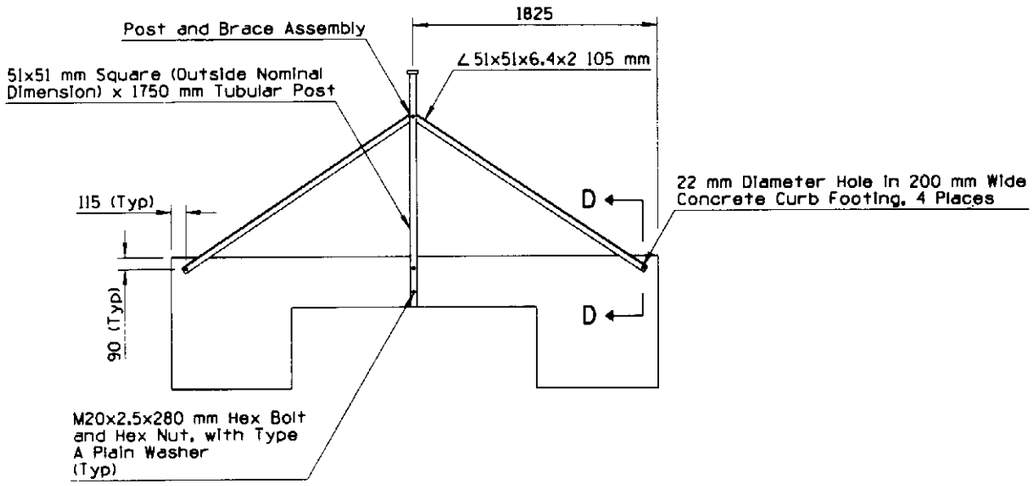

END VIEW

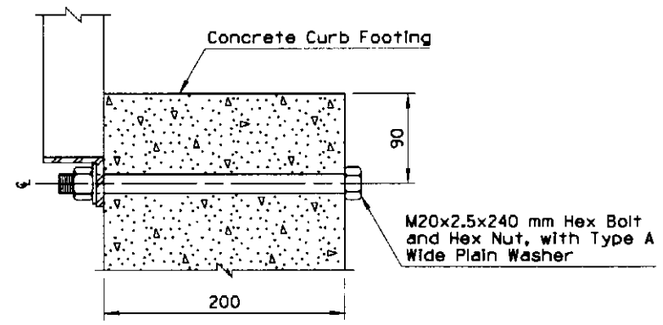

SECTION D-D

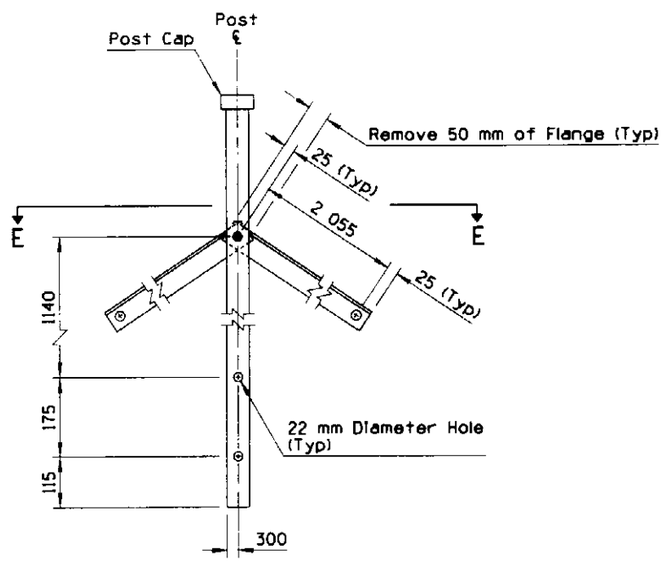

POST AND BRACE ASSEMBLY

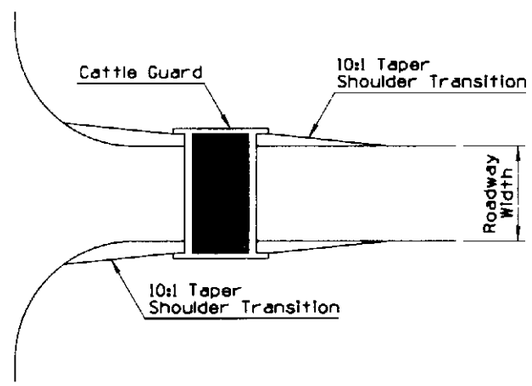

SHOULDER TRANSITION AT CATTLE GUARDS

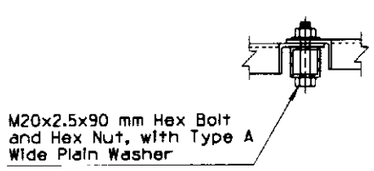

SECTION E-E

DESIGN APPROVED	STATE OF ARIZONA DEPARTMENT OF TRANSPORTATION DIVISION OF HIGHWAYS STANDARD DRAWINGS	ISSUE 6/95
APPROVED FOR DISTRIBUTION	ROADWAY CATTLE GUARD	DRAWING NO C-11.10 Sheet 3 of 3

Metric

NO	DESCRIPTION OF REVISIONS	MADE BY	DATE
1			
2			
3			
4			

Metric

GENERAL NOTES

1. See Std C-11.10 for all other Cattle Guard details.
2. This standard shall be used in embankment or where highly erodable soil is found.
3. All concrete shall be Class B.

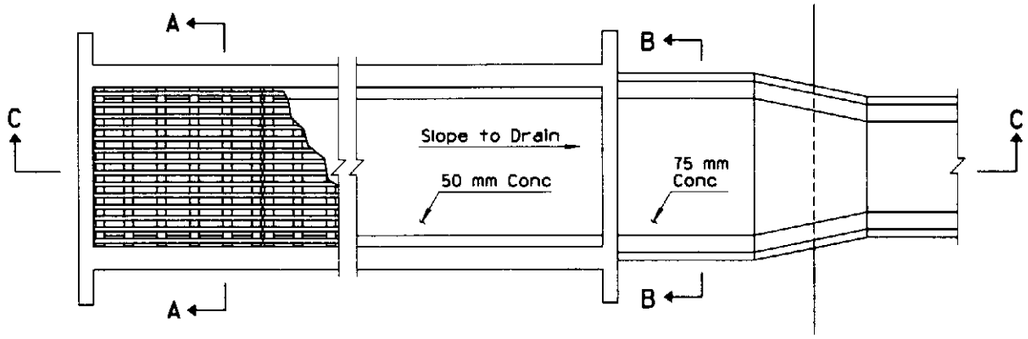

PLAN

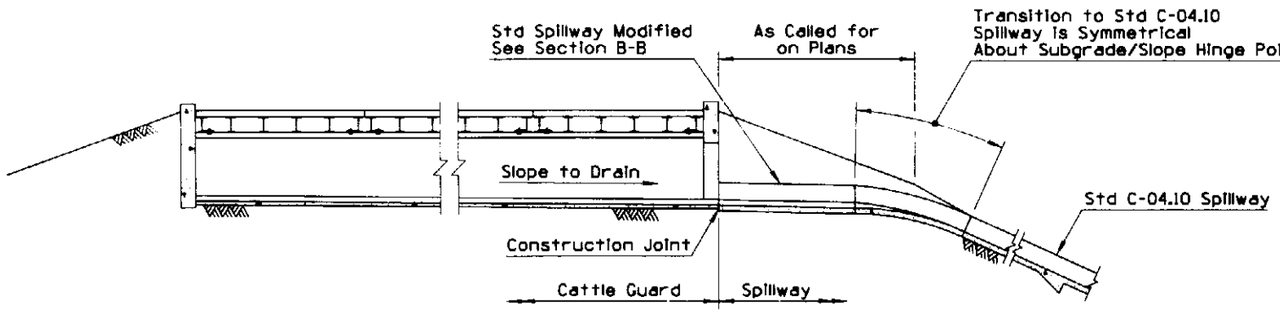

SECTION C-C
IN EMBANKMENT

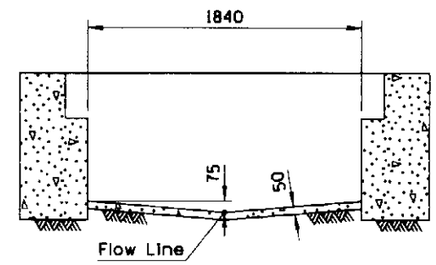

SECTION A-A

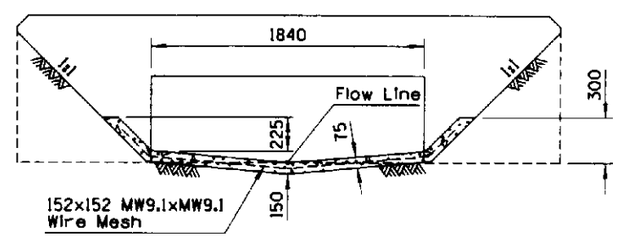

SECTION B-B

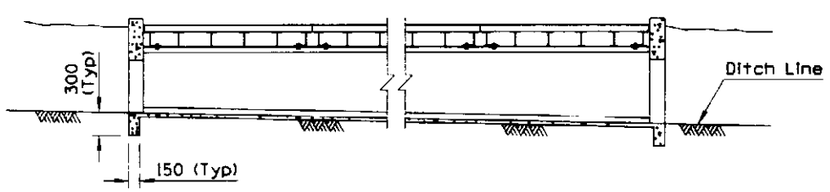

SECTION C-C
WHERE USED FOR THRU DRAINAGE-
CATTLE GUARD OPEN BOTH ENDS

DESIGN APPROVED Jerry H. Otterness	STATE OF ARIZONA DEPARTMENT OF TRANSPORTATION DIVISION OF HIGHWAYS STANDARD DRAWINGS	ISSUE 6/95
APPROVED FOR DISTRIBUTION Ronald E. Williams	CATTLE GUARD, DRAINAGE	DRAWING NO. C-11.20

Metric

NO	DESCRIPTION OF REVISIONS	MADE BY	DATE
1			
2			
3			
4			

Metric

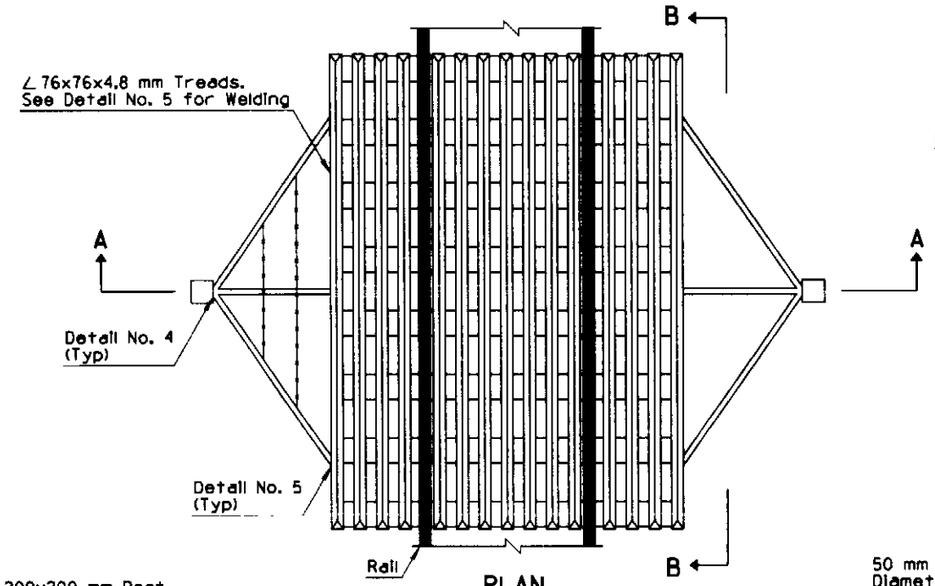

PLAN

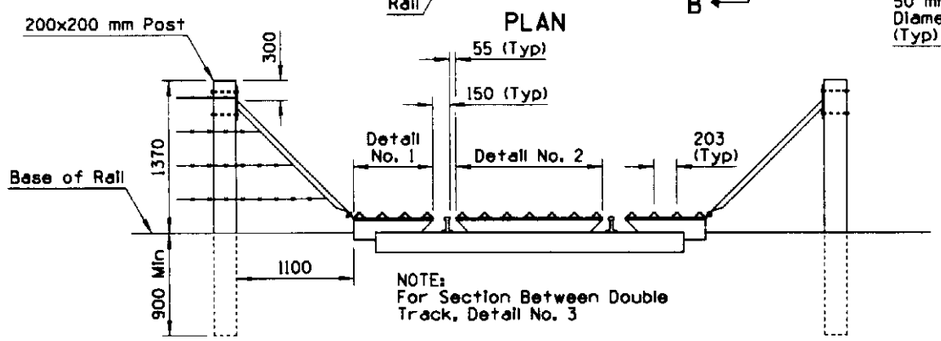

SECTION A-A

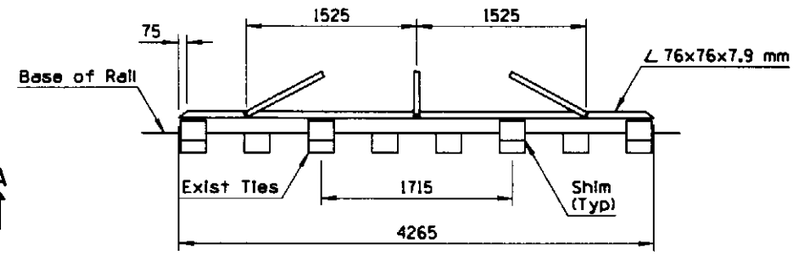

SECTION B-B

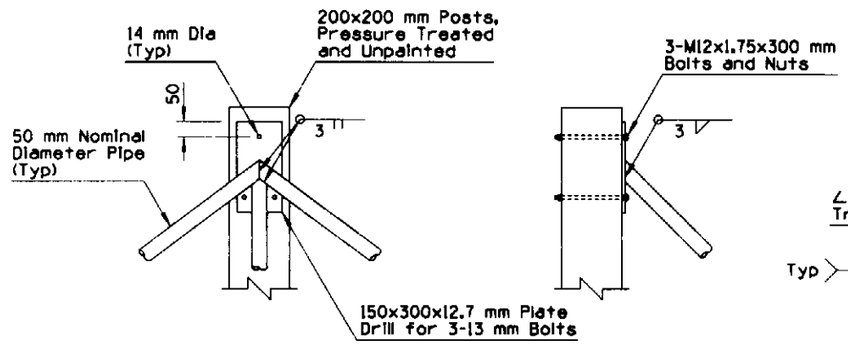

DETAIL NO. 4

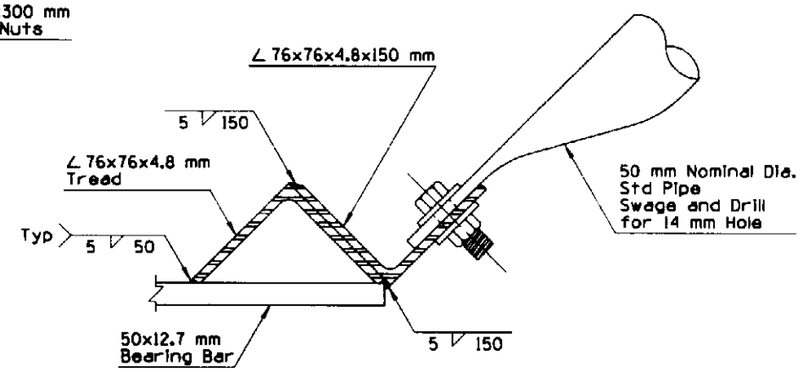

DETAIL NO. 5

GENERAL NOTES

1. This design applicable only to wood tie track construction. Wood shims shall be unpainted and cut from material meeting the specifications of the existing ties.
2. 76x76x4.8 mm treads, 51x12.7 mm bearing bars and 50 mm nominal diameter pipe wing assemblies shall be primed with one coat of No. 1 paint and finished with two coats of yellow enamel paint.

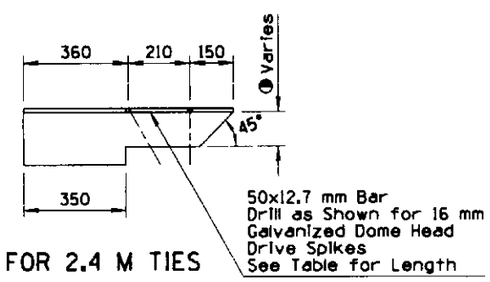

FOR 2.4 M TIES

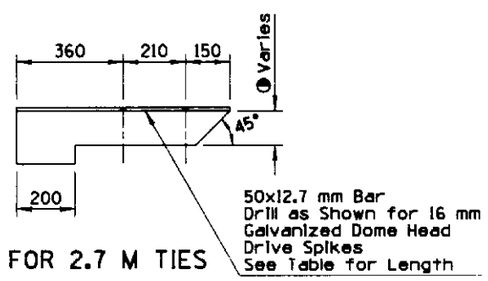

FOR 2.7 M TIES

DETAIL NO. 1

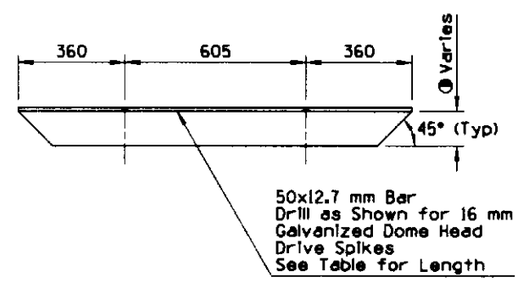

DETAIL NO. 2

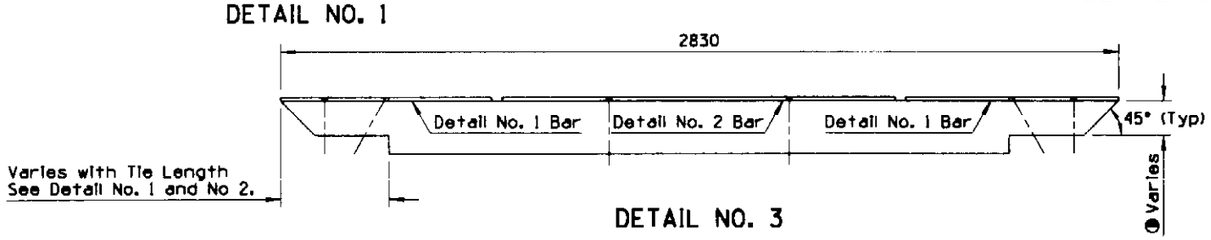

DETAIL NO. 3

	SHIM HEIGHT						
	RAIL						
RAIL WEIGHT Kg/m	39.7	44.6	54.6	57.0	59.0	65.0	74.4
SHIM HEIGHT mm	57	73	89	98	103	111	116
	16 mm DIAMETER GALVANIZED DOME HEAD SPIKE						
SPIKE LENGTH mm	280	280	280	280	330	330	330

DESIGN APPROVED APPROVED FOR DISTRIBUTION	STATE OF ARIZONA DEPARTMENT OF TRANSPORTATION DIVISION OF HIGHWAYS STANDARD DRAWINGS	ISSUE 6/95
	CATTLE GUARD, RAILROAD	DRAWING NO. C-11.30

Metric

NO	DESCRIPTION OF REVISIONS	MADE BY	DATE
1			
2			
3			
4			

Metric

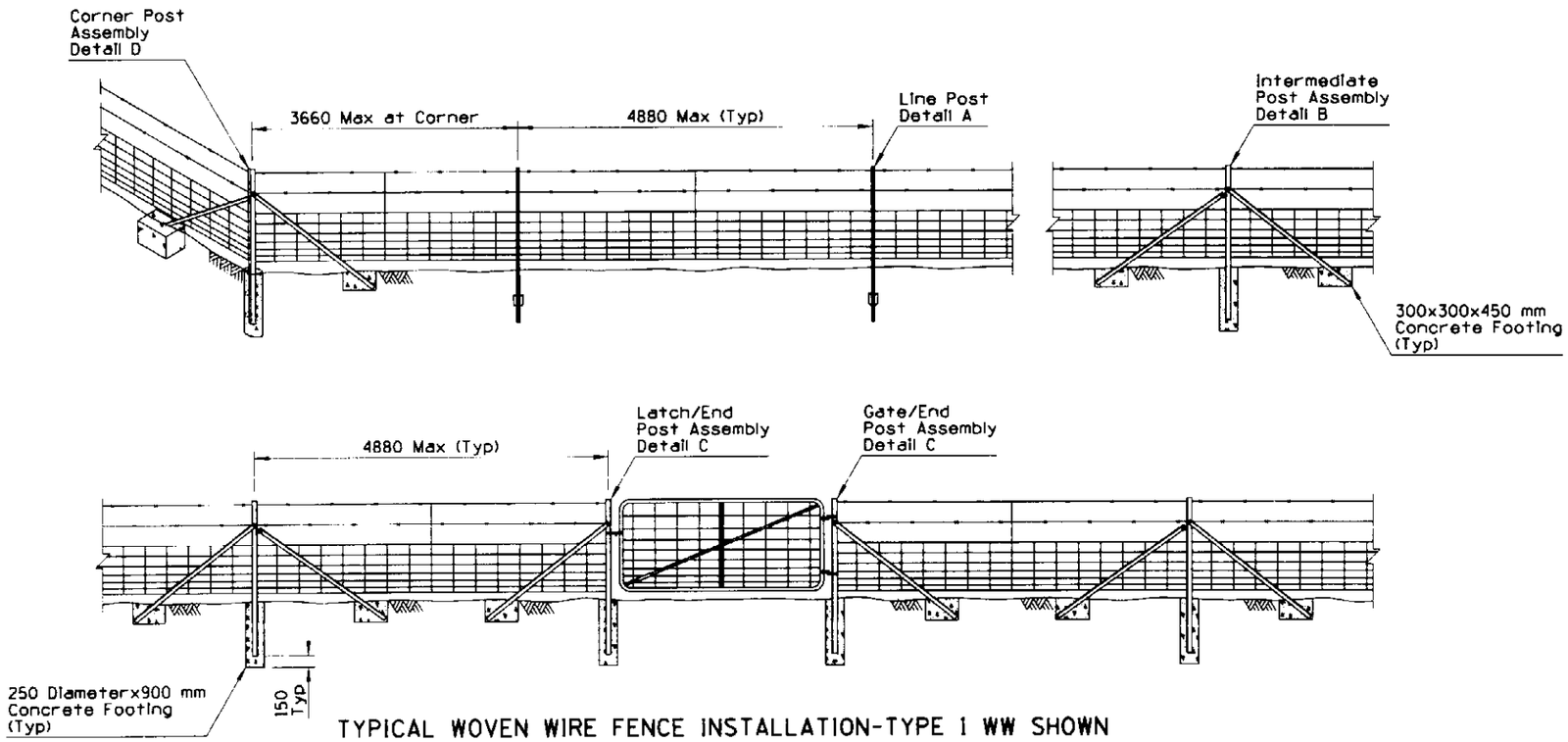

TYPICAL WOVEN WIRE FENCE INSTALLATION-TYPE 1 WW SHOWN

GENERAL NOTES

1. Length of post and braces shall not be less than 2134 mm.
2. Woven wire fence fabric shall be attached to the post at the top, bottom, and intermediate wires.
3. Intermediate Post Assemblies shall be located as shown and at intervals to utilize standard rolls to minimize cutting and waste.
4. A twisted wire stay shall be centered between posts.

◑ ASTM design number

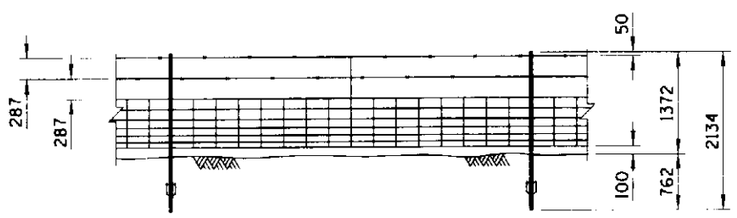

TYPE 1 WOVEN WIRE (WW)

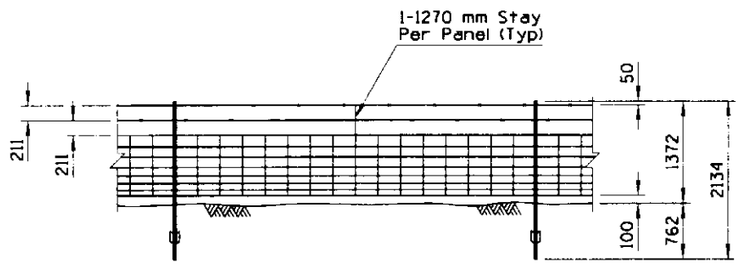

TYPE 2 WOVEN WIRE (WW)

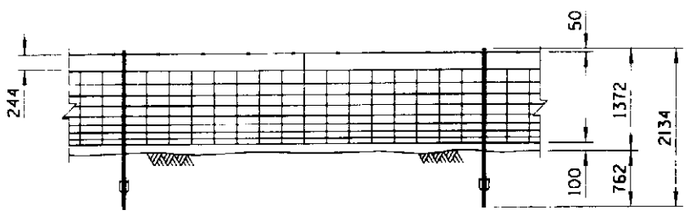

TYPE 3 WOVEN WIRE (WW)

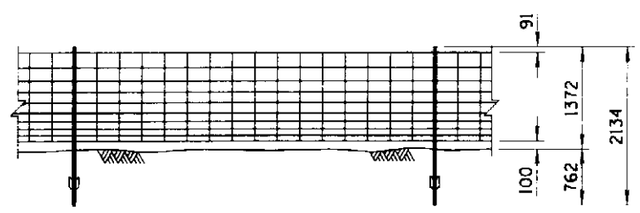

TYPE 4 WOVEN WIRE (WW)

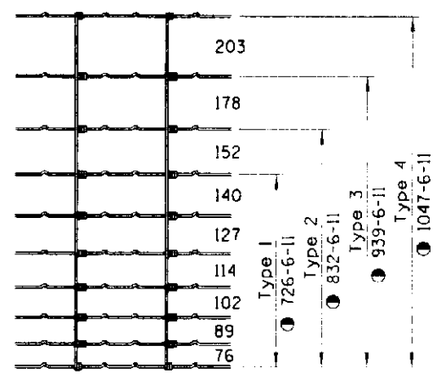

FENCE FABRIC DIMENSIONS AND DESIGN NUMBERS

DESIGN APPROVED	STATE OF ARIZONA DEPARTMENT OF TRANSPORTATION DIVISION OF HIGHWAYS STANDARD DRAWINGS	ISSUE 6/95
APPROVED FOR DISTRIBUTION	FENCE, WOVEN WIRE	DRAWING NO. C-12.10 Sheet 1 of 5

Metric

NO.	DESCRIPTION OF REVISIONS	MADE BY	DATE

Metric

GENERAL NOTES

1. Intermediate Post Assemblies shall be located as shown and at intervals not to exceed 200 m, or midway between all braced posts.
2. For game fence the bottom wire shall be barbless.
3. The stays on game fence shall have their ends turned up, to prevent injuries to game.

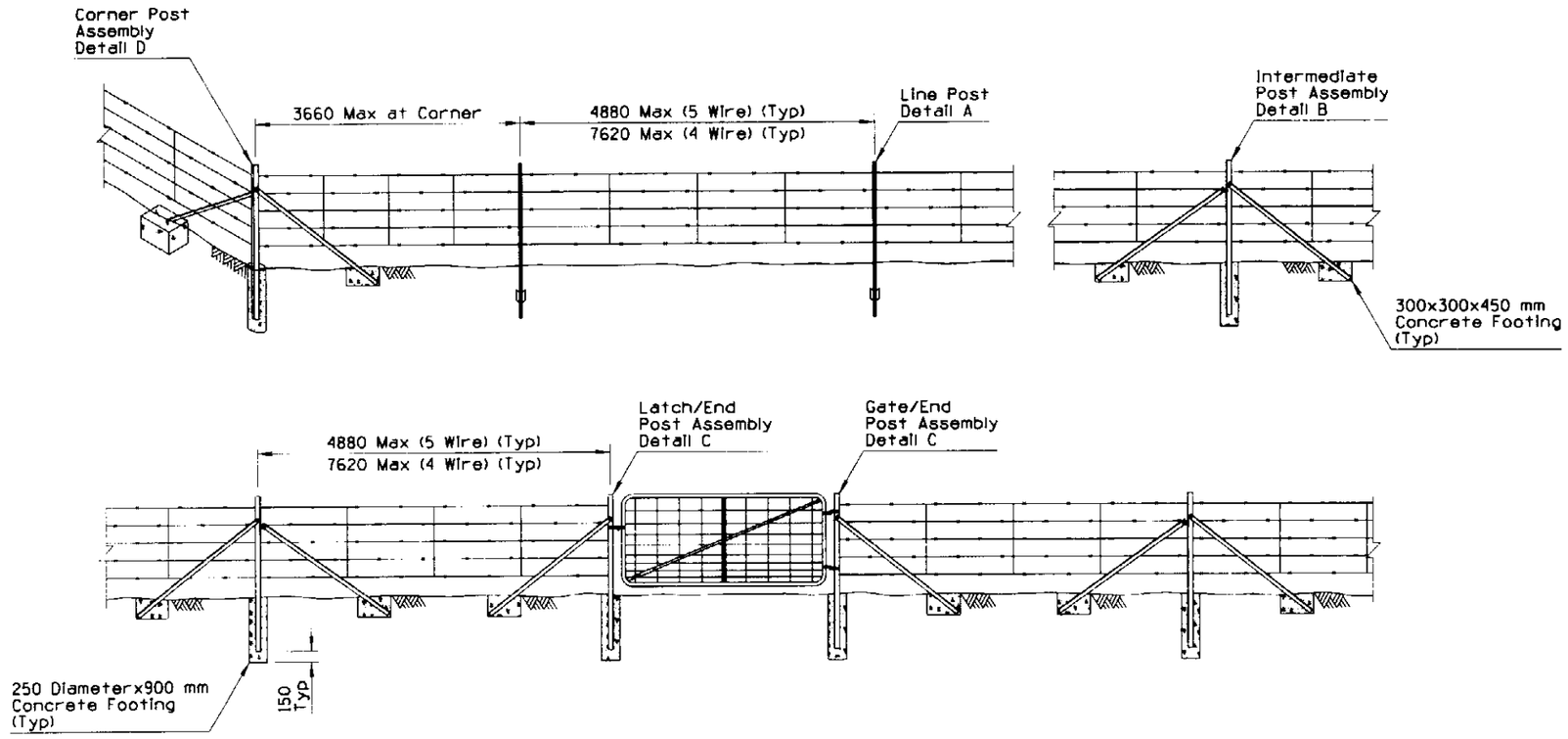

TYPICAL BARBED WIRE FENCE INSTALLATION-TYPE 2 BW SHOWN

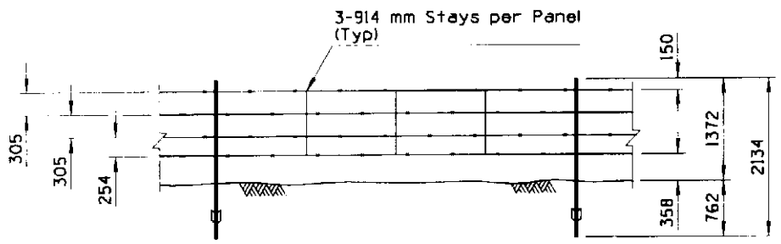

TYPE 1 BARBED WIRE (BW) (4 WIRE)

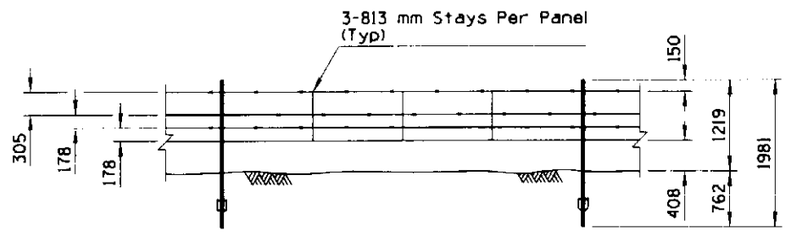

BARBED WIRE GAME FENCE (GF)

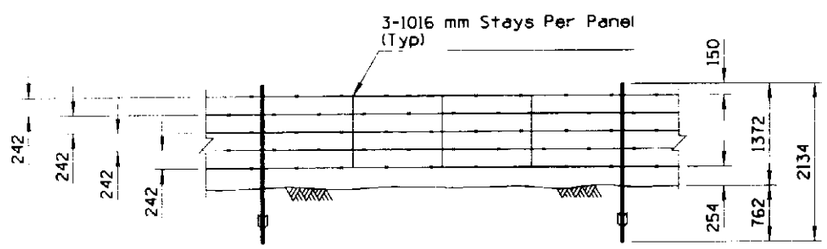

TYPE 2 BARBED WIRE (BW) (5 WIRE)

DESIGN APPROVED	STATE OF ARIZONA DEPARTMENT OF TRANSPORTATION DIVISION OF HIGHWAYS STANDARD DRAWINGS	ISSUE 6/95
APPROVED FOR DISTRIBUTION	FENCE, BARBED WIRE	DRAWING NO. C-12.10 Sheet 2 of 5

Metric

NO	DESCRIPTION OF REVISIONS	MADE BY	DATE
1			
2			
3			
4			

Metric

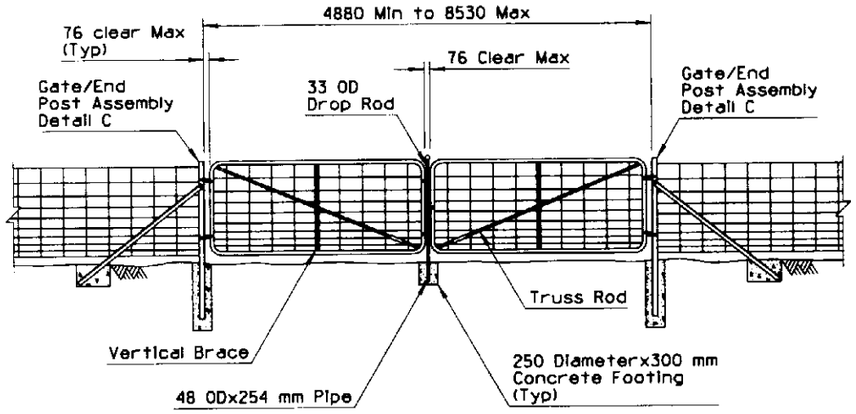

TYPE 1 DOUBLE GATE

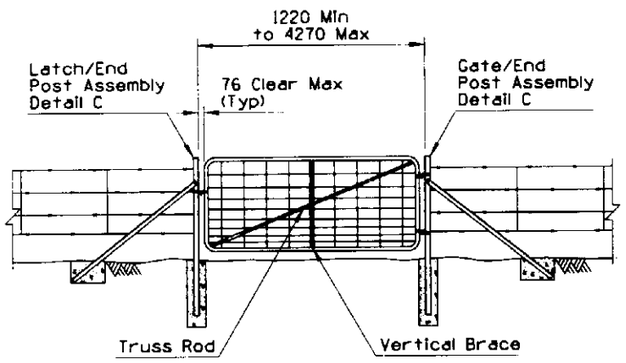

TYPE 1 SINGLE GATE

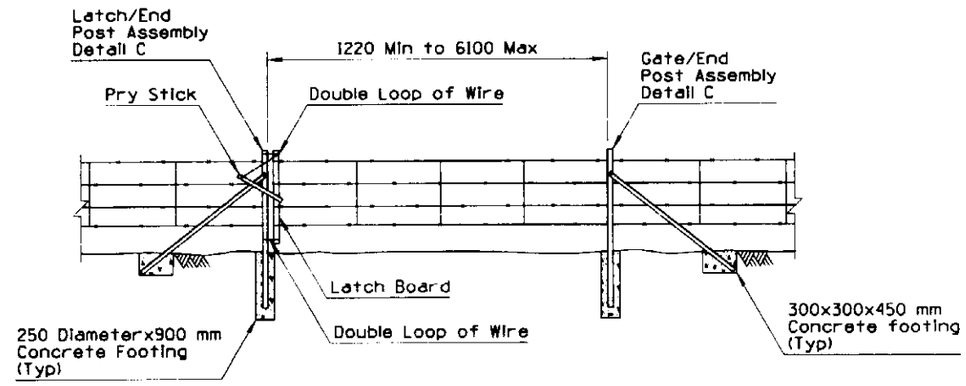

TYPE 2 GATE

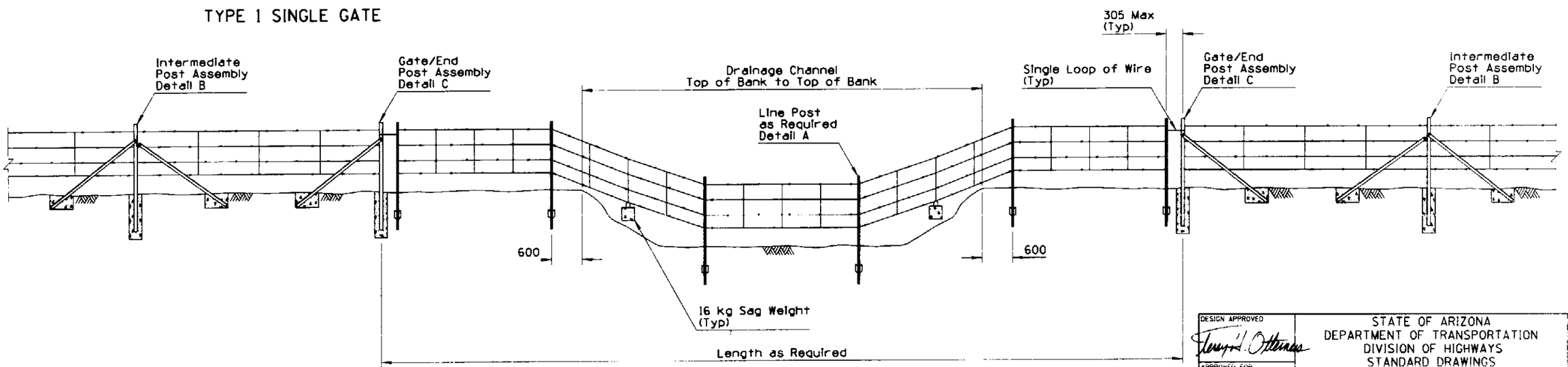

FLOOD GATE

DESIGN APPROVED	STATE OF ARIZONA DEPARTMENT OF TRANSPORTATION DIVISION OF HIGHWAYS STANDARD DRAWINGS	ISSUE 6/95
APPROVED FOR DISTRIBUTION	FENCE, GATE, TYPE 1 AND 2 FLOOD GATE	DRAWING NO. C-12.10 Sheet 3 of 5

Metric

NO	DESCRIPTION OF REVISIONS	MADE BY	DATE
1			
2			
3			
4			

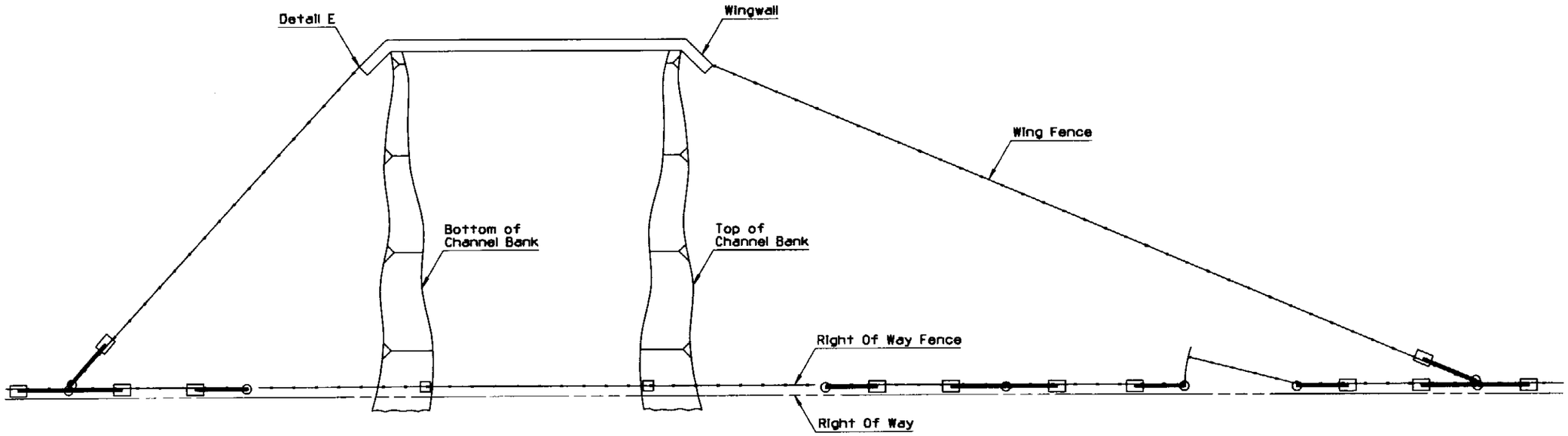

PLAN

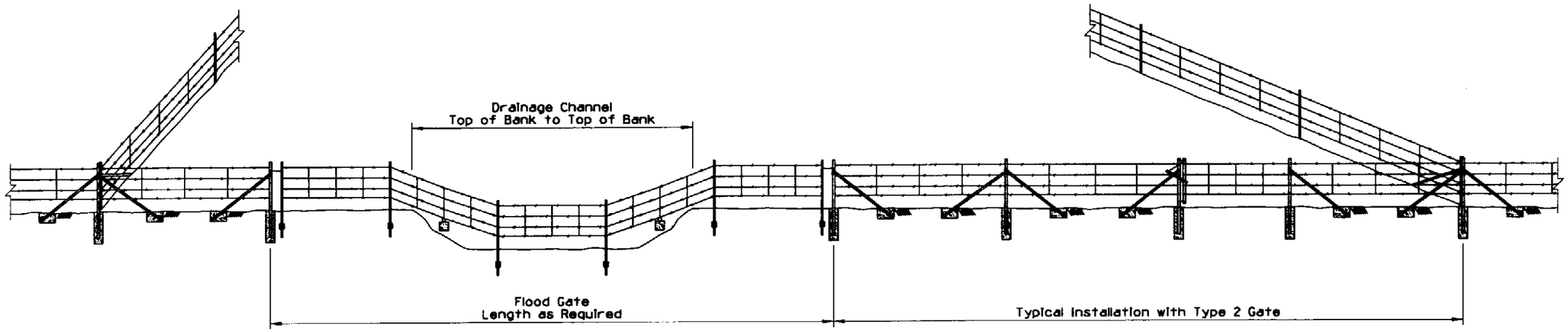

ELEVATION
TYPICAL FLOOD GATE INSTALLATION

DESIGN APPROVED Larry H. Ottmann	STATE OF ARIZONA DEPARTMENT OF TRANSPORTATION DIVISION OF HIGHWAYS STANDARD DRAWINGS	ISSUE 6/95
APPROVED FOR DISTRIBUTION Ronald Williams	FENCE, FLOOD GATE INSTALLATION	DRAWING NO. C-12.10 Sheet 4 of 5

NO	DESCRIPTION OF REVISIONS	MADE BY	DATE
1			
2			
3			
4			

Metric

GENERAL NOTES

1. Post assemblies shall consist of an upright angle 64x64x6.4 mm at 6.10 kg/m, and brace angles 51x51x6.4 mm at 4.75 kg/m.

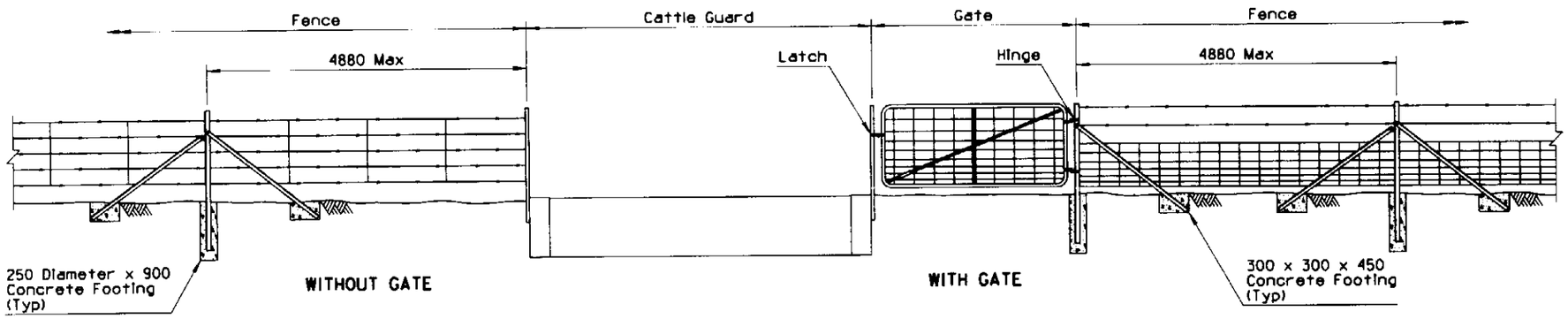

TYPICAL FENCE LOCATION AT CATTLE GUARD

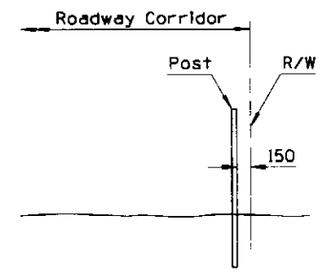

TYPICAL FENCE LOCATION

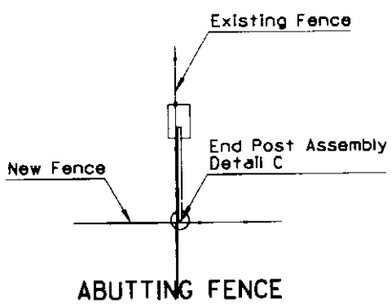

ABUTTING FENCE

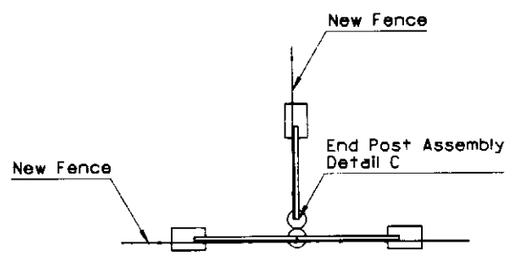

ABUTTING FENCE AT POST

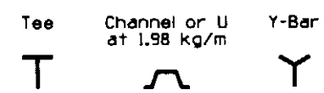

DETAIL A

TYPICAL CROSS SECTIONS OF LINE POST SHAPES

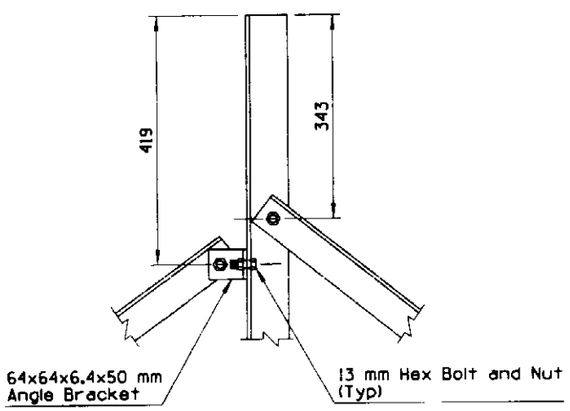

DETAIL B

INTERMEDIATE POST ASSEMBLY

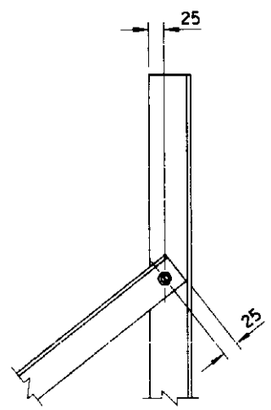

DETAIL C

END POST ASSEMBLY

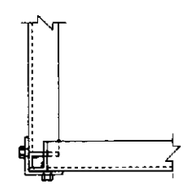

DETAIL D

CORNER POST ASSEMBLY

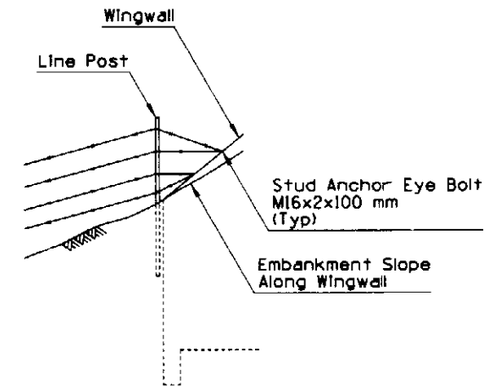

DETAIL E

FENCE CONNECTION TO WINGWALL

DESIGN APPROVED	STATE OF ARIZONA DEPARTMENT OF TRANSPORTATION DIVISION OF HIGHWAYS STANDARD DRAWINGS	ISSUE 6/95
APPROVED FOR DISTRIBUTION	FENCE, MISCELLANEOUS DETAILS	DRAWING NO. C-12.10 Sheet 5 of 5

Metric

NO	DESCRIPTION OF REVISIONS	MADE BY	DATE
1			
2			
3			
4			

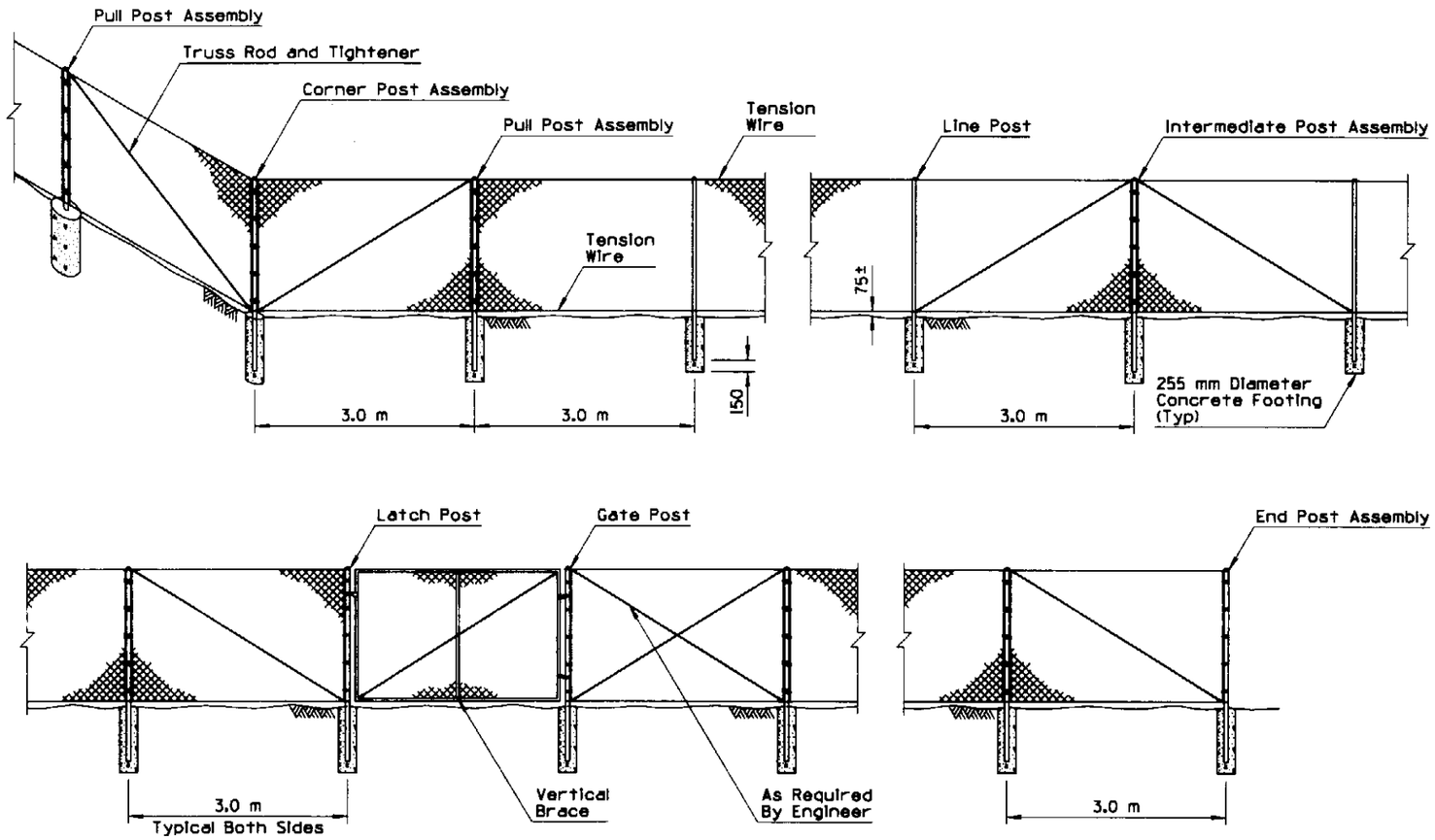

TYPICAL CHAIN LINK FENCE INSTALLATION - TYPE 1 SHOWN

GENERAL NOTES

1. Posts shall be round, H-section, or roll-formed and shall conform to the nominal dimensional requirements shown on the plans. Dimensional tolerances for all shapes shall be according to ASTM A500. In addition, the material of which posts are fabricated shall have a nominal thickness, before galvanizing, of not less than 2.8 mm for line posts and 3.3 mm for terminal posts.
2. Chain link fabric shall be either zinc-coated or aluminum-coated steel wire fence fabric. Zinc-coated steel fabric shall conform to the requirements of ASTM A392, Class 1 coating. Aluminum-coated steel fabric shall conform to the requirements of ASTM A491, with a minimum weight of coating of 122 g per square meter of wire surface area. Fabric shall be 3.05 mm thick for all fence fabric 1520 mm or less in height and shall be 3.76 mm thick for fabrics greater than 1520 mm in height.
3. Tension wires shall be 4.50 mm diameter coil spring steel wire with a minimum tensile strength of 520 MPa and shall be zinc-coated or aluminum-coated.
4. Truss rods shall be 9.5 mm diameter adjustable rods. Truss tighteners shall have a strap thickness of not less than 6.3 mm.
5. Stretcher bars shall be 4.76 mm by 19 mm steel flat bars. Stretcher bar bands shall be 3 mm by 25 mm preformed steel bands.
6. Bottom tension wire shall be 75 mm from top of crown on concrete footings.
7. Intermediate post assemblies shall be spaced at 150 meter intervals or midway between pull posts when the distance between such posts is less than 300 meters and more than 150 meters.
8. See sheet 3 of 3 for typical fence location.

TYPICAL POST DIMENSIONS

Fabric Height	Corner, End, Intermediate, Gate, Latch and Pull Posts				Line Posts			
		Round	Roll Formed			Round		Roll Formed
	Length	(OD)	⌞	□	Length	(OD)	H-Section	□
915	1830	60	89x89	57x43	1675	48	48x41	48x41
1220	2130	60	89x89	57x43	1980	48	48x41	48x41
1520	2440	60	89x89	57x43	2285	48	48x41	48x41
1830	2740	60	89x89	57x43	2590	48	48x41	48x41
Over 1830	Height +915	73	89x89	63.5x63.5	Height 760	60	57x51	48x41

DESIGN APPROVED	STATE OF ARIZONA DEPARTMENT OF TRANSPORTATION DIVISION OF HIGHWAYS STANDARD DRAWINGS	ISSUE 6/95
APPROVED FOR DISTRIBUTION	FENCE, CHAIN LINK TYPE 1	DRAWING NO. C-12.20 Sheet 1 of 3

NO.	DESCRIPTION OF REVISIONS	MADE BY	DATE
1			
2			
3			
4			

Metric

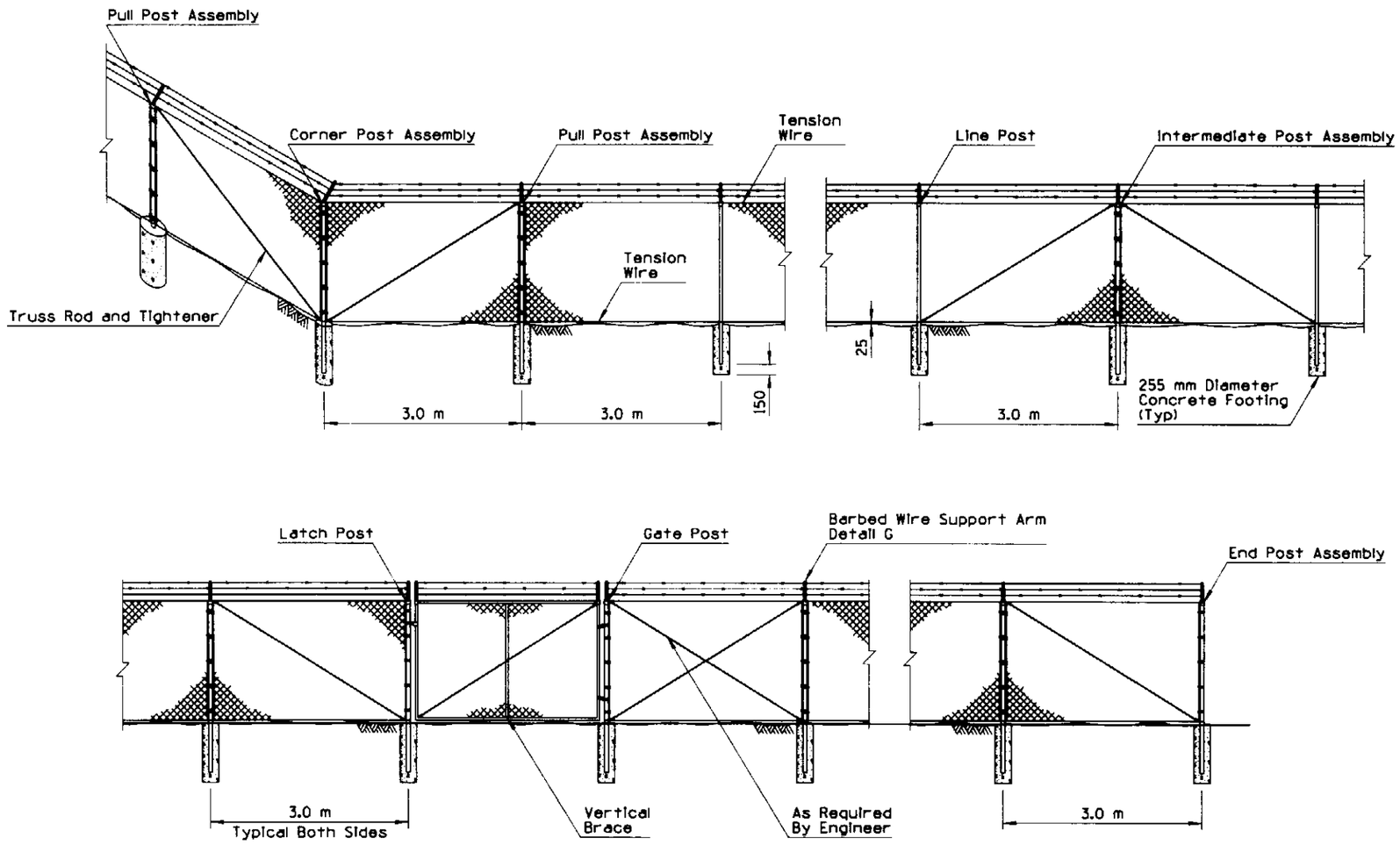

TYPICAL CHAIN LINK FENCE INSTALLATION - TYPE 2 SHOWN

GENERAL NOTES

1. Barbed wire for use with Type 2 chain link fence shall be 2.51 mm thick steel wire with 4 point 2.03 mm thick barbs spaced 127 mm apart and shall be either zinc-coated or aluminum-coated. Zinc-coated steel wire shall conform to the requirements of ASTM A121, Class 1 coating. Aluminum-coated steel wire shall conform to the requirements of ASTM A585, Type I, Class 1 coating.
2. Barbed wire support arm shall be of the type shown on the plans, shall be fabricated from commercial quality steel, and shall be zinc-coated in accordance with the requirements of AASHTO M111.
3. Bottom tension wire shall just clear top of crown on concrete footings.
4. For details and notes not shown - see chain link fence Type 1, sheet 1 of 3.
5. See sheet 3 of 3 for typical fence location.

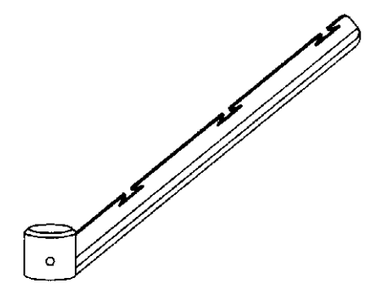

DETAIL G
BARBED WIRE SUPPORT ARM

TYPICAL POST DIMENSIONS								
Fabric Height	Corner, End, Intermediate, Gate, Latch and Pull Posts				Line Posts			
		Round	Roll Formed			Round		Roll Formed
	Length	(OD)	∟	□	Length	(OD)	H-Section	□
1830	2590	60	89x89	63.5x63.5	2440	48	48x41	48x41

DESIGN APPROVED Terry H. Otterman	STATE OF ARIZONA DEPARTMENT OF TRANSPORTATION DIVISION OF HIGHWAYS STANDARD DRAWINGS	ISSUE 6/95
APPROVED FOR DISTRIBUTION Ronald W. Williams	FENCE, CHAIN LINK TYPE 2	DRAWING NO. C-12.20 Sheet 2 of 3

Metric

NO	DESCRIPTION OF REVISIONS	MADE BY	DATE
1			
2			
3			
4			

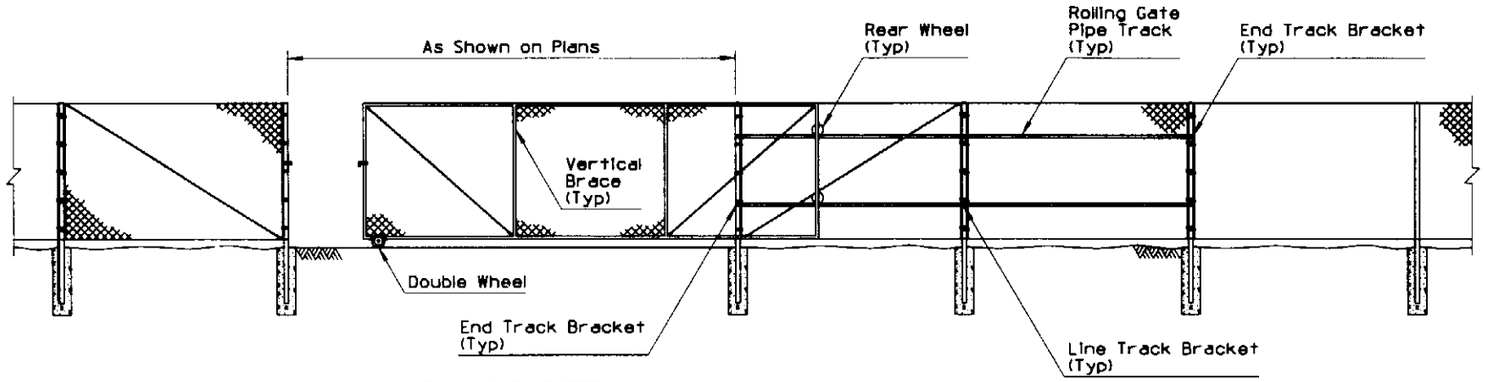

ROLLING GATE

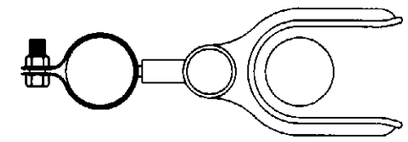

SECTION A-A
DOUBLE GATE LATCH ASSEMBLY

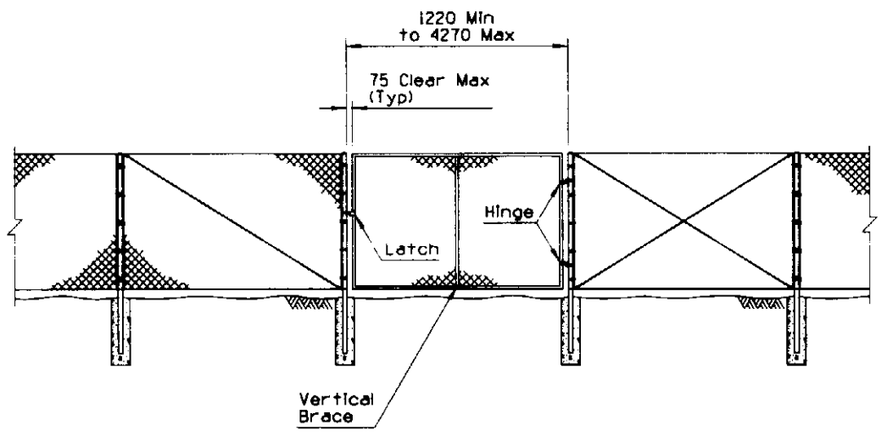

SINGLE GATE

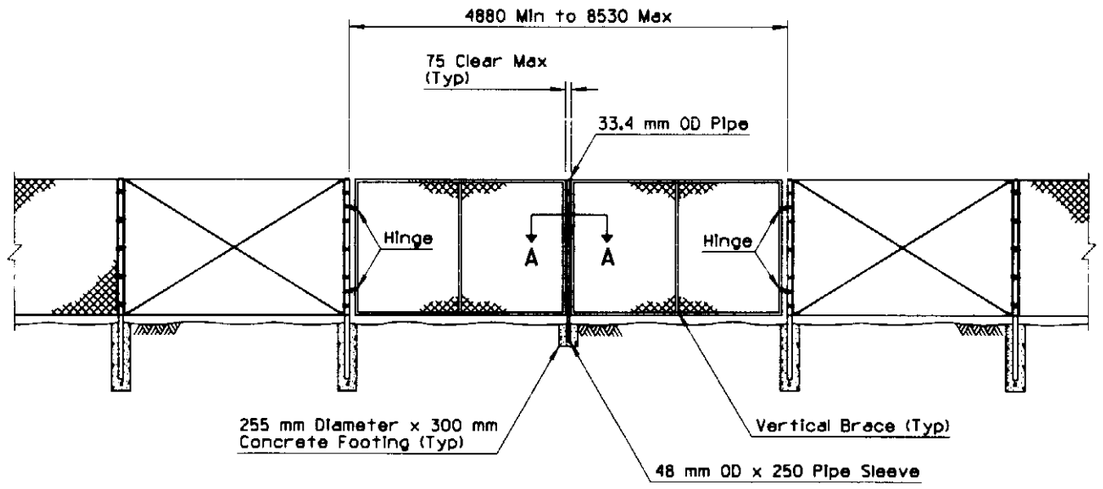

DOUBLE GATE

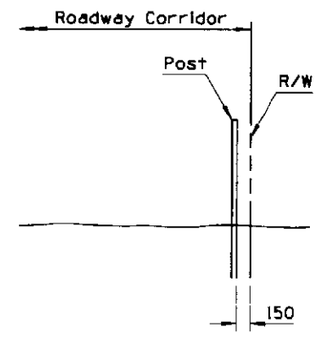

TYPICAL FENCE LOCATION

TYPICAL GATE DIMENSIONS									
SINGLE AND DOUBLE SWING GATES						ROLLING GATES			
Gate Leaf Width	Vertical Braces	Gate Post Size	Gate Leaf Width	Vertical Braces	Gate Post Size	Gate Leaf Width	No of Equally Spaced Vertical Braces	Tension Rods Per Braced Panel	Gate Post Size
1830 H or Less		OD	Over 1830 H		OD				OD
915 to 2440	0	73	915 to 2440	0	73	1830 to 3960	1	0	73
2440 to 4880	1	102	2440 to 4880	1	102	3960 to 4880	1	1	73
4880 to 5490	2	102	'			4880 to 6400	2	1	73
						6400 to 8230	2	1	73
						8530 and Larger	3	1	73

GATES FOR CHAIN LINK FENCE - TYPE 1 SHOWN
(Type 2, With Barbed Wire Typical)

DESIGN APPROVED	STATE OF ARIZONA DEPARTMENT OF TRANSPORTATION DIVISION OF HIGHWAYS STANDARD DRAWINGS	ISSUE 6/95
APPROVED FOR DISTRIBUTION	FENCE, CHAIN LINK GATES	DRAWING NO. C-12.20 Sheet 3 of 3

NO	DESCRIPTION OF REVISIONS	MADE BY	DATE
1			
2			
3			
4			

Metric

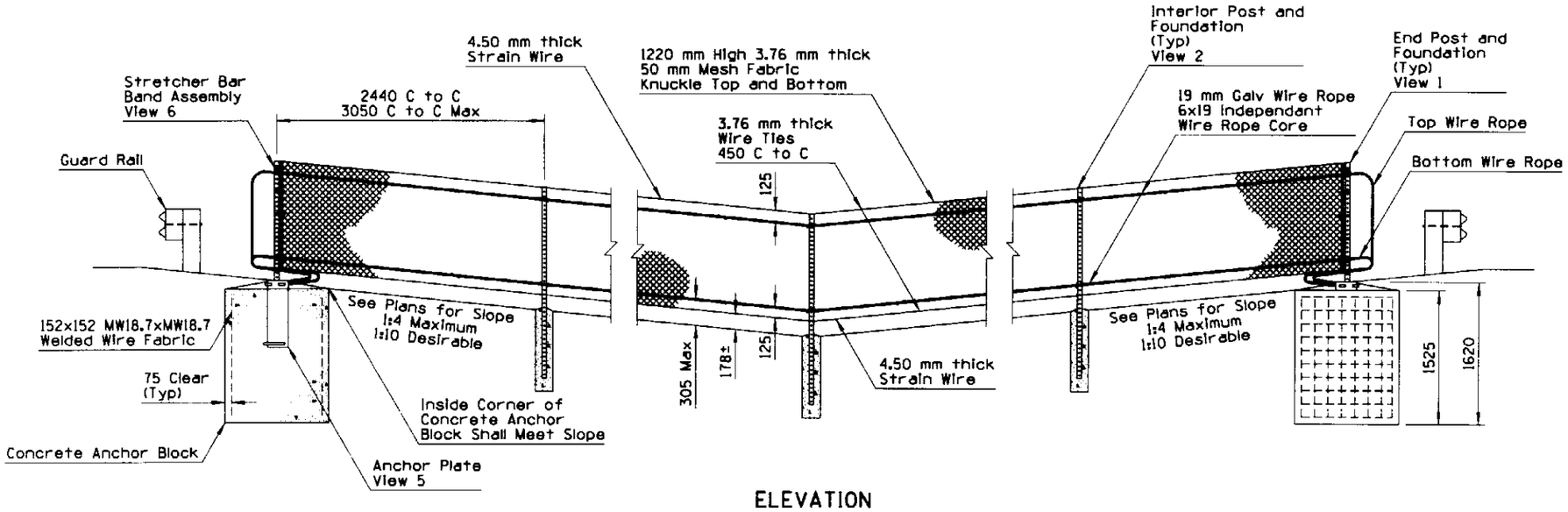

ELEVATION

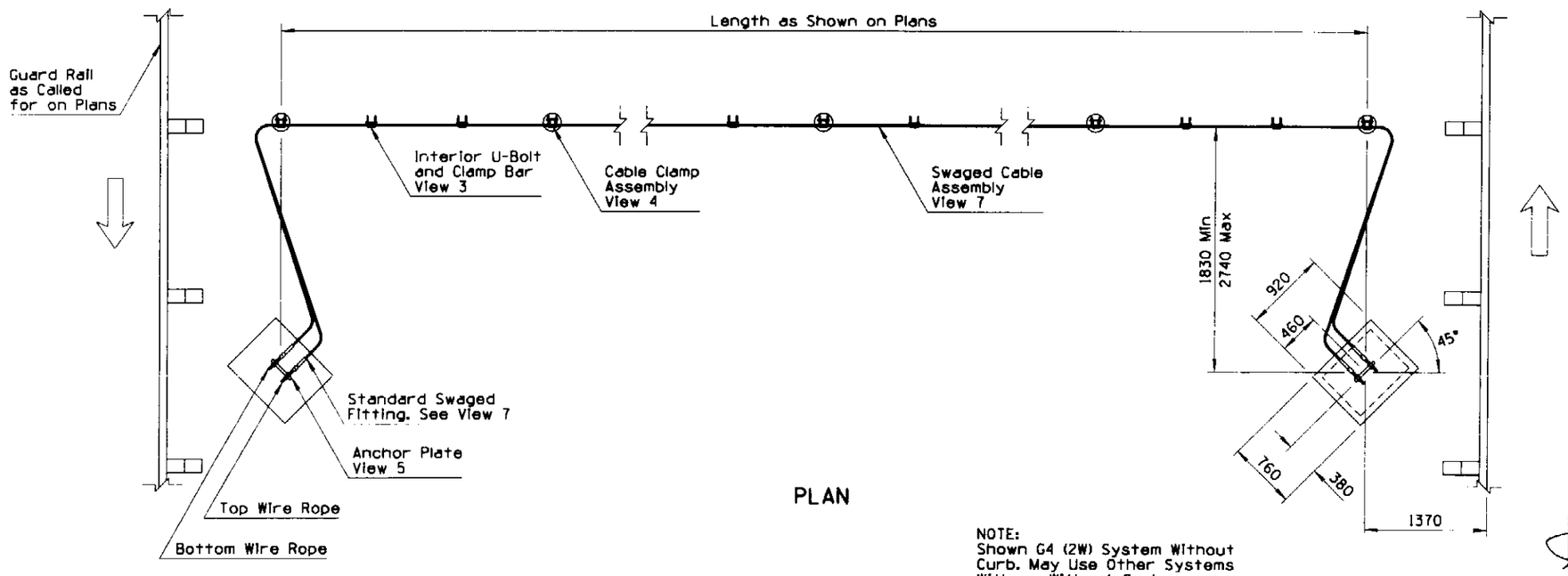

PLAN

NOTE:
Shown G4 (2W) System Without Curb. May Use Other Systems With or Without Curb.

GENERAL NOTES

1. All concrete shall be Class S, 30 Mpa.
2. All bolts, nuts, washers and fittings shall meet the dimensional requirements of the American National Standards Insittute, unless otherwise designated and shall be galvanized in accordance with ASTM A153.
3. Galvanized swaged fitting and U-Bolt shall conform to ASTM A449.
4. The 19 mm galvanized wire rope shall conform to AASHTO M30 Class B, Type 2.
5. The wire fabric, ties, bands, stretcher bars, and other fittings and hardware shall conform to AASHTO M181.
6. The wire fabric fence shall follow contour of the graded median.
7. The excavation for the concrete anchor blocks shall be to neat lines. Maximum excess shall be 75 mm.
8. Perforated posts shall be square tube formed from 2.67 mm thick ASTM A 366/A 366M cold rolled carbon steel. The square tubes shall be welded directly in the corner by high frequency resistance welding or equal. The posts to be externally scarfed to agree with standard corner radii of 4 mm ± 1.6 mm.
9. Perforated posts shall be galvanized to the requirements of ASTM A 653/A 653M. Coating Designator shall be Z275.
10. The cables shall have enough tension to prevent sagging. The location of the concrete anchor blocks may also be varied to provide enough tension to help prevent sagging.
11. Two interior U-bolt and clamp bars shall be spaced at 1/3 of the distance between posts.
12. See Standard C-12.20 for 1220 mm fabric details.
13. An alternate to rectangular concrete anchor block shall be a 915 mm diameter round footing with an additional depth of 100 mm.
14. The median approach grade within 30 m ± of the Chain Link Cable Barrier should not exceed a grade break of 10 percent.

DESIGN APPROVED APPROVED FOR DISTRIBUTION	STATE OF ARIZONA DEPARTMENT OF TRANSPORTATION DIVISION OF HIGHWAYS STANDARD DRAWINGS	ISSUE 6/95
	CHAIN LINK CABLE BARRIER	DRAWING NO. C-12.30 Sheet 1 of 3

Metric

NO	DESCRIPTION OF REVISIONS	MADE BY	DATE
1			
2			
3			
4			

Metric

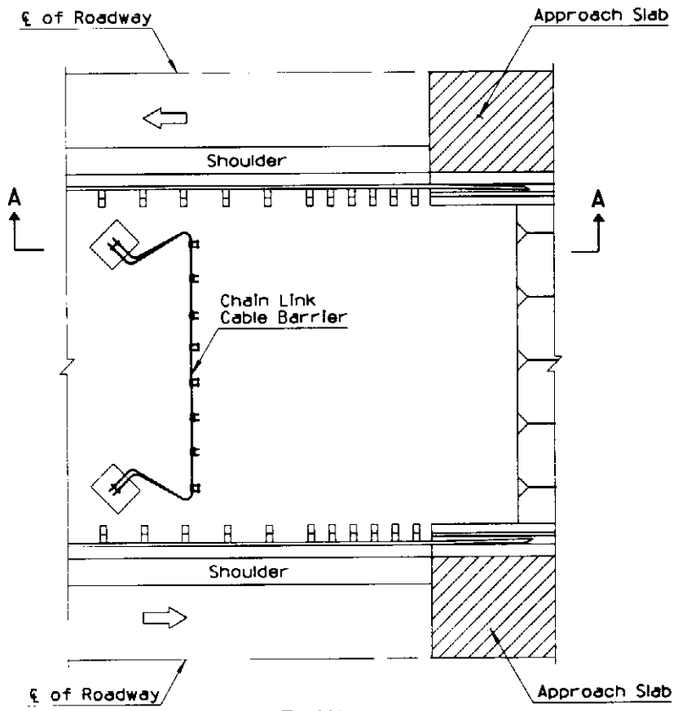

PLAN

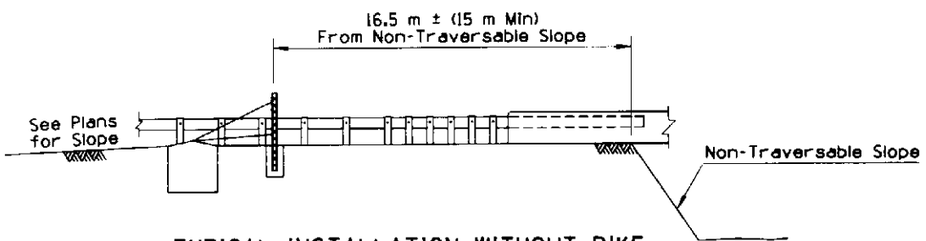

TYPICAL INSTALLATION WITHOUT DIKE

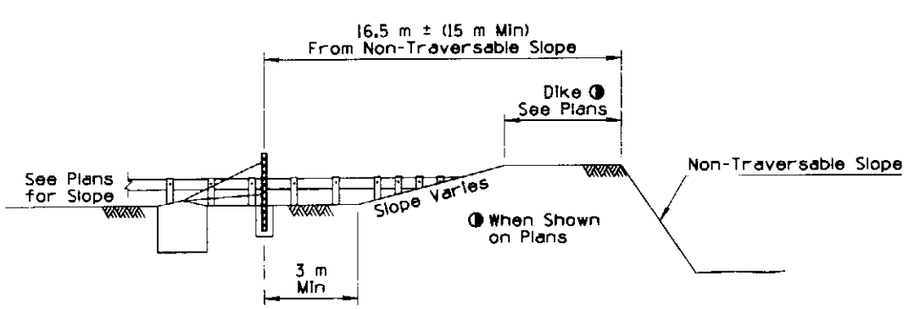

SECTION A-A
TYPICAL INSTALLATION WITH DIKE

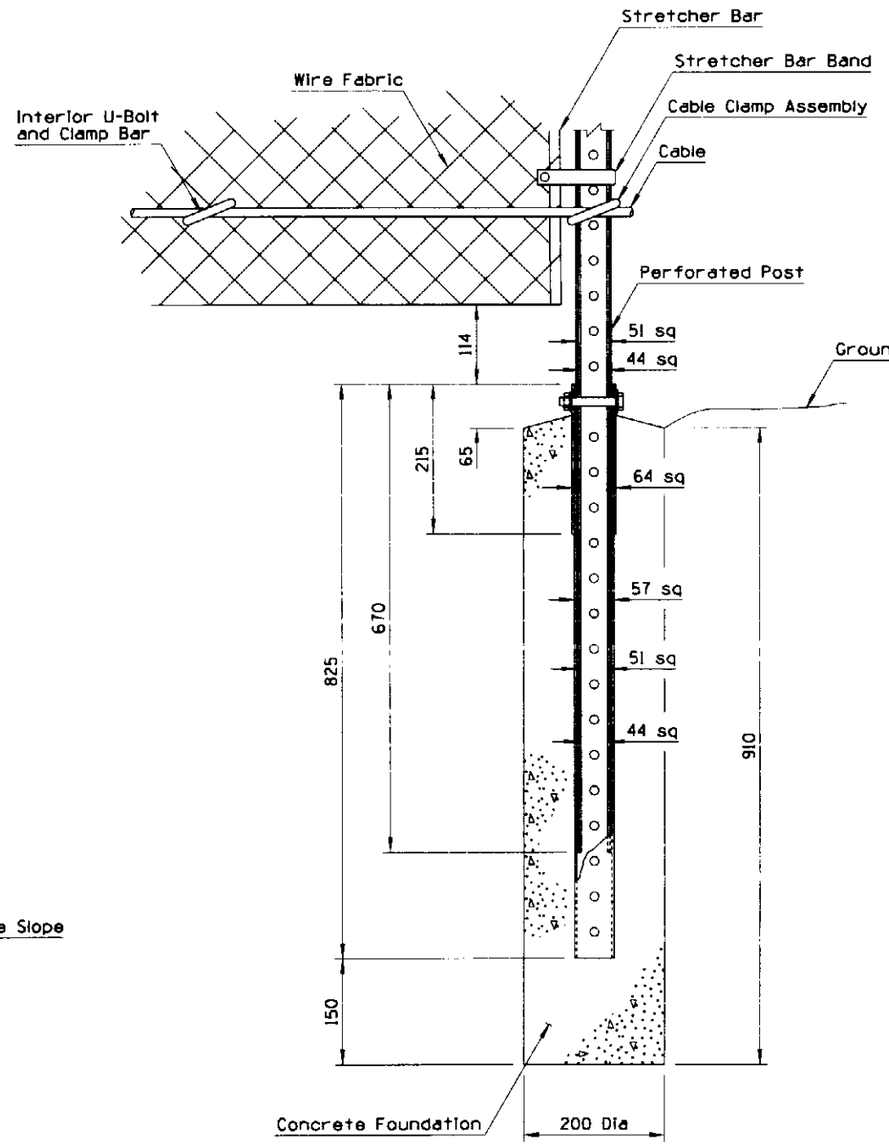

VIEW 1
END POST AND FOUNDATION

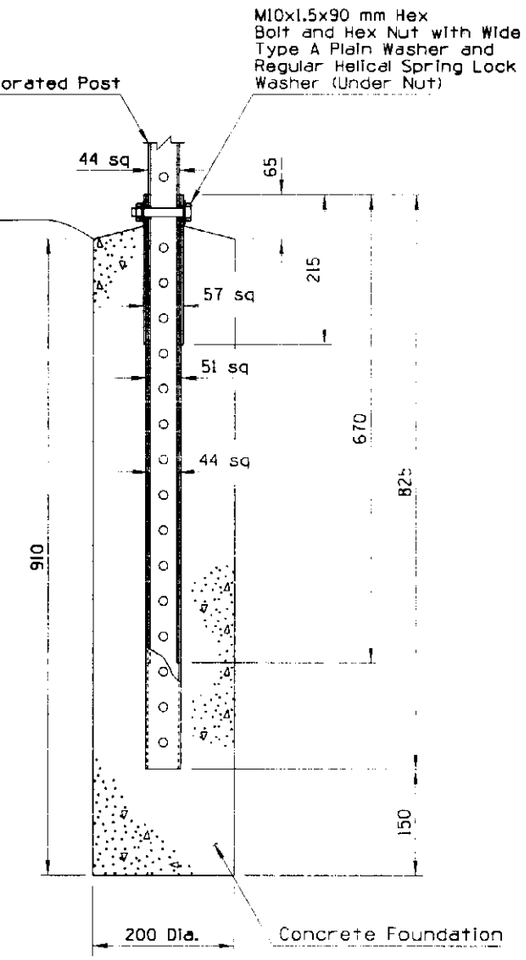

VIEW 2
INTERIOR POST AND FOUNDATION

DESIGN APPROVED	STATE OF ARIZONA DEPARTMENT OF TRANSPORTATION DIVISION OF HIGHWAYS STANDARD DRAWINGS	ISSUE 6/95
APPROVED FOR DISTRIBUTION	CHAIN LINK CABLE BARRIER	DRAWING NO. C-12.30 Sheet 2 of 3

Metric

NO	DESCRIPTION OF REVISIONS	MADE BY	DATE
1			
2			
3			
4			

Metric

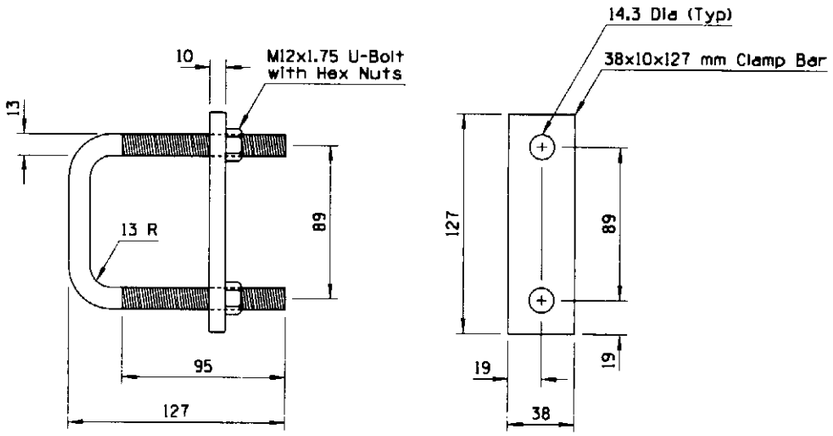

VIEW 3
U-BOLT AND CLAMP BAR

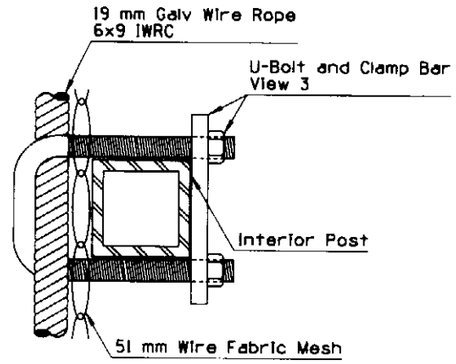

VIEW 4
CABLE CLAMP ASSEMBLY

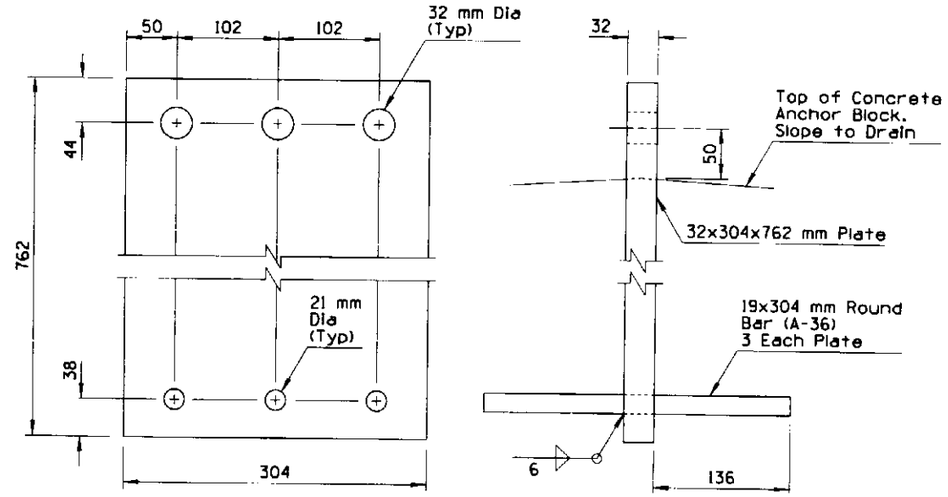

VIEW 5
ANCHOR PLATE

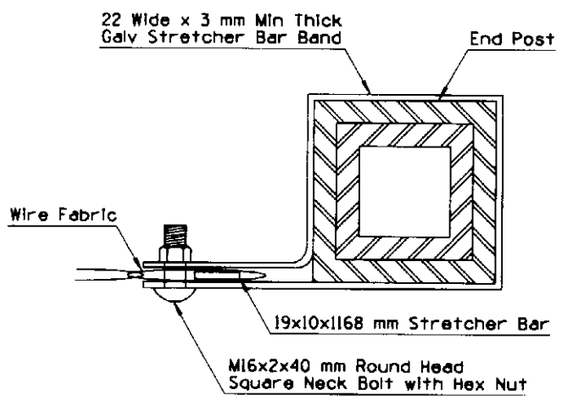

VIEW 6
STRETCHER BAR BAND ASSEMBLY

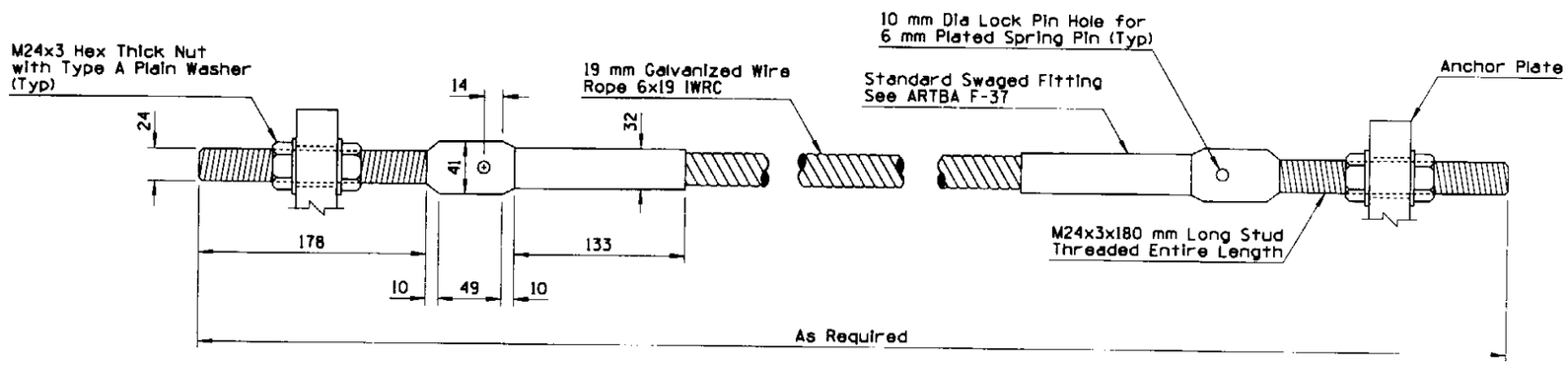

VIEW 7
SWAGED CABLE ASSEMBLY

DESIGN APPROVED	STATE OF ARIZONA DEPARTMENT OF TRANSPORTATION DIVISION OF HIGHWAYS STANDARD DRAWINGS	ISSUE 6/95
APPROVED FOR DISTRIBUTION	CHAIN LINK CABLE BARRIER	DRAWING NO. C-12.30 Sheet 3 of 3

Metric

NO	DESCRIPTION OF REVISIONS	MADE BY	DATE
1			
2			
3			
4			

Metric

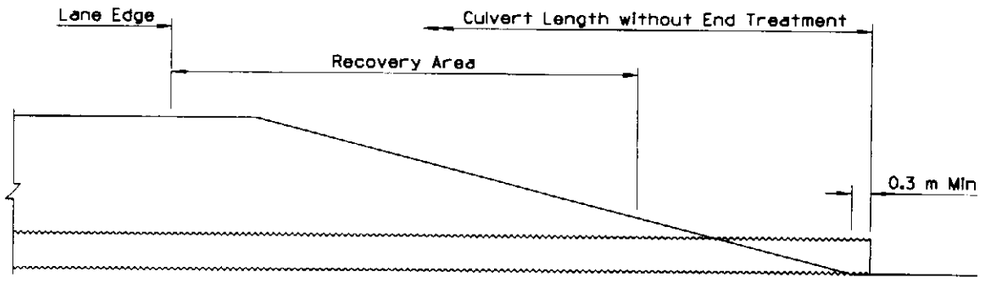

CULVERT INSTALLATION WITHOUT END TREATMENT

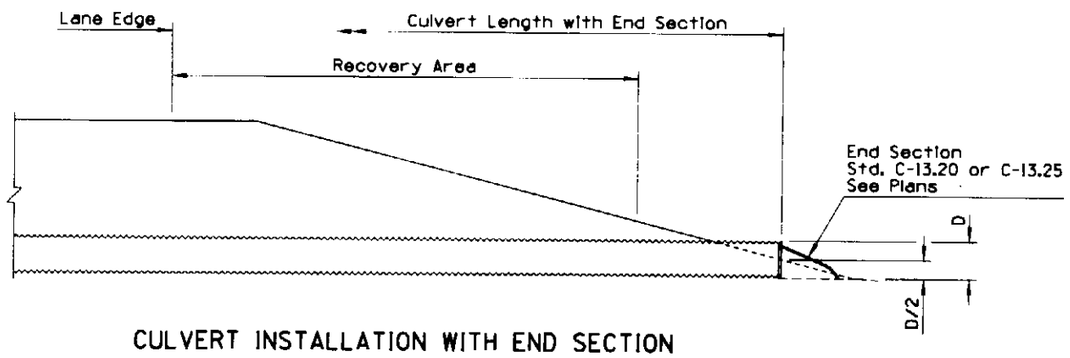

CULVERT INSTALLATION WITH END SECTION

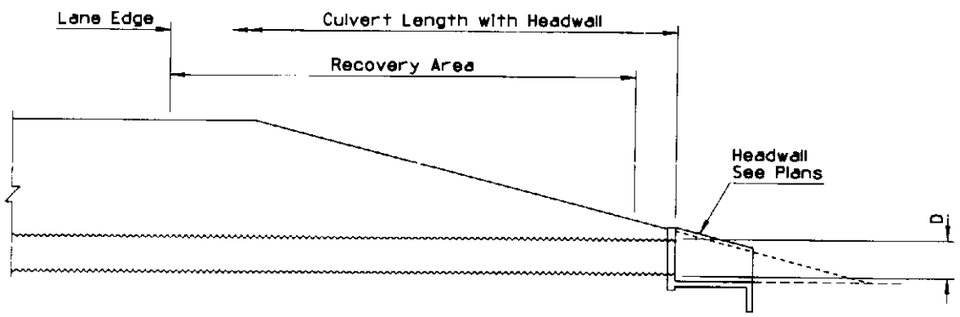

CULVERT INSTALLATION WITH HEADWALL

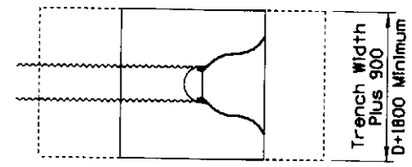

PLAN

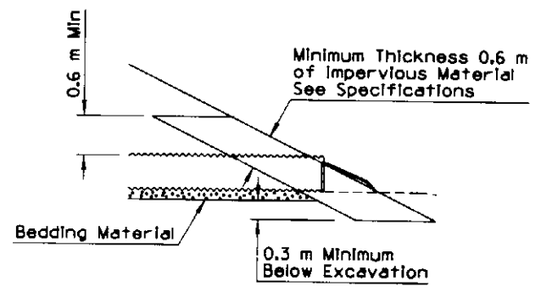

ELEVATION WITH END SECTION

GENERAL NOTES

1. See plans for any required inlet and/or outlet protection.
2. See remaining C-13 Series standards, Std B-11.11 and Std B-11.14.
3. Dimensions W and E apply to both non-trench and trench conditions.
4. Minimum cover over pipe culverts shall be 300 mm, measured from the top of pipe.
5. See Pipe Berm Requirement Detail for pipe berm requirements and Std C-03.10 for installation. If Point A is within the recovery area, then a pipe berm is required and Point B is set at the edge of the recovery area.
6. Plating of slopes at pipe locations similar for pipes without end sections and for multiple pipe installations.

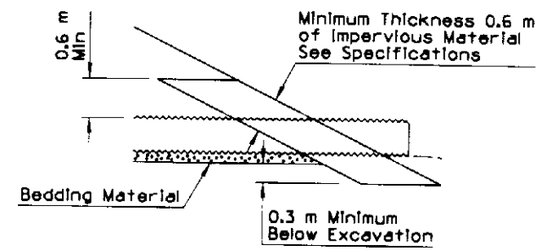

ELEVATION

PLATING SLOPES AT PIPE LOCATIONS

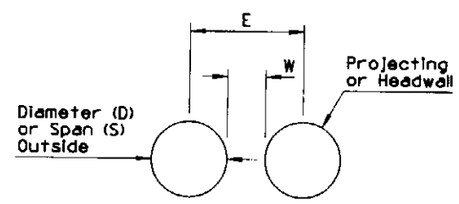

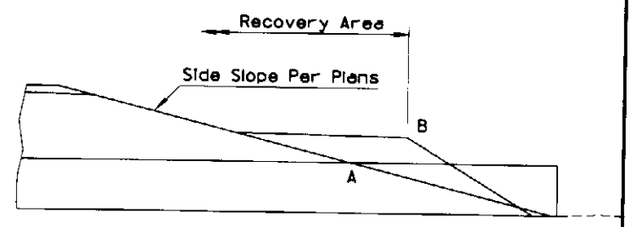

PIPE BERM REQUIREMENT DETAIL

MINIMUM SPACING FOR MULTIPLE INSTALLATIONS		
Diameter or Span	Installation Type	
	Projecting (W)	Headwall (E)
460	300	760
610	300	910
760	370	1130
910	450	1360
1070	530	1600
1220 to 1680	(D or S)/2	D + 900
1830 and Over	900	D + 900

MULTIPLE INSTALLATIONS WITHOUT END SECTIONS

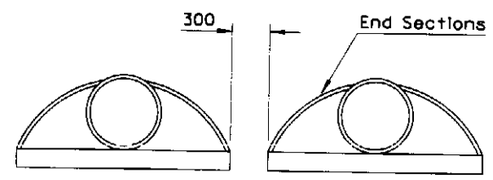

MULTIPLE INSTALLATIONS WITH END SECTIONS

DESIGN APPROVED	STATE OF ARIZONA DEPARTMENT OF TRANSPORTATION DIVISION OF HIGHWAYS STANDARD DRAWINGS	ISSUE 6/95
APPROVED FOR DISTRIBUTION	PIPE CULVERT INSTALLATION	DRAWING NO. C-13.10 Sheet 1 of 2

Metric

NO	DESCRIPTION OF REVISIONS	MADE BY	DATE
1			
2			
3			
4			

Metric

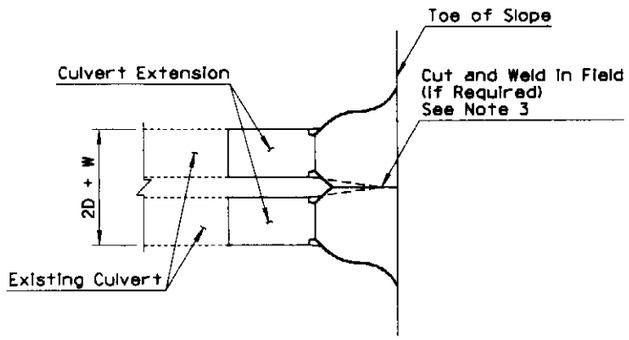

SPECIAL MULTIPLE PIPE END SECTION DETAIL
FOR PIPE CULVERT EXTENSIONS ONLY

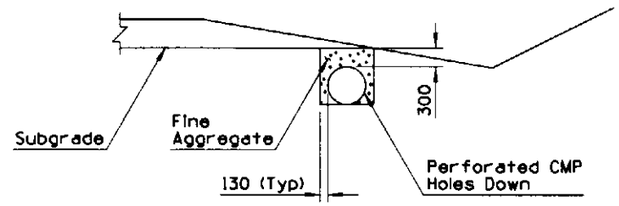

PERFORATED CMP INSTALLATION

GENERAL NOTES

1. Minimum cover on pipe culverts shall be 300 mm, measured from the top of pipe.
2. See remaining C-13 Series standards for other pipe details.
3. After welding, the damaged coating shall be cleaned by a wire brush and painted with at least one full coat of Paint No. 4, or given two coats of an approved hot asphalt paint, as directed by the Engineer.

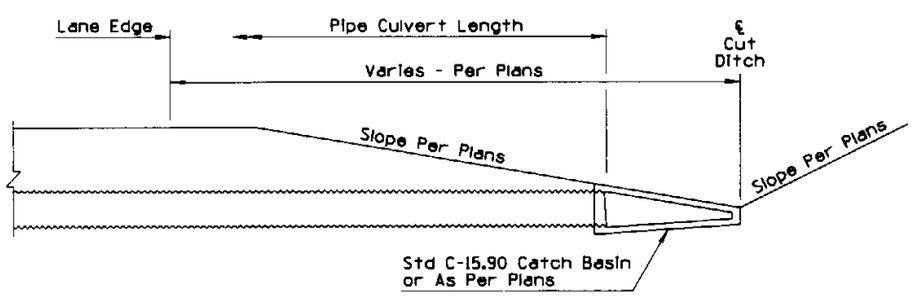

PIPE AND CATCH BASIN INSTALLATION
AT SAG CONDITION OF CUT DITCH

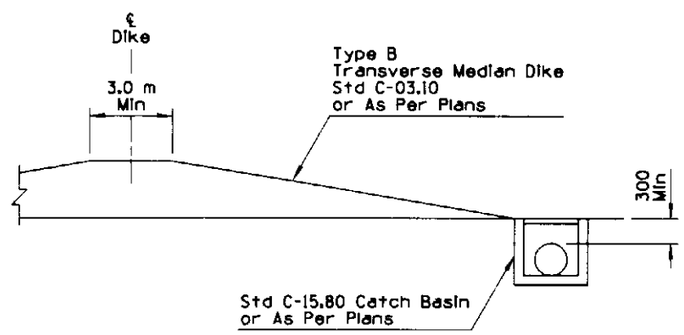

PIPE AND CATCH BASIN INSTALLATION
AT BASE OF TRANSVERSE DIKE

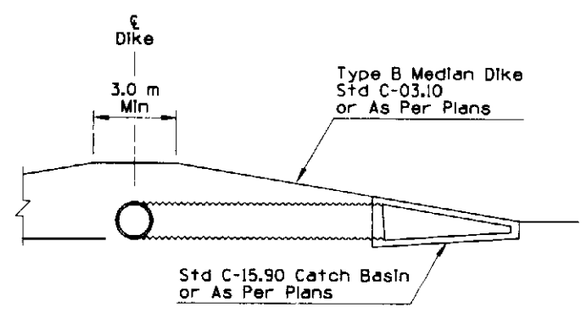

PIPE AND CATCH BASIN INSTALLATION
AT FACE OF TRANSVERSE DIKE

DESIGN APPROVED Terry H. Otterness APPROVED FOR DISTRIBUTION Ronald A. Williams	STATE OF ARIZONA DEPARTMENT OF TRANSPORTATION DIVISION OF HIGHWAYS STANDARD DRAWINGS	ISSUE 6/95
	PIPE CULVERT INSTALLATION	DRAWING NO. C-13.10 Sheet 2 of 2

Metric

NO	DESCRIPTION OF REVISIONS	MADE BY	DATE
1			
2			
3			
4			

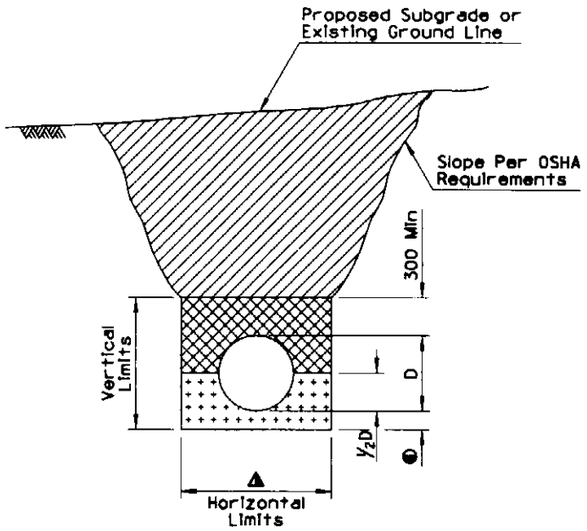

TRENCH CONDITION
IN NATURAL GROUND OR IN EMBANKMENT WITHOUT BRACING

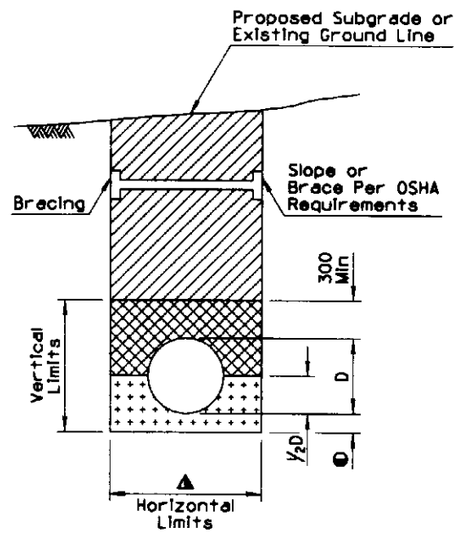

TRENCH CONDITION
IN NATURAL GROUND OR IN EMBANKMENT WITH BRACING SHOWN

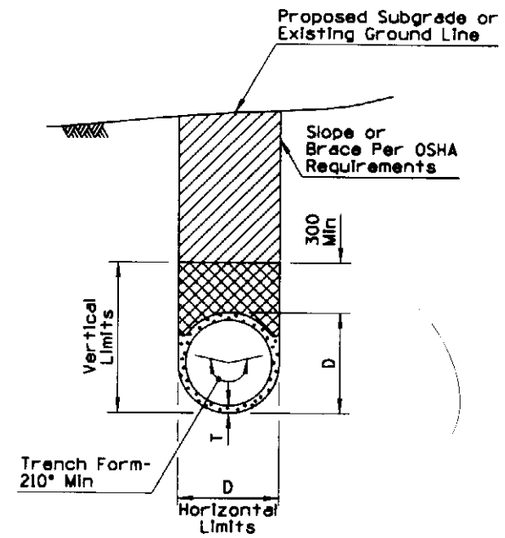

TRENCH CONDITION
NRCIPCP IN NATURAL GROUND OR IN EMBANKMENT

GENERAL NOTES

1. Pipes shall be installed either in a trench condition or in a non-trench condition in natural ground or in embankment.
2. In a trench condition, the vertical and horizontal limits shall be maintained. If horizontal limits are exceeded or the vertical limits are not maintained, a non-trench condition exists.
3. Bracing and sloping shall conform to OSHA requirements.
4. Pipe backfill may be bedding material.
5. In a non-trench condition, the embankment for pipe stability shall be constructed in lifts to the limits shown in the detail simultaneously with the bedding material and pipe backfill. If the contractor chooses to construct it as a trench condition, the embankment shall be constructed before excavating the trench.

D - Outside diameter of full circle pipe or outside dimension (span or rise) of arch, arch pipe, elliptical pipe.

T - Minimum wall thickness for NRCIPCP. See Plans.

▲ - D+600 mm maximum for diameters up to 1220 mm and D+900 mm maximum for diameters 1220 mm and over.

◐ - 150 mm except when on unyielding or unstable material. See standard specifications.

TRENCH BACKFILL

PIPE BACKFILL

BEDDING

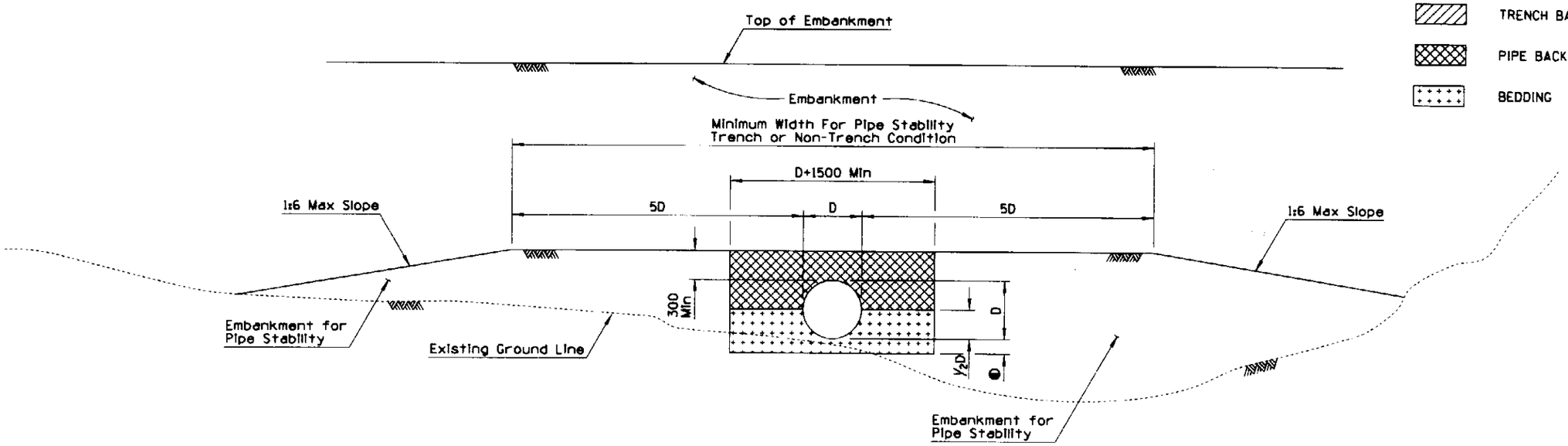

NON-TRENCH CONDITION

DESIGN APPROVED	STATE OF ARIZONA DEPARTMENT OF TRANSPORTATION DIVISION OF HIGHWAYS STANDARD DRAWINGS	ISSUE
Terry H. Otterness		6/95
APPROVED FOR DISTRIBUTION	TYPICAL PIPE INSTALLATION	DRAWING NO. C-13.15

NO	DESCRIPTION OF REVISIONS	MADE BY	DATE
3			
2			
1			

Metric

GENERAL NOTES

1. Design of end section shall conform to standards.
2. End section joint conformation shall match the pipe joints.
3. Embankment slope shall be warped to match slope of end section.

Pipe Dia	Approx Weight	Dimensions						Approx Slope
		T	A	B	C	E	F	
610	690 kg	76	241	1105	762	1867	1219	3
685	875 kg	83	267	1257	610	1867	1372	3
760	990 kg	89	305	1372	502	1873	1524	3
910	1860 kg	102	381	1600	883	2483	1829	3
1070	2440 kg	114	533	1600	889	2489	1981	3

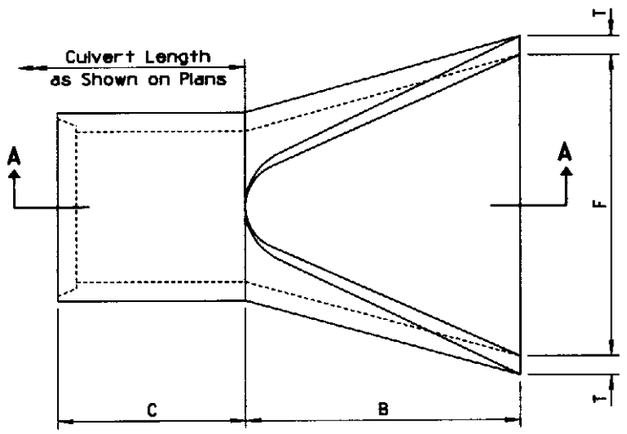

PLAN

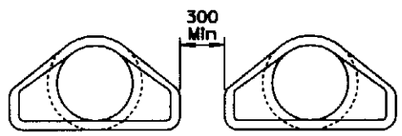

SPACING FOR MULTIPLE INSTALLATION

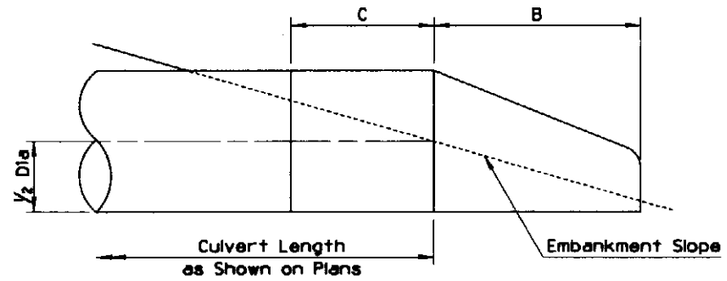

RIGHT ANGLE CULVERT

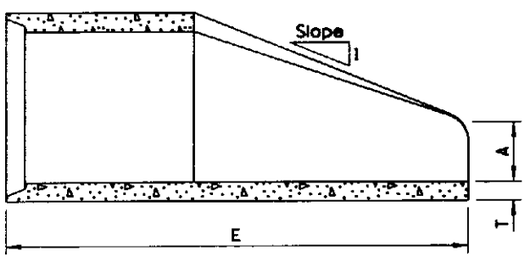

SECTION A-A

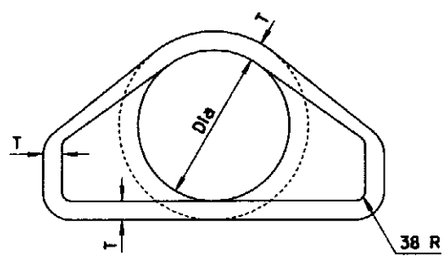

FRONT ELEVATION

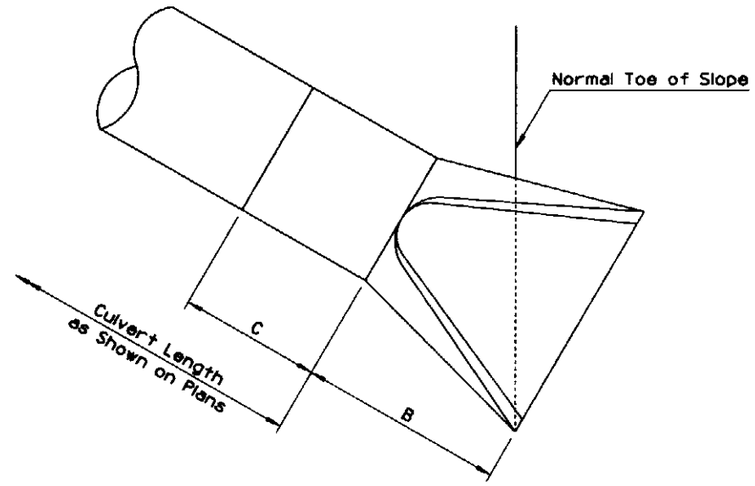

SKEWED CULVERT

DESIGN APPROVED	STATE OF ARIZONA DEPARTMENT OF TRANSPORTATION DIVISION OF HIGHWAYS STANDARD DRAWINGS	ISSUE 6/95
APPROVED FOR DISTRIBUTION	PIPE, REINFORCED CONCRETE END SECTION	DRAWING NO. C-13.20

Metric

NO	DESCRIPTION OF REVISIONS	MADE BY	DATE

Metric

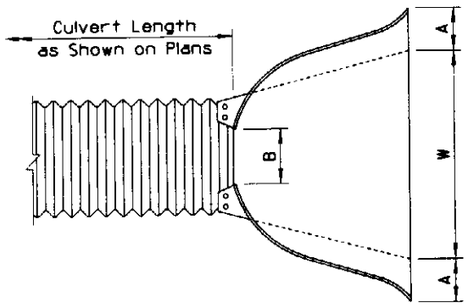

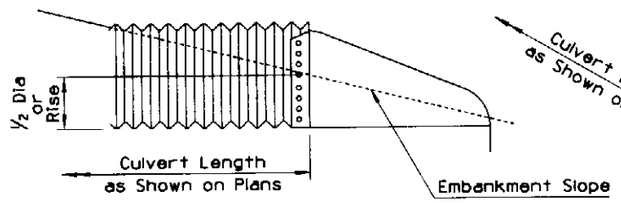

RIGHT ANGLE CULVERT

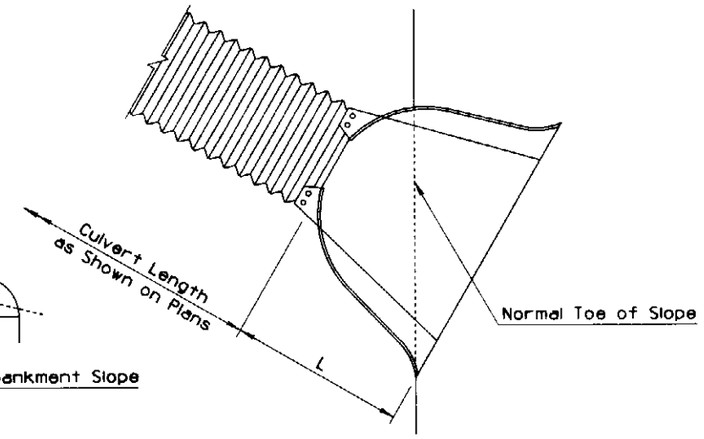

SKEWED CULVERT

GENERAL NOTES

1. The end section may be jointed to the pipe or connector section by bolts, rivets, dimpled bands, slip-seam bands or threaded rod type fasteners. For allowable connector types, see table.
2. The type 1 connector is by means of bolts or rivets. Maximum circumferential fastener spacing shall be 300 mm and with a minimum of 8 fasteners per joint. The type 1 joint may be used with either annular or helical corrugations.
3. Type 2 and 3 connectors shall be used only with annular or helical pipe with a requisite number of annular corrugations.
4. Type 4 and 5 connectors shall be only used with helical pipe.
5. All steel end section components shall be galvanized.
6. Toe of embankment shall be warped to match toe of skewed end section.
7. A berm shall be added to abnormal projections per Std C-13.10.
8. The foregoing applies to all cross section configurations.

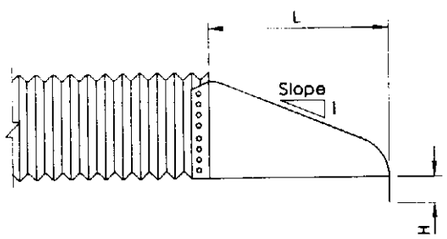

TYPE 1
RIVITED OR BOLTED CONNECTIONS

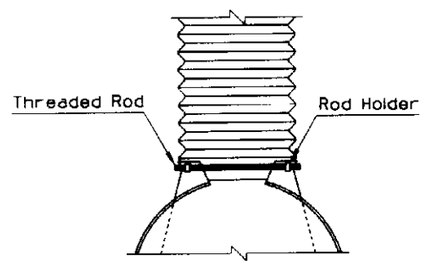

TYPE 2
THREADED ROD CONNECTIONS

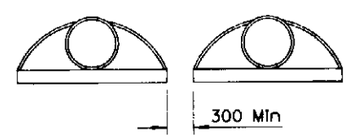

SPACING FOR MULTIPLE INSTALLATION

		Dimensions						
Pipe Dia	Ga	A ±25	B Max	H ±25	L ±38	W ±51	Approx Slope	Connection Type
460	16	203	203	152	787	914	2½	1, 2, 3, 4, 5
610	16	254	330	152	1041	1219	2½	1, 2, 3, 4, 5
760	14	311	318	203	1295	1448	2½	1, 2, 4, 5
910	14	368	305	229	1524	1829	2½	1, 2, 4, 5
1070	12	432	279	267	1753	2134	2½	1

		Dimensions							
Pipe Arch									
Span	Rise	Ga	A ±25	B Max	H ±25	L ±38	W ±51	Approx Slope	Connection Type
530	380	16	190	279	152	610	914	2½	1, 2, 3, 4, 5
710	510	16	203	406	152	813	1219	2½	1, 2, 3, 4, 5
890	610	14	254	406	152	991	1524	2½	1, 2, 4, 5
1070	740	14	305	305	191	1168	1905	2½	1, 2, 4, 5
1240	840	12	343	508	229	1346	2134	2½	1

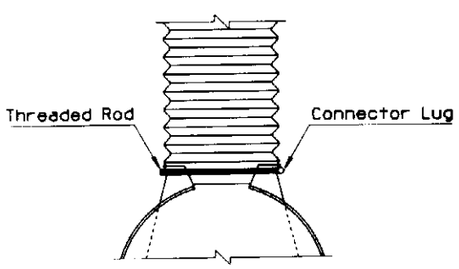

TYPE 3
THREADED ROD CONNECTIONS

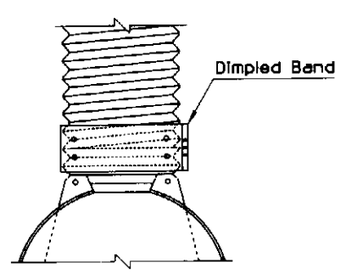

TYPE 4
DIMPLED BAND CONNECTIONS

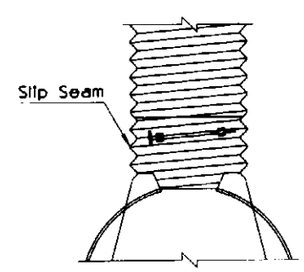

TYPE 5
SLIP SEAM CONNECTIONS

DESIGN APPROVED	STATE OF ARIZONA DEPARTMENT OF TRANSPORTATION DIVISION OF HIGHWAYS STANDARD DRAWINGS	ISSUE 6/95
APPROVED FOR DISTRIBUTION	PIPE, CORRUGATED METAL END SECTION	DRAWING NO. C-13.25

Metric

NO	DESCRIPTION OF REVISIONS	MADE BY	DATE
1			
2			
3			
4			

Metric

GENERAL NOTES

1. For lateral dimensions of invert paving, use 72° control for CMP and span for CMPA.
2. Paving shall be scored laterally at 450 mm minimum intervals along the length of the pipe.
3. Use bevel on inlet headwall only.
4. Wire mesh shall be fastened or welded to corrugation crests at intervals and in a manner approved by the Engineer. Laps shall be 150 mm minimum.
5. Paving shall not be placed untill backfilling is completed.
6. Concrete shall be Class B.
7. See Std C-14.20 for headwall and bevel dimensions not shown.

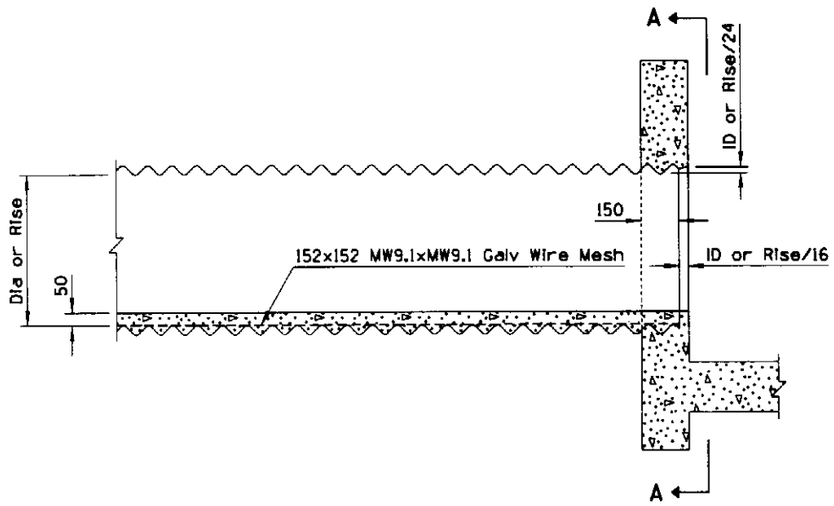

HEADWALL INSTALLATION

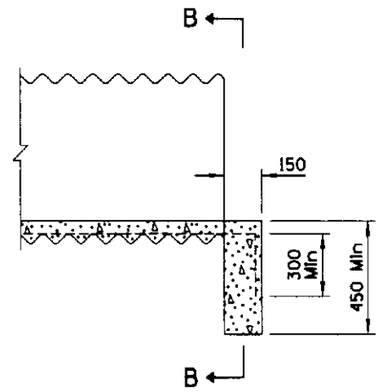

PROJECTING INSTALLATION

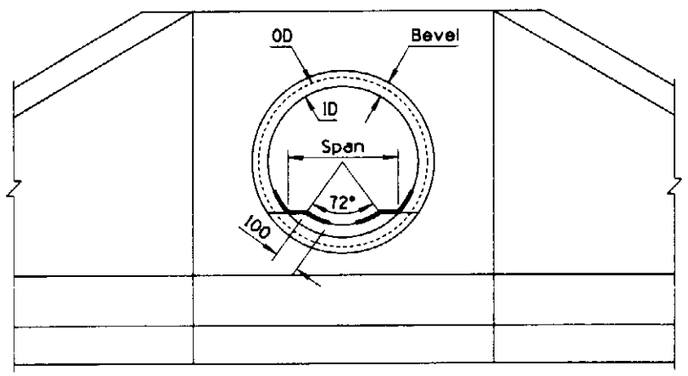

SECTION A-A

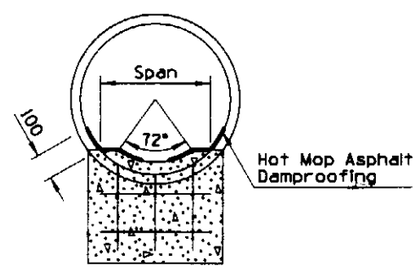

SECTION B-B

DESIGN APPROVED	STATE OF ARIZONA DEPARTMENT OF TRANSPORTATION DIVISION OF HIGHWAYS STANDARD DRAWINGS	ISSUE
		6/95
APPROVED FOR DISTRIBUTION	PIPE AND PIPE ARCH, CORRUGATED METAL CONCRETE INVERT PAVING	DRAWING NO. C-13.30

Metric

NO	DESCRIPTION OF REVISIONS	MADE BY	DATE
1			
2			
3			
4			

Metric

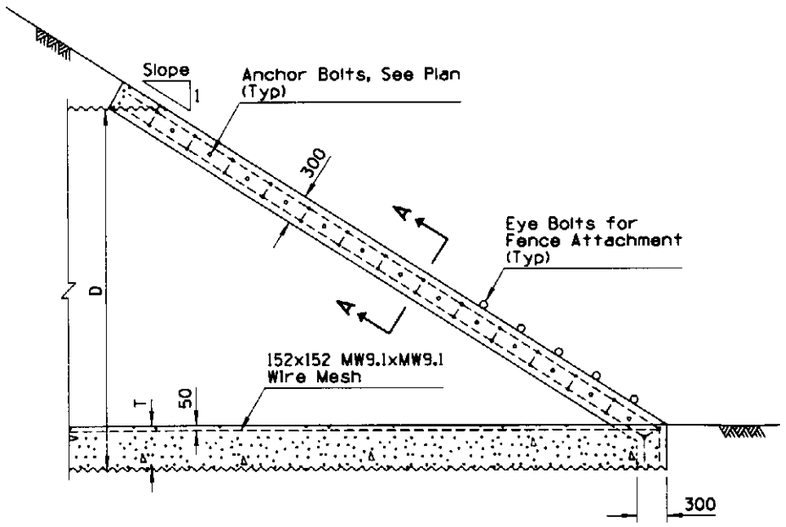

LONGITUDINAL SECTION

	D	T	S
Combination Vehicle and Cattle Pass	3660	450	Varies
Cattle Pass Only	3050	150	Varies

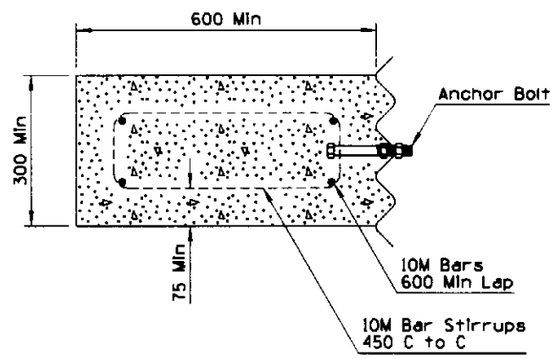

SECTION A-A

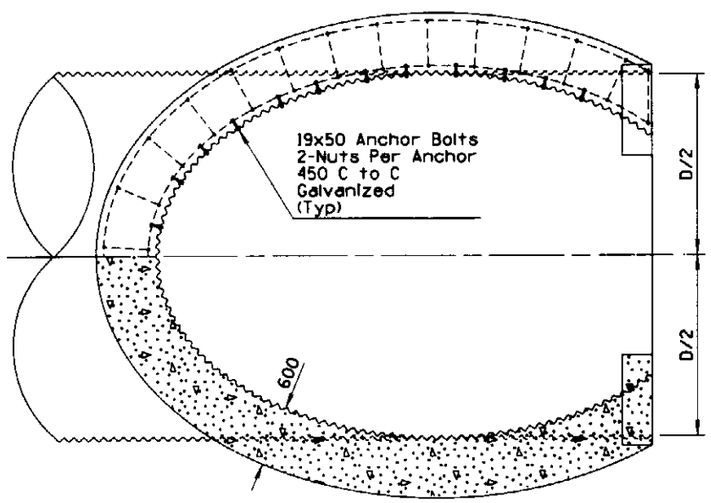

PLAN NORMAL TO SLOPE

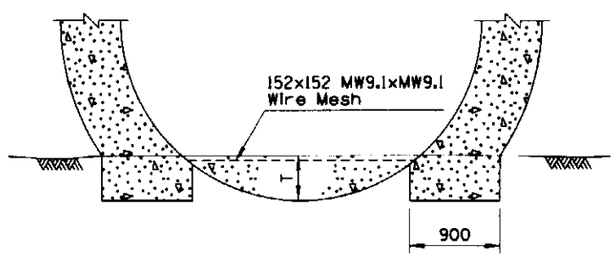

END ELEVATION

GENERAL NOTES

1. This end treatment is to be used only for those cattle and/or vehicle passes not used for drainage.
2. All concrete shall be Class B. An optional 300 mm AB invert paving base course and 150 mm of concrete may be used in the 3660 mm diameter pipe.
3. Anchor bolts shall be retained in a horizontal position during pour with final tightening a minimum of 7 days after pour.
4. Pipe shall be backfilled before concrete bond beam is constructed. Minimum forming may be used.
5. Edges of wire mesh shall be fastened or welded to corrugation crests at intervals and in a manner approved by the Engineer. Laps shall be a minimum of 150 mm.
6. For installation normal to roadway centerline only.

DESIGN APPROVED	STATE OF ARIZONA DEPARTMENT OF TRANSPORTATION DIVISION OF HIGHWAYS STANDARD DRAWINGS	ISSUE 6/95
APPROVED FOR DISTRIBUTION	PIPE, CATTLE-VEHICLE PASS, MITERED END TREATMENT	DRAWING NO. C-13.55

Metric

NO	DESCRIPTION OF REVISIONS	MADE BY	DATE
1			
2			
3			
4			

Metric

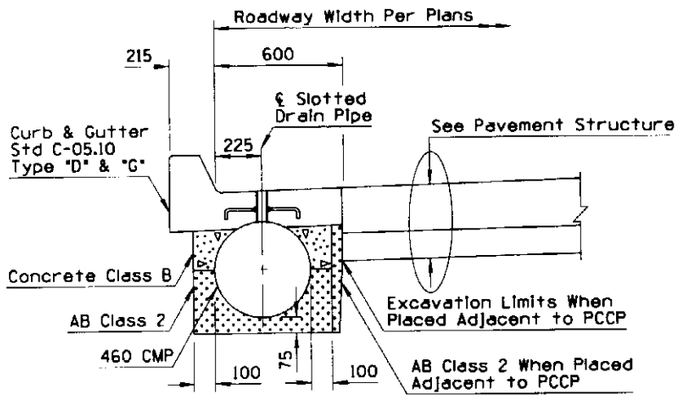

TYPE D & G CURB AND GUTTER WITH SLOTTED DRAIN

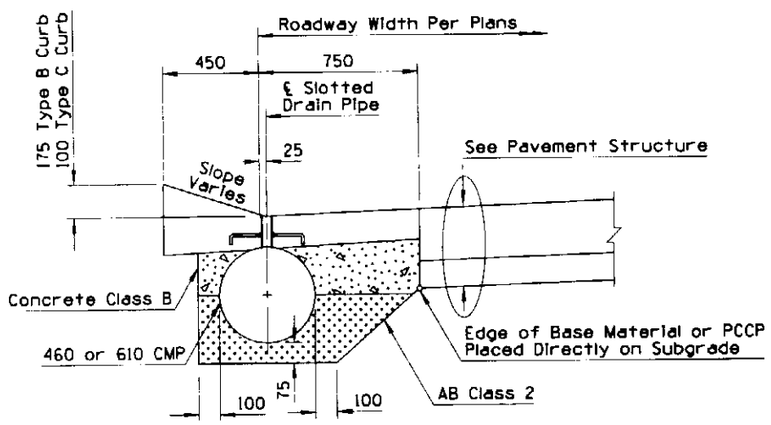

TYPE B OR C CURB AND GUTTER WITH SLOTTED DRAIN

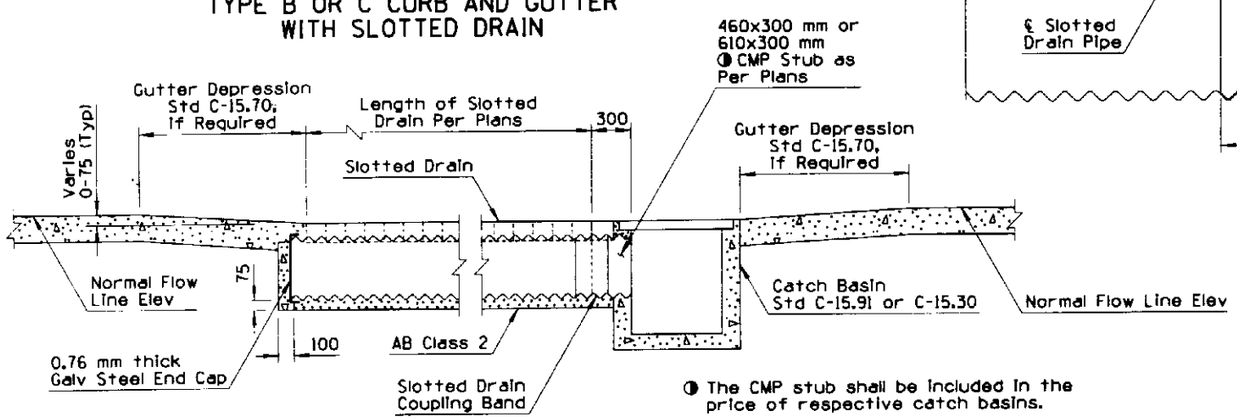

◑ The CMP stub shall be included in the price of respective catch basins.

CONNECTION OF SLOTTED DRAIN TO CATCH BASIN AND SLOTTED DRAIN END CAP

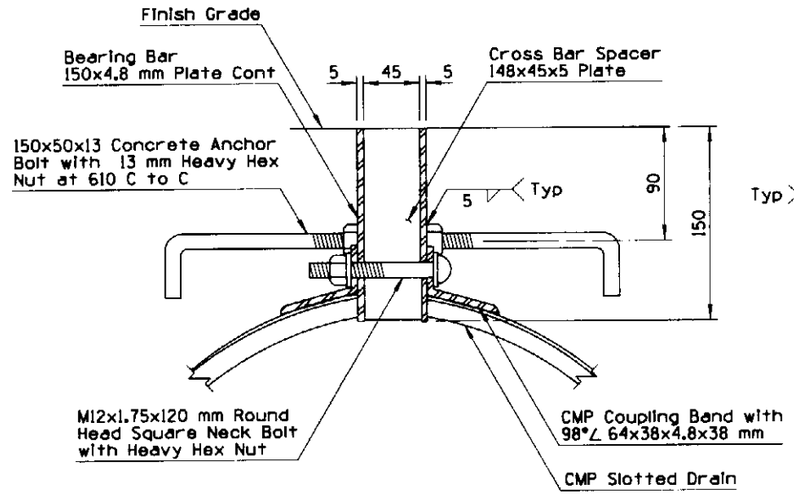

SECTION A-A

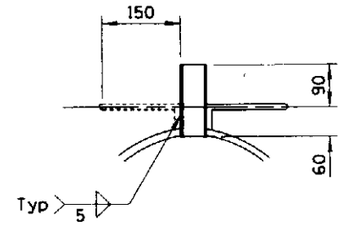

SECTION B-B

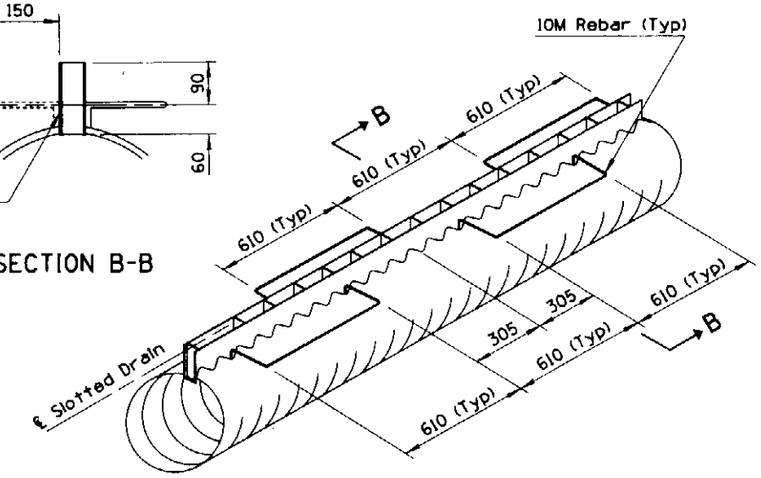

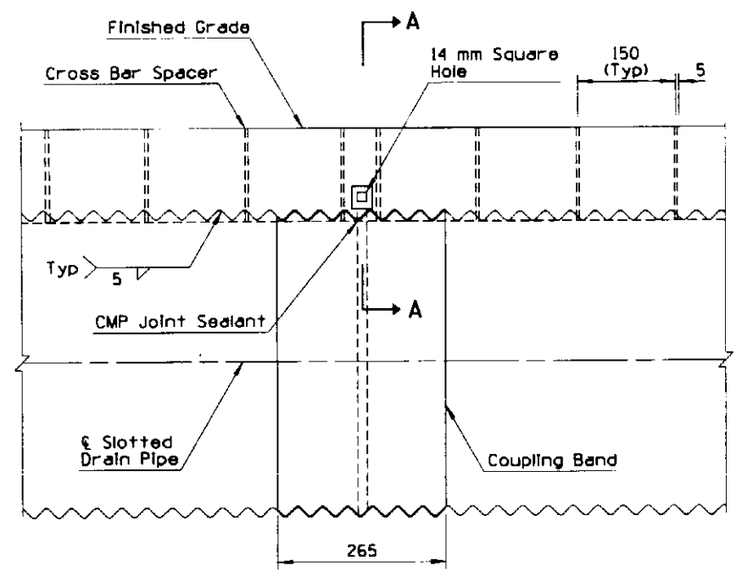

GENERAL NOTES

1. Slotted drain pipe shall be 68x13 mm corrugated steel pipe with a minimum wall thickness of 1.63 mm and shall conform to the requirements of AASHTO M36IM.
2. All concrete shall be Class B.
3. Reinforcing steel shall conform to 1003-1, 2, Grade 300.
4. Structural steel shall conform to ASTM A 36/A 36M.
5. Concrete anchors shall conform to ASTM A307 and hex nuts shall conform to ASTM A 563M, Class 5.
6. All slotted drain pipe hardware except anchor bolts and reinforcing steel shall be given two coats of #1 paint.
7. When annular pipe is used, apply water proof sealer before attaching coupling band.
8. When helical pipe is used, it shall be formed with at least one annular corrugation at each end of each pipe section. Water proof sealer shall be applied to the annular corrugation prior to attachment of coupling band.
9. Cover slot during construction with removable tape or other acceptable substitute.
10. Slotted drain pipe shall be clean at the time of final acceptance.
11. Concrete curb and gutter thru the slotted drains shall be paid for under the respective curb and gutter items.
12. Refer to curb and gutter details for dimensions and details not shown.
13. Joints in concrete curb & gutter shall match adjoining PCCP and slotted drain bands.

DESIGN APPROVED	STATE OF ARIZONA DEPARTMENT OF TRANSPORTATION DIVISION OF HIGHWAYS STANDARD DRAWINGS	ISSUE
Larry H. Otteman		6/95
APPROVED FOR DISTRIBUTION	SLOTTED DRAIN DETAILS	DRAWING NO. C-13.60
Ronald Williams		

Metric

NO	DESCRIPTION OF REVISIONS	MADE BY	DATE
1			
2			
3			
4			

Metric

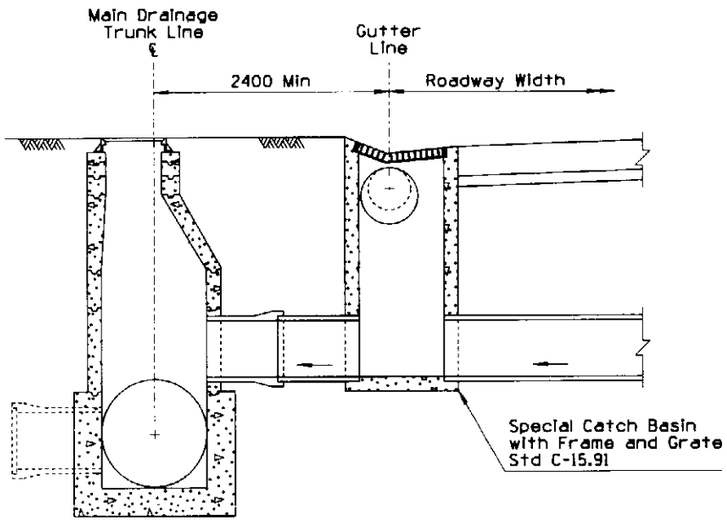

SECTION A-A
TYPICAL CONNECTION BETWEEN
CATCH BASIN AND MANHOLE

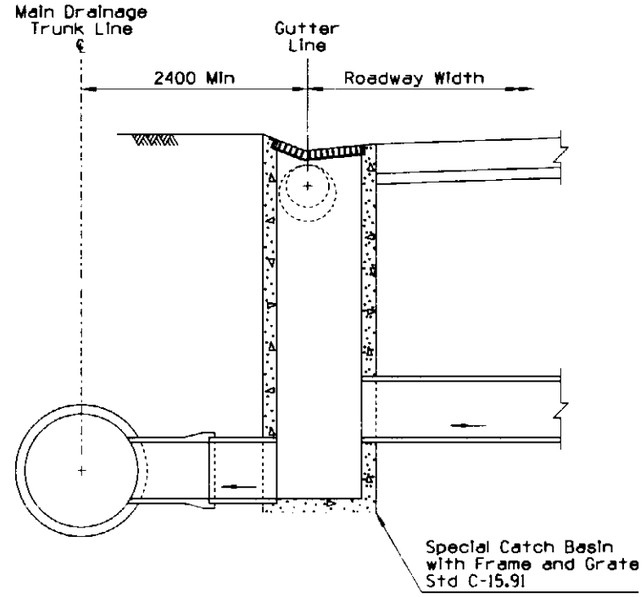

SECTION C-C
TYPICAL CONNECTION BETWEEN
CATCH BASIN AND MAIN STORM DRAIN

GENERAL NOTES

1. Pipe collars not required where direct catch basins connections can be made within 7° of a normal 90° installation, either horizontally or vertically.
2. "T" connections direct to the main drainage trunk line should be avoided and used only where manhole connections are impractical.

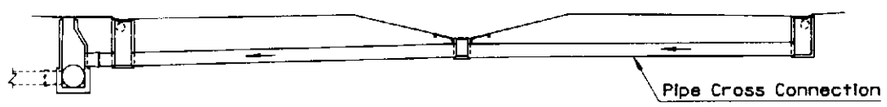

SECTION B-B

SECTION D-D

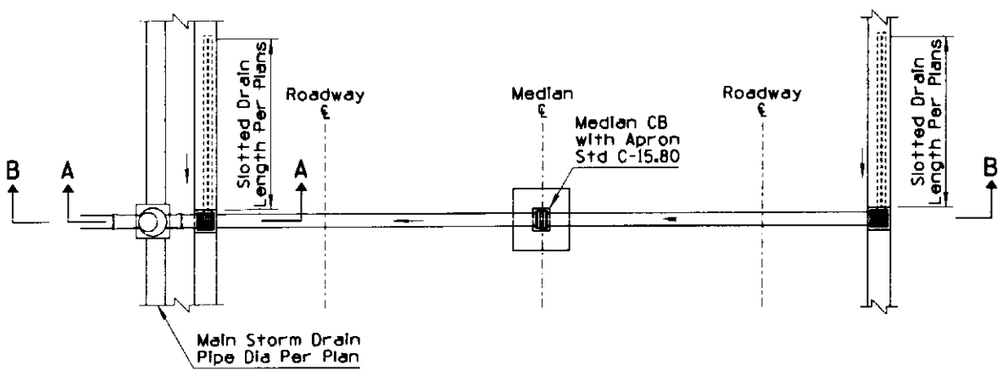

PLAN
TYPICAL SLOTTED DRAIN AND CATCH BASIN
INSTALLATION WITH MANHOLE

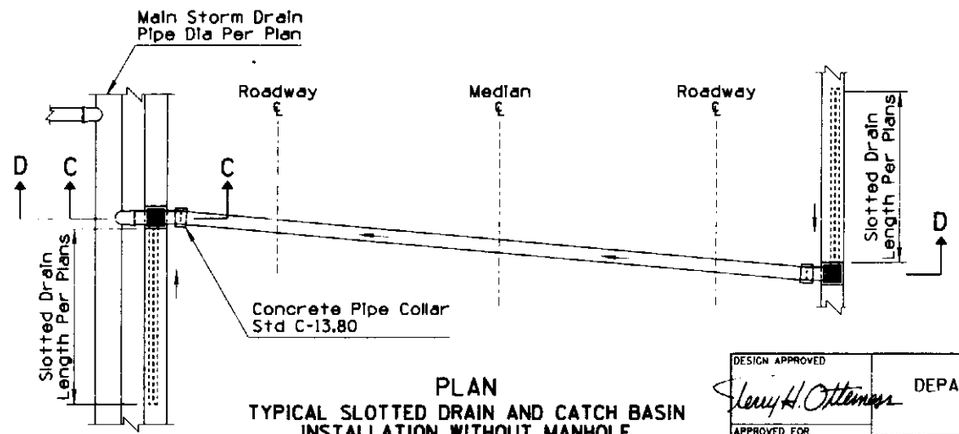

PLAN
TYPICAL SLOTTED DRAIN AND CATCH BASIN
INSTALLATION WITHOUT MANHOLE

DESIGN APPROVED Henry H. Otteman	STATE OF ARIZONA DEPARTMENT OF TRANSPORTATION DIVISION OF HIGHWAYS STANDARD DRAWINGS	ISSUE 6/95
APPROVED FOR DISTRIBUTION Ronald Williams	SLOTTED DRAIN INSTALLATION DETAILS	DRAWING NO. C-13.65

Metric

NO	DESCRIPTION OF REVISIONS	MADE BY	DATE
1			
2			
3			
4			

Metric

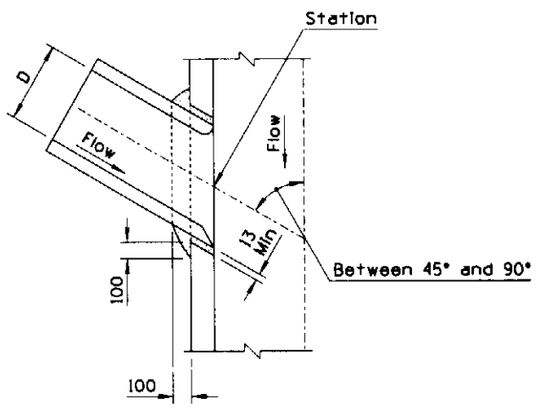

SECTION A-A

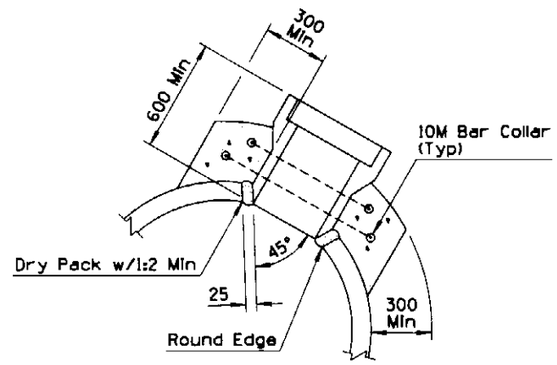

CONNECTION DETAIL
TYPE 2

GENERAL NOTES

1. Prefabricated tees shall be used when the outside diameter of the inlet pipe exceeds one half of the inside diameter of the main storm drain, except when the manholes are shown on plans.
2. Centerline of the inlet pipe shall intersect the centerline of the main storm drain except when elevation "S" is shown on plans.
3. If ∠ is 45° or less, type 1 shall be used.
4. All concrete shall be class B.
5. All reinforcing steel shall conform to 1003-1, 2, Grade 300.
6. Reinforcing steel shall have 50 mm minimum cover.

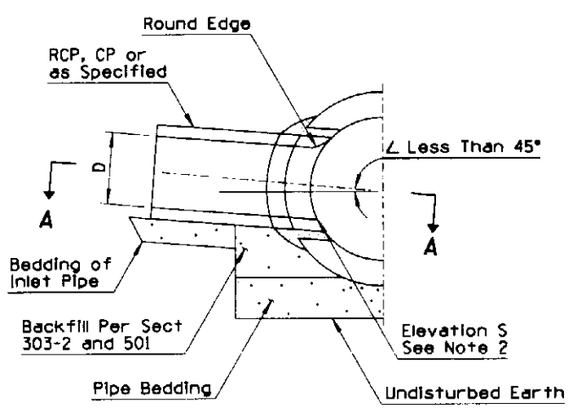

SIDE INLET
TYPE 1

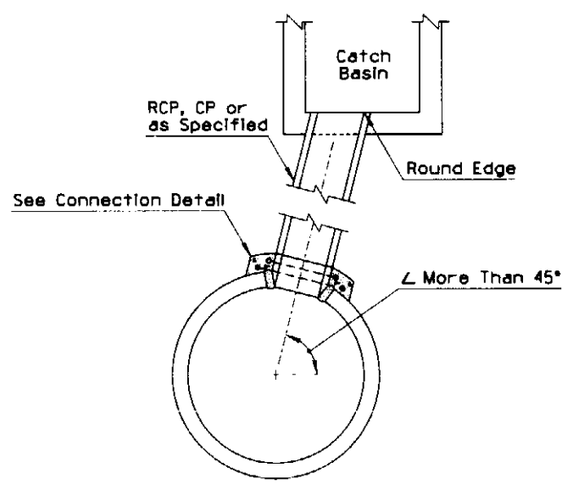

CATCH BASIN ABOVE STORM DRAIN
TYPE 2

DESIGN APPROVED	STATE OF ARIZONA DEPARTMENT OF TRANSPORTATION DIVISION OF HIGHWAYS STANDARD DRAWINGS	ISSUE 6/95
APPROVED FOR DISTRIBUTION	STORM DRAIN CONNECTION DETAILS	DRAWING NO. C-13.70

Metric

NO	DESCRIPTION OF REVISIONS	MADE BY	DATE
1			
2			
3			
4			

Metric

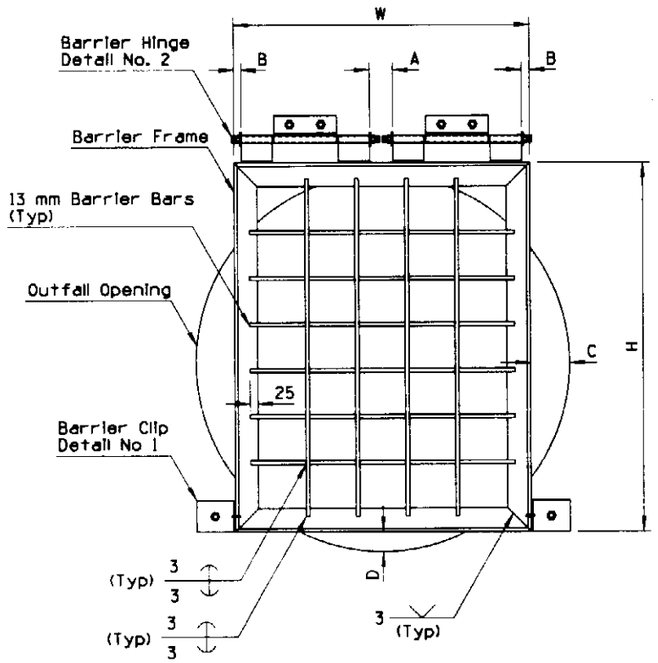

PIPE ACCESS BARRIER FRONT ELEVATION

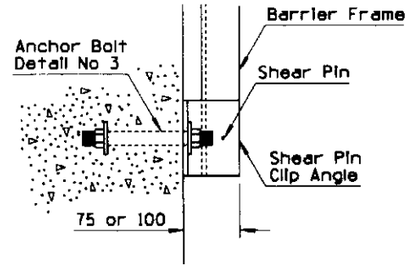

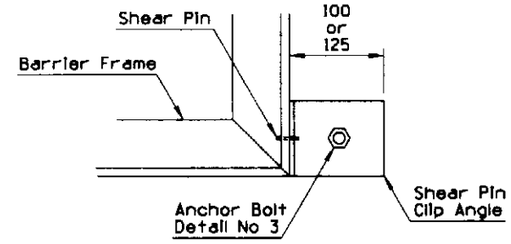

DETAIL NO. 1

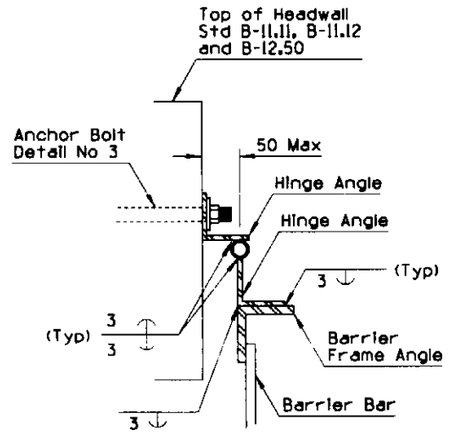

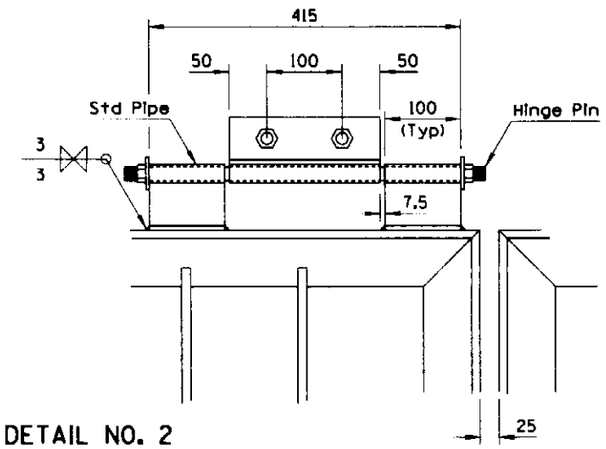

DETAIL NO. 2

GENERAL NOTES

1. All Shear pin angles shall fit snug and true to face. Cover with waterproof grease prior to installation of pin.
2. Shear pin holes in the angle shall be drilled for a tight fit of the pins.
3. Both ends of the shear pins shall be peened after installation.
4. Shear pin material shall be commercially pure aluminum wire alloy 1100, Temper 0, Federal Spec. QQ-A-411.
5. Galvanize all ferrous parts after fabrication.
6. Frame and hinge angles shall have the outstanding legs out.
7. All structural steel shall be ASTM A 36/A 36M.
8. Barrier bars shall be equally spaced.
9. Hinge pin material shall be bolt stock and threaded on both ends so nut and lock washer are flush with the lower angle. Cover pin with waterproof grease prior to installation. Upset or damage exposed threads after installation.

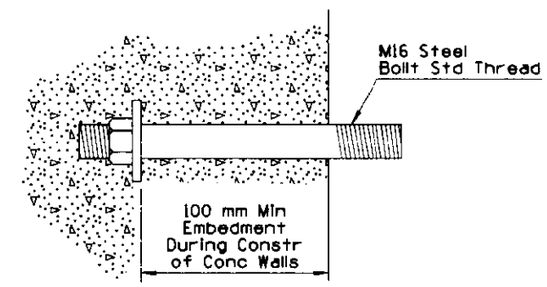

DETAIL NO. 3

ACCESS BARRIER GATE DIMENSION SCHEDULE

Size of Outfall Pipe	No. of Barrier Gates	Frame Angles	Shear Pin Clip Angles	Shear Pins	Hinge Pins	Hinge Angles	Hinge Standard Pipe	No. & Length Of Vert. Bars	No. & Length Of Horz. Bars	H (Out to Out of Frame Angles)	W (Out to Out of Frame Angles)	A	B	C	D	Str. Steel (kg)
760	1	51x51x6.4	102x102x6.4	2-3*	13*	51x51x6.4	19	4-790	4-865	840	915	85	0	-35	50	35.4
910	1	51x51x6.4	102x102x6.4	2-3*	13*	51x51x6.4	19	4-790	4-865	840	915	85	0	-3[illegible]	88	35.4
1070	1	51x51x6.4	102x102x6.4	2-3*	13*	51x51x6.4	19	4-1040	5-865	1090	915	85	0	78	13	40.2
1220	1	76x76x11.1	127x76x6.4	2-3*	19*	64x64x6.4	25.4	4-1170	6-865	1270	965	85	25	128	25	81.3
1370	1	76x76x11.1	127x76x6.4	2-3*	19*	64x64x6.4	25.4	5-1320	7-1015	1420	1115	135	75	128	50	93.7
1520	1	76x76x11.1	127x76x6.4	2-3*	19*	64x64x6.4	25.4	6-1475	8-1170	1575	1270	240	100	125	75	106.9
1680	1	76x76x11.1	127x76x6.4	2-3*	19*	64x64x6.4	25.4	7-1630	9-1320	1730	1420	290	150	130	100	120.8
1830	2	76x76x11.1	127x76x6.4	2-3*	19*	64x64x6.4	25.4	4-1755*	9-865*	1855	965	85	25	-63	125	201.2
1980	2	76x76x11.1	127x76x6.4	2-3*	19*	64x64x6.4	25.4	4-1910*	10-865*	2010	965	85	25	13	125	212.5
2130	2	76x76x11.1	127x76x6.4	2-3*	19*	64x64x6.4	25.4	4-2060*	11-865*	2160	965	85	25	88	125	223.7
2290	2	76x76x11.1	127x76x6.4	2-3*	19*	64x64x6.4	25.4	4-2210*	12-915*	2310	1015	85	50	118	125	239.0
2440	2	76x76x11.1	127x76x6.4	2-3*	19*	64x64x6.4	25.4	5-2365*	13-990*	2465	1090	110	75	118	125	262.6

* Per Gate

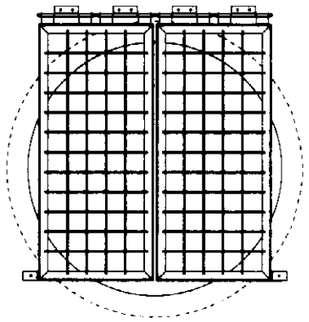

INSTALLATION DETAIL
FOR DOUBLE GATES

DESIGN APPROVED	STATE OF ARIZONA DEPARTMENT OF TRANSPORTATION DIVISION OF HIGHWAYS STANDARD DRAWINGS	ISSUE 6/95
APPROVED FOR DISTRIBUTION	STORM DRAIN OUTLET DETAILS	DRAWING NO. C-13.75 Sheet 1 of 2

Metric

NO	DESCRIPTION OF REVISIONS	MADE BY	DATE
3			
2			
1			

Metric

GENERAL NOTES

1. Compact soil at end of pipe plug to 95% of maximum density.
2. If depth of cover is less than 1.5 m or greater than 3 m increase plug thickness a minimum of 100 mm.

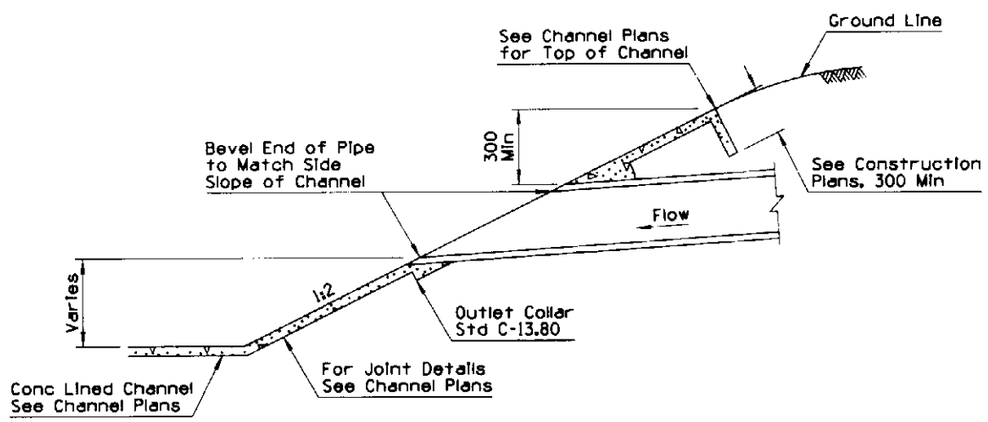

DRAINAGE OUTLET INTO CHANNEL

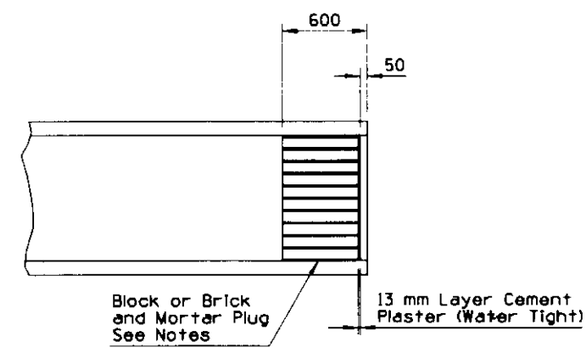

STORM DRAIN PLUG

DESIGN APPROVED	STATE OF ARIZONA DEPARTMENT OF TRANSPORTATION DIVISION OF HIGHWAYS STANDARD DRAWINGS	ISSUE 6/95
APPROVED FOR DISTRIBUTION	STORM DRAIN OUTLET DETAILS	DRAWING NO. C-13.75 Sheet 2 of 2

Metric

NO	DESCRIPTION OF REVISIONS	MADE BY	DATE

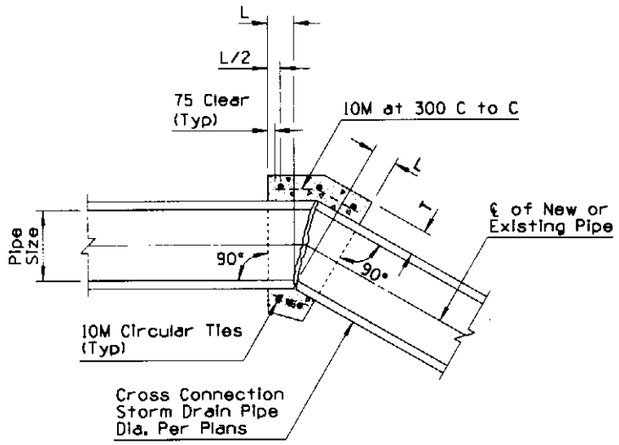

CONCRETE PIPE COLLAR

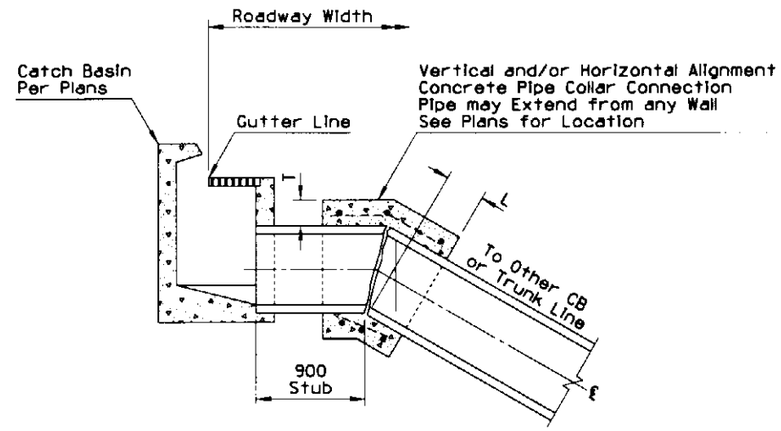

TYPICAL LATERAL CONNECTIONS TO
CATCH BASINS WITH CONCRETE COLLARS

GENERAL NOTES

1. All Concrete shall be Class B.
2. All reinforcing steel shall conform to 1003-1, 2, Grade 300.
3. All reinforcing steel shall have 75 mm minimum clear cover.
4. A concrete collar shall be required where pipes of different diameters or materials are joined or where the design change in alignment or grade exceeds that allowed for a standard joint.
5. When pipes of different diameters are joined with a concrete collar, "I" & "T" shall be those of the larger diameter.
6. The diameter of the circular ties shall be the outside diameter of pipe + T.
7. Pipe ends to be trimmed such that the maximum distance between pipes at any point is 50 mm.

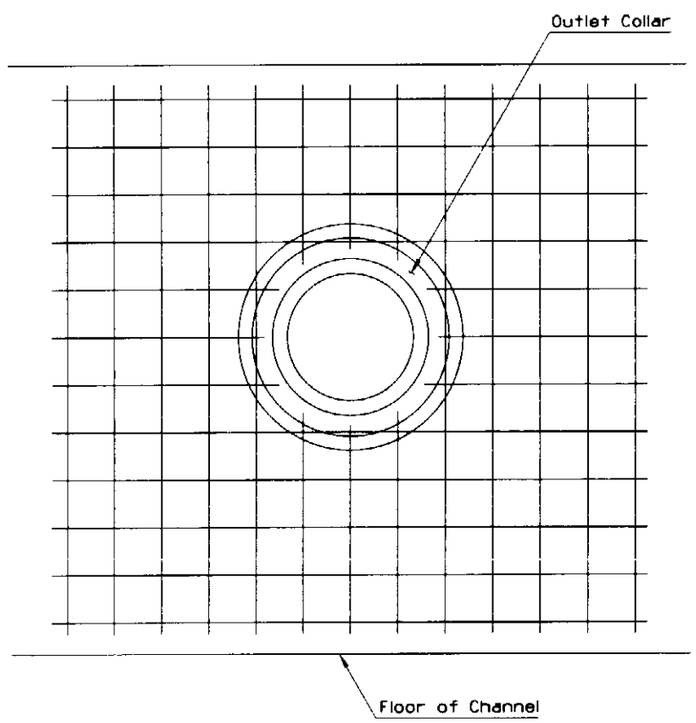

OUTLET COLLAR DETAIL

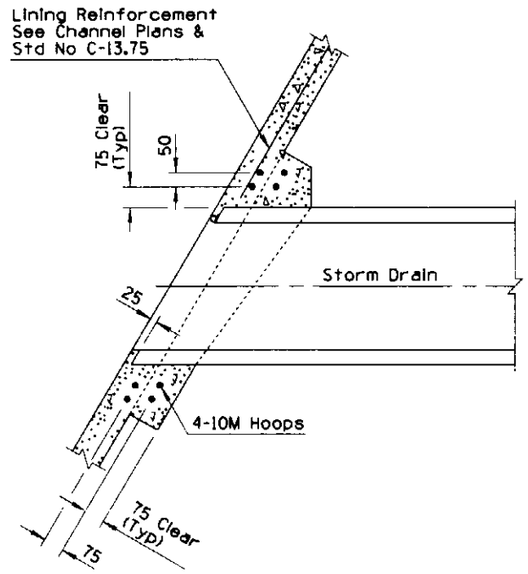

PIPE COLLAR TABLE			
Pipe Size	L	T	10M Ties
300	300	100	3
460	300	125	3
610	300	150	3
760	450	200	3
910	450	200	3
1070	525	250	4
1220	525	250	4
1370	525	250	4
1520	525	275	4
1680	600	275	5
1830	600	350	5
1980	600	350	5
2130	675	400	5
2440	675	400	5

DESIGN APPROVED	STATE OF ARIZONA DEPARTMENT OF TRANSPORTATION DIVISION OF HIGHWAYS STANDARD DRAWINGS	ISSUE
APPROVED FOR DISTRIBUTION	PIPE COLLAR DETAILS	DRAWING NO. C-13.80

NO	DESCRIPTION OF REVISIONS	MADE BY	DATE
1			
2			
3			
4			

Metric

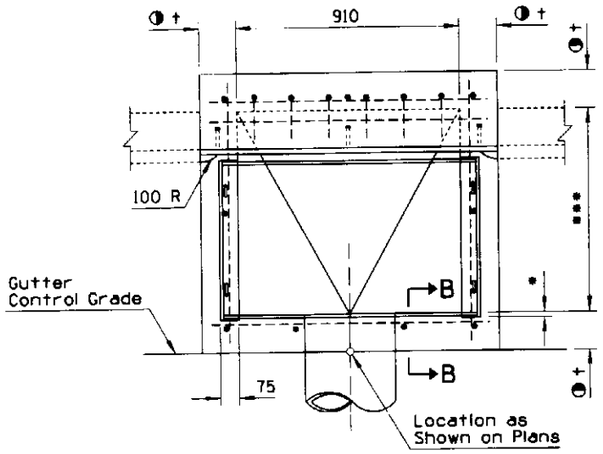

PLAN - CATCH BASIN TYPE 1 - SINGLE

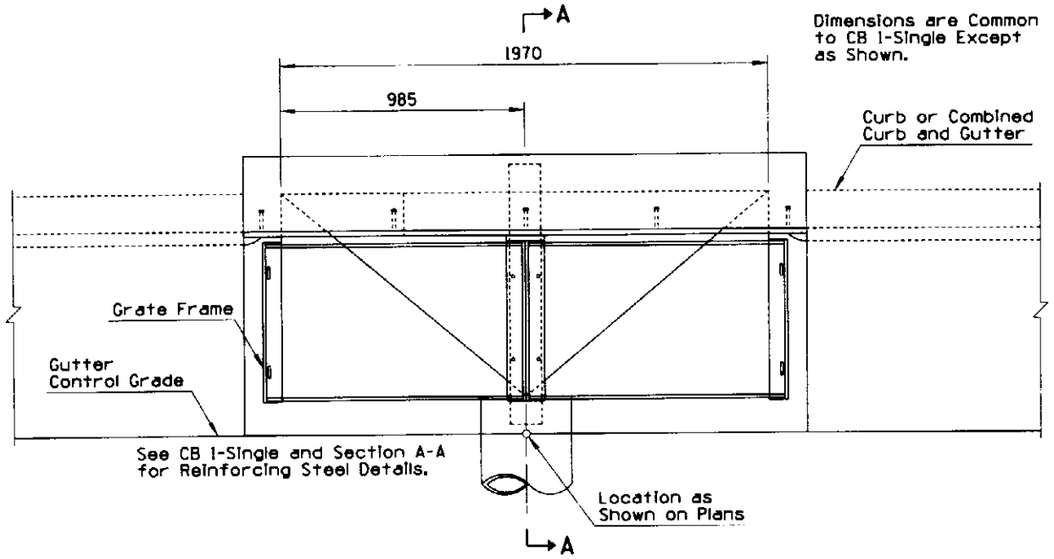

PLAN - CATCH BASIN TYPE 1 - DOUBLE

GENERAL NOTES

1. Pipes can be placed in any wall.
2. Sump Floor shall have a wood trowel finish and a minimum 1:4 slope in all directions to outlet.
3. All structural steel shall be ASTM A 36/A 36M.
4. Welding shall be in accordance with Standard Welding Specifications.
5. Grate, frame, beam and nose angle shall be given one shop coat of No. 1 paint.
6. All concrete shall be Class B.
7. Construction joints and drains shall be placed to meet field conditions. See Std C-15.70.
8. Any specified inlet depression shall be warped to opening according to Std C-15.70.
9. Curb opening areas, sq. m, for type 1-single and type 1-double equal 0.023 and 0.049, respectively, for each 25 mm of "h" + inlet depression - 60 mm. See Std C-15.70.
10. See Stds C-15.50 and C-15.60 for grate and frame details and grate opening areas.
11. * - 19 mm for longitudinal and 75 mm for transverse bar grates.

    ** - 610 mm for LW, LB, EF, TW and TB series 1 grates. 455 mm for LW, LB, EF, TW and TB series 2 grates. Use 455 mm with combined curb and gutter.

    *** - 825 mm for LW, LB, EF, TW and TB series 1 grates. 675 mm for LW, LB, EF, TW and TB series 2 grates.

    ◑t = 150 mm when H is 2.5 m or less. 200 mm when H is greater than 2.5 m. See Section B-B.

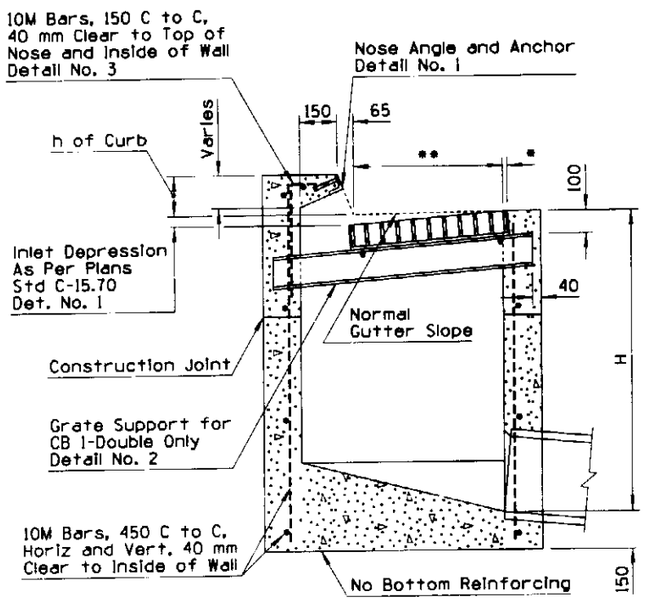

SECTION A-A

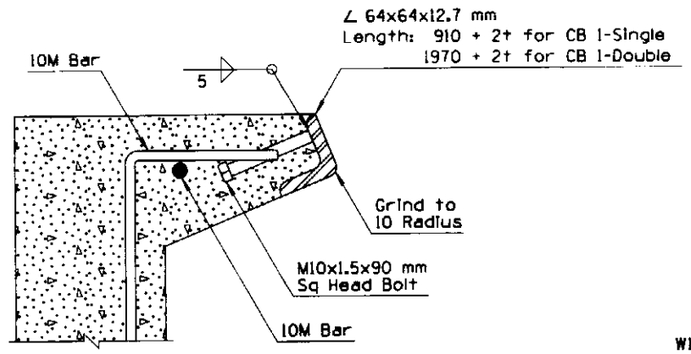

DETAIL NO. 1

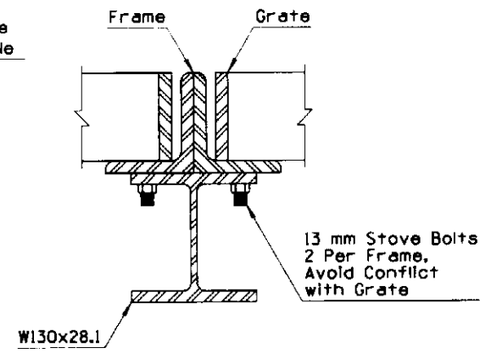

DETAIL NO. 2

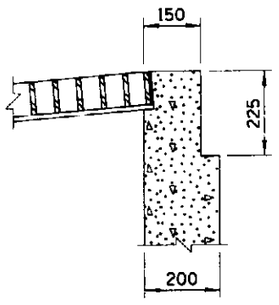

SECTION B-B
USE THIS SECTION WHEN t=200 mm

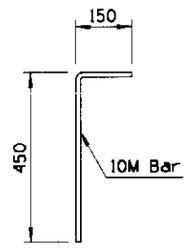

DETAIL NO. 3

DESIGN APPROVED	STATE OF ARIZONA DEPARTMENT OF TRANSPORTATION DIVISION OF HIGHWAYS STANDARD DRAWINGS	ISSUE
Terry H. Otterness		6/95
APPROVED FOR DISTRIBUTION Donald Williams	CATCH BASIN, TYPE 1	DRAWING NO. C-15.10

Metric

NO	DESCRIPTION OF REVISIONS	MADE BY	DATE
1			
2			
3			
4			

Metric

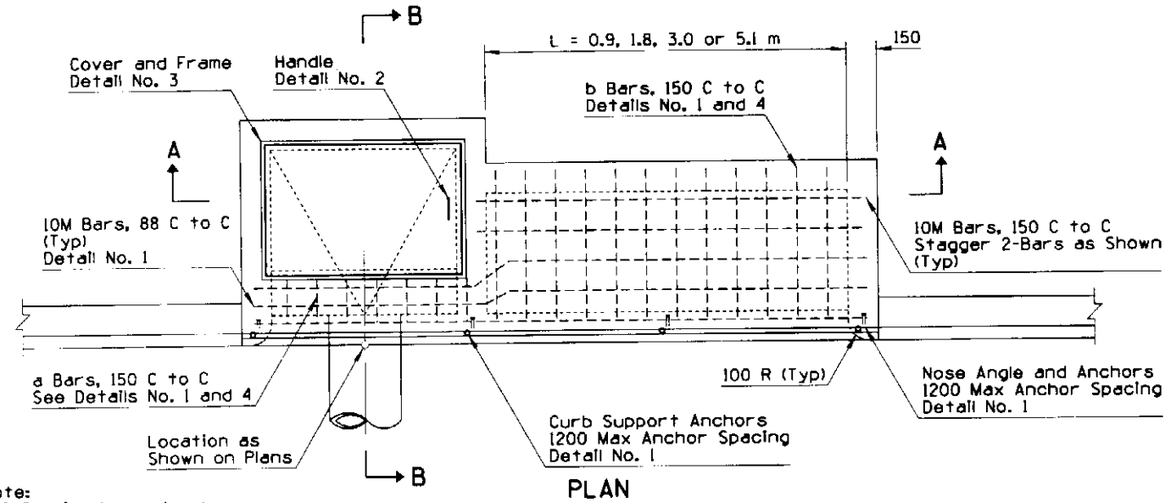

PLAN

Note:
Reinforcing bars shown are for roof slab only. See Sections for other Reinforcing.

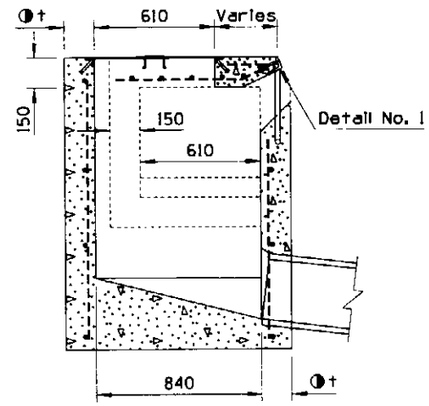

SECTION B-B

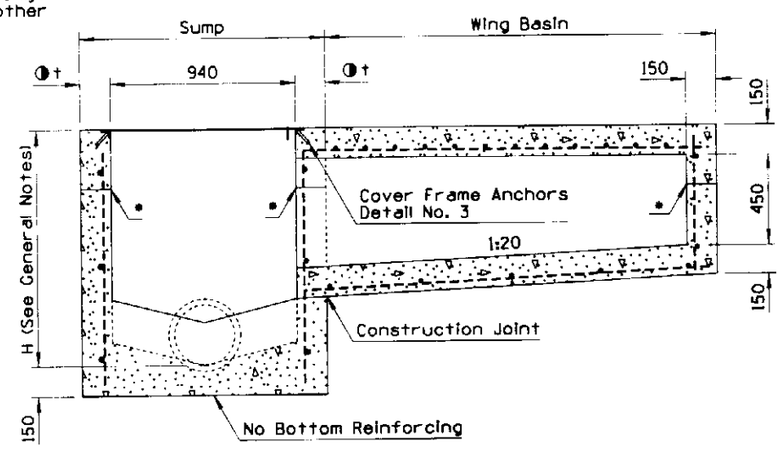

SECTION A-A

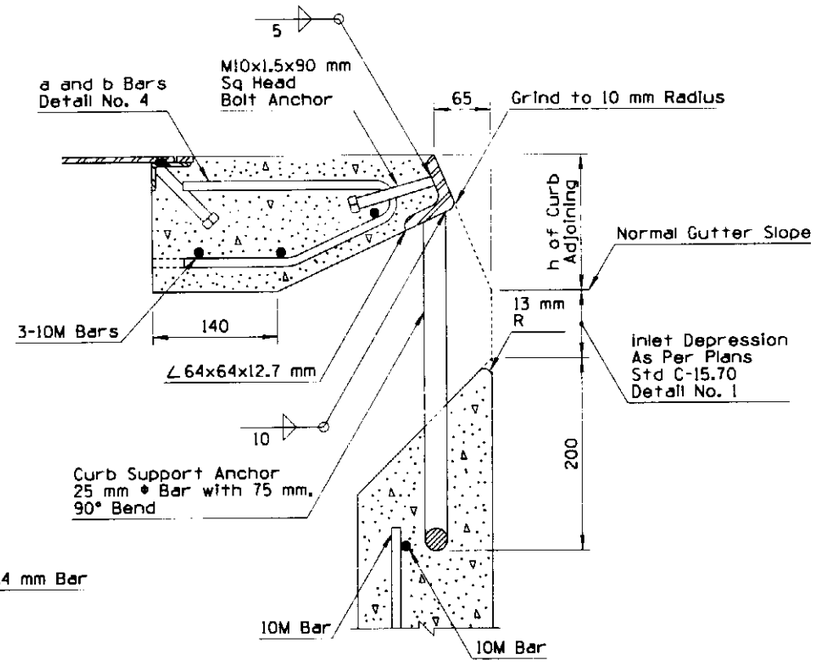

DETAIL NO. 1

GENERAL NOTES

1. Type 3 - sump only.
2. Type 3-Wing (illustrated), sump with wing basin upstream.
3. Type 3-Double wing, sump with symetrical wing basin each side.
4. Pipes can be placed in any wall except wall adjacent to wing basin.
5. Sump floor shall have a wood trowel finish and a minimum slope of 1:4 in all directions toward outlet pipe.
6. Any specified inlet depression shall be warped to opening according to Std C-15.70.
7. All structural steel shall be ASTM A 36/A 36M.
8. Nose angle, frame and cover shall be given one shop coat of No. 1 paint.
9. All concrete shall be class B.
10. All reinforcing bars shall be 10M, 450 mm C to C both ways and 40 mm clear to inside of walls and outside of wing basin floor except as shown.
11. Curb opening area (m^2) per 25 mm of curb "h" + inlet depression = curb opening length (m) x 0.040.
12. Welding shall be in accordance with Standard Welding Specifications.
13. • - Construction joints at or below bottom of curb line. Construction joints and drains shall be placed to meet field conditions. Std C-15.70.

    t = 150 mm when H is 2.5 m or less.
    200 mm when H is greater than 2.5 m.
    See Section B-B, Std C-15.10.

    H = 850 mm min when L = 0.9 m
    900 mm min when L = 1.8 m
    950 mm min when L = 3.0 m
    1100 mm min when L = 5.1 m

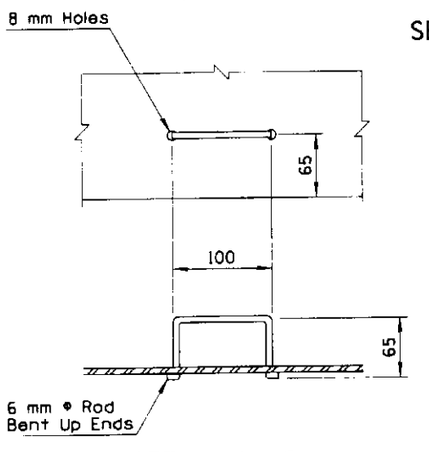

DETAIL NO. 2

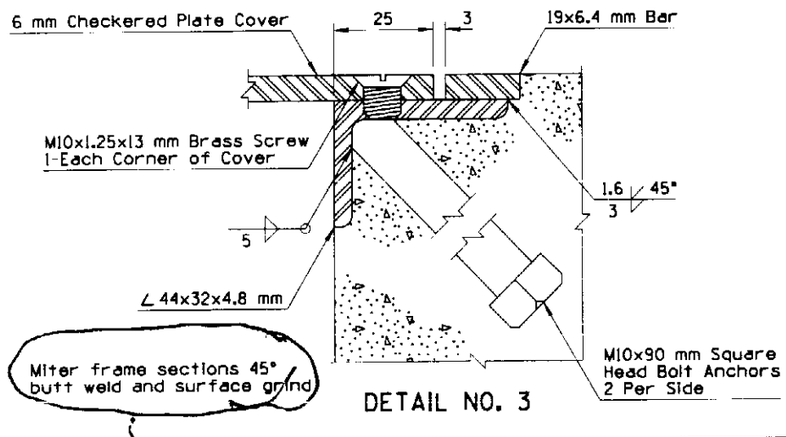

Miter frame sections 45° butt weld and surface grind

DETAIL NO. 3

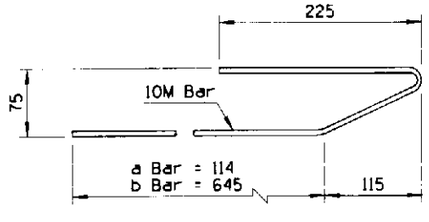

DETAIL NO. 4

DESIGN APPROVED	STATE OF ARIZONA DEPARTMENT OF TRANSPORTATION DIVISION OF HIGHWAYS STANDARD DRAWINGS	ISSUE
APPROVED FOR DISTRIBUTION		6/95
	CATCH BASIN, TYPE 3	DRAWING NO. C-15.20

Metric

NO	DESCRIPTION OF REVISIONS	MADE BY	DATE

Metric

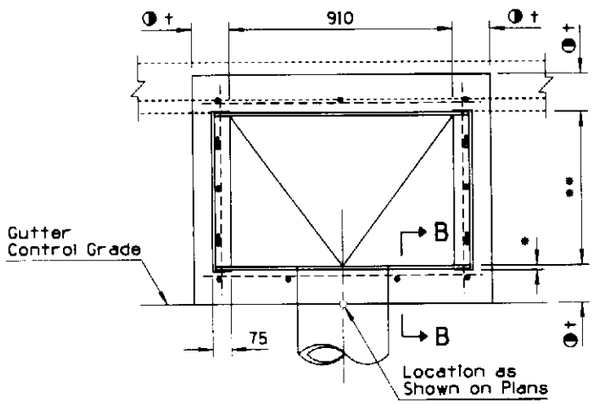

PLAN - CATCH BASIN TYPE 4 - SINGLE

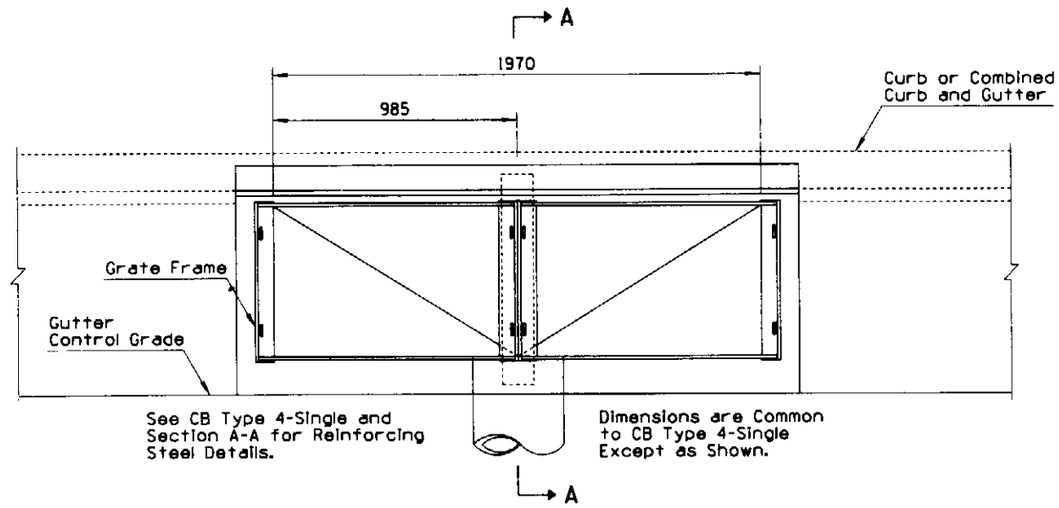

PLAN - CATCH BASIN TYPE 4 - DOUBLE

GENERAL NOTES

1. Pipes can be placed in any wall.
2. Sump floor shall have a wood trowel finish and a minimum 1:4 slope in all directions toward outlet pipe.
3. Curb over catch basin shall not be constructed until catch basin concrete has set for a minimum of 24 hours.
4. See Stds C-15.50 and C-15.60 for grate and frame details and opening areas.
5. Any specified inlet depression shall be warped to opening according to Std C-15.70.
6. All structural steel shall be ASTM A 36/A 36M.
7. Grate, frame and beam shall be given one shop coat of No. 1 paint.
8. All concrete shall be Class B.
9. Construction joints and drains shall be placed to meet field conditions. Std C-15.70.
10. * - 19 mm for longitudinal and 75 mm for transverse bar grates.

    ** - 610 mm for LW, LB, EF, TW and TB series 1 grates. 455 mm for LW, LB, EF, TW and TB series 2 grates. Use 455 mm with combined curb and gutter.

    t = 150 mm when H is 2.5 m or less.
    200 mm when H is greater than 2.5 m.
    See Section B-B.

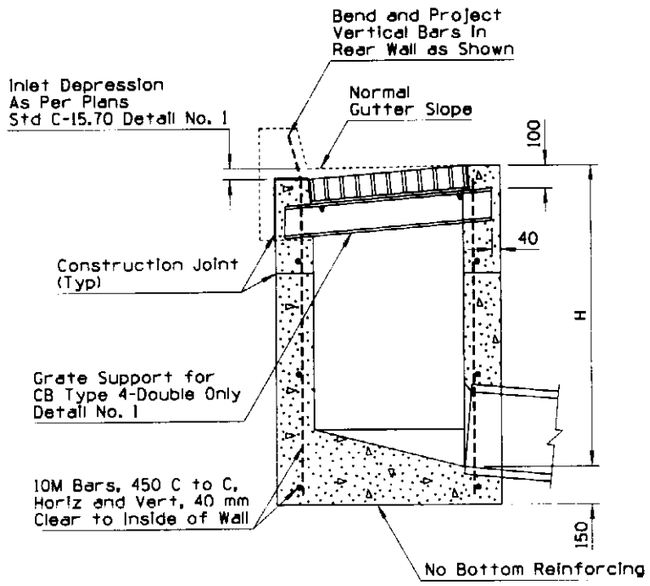

SECTION A-A

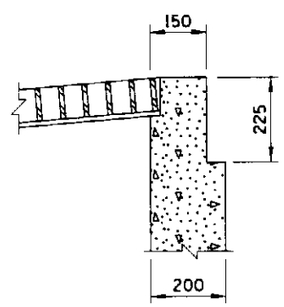

SECTION B-B
USE THIS SECTION WHEN t=200 mm

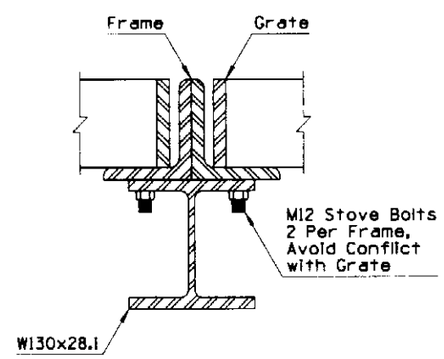

DETAIL NO. 1

DESIGN APPROVED	STATE OF ARIZONA DEPARTMENT OF TRANSPORTATION DIVISION OF HIGHWAYS STANDARD DRAWINGS	ISSUE 6/95
APPROVED FOR DISTRIBUTION	CATCH BASIN, TYPE 4	DRAWING NO. C-15.30

Metric

NO	DESCRIPTION OF REVISIONS	MADE BY	DATE
1			
2			
3			
4			

Metric

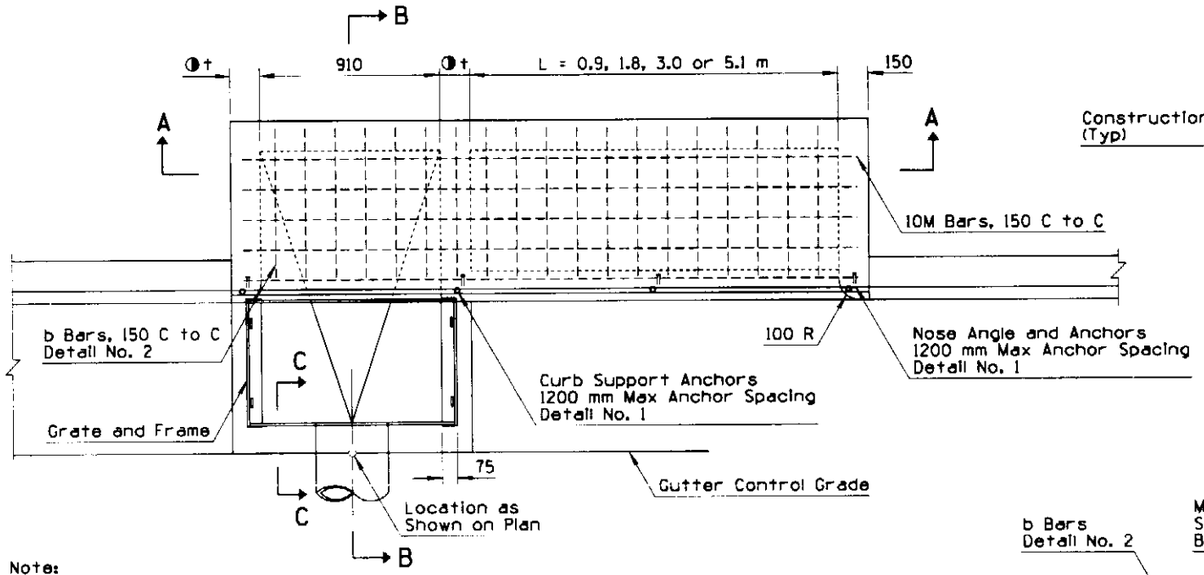

Note:
Reinforcing bars shown are for roof slab only. See sections for other reinforcing.

PLAN

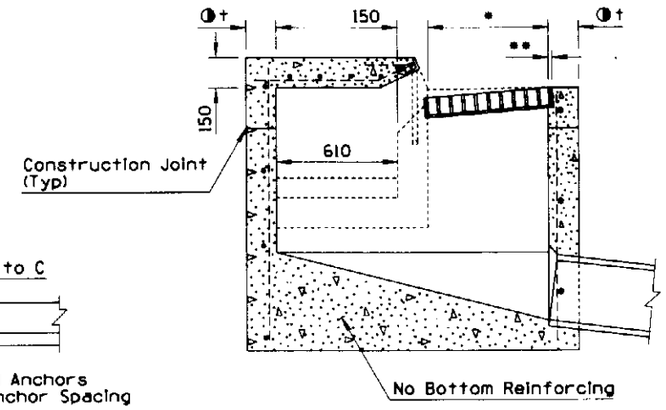

SECTION B-B

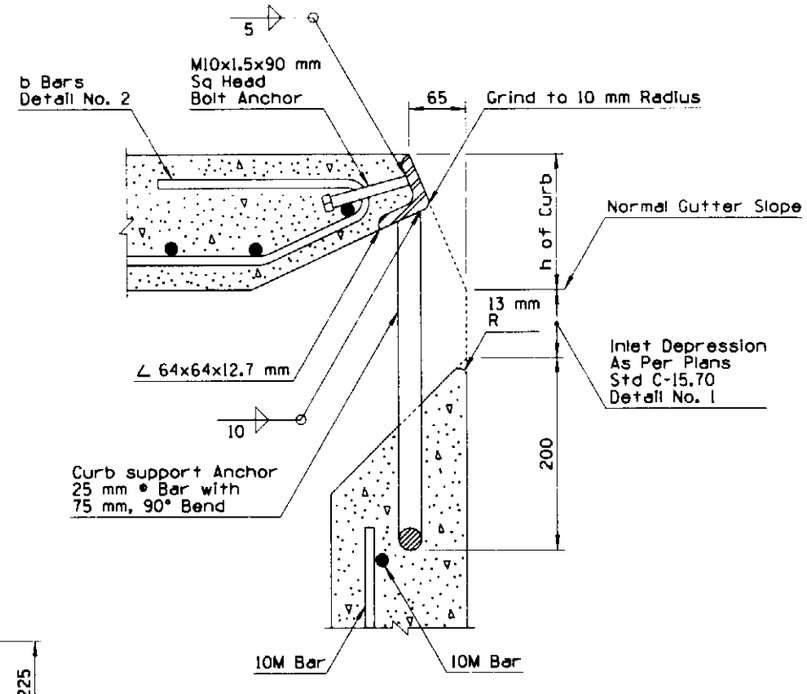

DETAIL NO. 1

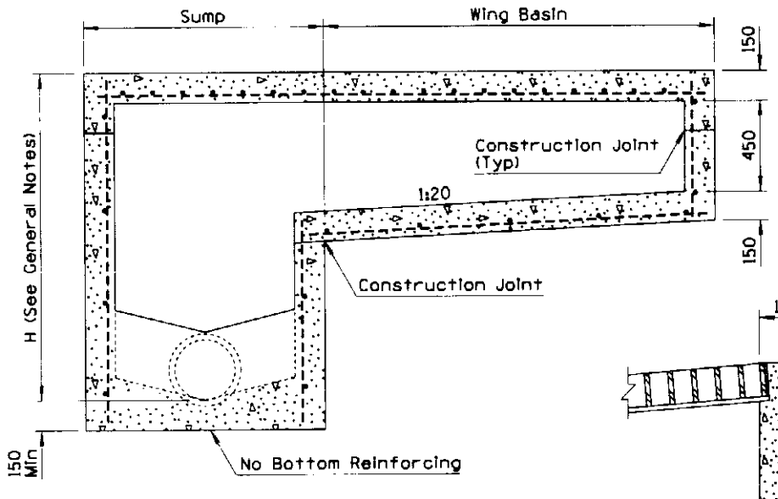

SECTION A-A

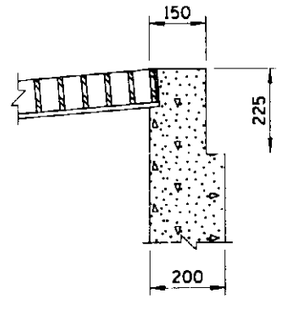

SECTION C-C
USE THIS SECTION WHEN t=200 mm

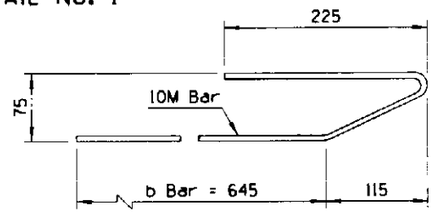

DETAIL NO. 2

GENERAL NOTES

1. Type 5 - sump only.
2. Type 5 - Single Wing, (Illustrated), sump with wing basin upstream.
3. Type 5 - Double Wing, sump with symmetrical wing basins each side.
4. Pipes can be placed in any wall except wall adjacent to a wing basin.
5. Sump floor shall have a wood trowel finish and a minimum slope of 1:4 in all directions toward outlet pipe.
6. Any specified inlet depression shall be warped to opening according to Std C-15.70.
7. All structural steel shall be ASTM A 36/A 36M.
8. Nose angle shall be given one shop coat of No. 1 paint.
9. All concrete shall be class B.
10. All reinforcing bars shall be 10M, 450 mm C to C both ways and 40 mm clear to inside of walls and outside of wing basin floor except as shown.
11. Curb opening area (m^2) per 25 mm of curb "h" + inlet depression = curb opening length (m) x 0.040.
12. Welding shall be in accordance with Standard Welding Specifications.
13. See Std C-15.50 and C-15.60 for grate and frame details and opening areas.
14. Construction joints and drains shall be placed to meet field conditions. Std C-15.70.
15. * - 610 mm for LW, LB, EF, TW and TB series 1 grate. 455 mm for LW, LB, EF, TW, and TB series 2 grates. Use 455 mm with combined curb and gutter.

    ** - 19 mm for longitudinal and 75 mm for transverse bar grates.

    ◑t = 150 mm when H is 2.5 m or less.
    200 mm when H is greater than 2.5 m.
    See Section C-C.

    H = 975 mm min. when L = 0.9 m
    1025 mm min. when L = 1.8 m
    1075 mm min. when L = 3.0 m
    1200 mm min. when L = 5.1 m

DESIGN APPROVED	STATE OF ARIZONA DEPARTMENT OF TRANSPORTATION DIVISION OF HIGHWAYS STANDARD DRAWINGS	ISSUE 6/95
APPROVED FOR DISTRIBUTION	CATCH BASIN, TYPE 5	DRAWING NO. C-15.40

Metric

NO.	DESCRIPTION OF REVISIONS	MADE BY	DATE
1			
2			
3			
4			

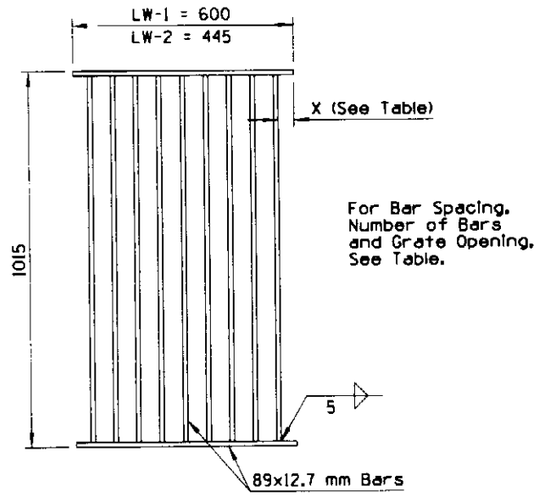

PLAN

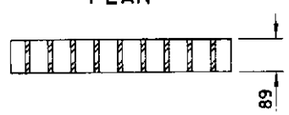

SECTION
GRATES TYPE LW-1 AND LW-2

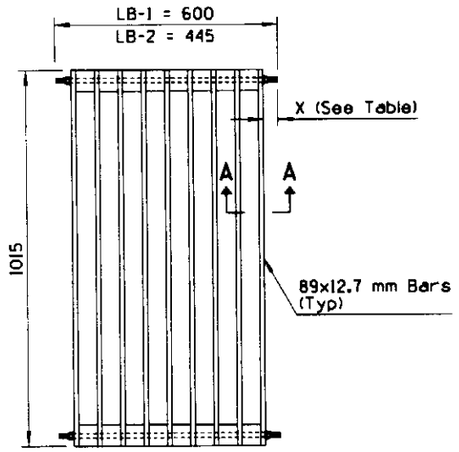

PLAN
GRATES TYPE LB-1 AND LB-2

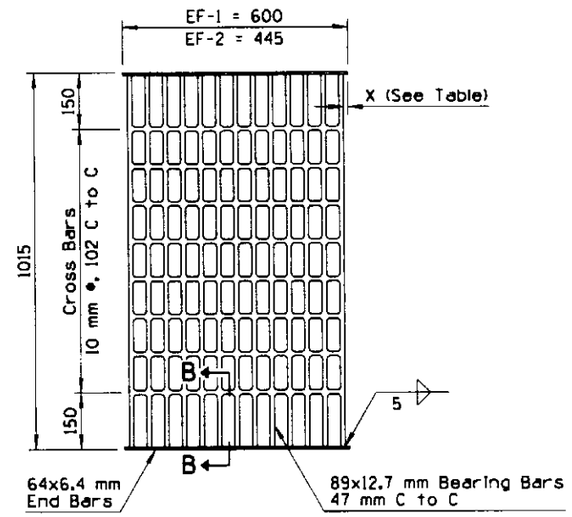

PLAN
GRATES TYPE EF-1 AND EF-2

GENERAL NOTES

1. LW = Longitudinal welded
   LB = Longitudinal bolted
   EF = Electroforged
2. Grates type LW and EF are restricted to slopes of 3% or less.
3. Use grate type LB on longitudinal grades in excess of 3% or as an alternate to Type LW on grades of 3% or less.
4. Grating units and frames shall be fabricated from structural steel ASTM A 36/A 36M except as noted.
5. All welding shall be in accordance with Standard Welding Specifications.
6. The completed assembly shall be given one shop coat of No. 1 paint.
7. Frames and grates shall fit to a maximum rock of 2.4 mm at any point.

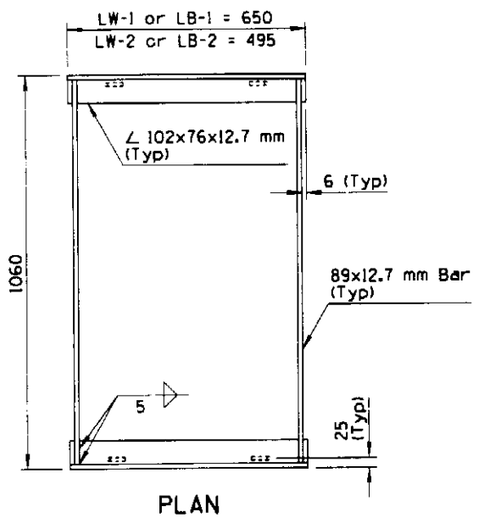

PLAN

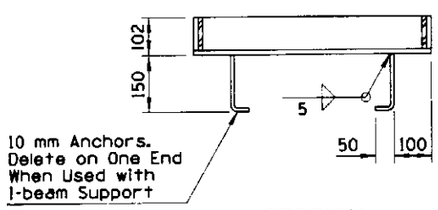

SECTION
FRAME

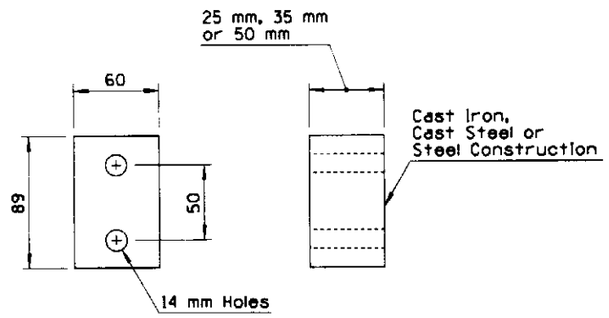

BAR SPACER DETAIL

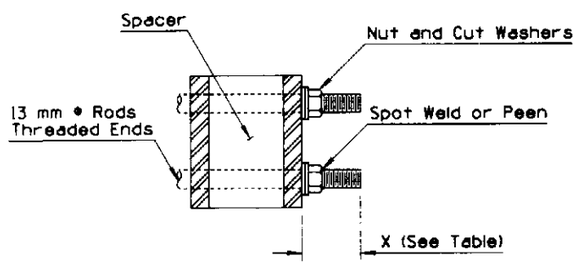

SECTION A-A

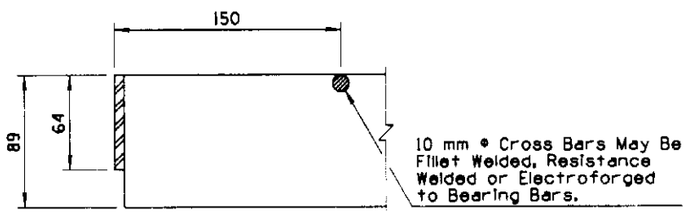

SECTION B-B

Grate Type	Clear Bar Spacing	No. Bars	X	Grate Opening Sq m
LW or LB - 1.0	25	16	8	0.369
LW or LB - 1.1	35	13	8	0.403
LW or LB - 1.2	50	9	40	0.450
EF - 1	35	13	8	0.369
LW or LB - 2.0	25	12	8	0.277
LW or LB - 2.1	35	9	27	0.311
LW or LB - 2.2	50	7	27	0.334
EF - 2	35	10	3	0.274

DESIGN APPROVED	STATE OF ARIZONA DEPARTMENT OF TRANSPORTATION DIVISION OF HIGHWAYS STANDARD DRAWINGS	ISSUE 6/95
APPROVED FOR DISTRIBUTION	CATCH BASIN, GRATES, LONGITUDINAL BARS	DRAWING NO. C-15.50

NO	DESCRIPTION OF REVISIONS	MADE BY	DATE
1			
2			
3			
4			

Metric

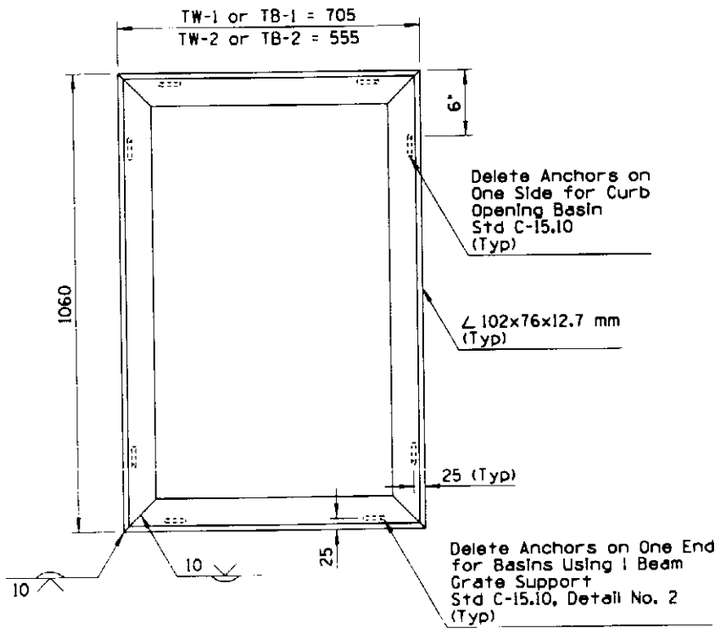

PLAN

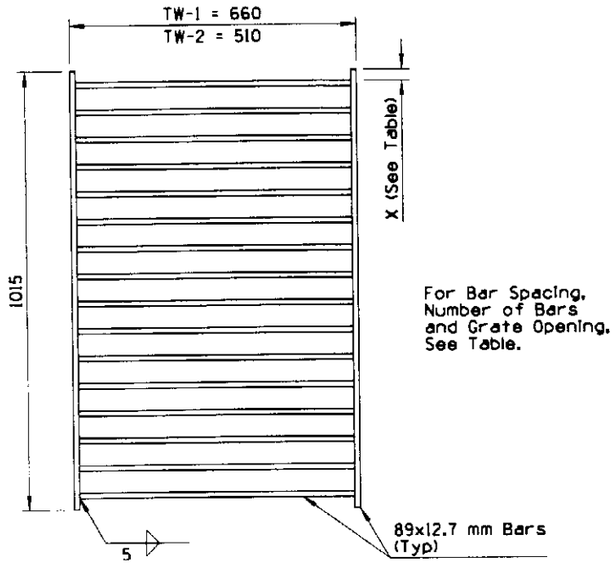

PLAN

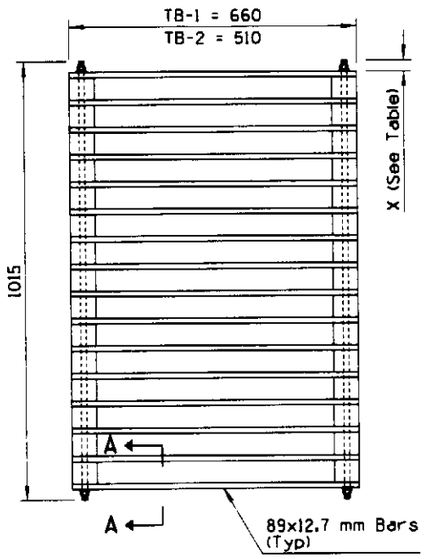

PLAN
GRATES TYPE TB-1 AND TB-2

GENERAL NOTES

1. LW = Longitudinal welded
   LB = Longitudinal bolted
   EF = Electroforged
2. Restrict use to grades of 3% or less.
3. Grating units and frames shall be fabricated from structural steel ASTM A 36/A 36M except as noted.
4. All welding shall be in accordance with Standard Welding Specifications.
5. The completed assembly shall be given one shop coat of No. 1 paint.
6. Frames and grates shall fit to a maximum rock of 2.4 mm at any point.
7. For Type EF grates, see Std C-15.50.

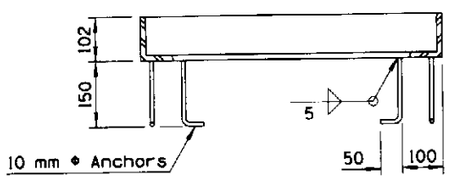

SECTION
FRAME

SECTION
GRATES TYPE TW-1 AND TW-2

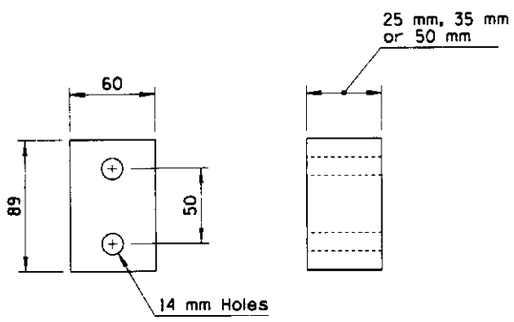

BAR SPACER DETAIL
CAST IRON, CAST STEEL OR STEEL BAR STOCK

Grate Type	Clear Bar Spacing	No. Bars	X	Grate Opening Sq m
TW or TB - 1.0	25	26	26	0.298
TW or TB - 1.1	35	21	21	0.308
TW or TB - 1.2	50	16	28	0.433
TW or TB - 2.0	25	26	26	0.216
TW or TB - 2.1	35	21	21	0.224
TW or TB - 2.2	50	16	28	0.246

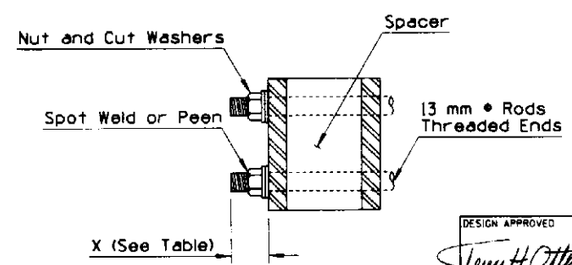

SECTION A-A

DESIGN APPROVED	STATE OF ARIZONA DEPARTMENT OF TRANSPORTATION DIVISION OF HIGHWAYS STANDARD DRAWINGS	ISSUE
APPROVED FOR DISTRIBUTION	CATCH BASIN, GRATES TRANSVERSE BARS	DRAWING NO. C-15.60

Metric

NO	DESCRIPTION OF REVISIONS	MADE BY	DATE
1			
2			
3			
4			

Metric

GENERAL NOTES

1. No inlet depression shall extend into a traffic lane.
2. Maximum combined gutter and inlet depression is 75 mm. See Detail No. 1.
3. Maximum distance along curb between catch basins where full gutter depression is used is 3.0 m.
4. See Std. C-15.80 for aprons used with C-15.80 Catch Basin.

LEGEND

- ○ - Normal pavement or gutter flow line elevation.
- ● - Depressed elevation.
- ◒ - Straight grade with downward slope.
- W - Normal gutter width per Std. C-05.10.
- ▲ - Types 1, 3, & 5.
- ◐ - Type 4 & C-15.91.

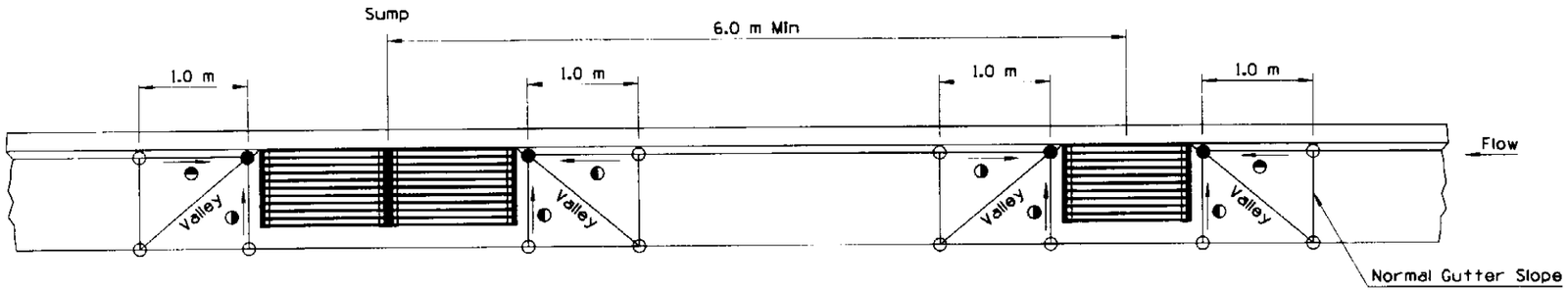

CATCH BASIN SPACING AT SUMP CONDITION

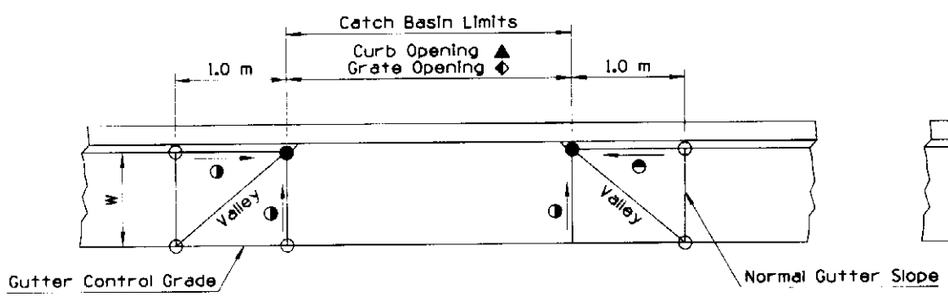

INLET DEPRESSION

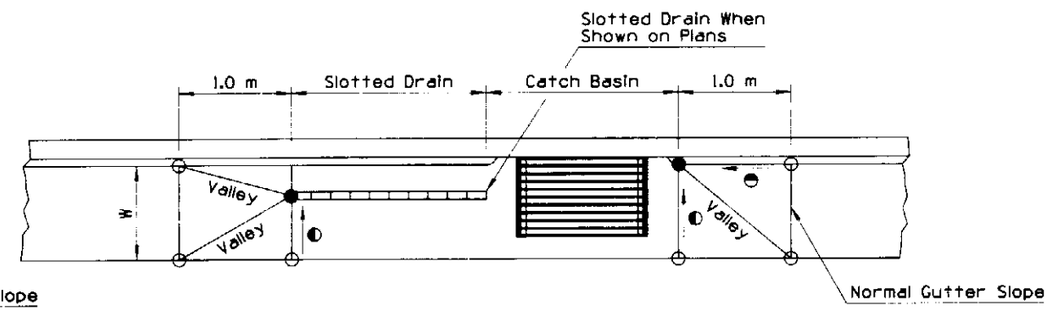

INLET DEPRESSION
CATCH BASIN WITH SLOTTED DRAIN

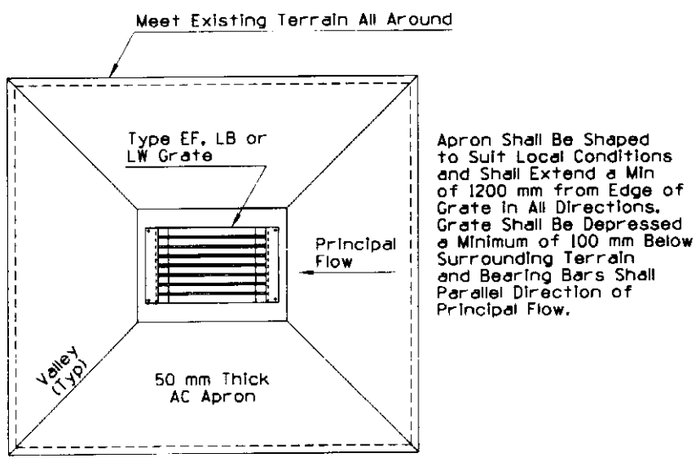

CATCH BASIN TYPE 4
OFF ROADWAY LOCATION

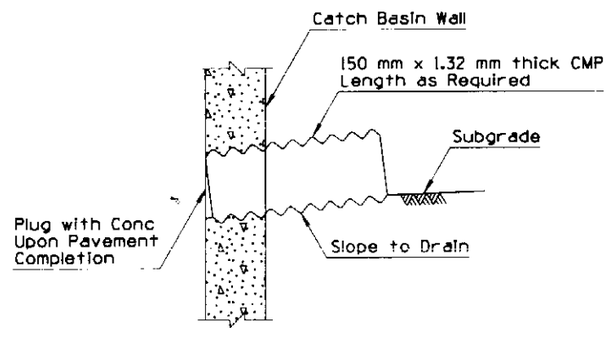

CATCH BASIN CONSTRUCTION DRAIN
DRAIN MAY BE DELETED AT OPTION OF ENGINEER

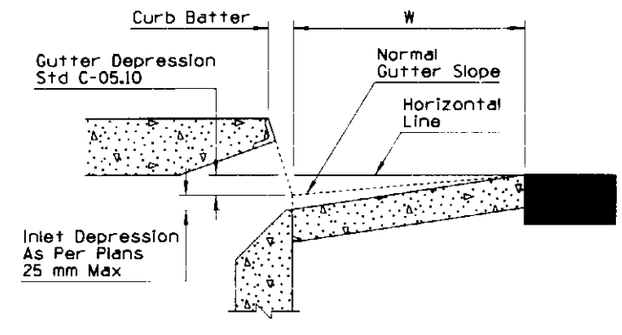

DETAIL NO. 1

DESIGN APPROVED	STATE OF ARIZONA DEPARTMENT OF TRANSPORTATION DIVISION OF HIGHWAYS STANDARD DRAWINGS	ISSUE
Terry H. Otterness		6/95
APPROVED FOR DISTRIBUTION Donald Williams	CATCH BASIN MISC. DETAILS	DRAWING NO. C-15.70

Metric

NO.	DESCRIPTION OF REVISIONS	MADE BY	DATE

Metric

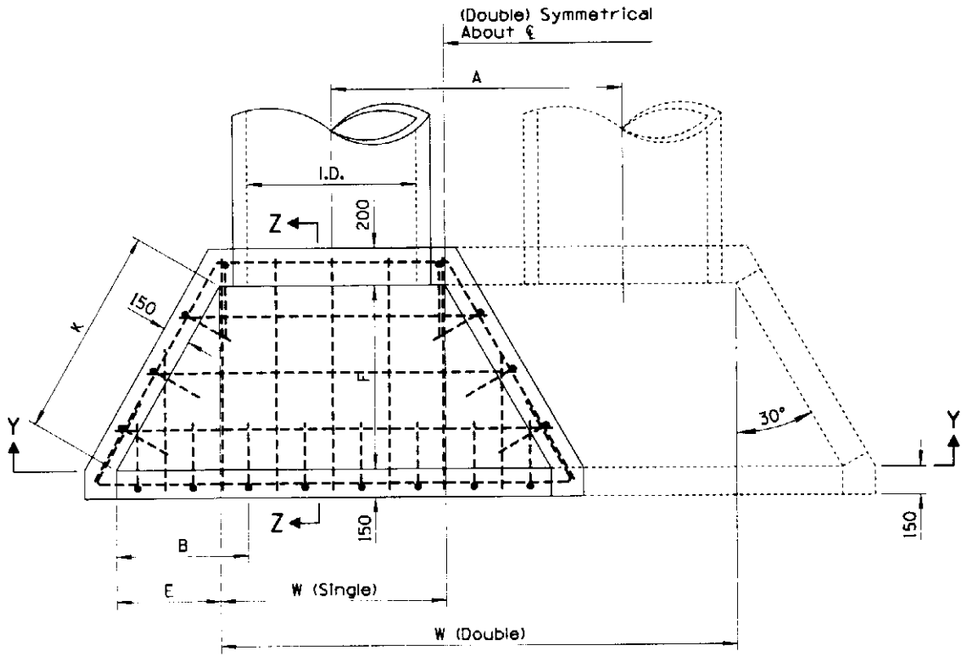

PLAN

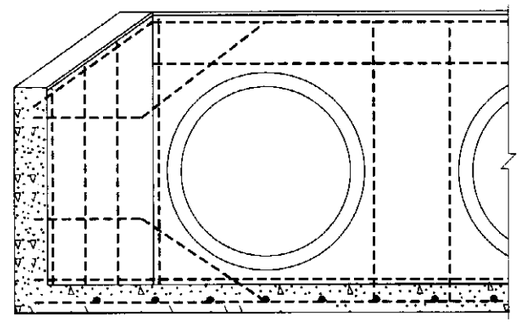

SECTION Y-Y

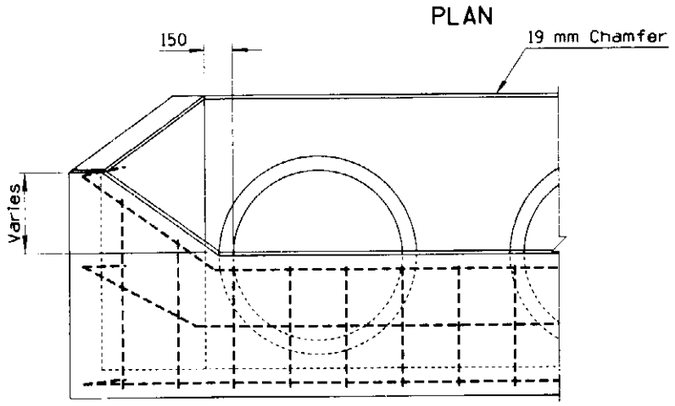

ELEVATION

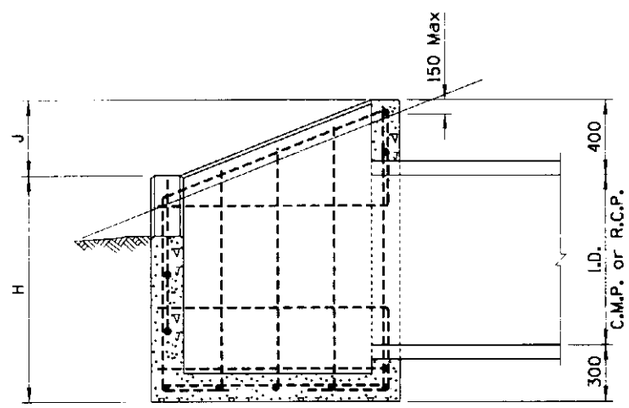

SECTION Z-Z

GENERAL NOTES

1. See also Std. C-13.10.
2. High point of headwall shall not project more than 75 mm above slope.
3. All concrete shall be Class B.
4. All reinforcing bars shall be 10M, 300 mm C to C and 75 mm clear to inside of walls and floor.

PIPE	DIMENSIONS									QUANTITIES					
										Concrete m³				Reinforcing Steel	
										Single		Double		kg	
	W														
I.D.	Single	Double	A	B	E	F	H	J	K	C.M.P.	For Concrete Pipe Deduct	C.M.P.	For Concrete Pipe Deduct	Single	Double
460	760	1570	810	380	230	400	940	230	460	0.581	0.023	0.856	0.046	34.0	48.5
610	910	1980	1070	490	340	590	1040	280	680	0.765	0.031	1.185	0.069	41.7	61.7
760	1060	2380	1320	600	460	790	1140	330	920	1.147	0.046	1.751	0.099	50.8	75.3
910	1210	2780	1570	720	570	990	1220	400	1140	1.499	0.069	2.301	0.130	65.8	97.1
1070	1370	3200	1830	840	680	1180	1320	460	1360	1.904	0.084	2.944	0.176	85.7	126.6

DESIGN APPROVED Jerry H Otterness	STATE OF ARIZONA DEPARTMENT OF TRANSPORTATION DIVISION OF HIGHWAYS STANDARD DRAWINGS	ISSUE 6/95
APPROVED FOR DISTRIBUTION Ronald A Williams	CATCH BASIN, DROP INLET	DRAWING NO. C-15.75

Metric

NO	DESCRIPTION OF REVISIONS	MADE BY	DATE
1			
2			
3			
4			

Metric

GENERAL NOTES

1. Apron shall be AC or portland cement concrete as specified on plans.
2. All concrete shall be Class B.
3. Grating shall be fabricated of structural steel.
4. Structural steel shall be in accordance with ASTM A 36/A 36M.
5. Welding shall be in accordance with Standard Welding Specifications.
6. Grating assembly shall be given one shop coat of No. 1 paint.
7. 'H' indicated on plans.

* 200 mm When Wall Height Exceeds 2.5 m.

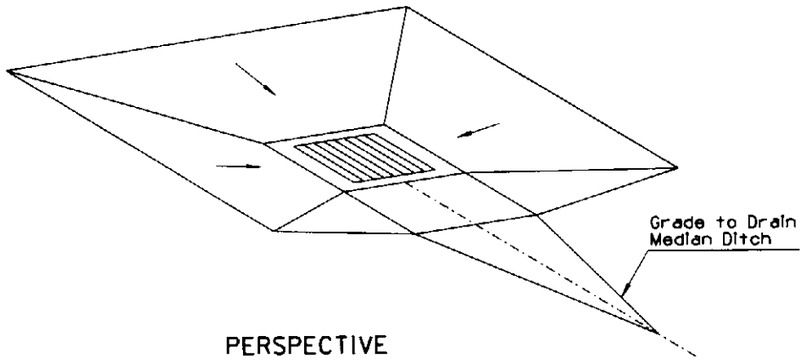

PERSPECTIVE

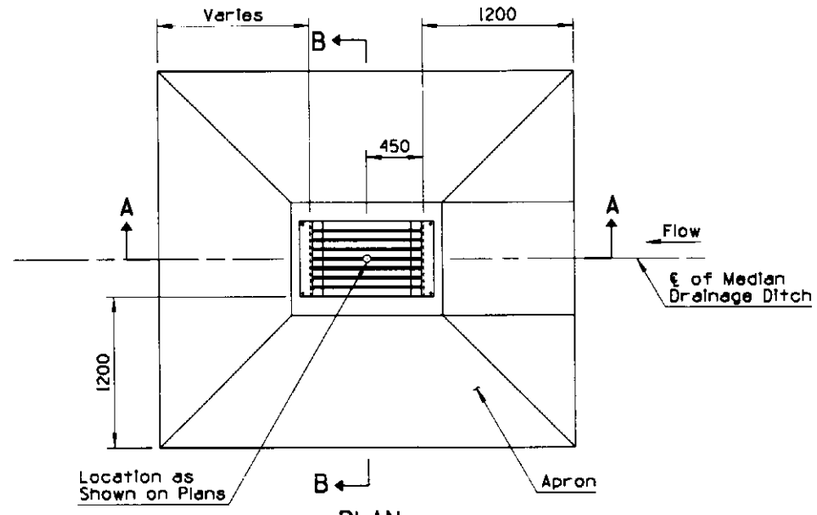

PLAN

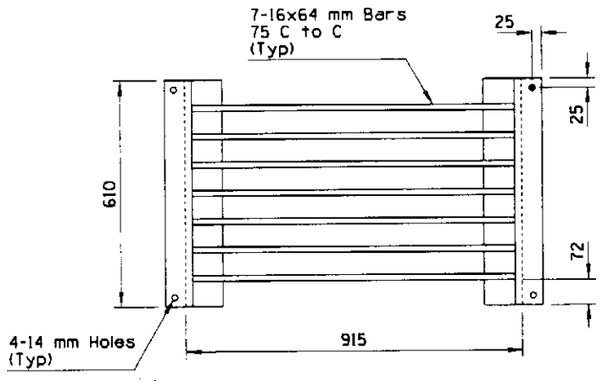

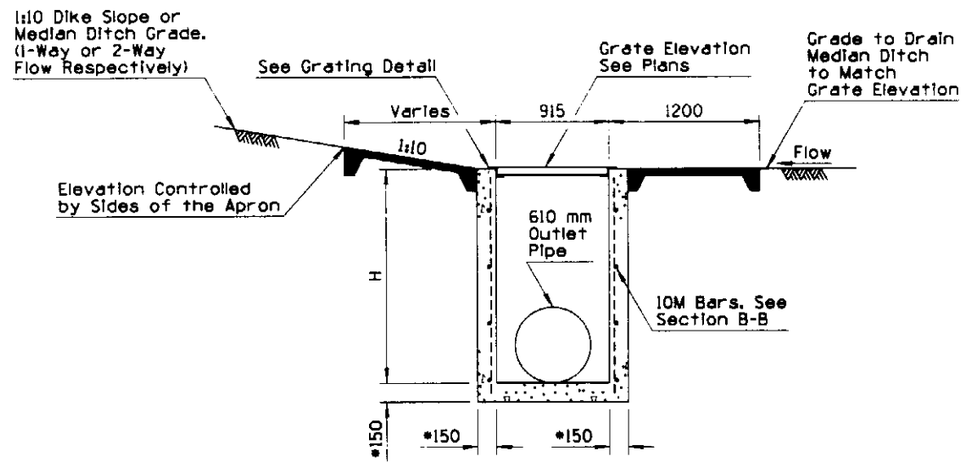

SECTION A-A

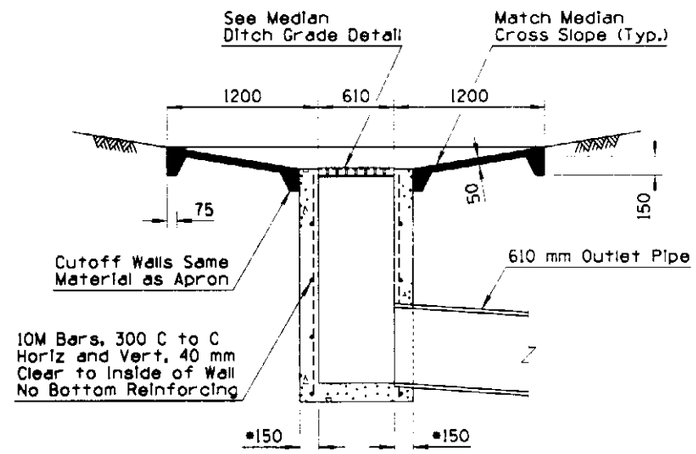

SECTION B-B

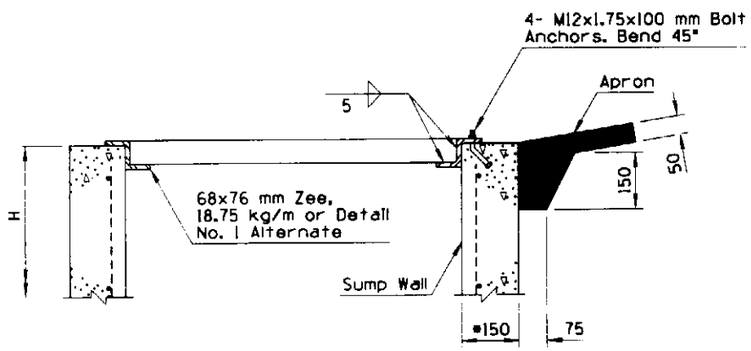

GRATING DETAIL

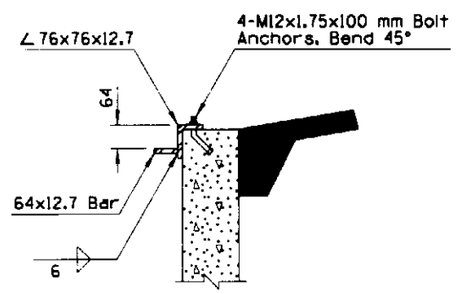

DETAIL NO. 1

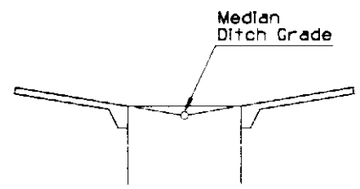

MEDIAN DITCH GRADE DETAIL

DESIGN APPROVED	STATE OF ARIZONA DEPARTMENT OF TRANSPORTATION DIVISION OF HIGHWAYS STANDARD DRAWINGS	ISSUE 6/95
APPROVED FOR DISTRIBUTION	CATCH BASIN, MEDIAN FLUSH	DRAWING NO. C-15.80

Metric

NO	DESCRIPTION OF REVISIONS	MADE BY	DATE
1			
2			
3			
4			

Metric

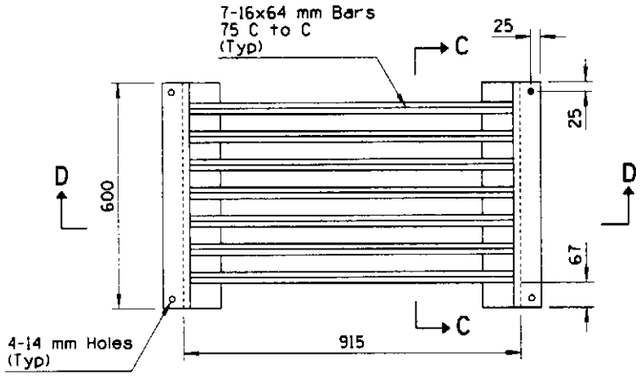

GRATING DETAIL

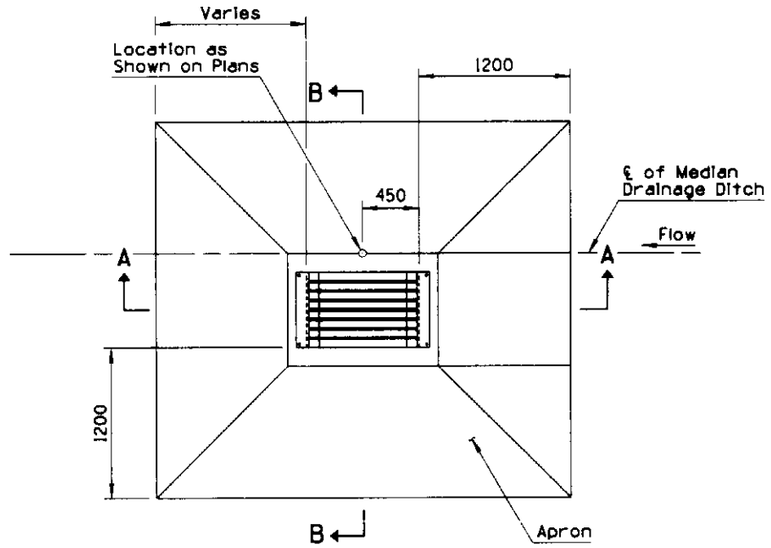

PLAN

GENERAL NOTES

1. Apron shall be AC or portland cement concrete as specified on plans.
2. All concrete shall be Class B.
3. Grating shall be fabricated of structural steel.
4. Structural steel shall be in accordance with ASTM A 36/A 36M.
5. Welding shall be in accordance with Standard Welding Specifications.
6. Grating assembly shall be given one shop coat of No. 1 paint.
7. 'H' indicated on plans.

* 200 mm When Wall Height Exceeds 2.5 m.

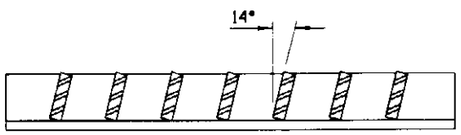

SECTION C-C

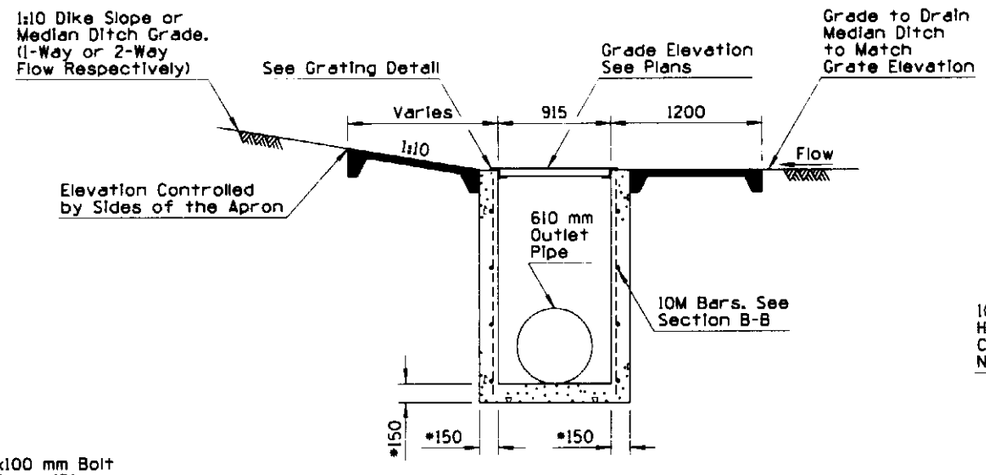

SECTION A-A

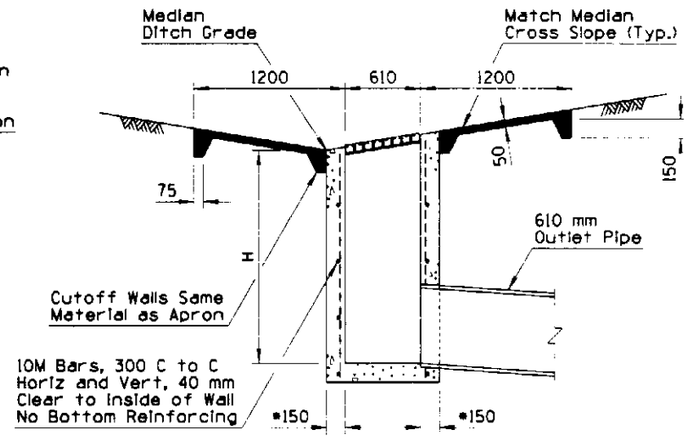

SECTION B-B

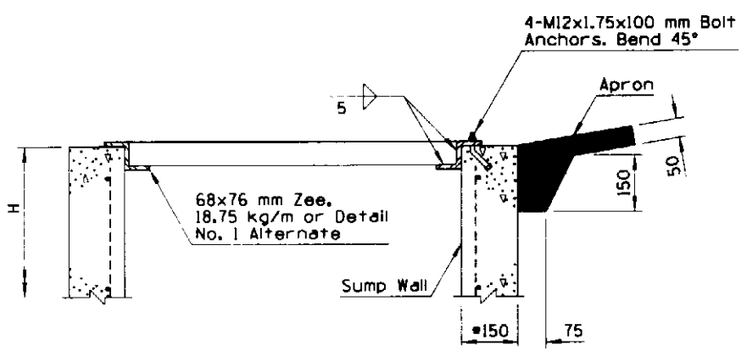

SECTION D-D

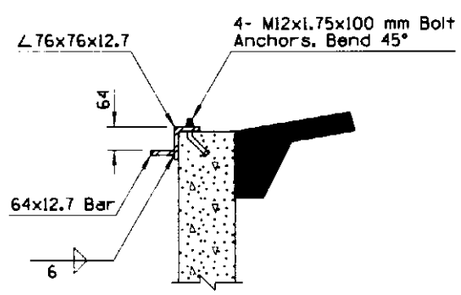

DETAIL NO. 1

DIMENSION TABLE	
Slope	A
1:6	150
1:4	230
1:3	305
1:2	455

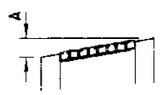

WALL HEIGHT DETAIL

DESIGN APPROVED	STATE OF ARIZONA DEPARTMENT OF TRANSPORTATION DIVISION OF HIGHWAYS STANDARD DRAWINGS	ISSUE 6/95
APPROVED FOR DISTRIBUTION	CATCH BASIN, MEDIAN SIDE SLOPE	DRAWING NO. C-15.81

Terry H. Otterness

Ronald A. Williams

Metric

NO.	DESCRIPTION OF REVISIONS	MADE BY	DATE

Metric

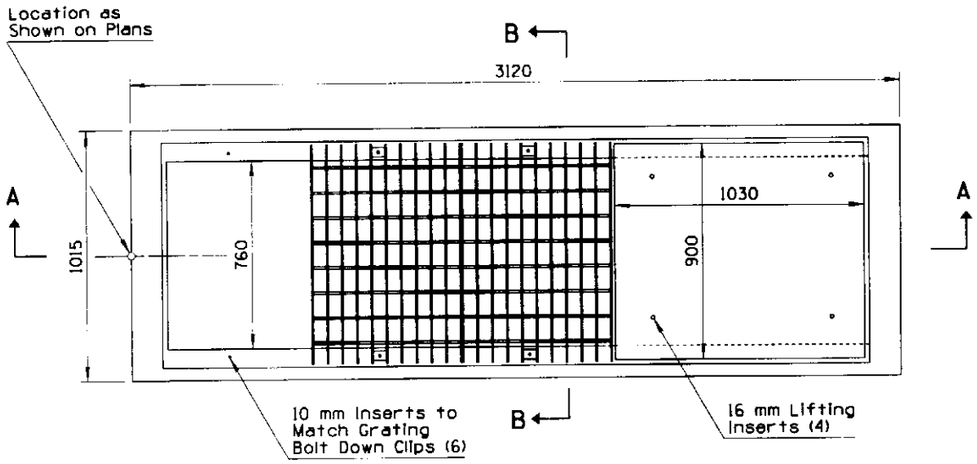

PLAN

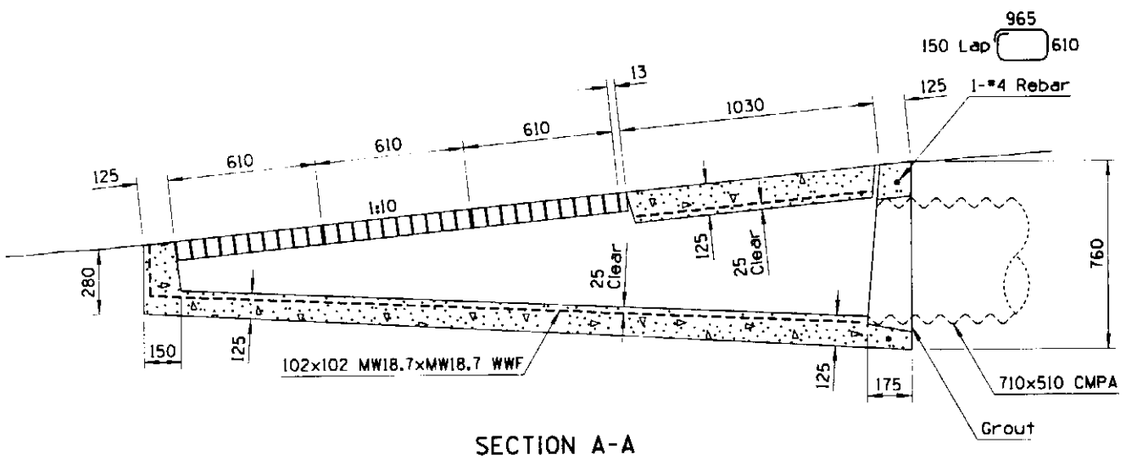

SECTION A-A

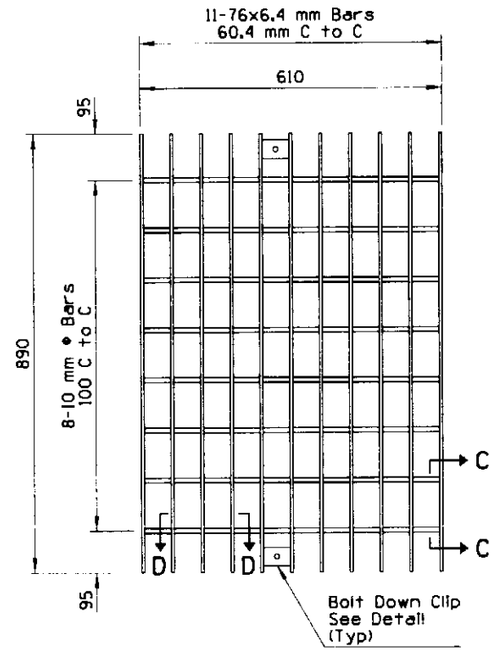

PLAN

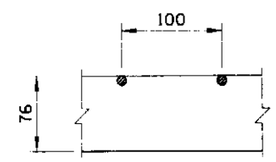

SECTION C-C

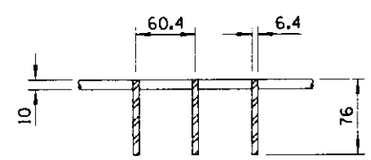

SECTION D-D

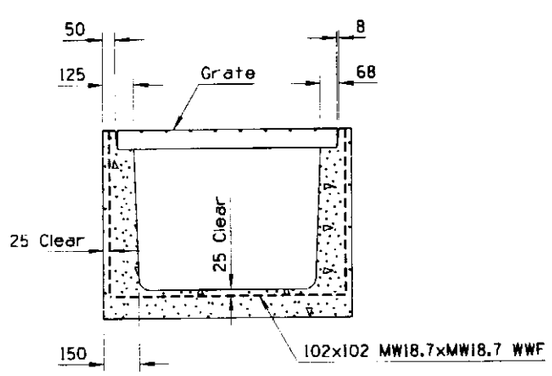

SECTION B-B

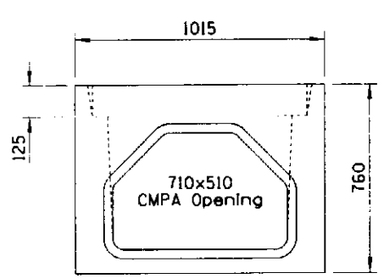

END VIEW

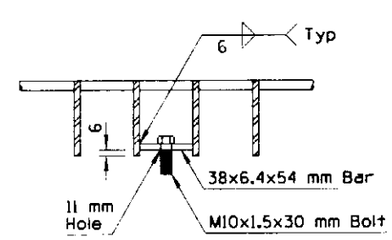

BOLT DOWN CLIP DETAIL

GENERAL NOTES

1. Concrete shall conform to the requirements for Class S Concrete. The minimum strength shall be 30 MPa.
2. Grout shall be in accordance with Standard Specifications except water content shall be such that the consistancy is proper for smooth trowling.
3. Grate cross rods shall be resistance welded, fillet welded or electro-forged to bearing bars.
4. The completed grate shall be given one shop coat of No. 1 paint.
5. Foundation soil and backfill shall be in accordance with Section 203-5 of the Standard Specifications.

DESIGN APPROVED APPROVED FOR DISTRIBUTION	STATE OF ARIZONA DEPARTMENT OF TRANSPORTATION DIVISION OF HIGHWAYS STANDARD DRAWINGS	ISSUE 6/95
	CATCH BASIN, MEDIAN DIKE PRECAST	DRAWING NO. C-15.90

Metric

NO	DESCRIPTION OF REVISIONS	MADE BY	DATE

Metric

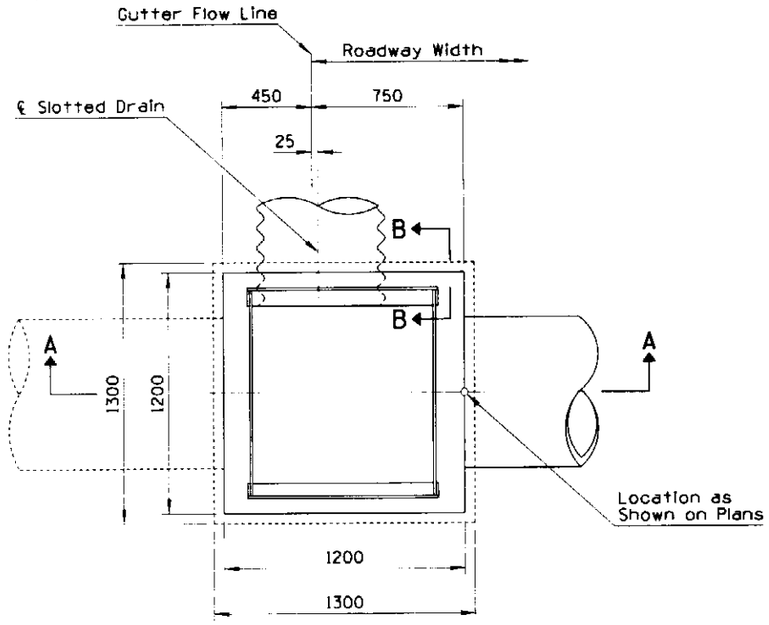

PLAN

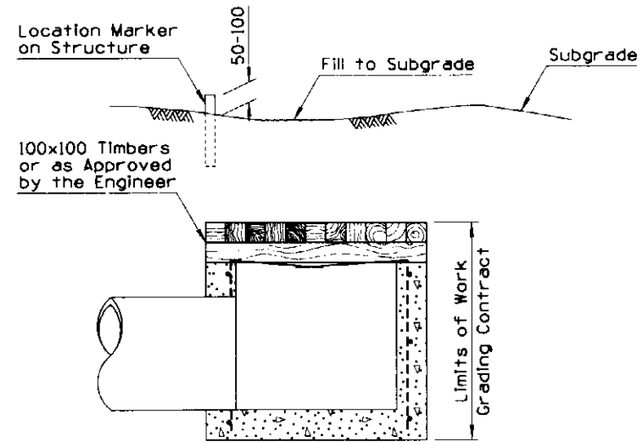

NOTE:
Bend Rebars and Cover with Two Layers of 100x100 Timbers

TIMBER CAP DETAIL

GENERAL NOTES

1. All concrete shall be Class B.
2. All reinforcing steel shall conform to 1003-1, 1003-2, Grade 300.
3. All reinforcing steel shall have 50 mm min clear cover unless otherwise noted.
4. Reinforcing steel shall be 10M rebar, 300 mm C to C horizontal & vertical in walls.
5. Pipe can be placed in any wall.
6. See Std C-13.60 and C-13.65 for more information and dimensions of slotted drains.
7. *t = 150 when H is less than 2.5 m.
   = 200 when H is greater than 2.5 m.

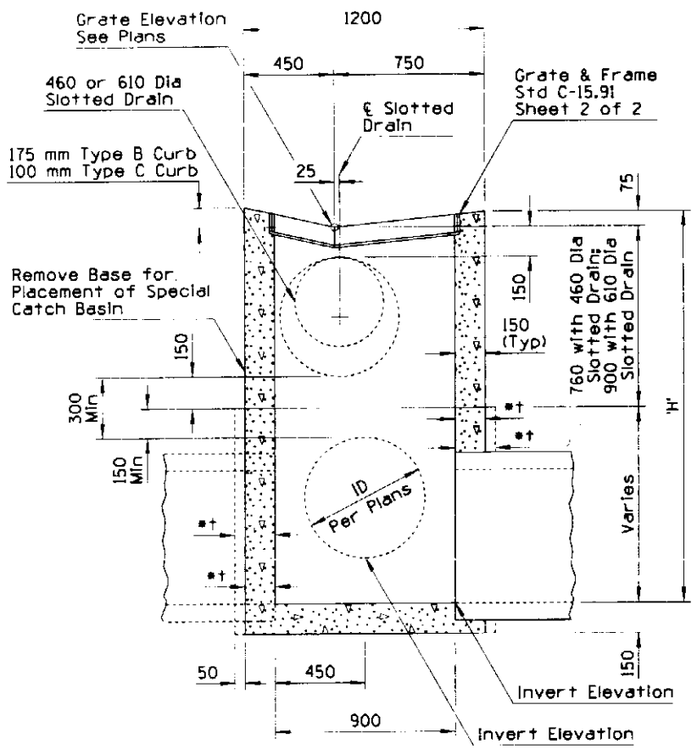

SECTION A-A

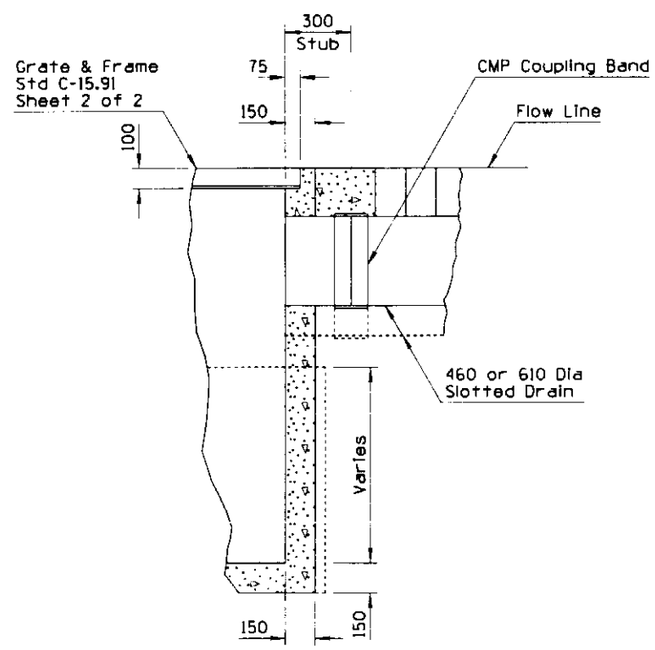

SECTION B-B

DESIGN APPROVED	STATE OF ARIZONA DEPARTMENT OF TRANSPORTATION DIVISION OF HIGHWAYS STANDARD DRAWINGS	ISSUE 6/95
APPROVED FOR DISTRIBUTION	FREEWAY CATCH BASIN DETAILS	DRAWING NO. C-15.91 Sheet 1 of 2

Metric

NO	DESCRIPTION OF REVISIONS	MADE BY	DATE
1			
2			
3			
4			

Metric

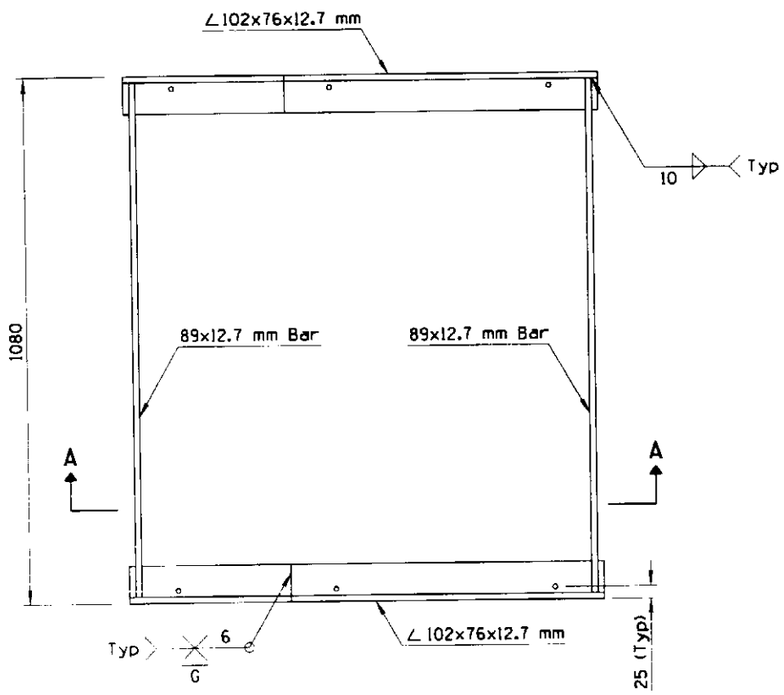

PLAN VIEW
FRAME

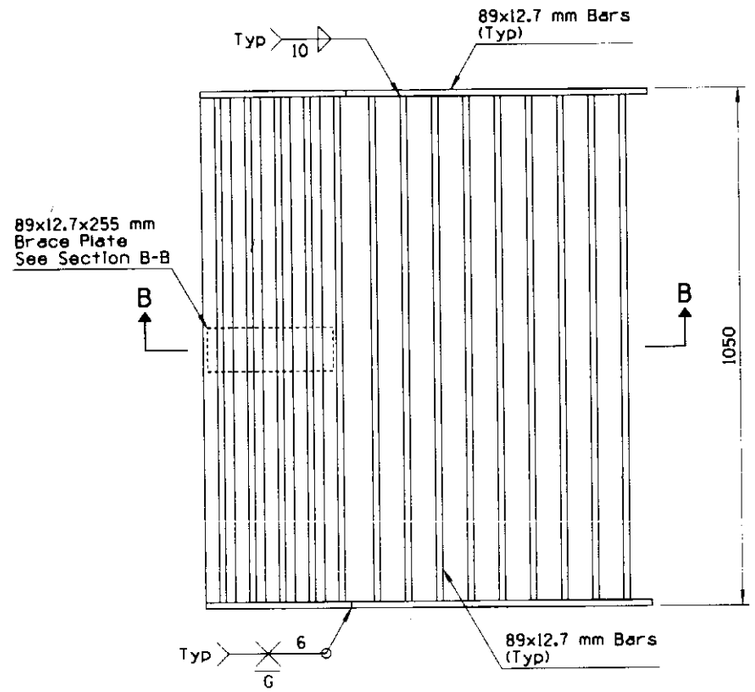

PLAN VIEW
GRATE

GENERAL NOTES

1. All structural steel shall be in accordance with ASTM A 36/A 36M.
2. Grate design is not suitable for locations subject to bicycle traffic.
3. All welding shall be in accordance with Standard Welding Specifications.
4. The completed grate assembly (frame & grate) shall be given two shop coats of No. 1 paint.
5. The installation and inspection of steel studs welded to steel acting as connection devices to the concrete shall conform to the American Welding Society's Structural Welding Code (AWS D1.1), Specifications 4.21-4.27.

GRATE AND FRAME DIMENSIONS						
			Catch Basin Frame		Catch Basin Grate	
Type	Curb Heigth	Gutter Width	A	∢	C	∢
B	150	750	354	26°-57'-40"	306	26°-57'-40"
C	75	750	338	18°-14'-22"	302	18°-14'-22"

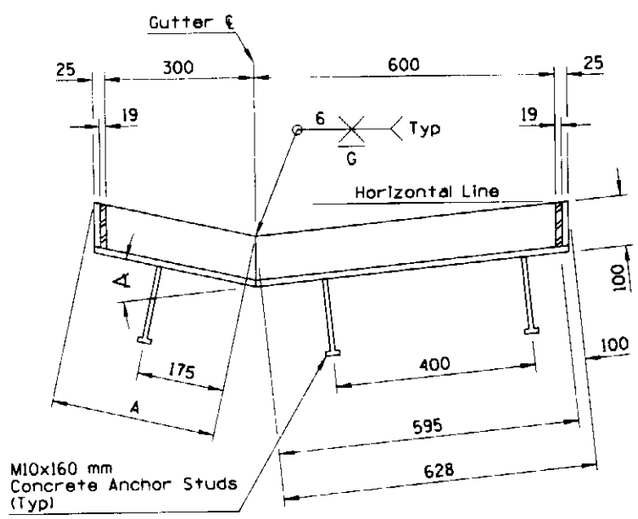

SECTION A-A

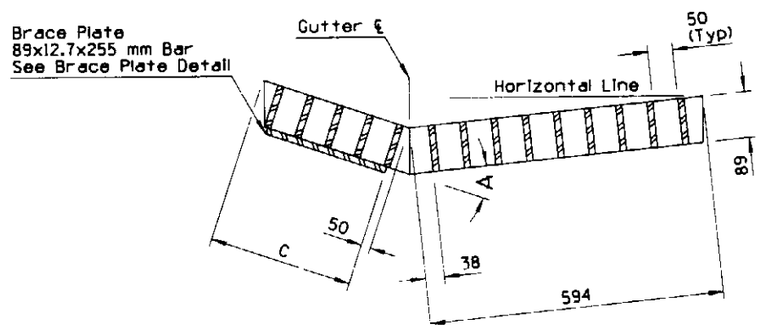

SECTION B-B

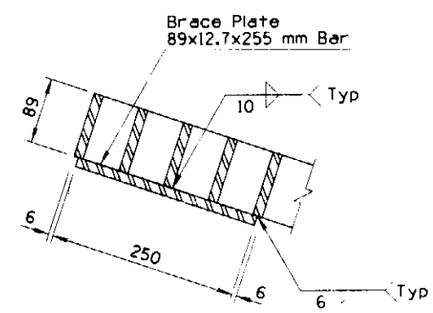

BRACE PLATE DETAIL

DESIGN APPROVED	STATE OF ARIZONA DEPARTMENT OF TRANSPORTATION DIVISION OF HIGHWAYS STANDARD DRAWINGS	ISSUE 6/95
APPROVED FOR DISTRIBUTION	FREEWAY CATCH BASIN DETAILS	DRAWING NO. C-15.91 Sheet 2 of 2

Metric

NO	DESCRIPTION OF REVISIONS	MADE BY	DATE
1			
2			
3			
4			

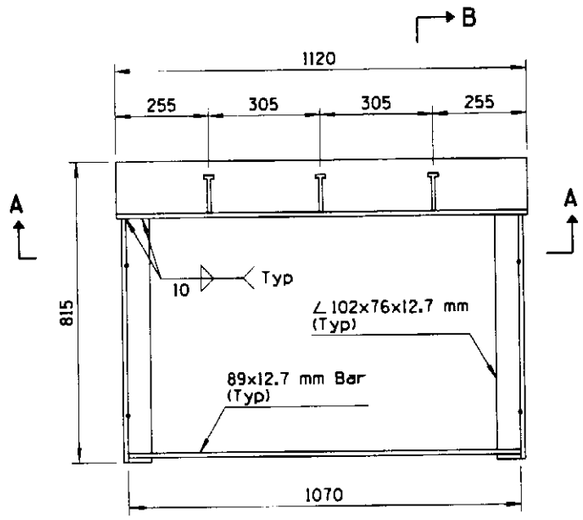

PLAN

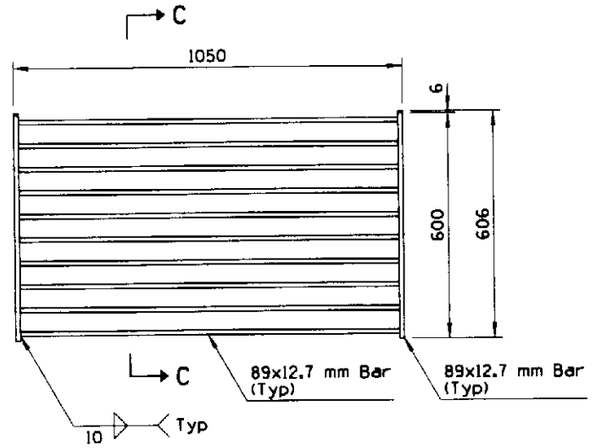

PLAN

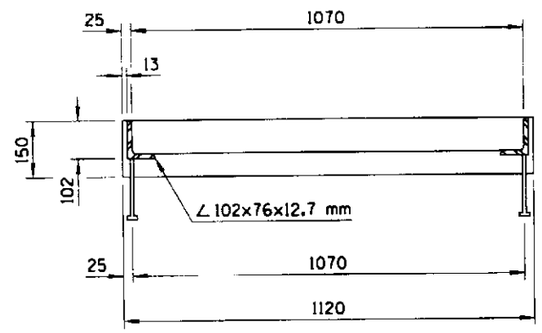

SECTION A-A

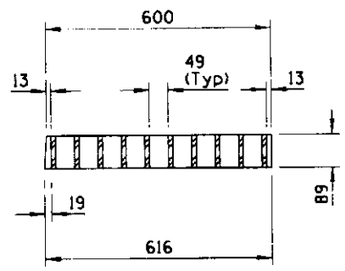

SECTION C-C

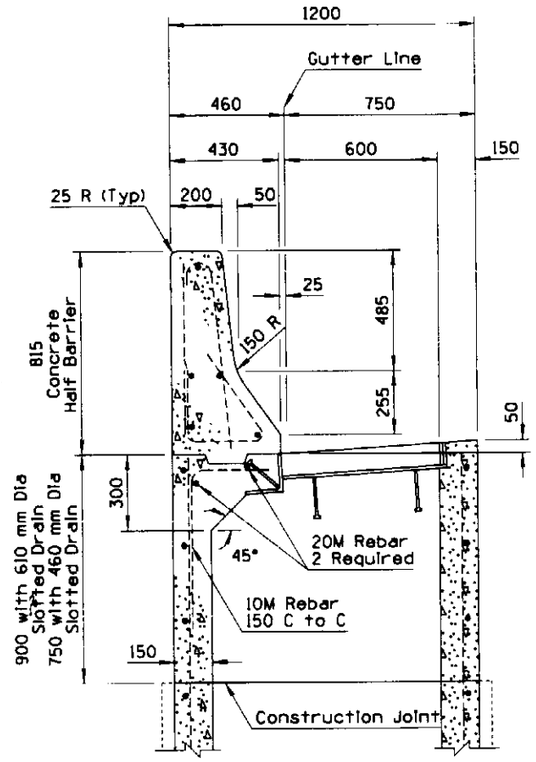

CATCH BASIN WITH HALF BARRIER

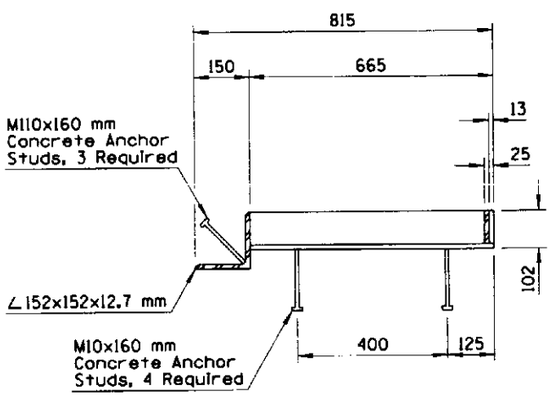

SECTION B-B

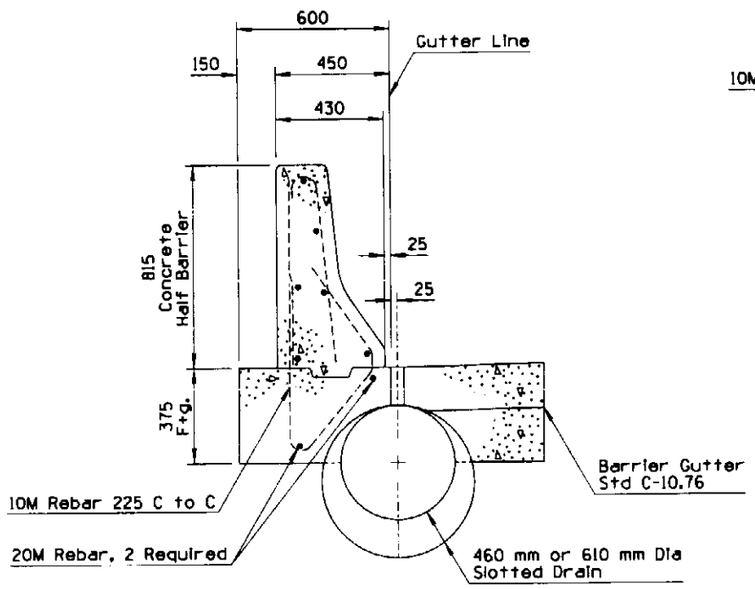

HALF BARRIER INSTALLATION
AT SLOTTED DRAIN LOCATIONS

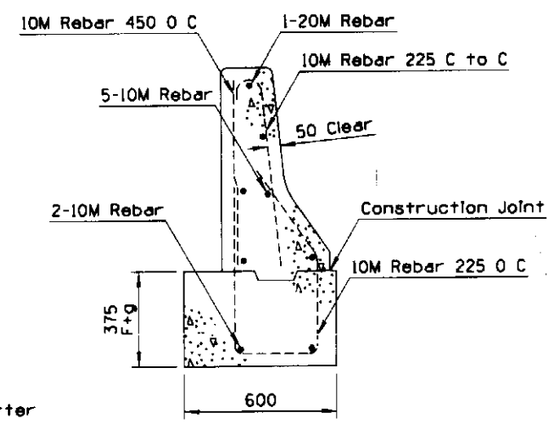

REINFORCING DETAIL

GENERAL NOTES

1. See Std C-15.91 for dimensions, sizes and details not shown for installation of catch basin and half barrier.
2. See Std C-13.60 for dimensions, sizes and details not shown for installation of slotted drain.
3. Unless otherwise noted, reinforcement steel in half barrier for installation with catch basin and slotted drain, shall conform to sizes and number specified.
4. The installation and inspection of steel studs welded to steel acting as a connection device to the concrete shall conform to AWS D1.1 and specifications 4.21 - 4.27.
5. Where applicable, see Std C-10.60 for weep hole placement.
6. See Std C-10.65 for additional general notes.
7. Grate design is not suitable for locations subject to bicycle traffic.

DESIGN APPROVED APPROVED FOR DISTRIBUTION	STATE OF ARIZONA DEPARTMENT OF TRANSPORTATION DIVISION OF HIGHWAYS STANDARD DRAWINGS	ISSUE 6/95
	CATCH BASIN WITH HALF BARRIER	DRAWING NO. C-15.92

NO	DESCRIPTION OF REVISIONS	MADE BY	DATE
1			
2			
3			
4			

Metric

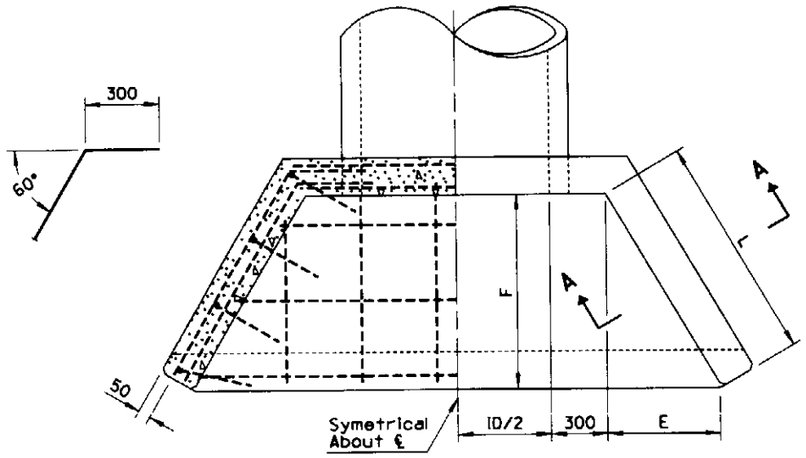

PLAN

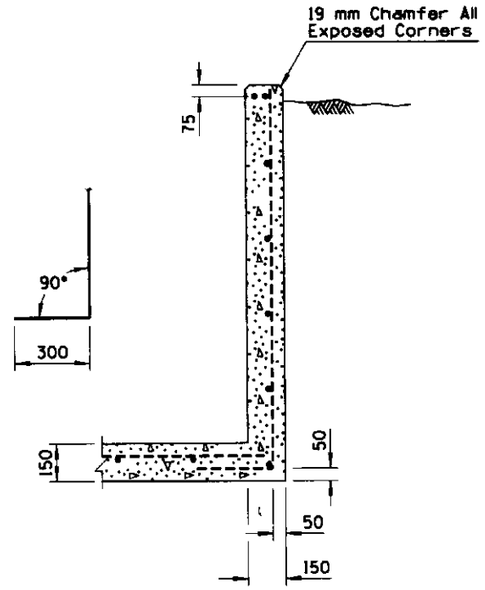

SECTION A-A

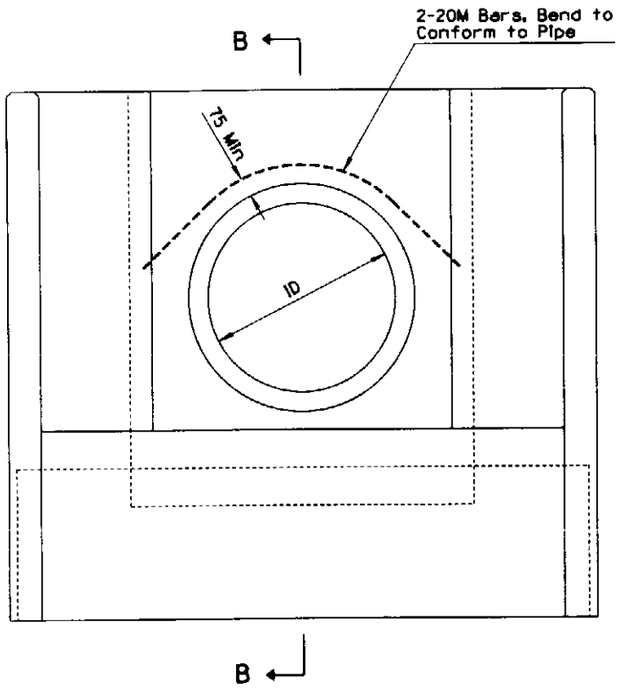

ELEVATION

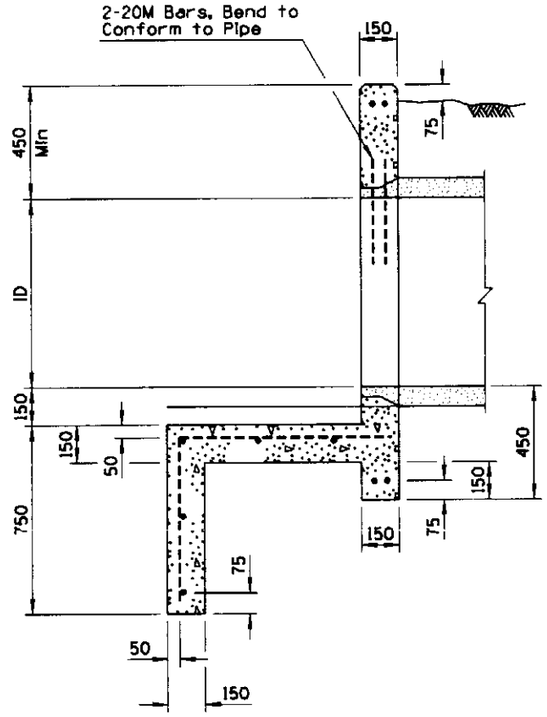

SECTION B-B

GENERAL NOTES

1. All concrete shall be Class B.
2. All reinforcing bars shall be 10M except two 20M bars over pipe. Bar spacing approximately 300 mm center to center unless otherwise noted.
3. 30° wing wall flare shown; 45° normally desirable. See Hydraulics and Utility and Railroad Engineering Sections.

PIPE	DIMENSIONS			QUANTITIES		
				m^3 Concrete		
ID	L	E	F (Approx)	CMP	RCP	Reinf Steel kg
460	600	300	520	0.742	0.734	30
610	600	300	520	0.849	0.818	35
760	900	450	780	1.147	1.100	49
910	1200	600	1040	1.590	1.537	68
1070	1500	750	1300	2.072	2.011	93
1220	1800	900	1560	2.592	2.523	122
1370	2100	1050	1820	3.165	3.074	152
1520	2400	1200	2080	3.792	3.670	186

DESIGN APPROVED	STATE OF ARIZONA DEPARTMENT OF TRANSPORTATION DIVISION OF HIGHWAYS STANDARD DRAWINGS	ISSUE 6/95
APPROVED FOR DISTRIBUTION	IRRIGATION HEADWALLS 460 TO 1520 mm DIAMETER PIPES	DRAWING NO. C-16.10

Metric

NO	DESCRIPTION OF REVISIONS	MADE BY	DATE

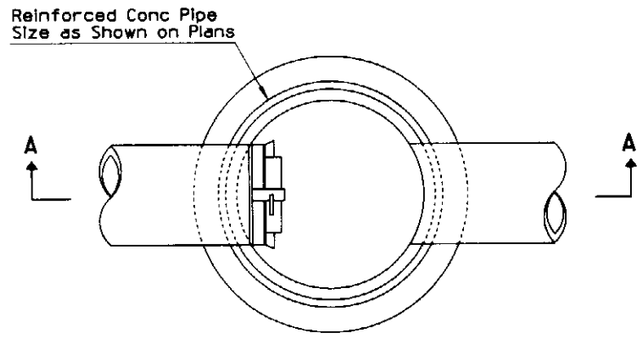

PLAN

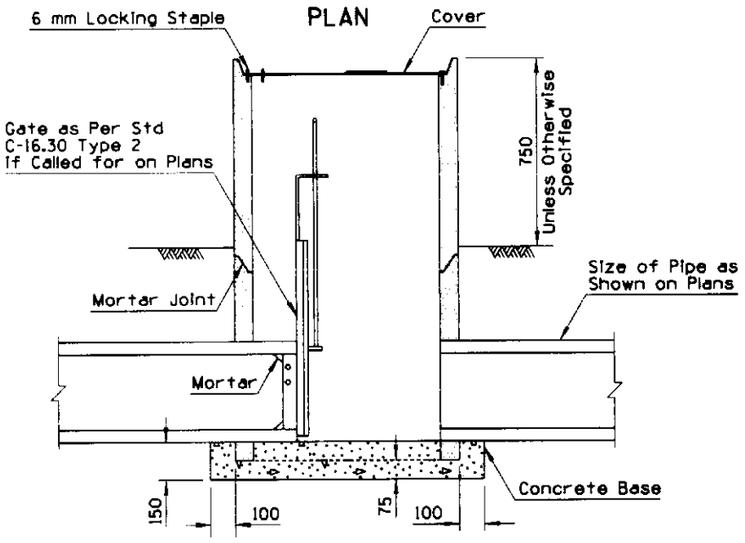

SECTION A-A

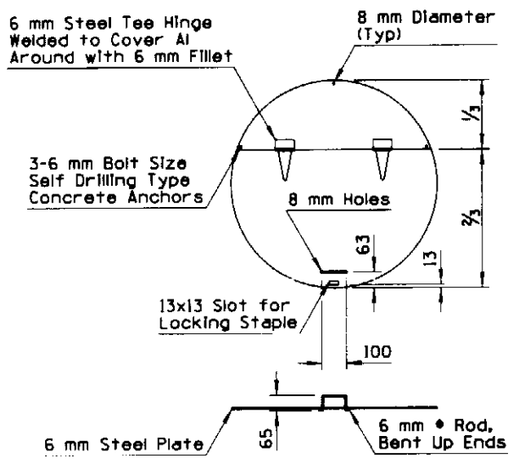

COVER
IRRIGATION STANDPIPE NO. 1

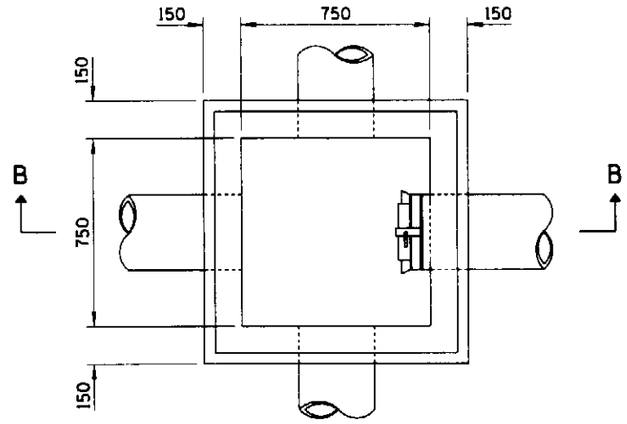

PLAN

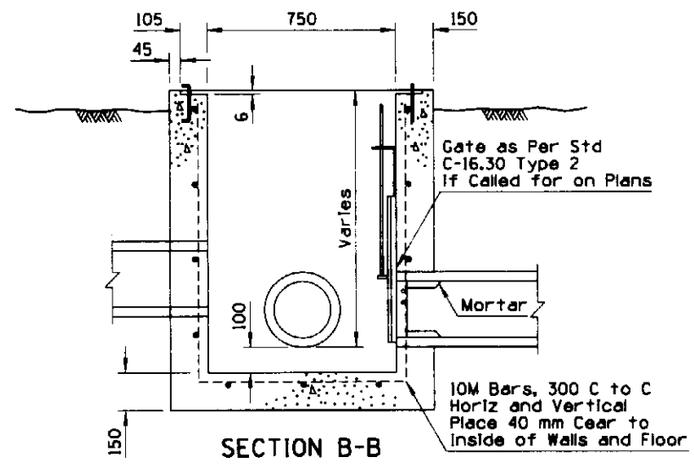

SECTION B-B

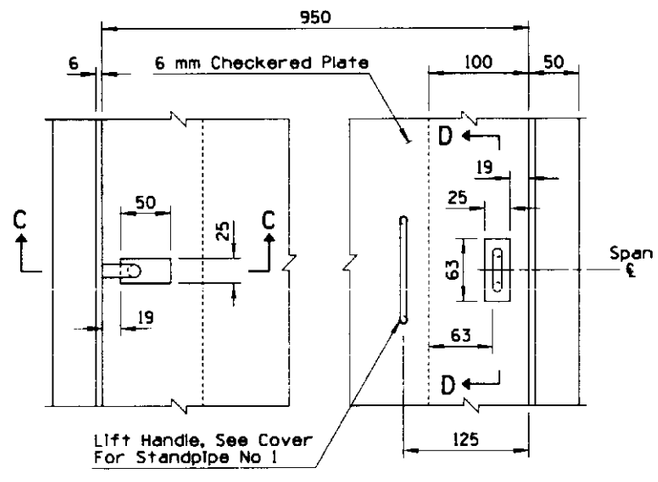

LOCKING COVER
IRRIGATION STANDPIPE NO. 2

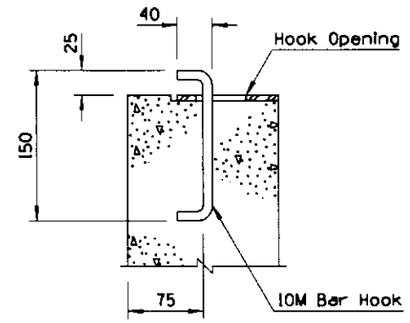

SECTION C-C

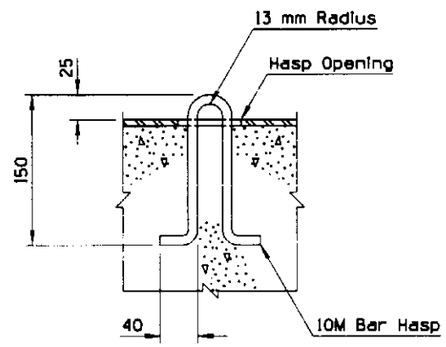

SECTION D-D

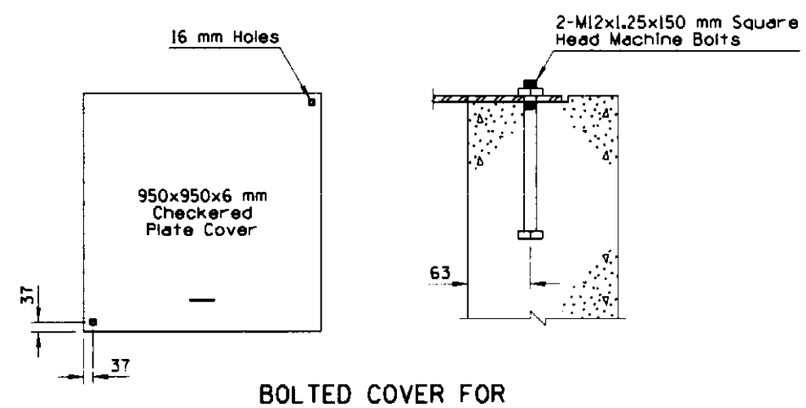

BOLTED COVER FOR
STANDPIPE NO. 2

GENERAL NOTES

1. All concrete shall be Class B.
2. Structural steel shall be in acordance with ASTM A 36/A 36M.
3. All cover steel and exposed appurtenances shall be given one shop coat of No. 1 paint.
4. Plans shall specify locked or bolted cover for standpipe No. 2.
5. For specific details of a flush pavement or sidewalk installation, see Utility and Railroad Engineering Section.

DESIGN APPROVED	STATE OF ARIZONA DEPARTMENT OF TRANSPORTATION DIVISION OF HIGHWAYS STANDARD DRAWINGS	ISSUE 6/95
APPROVED FOR DISTRIBUTION	IRRIGATION STANDPIPES	DRAWING NO. C-16.20

NO	DESCRIPTION OF REVISIONS	MADE BY	DATE
1			
2			
3			
4			

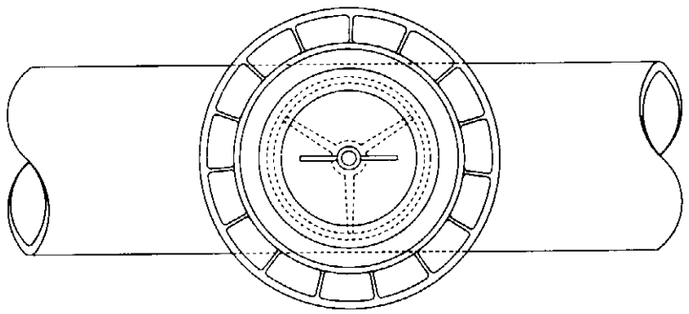

PLAN

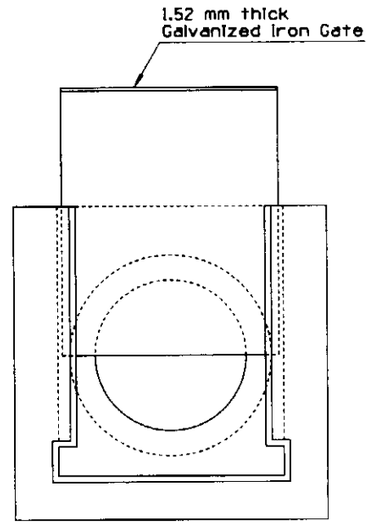

ELEVATION

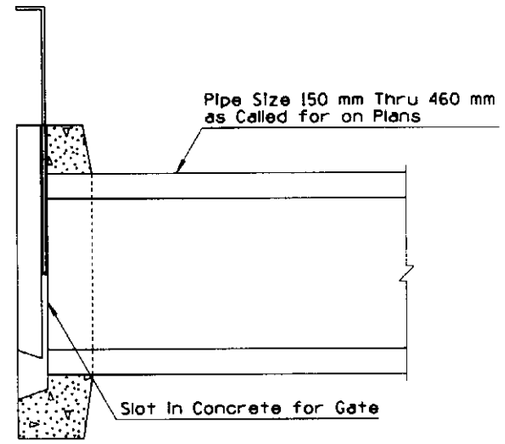

SECTION

PRECAST IRRIGATION GATE
For Open Ditch Installation
TYPE 1

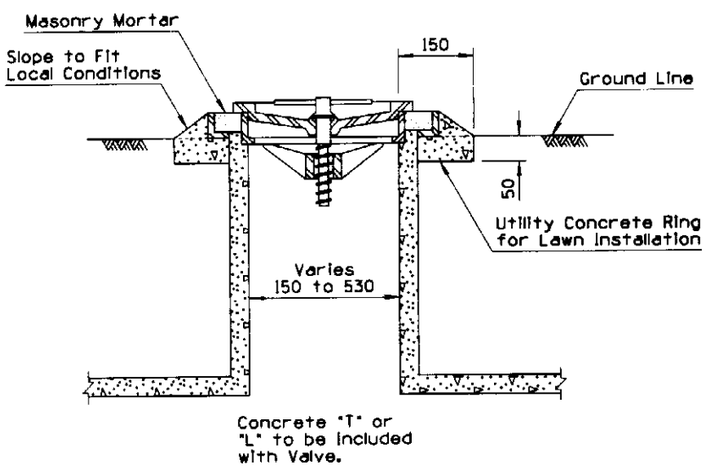

Irrigation Valve Number of Valve Shall Correspond to the Size of Pipe. No 150 to No 530.

PART SECTION
FLUSH IRRIGATION VALVE

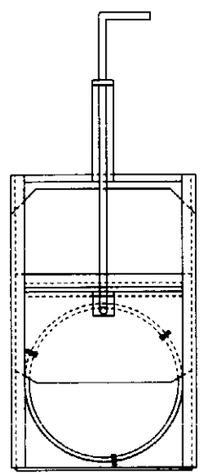

ELEVATION

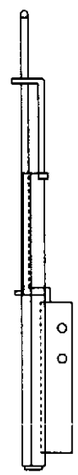

SECTION

IRRIGATION GATE
For Standpipe Installation
TYPE 2

TYPE 2 IRRIGATION GATE

For pipes 150 mm through 610 mm. Gate and frame shall be galvanized iron. Type shown is for concrete pipe. For CMP, external steel adjustable band shall be used in place of internal steel ring.

DESIGN APPROVED Larry H. Otterness	STATE OF ARIZONA DEPARTMENT OF TRANSPORTATION DIVISION OF HIGHWAYS STANDARD DRAWINGS	ISSUE 6/95
APPROVED FOR DISTRIBUTION Ronald Williams	IRRIGATION VALVE AND GATE	DRAWING NO. C-16.30

NO	DESCRIPTION OF REVISIONS	MADE BY	DATE
1			
2			
3			
4			

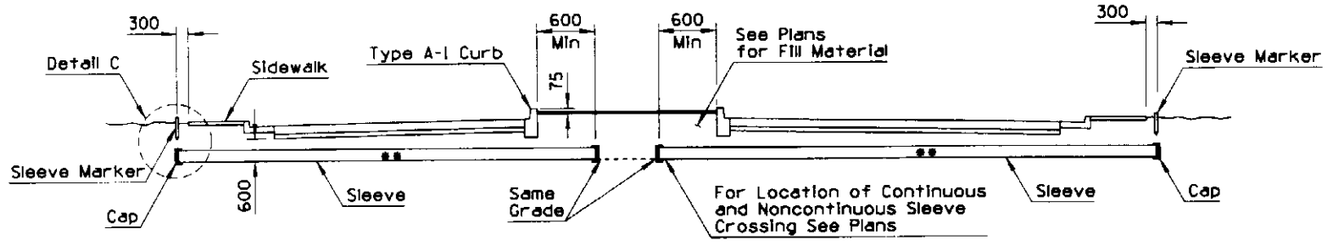

SLEEVE UNDER CROSSROAD

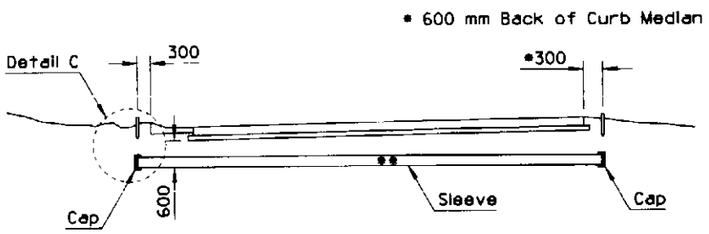

SLEEVE UNDER MAINLINE

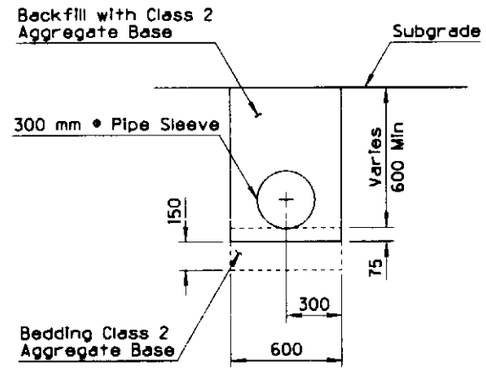

TYPICAL INSTALLATION

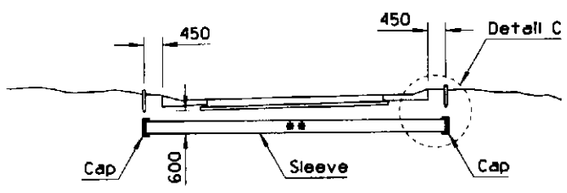

SLEEVE UNDER RAMP

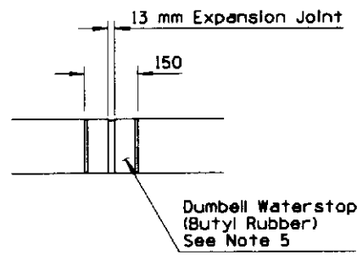

DUMBELL WATERSTOP

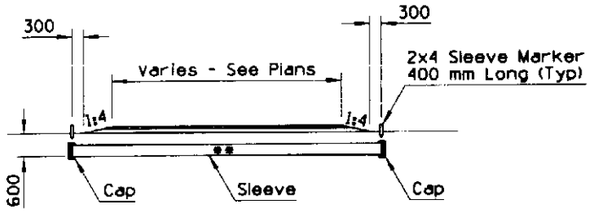

SLEEVE UNDER DRIVEWAYS AND PARKING AREAS

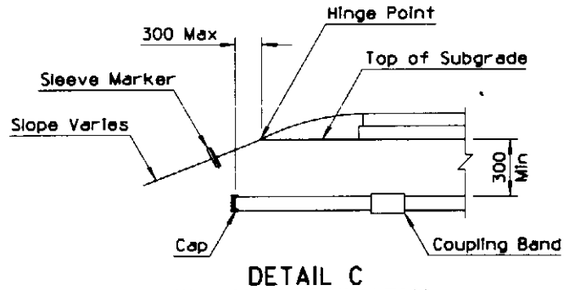

DETAIL C
SLEEVE TERMINATION
AT ELEVATED ROADWAY

GENERAL NOTES

1. Irrigation sleeves shall be installed in a trench condition. See Std C-13.15 and Std C-7.06.
2. Bedding and backfill material shall be Class 2 Aggregate Base.
3. Pipe installation shall conform to Section 501 of Standard Specifications.
4. The Contractor shall imprint a 100 mm± high letter "S" on the face of all curbs at sleeve locations. The width of the letter shall be 13 mm and shall penetrate the concrete surface 13 mm.
5. For non-continuous sleeves under crossroads, Std C-5.10 Type "A-1" curb shall be required where median is irrigated. See plans for locations. Dumbell waterstop shall be at all expansion joints.
6. Materials used for caps or plugs shall be as recommended by the pipe supplier and approved by the Engineer.

** Generally, sleeves shall be installed parallel to the roadway subgrade. Slope may vary in superelevated sections. Minimum slope nominal to drain.

DESIGN APPROVED Henry H. Ottemann	STATE OF ARIZONA DEPARTMENT OF TRANSPORTATION DIVISION OF HIGHWAYS STANDARD DRAWINGS	ISSUE 6/95
APPROVED FOR DISTRIBUTION Ronald Williams	IRRIGATION SLEEVES	DRAWING NO. C-16.40

NO	DESCRIPTION OF REVISIONS	MADE BY	DATE
1			
2			
3			
4			

Metric

GENERAL NOTES

1. Rock shall be sound and durable, of rounded or angular shape and with a nominal diameter of 200 mm minimum and 300 mm maximum. Flat or needle shapes are not acceptable.
2. Wire mesh splice shall have a 150 mm minimum lap vertically and horizontally.

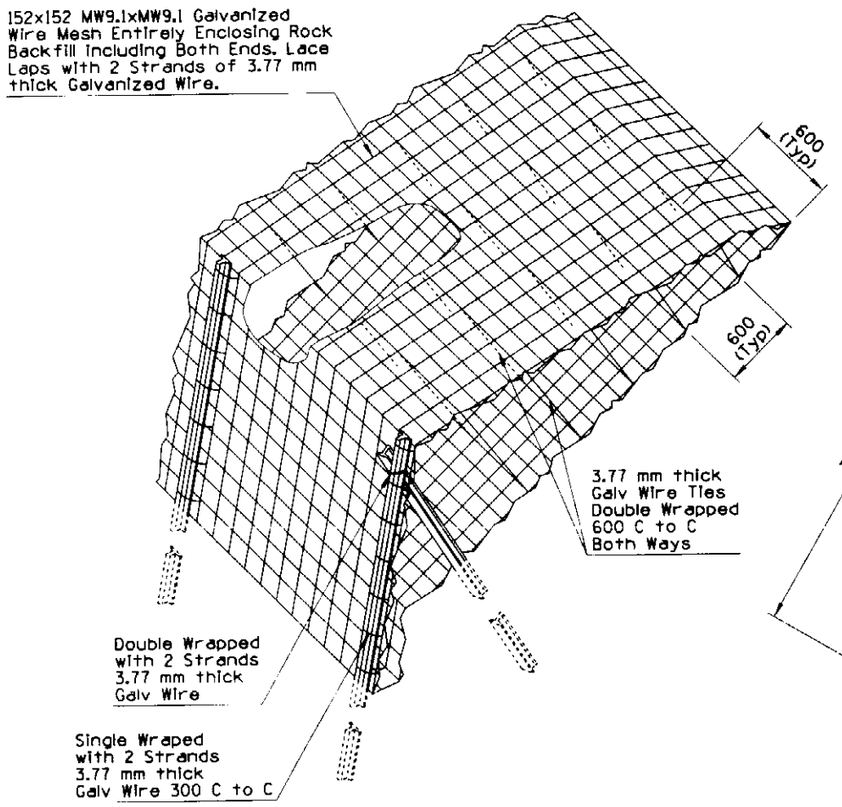

PERSPECTIVE

Drawn for types 1 and 2, Type 3 Similar

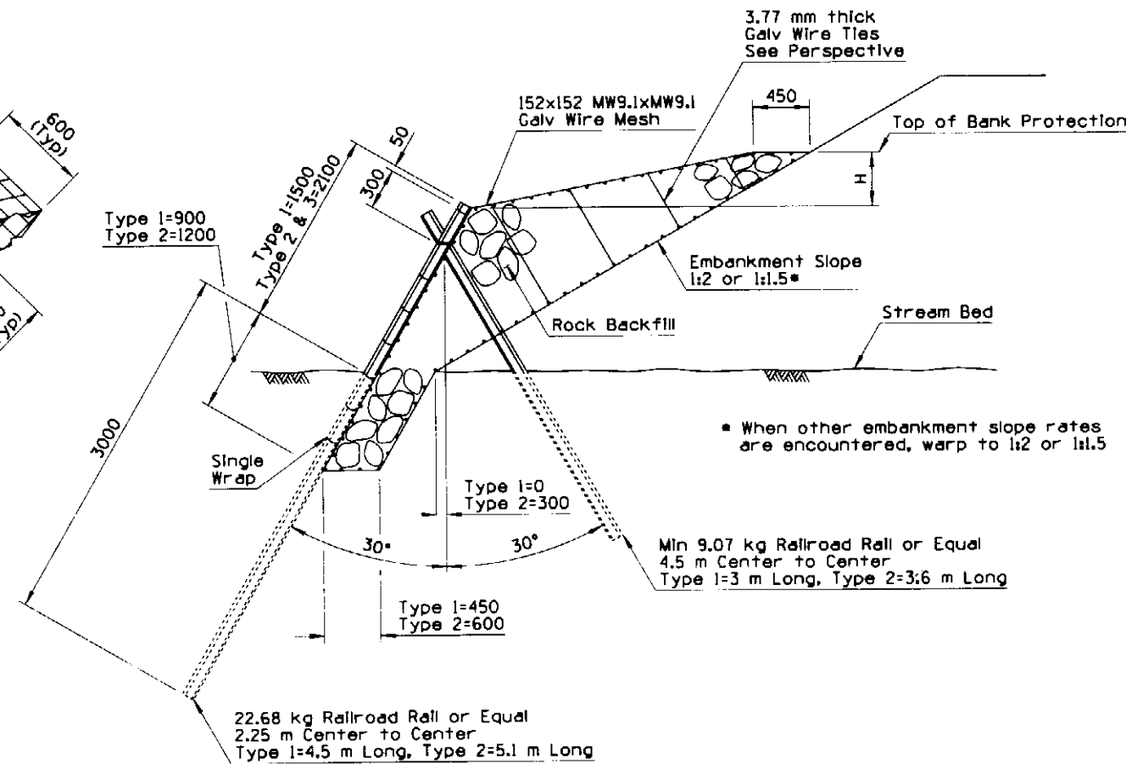

* When other embankment slope rates are encountered, warp to 1:2 or 1:1.5

TYPE 1 AND 2 BANK PROTECTION

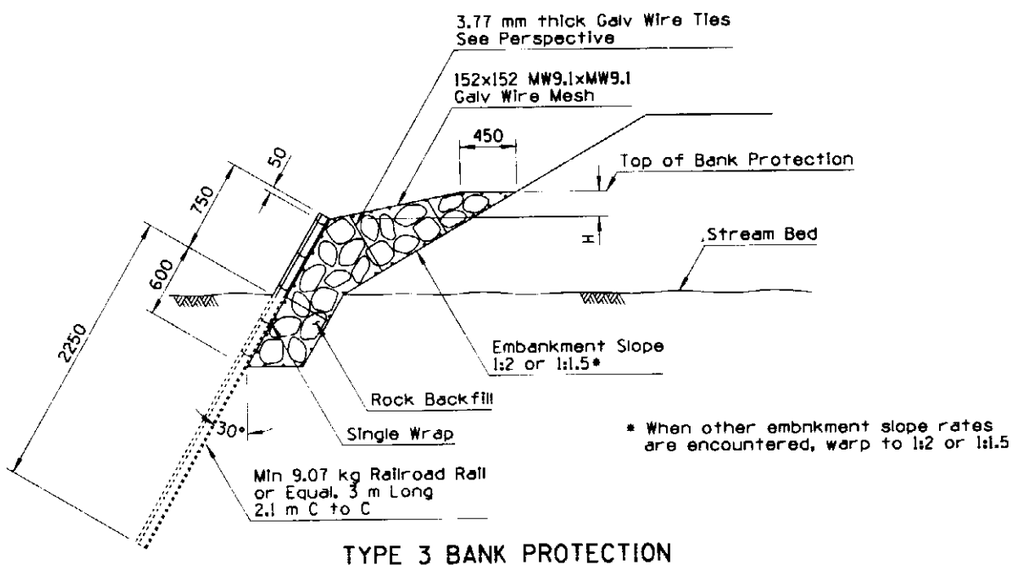

* When other embnkment slope rates are encountered, warp to 1:2 or 1:1.5

TYPE 3 BANK PROTECTION

TYPE	H	TOP OF BANK PROTECTION ABOVE THE STREAM BED
3	0 to 600	600 to 1200
1	0 to 900	1200 to 2100
2	0 to 1800	1800 to 3600

DESIGN APPROVED Henry H. Otterness	STATE OF ARIZONA DEPARTMENT OF TRANSPORTATION DIVISION OF HIGHWAYS STANDARD DRAWINGS	ISSUE 6/95
APPROVED FOR DISTRIBUTION Ronald Williams	BANK PROTECTION, RAIL TYPES 1, 2, 3	DRAWING NO. C-17.10

Metric

NO.	DESCRIPTION OF REVISIONS	MADE BY	DATE
1			
2			
3			
4			

Metric

GENERAL NOTES

1. Rock shall be sound and durable, of rounded or angular shape and with a nominal diameter of 200 mm minimum and 525 mm maximum. Flat or needle shapes are not acceptable. Rock shall be comprised of 50% min 200 to 300 mm and 5% max 450 to 525 mm.
2. Wire mesh splice shall have a 150 mm minimum lap vertically and horizontally.

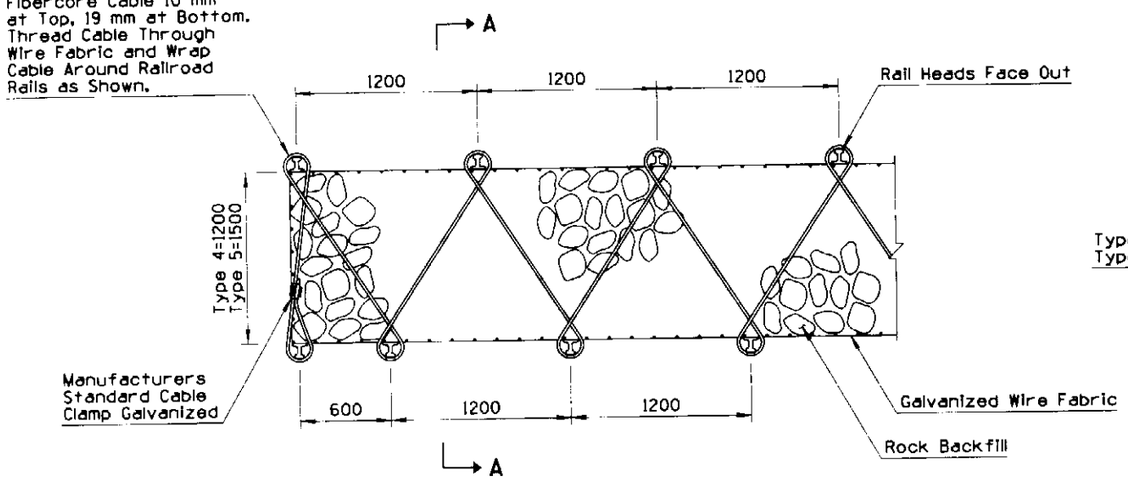

PLAN

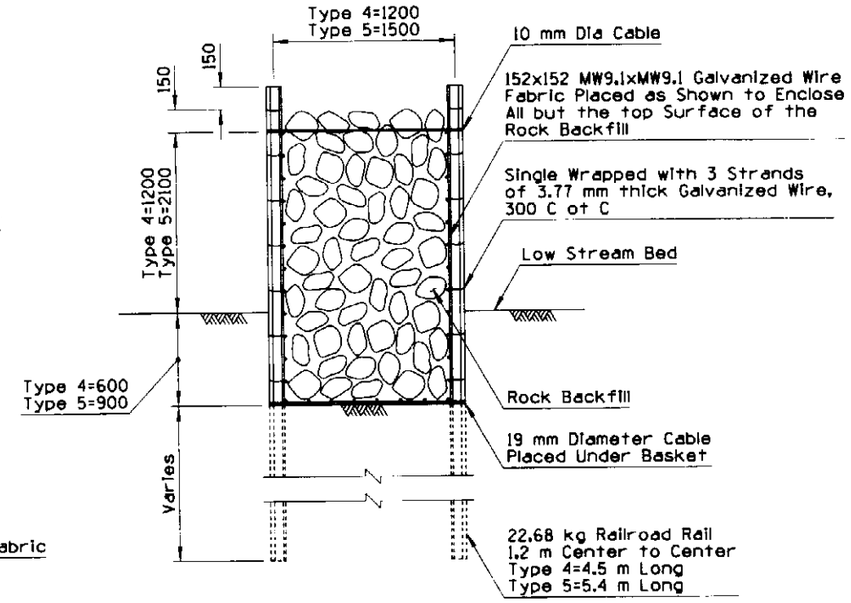

SECTION A-A

TYPE 4 AND 5 BANK PROTECTION

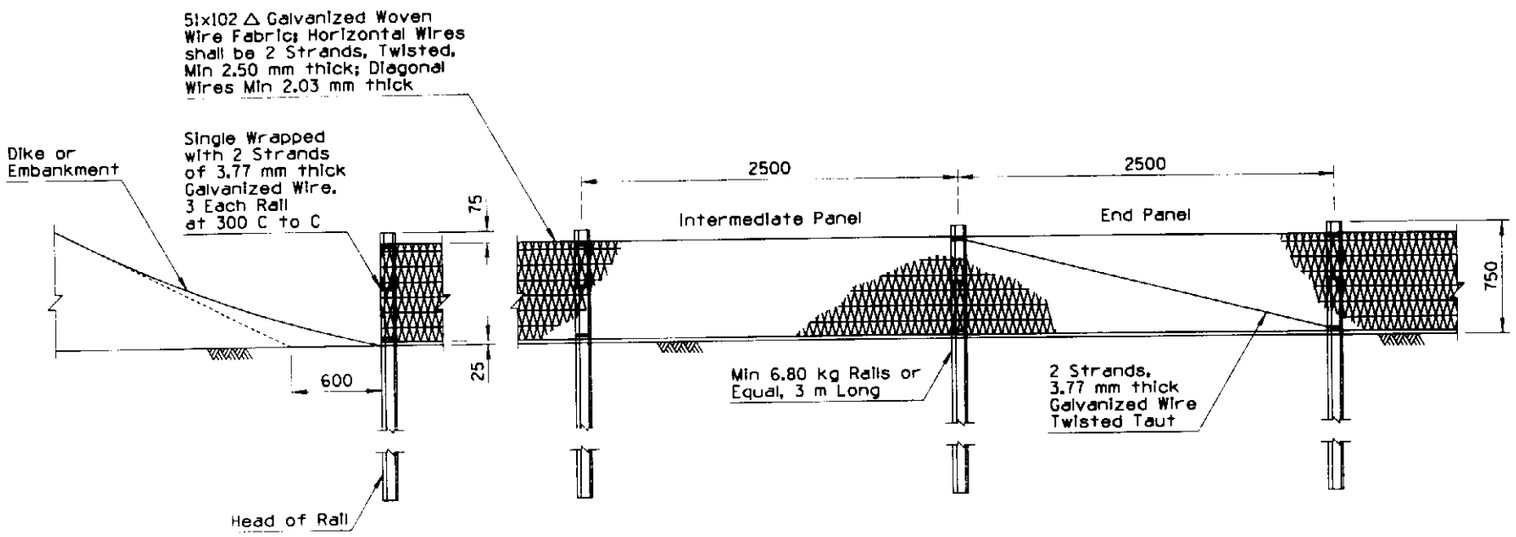

TYPE 6 BANK PROTECTION

DESIGN APPROVED	STATE OF ARIZONA DEPARTMENT OF TRANSPORTATION DIVISION OF HIGHWAYS STANDARD DRAWINGS	ISSUE 6/95
APPROVED FOR DISTRIBUTION	BANK PROTECTION, RAIL TYPES 4,5 AND 6	DRAWING NO. C-17.20

Metric

NO	DESCRIPTION OF REVISIONS	MADE BY	DATE
1			
2			
3			
4			

Metric

HALF PLAN
BRICK CONCRETE

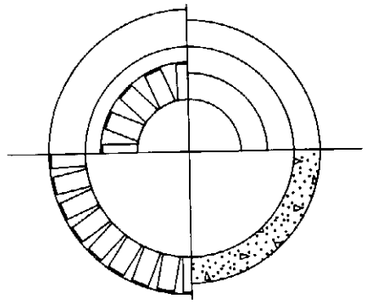

SECTION A-A

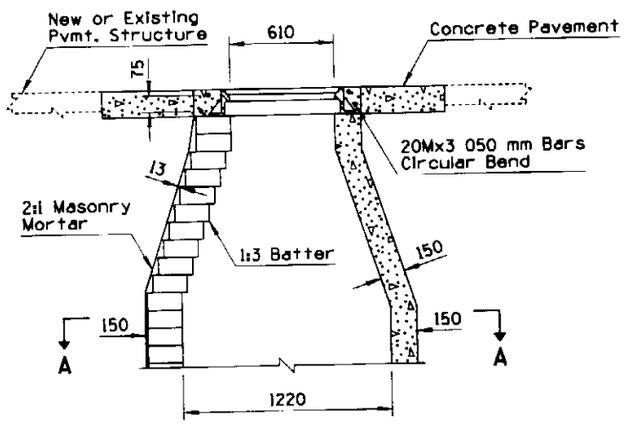

SECTION
BRICK MANHOLE NO. 1 CONCRETE MANHOLE NO. 2

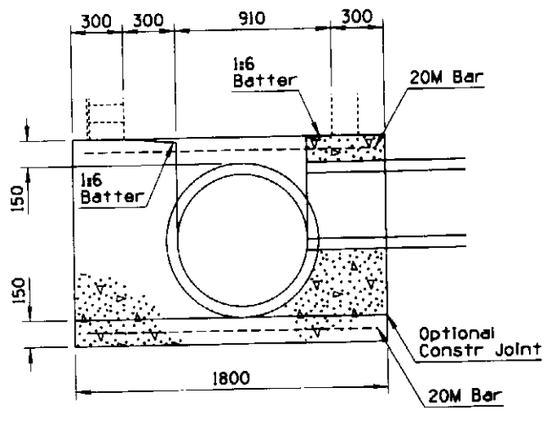

SECTION
STANDARD BASE STRUCTURE
FOR PIPES 150 TO 910 I.D.

HALF PLAN
FOR PIPES 910 I.D. AND SMALLER

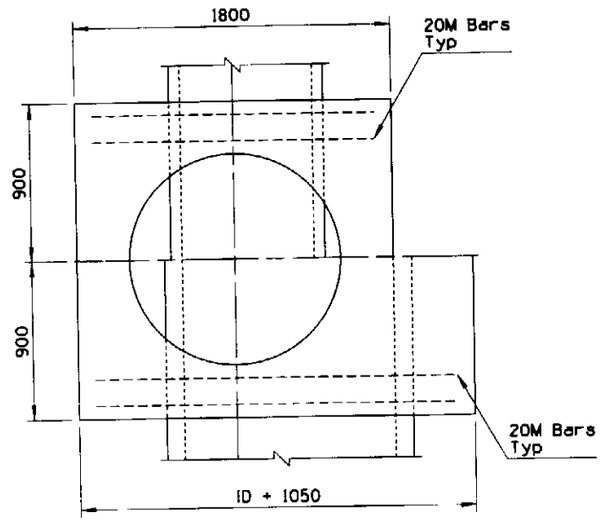

HALF PLAN
FOR PIPES OVER 910 I.D.

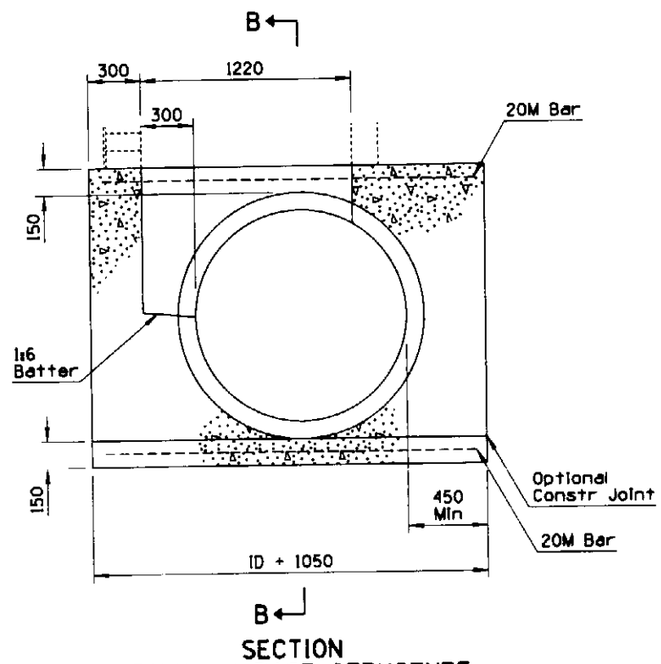

SECTION
STANDARD BASE STRUCTURE
FOR PIPES OVER 910 I.D.

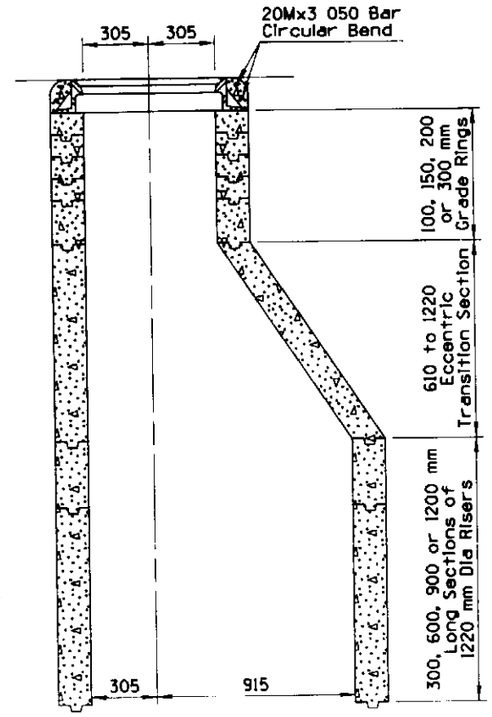

SECTION
MANHOLE NO. 3
PRECAST REINFORCED CONCRETE

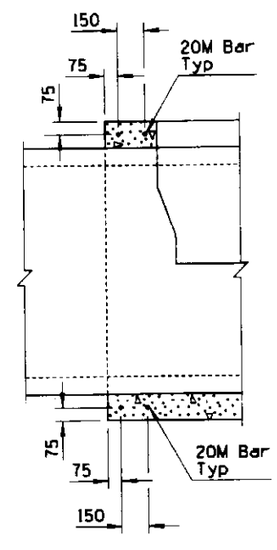

PART SECTION B-B

GENERAL NOTES

1. Precast Manholes shall conform to the requirements of AASHTO M 199M except that the compressive strength of each unit will be determined and accepted in accordance with Section 1006.7 of the ADOT Specifications.
2. Concrete for all other manholes shall be Class B.
3. Every fifth course of bricks in Manhole No. 1 shall be laid as stretchers.
4. See Std C-18.30 and C-18.40 for additional information and dimensions.
5. See plans for Std C-18.20 frame and cover type.
6. Steps shall be placed in manholes in accordance with the requirements of AASHTO M 199M.
7. See Std C-18.40 for location of Station Location Reference Point.
8. Manhole height, "H", shall be measured from the lowest pipe invert to the top of the manhole frame.

DESIGN APPROVED	STATE OF ARIZONA DEPARTMENT OF TRANSPORTATION DIVISION OF HIGHWAYS STANDARD DRAWINGS	ISSUE 6/95
APPROVED FOR DISTRIBUTION	MANHOLE DETAILS	DRAWING NO. C-18.10

Metric

NO	DESCRIPTION OF REVISIONS	MADE BY	DATE
1			
2			
3			
4			

Metric

GENERAL NOTES

1. When specified on the plans, the cover (excluding grates) shall include agency identification and conform to the following: Lettering on manhole cover to contain name of agency and utility as directed. Letters and words to be equally spaced. Letters to be 51 mm in height and raised 3 mm above level of cover. Type of letters and layout to be submitted for approval.
2. Casting weights shown are minimum weights and are for either cast iron or ductile iron castings. Maximum casting weights shall not exceed 105 percent of weights shown.
3. M18 loading minimum.
4. Details shown are typical.
5. Alternate designs of manhole frame and cover may be utilized with the approval of the engineer as long as minimum loading and weight are equivalent.

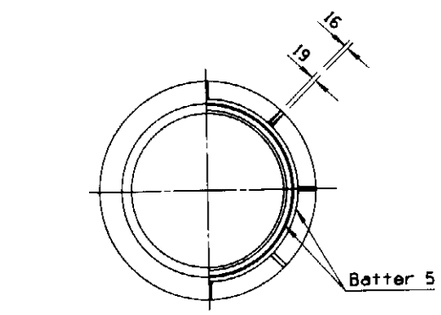

BOTTOM VIEW - TOP VIEW

TOP VIEW

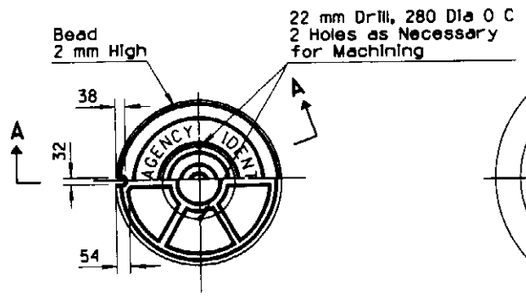

BOTTOM VIEW

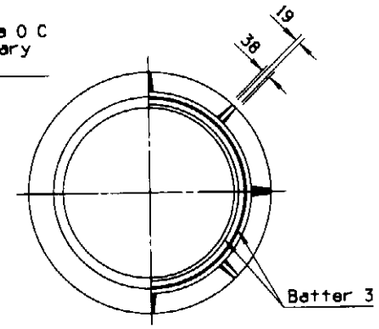

BOTTOM VIEW - TOP VIEW

TOP VIEW

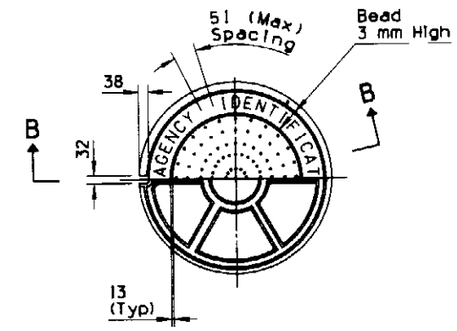

BOTTOM VIEW

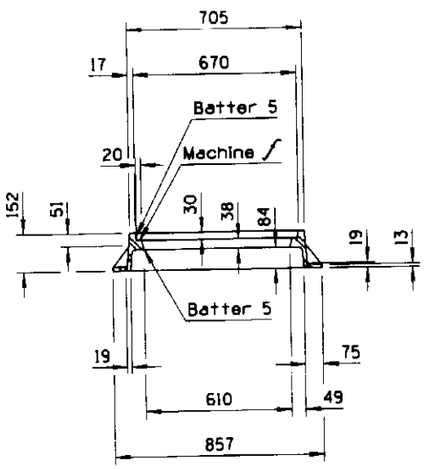

SECTION OF FRAME

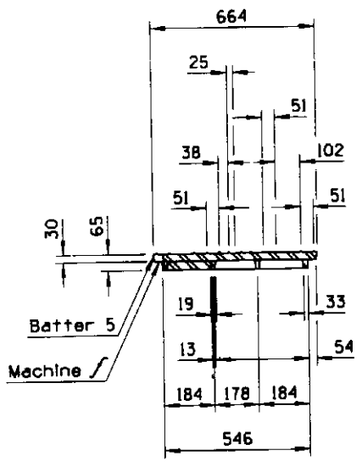

SECTION A-A OF COVER

610 mm MANHOLE FRAME & COVER

Approx Wt: Frame 78.4 kg
Cover 77.1 kg

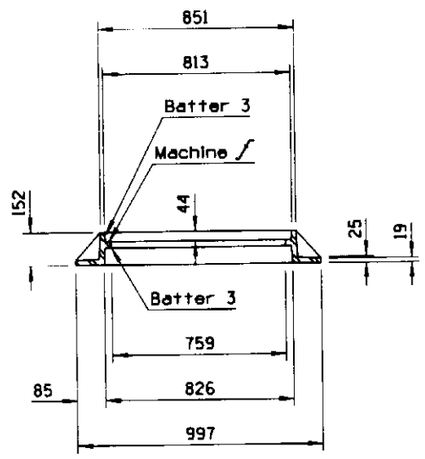

SECTION OF FRAME

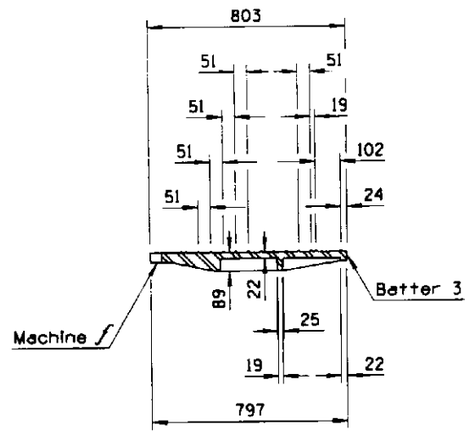

SECTION B-B

760 mm MANHOLE FRAME & COVER

Approx Wt: Frame 92.5 kg
Cover 101.1 kg

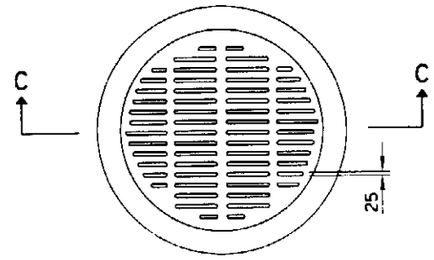

PLAN

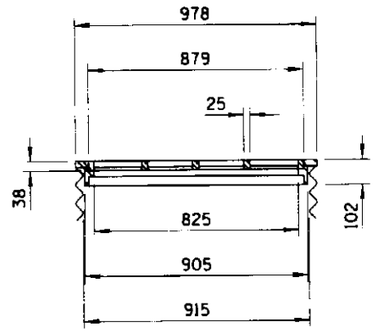

SECTION C-C

910 mm NOMINAL CMP FRAME & GRATE

Approx Wt: Frame 56.7 kg
Cover 75.7 kg

DESIGN APPROVED Lewis H. Otterness	STATE OF ARIZONA DEPARTMENT OF TRANSPORTATION DIVISION OF HIGHWAYS STANDARD DRAWINGS	ISSUE 6/95
APPROVED FOR DISTRIBUTION Ronald Williams	MANHOLE FRAME AND COVER DETAILS	DRAWING NO. C-18.20

Metric

NO	DESCRIPTION OF REVISIONS	MADE BY	DATE
1			
2			
3			
4			

Metric

GENERAL NOTES

1. All dimensions are minimum except where noted.
2. Location & elevation shown on plans.
3. Compaction to conform to Sect. 303-2 or 501.

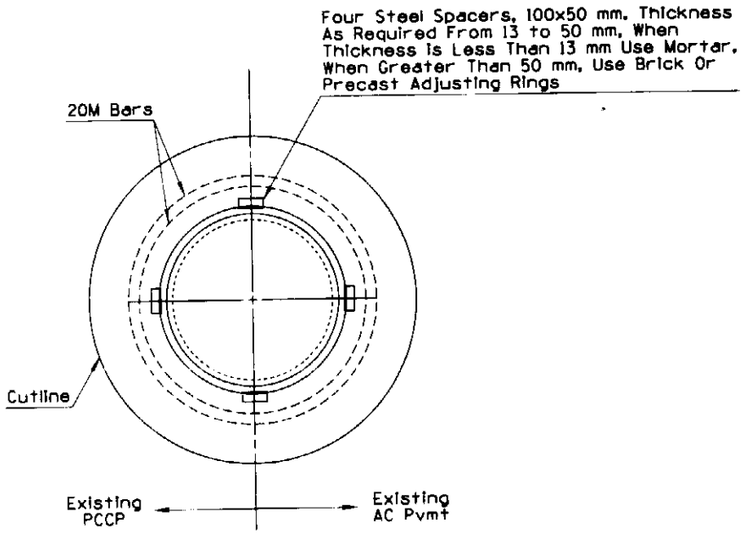

PLAN

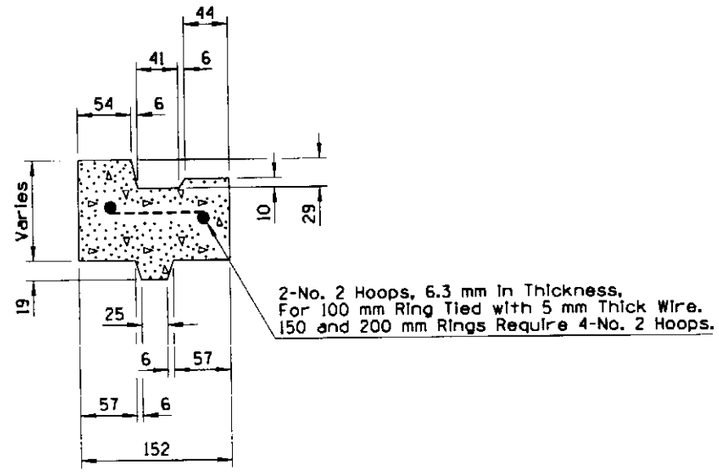

PRECAST ADJUSTING RING DETAIL

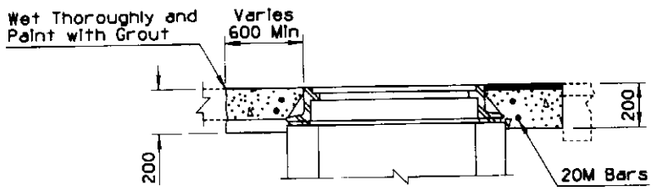

SECTION
MANHOLE COVER FRAME
ADJUSTMENT - PAVEMENT
CUT AND REPLACEMENT

DESIGN APPROVED: Steven H. Otterness	STATE OF ARIZONA DEPARTMENT OF TRANSPORTATION DIVISION OF HIGHWAYS STANDARD DRAWINGS	ISSUE: 6/95
APPROVED FOR DISTRIBUTION: Ronald C. Wallace	MISCELLANEOUS MANHOLE DETAILS	DRAWING NO. C-18.30

Metric

NO	DESCRIPTION OF REVISIONS	MADE BY	DATE
1			
2			
3			
4			

Metric

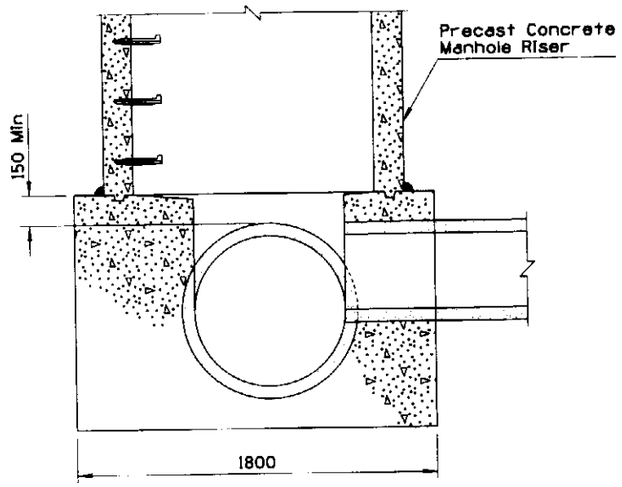

END VIEW

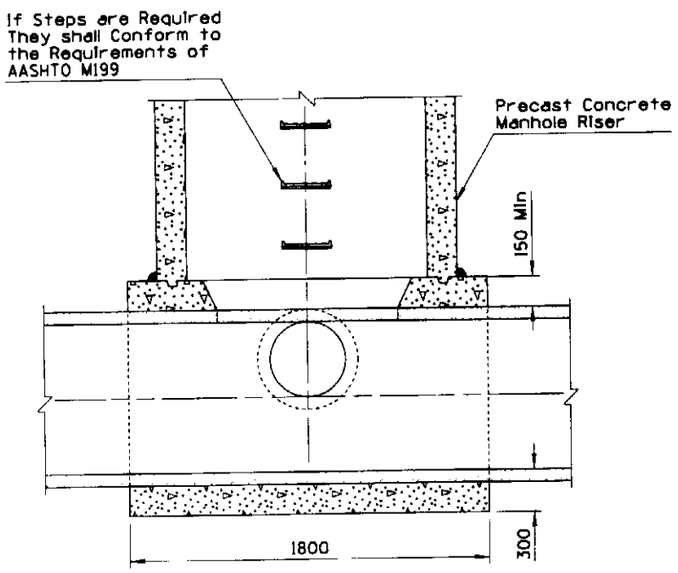

SIDE VIEW

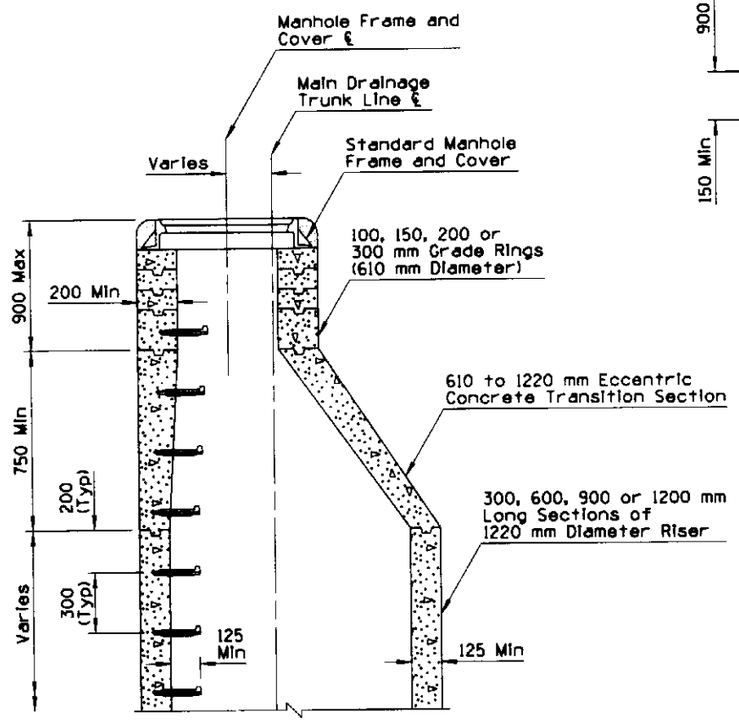

NORMAL INSTALLATION

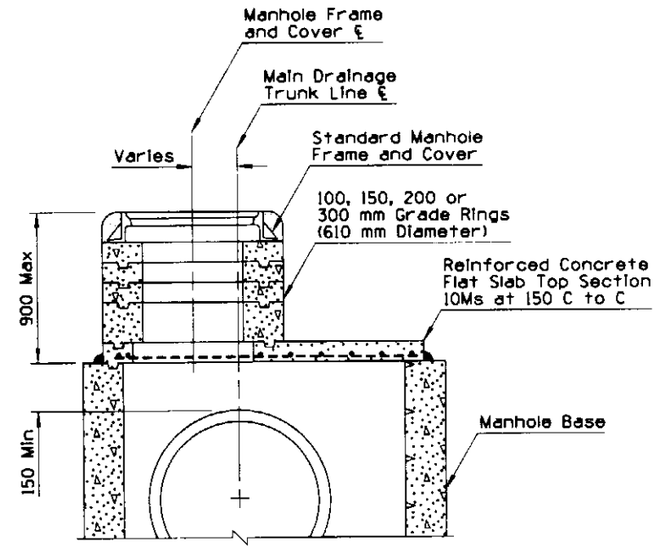

SHALLOW INSTALLATION

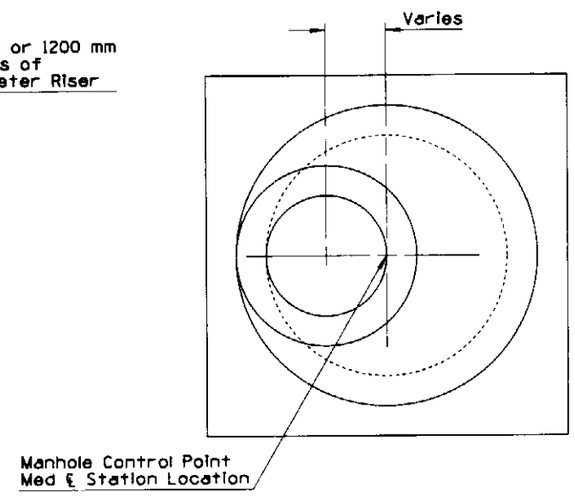

TOP VIEW

DESIGN APPROVED	STATE OF ARIZONA DEPARTMENT OF TRANSPORTATION DIVISION OF HIGHWAYS STANDARD DRAWINGS	ISSUE 6/95
APPROVED FOR DISTRIBUTION	MANHOLE RISER DETAILS	DRAWING NO. C-18.40

Metric

NO.	DESCRIPTION OF REVISIONS	MADE BY	DATE
1			
2			
3			
4			

Metric

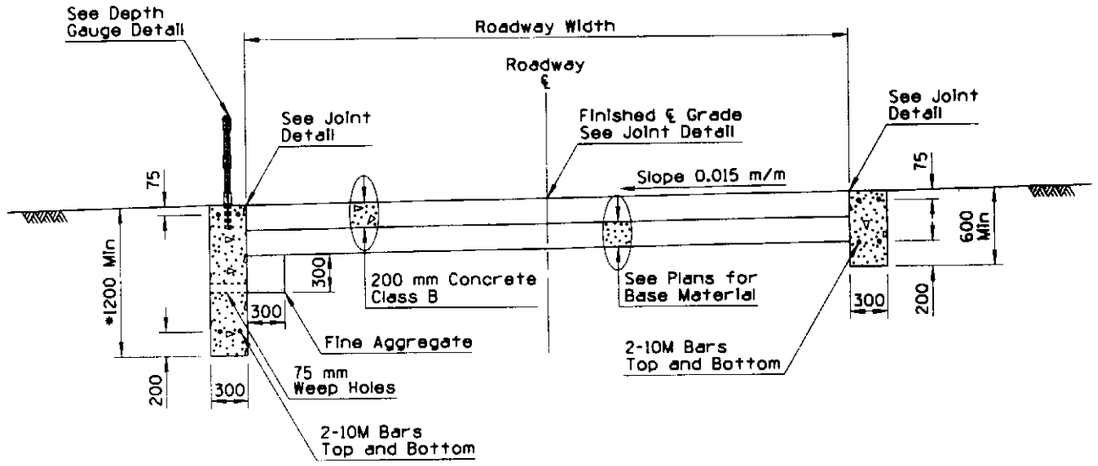

CONCRETE SURFACE ROAD
CONCRETE WALLS

* Min Distance Below Stream Bed

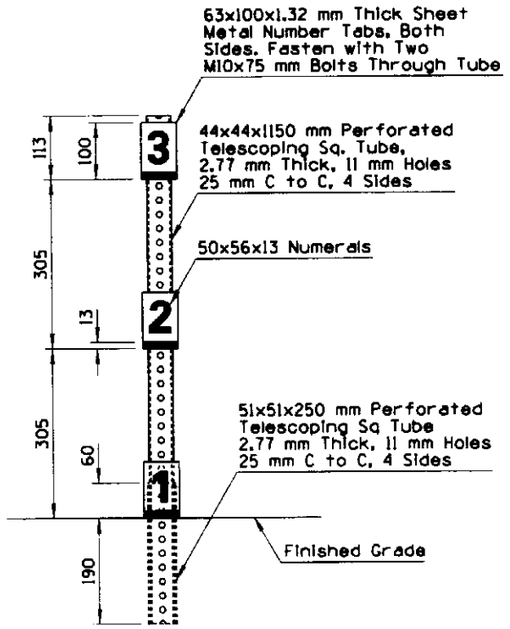

DEPTH GAUGE DETAIL

GENERAL NOTES

1. Ford walls shall be Class B concrete.
2. Depth gauge tubing shall be protected against concrete entering through bottom or perforations.
3. Depth gauge tubing and both sides of numeral tabs shall be painted with two coats of white enamel. Numerals and markers shall be painted with one coat of gloss black enamel.

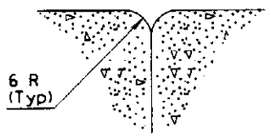

JOINT DETAIL

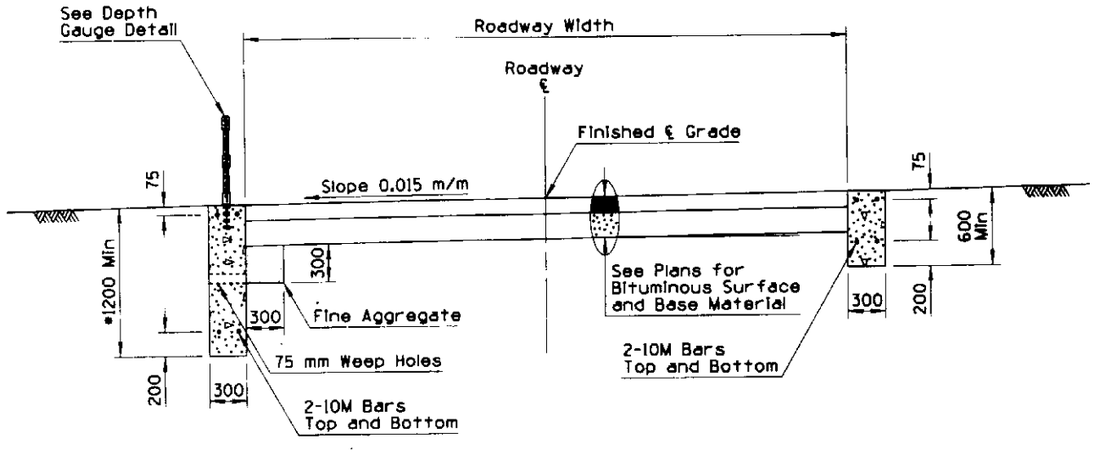

BITUMINOUS SURFACE ROAD
CONCRETE WALLS

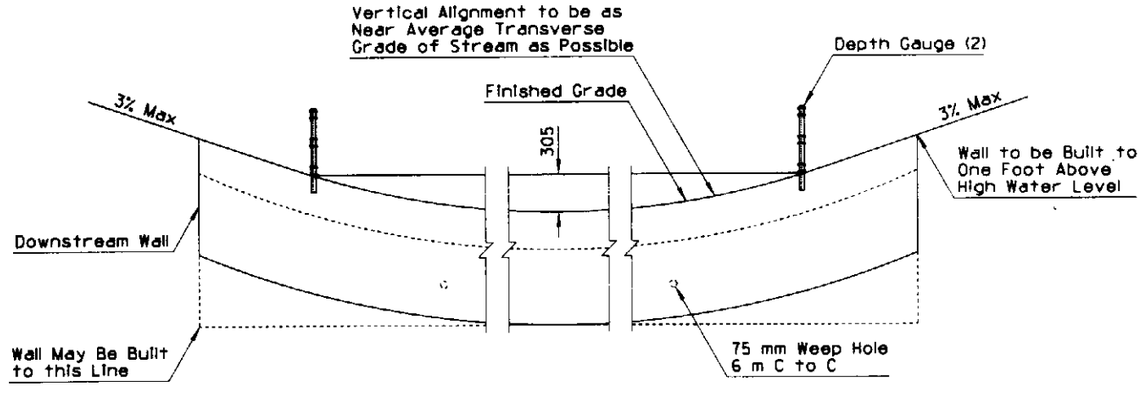

ELEVATION LOOKING UPSTREAM

DESIGN APPROVED	STATE OF ARIZONA DEPARTMENT OF TRANSPORTATION DIVISION OF HIGHWAYS STANDARD DRAWINGS	ISSUE 6/95
APPROVED FOR DISTRIBUTION	FORD - CONCRETE WALLS	DRAWING NO. C-19.10

Metric

NO	DESCRIPTION OF REVISIONS	MADE BY	DATE
1			
2			
3			
4			

Metric

GENERAL NOTES

1. All timber shall be rough, pressure treated and unpainted.
2. Rock basket, full length of structure, shall be included only when called for on plans.
3. See plans for bituminous surface and base material details.
4. See Std C-19.10 for Depth Gauge details. Depth Gauge foundation may be utility concrete.

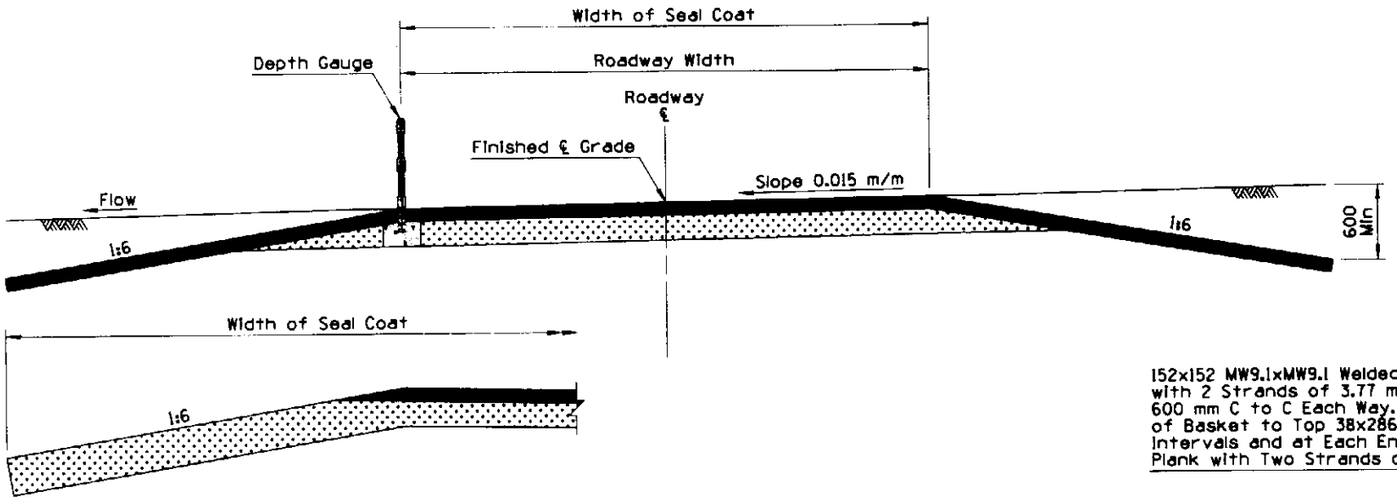

WITH TREATED BASE

TYPE 1
BITUMINOUS SURFACE ROAD

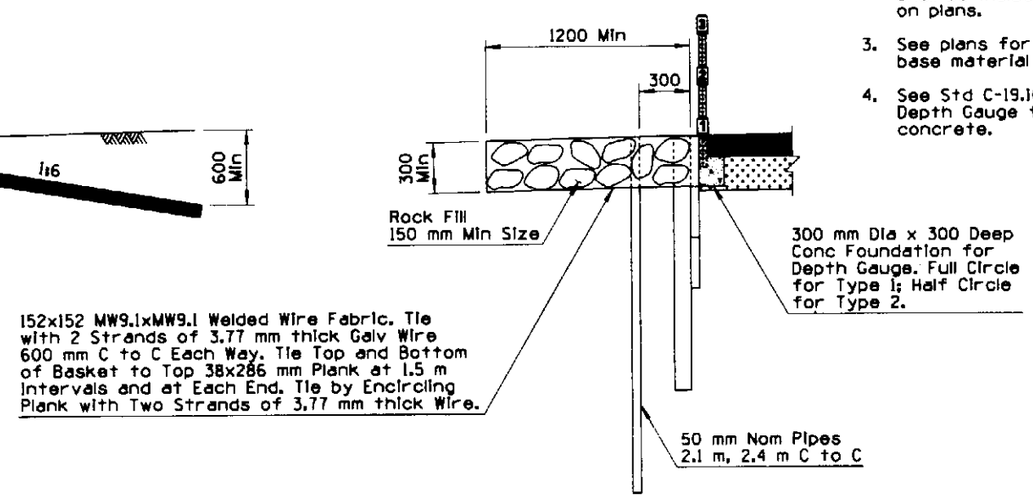

DETAIL A

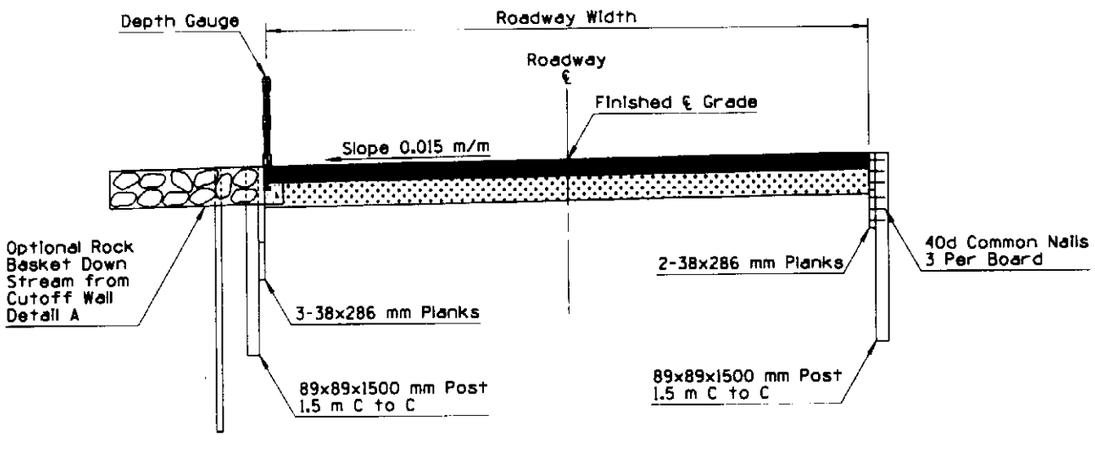

TYPE 2
BITUMINOUS SURFACE FORD
TIMBER CUTOFF WALLS

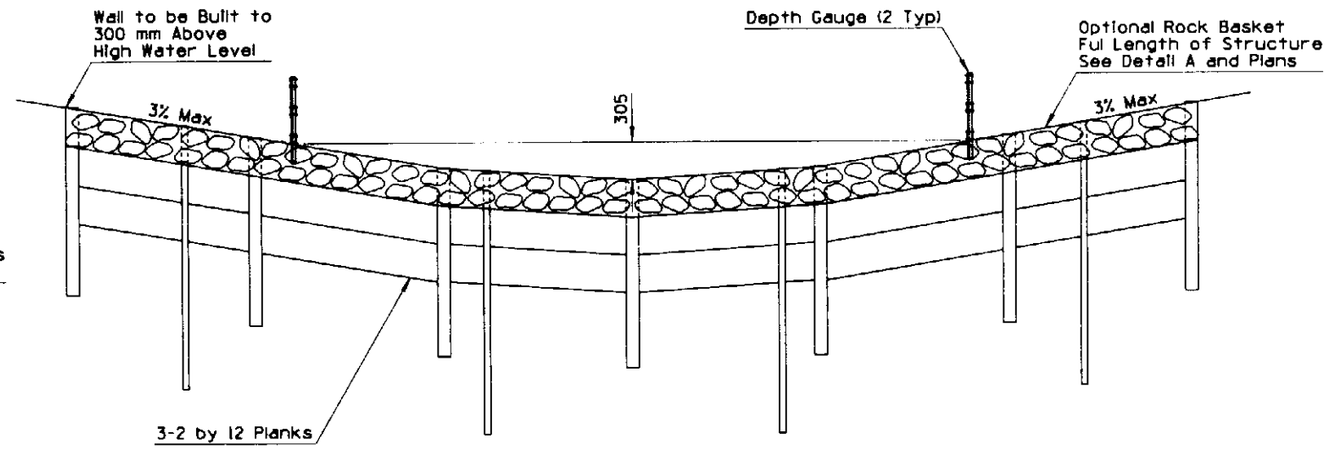

ELEVATION - TYPE 2

DESIGN APPROVED	STATE OF ARIZONA DEPARTMENT OF TRANSPORTATION DIVISION OF HIGHWAYS STANDARD DRAWINGS	ISSUE 6/95
APPROVED FOR DISTRIBUTION	FORD - TYPES 1 AND 2	DRAWING NO. C-19.20

Metric

NO.	DESCRIPTION OF REVISIONS	MADE BY	DATE
1			
2			
3			
4			

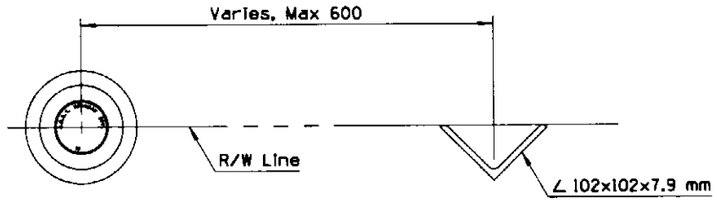

PLAN

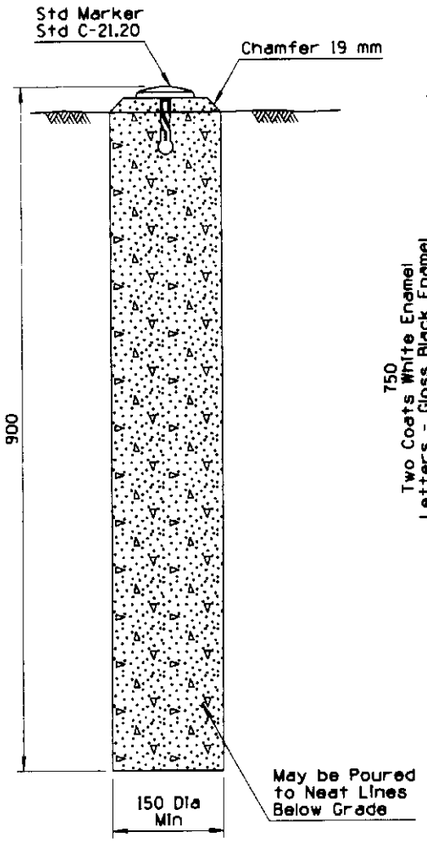

ELEVATION
SURVEY MONUMENT

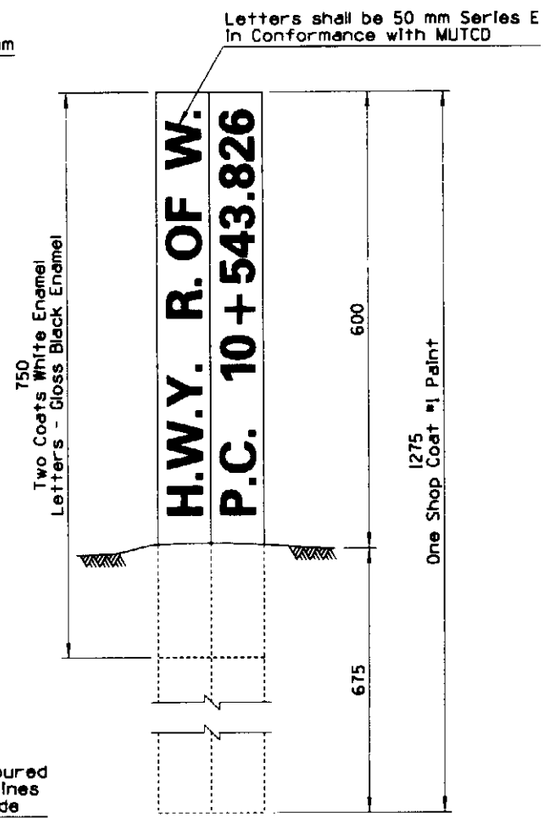

ELEVATION
REFERENCE MARKER

RIGHT OF WAY MARKER

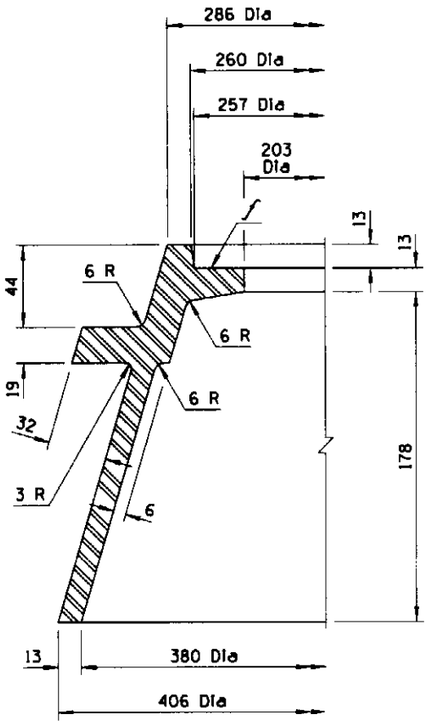

FRAME A

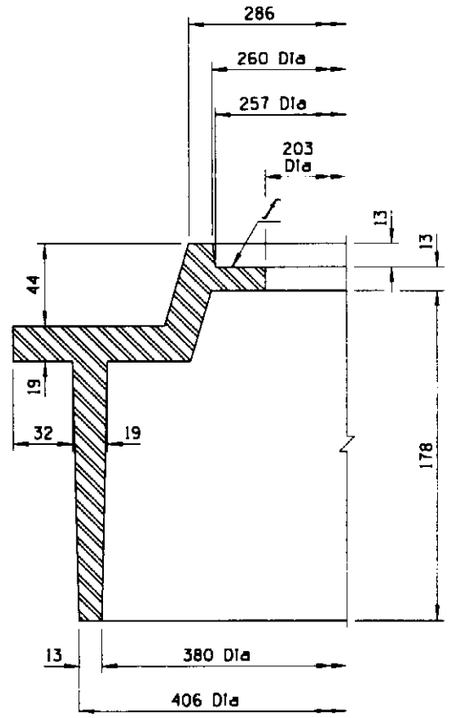

FRAME B

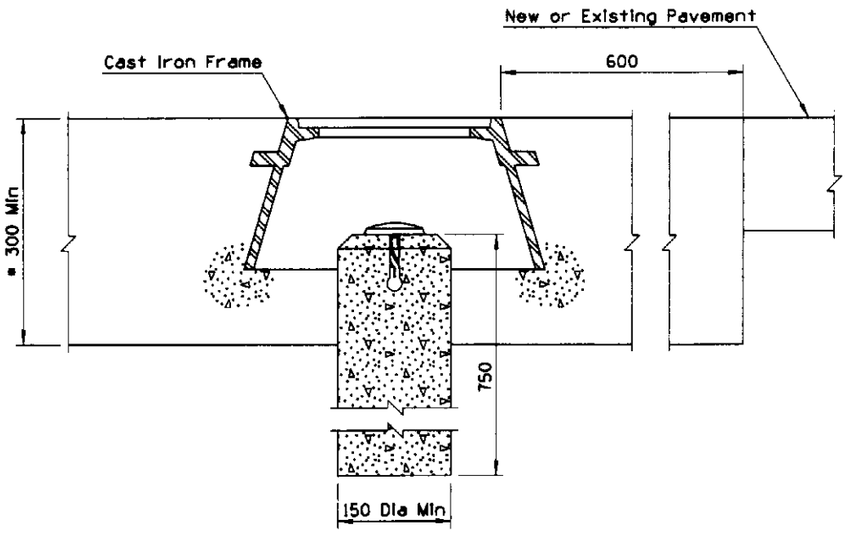

SURVEY MONUMENT
FRAME AND COVER

GENERAL NOTES

1. A survey monument, frame and cover, complete in place shall be considered a unit.
2. A right of way marker, consisting of a survey monument and a reference marker complete in place shall be considered a unit.
3. All markers shall be placed as shown on the plans or as directed by the engineer.
4. Frames may be either Type A or Type B.
5. Frames shall weigh at least 24 kg.
6. Covers shall weigh at least 7 kg.
7. Portions of the frame and cover to be machined is shown by the symbol "∫". The allowable tolerance for machined areas shall be ±0.4 mm. Concrete shall conform to the requirements of the specifications.

* 300 mm or pavement structure thickness, whichever is greater.

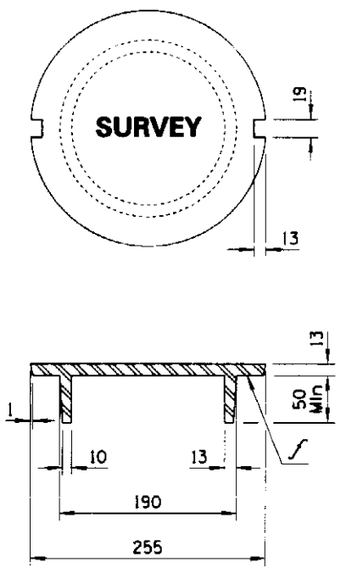

COVER SECTION

DESIGN APPROVED	STATE OF ARIZONA DEPARTMENT OF TRANSPORTATION DIVISION OF HIGHWAYS STANDARD DRAWINGS	ISSUE 6/95
APPROVED FOR DISTRIBUTION	SURVEY MONUMENT, FRAME AND COVER, RIGHT OF WAY MARKER	DRAWING NO. C-21.10

NO.	DESCRIPTION OF REVISIONS	MADE BY	DATE
1			
2			
3			
4			

Metric

GENERAL NOTES

1. Standard Marker may be used as bench, survey monument or R/W markers.
2. Standard Marker shall be made of brass, bronze or aluminum.
3. Standard Marker will be furnished by the Department. Cast-in lettering format may vary.
4. Bench Marks shall be established on headwalls, bridge curbs or other permanent structures.
5. Surfaces of Aluminum Markers in contact with concrete shall be epoxy coated.
6. Fluted shank may be straight or twisted.
7. Station, Elevation, Year, or other information shall be hand stamped in field, as approved by the Engineer.

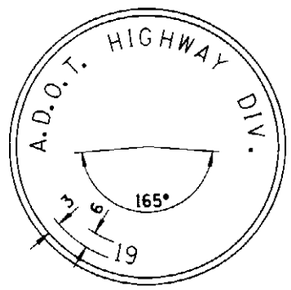

PLAN

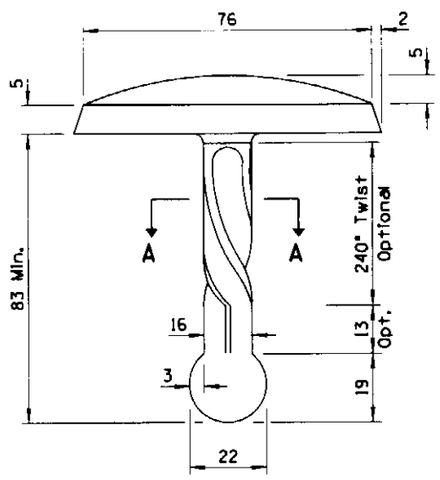

ELEVATION
STANDARD MARKER

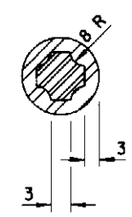

SECTION A-A

DESIGN APPROVED	STATE OF ARIZONA DEPARTMENT OF TRANSPORTATION DIVISION OF HIGHWAYS STANDARD DRAWINGS	ISSUE
Terry H. Otterness		6/95
APPROVED FOR DISTRIBUTION Ronald A. Williams	STANDARD MARKER	DRAWING NO. C-21.20

Metric

NO.	DESCRIPTION OF REVISIONS	MADE BY	DATE

GENERAL NOTES

1. All concrete shall be Class B.

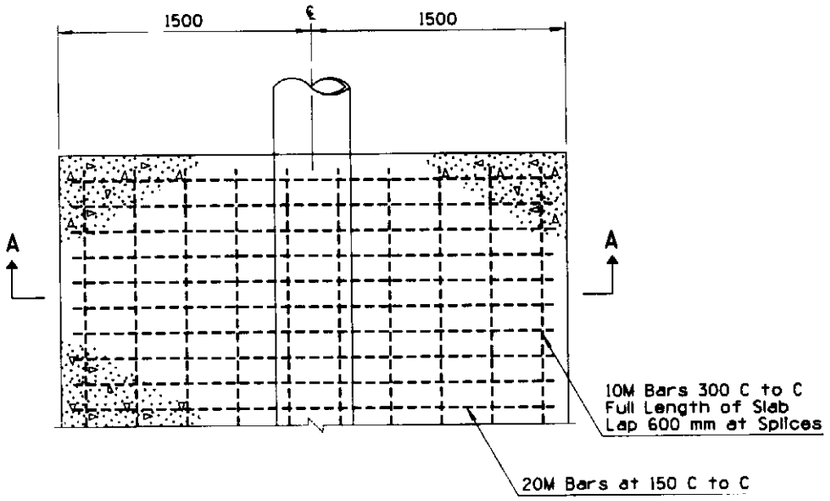

FOR SINGLE INSTALLATION	
QUANTITIES PER FT OF SLAB LENGTH	
CONCRETE	REINFORCING STEEL
0.237 m^3	16 kg

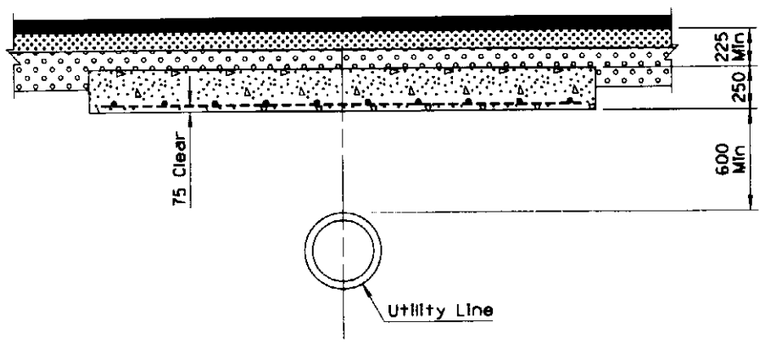

SECTION A-A

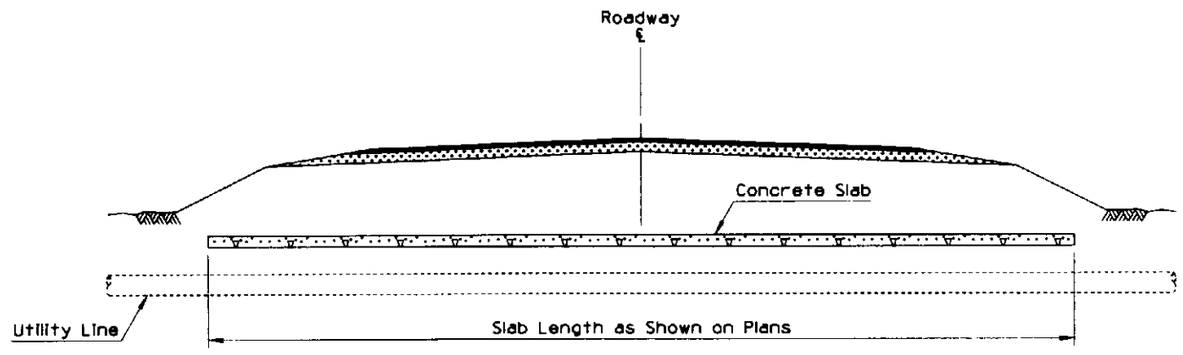

CROSS SECTION

DESIGN APPROVED	STATE OF ARIZONA DEPARTMENT OF TRANSPORTATION DIVISION OF HIGHWAYS STANDARD DRAWINGS	ISSUE 6/95
APPROVED FOR DISTRIBUTION	UTILITY LINE, PROTECTIVE CONCRETE SLAB	DRAWING NO. C-22.10

NO	DESCRIPTION OF REVISIONS	MADE BY	DATE
1			
2			
3			
4			

Metric

GENERAL NOTES

1. Type A encasement to be used for sewer laterals or house connections BELOW water lines.
2. Type B encasement to be used for sewer laterals or house connections ABOVE water lines.
3. The encasement shall extend at least 1.8 m on each side of the water line and must include the nearest joint.
4. Protection for Type A required when distance from bottom of water to top of sewer line is 600 mm or less. When the sewer is a 100 or 150 mm house connection no protection is required if distance is more than 300 mm.
5. For Type A crossings, Class 150 C.I.P. or ductile iron pipe may be used as an alternate. For Type B crossing reinforced encasement is always required.

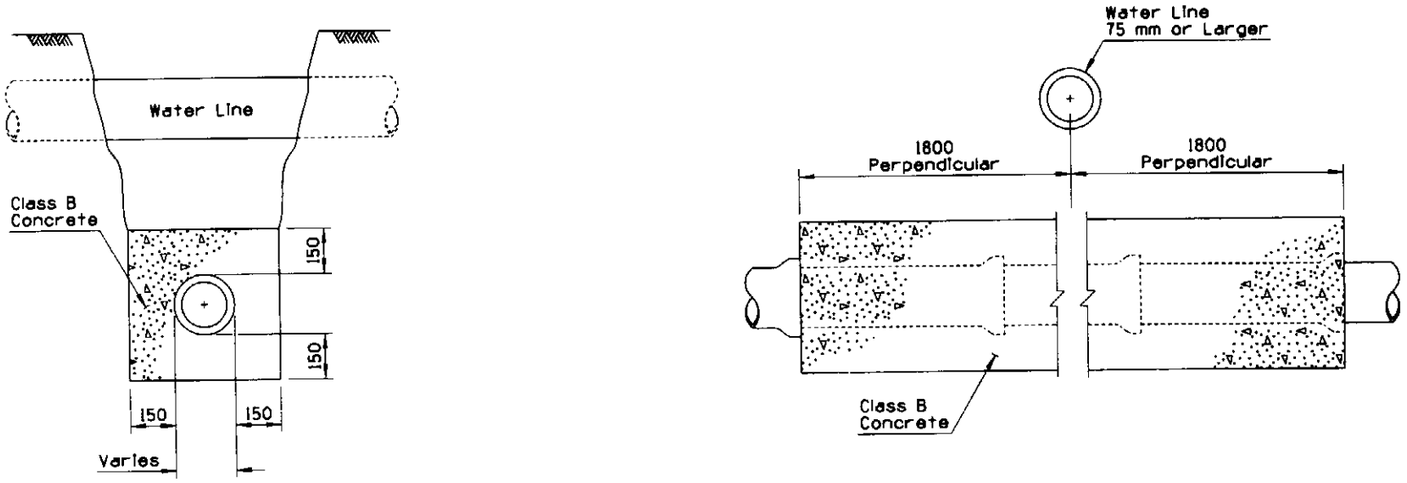

TYPE A ENCASEMENT

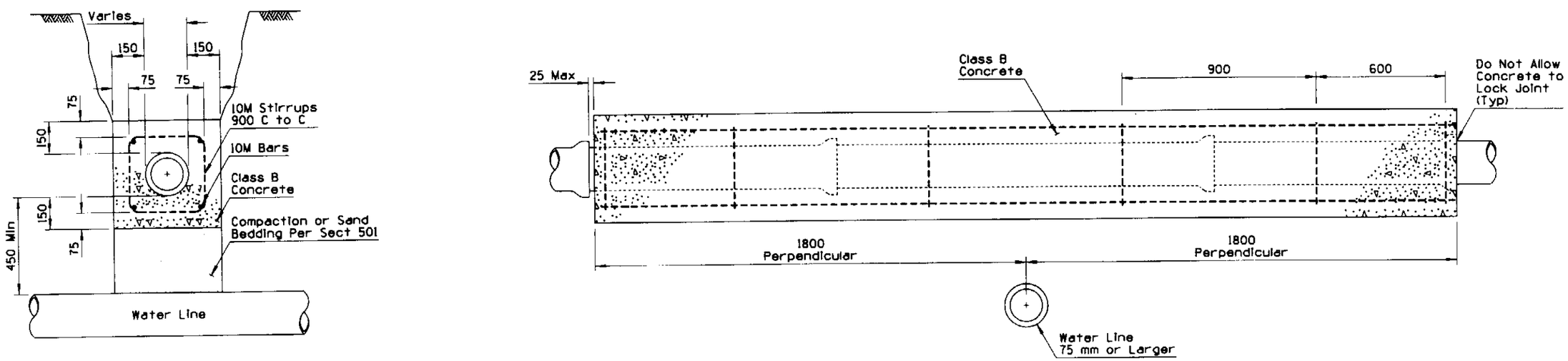

TYPE B ENCASEMENT

DESIGN APPROVED	STATE OF ARIZONA DEPARTMENT OF TRANSPORTATION DIVISION OF HIGHWAYS STANDARD DRAWINGS	ISSUE 6/95
APPROVED FOR DISTRIBUTION	SANITARY SEWER ENCASEMENT	DRAWING NO. C-22.15

Metric

NO	DESCRIPTION OF REVISIONS	MADE BY	DATE
1			
2			
3			
4			

Metric

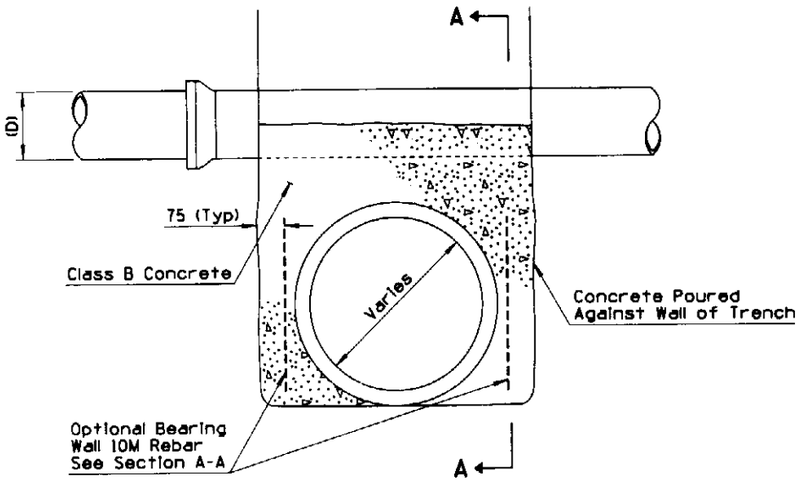

TYPE A

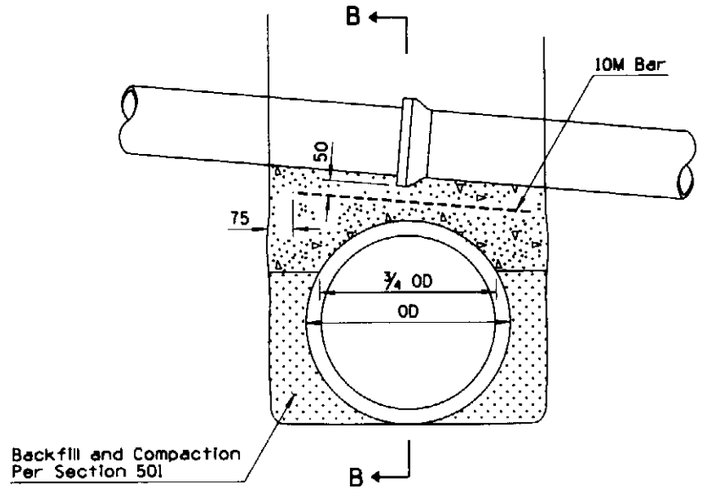

TYPE B

GENERAL NOTES

1. Type A pipe support may be used for any Type crossing condition.
2. Type C pipe support may be used for crossing pipes with a bell diameter of 460 mm or less if sufficient clearance over storm sewer is available and total span is less than 10.3 m.
3. Intermediate pipe support shall be used in conjunction with Type C pipe support if total span exceeds max. W in table.
4. The contractor shall be responsible for furnishing all supports both permanent and temporary. Temporary supports shall not be a separate pay item.
5. Permanent pipe supports may be decreased from plan quantities or extended to include some listed below as temporary supports if conditions warrant these changes at the time of construction. Decision shall be made by the engineer.
6. When Type A pipe support is used and whenever so directed by the engineer, the contractor shall pierce the wall with suitable openings to prevent unequal pressure resulting from flooding of the backfill. The volume of the pierced opening shall not exceed 1/2 the volume of the supporting wall.
7. Use Type B pipe support instead of Type C when clearance between pipes is less than Y in table.
8. Concrete cover for reinforcing steel shall be 75 mm, minimum.

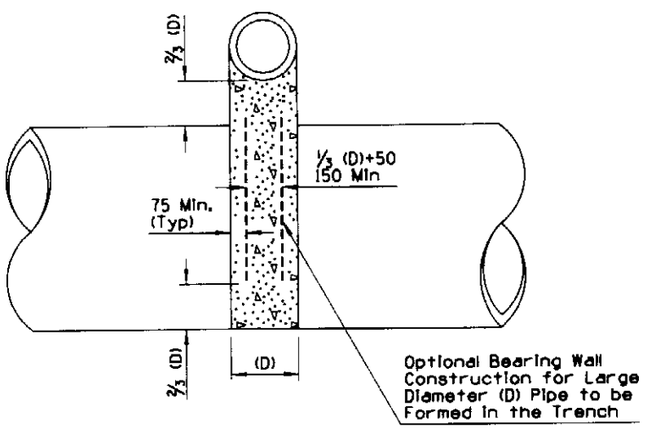

SECTION A-A

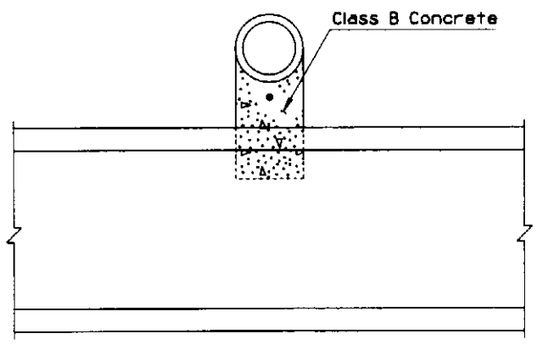

SECTION B-B

SCHEDULE OF REQUIRED SUPPORTS		
PERMANENT	TEMPORARY	
Sewer Lines	Cast Iron Pipe	Conc Storm Drain
	Conc Irrig Pipe	Conc Box Culvert
	Buried Telco	Traffic Control Conduit
	Gas Pipes	Water and Sewer Lines

NOTE:
Other utilities as noted on the plans or as required by the engineer at time of construction.

DESIGN APPROVED	STATE OF ARIZONA DEPARTMENT OF TRANSPORTATION DIVISION OF HIGHWAYS STANDARD DRAWINGS	ISSUE 6/95
APPROVED FOR DISTRIBUTION	PIPE SUPPORT ACROSS TRENCHES	DRAWING NO. C-22.20 Sheet 1 of 3

Metric

NO	DESCRIPTION OF REVISIONS	MADE BY	DATE
1			
2			
3			
4			
5			

Metric

TABLE				
	DEPTH OF COVER ON SUPPORTS			
	0 TO 2.4 m		2.4 m TO 4.8 m	
'W'	BAR NO.	Y	BAR NO.	Y
TO 1.8 m	15M	200	20M	275
2.1 m	15M	225	20M	300
2.4 m	15M	250	20M	325
2.7 m	20M	275	20M	350
3.0 m	20M	300	25M	375
3.3 m	20M	325	25M	400
3.6 m	20M	350	25M	425
3.9 m	25M	375	25M	475
4.2 m	25M	400	25M	500
4.5 m	25M	425	25M	525
4.8 m	25M	450		
5.1 m	25M	475		

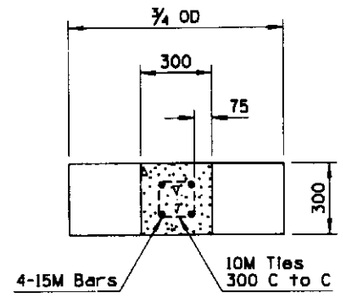

SECTION C-C

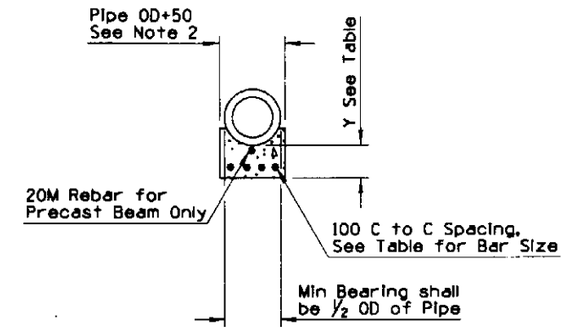

SECTION D-D

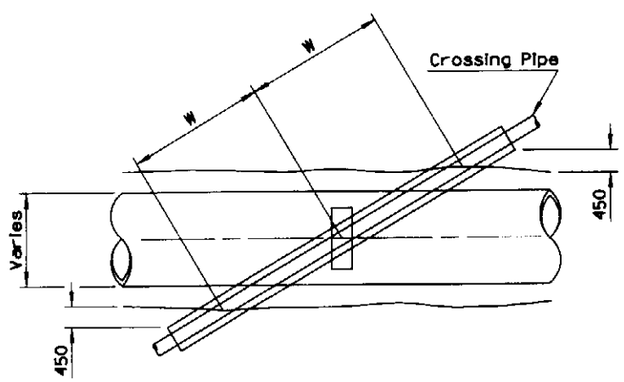

PLAN FOR TYPE B SUPPORT

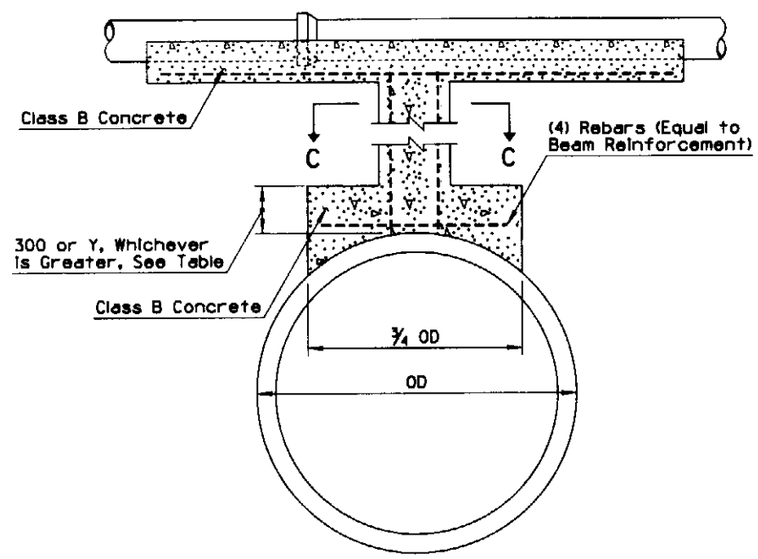

INTERMEDIATE SUPPORT FOR
TYPE B CROSSINGS

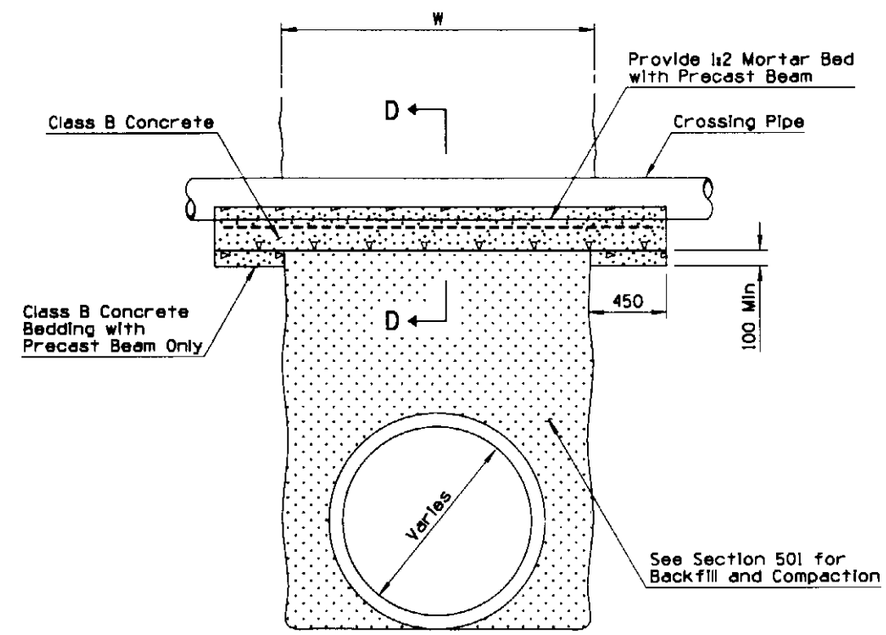

TYPE C

DESIGN APPROVED	STATE OF ARIZONA DEPARTMENT OF TRANSPORTATION DIVISION OF HIGHWAYS STANDARD DRAWINGS	ISSUE 6/95
APPROVED FOR DISTRIBUTION	PIPE SUPPORT ACROSS TRENCHES	DRAWING NO. C-22.20 Sheet 2 of 3

Metric

NO	DESCRIPTION OF REVISIONS	MADE BY	DATE
1			
2			
3			
4			

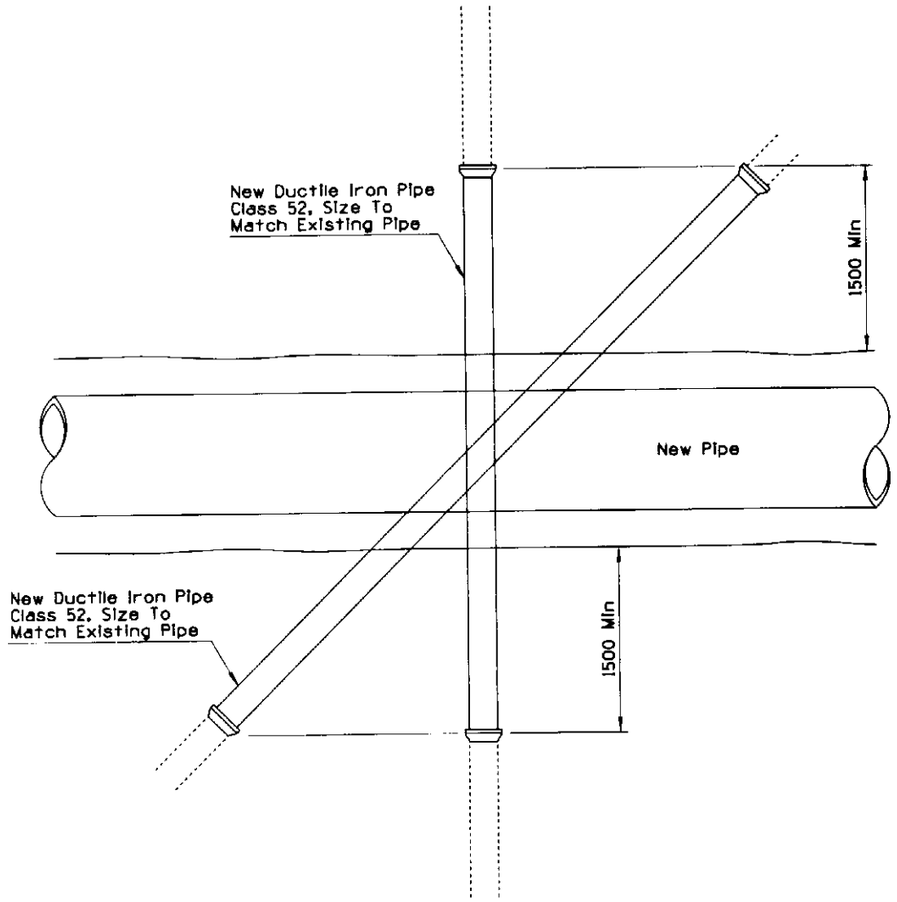

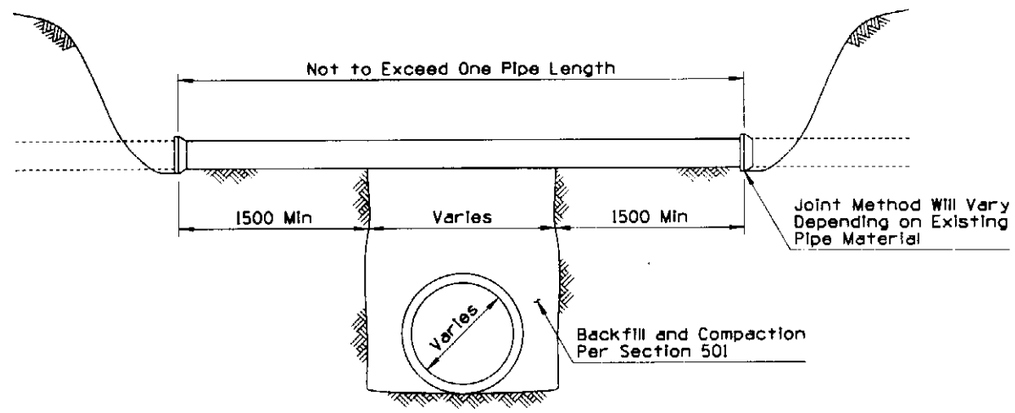

ALTERNATE TO PIPE SUPPORT

DESIGN APPROVED Terry H Otterness	STATE OF ARIZONA DEPARTMENT OF TRANSPORTATION DIVISION OF HIGHWAYS STANDARD DRAWINGS	ISSUE 6/95
APPROVED FOR DISTRIBUTION Ronald C Williams	PIPE SUPPORT ACROSS TRENCHES	DRAWING NO. C-22.20 Sheet 3 of 3

NO	DESCRIPTION OF REVISIONS	MADE BY	DATE
1			
2			
3			
4			

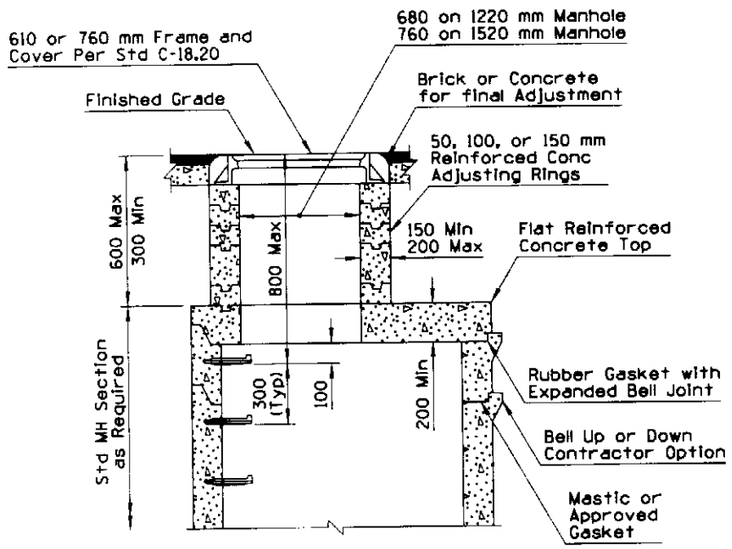

TYPE B TOP

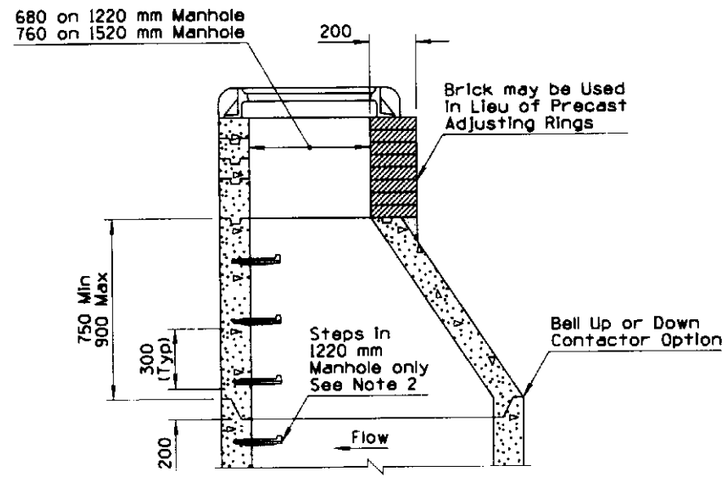

TYPE A TOP
Pre-Cast Eccentric
Conical Top Manhole

GENERAL NOTES

1. Pre-cast, reinforced manhole sections shall be manufactured in accordance with AASHTO M 199M except that the compressive strength of each unit will be determined and accepted in accordance with section 1006.7 of the specifications.
2. Manhole steps shall be installed at the site of the manhole section and manufactured in accordance with industry standards meeting AASHTO M 199M requirements. Steps not required in 1520 mm manhole.
3. Use low alkali cement only.
4. Pipe sizes and elevation shown on plans.
5. Frame and cover shall be adjusted to the finished grade prior to placing of the asphaltic concrete or PCCP surface.

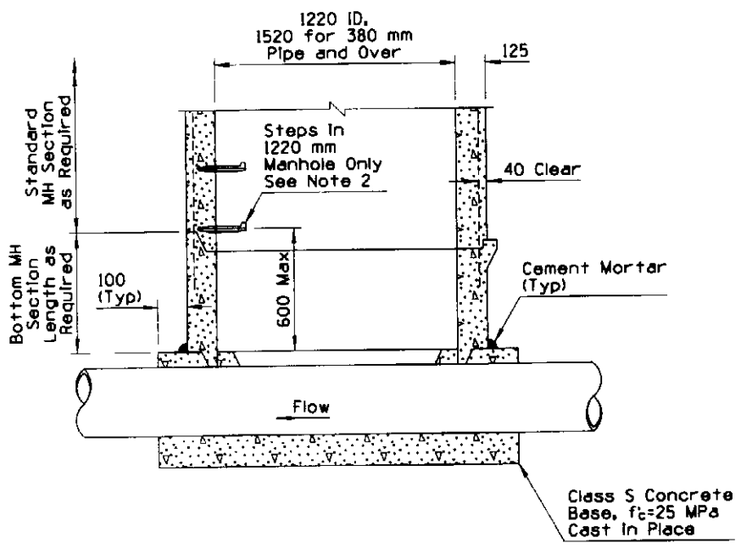

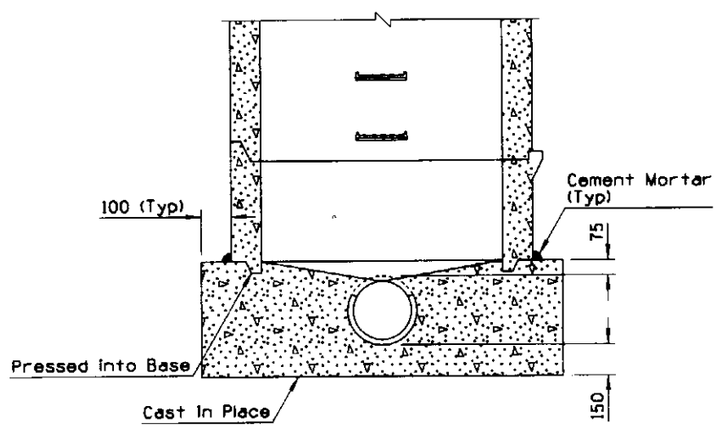

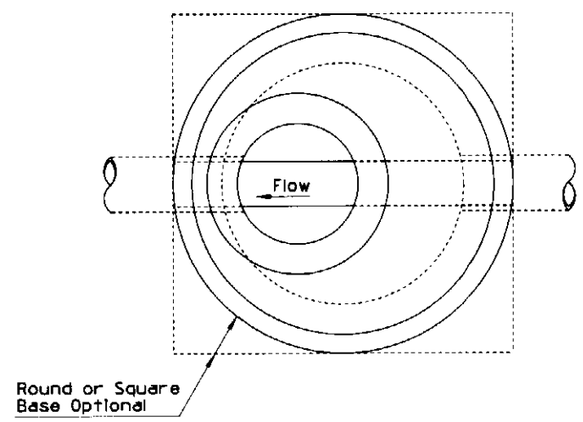

PRECAST SEWER MANHOLE

DESIGN APPROVED	STATE OF ARIZONA DEPARTMENT OF TRANSPORTATION DIVISION OF HIGHWAYS STANDARD DRAWINGS	ISSUE 6/95
APPROVED FOR DISTRIBUTION	PRECAST SANITARY SEWER MANHOLES	DRAWING NO. C-22.25

NO	DESCRIPTION OF REVISIONS	MADE BY	DATE
1			
2			
3			
4			

Metric

GENERAL NOTES

1. Compact soil at end of pipe to 95% of maximum density.
2. If depth of cover is less than 1.5 m or greater than 3 m, increase plug thickness a minimum of 100 mm.

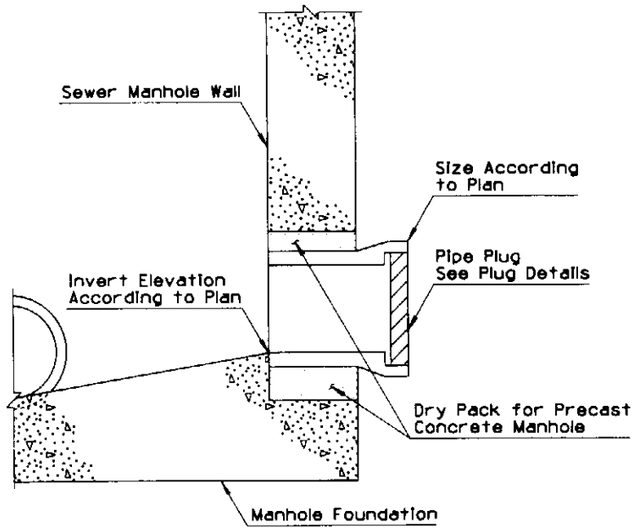

TYPICAL STUB OUT

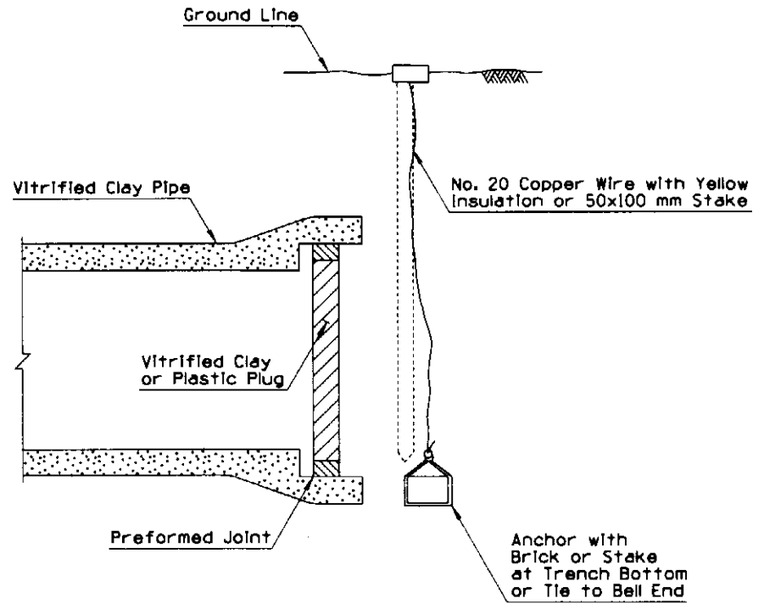

PIPE PLUG MARKER

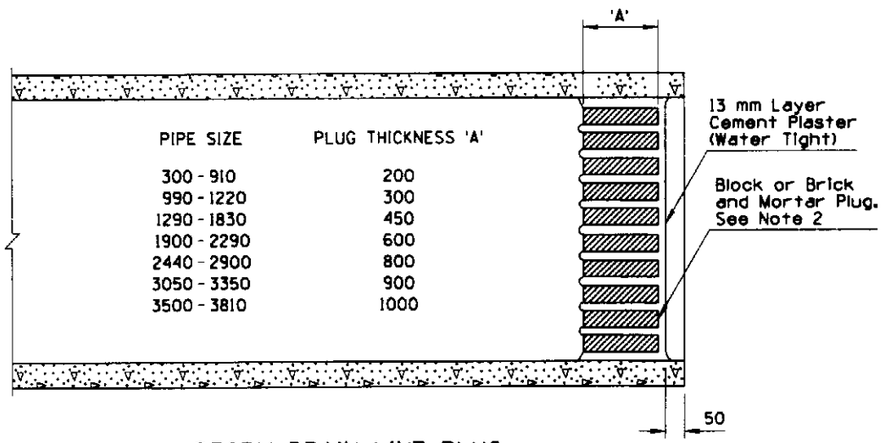

PIPE SIZE	PLUG THICKNESS 'A'
300 - 910	200
990 - 1220	300
1290 - 1830	450
1900 - 2290	600
2440 - 2900	800
3050 - 3350	900
3500 - 3810	1000

STORM DRAIN LINE PLUG

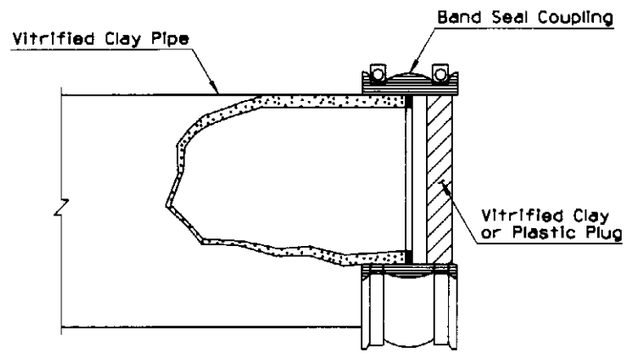

SEWER LINE PLUG

DESIGN APPROVED	STATE OF ARIZONA DEPARTMENT OF TRANSPORTATION DIVISION OF HIGHWAYS STANDARD DRAWINGS	ISSUE 6/95
APPROVED FOR DISTRIBUTION	STUB OUT AND PLUG	DRAWING NO. C-22.30

Metric

NO	DESCRIPTION OF REVISIONS	MADE BY	DATE
1			
2			
3			
4			

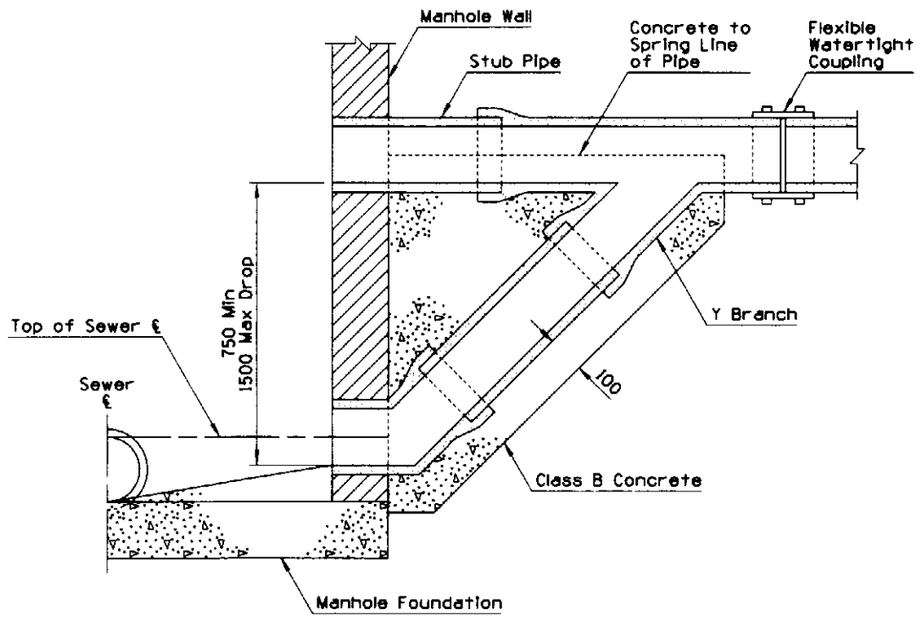

TYPE A
750 TO 1500 mm DROP

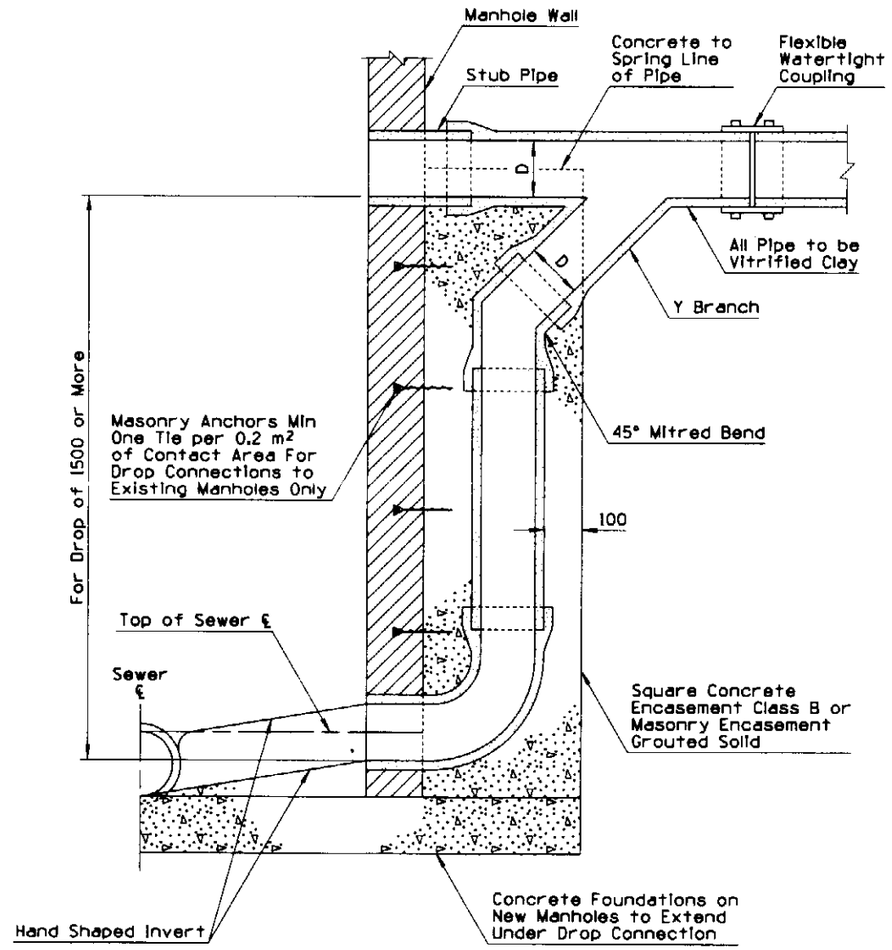

NOTE:
D = Same Diameter Pipe

TYPE B
1500 mm OR MORE DROP

DESIGN APPROVED	STATE OF ARIZONA DEPARTMENT OF TRANSPORTATION DIVISION OF HIGHWAYS STANDARD DRAWINGS	ISSUE 6/95
APPROVED FOR DISTRIBUTION	DROP SEWER CONNECTIONS	DRAWING NO. C-22.35

NO	DESCRIPTION OF REVISIONS	MADE BY	DATE
1			
2			
3			
4			

Metric

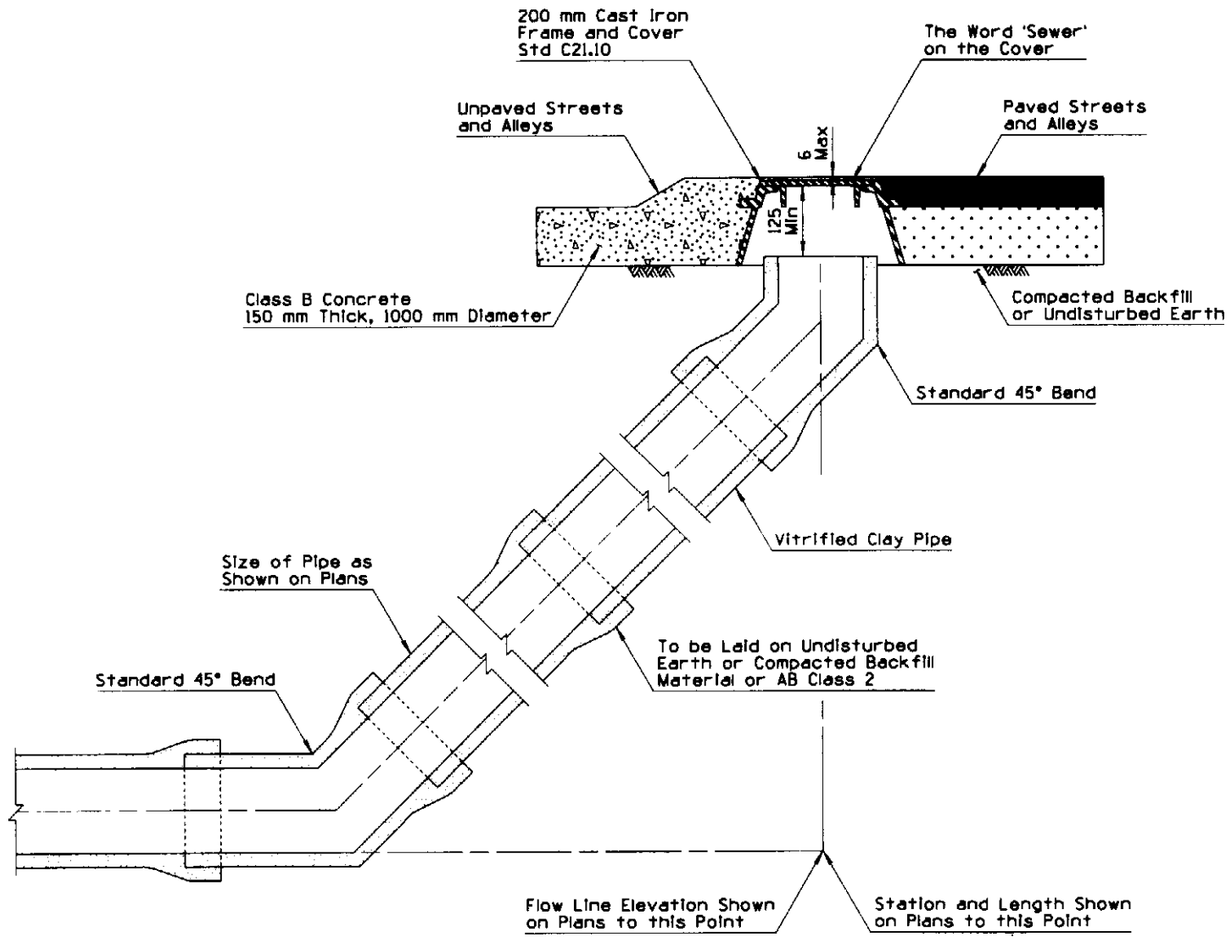

CLEANOUT INSTALLATION

DESIGN APPROVED Jerry H. Ottemann	STATE OF ARIZONA DEPARTMENT OF TRANSPORTATION DIVISION OF HIGHWAYS STANDARD DRAWINGS	ISSUE 6/95
APPROVED FOR DISTRIBUTION Ronald C. Williams	SEWER CLEANOUT	DRAWING NO. C-22.40

Metric

NO	DESCRIPTION OF REVISIONS	MADE BY	DATE
1			
2			
3			
4			

Metric

GENERAL NOTES

1. Thrust blocks are to extend to undisturbed ground.
2. All concrete shall be class B.
3. Table is based on 14 650 kg/m² soil. If conditions are found to indicate soil bearing less, the areas shall be increased accordingly.
4. Areas for pipe larger than 400 mm shall be calculated for each project.
5. Form all non bearing vertical surfaces.

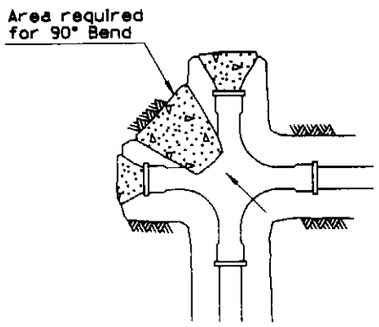

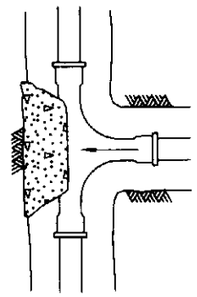

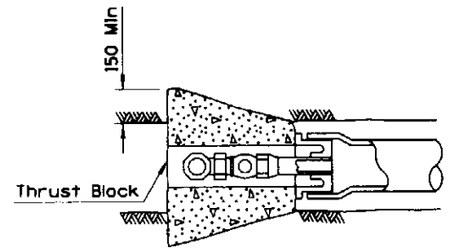

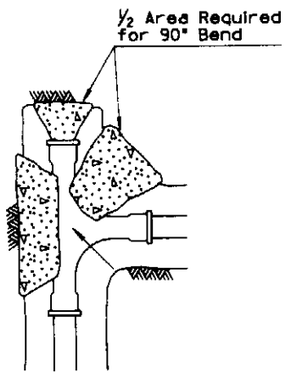

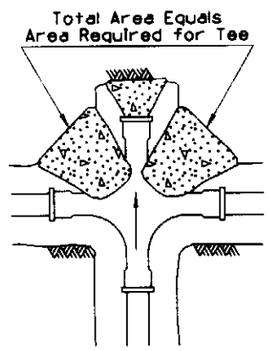

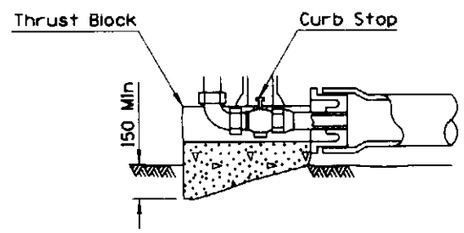

MINIMUM THRUST BLOCK AREA REQUIRED (Y x W)		
PIPE SIZE (mm)	WATER PIPE	
	TEE, DEAD END, 90° BEND	45° & 22½° BENDS
100 & LESS	0.28 m²	0.28 m²
150	0.37 "	0.28 "
200	0.56 "	0.28 "
250	0.84 "	0.46 "
300	1.21 "	0.65 "
400	2.14 "	1.11 "

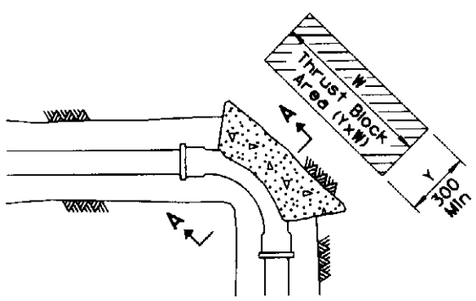

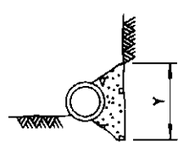

SECTION A-A

DESIGN APPROVED Larry H. Ottemess	STATE OF ARIZONA DEPARTMENT OF TRANSPORTATION DIVISION OF HIGHWAYS STANDARD DRAWINGS	ISSUE 6/95
APPROVED FOR DISTRIBUTION Ronald A. Williams	THRUST BLOCKS FOR WATER LINES	DRAWING NO. C-23.10

Metric

NO	DESCRIPTION OF REVISIONS	MADE BY	DATE
1			
2			
3			
4			

Metric

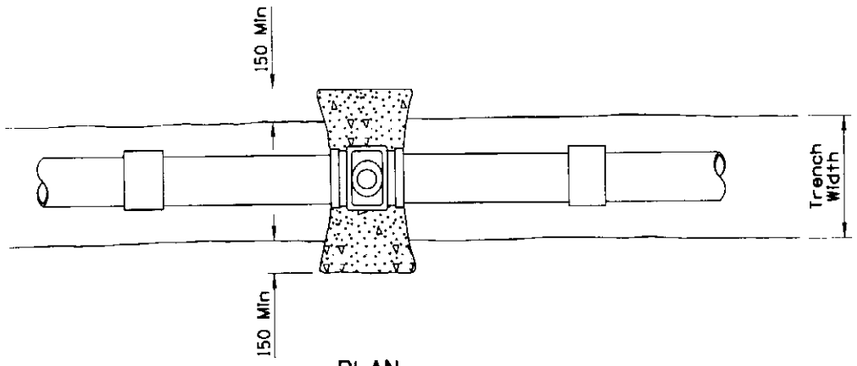

PLAN

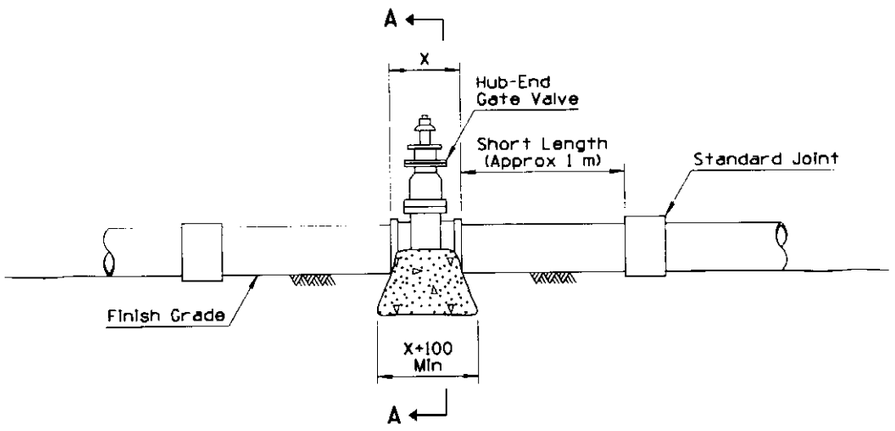

ELEVATION

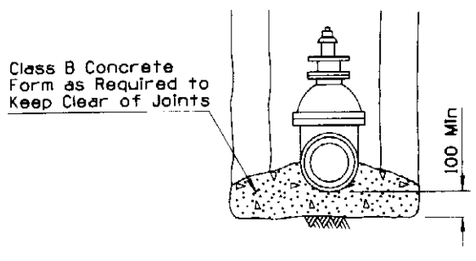

SECTION A-A
GATE VALVE

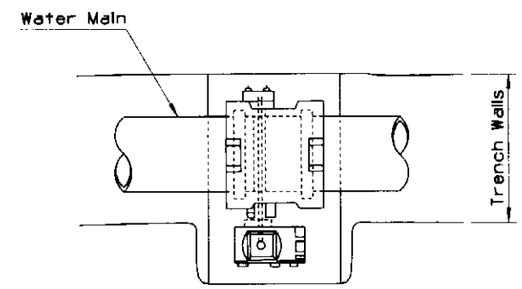

PLAN

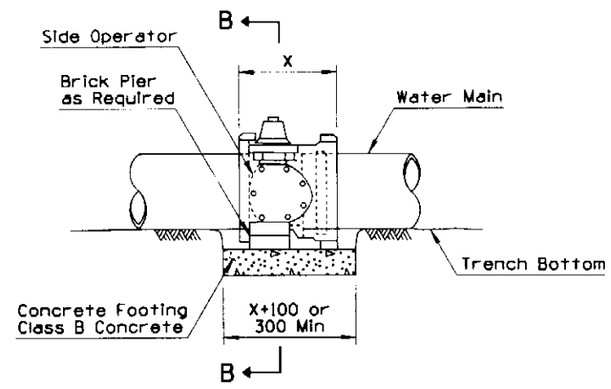

ELEVATION

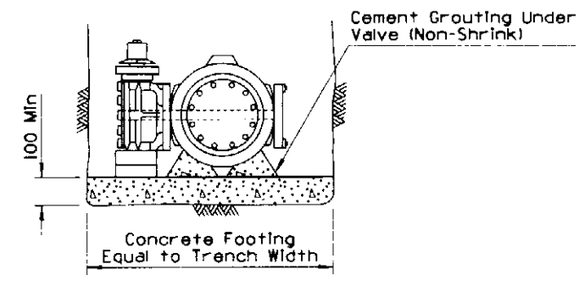

SECTION B-B
BUTTERFLY VALVE

GENERAL NOTES

1. Gate valves 100 to 400 mm may be used with any type of pipe.
2. Gate valves larger than 400 mm to be detailed on plans.
3. Butterfly valves 75 to 300 mm may be used with any type of pipe.
4. Butterfly valves larger than 300 mm to be detailed on plans.
5. Valve box and cover required per Std C-23.30.

DESIGN APPROVED	STATE OF ARIZONA DEPARTMENT OF TRANSPORTATION DIVISION OF HIGHWAYS STANDARD DRAWINGS	ISSUE 6/95
APPROVED FOR DISTRIBUTION	BLOCKING FOR WATER VALVES GATE AND BUTTERFLY	DRAWING NO. C-23.15

Metric

NO	DESCRIPTION OF REVISIONS	MADE BY	DATE

Metric

GENERAL NOTES

1. Either this detail or restraint rods may be used when allowed to relocate a water line upward to cross over a conflict.
2. Ductile iron pipe may be used.
3. Anchor blocks for pipe larger than 300 mm shall be calculated for each project.
4. Reinforcing bars to be coated with 2 coats of coal tar, epoxy, or by other approved methods.

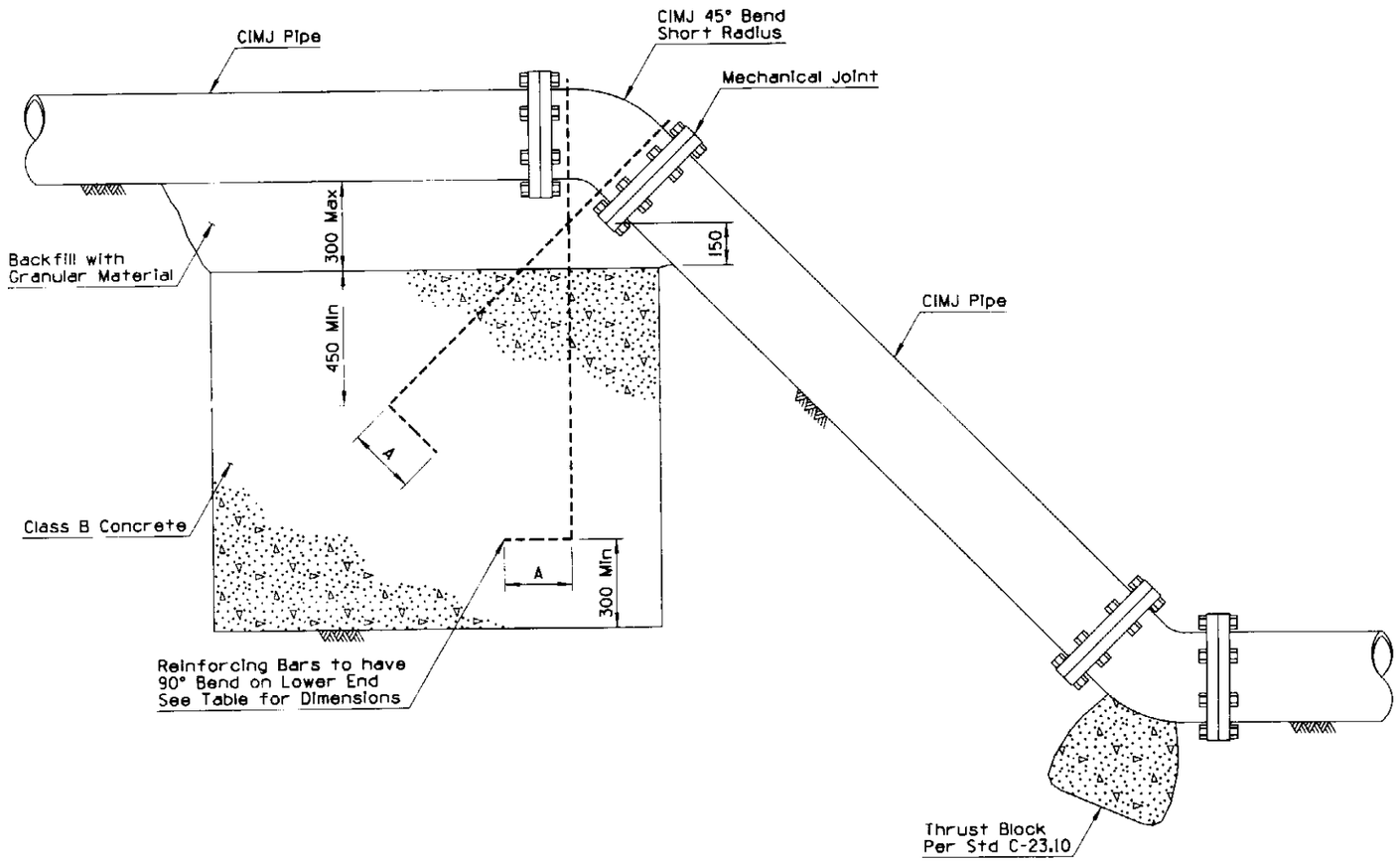

PIPE SIZE	MINIMUM BAR SIZE	A-DIMENSION (HOOK)	MINIMUM * BLOCK DIMENSION
150 mm	20M	150 mm	900x900x900
200 mm	20M	225 mm	1200x1200x750
300 mm	25M	225 mm	1200x1500x1500

* For 861 kPa Working Pressure

DESIGN APPROVED Terry H. Otterness	STATE OF ARIZONA DEPARTMENT OF TRANSPORTATION DIVISION OF HIGHWAYS STANDARD DRAWINGS	ISSUE 6/95
APPROVED FOR DISTRIBUTION Ronald A. Williams	ANCHOR BLOCK FOR VERTICAL BENDS	DRAWING NO. C-23.20

Metric

NO	DESCRIPTION OF REVISIONS	MADE BY	DATE
1			
2			
3			
4			

Metric

GENERAL NOTES

1. This detail covers moving of water mains, 50 to 300 mm only.
2. Thrust blocking per Std C-23.10 and C-23.20.
3. If offset is to go over obstruction, joint restraints must be used.
4. Pipe is to be cast iron or ductile iron.
5. 45° cast iron bends may be used in place of cast iron offsets.
6. Drop section is to be prefabricated and installed as a single unit for cast iron mechanical joints.

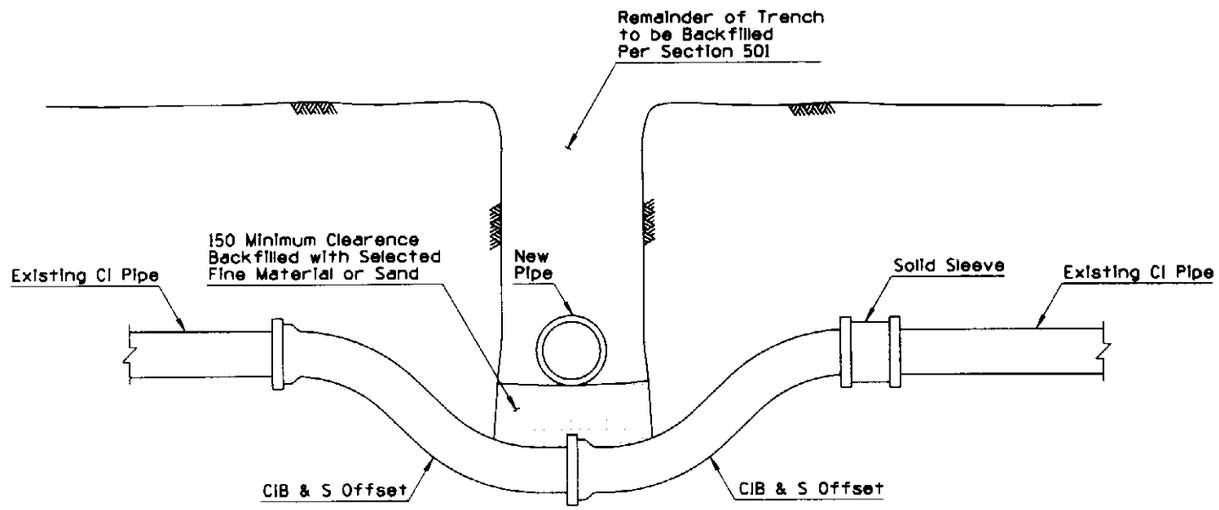

CAST IRON

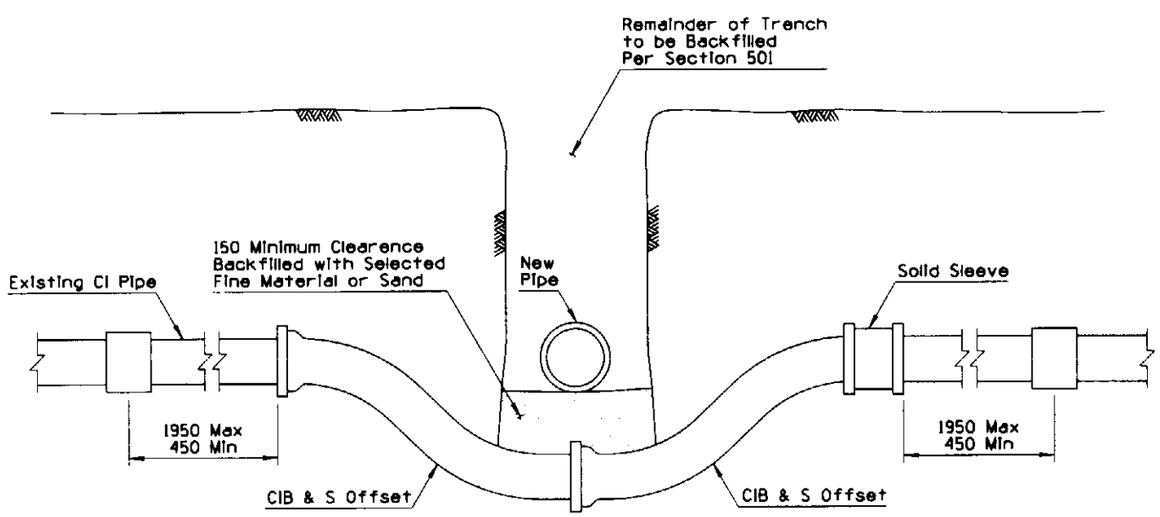

ASBESTOS CEMENT

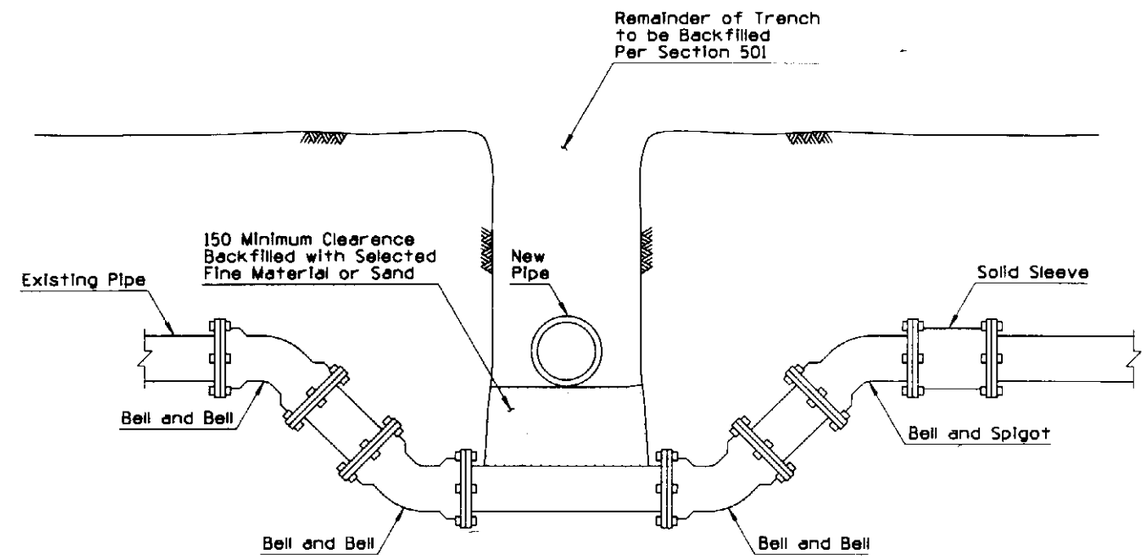

CAST IRON
MECHANICAL JOINT

DESIGN APPROVED Henry H. Otterness	STATE OF ARIZONA DEPARTMENT OF TRANSPORTATION DIVISION OF HIGHWAYS STANDARD DRAWINGS	ISSUE 6/95
APPROVED FOR DISTRIBUTION Ronald A. Williams	VERTICAL REALIGNMENT OF WATER MAINS	DRAWING NO. C-23.25

Metric

NO	DESCRIPTION OF REVISIONS	MADE BY	DATE
1			
2			
3			
4			

Metric

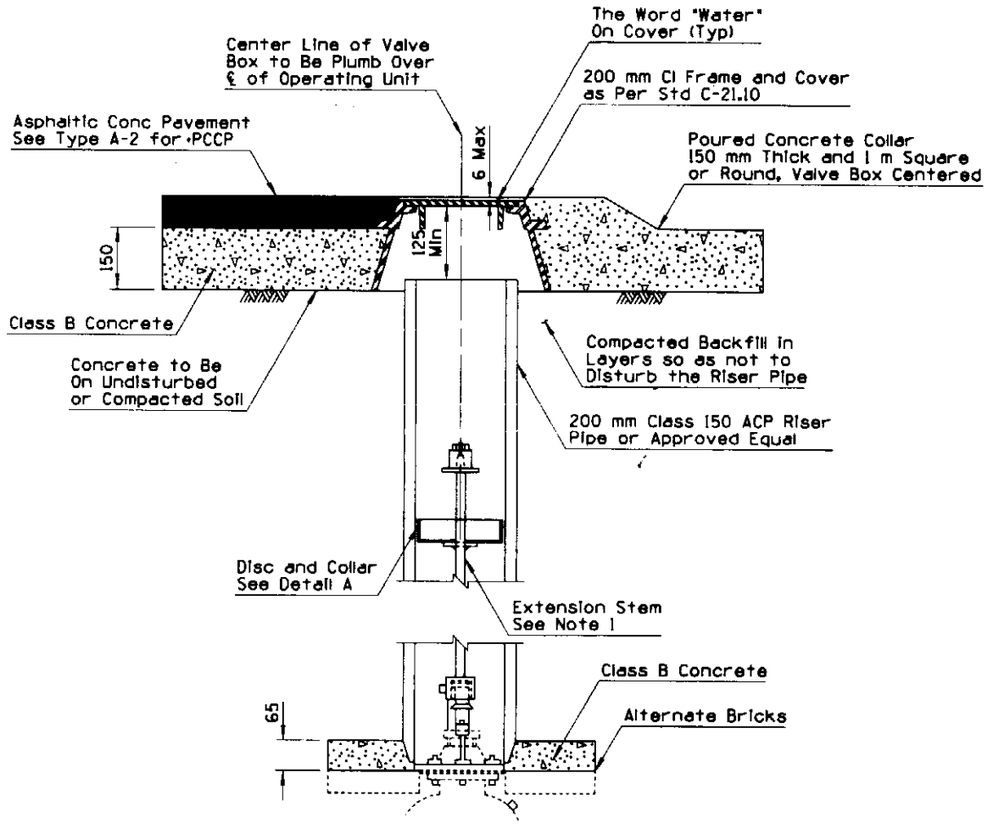

TYPE A-1

TO BE USED IN AREAS SUBJECT TO VEHICULAR TRAFFIC

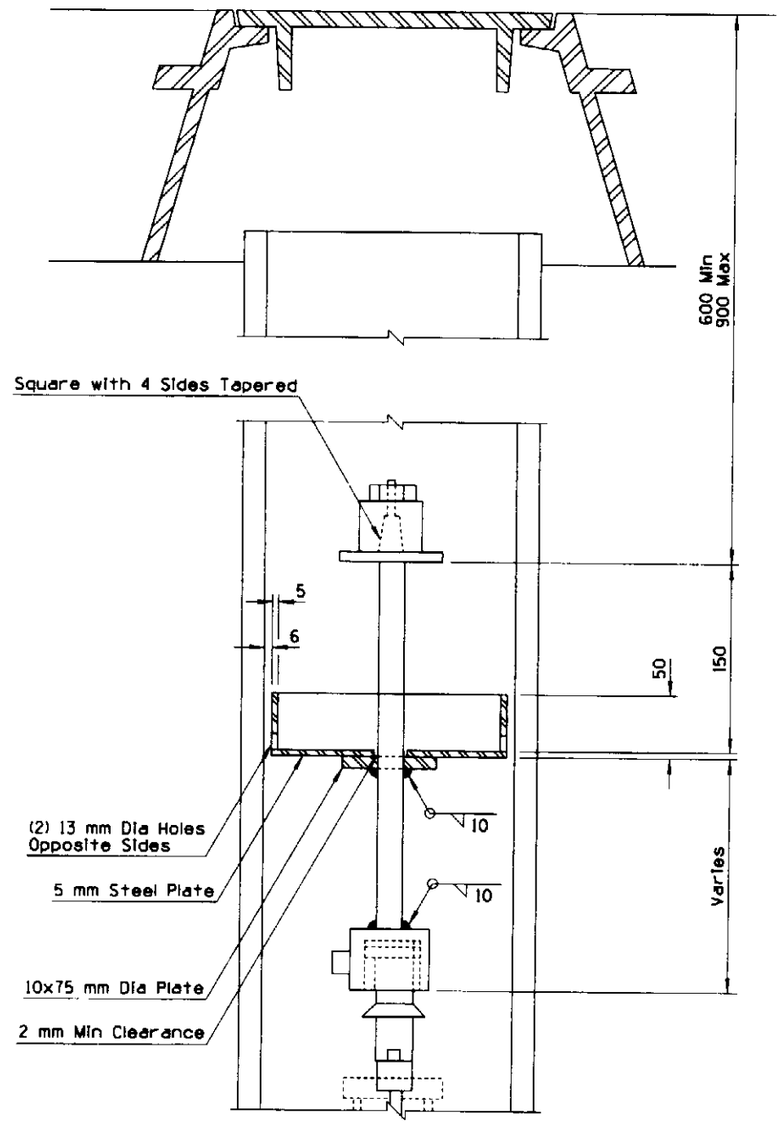

DETAIL A

GENERAL NOTES

1. Extension to valve stems required on all valves where operating nut is over 1.5 m below surface. Extension stem shall be 31 mm minimum diameter steel designation A-15, with square socket on bottom to fit 50 mm square valve nut. Length to fit each installation. 50 mm square operating nut to be held on top of the extension stem with stop nut.
2. If two or more joints of ACP are used to make riser, use standard AC pipe rubber gasket coupling to join pipe. Where riser pipe length exceeds 3 m, use 300 mm AC pipe.
3. All steel to have prime coat of paint No. 4 and one heavy application (finish coat) of Light Grey Enamel paint as per section 1002-4.06.
4. Valve box shall be adjusted to the finished grade prior to the placing of the asphaltic concrete surface or PCCP.
5. Ground below the concrete pad or three bricks to be compacted to 95% of the maximum density.
6. Use Parkson, Tyler Apco, or equal deep skirted cover (100 mm or more) type, sliding adjustable cast iron valve box, CI minimum TS 210 Mpa.

DESIGN APPROVED Terry H Otterness	STATE OF ARIZONA DEPARTMENT OF TRANSPORTATION DIVISION OF HIGHWAYS STANDARD DRAWINGS	ISSUE 6/95
APPROVED FOR DISTRIBUTION Ronald A Williams	VALVE BOX INSTALLATION	DRAWING NO. C-23.30 Sheet 1 of 2

Metric

NO	DESCRIPTION OF REVISIONS	MADE BY	DATE

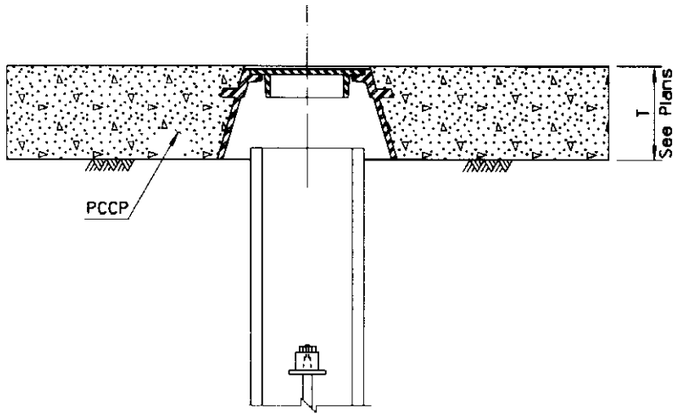

TYPE A-2
TO BE USED WHEN VALVE BOX IS LOCATED WITHIN PCCP PAVEMENT

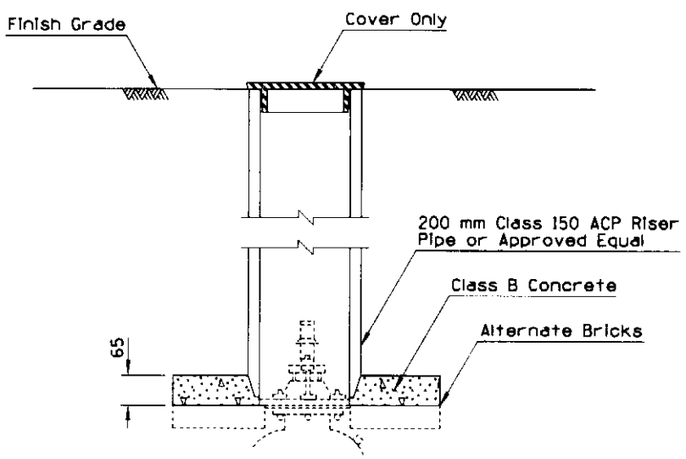

TYPE B
NOT SUBJECT TO VEHICULAR TRAFFIC

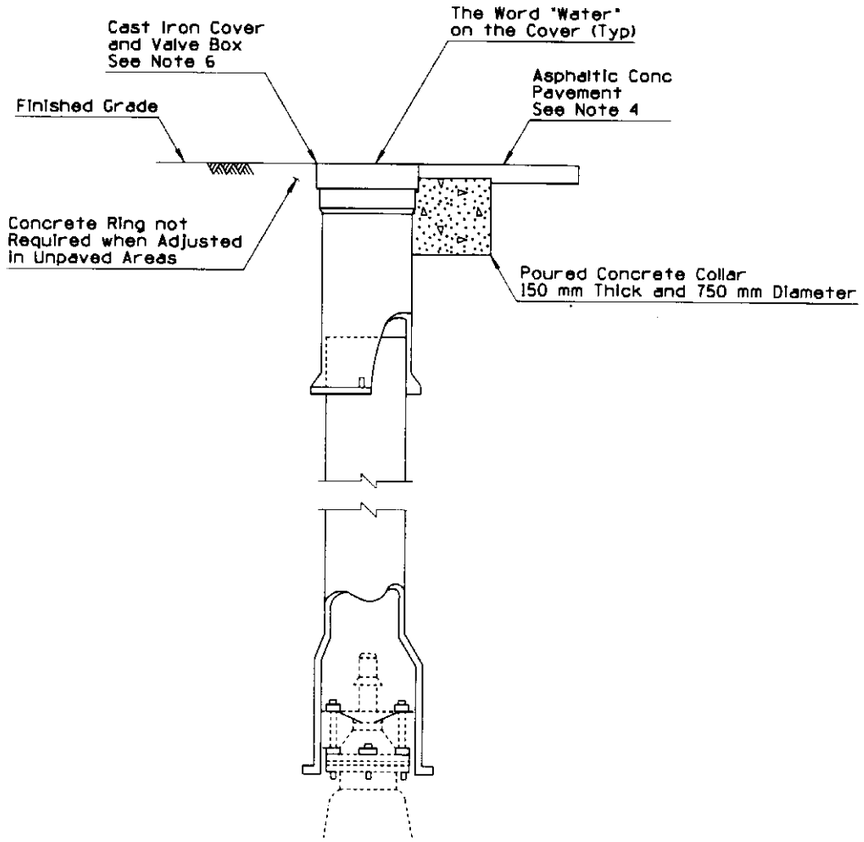

TYPE C

DESIGN APPROVED Jerry H. Otterness	STATE OF ARIZONA DEPARTMENT OF TRANSPORTATION DIVISION OF HIGHWAYS STANDARD DRAWINGS	ISSUE 6/95
APPROVED FOR DISTRIBUTION Ronald A. Williams	VALVE BOX INSTALLATION	DRAWING NO. C-23.30 Sheet 2 of 2

NO	DESCRIPTION OF REVISIONS	MADE BY	DATE
1			
2			
3			
4			

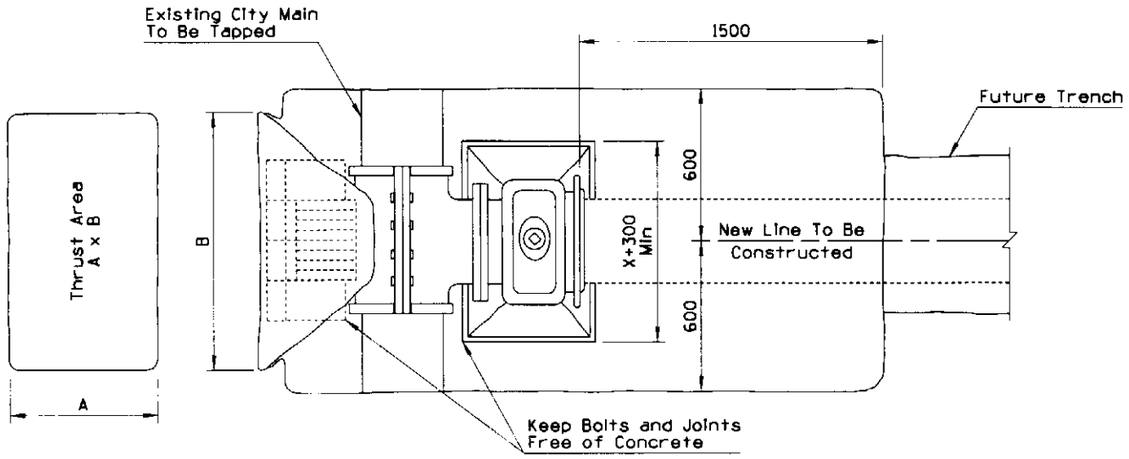

PLAN

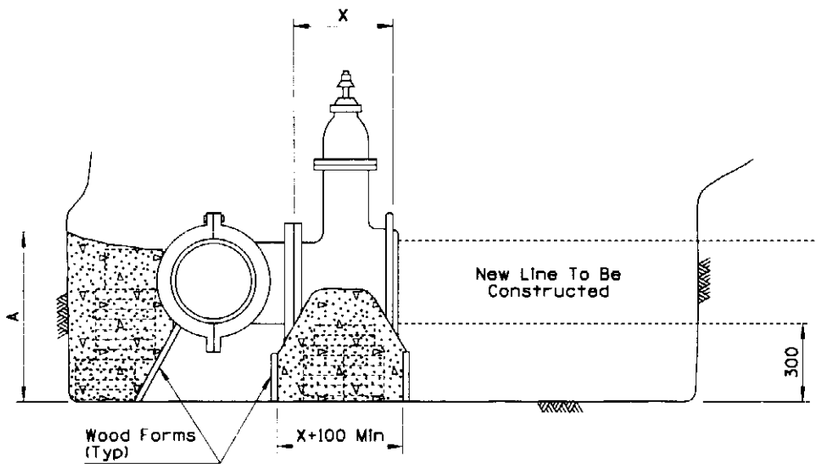

ELEVATION

GENERAL NOTES

1. Thrust blocks are to extend to undisturbed ground.
2. Optional blocking of 50x200x300 mm solid concrete masonry units may be used as indicated.
3. All concrete shall be class B normally, cure 24 hours before backfilling, or use high, early strength concrete.
4. All taps shall be made by city crews at prevailing rates.
5. Install permanent blocking under valve before tap is made. All flange bolts shall be clear of footing.
6. All tapping sleeves must be pressure tested prior to request for tap by city.
7. Contractor shall excavate as shown and shall set tapping sleeve and valve, and tighten all bolts prior to requesting city to make tap.
8. Tapping sleeve to be placed a minimum of 450 mm from any bell, coupling, valve, or other obstruction.
9. Areas for pipe larger than 400 mm shall be calculated for each project.

SIZE OF PIPE BEING CONNECTED	MINIMUM THRUST AREA REQUIRED EQUALS (A x B)
100 mm & LESS	0.28 m^2
150 mm	0.37 m^2
200 mm	0.56 m^2
250 mm	0.84 m^2
300 mm	1.21 m^2
400 mm	2.14 m^2

DESIGN APPROVED Terry H. Otterness	STATE OF ARIZONA DEPARTMENT OF TRANSPORTATION DIVISION OF HIGHWAYS STANDARD DRAWINGS	ISSUE 6/95
APPROVED FOR DISTRIBUTION Ronald A. Williams	TAPPING SLEEVE AND VALVE INSTALLATION	DRAWING NO. C-23.35

NO	DESCRIPTION OF REVISIONS	MADE BY	DATE
1			
2			
3			
4			

Metric

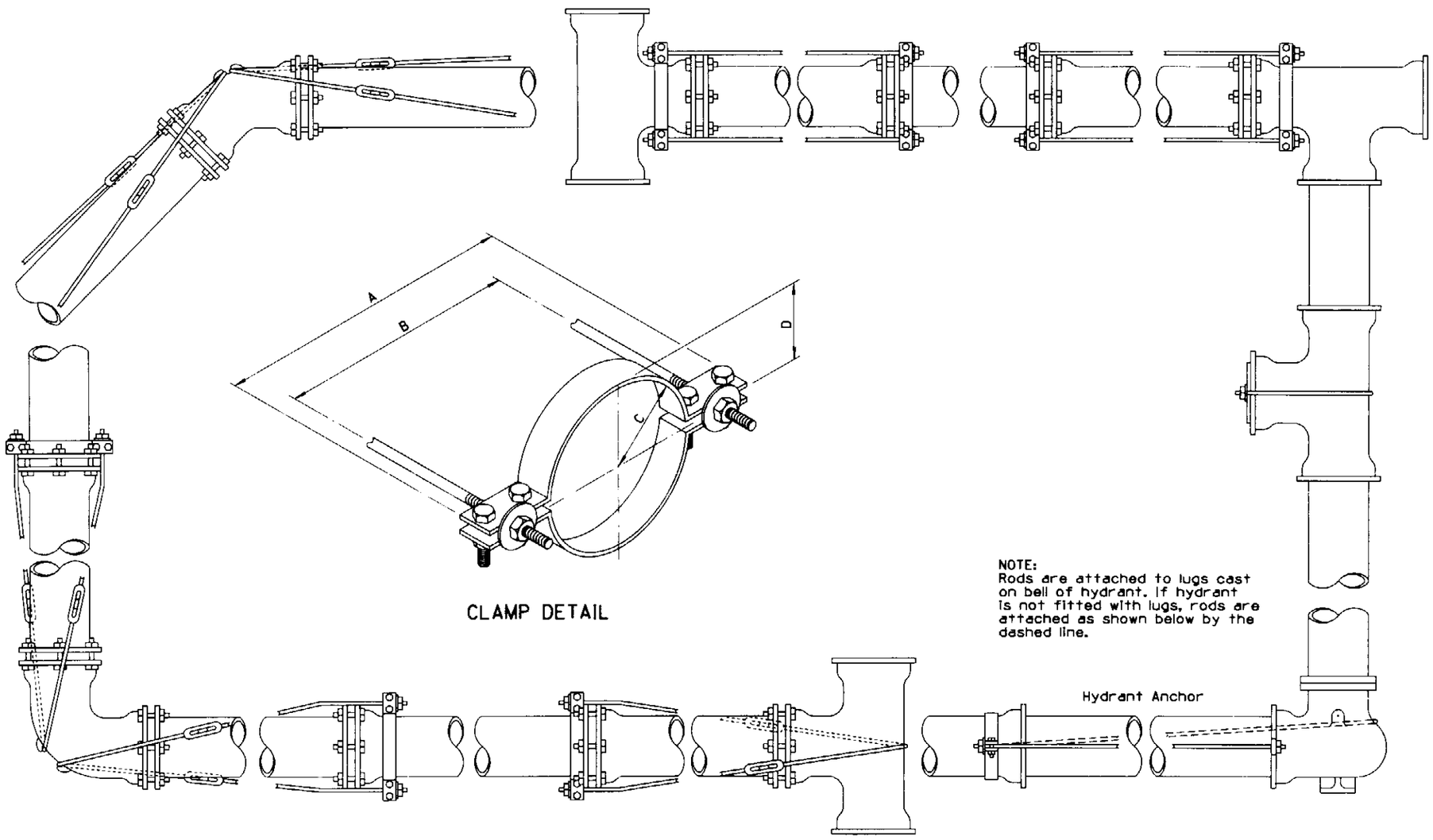

GENERAL NOTES

1. This detail is for use only on underground installations where the use of concrete thrust blocking per Std C-23.10 cannot be used because of obstructions, or requirements of the specifications.
2. Washers may be cast iron or steel, and may be round or square. Holes shall be 3 mm larger than the rods.
3. All tie rods, rod couplings, turnbuckles, bolts and nuts for these joints shall be of carbon steel equivalant to ASTM A-307, grade B, with cadmium plating in accordance with ASTM B 766, except that the minimum thickness of the plating shall be 0.005 mm. Cadmium plated bolts shall have class 2A threads and the nuts, rod couplings and turnbuckles shall have 2B threads.
4. High strength, heat treated cast iron tee-head bolts with hexagon nuts, all in accordance with the strength requirements of AWWA C-111, may be used in lieu of the cadmium plated bolts and nuts.
5. The sketches in this series of figures show acceptable methods of providing anchorage. There is no particular significance to be attached to whether the sketch shows a bell and spigot joint or a standard mechanical joint. The anchoring procedure illustrated applies in most cases to either type of joint. In some cases, dimensions of the particular pipe or hub and space available for working around the particular joint will influence the choice of methods used.
6. In certain assemblies of rod and clamps shown, rods run from a lug on the fitting (or a clamp behind the hub of a bell) to a clamp against a face of a bell. Note that this arrangement anchors only one joint. The stability of the joint where the clamp is against the face of the bell depends on having soil above a relatively long piece of pipe on both sides of the joint. Consequently, if the distance between the first and the second joint is less than 3.6 m, the second joint shown shall be anchored by a clamp behind the hub of the bell and rods to a clamp at the face of the next bell.
7. For pipe larger than 300 mm diameter, restraint details shall be submitted for approval prior to installation.
8. All exposed metal shall be coated with asphaltic primer per subsection 907-2.02.
9. Bolt holes in clamps shall be 2 mm larger than the bolts.

PIPE SIZE	A	B	C	D	CLAMP	ROD	BOLTS	WASHERS	
								CAST IRON	STEEL
100	318	257	64	44	13x51	19	16	16x76	13x76
150	368	308	90	71	13x51	19	16	16x76	13x76
200	425	365	118	99	16x64	19	16	16x76	13x76
250	484	424	146	127	16x64	22	19	16x76	13x76
300	567	487	171	149	16x76	22	22	19x89	13x89

DESIGN APPROVED
Henry H. Otterness

APPROVED FOR DISTRIBUTION
Ronald C. Williams

STATE OF ARIZONA
DEPARTMENT OF TRANSPORTATION
DIVISION OF HIGHWAYS
STANDARD DRAWINGS

JOINT RESTRAINT WITH TIE RODS

ISSUE 6/95

DRAWING NO. C-23.40

Metric

NO	DESCRIPTION OF REVISIONS	MADE BY	DATE
3			
2			
1			
0			

Metric

GENERAL NOTES

1. The meter boxes shall conform to the dimensions as shown and shall be made of portland cement concrete poured and tamped (or vibrated) in true forms.
2. Use Class S concrete, f'_c=30 Mpa.

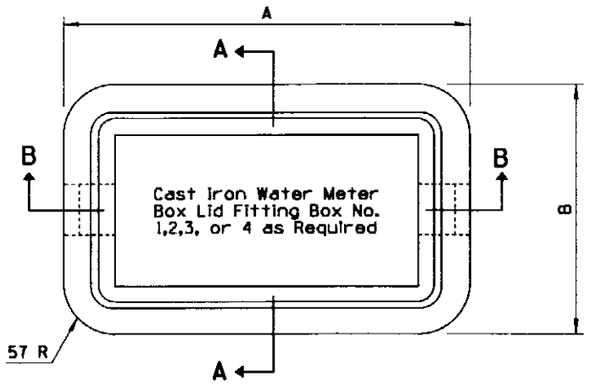

PLAN

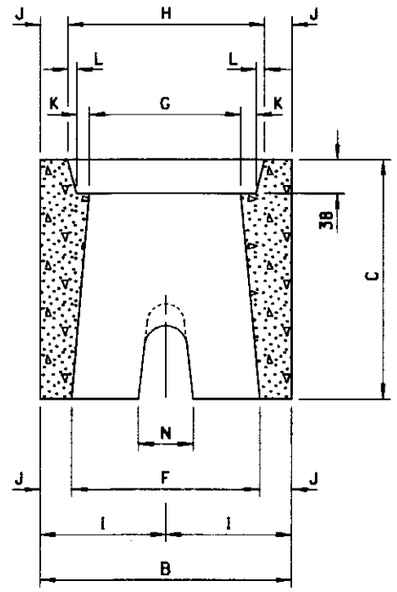

SECTION A-A

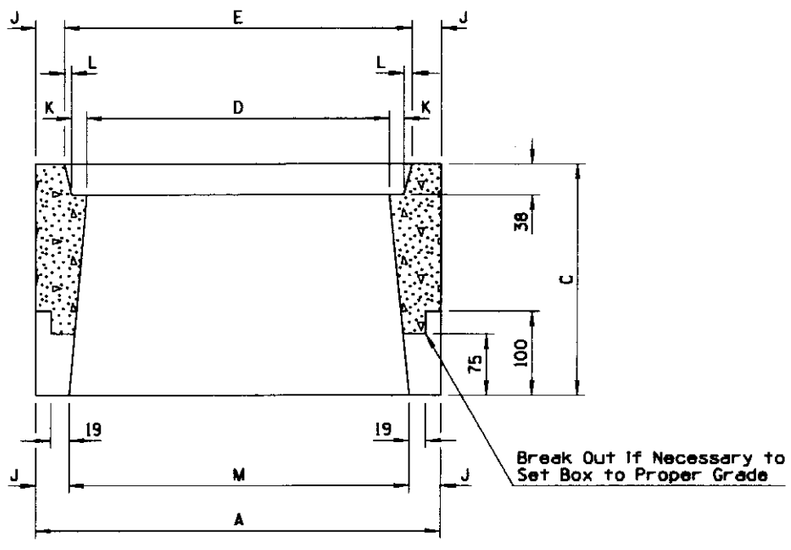

SECTION B-B

METER BOX DIMENSIONS				
	BOX NUMBER			
DIM.	1	2	3	4
A	483	622	749	851
B	305	425	470	578
C	279	305	330	305
D	356	483	603	705
E	406	559	673	775
F	229	337	381	502
G	178	286	324	432
H	229	362	394	502
I	152	213	235	289
J	38	44	44	38
K	19	29	25	25
L	6	10	10	10
M	406	533	648	775
N	64	89	102	102
	16 OR 19 mm METER	25 mm METER	38 mm METER	50 mm METER

DESIGN APPROVED Jerry H. Ottemas	STATE OF ARIZONA DEPARTMENT OF TRANSPORTATION DIVISION OF HIGHWAYS STANDARD DRAWINGS	ISSUE 6/95
APPROVED FOR DISTRIBUTION Ronald C. Williams	CONCRETE WATER METER BOX	DRAWING NO. C-23.45

Metric

NO	DESCRIPTION OF REVISIONS	MADE BY	DATE

Metric

GENERAL NOTES

1. All steel per section 1004-1 and 1004-2.

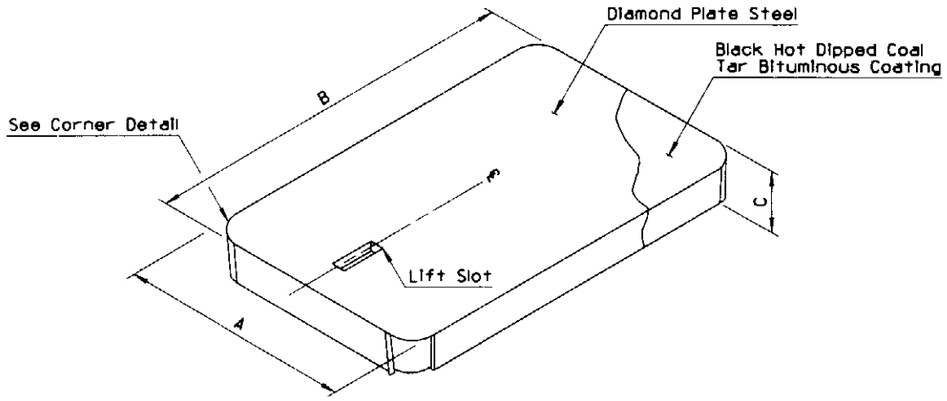

PERSPECTIVE

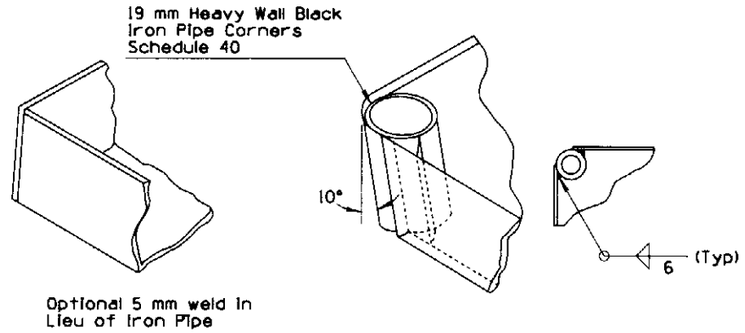

CORNER DETAIL

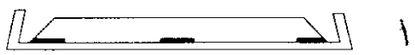

SECTION A-A

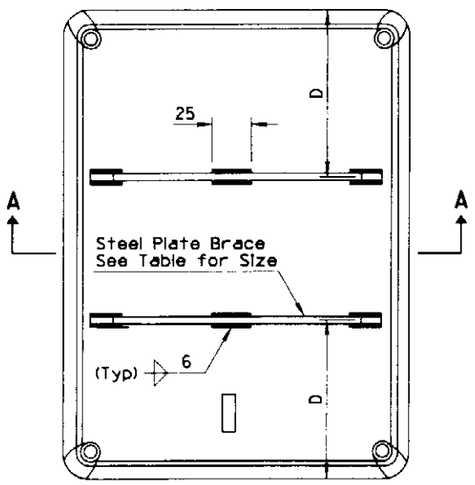

DETAIL 1

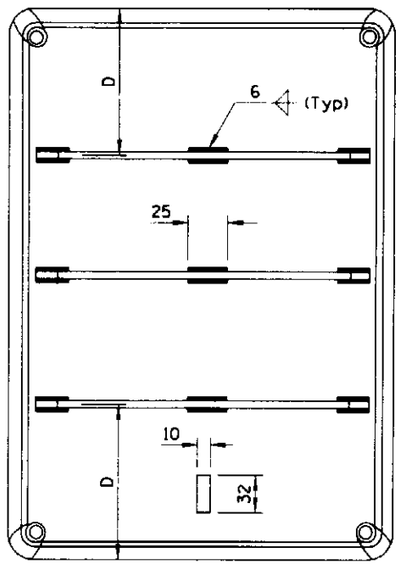

DETAIL 2

SPECIFICATIONS								
NO	A	B	C	D	STEEL PLATE BRACE		WEIGHT	THICKNESS
1	229	403	35	None	None	None	2.4 kg	1.90 mm
2	359	552	38	165	5x32x333	Detail 1	5.8 kg	2.66 mm
3	387	667	38	210	5x32x362	Detail 1	8.7 kg	2.66 mm
4	495	762	38	181	5x32x476	Detail 2	15.0 kg	3.04 mm

DESIGN APPROVED	STATE OF ARIZONA DEPARTMENT OF TRANSPORTATION DIVISION OF HIGHWAYS STANDARD DRAWINGS	ISSUE 6/95
APPROVED FOR DISTRIBUTION	STEEL COVER FOR WATER METER BOX	DRAWING NO. C-23.50

Metric

NO	DESCRIPTION OF REVISIONS	MADE BY	DATE

Metric

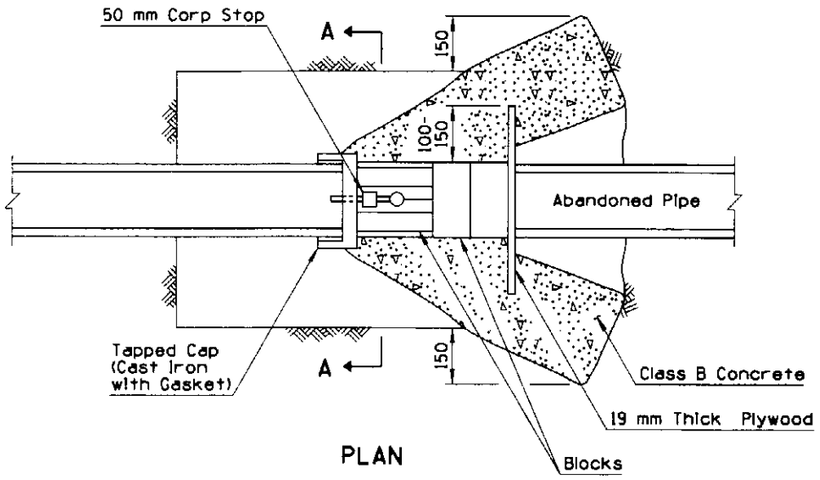

PLAN

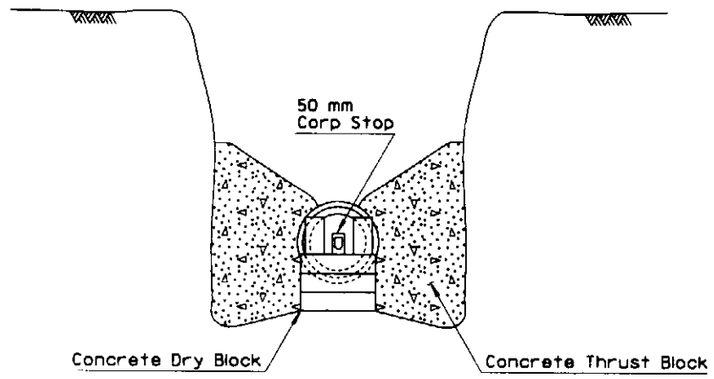

SECTION A-A

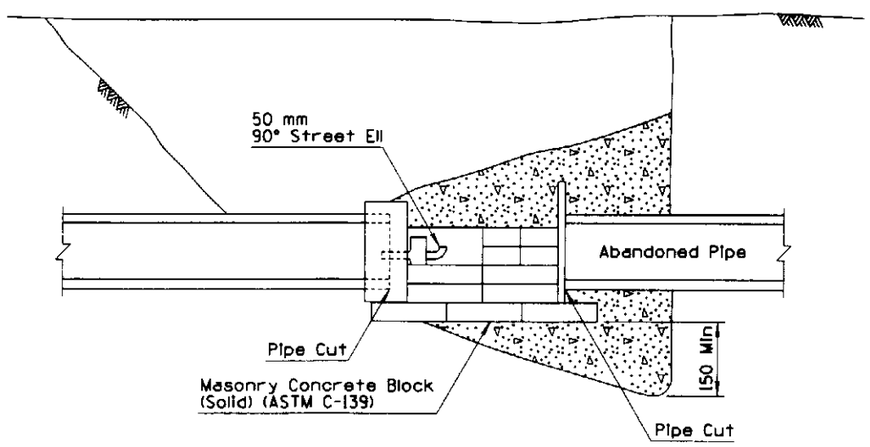

ELEVATION

GENERAL NOTES

1. Cut and plugs must be adequately "dry blocked".
2. Dry blocks shall be standard size solid masonry concrete blocks. (ASTM C-139).
3. The quantity and arrangement of the blocking must withstand the line pressure by holding the cap or plug in position.
4. Concrete thrust blocks shall not be poured until line pressure is restored and the cap or plug is inspected for leakage.
5. Concrete shall not be poured over any portion of the abandoned pipe.
6. Minimum thrust block area per Std C-23.10.
7. Where a 100 mm or larger line is specified to be abandoned, the cut and plug should occur at the supply line main to avoid creating an unused deadend line.

DESIGN APPROVED Henry H. Otterness	STATE OF ARIZONA DEPARTMENT OF TRANSPORTATION DIVISION OF HIGHWAYS STANDARD DRAWINGS	ISSUE 6/95
APPROVED FOR DISTRIBUTION Ronald Williams	WATERLINE CUT AND PLUG FOR 300 mm DIAMETER MAIN AND SMALLER	DRAWING NO. C-23.55

Metric

NO	DESCRIPTION OF REVISIONS	MADE BY	DATE
1			
2			
3			
4			

Metric

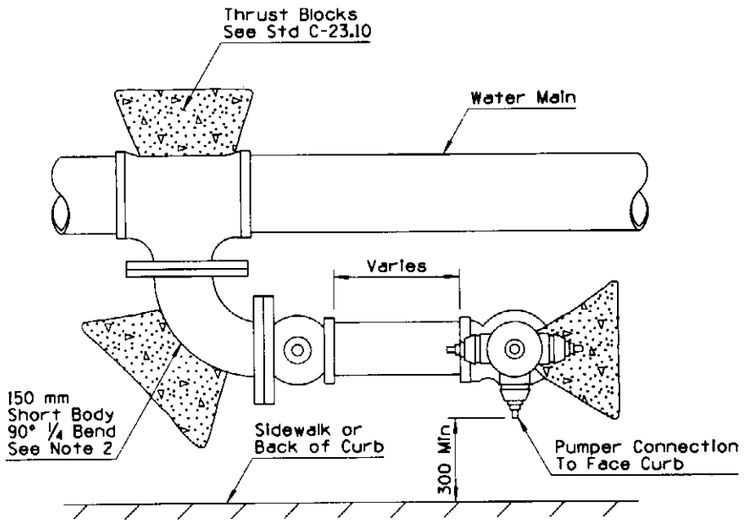

PLAN

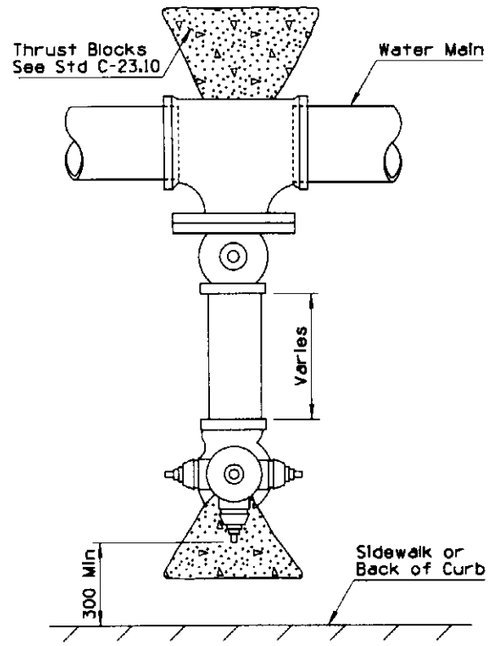

ALTERNATE PLAN
(SEE NOTE 3)

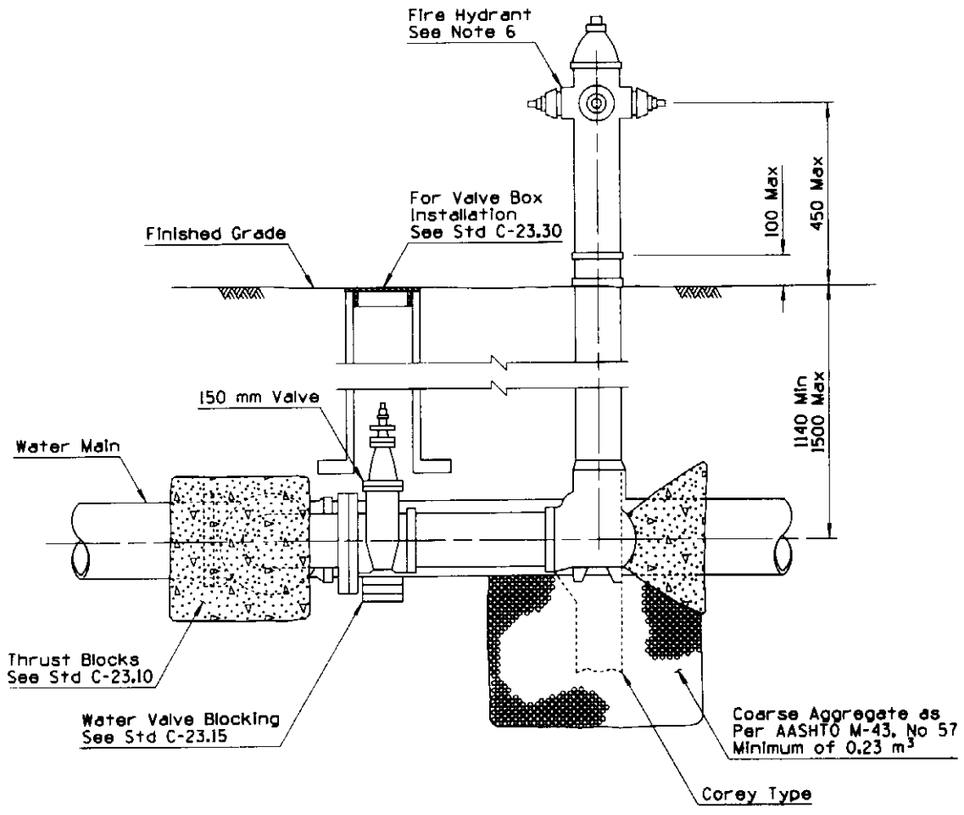

ELEVATION

GENERAL NOTES

1. All joints in hydrant run-out to be mechanical joints.
2. Hydrant Tee: Clow or approved equal may be used in place of Tee and 90° bend.
3. 90° bend not required if sufficient room for perpendicular installation.
4. See Std C-23.10 and C-23.15 for concrete thrust blocks
5. A flange by mechanical joint shutoff valve, connecting directly to the Tee or below at the main shall be used.
6. Fire hydrant, fire hydrant threads, valve and valve boxes per municipality requirements.

DESIGN APPROVED	STATE OF ARIZONA DEPARTMENT OF TRANSPORTATION DIVISION OF HIGHWAYS STANDARD DRAWINGS	ISSUE 6/95
APPROVED FOR DISTRIBUTION	HYDRANT INSTALLATION	DRAWING NO. C-23.60

Metric

NO	DESCRIPTION OF REVISIONS	MADE BY	DATE
1			
2			
3			
4			

Metric

GENERAL NOTES

1. Obstructions such as utility poles, street signs, irrigation boxes, fences, etc., must not be placed between curb and hydrant.
2. * Radius varies by municipality.
3. Dimensions shown on plans supersede locations shown on this detail.
4. On locations in midblock, the fire hydrant will be aligned with a property line.

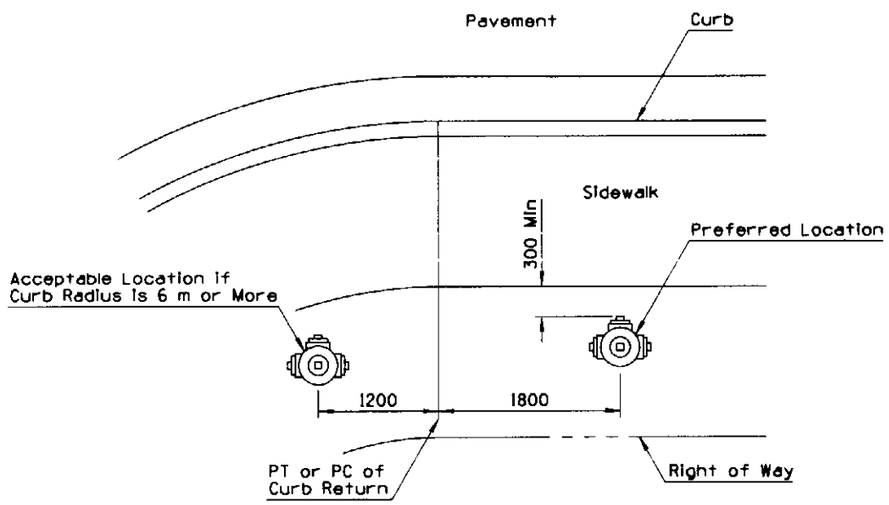

AREA WITH SIDEWALK

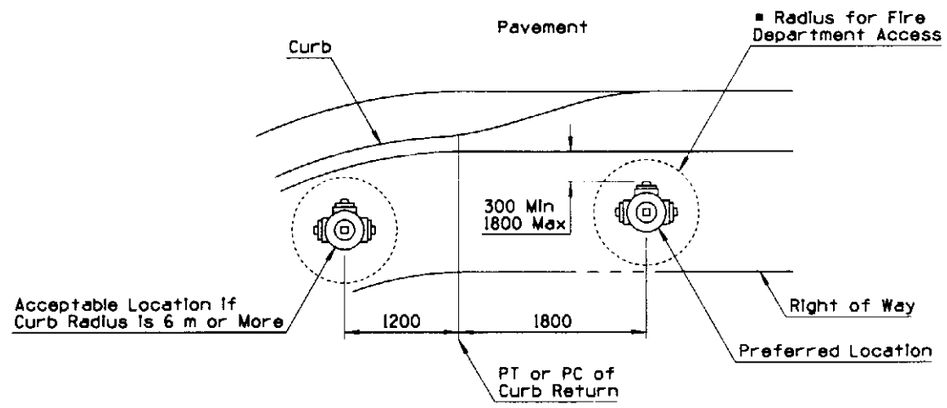

PARKWAY AREA OR NO SIDEWALK

DESIGN APPROVED	STATE OF ARIZONA DEPARTMENT OF TRANSPORTATION DIVISION OF HIGHWAYS STANDARD DRAWINGS	ISSUE 6/95
APPROVED FOR DISTRIBUTION	FIRE HYDRANT LOCATIONS	DRAWING NO. C-23.65

Metric