ARIZONA DEPARTMENT OF TRANSPORTATION
ROADWAY ENGINEERING GROUP
OFFICE MEMO

April 25, 1997

TO: All Users of Construction Standards

FROM: THO Terry H. Otterness, Design Program Manager, Roadway Engineering Group

RE: Revisions to Construction Standards - English Version

Several changes are being made to Construction Standard Drawings and the Construction Standards Index.

These revisions result from a Value Engineering Study on catch basins and affect Standards C-15.10 through C-15.81; Std. C-15.60 is deleted and Std. C-15.75 remains unchanged.

The Catch Basin Standards reflect significant changes including using only one type (EF) and size of grate and frame, placing the grate against the pavement edge to increase the amount of grate opening without encroaching into the pavement, changing the nose angle to a bent plate for curb opening catch basins to decrease and simplify forming, changing the access cover to the round cover used by the City of Phoenix, clarifying the use of catch basins with wide gutters, clarifying notes, and changing depth of wing walls to simplify forming. Revisions are indicated on each specific drawing.

Std. C-10.67 is a new standard for Concrete Median Barrier, Tall Type 'F', Cast in Place.

May, 1997

TO: ALL USERS OF THE CONSTRUCTION STANDARD DRAWINGS

FROM: THOMAS H. SCHECK, STANDARDS ENGINEER THO

RE: ERRATA SHEET - ENGLISH

ERRATA

The following revisions should be made to the Construction Standards dated July, 1994 (English). These revisions will remain in effect until new Standard Sheets are revised and distributed.

REVISED DRAWING	REVISION
C-05.20 Sheet 1	Only one expansion joint is required on each side of the driveway as shown on "DRIVEWAY WITH SIDEWALK ADJACENT TO CURB" these are the exterior joints, only. When the driveway is concrete, another expansion joint is needed along the backside of the sidewalk between the sidewalk and the driveway in all cases where the sidewalk crosses the driveway.
C-05.50	All references to "Class 2 AB" should be changed to read "Cement-Treated Slurry" on "SECTION B-B".
C-07.01 Sheet 1	Delete drawing "TRANSVERSE CONSTRUCTION JOINT, TC Joint Non-Skewed Joint". The drawing "TRANSVERSE CONSTRUCTION JOINT, TC Skewed Joint" shall apply to both skewed and non-skewed joints.
C-07.04	Under "GENERAL NOTES" change the "Minimum" to "Maximum" at "varies - 18' Minimum".
C-07.05	Under "GENERAL NOTES" change the "Minimum" to "Maximum" at "varies - 18' Minimum".
C-07.10	As shown on "CROSSROAD AT RAMP TERMINAL" delete the note "Expansion Joint Spacing (60' Max) (Typical)".

REVISED DRAWING	REVISION
C-10.22 Sheet 1	As shown on "SECTION" change the note on structural shape block to read "M14x17.2x14", M14x18x14" or W14x22x14" Structural Shape Block".
C-10.31 Sheet 2 and 3	As shown on "Guard Rail Transition (Timber Post)/(Steel Post) under "ELEVATION" delete the notes about "Rectangular Plate Washers". This type washer should not be used on these two large posts.
C-10.44 Sheet 1	Under "SOIL PLATE DETAIL" the reference to "3/4" Hole" change it to read "13/16" Hole".
C-10.45	Under "GENERAL NOTES" add this note as 5. - Bearing plate shall conform to ARTBA Standard F-41-79 except that the dimension from the bottom of the plate to the center of the hole shall be 2 1/4".
C-10.66	Under "GENERAL NOTES" in note 1. change "Half" to "Median".
C-13.10 Sheet 2of 2	Change note 1. to read "Minimum cover over pipe culverts shall be 12", measured from the top of pipe"
C-13.25	Do not use "TYPE 1, RIVITED OR BOLTED CONNECTIONS" or "TYPE 5, SLIP SEAM CONNECTIONS". This standard applies to both round or arch pipes, however only the round are shown. This drawing is still applicable for "L" on end sections.
C-13.30	Under "GENERAL NOTES" in note 7. change "Std. C-14.20" to "Std. B-11.12".
C-13.60	All references to "AB Class 2" should be changed to read "Cement-Treated Slurry" on "TYPE D & G CURB AND GUTTER WITH SLOTTED DRAIN" and "TYPE B OR C CURB AND GUTTER WITH SLOTTED DRAIN".

CONSTRUCTION STANDARD - INDEX

DRAWING NO.	TITLE
C-01.10	SYMBOL LEGEND
C-01.11	SYMBOL LEGEND
C-01.12	SYMBOL LEGEND
C-01.13	SYMBOL LEGEND
C-01.30	GENERAL ABBREVIATIONS
C-01.31	GENERAL ABBREVIATIONS
C-01.32	GENERAL ABBREVIATIONS
C-02.10	SLOPES, INTERSTATE
C-02.20	SLOPES, PRIMARY ROADWAYS
C-02.30	SLOPES, SECONDARY/MISC ROADWAYS
C-02.50	SUPERELEVATION DISTRIBUTION
C-03.10	DITCHES, CHANNELS, DIKES AND BERMS (5 SHEETS)
C-04.10	SPILLWAY, EMBANKMENT
C-04.20	DOWNDRAIN, EMBANKMENT
C-04.30	SPILLWAY LENGTH TABLE
C-04.40	DOWNDRAIN LENGTH TABLE
C-04.50	DOWNDRAIN ENERGY DISSIPATOR
C-05.10	SINGLE CURB, CURB & GUTTER EMBANKMENT CURB
C-05.11	RAMP CURB & GUTTER LAYOUT (2 SHEETS)
C-05.12	CURB & GUTTER TRANSITIONS (3 SHEETS)
C-05.20	CONCRETE DRIVEWAYS & SIDEWALKS (2 SHEETS)
C-05.30	SIDEWALK RAMP (4 SHEETS)
C-05.40	MEDIAN PAVING AND NOSE TRANSITION
C-05.50	CONCRETE BUS BAY
C-06.10	DRIVEWAY & TURNOUT LAYOUTS (2 SHEETS)
C-07.01	PCCP JOINTS (2 SHEETS)
C-07.02	LOAD TRANSFER DOWEL ASSEMBLY
C-07.03	MAINLINE PCCP JOINT LOCATIONS (8 SHEETS)
C-07.04	ENTRANCE RAMP PCCP JOINTS
C-07.05	EXIT RAMP PCCP JOINTS
C-07.06	TRENCH BACKFILL AND PAVEMENT REPLACEMENT
C-07.10	CROSSROAD PCCP JOINTS
C-08.10	RAMP GEOMETRICS
C-08.20	PAVED GORE AREA
C-09.10	GROOVING FOR BITUMINOUS SHOULDERS

DRAWING NO.	TITLE
C-10.01	TYPE A GUARD RAIL INSTALLATION, REFLECTOR TAB
C-10.02	TYPE B GUARD RAIL INSTALLATION, REFLECTOR TAB
C-10.03	MEASUREMENT LIMITS FOR W BEAM AND THRIE BEAM SYSTEM (2 SHEETS)
C-10.06	HALF BARRIER TERMINAL W/TYPE B OR C CURB & GUTTER
C-10.15	BARRIER DETAILS AT PIERS
C-10.20	G4(1W) AND G4(2W) BLOCKED OUT W BEAM (TIMBER POST)
C-10.21	G4(1S) AND G4(2S) BLOCKED OUT W BEAM (STEEL POST)
C-10.22	G4(MODIFIED) BLOCKED OUT W BEAM WITH SPECIAL CURB AND GUTTER (2 SHEETS)
C-10.23	G9(A) AND G9(B) BLOCKED OUT THRIE BEAM (STEEL POST)
C-10.24	G9(C) BLOCKED OUT THRIE BEAM (STEEL POST)
C-10.28	NESTED STEEL W BEAM (2 SHEETS)
C-10.29	BOLTED ANCHOR GUARD RAIL (2 SHEETS)
C-10.30	GUARD RAIL TRANSITION, W BEAM TO CONCRETE HALF BARRIER (APPROACH) (3 SHEETS)
C-10.31	GUARD RAIL TRANSITION, W BEAM TO CONCRETE HALF BARRIER (APPROACH) (WITH CURB) (3 SHEETS)
C-10.32	GUARD RAIL TRANSITION, W BEAM TO CONCRETE HALF BARRIER (DEPARTURE) (3 SHEETS)
C-10.39	HARDWARE FOR W BEAM TRANSITION TO CONCRETE BARRIER
C-10.40	GUARD RAIL EXTRUDER TERMINAL, GET-1 (2 SHEETS)
C-10.41	GUARD RAIL EXTRUDER TERMINAL, GET-2 (2 SHEETS)
C-10.44	HARDWARE FOR GUARD RAIL EXTRUDER TERMINAL (3 SHEETS)
C-10.45	GUARD RAIL ANCHOR ASSEMBLY STEEL TERMINAL POST
C-10.60	HALF BARRIER, CAST IN PLACE, SLIP FORM & FIXED FORM
C-10.61	HALF BARRIER, PRECAST
C-10.62	CONCRETE HALF BARRIER WITH GUTTER
C-10.64	HALF BARRIER (AT PIERS) (2 SHEETS)
C-10.65	HALF BARRIER WITH SIDEWALK
C-10.66	MEDIAN BARRIER, CAST IN PLACE, SLIP FORM & FIXED FORM
C-10.67	CONCRETE MEDIAN BARRIER, TALL TYPE 'F', CAST IN PLACE
C-10.68	MEDIAN BARRIER, PRECAST
C-10.70	CONCRETE HALF BARRIER TRANSITION (4 SHEETS)
C-10.71	CONCRETE HALF BARRIER TRANSITION (3 SHEETS)
C-10.74	HARDWARE FOR CONCRETE BARRIER TRANSITIONS
C-10.75	BARRIER TRANSITION-TANGENT-DEPARTURE TYPES 1, 2, AND 3 (3 SHEETS)
C-10.76	BARRIER TRANSITION-CURVE
C-10.80	RUB RAIL (2 SHEETS)
C-10.83	HARDWARE FOR RUB RAIL
C-10.97	GLARE SCREEN, CONCRETE MEDIAN BARRIER (3 SHEETS)
C-11.10	ROADWAY CATTLE GUARD (3 SHEETS)
C-11.20	CATTLE GUARD, DRAINAGE
C-11.30	CATTLE GUARD, RAILROAD
C-12.10	FENCE, WOVEN AND BARBED WIRE WITH GATES (5 SHEETS)
C-12.20	FENCE, CHAIN LINK TYPES 1 AND 2 WITH GATES (3 SHEETS)
C-12.30	CHAIN LINK CABLE BARRIER (3 SHEETS)

CONSTRUCTION STANDARD - INDEX

DRAWING NO.	TITLE
C-13.10	PIPE CULVERT INSTALLATION (2 SHEETS)
C-13.15	TYPICAL PIPE INSTALLATION
C-13.20	PIPE, REINFORCED CONCRETE END SECTION
C-13.25	PIPE, CORRUGATED METAL, END SECTION
C-13.30	PIPE & PIPE ARCH, CORRUGATED METAL CONCRETE INVERT PAVING
C-13.55	PIPE, CATTLE-VEHICLE PASS, MITERED END TREATMENT
C-13.60	SLOTTED DRAIN DETAILS
C-13.65	SLOTTED DRAIN INSTALLATION DETAILS
C-13.70	STORM DRAIN CONNECTION DETAILS
C-13.75	STORM DRAIN OUTLET DETAILS (2 SHEETS)
C-13.80	PIPE COLLAR DETAILS
C-15.10	CATCH BASIN, TYPE 1
C-15.20	CATCH BASIN, TYPE 3 (2 SHEETS)
C-15.30	CATCH BASIN, TYPE 4
C-15.40	CATCH BASIN, TYPE 5 (2 SHEETS)
C-15.50	CATCH BASIN, GRATES
C-15.60	DELETED
C-15.65	CATCH BASIN ACCESS, FRAME AND COVER DETAILS
C-15.70	CATCH BASIN MISC. DETAILS (2 SHEETS)
C-15.75	CATCH BASIN, DROP INLET
C-15.80	CATCH BASIN, MEDIAN FLUSH
C-15.81	CATCH BASIN, MEDIAN, SIDE SLOPE
C-15.90	CATCH BASIN, MEDIAN DIKE, PRECAST
C-15.91	FREEWAY CATCH BASIN DETAILS (2 SHEETS)
C-15.92	SPECIAL CATCH BASIN WITH HALF BARRIER
C-16.10	IRRIGATION HEADWALLS 18" TO 60" DIAMETER PIPES
C-16.20	IRRIGATION STANDPIPES
C-16.30	IRRIGATION VALVE AND GATE
C-16.40	IRRIGATION SLEEVES
C-17.10	BANK PROTECTION, RAIL TYPES 1, 2 & 3
C-17.20	BANK PROTECTION, RAIL TYPES 4, 5 & 6

DRAWING NO.	TITLE
C-18.10	MANHOLE DETAILS
C-18.20	MANHOLE FRAME & COVER DETAILS
C-18.30	MISCELLANEOUS MANHOLE DETAILS
C-18.40	MANHOLE RISER DETAILS
C-19.10	FORD - CONCRETE WALLS
C-19.20	FORDS - TYPES 1 & 2
C-21.10	SURVEY MONUMENT, FRAME AND COVER, RIGHT OF WAY MARKER
C-21.20	STANDARD MARKER
C-22.10	UTILITY LINE, PROTECTIVE CONCRETE SLAB
C-22.15	SANITARY SEWER ENCASEMENT
C-22.20	PIPE SUPPORT ACROSS TRENCHES (3 SHEETS)
C-22.25	PRECAST SANITARY SEWER MANHOLES
C-22.30	STUB OUT AND PLUG
C-22.35	DROP SEWER CONNECTIONS
C-22.40	SEWER CLEANOUT
C-23.10	THRUST BLOCKS FOR WATER LINES
C-23.15	BLOCKING FOR WATER VALVES GATE AND BUTTERFLY
C-23.20	ANCHOR BLOCK FOR VERTICAL BENDS
C-23.25	VERTICAL REALIGNMENT FOR WATER MAINS
C-23.30	VALVE BOX INSTALLATION (2 SHEETS)
C-23.35	TAPPING SLEEVE AND VALVE INSTALLATION
C-23.40	JOINT RESTRAINT WITH TIE RODS
C-23.45	CONCRETE WATER METER BOX
C-23.50	STEEL COVER FOR WATER METER BOX
C-23.55	WATERLINE-CUT AND PLUG 12" DIA. MAIN AND SMALLER
C-23.60	HYDRANT INSTALLATION
C-23.65	FIRE HYDRANT LOCATIONS

No.	Description of Revisions	Made by	Date
1			
2			
3			
4			

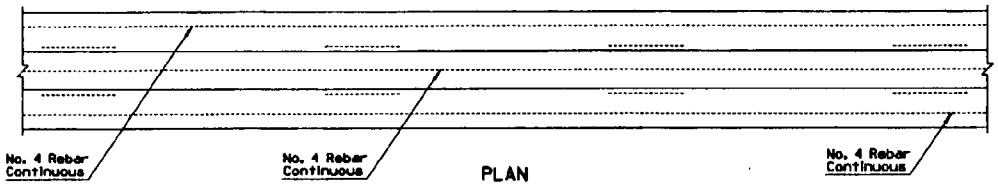

PLAN

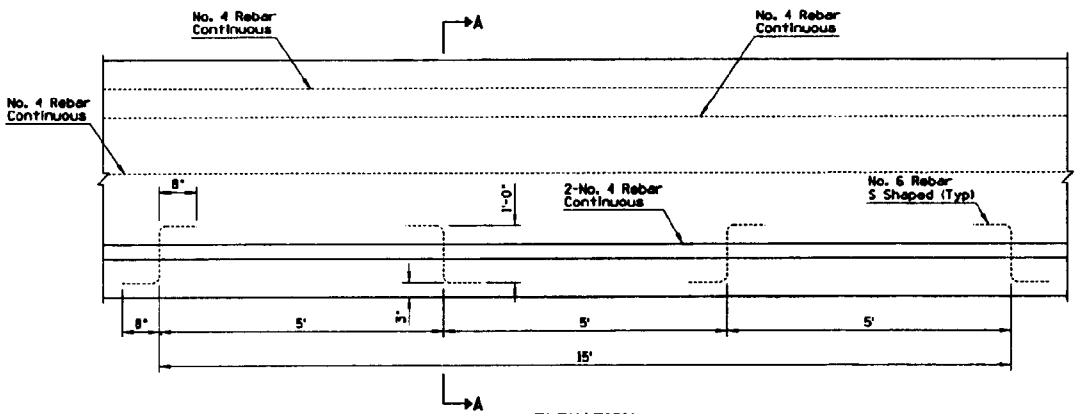

ELEVATION

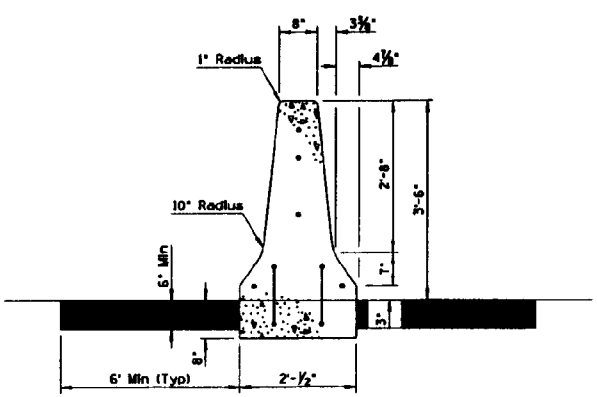

WITH AC PAVEMENT

SECTION A-A

GENERAL NOTES

1. Median Barrier shall be constructed by the slip form or by the formed Cast-in-Place method.
2. When obstacles are encountered which prevent the use of slip form equipment, the closure shall be accomplished by the use of stationary forms.
3. Concrete shall be Class S, design strength f_c =3000 PSI.
4. If the footing and barrier are cast monolithically, No. 6 S shaped rebars will not be required.
5. In no case shall the width of barrier exceed the width of the barrier footing or overhang the adjacent pavement.
6. No. 4 Rebar shall extend 12" past the construction joint at the completion of the day's pour.

▲ Depth to match adjacent PCCP thickness (8" Min).

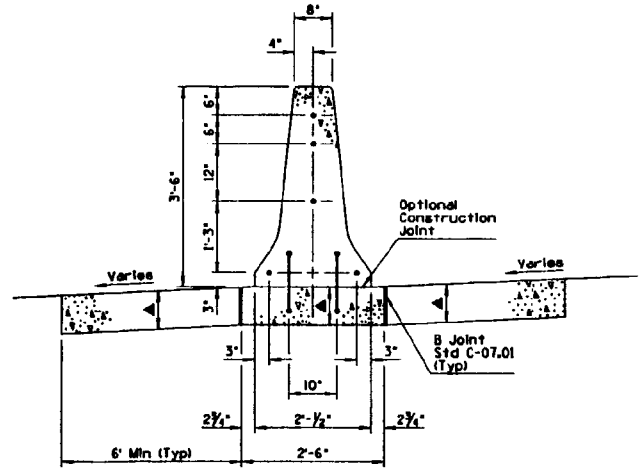

WITH PCC PAVEMENT

SECTION A-A

Design Approved	STATE OF ARIZONA DEPARTMENT OF TRANSPORTATION DIVISION OF HIGHWAYS STANDARD DRAWINGS	Issue 5/97
Approved for Distribution	CONCRETE MEDIAN BARRIER TALL TYPE "F" CAST IN PLACE	Drawing No. C-10.67

1	REVISED STD FOR NEW FRAME AND NOSE PLATE	PHB	5/97
2	REVISED DETAIL	PHB	5/97
3	REVISED PLANS FOR PAVING AFTER WALLS	PHB	5/97
4	ADDED DETAIL OR NOTE	PHB	5/97

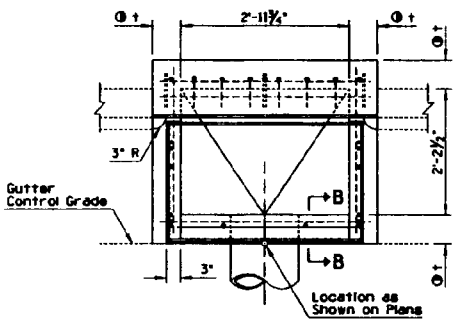

PLAN - CATCH BASIN TYPE I - SINGLE

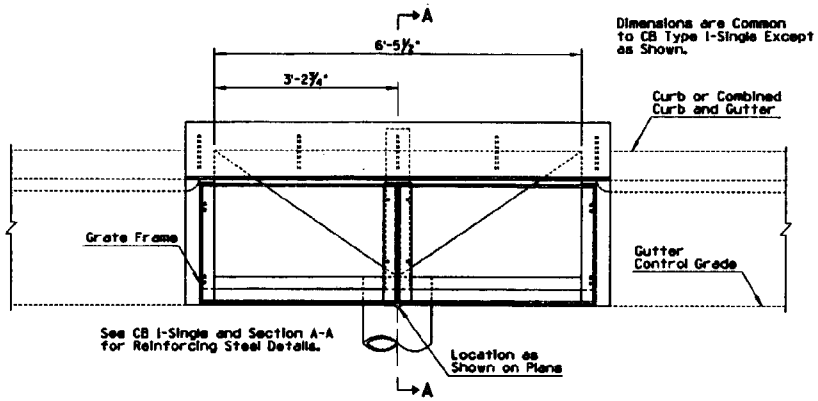

PLAN - CATCH BASIN TYPE I - DOUBLE

GENERAL NOTES

(4) 1. Catch basin used at roadway sag only.

2. Pipes can be placed in any wall.

3. Sump floor shall have a wood trowel finish and a minimum 4% slope in all directions to outlet.

4. All structural steel shall be ASTM A36.

5. Welding shall be in accordance with Standard Welding Specifications.

6. Grate, frame, beam and nose plate shall be given one shop coat of No. 1 paint.

7. All concrete shall be Class B.

8. Construction joints and drains shall be placed to meet field conditions. See Std C-15.70.

9. Any specified inlet depression shall be warped to opening according to Std C-15.70.

(4) 10. Silicone sealant shall be placed between the grate frame and PCCP, recessed ¼" from the pavement surface.

11. Curb opening areas, sq. ft., for type I-single and type I-double equal 0.25 and 0.54, respectively, for each inch of "h" + inlet depression - 2.35". See Std C-15.70.

12. See Std C-15.50 for grate and frame details and grate opening areas.

13. ◐t = 6" when H is 8' or less.
8" when H is greater than 8'.
See Section B-B.

■ = 9" when pavement is AC.
Match pavement thickness when pavement is PCCP.

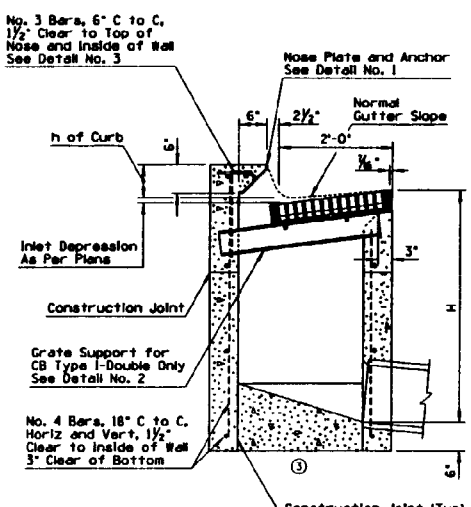

SECTION A-A

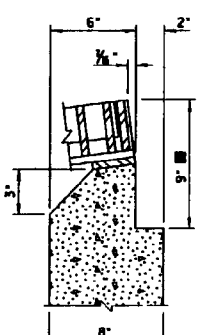

SECTION B-B

USE THIS SECTION WHEN t=8" ②

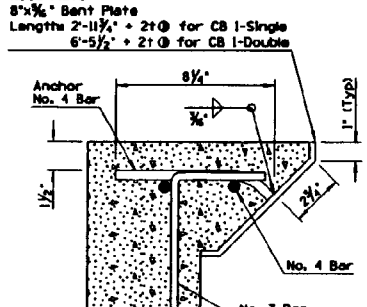

DETAIL NO. 1 ②

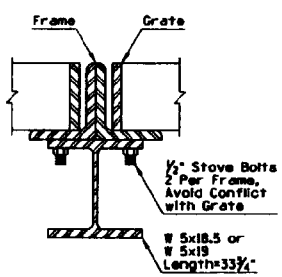

DETAIL NO. 2

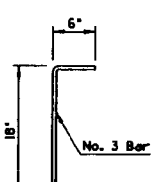

DETAIL NO. 3

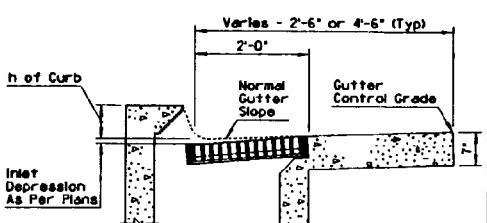

DETAIL NO. 4 ④

DESIGN APPROVED	STATE OF ARIZONA DEPARTMENT OF TRANSPORTATION DIVISION OF HIGHWAYS STANDARD DRAWINGS	REV. 5/97
APPROVED FOR DISTRIBUTION	① CATCH BASIN, TYPE I	DRAWING NO. C-15.10

NO	DESCRIPTION OF REVISIONS	MADE BY	DATE
1	REVISED STD FOR NEW ACCESS FRAME AND COVER	PHD	5/97
2	ADDED SHEETS FOR REVISED DETAILS	PHD	5/97
3	REVISED SECTION	PHD	5/97
4	REVISED LENGTHS OF WINGS	PHD	5/97
5	ADDED SECTION	PHD	5/97
6	COMBINATED NOTES	PHD	5/97
7	ADDED NOTE	PHD	5/97
8			

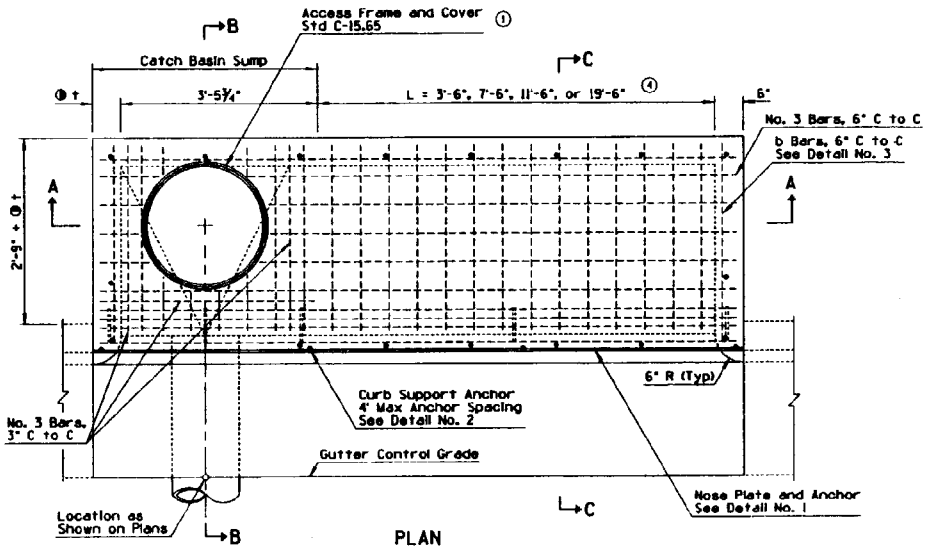

PLAN

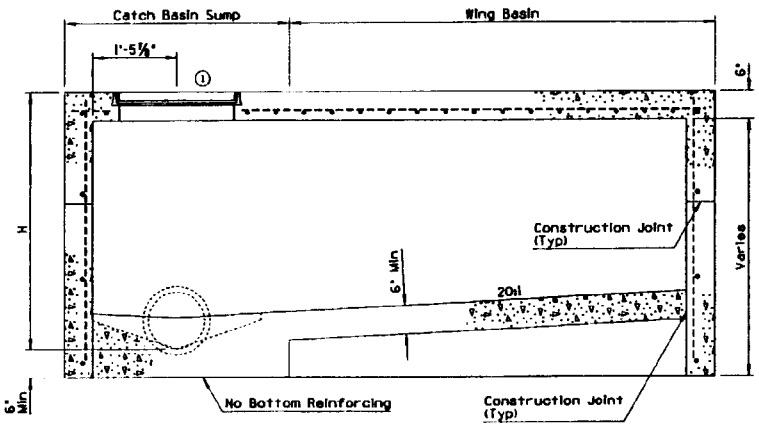

SECTION A-A
USE THIS SECTION WHEN H=5' OR LESS ③

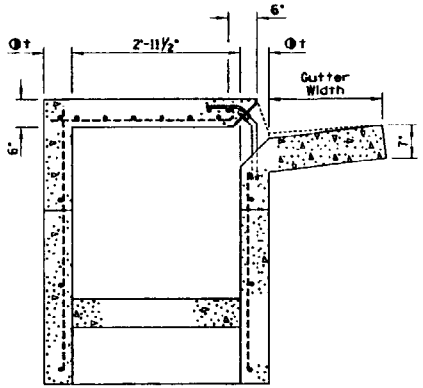

SECTION C-C ⑤

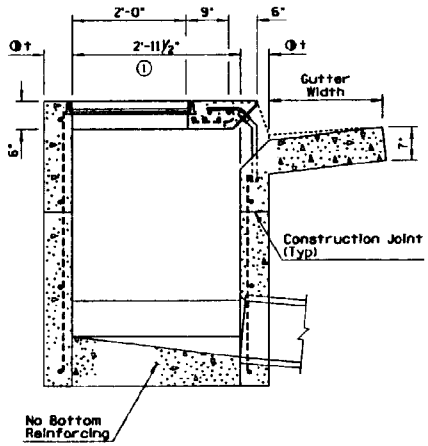

SECTION B-B ③

GENERAL NOTES

⑦ 1. Catch basin can be used on grade or at roadway sag.

⑥ 2. Catch basin has three configurations:
Sump Only-Sump portion of catch basin (See Detail No. 4).
Single Wing (Illustrated)-Sump with wing basin upstream.
Double Wing-Sump with symetrical wing basins each side.

3. Pipes can be placed in any wall except wall adjacent to wing basin.

4. Floor shall have a wood trowel finish. Slope of the sump portion of the catch basin along the axis of the pipe shall be 4:1.

5. Any specified inlet depression shall be warped to opening according to Std C-15.70.

6. All structural steel shall be ASTM A36.

7. Nose plate, access frame and cover shall be given one shop coat of No. 1 paint.

8. All concrete shall be Class B.

9. All reinforcing bars shall be #4, 1'-6" C to C both ways and 1½" clear to inside of walls and outside of wing basin floor except as shown.

10. Curb opening area (sq ft) per inch of curb "h" + gutter depression = curb opening length (ft) x 0.0833.

11. Welding shall be in accordance with Standard Welding Specifications.

12. Construction joints and drains shall be placed to meet field conditions. See Std C-15.70.

13. ⓓt = 6" when H is 8' or less.
8" when H is greater than 8'.

DESIGN APPROVED: Jerry H. Otterness	STATE OF ARIZONA DEPARTMENT OF TRANSPORTATION DIVISION OF HIGHWAYS STANDARD DRAWINGS	REV. 5/97
APPROVED FOR DISTRIBUTION: Ronald Wallin	① ② CATCH BASIN, TYPE 3	DRAWING NO. C-15.20 Sheet 1 of 2

DESCRIPTION OF REVISIONS	MADE BY	DATE

GENERAL NOTES

1. See sheet 1 of 2 for other dimensions, notes and reinforcing steel.
2. ⓓt = 6" when H is 8' or less.
   8" when H is greater than 8'.

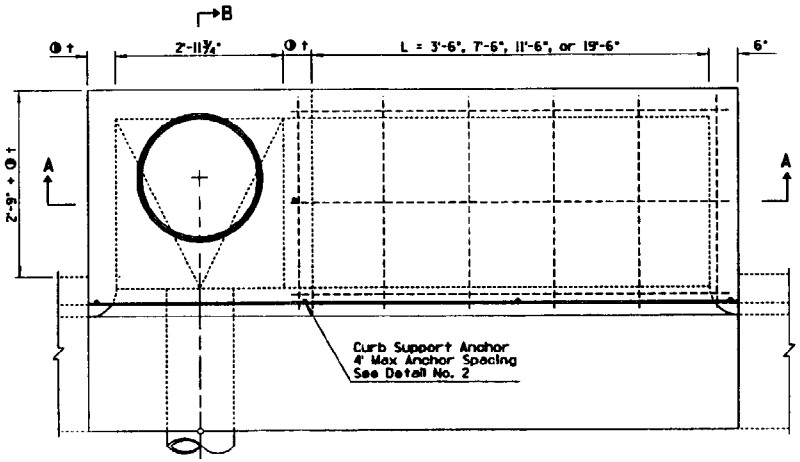

PLAN

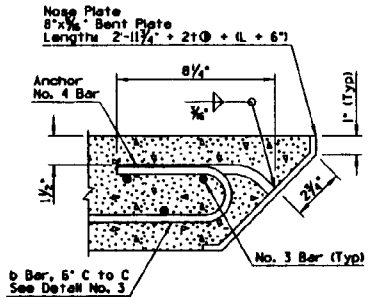

DETAIL NO. 1

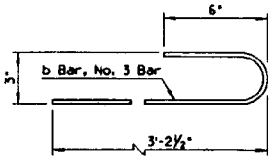

DETAIL NO. 3

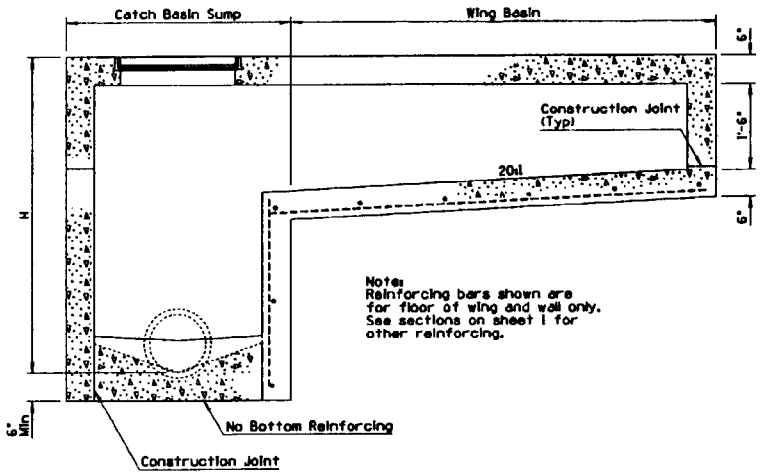

SECTION A-A
USE THIS SECTION WHEN H IS GREATER THAN 5'

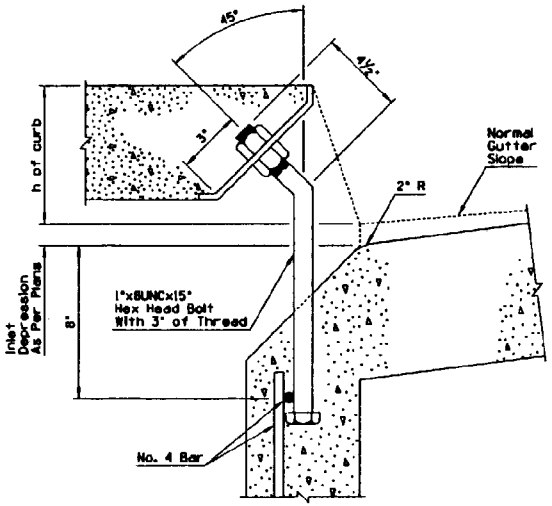

DETAIL NO. 2
CURB SUPPORT ANCHOR

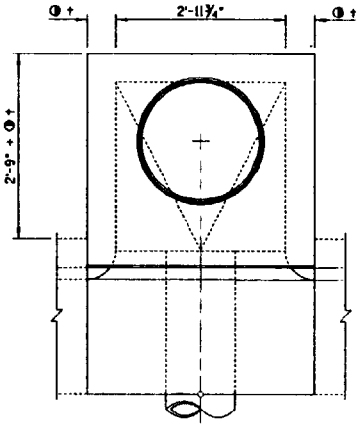

DETAIL NO. 4

DESIGN APPROVED	STATE OF ARIZONA DEPARTMENT OF TRANSPORTATION DIVISION OF HIGHWAYS STANDARD DRAWINGS	ISSUE 5/97
APPROVED FOR DISTRIBUTION	CATCH BASIN, TYPE 3	DRAWING NO. C-15.20 Sheet 2 of 2

NO.	DESCRIPTION OF REVISION	MADE BY	DATE
1	REVISED STD FOR NEW FRAME	PHB	5/97
2	REVISED DETAIL	PHB	5/97
3	REVISED FLOOR FOR POURING AFTER BUILD	PHB	5/97
4	ADDED SECTION OR DETAIL	PHB	5/97
5	REVISED NOTE	PHB	5/97
6	ADDED NOTE	PHB	5/97
7			
8			

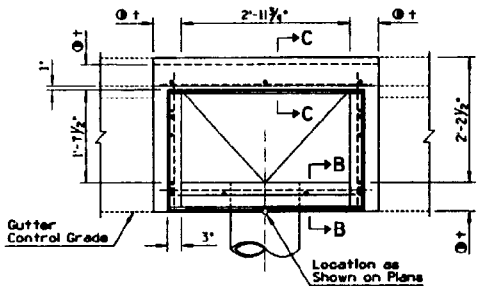

PLAN - CATCH BASIN TYPE 4 - SINGLE

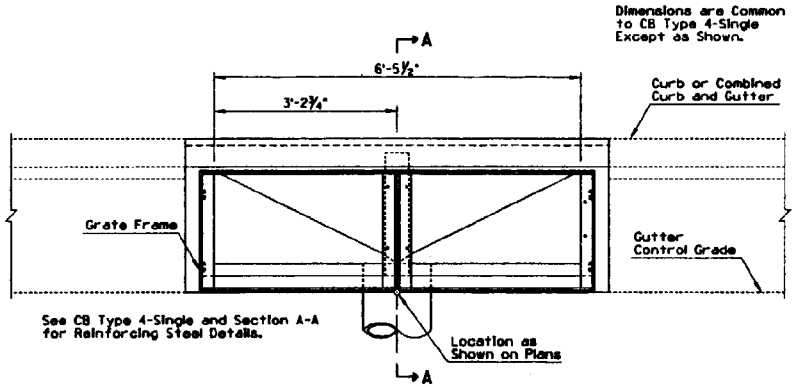

PLAN - CATCH BASIN TYPE 4 - DOUBLE

GENERAL NOTES

(6) 1. Catch basin can be used on grade or at roadway sag.

2. Pipes can be placed in any wall.

(5) 3. Floor shall have a wood trowel finish and a minimum 4% slope along the axis of the pipe toward the pipe.

4. Curb over catch basin shall not be constructed until catch basin concrete has set for a minimum of 24 hours.

(6) 5. Catch basin can be used with curb and gutter (as shown) or without.

6. See Stds C-15.50 for grate and frame details and opening areas.

7. Any specified inlet depression shall be warped to opening according to Std C-15.70.

8. All structural steel shall be ASTM A36.

9. Grate, frame and beam shall be given one shop coat of No. 1 paint.

10. All concrete shall be Class B.

11. Construction joints and drains shall be placed to meet field conditions. See Std C-15.70.

(6) 12. Silicone sealant shall be placed between the grate frame and PCCP, recessed ¼" from the pavement surface.

(6) 13. See Detail No. 2 for catch basin with wide gutter.

14. ⓣ = 6" when H is 8' or less.
8" when H is greater than 8'.
See Section B-B.

■ 9" when pavement is AC.
Match pavement thickness when pavement is PCCP.

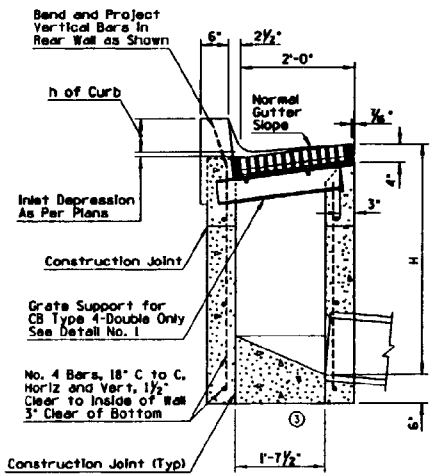

SECTION A-A

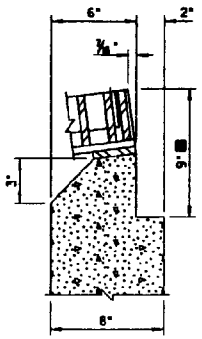

USE THIS SECTION WHEN t=8"

SECTION B-B ②

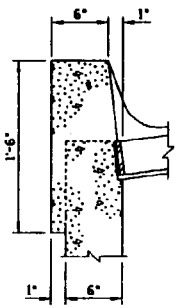

SECTION C-C ④

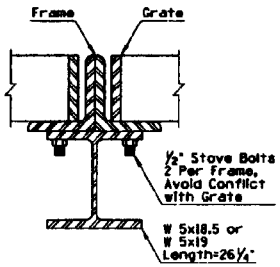

DETAIL NO. 1

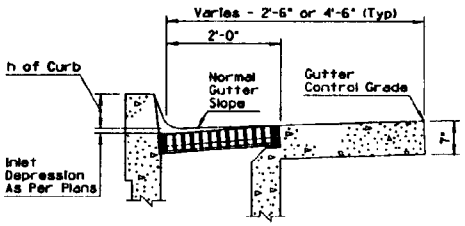

DETAIL NO. 2 ④

DESIGN APPROVED	STATE OF ARIZONA DEPARTMENT OF TRANSPORTATION DIVISION OF HIGHWAYS STANDARD DRAWINGS	REV. 5/97
APPROVED FOR DISTRIBUTION	① CATCH BASIN, TYPE 4	DRAWING NO. C-15.30

NO.	DESCRIPTION OF REVISIONS	MADE BY	DATE
1	REVISED STD FOR NEW FRAME AND NOSE PLATE	PHB	5/97
2	ADDED SHEET 2 FOR REVISED DETAILS	PHB	5/97
3	REVISED SECTION	PHB	5/97
4	REVISED LENGTHS OF BARS	PHB	5/97
5	ADDED SECTION	PHB	5/97
6	REVISED NOTE	PHB	5/97
7	CONSOLIDATED NOTES	PHB	5/97
8	ADDED NOTE	PHB	5/97

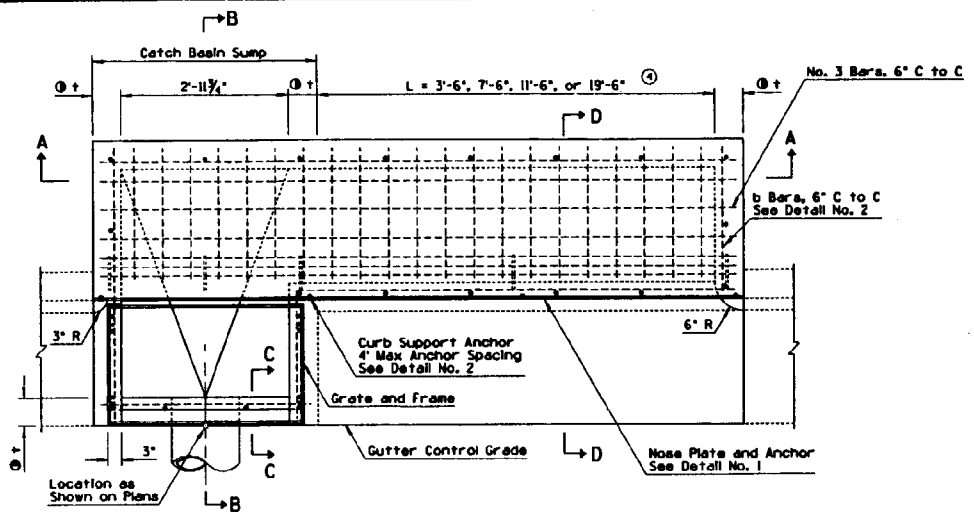

PLAN

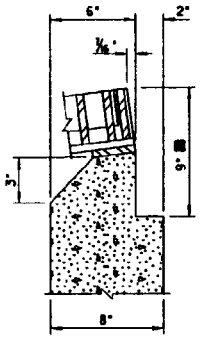

SECTION C-C

USE THIS SECTION WHEN t=8" ③

GENERAL NOTES

⑥ 1. Catch basin can be used on grade or at roadway sag.

① 2. Catch basin has three configurations:
Sump Only-Sump portion of catch basin
Single Wing (Illustrated)-Sump with wing basin upstream.
Double Wing-Sump with symitrical wing basins each side.

3. Pipes can be placed in any wall except wall adjacent to a wing basin.

⑥ 4. Floor shall have a wood trowel finish. Slope of the sump portion of the catch basin along the axis of the pipe shall be 4%.

5. Any specified inlet depression shall be warped to opening according to Std C-15.70.

6. All structural steel shall be ASTM A36.

7. Nose plate shall be given one shop coat of No. 1 paint.

8. All concrete shall be Class B.

9. All reinforcing bars shall be No. 4, 1'-6" C to C both ways and 1½" clear to inside of walls and outside of wing basin floor except as shown.

10. Curb opening area (sq ft) per inch of curb "h" + inlet depression = curb opening length (ft) x 0.0834.

11. Welding shall be in accordance with Standard Welding Specifications.

12. See Std C-15.50 for grate and frame details and opening areas.

13. Construction joints and drains shall be placed to meet field conditions. Std C-15.70.

⑥ 14. Silicone sealant shall be placed between the grate frame and PCCP, recessed ¼" from the pavement surface.

15. ◐t = 6" when H is 8' or less.
8" when H is greater than 8'.
See Section C-C.

16. ■ = 9" when pavement is AC.
Match pavement thickness when pavement is PCCP.

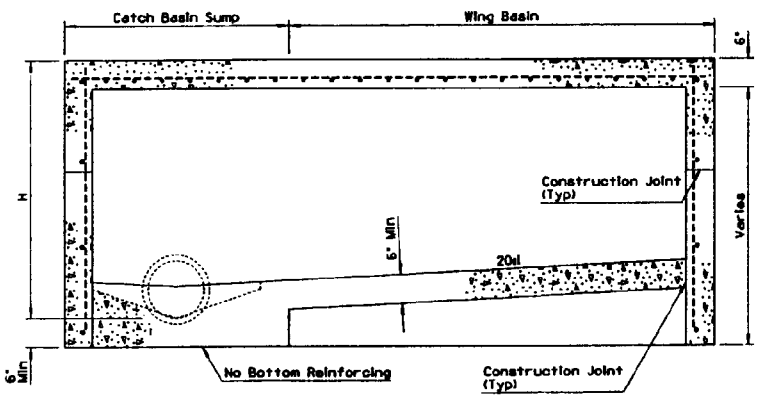

SECTION A-A

USE THIS SECTION WHEN H=5' OR LESS ③

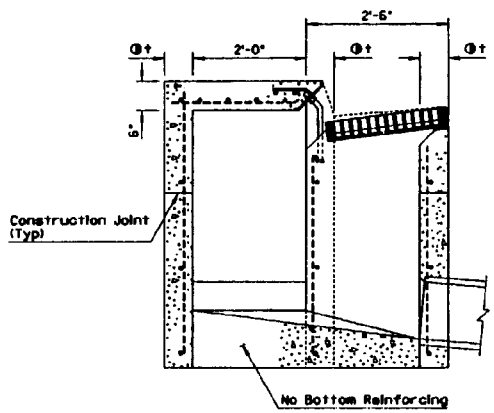

SECTION B-B ③

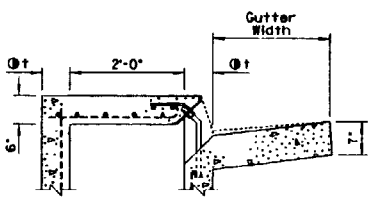

SECTION D-D ⑤

DESIGN APPROVED	STATE OF ARIZONA DEPARTMENT OF TRANSPORTATION DIVISION OF HIGHWAYS STANDARD DRAWINGS	REV. 5/97
APPROVED FOR DISTRIBUTION	①② CATCH BASIN, TYPE 5	DRAWING NO. C-15.40 Sheet 1 of 2

1			
2			
3			
4			

GENERAL NOTES

1. See sheet 1 of 2 for other dimensions, notes and reinforcing steel.
2. ⊕t = 6" when H is 8' or less.
   8" when H is greater than 8'.

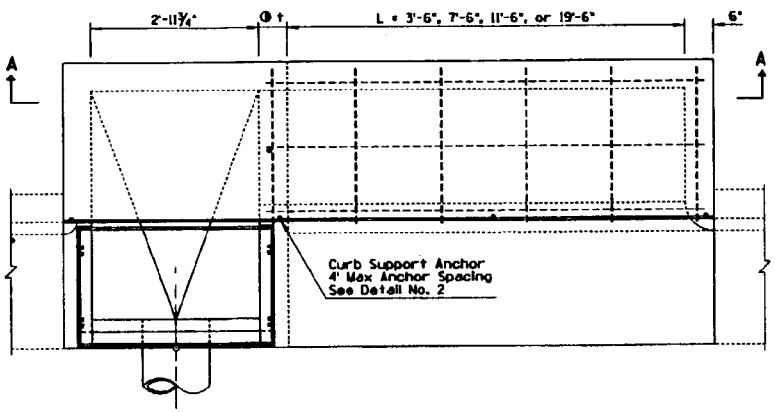

PLAN

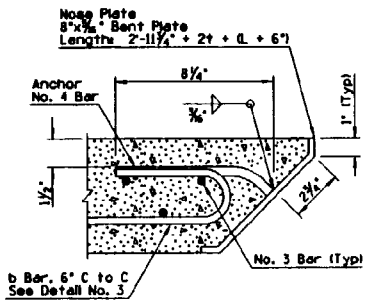

DETAIL NO. 1

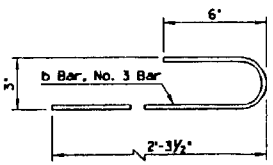

DETAIL NO. 3

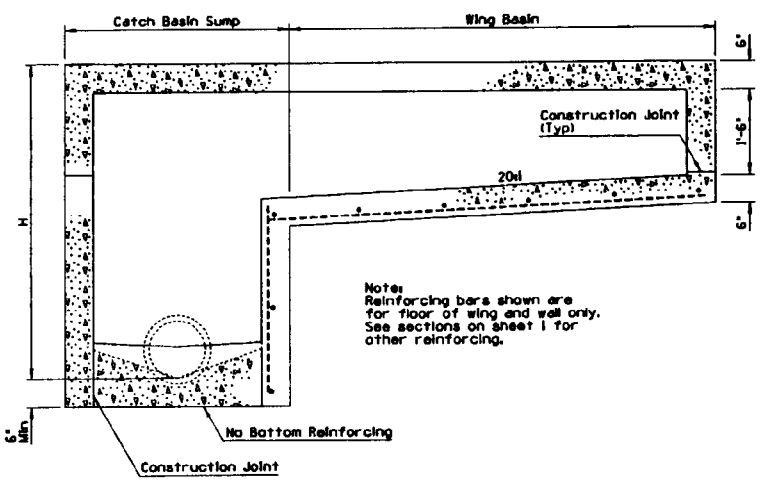

SECTION A-A
USE THIS SECTION WHEN H IS GREATER THAN 5'

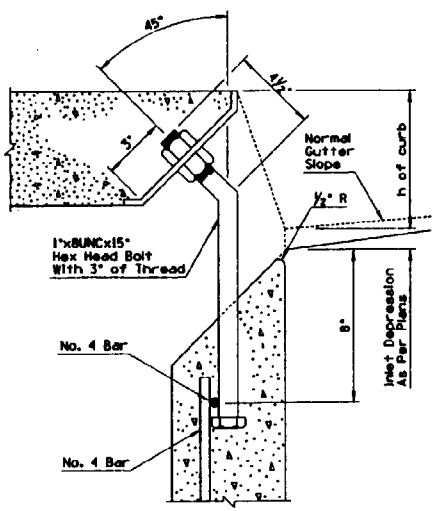

DETAIL NO. 2
CURB SUPPORT ANCHOR

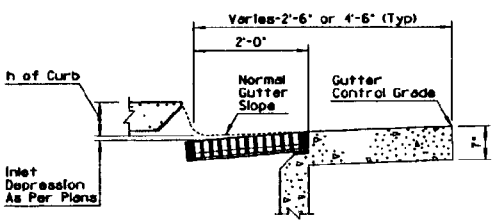

DETAIL NO. 4

DESIGN APPROVED: Terry H. Ottanes	STATE OF ARIZONA DEPARTMENT OF TRANSPORTATION DIVISION OF HIGHWAYS STANDARD DRAWINGS	ISSUE 5/97
APPROVED FOR DISTRIBUTION: [signature]	CATCH BASIN, TYPE 5	DRAWING NO. C-15.40 Sheet 2 of 2

NO.	DESCRIPTION OF REVISIONS	MADE BY	DATE
1	DELETED ALL GRATES EXCEPT WIDE EF-1	PHB	1/96
2	DELETED HARDER FRAME	PHB	1/96
3	DELETED THREE GENERAL NOTES	PHB	1/96
4	ADDED GENERAL NOTE	PHB	1/96

GENERAL NOTES

1. Grating units and frames shall be fabricated from structural steel ASTM A36 except as noted.
2. ③ All welding shall be in accordance with Standard Welding Specifications.
3. The completed assembly shall be given one shop coat of No. 1 paint.
4. Frames and grates shall fit to a maximum rock of 0.093" at any point.
5. ④ Grate opening is 3.97 Sq. Ft.

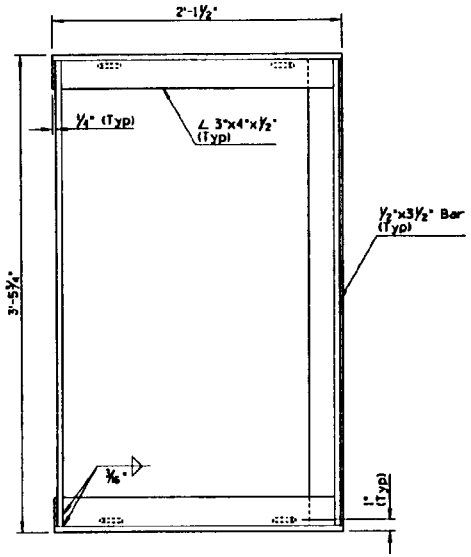

PLAN

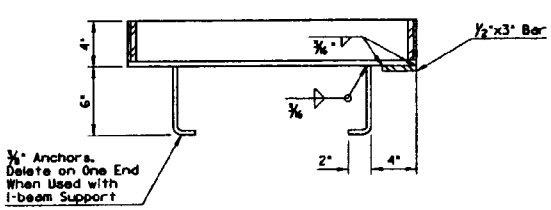

SECTION

FRAME ②

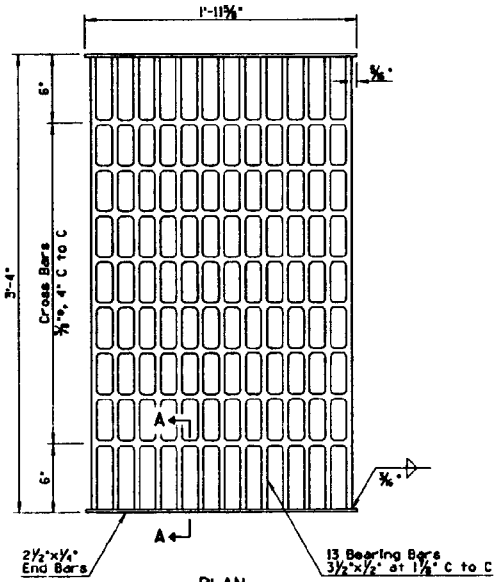

PLAN

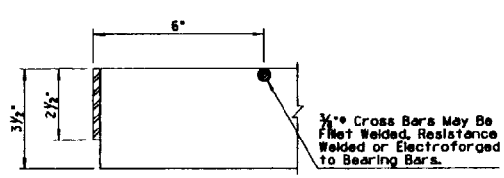

SECTION A-A

GRATE ①

DESIGN APPROVED: Jerry H. Ottman	STATE OF ARIZONA DEPARTMENT OF TRANSPORTATION DIVISION OF HIGHWAYS STANDARD DRAWINGS	REV. 5/97
APPROVED FOR DISTRIBUTION: Ronald Wilson	CATCH BASIN, GRATES	DRAWING NO. C-15.50

NO.	DESCRIPTION OF REVISIONS	MADE BY	DATE
1			
2			
3			
4			

GENERAL NOTES

1. Cover shall be non-locking.
2. Frame and cover shall be cast iron or structural steel.
3. Catch basin access frame and cover is for use in sidewalk area only.
4. Cover shall be filled with concrete and broom finished.

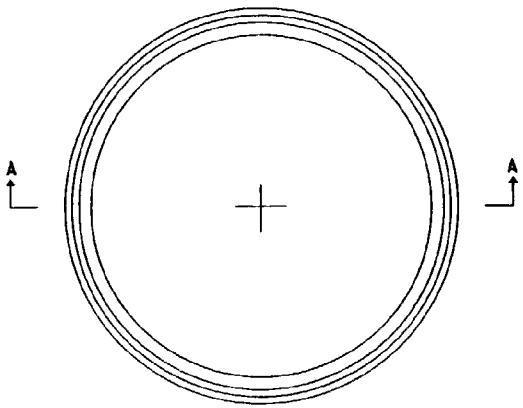

PLAN

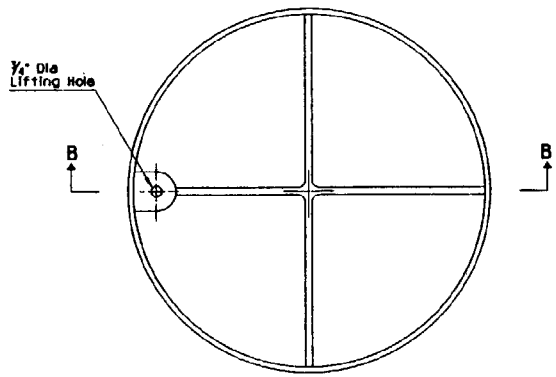

PLAN

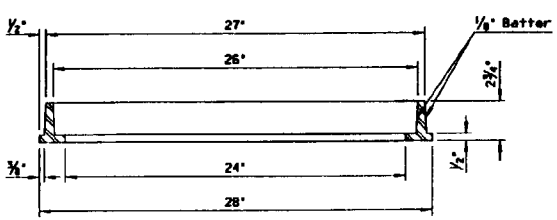

SECTION A-A

FRAME

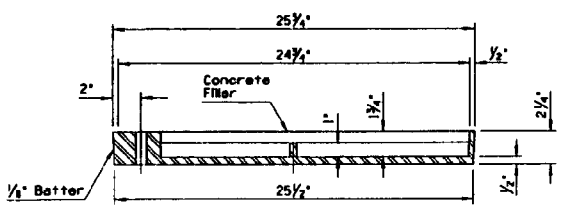

SECTION B-B

COVER

DESIGN APPROVED	STATE OF ARIZONA DEPARTMENT OF TRANSPORTATION DIVISION OF HIGHWAYS STANDARD DRAWINGS	ISSUE 5/97
APPROVED FOR DISTRIBUTION	CATCH BASIN ACCESS FRAME AND COVER DETAILS	DRAWING NO. C-15.65

NO.	DESCRIPTION OF REVISIONS	MADE BY	DATE
1	REVISED LTD FOR NEW FRAME	PHB	5/97
2	ADDED DETAIL TO SHOW WIDE GUTTER	PHB	5/97
3	REVISED NOTE	PHB	5/97
4			
5			

GENERAL NOTES

1. No inlet depression shall extend into a traffic lane.
2. Maximum combined inlet and gutter depression is 3 inches. See Detail No. 1.
3. Maximum distance along curb between catch basins where full gutter depression is used is 10 feet.
4. See Std. C-15.80 for aprons used with C-15.80 Catch Basin.
5. See Detail No. 2 for grate type catch basins with wide gutter.

LEGEND

- ○ - Normal pavement or gutter flow line elevation.
- ● - Depressed elevation.
- ⊖ - Straight grade with downward slope.
- W - Normal gutter width per Std. C-05.10.
- ▲ - Types 1, 3, & 5.
- ◆ - Type 4 & C-15.91.

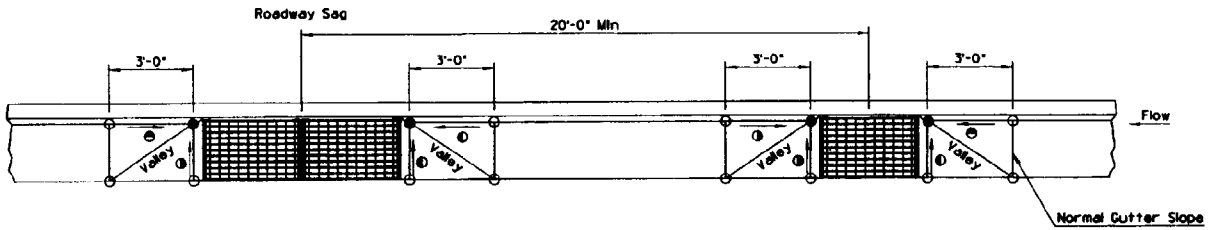

CATCH BASIN SPACING AT ROADWAY SAG CONDITION

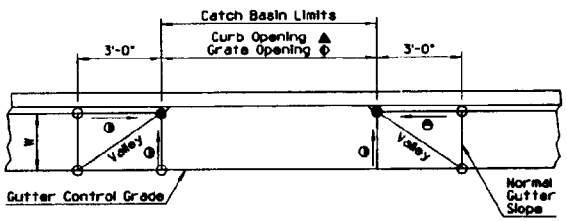

INLET DEPRESSION

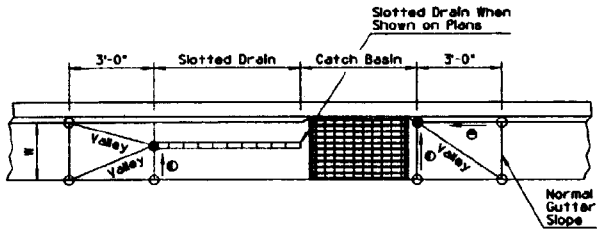

INLET DEPRESSION
CATCH BASIN WITH SLOTTED DRAIN

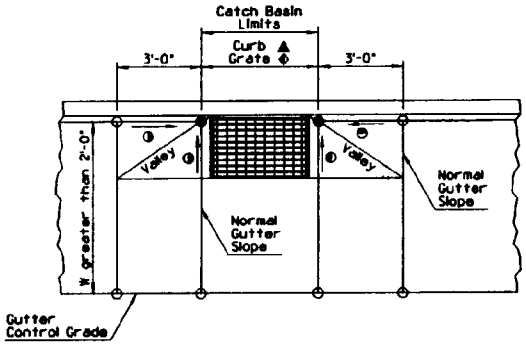

INLET DEPRESSION ②
CATCH BASIN WITH WIDE GUTTER

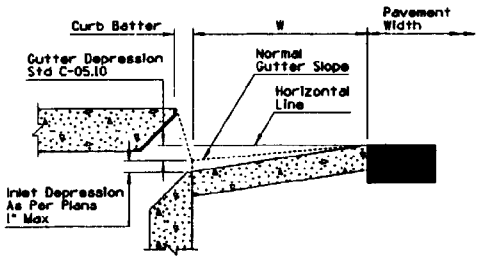

DETAIL NO. 1

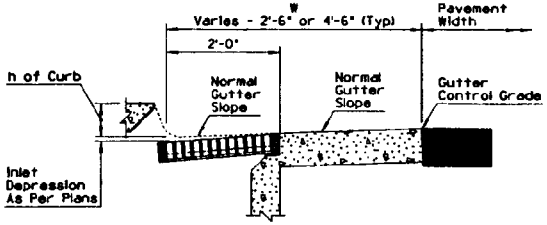

DETAIL NO. 2 ②

DESIGN APPROVED	STATE OF ARIZONA DEPARTMENT OF TRANSPORTATION DIVISION OF HIGHWAYS STANDARD DRAWINGS	REV. 5/97
APPROVED FOR DISTRIBUTION	① CATCH BASIN MISC. DETAILS	DRAWING NO. C-15.70 Sheet 1 of 2

	DESCRIPTION OF REVISIONS	MADE BY	DATE
D			
C			
B			
A			

GENERAL NOTES

1. Construction drain may be deleted at the option of the Engineer.

LEGEND

O - Normal pavement or gutter flow line elevation.

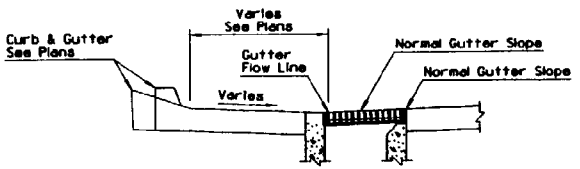

SECTION

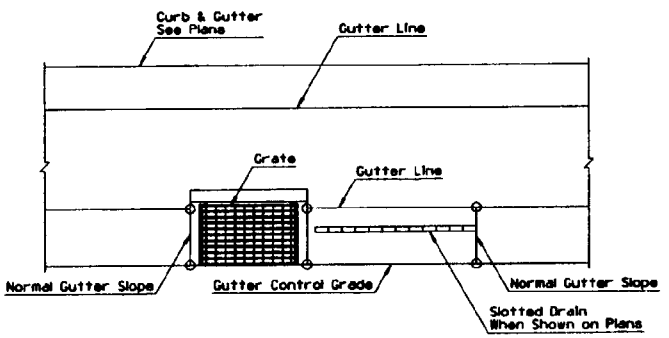

TYPE 4 CATCH BASIN WITHOUT CURB

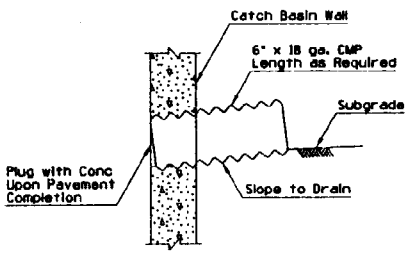

CATCH BASIN CONSTRUCTION DRAIN

DESIGN APPROVED APPROVED FOR DISTRIBUTION	STATE OF ARIZONA DEPARTMENT OF TRANSPORTATION DIVISION OF HIGHWAYS STANDARD DRAWINGS	ISSUE 5/97
	① CATCH BASIN MISC. DETAILS	DRAWING NO. C-15.70 Sheet 2 of 2

	DESCRIPTION OF REVISIONS	WORK BY	DATE
1	CHANGED APRON TO PORTLAND CEMENT CONCRETE ONLY	MB	5/97
2	REVISED SLOPE	MB	5/97
3			
4			

GENERAL NOTES

① 1. Apron shall be portland cement concrete.
2. All concrete shall be Class B.
3. Grating shall be fabricated of structural steel.
4. Structural steel shall be in accordance with ASTM A36.
5. Welding shall be in accordance with Standard Welding Specifications.
6. Grating assembly shall be given one shop coat of No. 1 paint.
7. "H" indicated on plans.

* 8" When Wall Height Exceeds 8'

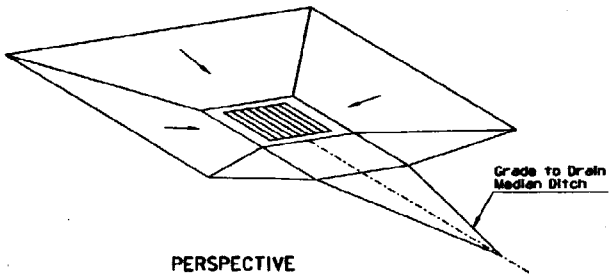

PERSPECTIVE

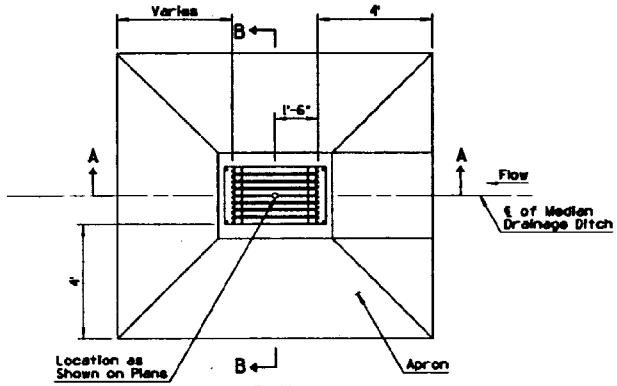

PLAN

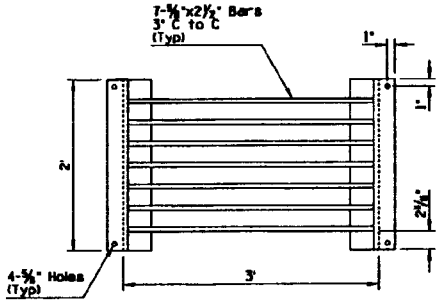

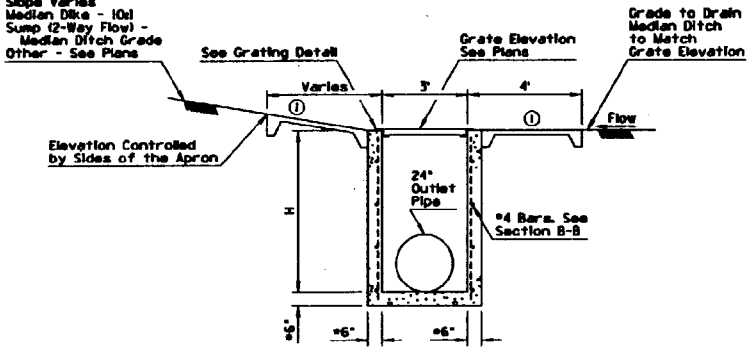

SECTION A-A

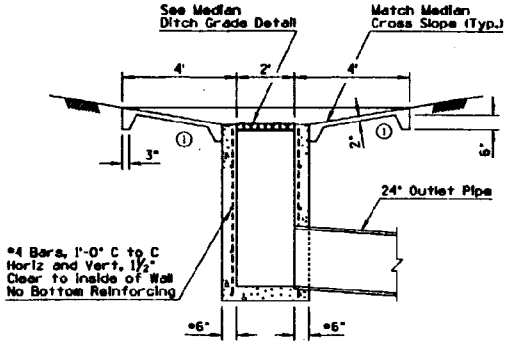

SECTION B-B

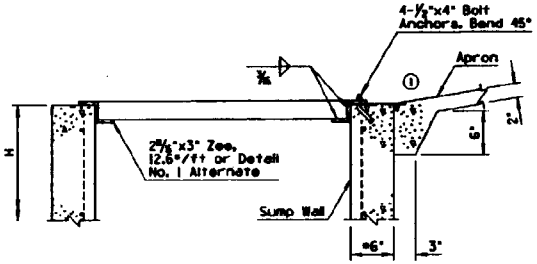

GRATING DETAIL

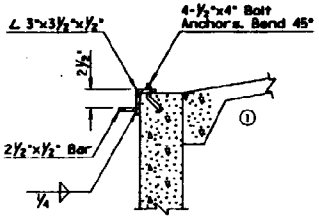

DETAIL NO. 1

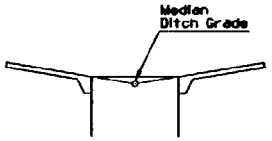

MEDIAN DITCH GRADE DETAIL

DESIGN APPROVED: Terry H. Otterson	STATE OF ARIZONA DEPARTMENT OF TRANSPORTATION DIVISION OF HIGHWAYS STANDARD DRAWINGS	REV. 5/97
APPROVED FOR DISTRIBUTION: [illegible]	CATCH BASIN, MEDIAN FLUSH	DRAWING NO. C-15.80

NO.	DESCRIPTION OF REVISIONS	MADE BY	DATE
1	CHANGED APRON TO PORTLAND CEMENT CONCRETE ONLY	PHB	5/97
2	REVISED SLOPE	PHB	5/97
3			
4			

GENERAL NOTES

① 1. Apron shall be portland cement concrete, Class B.
2. All concrete shall be Class B.
3. Grating shall be fabricated of structural steel.
4. Structural steel shall be in accordance with ASTM A36.
5. Welding shall be in accordance with Standard Welding Specifications.
6. Grating assembly shall be given one shop coat of No. 1 paint.
7. 'H' indicated on plans.

* 8" When Wall Height Exceeds 8'

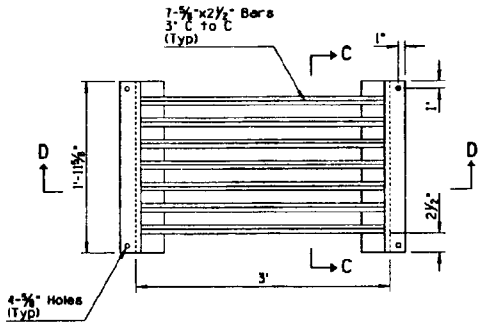

GRATING DETAIL

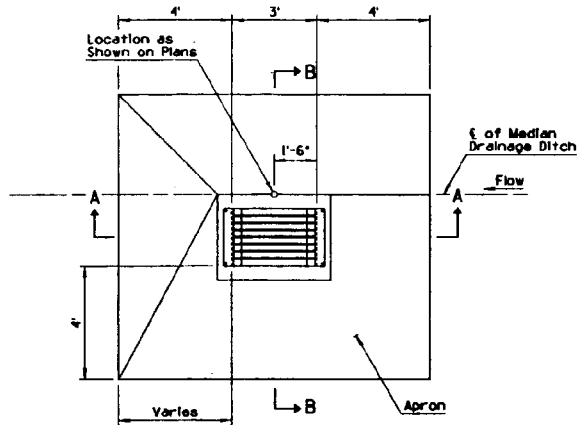

PLAN

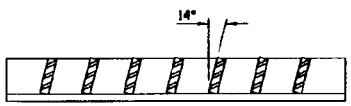

SECTION C-C

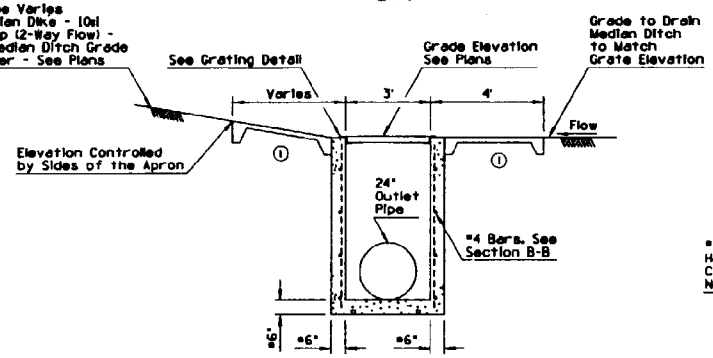

SECTION A-A

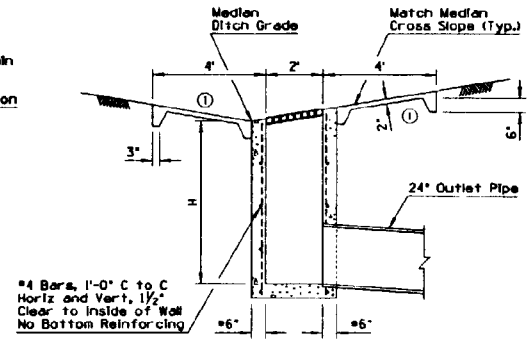

SECTION B-B

DIMENSION TABLE	
Slope	A
6:1	0.50'
4:1	0.75'
3:1	1.00'
2:1	1.50'

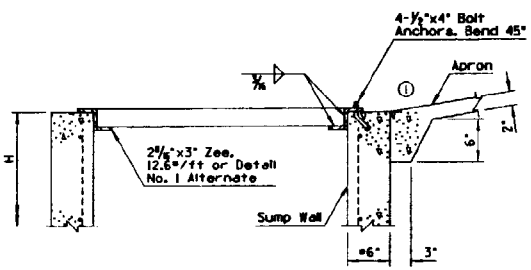

SECTION D-D

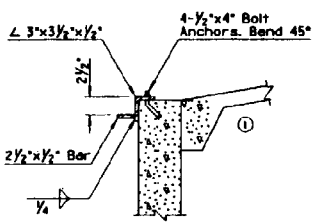

DETAIL NO. 1

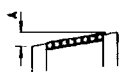

WALL HEIGHT DETAIL

DESIGN APPROVED	STATE OF ARIZONA DEPARTMENT OF TRANSPORTATION DIVISION OF HIGHWAYS STANDARD DRAWINGS	REV. 5/97
APPROVED FOR DISTRIBUTION	CATCH BASIN, MEDIAN SIDE SLOPE	DRAWING NO. C-15.81