Extra

May 11, 1994

TO: All Users of Construction Standards

FROM: Mr. Terry H. Otterness, Design Program Manager, Roadway Engineering Group
Mr. August V. Hardt, Assistant State Engineer, District Operations Group, Administration

SUBJECT: Revisions to Construction Standards

Several changes are being made to existing Construction Standard Drawings and the Construction Standards Index.

Major changes include: revising and expanding dikes and berms, replacing buried anchor guard rail with nested guard rail, consolidating bolted anchor guard rail into one standard, updating glare screen, and new standards for: guard rail transitions, concrete half barrier transition, and rub rail. Also, eleven existing standards are being deleted.

A complete listing of the changed Standards and the various revisions is as follows:

REVISED DRAWING	**REVISION**
C-03.10 Ditches, Channels, Dikes & Berms	Deleted old note 4 that referred to a non-existant standard. Corrected spelling of "dyke". Added slope rounding to crown and grader ditch details. Added a callout for profile grades on channels with a bottom width more than 10'. Expanded standard: ditches and channels on one sheet and dikes on another. Added items frequently used as details: ditch dikes, pipe berms, headwall berms. Fixed dike slopes within clear zone or "recovery area" at 10:1. Added a perspective view of a typical median dike installation.
C-05.30 Sidewalk Ramps	Type 1 - Added note indicating 4' minimum bottom width, as per ADA. Types 2 & 4 - Added note indicating that for curb heights over 7" to see plans. Modified note indicating that for curb heights under 6" to use values shown for 6" high curb.

REVISED DRAWING	REVISION
C-07.01 PCCP Joints	Revised median barrier joint to show all PCCP. Revised median barrier joint to show AC and PCCP and revised the joint. Added note on pavement cross slope.
C-10.28 Nested Steel W Beam	New standard replaces old buried anchor portions of old Stds C-10.23 & C-10.24.
C-10.29 Bolted Anchor Guard Rail	New standard from bolted anchor portions of old Stds C-10.23 & C-10.24
C-10.30 Guard Rail Transition W Beam to Half Barrier (Approach)	New standard from portions of old Stds C-10.25, C-10.30, & C-10.35. Removed all but first two rectangular plate washers. For steel posts, changed the W structural shape blockouts on the first two posts to 6"x6" tube.
C-10.31 Guard Rail Transition W Beam to Half Barrier (Appr.)(Curb)	New standard from portions of old Stds C-10.25, C-10.30, & C-10.35. Removed all but first two rectangular plate washers. For steel posts, changed the W structural shape blockouts on the first two posts to 6"x6" tube. Added rub rail. Added 25' of Nested (additional) Steel W Beam.
C-10.32 Guard Rail Transition W Beam to Half Barrier (Departure)	New standard.
C-10.39 Hardware for W Beam Transition to Concrete Barrier	New standard.
C-10.70 Concrete Half Barrier Transition	New standard from portions of old Stds C-10.25, C-10.30, & C-10.35. Revised shape of end of transition to that of bridge concrete barrier transition. Changed the long bolt holes to embedded anchors as per Std B-21.21.

REVISED DRAWING	REVISION
C-10.74 Hardware for Concrete Barrier Transitions	New standard.
C-10.80 Rub Rail	New standard from portions of old Stds C-10.25, C-10.30, C-10.35 & C-10.40. Standard 25' length of rub rail is to be cut, bent, and welded. End of rub rail is attached to last guard rail post with an additional blockout.
C-10.83 Hardware for Rub Rail	New standard.
C-10.97 Glare Screen	Added details showing location of glare screen on median barrier. Added detail that shows the routing of the top and bottom tension wires. Deleted size of hole for expansion anchor bolts. Added three types of wire ties for fastening the tension wires to the posts. Added a note and detail indicating that the glare screen fabric shall be installed such that it blocks headlight glare. Added details clarifying assembly of the top and bottom bolts. Changed the large Type B washer. Added a detail for when the glare encounters an obstruction.
C-12.20 Fence, Chain Link	Corrected bottom clearance dimension in note six. Revised length of corner posts on Type 2 fence. Revised the typical fence location drawing.

The following existing Construction Standard Drawings are being deleted.

DELETED DRAWINGS

C-09.20 Grooving for Concrete Shoulders (Rev. 1/83)

C-10.23 Buried & Bolted Anchor, Timber Post (Rev. 7/85)

C-10.24 Buried & Bolted Anchor, Steel Post (Rev. 7/85)

C-10.25 Transition W Beam (Timber Post) to Concrete Half Barrier (Rev. 3/87)

C-10.30 Transition W Beam (Steel Post) to Concrete Half Barrier (Rev. 6/86)

C-10.35 Transition W Beam (Steel Post) to Concrete Half Barrier, Curb Installation (Rev. 6/86)

C-10.40 Transition W Beam to Concrete Median Barrier (Rev. 6/86)

C-10.45 W Beam BCT Attenuator Assembly (Rev. 7/85)

C-10.50 W Beam BCT Attenuator Assembly (Rev. 7/85)

C-10.55 W Beam BCT Attenuator Assembly (Rev. 7/85)

C-10.96 Glare Screen, Type "P", Concrete Median Barrier (Rev. 1/83)

CONSTRUCTION STANDARD - INDEX

DRAWING NO.	TITLE
C-01.10	SYMBOL LEGEND
C-01.11	SYMBOL LEGEND
C-01.12	SYMBOL LEGEND
C-01.13	SYMBOL LEGEND
C-01.30	GENERAL ABBREVIATIONS
C-01.31	GENERAL ABBREVIATIONS
C-01.32	GENERAL ABBREVIATIONS
C-02.10	SLOPES, INTERSTATE
C-02.20	SLOPES, PRIMARY ROADWAYS
C-02.30	SLOPES, SECONDARY/MISC ROADWAYS
C-02.40	PAVEMENT CROWN, PARABOLIC
C-03.10	DITCHES, CHANNELS, DIKES AND BERMS (5 SHEETS)
C-04.10	SPILLWAY, EMBANKMENT
C-04.20	DOWNDRAIN, EMBANKMENT
C-04.30	SPILLWAY, EMBANKMENT LENGTH TABLE
C-04.40	DOWNDRAIN, EMBANKMENT LENGTH TABLE
C-04.50	DOWNDRAIN ENERGY DISSAPATOR
C-05.10	SINGLE CURB, CURB & GUTTER EMBANKMENT CURB
C-05.11	RAMP CURB & GUTTER LAYOUT
C-05.12	CURB & GUTTER TRANSITIONS
C-05.20	CONCRETE DRIVEWAYS & SIDEWALKS
C-05.30	SIDEWALK RAMP (4 SHEETS)
C-05.40	MEDIAN PAVING AND MOSE TRANSITION
C-05.50	CONCRETE BUS BAY
C-06.10	DRIVEWAY & TURNOUT LAYOUTS (2 SHEETS)
C-06.20	GEOMETRICS, DETOUR
C-07.01	PCCP JOINTS (2 SHEETS)
C-07.02	LOAD TRANSFER DOWEL ASSEMBLY
C-07.03	MAINLINE PCCP JOINT LOCATIONS (8 SHEETS)
C-07.04	ENTRANCE RAMP PCCP JOINTS
C-07.05	EXIT RAMP PCCP JOINTS
C-07.06	TRENCH BACKFILL AND PAVEMENT REPLACEMENT
C-08.10	RAMP GEOMETRICS
C-08.20	PAVED GORE AREA
C-09.10	GROOVING FOR BITUMINOUS SHOULDERS

DRAWING NO.	TITLE
C-10.01	TYPE A GUARD RAIL INSTALLATION, REFLECTOR TAB
C-10.02	TYPE B GUARD RAIL INSTALLATION, REFLECTOR TAB
C-10.03	MEASUREMENT LIMITS FOR W BEAM AND THRIE BEAM SYSTEM
C-10.04	G4(1W) AND G4(2W) BLOCKED OUT W BEAM (TIMBER POST)
C-10.05	G4(1S) AND G4(2S) BLOCKED OUT W BEAM (STEEL POST)
C-10.06	G4(1S-MODIFIED) BLOCKED OUT W BEAM (STEEL POST) WITH SPECIAL CURB AND GUTTER
C-10.07	G9(A) AND G9(B) BLOCKED OUT THRIE BEAM (STEEL POST)
C-10.08	G9(C) BLOCKED OUT THRIE BEAM (STEEL POST)
C-10.09	HALF BARRIER, CAST IN PLACE, SLIP FORM
C-10.10	HALF BARRIER, CAST IN PLACE, FIXED FORM
C-10.11	HALF BARRIER, PRECAST
C-10.12	MEDIAN BARRIER, CAST IN PLACE, SLIP FORM
C-10.13	MEDIAN BARRIER, CAST IN PLACE, FIXED FORM
C-10.14	MEDIAN BARRIER, PRECAST
C-10.15	FLARED BREAKAWAY CABLE TERMINAL ASSEMBLY (TIMBER POST)
C-10.16	FLARED BREAKAWAY CABLE TERMINAL ASSEMBLY (STEEL POST)
C-10.17	BCT ASSEMBLY STEEL
C-10.18	BCT ASSEMBLY TIMBER
C-10.19	GUARDRAIL ASSEMBLY (2 SHEETS)
C-10.20	BARRIER DETAILS AT PIERS
C-10.21	GUARD RAIL ANCHOR ASSEMBLY STEEL TERMINAL POST
C-10.22	GUARD RAIL ANCHOR ASSEMBLY TIMBER TERMINAL POST
C-10.28	NESTED STEEL W BEAM (2 SHEETS)
C-10.29	BOLTED ANCHOR GUARD RAIL (2 SHEETS)
C-10.30	GUARD RAIL TRANSITION, W BEAM TO CONCRETE HALF BARRIER (APPROACH) (3 SHEETS)
C-10.31	GUARD RAIL TRANSITION, W BEAM TO CONCRETE HALF BARRIER (APPROACH) (CURB) (3 SHEETS)
C-10.32	GUARD RAIL TRANSITION, W BEAM TO CONCRETE HALF BARRIER (DEPARTURE) (3 SHEETS)
C-10.39	HARDWARE FOR W BEAM TRANSITION TO CONCRETE BARRIER
C-10.70	CONCRETE HALF BARRIER TRANSITION (4 SHEETS)
C-10.74	HARDWARE FOR CONCRETE BARRIER TRANSITIONS
C-10.80	RUB RAIL (2 SHEETS)
C-10.83	HARDWARE FOR RUB RAIL
C-10.97	GLARE SCREEN, CONCRETE MEDIAN BARRIER (3 SHEETS)
C-10.98	BARRIER TRANSITION - TANGENT TYPES A & B (2 SHEETS)
C-10.99	BARRIER TRANSITION - CURVE
C-11.10	ROADWAY CATTLE GUARD - FOOTING TYPE
C-11.11	ROADWAY CATTLE GUARD - GRILL & GRILL CLAMP DETAIL
C-11.12	ROADWAY CATTLE GUARD - FOOTING TYPE, MISC. DETAILS
C-11.20	CATTLE GUARD, DRAINAGE
C-11.30	CATTLE GUARD, RAILROAD
C-12.10	FENCE, WOVEN AND BARBED WIRE WITH GATES (5 SHEETS)
C-12.20	FENCE, CHAIN LINK TYPES 1 AND 2 WITH GATES (3 SHEETS)
C-12.30	CHAINLINK CABLE BARRIER (3 SHEETS)

REV. 5/94

NO	DESCRIPTION OF REVISIONS	MADE BY	DATE
1	REMOVED NOTE	PNB	3/94
2	ADDED SLOPE ROUNDING	PNB	3/94
3			
4			

GENERAL NOTES

1. Dimensions of ditches shall be shown on the plans, as bottom width, depth and length.
2. Ditches shall be constructed with a minimum grade to prevent erosion. Ditch outlet treatment shall be as provided on plans.

①

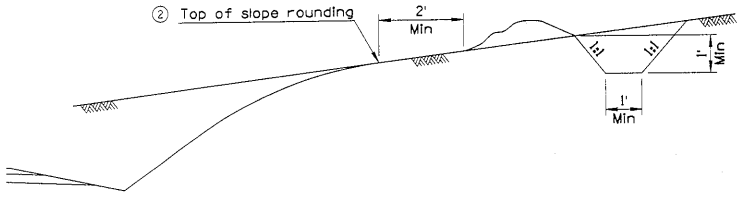

CROWN DITCH

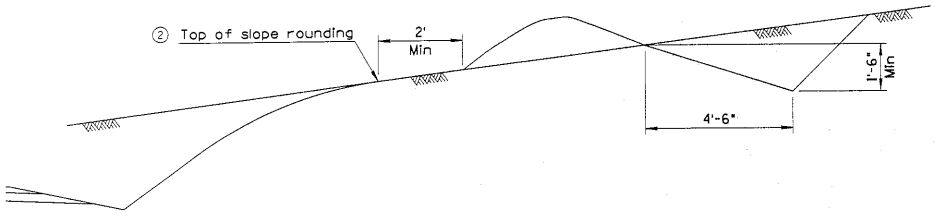

GRADER DITCH

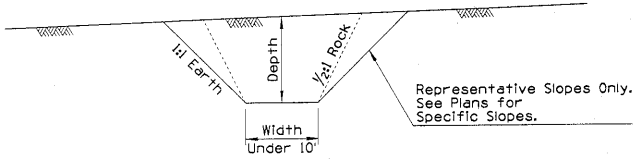

DITCH

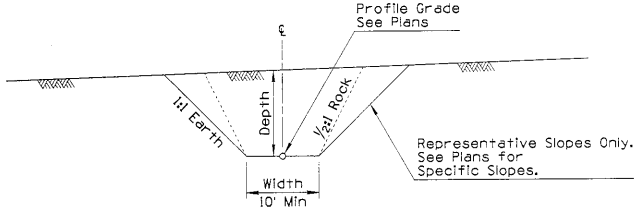

CHANNEL

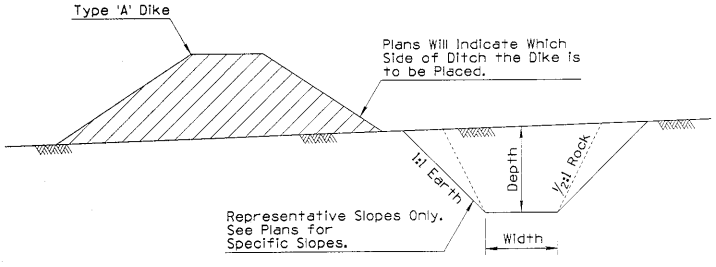

DITCH AND DIKE

DESIGN APPROVED Terry H. Otterness	STATE OF ARIZONA DEPARTMENT OF TRANSPORTATION DIVISION OF HIGHWAYS STANDARD DRAWINGS	REV. 3/94
APPROVED FOR DISTRIBUTION	DITCHES, CHANNELS, DIKES AND BERMS DITCHES AND CHANNELS	DRAWING NO. C-03.10 Sheet 1 of 5

NO.	DESCRIPTION OF REVISIONS	MADE BY	DATE
1	MODIFIED SLOPE	PNB	3/94
2	MODIFIED INSTALLATION DETAIL	PNB	3/94
3	ADDED PERSPECTIVE VIEW	PNB	3/94
4			

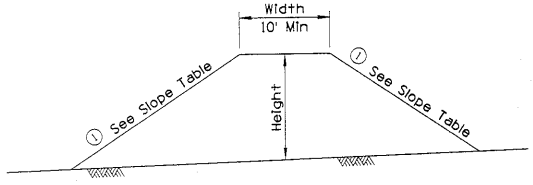

TYPE A DIKE

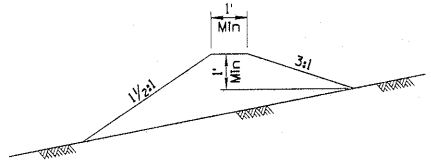

CROWN DIKE

GENERAL NOTES

1. Dimensions of dikes shall be shown on the plans as top width, height, length and top of dike elevation.
2. Dike side slopes outside the recovery area shall be shown on the plans.

SLOPE TABLE		
Inside Recovery Area	Outside Recovery Area	
	Desirable	Maximum
10:1	4:1	1½:1

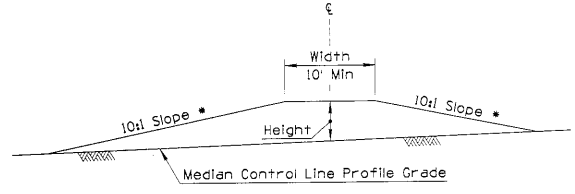

TYPE B TRANSVERSE MEDIAN DIKE

* Slope relative to grade of median at intersection with toe

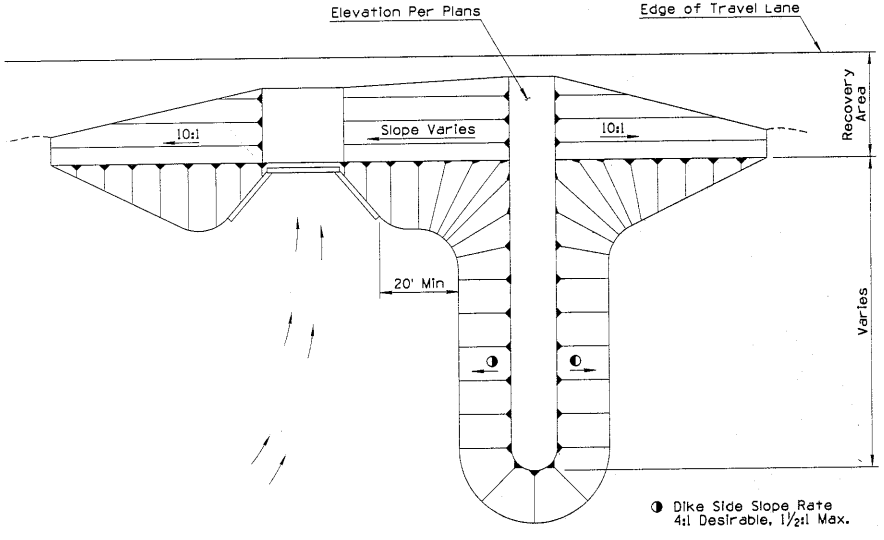

② TYPICAL DIKE INSTALLATION AT STRUCTURE

Place dikes at structures to create water cushion.

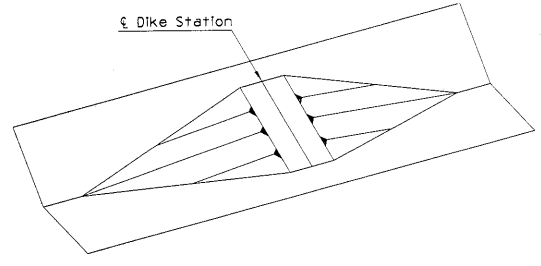

③ TYPICAL TRANSVERSE MEDIAN DIKE INSTALLATION

DESIGN APPROVED	STATE OF ARIZONA DEPARTMENT OF TRANSPORTATION DIVISION OF HIGHWAYS STANDARD DRAWINGS	REV. 3/94
APPROVED FOR DISTRIBUTION	DITCHES, CHANNELS, DIKES AND BERMS DIKES	DRAWING NO. C-03.10 Sheet 2 of 5

NO	DESCRIPTION OF REVISIONS	MADE BY	DATE
1			
2			
3			
4			

GENERAL NOTES

1. Dimensions for ditch dikes shall be shown on the plans as dike stationing, height, length, dike back slope and top of dike elevation.
2. Dimensions for cut ditch widening shall be shown on the plans as beginning and ending stations.

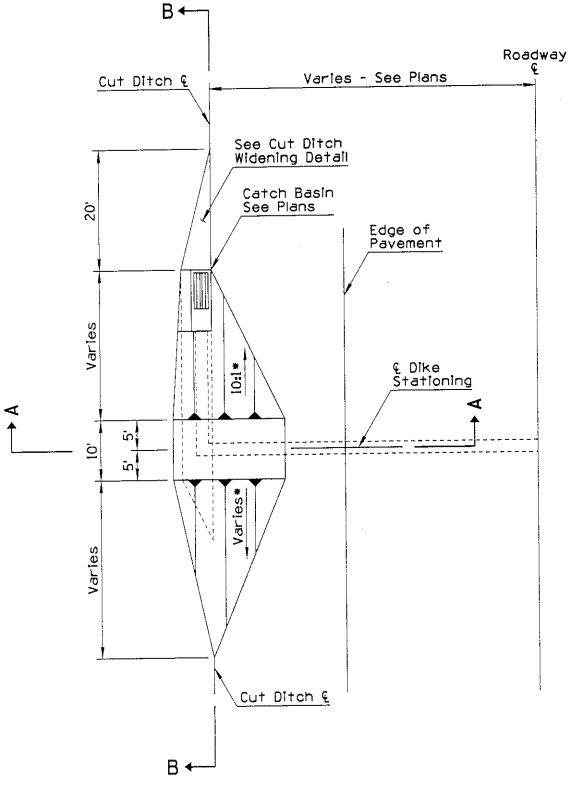

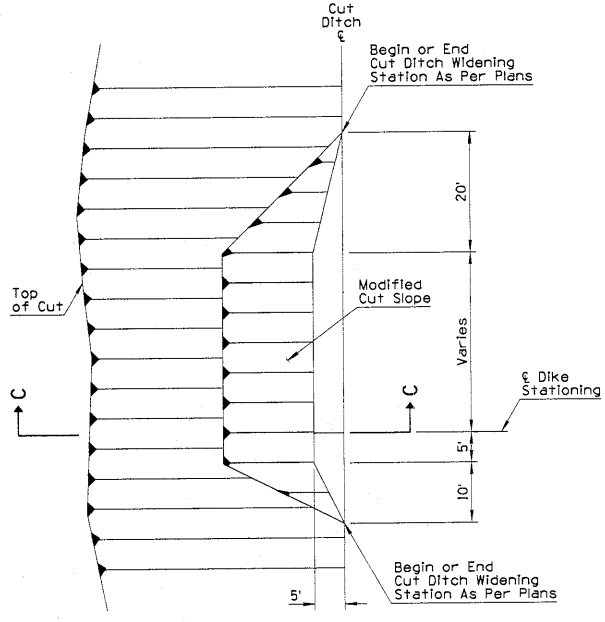

CUT DITCH WIDENING DETAIL

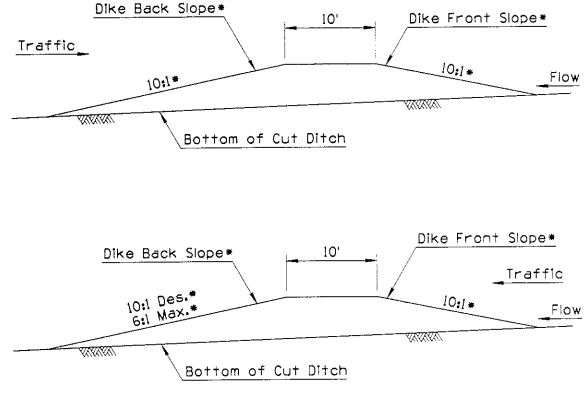

SECTION B-B

* Slope relative to grade of cut ditch at intersection with toe

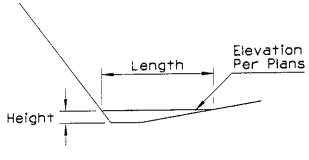

SECTION A-A

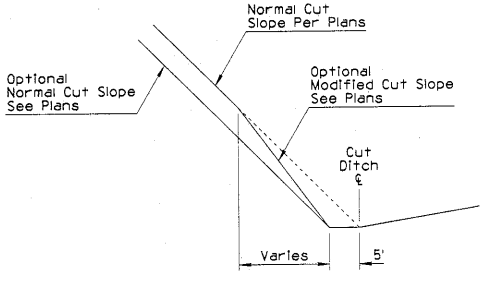

SECTION C-C

DESIGN APPROVED Terry H. Otterness	STATE OF ARIZONA DEPARTMENT OF TRANSPORTATION DIVISION OF HIGHWAYS STANDARD DRAWINGS	3/94
APPROVED FOR DISTRIBUTION	DITCHES, CHANNELS, DIKES AND BERMS DITCH DIKE	DRAWING NO. C-03.10 Sheet 3 of 5

NO.	DESCRIPTION OF REVISIONS	MADE BY	DATE
1			
2			
3			
4			

GENERAL NOTES

1. Pipe berms not required when pipe projection is protected by guard rail.
2. Berm construction similar for multiple pipe installation and for pipes without end sections.
3. Berm construction shown is for pipe extensions. Berm construction similar for new pipe installation. See Pipe Berm Requirement Detail. If Point A is within the recovery area, then a pipe berm is required and Point B is set at the edge of the recovery area.

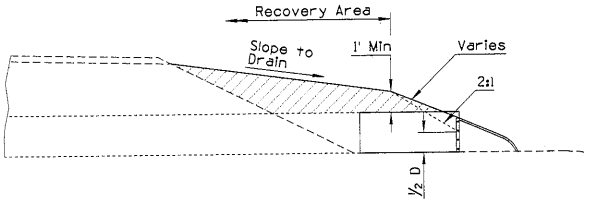

SECTION A-A (WITH END SECTION)

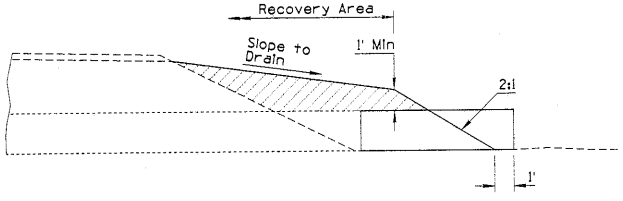

SECTION A-A (WITHOUT END SECTION)

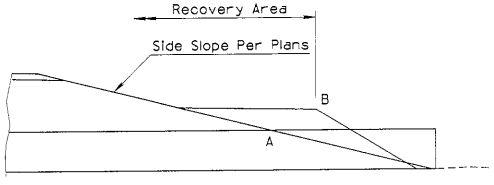

PIPE BERM REQUIREMENT DETAIL

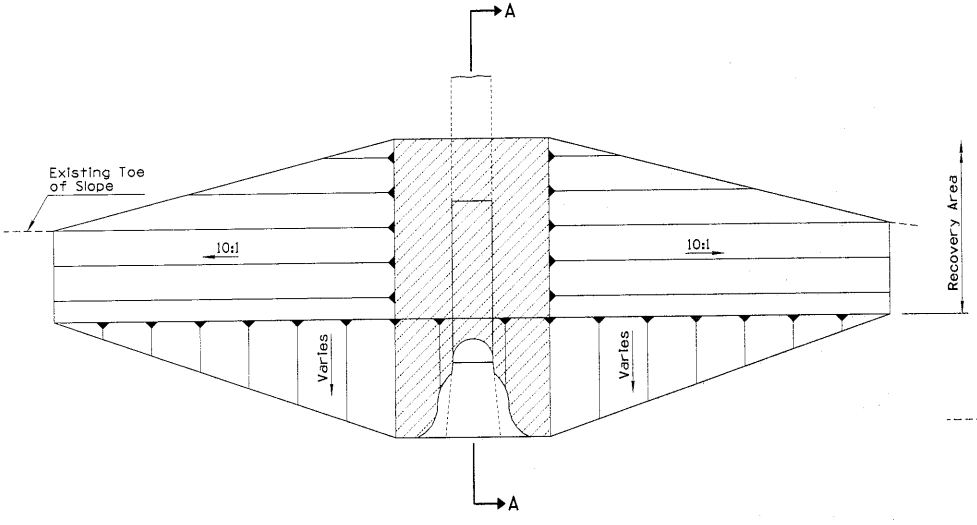

STRAIGHT PIPE PLAN

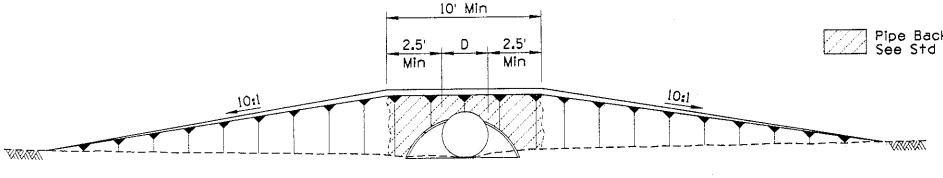

ELEVATION

Pipe Backfill and Bedding Material Limits
See Std C-13.15.

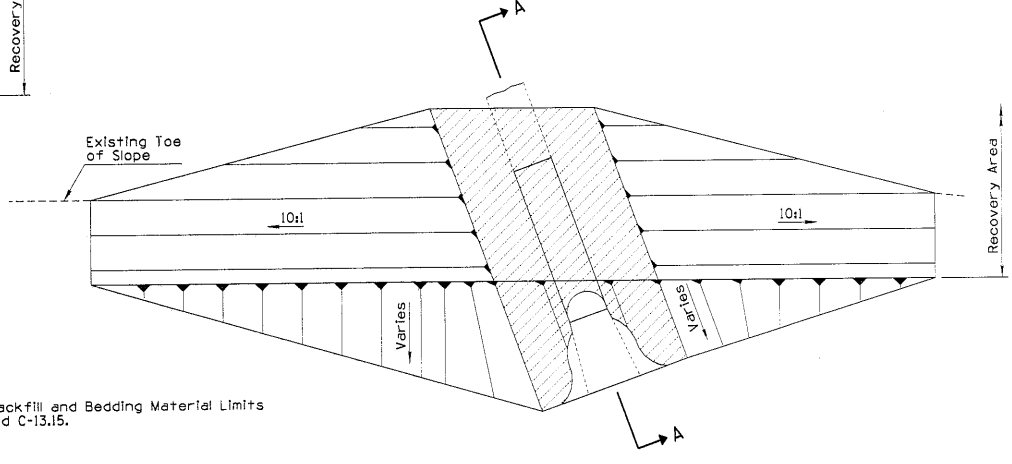

SKEWED PIPE PLAN

NOTE:
Single Pipe Installation: D = Outside Diameter of Pipe
Multiple Pipe Installation: D = Outside Edge to Outside Edge of Pipes

DESIGN APPROVED Terry H. Otterness	STATE OF ARIZONA DEPARTMENT OF TRANSPORTATION DIVISION OF HIGHWAYS STANDARD DRAWINGS	3/94
APPROVED FOR DISTRIBUTION	DITCHES, CHANNELS, DIKES AND BERMS PIPE BERMS	DRAWING NO. C-03.10 Sheet 4 of 5

NO	DESCRIPTION OF REVISIONS	MADE BY	DATE
1			
2			
3			
4			

GENERAL NOTES

1. Berm construction similar for box culvert and pipe with headwall.
2. Berm construction shown is for extension of existing facilities. Berm construction similar for new facilities.

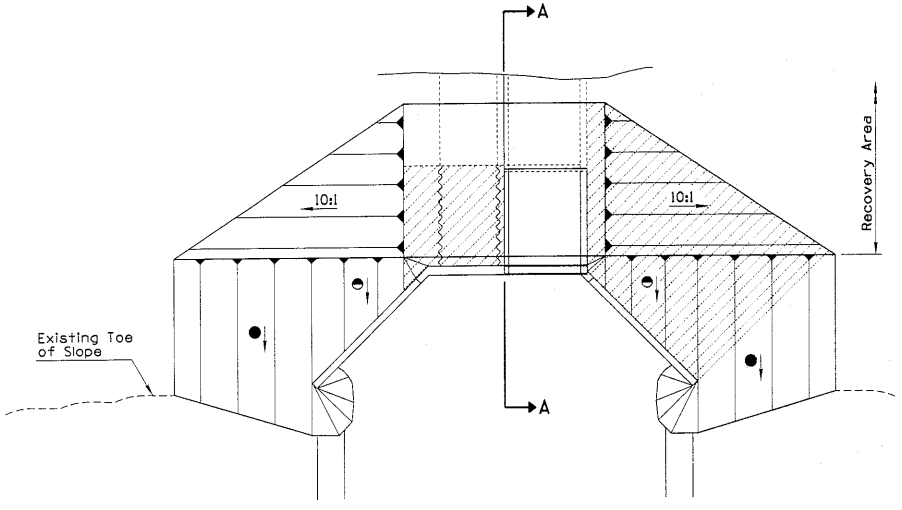

STRAIGHT HEADWALL PLAN

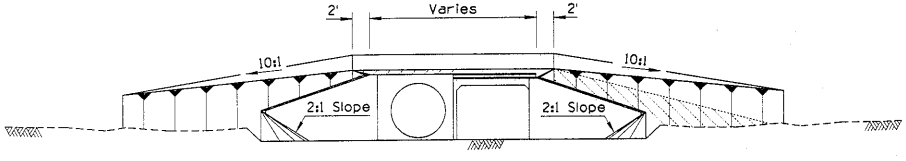

ELEVATION

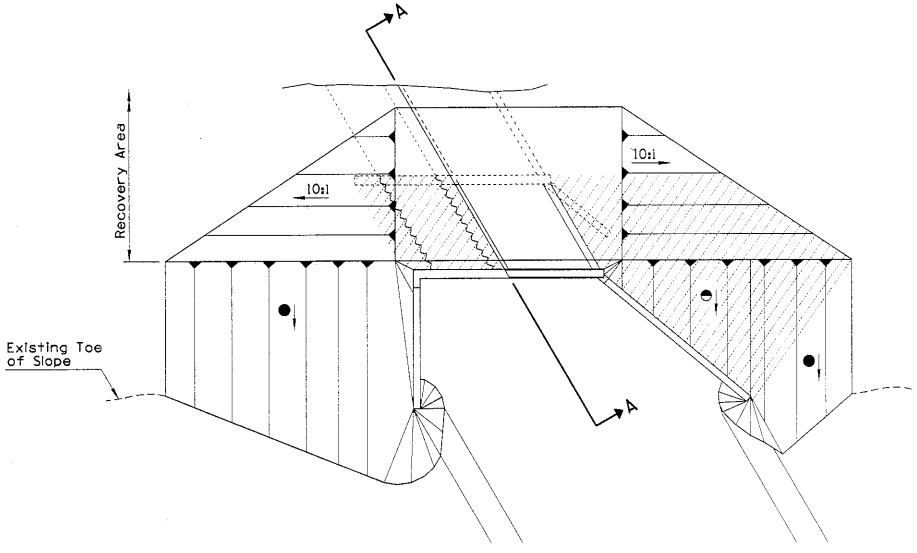

SKEWED HEADWALL PLAN

◑ Vary slope. Slope shall match to top of wing wall.

● Slope shall match wing wall design slope (2:1, 4:1, or 6:1).

▨ Structure Backfill Limits See Std B-19.50

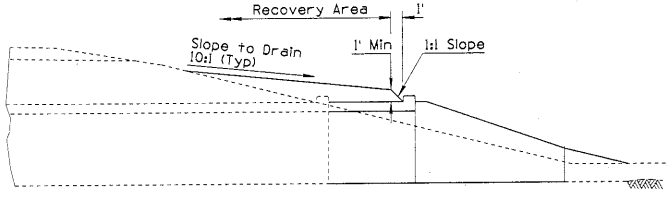

SECTION A-A (FOR CBC)

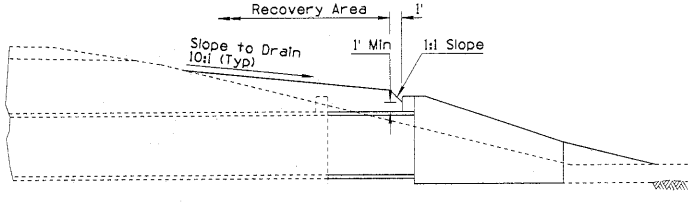

SECTION A-A (FOR PIPE WITH HEADWALL)

DESIGN APPROVED	STATE OF ARIZONA DEPARTMENT OF TRANSPORTATION DIVISION OF HIGHWAYS STANDARD DRAWINGS	3/94
APPROVED FOR DISTRIBUTION	DITCHES, CHANNELS, DIKES AND BERMS HEADWALL BERMS	DRAWING NO. C-03.10 Sheet 5 of 5

NO	DESCRIPTION OF REVISIONS	MADE BY	DATE
1	ADDED NOTE	PNB	3/94
2			
3			
4			

GENERAL NOTES

1. Top of curb (TC) and top of ramp elevations shown are in relation to the gutter. Gutter=0".
2. See Std C-05.10, C-05.11 and C-05.20 for joint requirements.
3. When curb heights of 6" are shown on plans, use dimensions shown in ( )'s.
4. If field modification is required, bottom width shall be 4' minimum, as per ADA requirements.

● Use type A1 curb if median is to be landscaped.

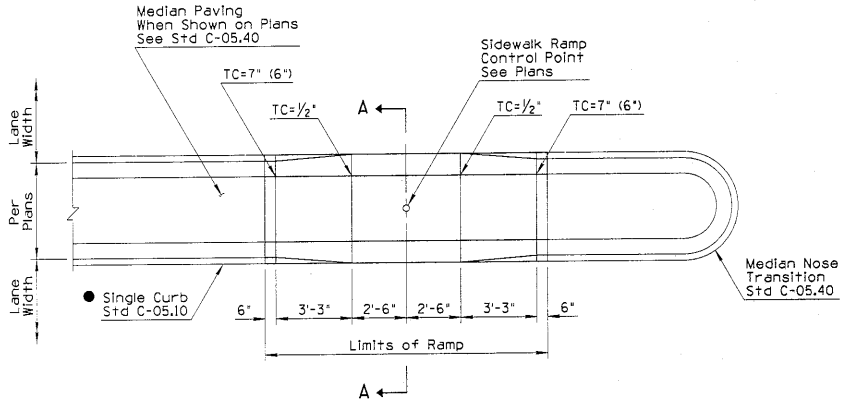

PLAN

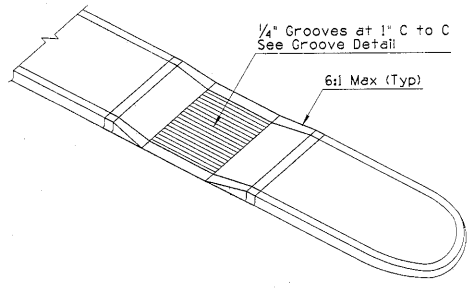

PERSPECTIVE

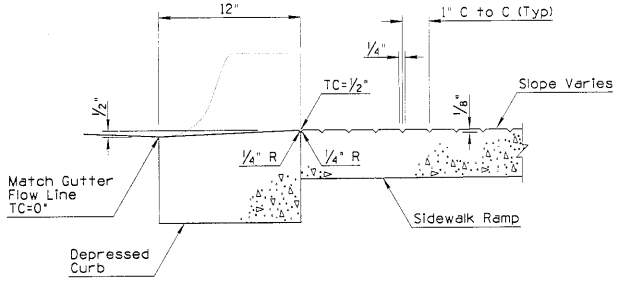

GROOVE DETAIL

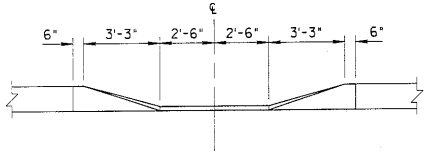

ELEVATION
DEPRESSED CURB AT SIDEWALK RAMP

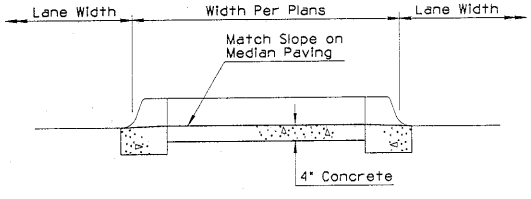

SECTION A-A

DESIGN APPROVED	STATE OF ARIZONA DEPARTMENT OF TRANSPORTATION DIVISION OF HIGHWAYS STANDARD DRAWINGS	REV. 3/94
APPROVED FOR DISTRIBUTION	SIDEWALK RAMP TYPE 1	DRAWING NO. C-05.30 Sheet 1 of 4

NO	DESCRIPTION OF REVISIONS	MADE BY	DATE
1	ADDED NOTE	PNB	3/94
2	MODIFIED NOTE	PNB	3/94
3			
4			

GENERAL NOTES

1. Top of curb (TC) and top of ramp elevations shown are in relation to the gutter and are located radially. Gutter=0".
2. See Std C-05.10, C-05.11 and C-05.20 for joint requirements.
3. (2) When curb heights of 6" or less are shown on plans, use dimensions shown in ( )'s.
4. (1) When curb heights of 7" or more are shown on plans, see plans and ADA requirements.

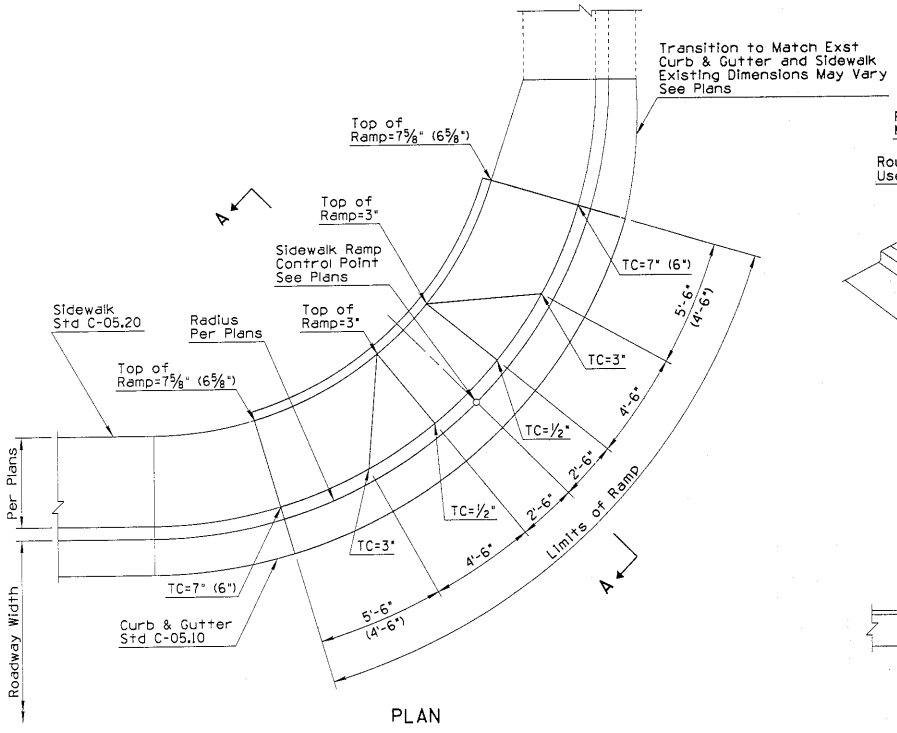

PLAN

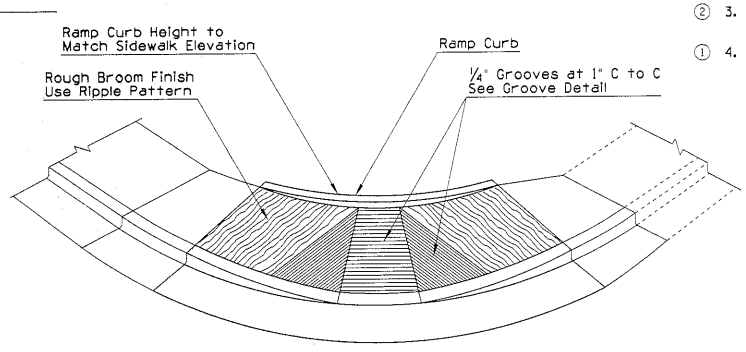

PERSPECTIVE

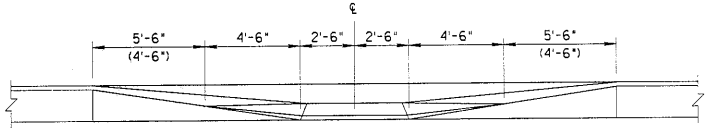

ELEVATION
DEPRESSED CURB AT SIDEWALK RAMP

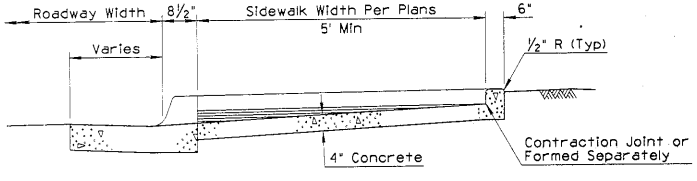

SECTION A-A

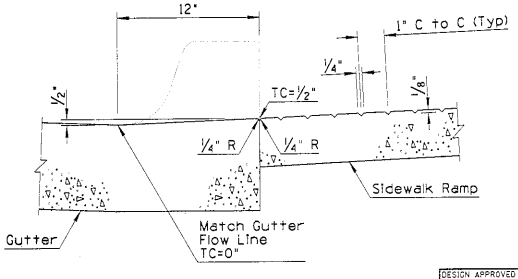

GROOVE DETAIL

DESIGN APPROVED	STATE OF ARIZONA DEPARTMENT OF TRANSPORTATION DIVISION OF HIGHWAYS STANDARD DRAWINGS	REV. 3/94
APPROVED FOR DISTRIBUTION	SIDEWALK RAMP TYPE 2	DRAWING NO. C-05.30 Sheet 2 of 4

NO	DESCRIPTION OF REVISIONS	MADE BY	DATE
1	ADDED NOTE	PNB	3/94
2	MODIFIED NOTE	PNB	3/94
3			
4			

GENERAL NOTES

1. Top of curb (TC) and top of ramp elevations shown are in relation to the gutter. Gutter=0".
2. See Std C-05.10, C-05.11 and C-05.20 for joint requirements
3. (2) When curb heights of 6" or less are shown on plans, use dimensions shown in ( )s.
4. (1) When curb heights of 7" or more are shown on plans, see plans and ADA requirements.

● For sidewalk widths greater than 6'-5", the overall sidewalk ramp width shall match the sidewalk width.

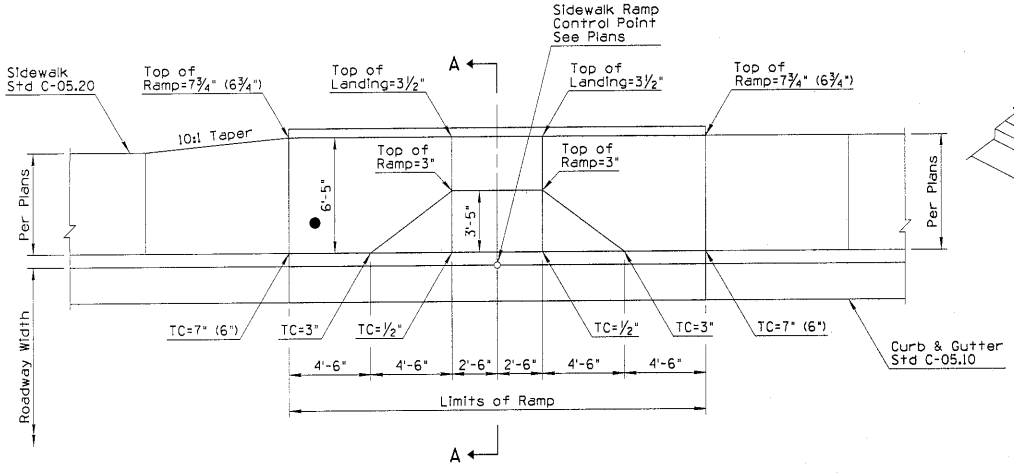

PLAN

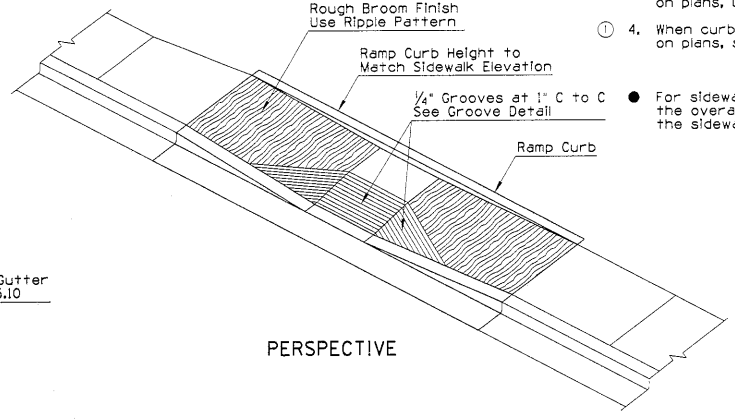

PERSPECTIVE

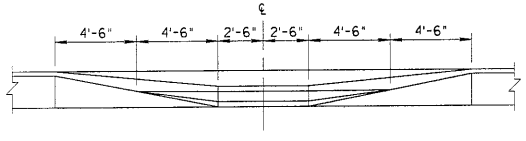

ELEVATION
DEPRESSED CURB AT SIDEWALK RAMP

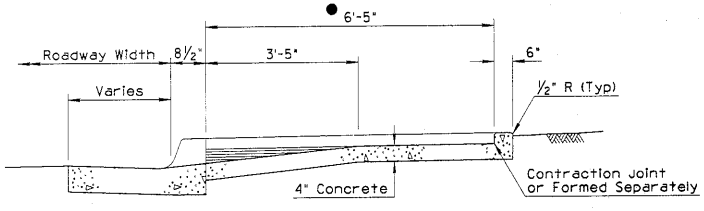

SECTION A-A

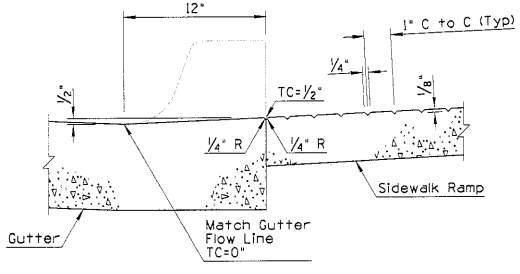

GROOVE DETAIL

DESIGN APPROVED APPROVED FOR DISTRIBUTION	STATE OF ARIZONA DEPARTMENT OF TRANSPORTATION DIVISION OF HIGHWAYS STANDARD DRAWINGS	3/94
	(1) SIDEWALK RAMP TYPE 4	DRAWING NO. C-05.30 Sheet 4 of 4

NO.	DESCRIPTION OF REVISIONS	MADE BY	DATE
1	REVISED DETAIL TO SHOW ALL PCCP	PNB	3/94
2	REVISED DETAIL TO SHOW AC & PCCP	PNB	3/94
3	DELETED EXPANSION MATERIAL	PNB	3/94
4	ADDED NOTE ON PAVEMENT SLOPE	PNB	3/94

GENERAL NOTES

(4) 1. Joints are generally shown with pavement sloping toward the joint. Joints are similar with pavement sloping away from the joint.

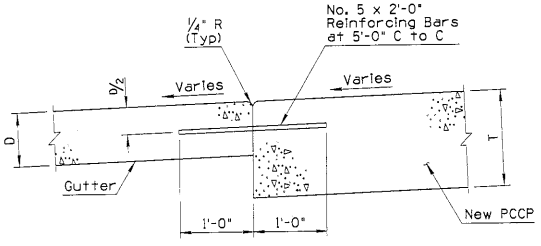

CURB & GUTTER JOINT
G Joint

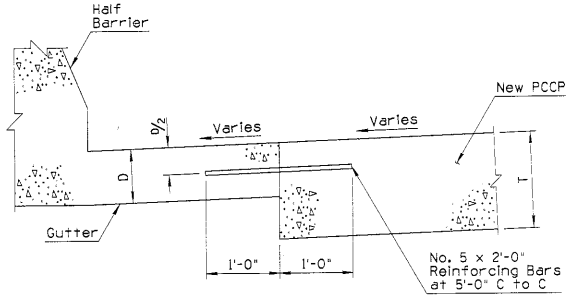

HALF BARRIER JOINT
B Joint

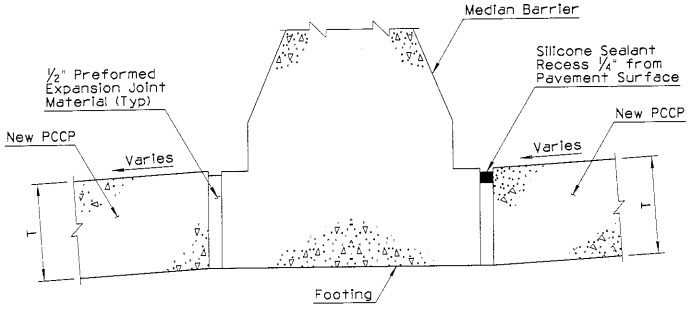

(1) MEDIAN BARRIER JOINT
B Joint
PCCP On Both Sides of Barrier

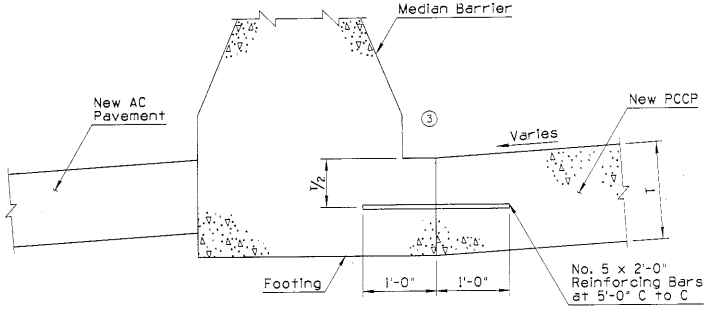

(2) MEDIAN BARRIER JOINT
B Joint
AC Pavement On Back Side of Barrier

JOINT ABBREVIATIONS

G - Gutter Joint
T - PCCP Thickness
D - Gutter Thickness
B - Barrier Joint

DESIGN APPROVED	STATE OF ARIZONA DEPARTMENT OF TRANSPORTATION DIVISION OF HIGHWAYS STANDARD DRAWINGS	3/94
APPROVED FOR DISTRIBUTION	PCCP JOINTS	DRAWING NO. C-07.01 Sheet 2 of 2

NO	DESCRIPTION OF REVISIONS	MADE BY	DATE
1	NEW STD FROM C-10.23 & C-10.24	PNB	3/94
2			
3			
4			

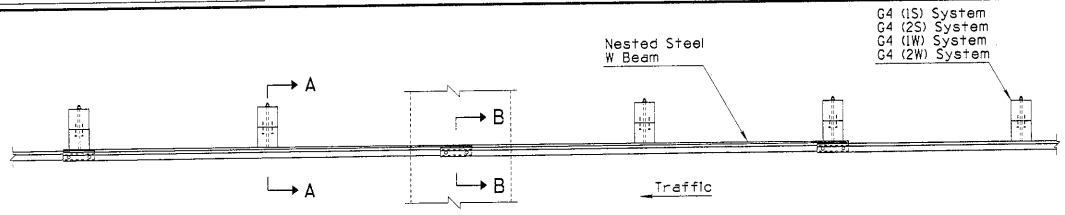

PLAN

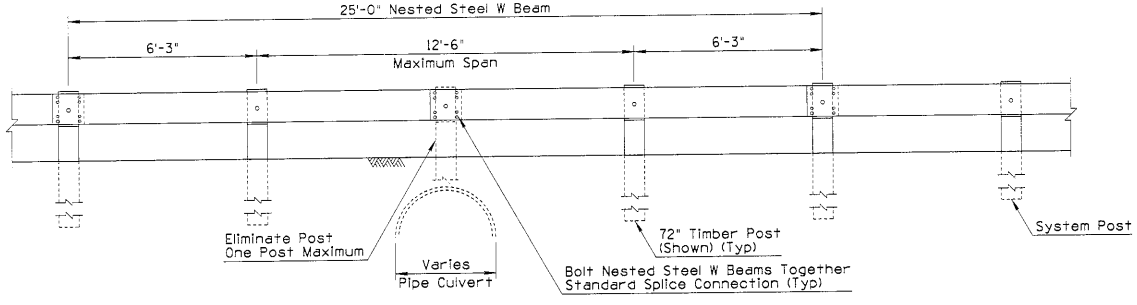

ELEVATION
NESTED STEEL W BEAM - TYPE 1 - SHORT SPAN
(Splice Connection Inside Span) Length = 25'-0"

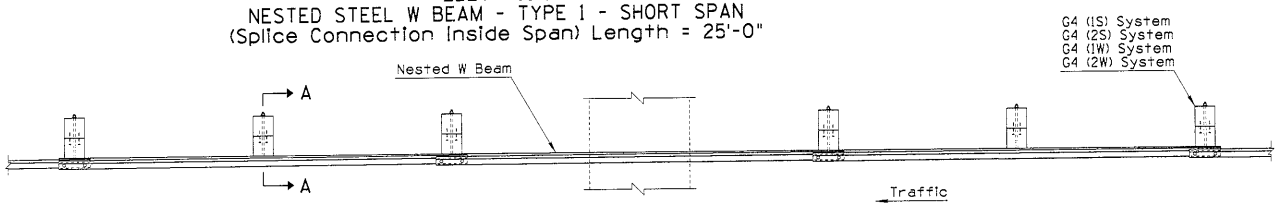

PLAN

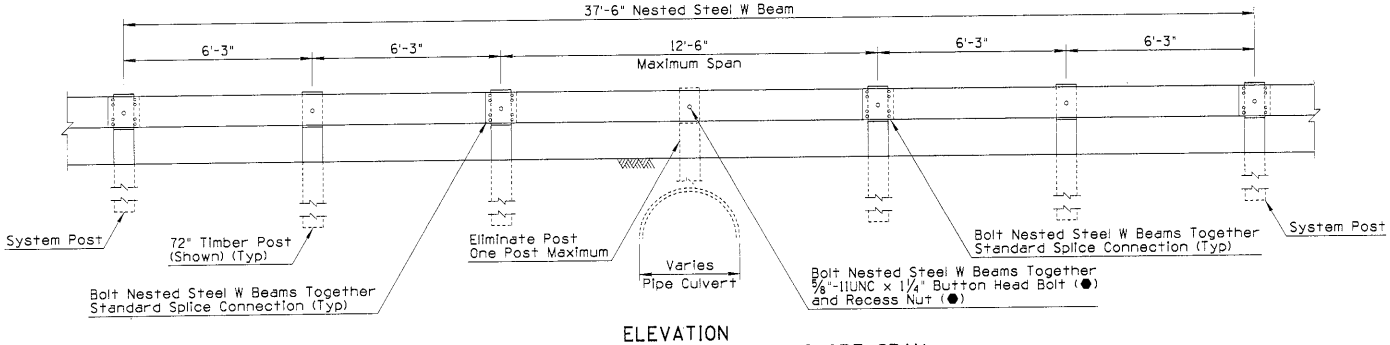

ELEVATION
NESTED STEEL W BEAM - TYPE 2 - SHORT SPAN
(Splice Connection Outside Span) Length = 37'-6"

GENERAL NOTES

1. ● - Indicates ARTBA designation.
2. See Std C-10.04 and C-10.05 for additional information and dimensions.

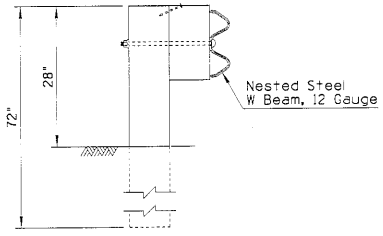

SECTION A-A

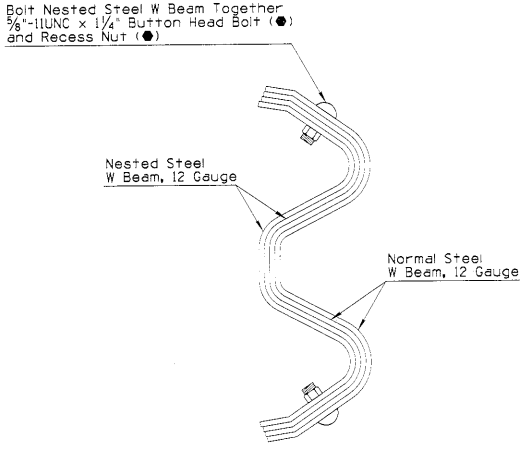

SECTION B-B

DESIGN APPROVED APPROVED FOR DISTRIBUTION	STATE OF ARIZONA DEPARTMENT OF TRANSPORTATION DIVISION OF HIGHWAYS STANDARD DRAWINGS	3/94
	1 NESTED STEEL W BEAM SHORT SPAN - TYPE 1 AND 2	DRAWING NO. C-10.28 Sheet 1 of 2

NO.	DESCRIPTION OF REVISIONS	MADE BY	DATE
1	NEW STD FROM C-10.23 & C-10.24	PNB	3/94
2			
3			
4			

GENERAL NOTES

1. Use Type 3 Nested Steel W Beam to span downdrain or spillway inlets as shown in the plan view.
2. Use Type 3 to span multiple obstructions as shown in the elevation view.

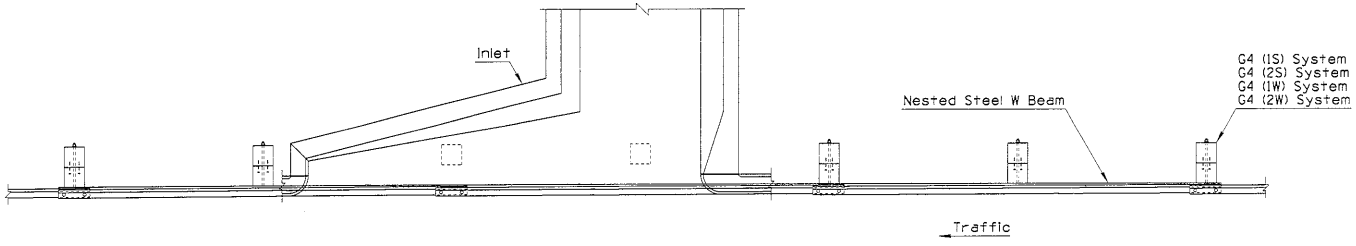

PLAN

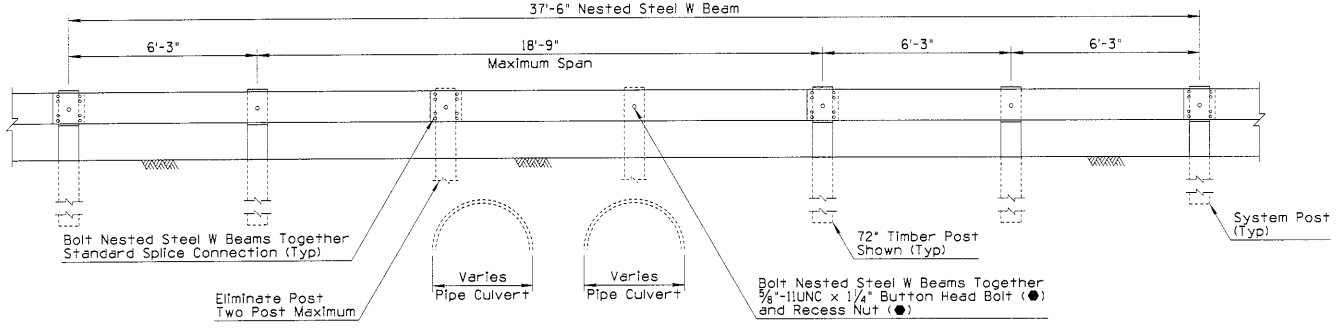

ELEVATION

NESTED STEEL W BEAM - TYPE 3 - LONG SPAN
Length = 37'-6"

DESIGN APPROVED	STATE OF ARIZONA DEPARTMENT OF TRANSPORTATION DIVISION OF HIGHWAYS STANDARD DRAWINGS	3/94
APPROVED FOR DISTRIBUTION	1 NESTED STEEL W BEAM LONG SPAN - TYPE 3	DRAWING NO. C-10.28 Sheet 2 of 2

NO	DESCRIPTION OF REVISIONS	MADE BY	DATE
1	NEW STD FROM C-10.23 & C-10.24	PNB	3/94
2			
3			
4			

GENERAL NOTES

1. See Std C-10.04 and C-10.05 for additional information and dimensions.

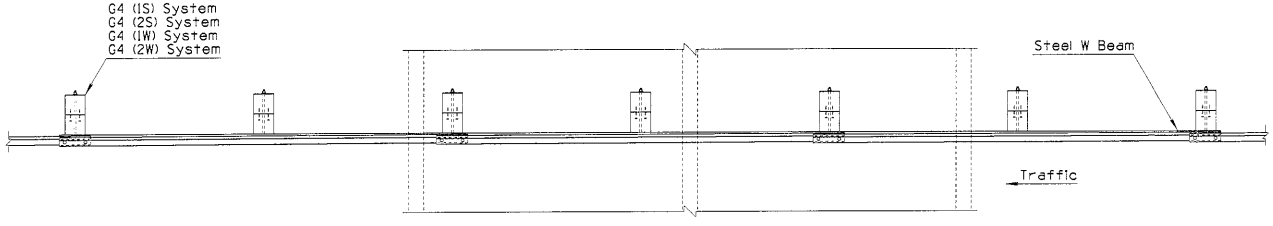

PLAN

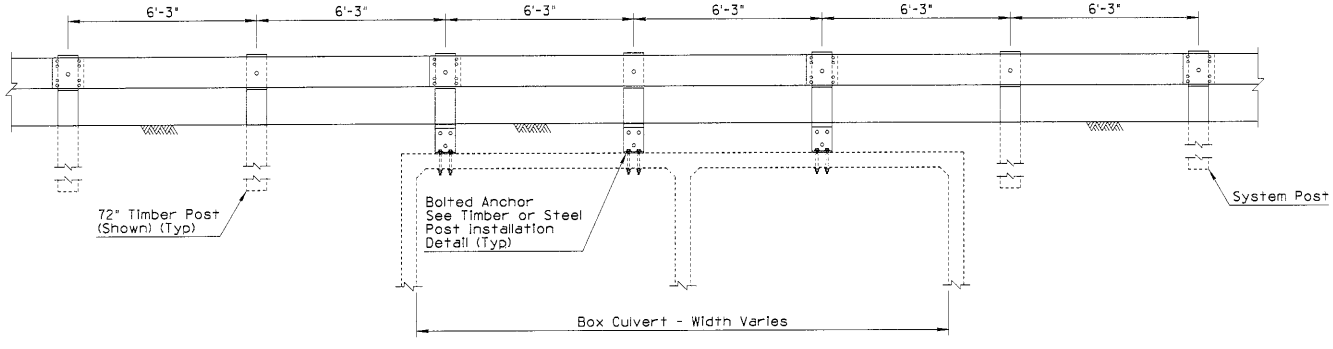

ELEVATION

BOLTED ANCHOR
BOX CULVERT INSTALLATION

DESIGN APPROVED Terry H. Otterness	STATE OF ARIZONA DEPARTMENT OF TRANSPORTATION DIVISION OF HIGHWAYS STANDARD DRAWINGS	3/94
APPROVED FOR DISTRIBUTION	① BOLTED ANCHOR GUARD RAIL	DRAWING NO. C-10.29 Sheet 1 of 2

NO.	DESCRIPTION OF REVISIONS	MADE BY	DATE
1	NEW STD FROM C-10.23 & C-10.24	PNB	3/94
2			
3			
4			

GENERAL NOTES

1. Drill through top of box culvert with rotary drill.
2. Bracket may be made of one piece hot bent, or two pieces welded together.
3. Short timber posts anchored to box culvert roof shall be 8" x 8" only.

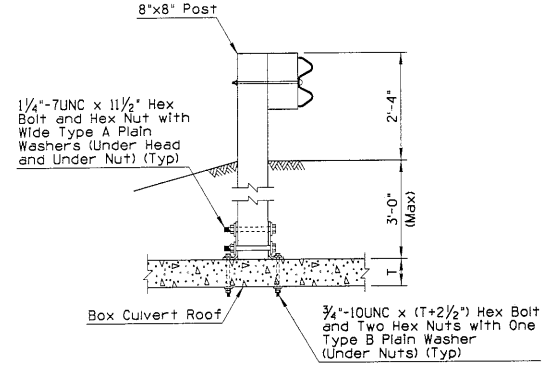

INSTALLATION DETAIL

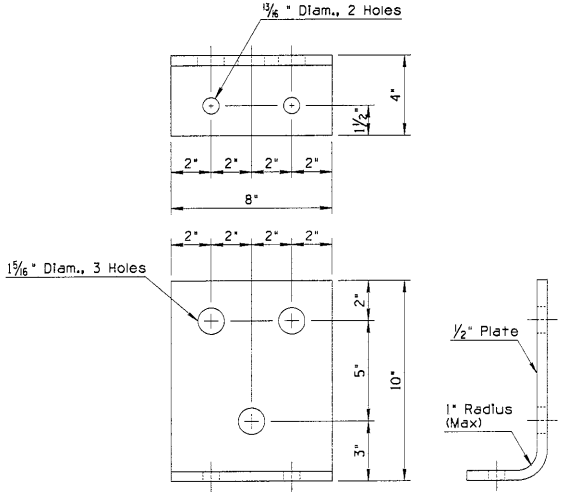

BRACKET DETAIL

BOLTED ANCHOR
TIMBER POST INSTALLATION DETAIL

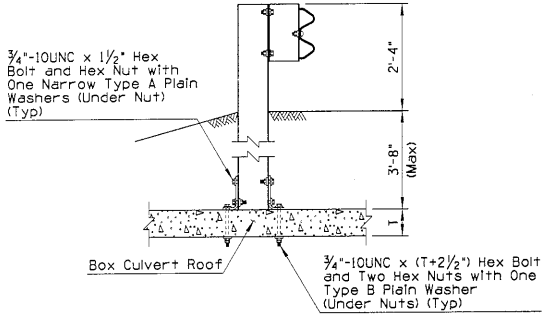

INSTALLATION DETAIL

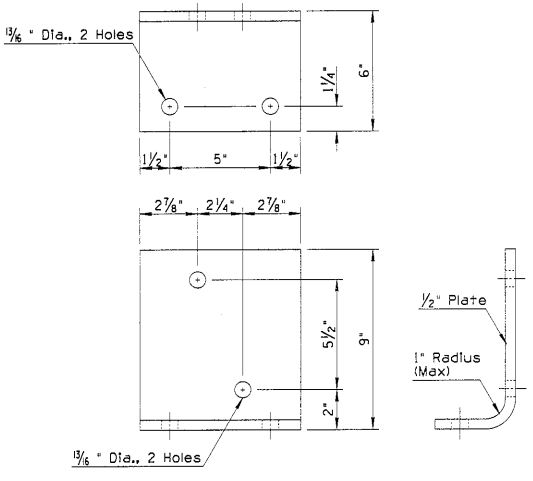

BRACKET DETAIL

BOLTED ANCHOR
STEEL POST INSTALLATION DETAIL

DESIGN APPROVED Terry H. Otterness	STATE OF ARIZONA DEPARTMENT OF TRANSPORTATION DIVISION OF HIGHWAYS STANDARD DRAWINGS	3/94
APPROVED FOR DISTRIBUTION (1)	BOLTED ANCHOR GUARD RAIL	DRAWING NO. C-10.29 Sheet 2 of 2

NO.	DESCRIPTION OF REVISIONS	MADE BY	DATE
1			
2			
3			
4			

GENERAL NOTES

● - indicates ARTBA designation

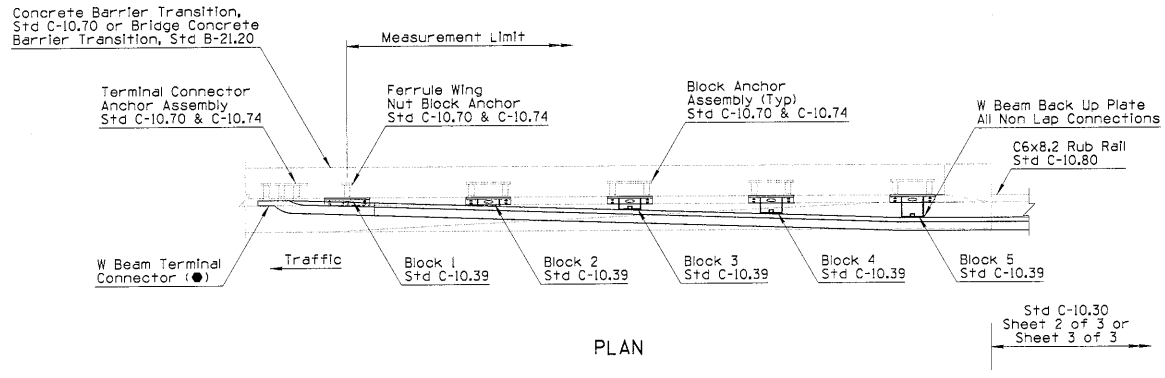

PLAN

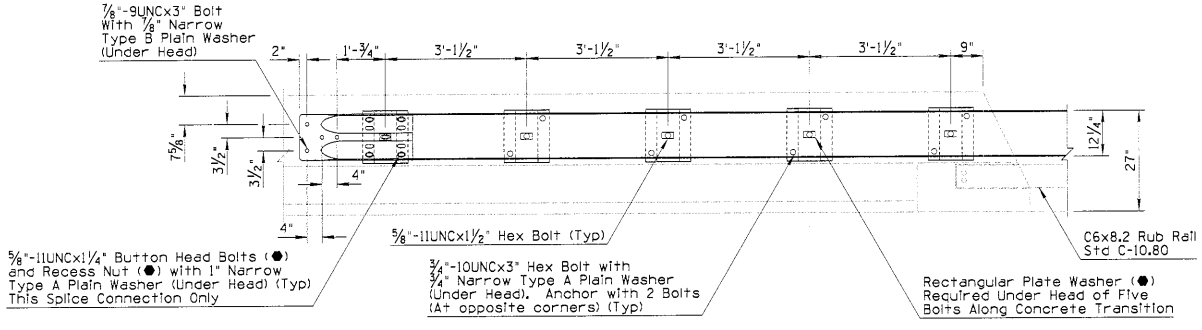

ELEVATION

Guard Rail Transition

Note:
For Notes and Dimensions Not Shown,
See Guard Rail Transition Above

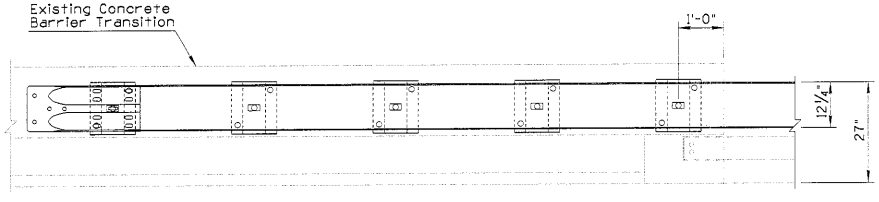

ELEVATION

Guard Rail Transition
To Existing Concrete
Barrier Transition

DESIGN APPROVED	STATE OF ARIZONA DEPARTMENT OF TRANSPORTATION DIVISION OF HIGHWAYS STANDARD DRAWINGS	3/94
APPROVED FOR DISTRIBUTION	GUARD RAIL TRANSITION W BEAM TO CONCRETE HALF BARRIER (APPROACH)	DRAWING NO. C-10.30 Sheet 1 of 3

NO	DESCRIPTION OF REVISIONS	MADE BY	DATE
1			
2			
3			
4			

GENERAL NOTES

● - Indicates ARTBA designation

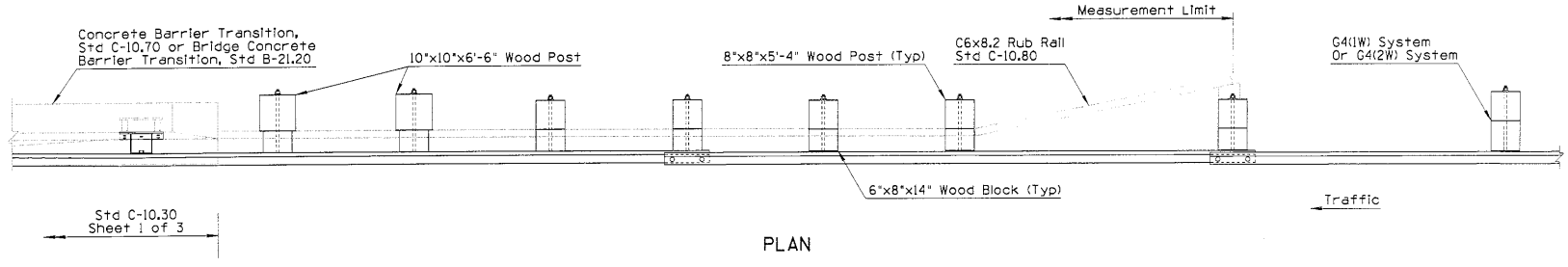

PLAN

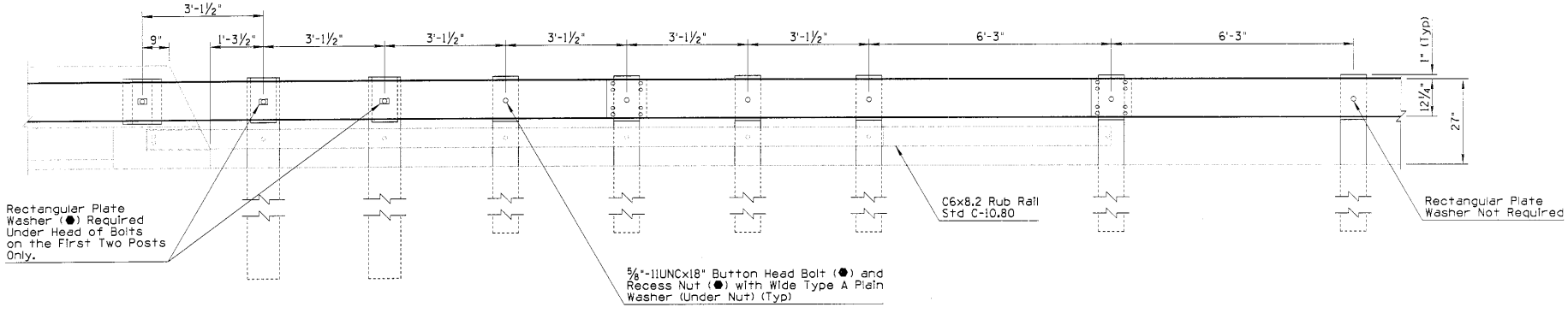

ELEVATION

Guard Rail Transition (Timber Post)

Note:
For Notes and Dimensions Not Shown, See Guard Rail Transition Above.

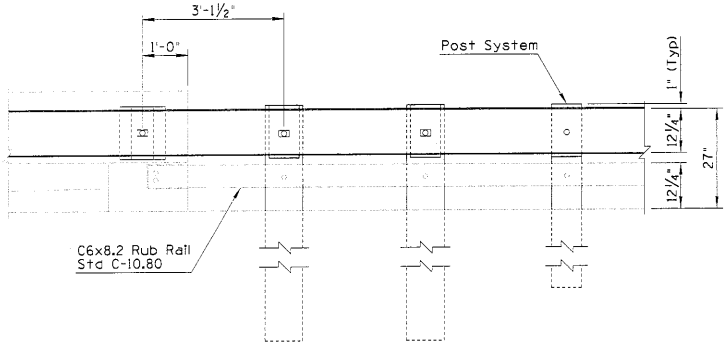

ELEVATION

Guard Rail Transition To Existing Concrete Barrier Transition

DESIGN APPROVED Terry H. Otterness	STATE OF ARIZONA DEPARTMENT OF TRANSPORTATION DIVISION OF HIGHWAYS STANDARD DRAWINGS	3/94
APPROVED FOR DISTRIBUTION	GUARD RAIL TRANSITION W BEAM TO CONCRETE HALF BARRIER (APPROACH)	DRAWING NO. C-10.30 Sheet 2 of 3

NO.	DESCRIPTION OF REVISIONS	MADE BY	DATE
1			
2			
3			
4			

GENERAL NOTES

● - Indicates ARTBA designation

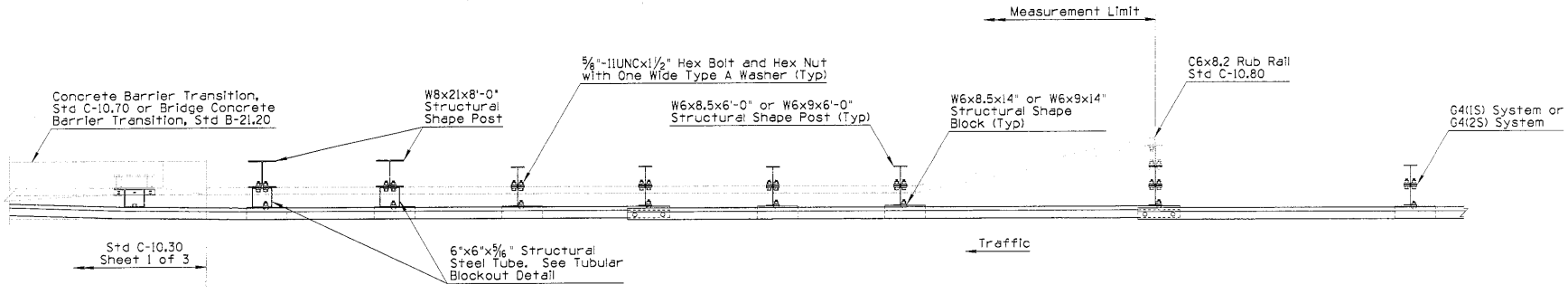

PLAN

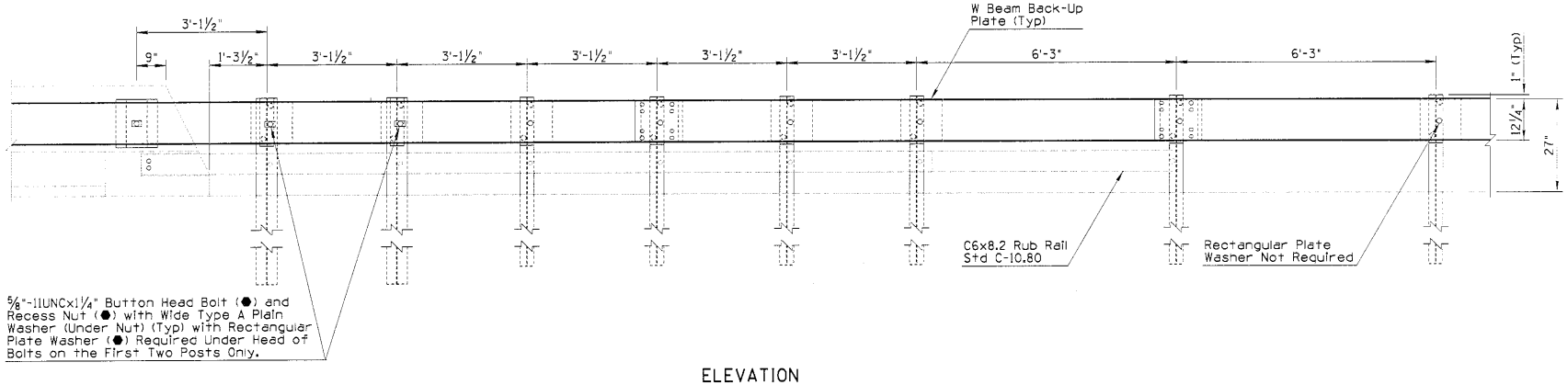

ELEVATION

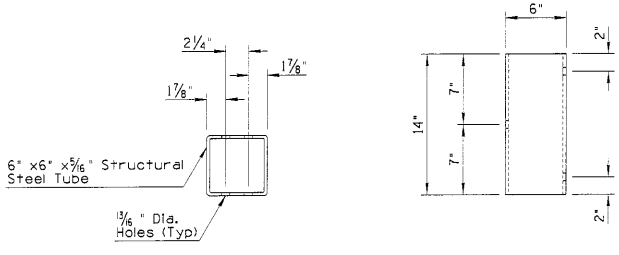

TUBULAR BLOCKOUT DETAIL

Guard Rail Transition (Steel Post)

DESIGN APPROVED APPROVED FOR DISTRIBUTION	STATE OF ARIZONA DEPARTMENT OF TRANSPORTATION DIVISION OF HIGHWAYS STANDARD DRAWINGS	3/94
	GUARD RAIL TRANSITION, W BEAM TO CONCRETE HALF BARRIER (APPROACH)	DRAWING NO. C-10.30 Sheet 3 of 3

NO	DESCRIPTION OF REVISIONS	MADE BY	DATE
1			
2			
3			
4			

GENERAL NOTES

● - Indicates ARTBA designation

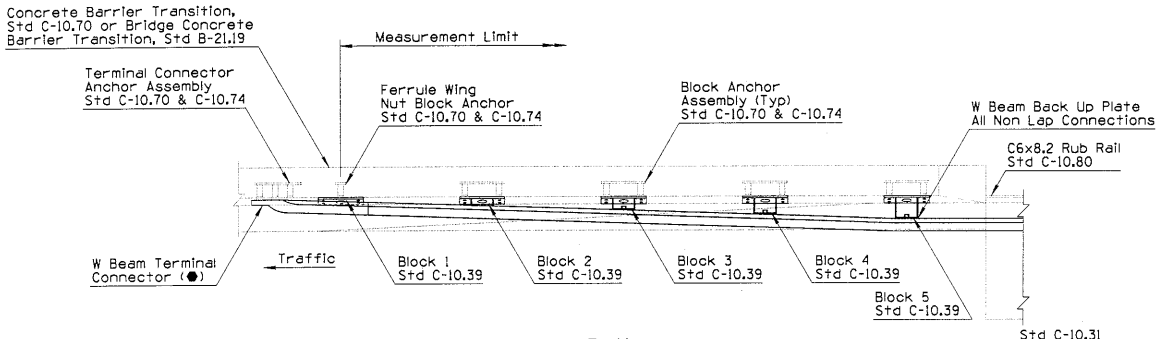

PLAN

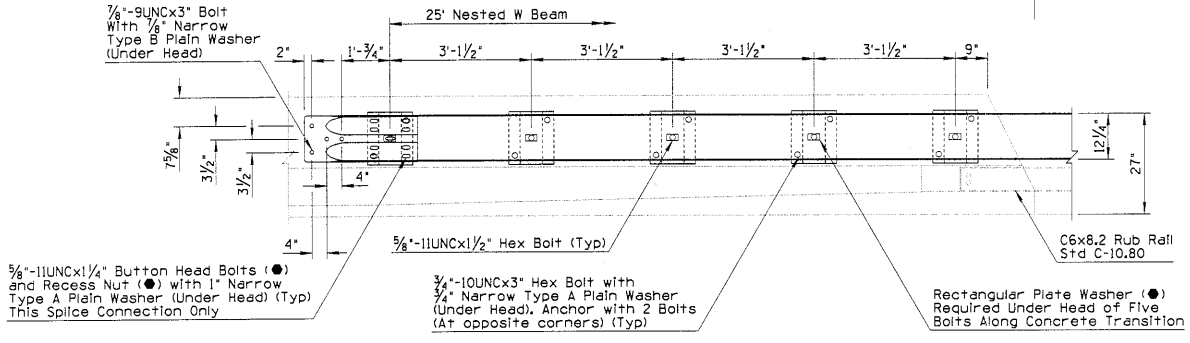

ELEVATION

Guard Rail Transition

Note:
For Notes and Dimensions Not Shown, See Guard Rail Transition Above

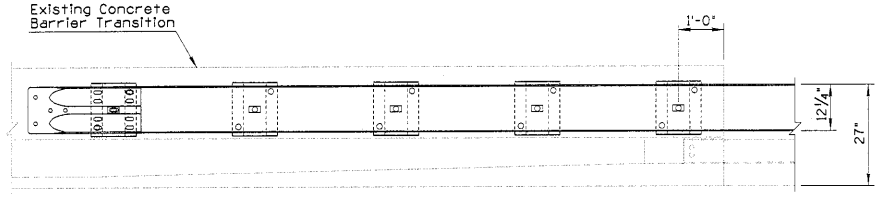

ELEVATION

Guard Rail Transition To Existing Concrete Barrier Transition

DESIGN APPROVED	STATE OF ARIZONA DEPARTMENT OF TRANSPORTATION DIVISION OF HIGHWAYS STANDARD DRAWINGS	3/94
APPROVED FOR DISTRIBUTION	GUARD RAIL TRANSITION W BEAM TO CONCRETE HALF BARRIER (APPROACH)(WITH CURB)	DRAWING NO. C-10.31 Sheet 1 of 3

NO	DESCRIPTION OF REVISIONS	MADE BY	DATE
1			
2			
3			
4			

GENERAL NOTES

● - Indicates ARTBA designation

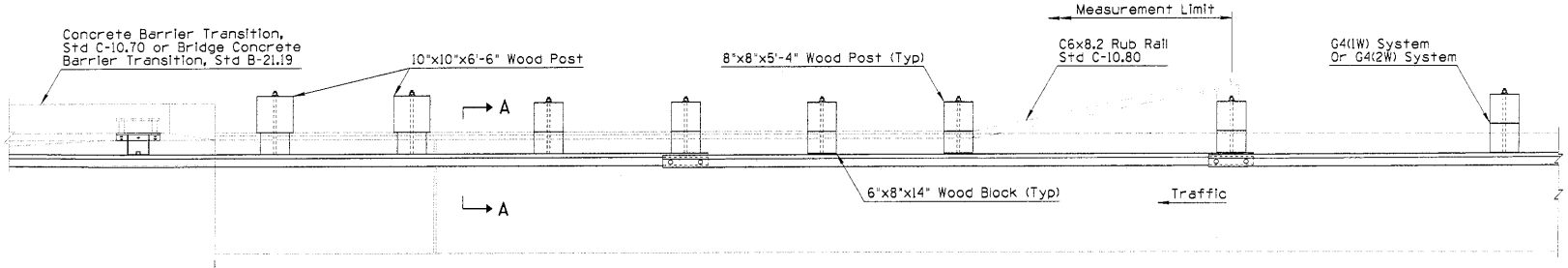

PLAN

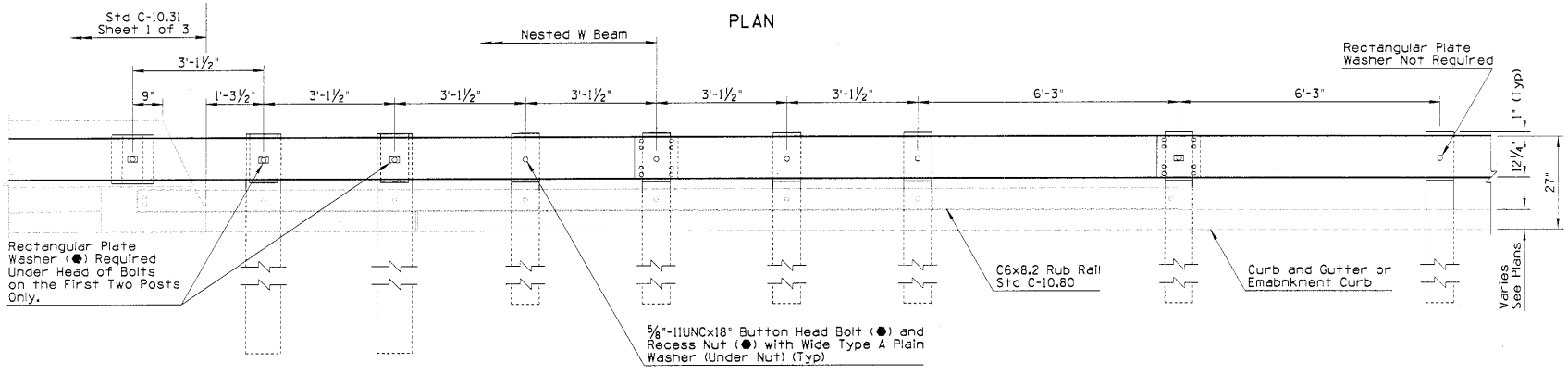

ELEVATION

Guard Rail Transition (Timber Post)

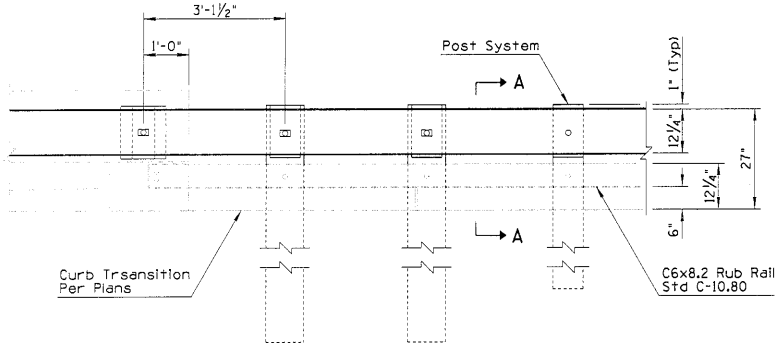

ELEVATION

Note:
For Notes and Dimensions Not Shown, See Guard Rail Transition Above.

Guard Rail Transition To Existing Concrete Barrier Transition

Note:
Curb Height Shall Not Exceed 6" When Adjacent to Rub Rail.

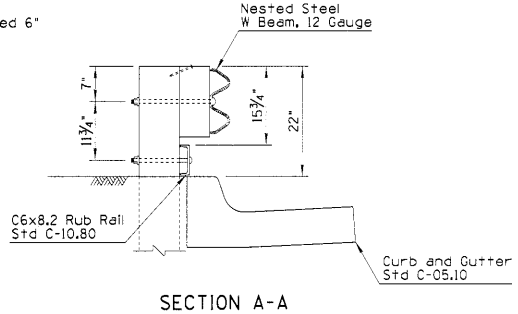

SECTION A-A

DESIGN APPROVED	STATE OF ARIZONA DEPARTMENT OF TRANSPORTATION DIVISION OF HIGHWAYS STANDARD DRAWINGS	3/94
APPROVED FOR DISTRIBUTION	GUARD RAIL TRANSITION W BEAM TO CONCRETE HALF BARRIER (APPROACH) (WITH CURB)	DRAWING NO. C-10.31 Sheet 2 of 3

NO	DESCRIPTION OF REVISIONS	MADE BY	DATE
1			
2			
3			
4			

GENERAL NOTES

● - Indicates ARTBA designation

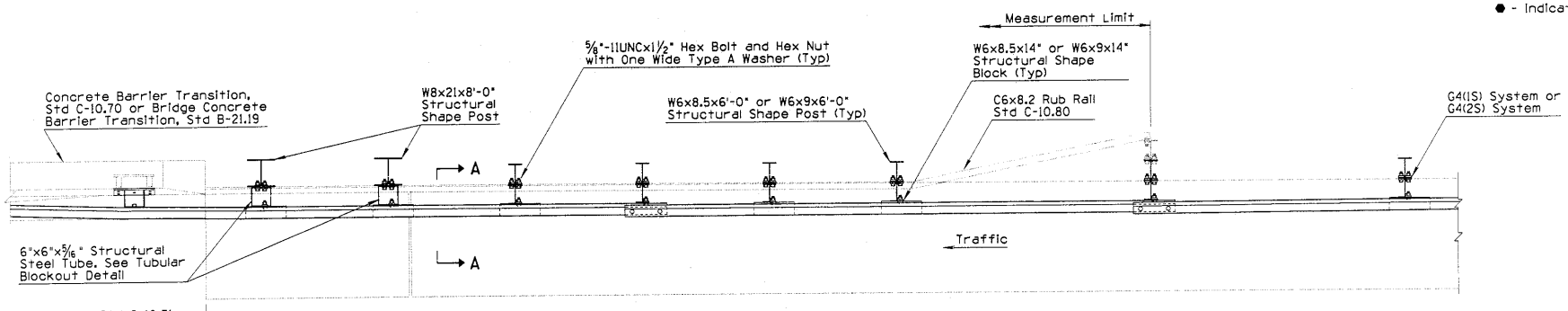

PLAN

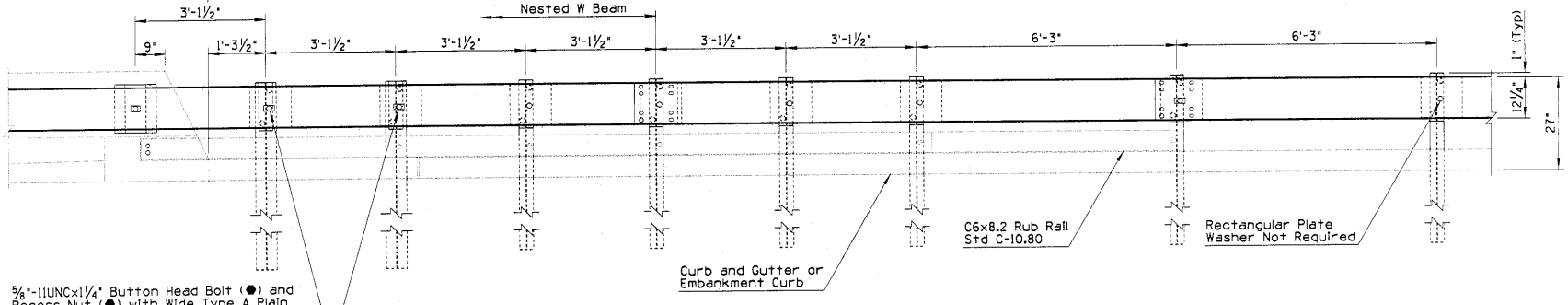

ELEVATION

Guard Rail Transition (Steel Post)

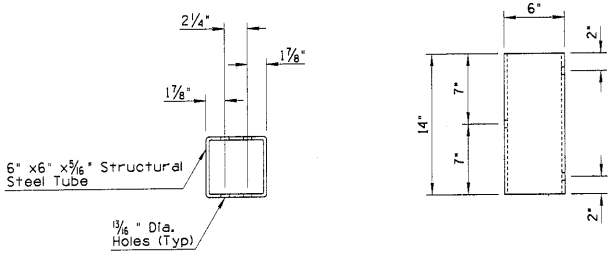

TUBULAR BLOCKOUT DETAIL

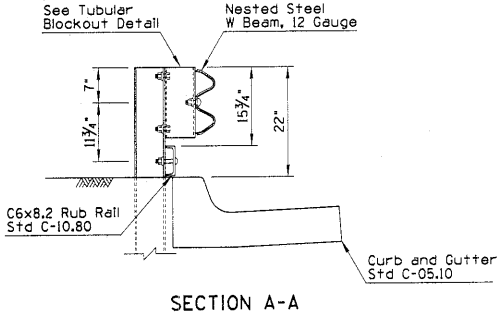

SECTION A-A

Note:
Curb Height Shall Not Exceed 6" When Adjacent to Rub Rail.

DESIGN APPROVED	STATE OF ARIZONA DEPARTMENT OF TRANSPORTATION DIVISION OF HIGHWAYS STANDARD DRAWINGS	3/94
APPROVED FOR DISTRIBUTION	GUARD RAIL TRANSITION, W BEAM TO CONCRETE HALF BARRIER (APPROACH) (WITH CURB)	DRAWING NO. C-10.31 Sheet 3 of 3

NO.	DESCRIPTION OF REVISIONS	MADE BY	DATE
1			
2			
3			
4			

GENERAL NOTES

1. For use with one-way traffic or with two-way traffic outside the clear zone.

● - Indicates ARTBA designation

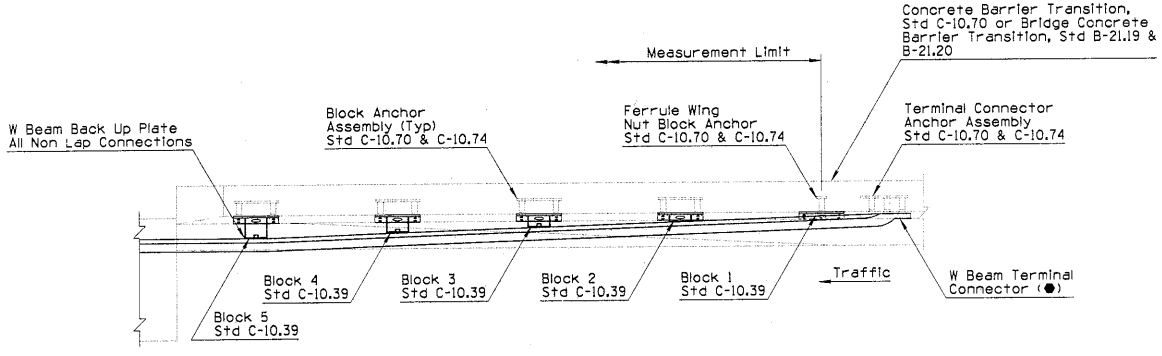

PLAN

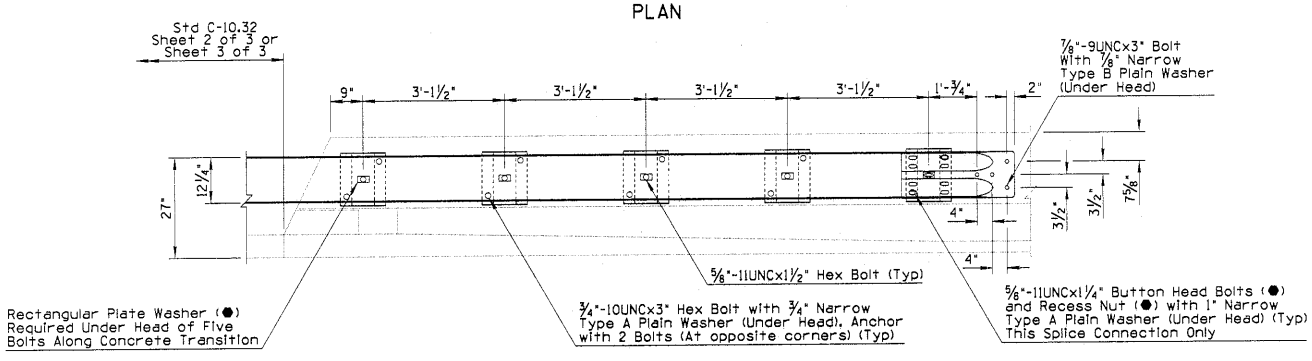

ELEVATION

Guard Rail Transition

Note:
For Notes and Dimensions Not Shown, See Guard Rail Transition Above

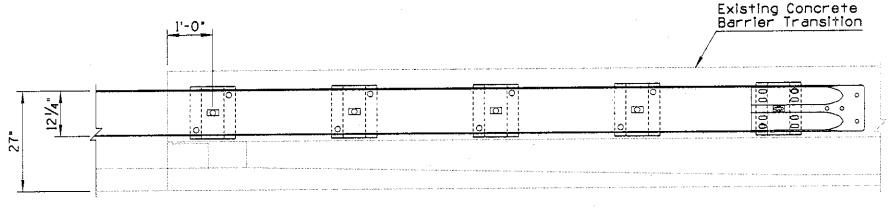

ELEVATION

Guard Rail Transition
To Existing Concrete
Barrier Transition

DESIGN APPROVED	STATE OF ARIZONA DEPARTMENT OF TRANSPORTATION DIVISION OF HIGHWAYS STANDARD DRAWINGS	3/94
APPROVED FOR DISTRIBUTION	GUARD RAIL TRANSITION W BEAM TO CONCRETE HALF BARRIER (DEPARTURE)	DRAWING NO. C-10.32 Sheet 1 of 3

NO	DESCRIPTION OF REVISIONS	MADE BY	DATE
1			
2			
3			
4			

GENERAL NOTES

● - Indicates ARTBA designation

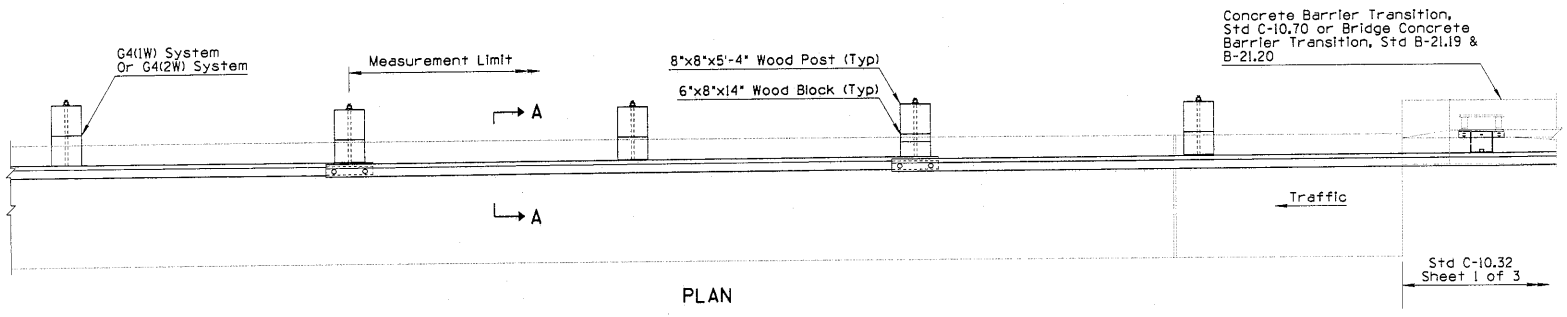

PLAN

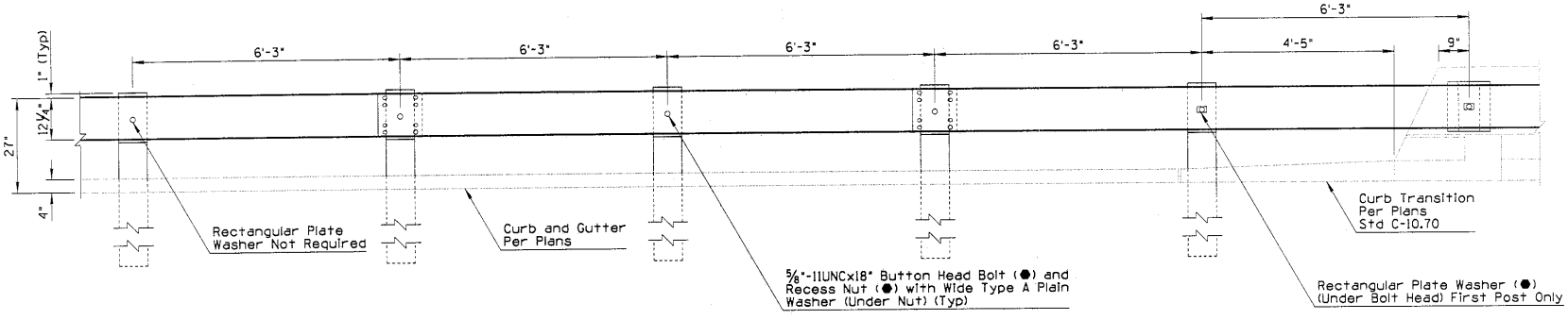

ELEVATION

Guard Rail Transition
(Timber Post)

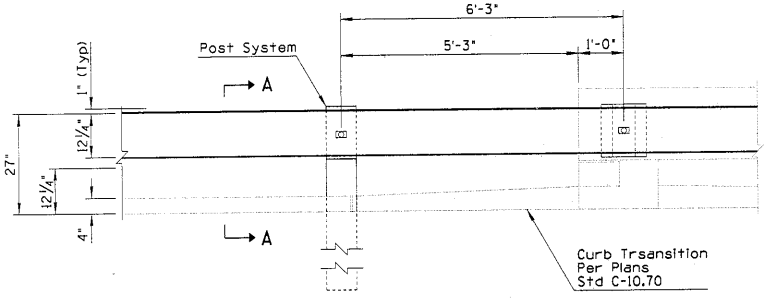

ELEVATION

Note:
For Notes and Dimensions Not Shown,
See Guard Rail Transition Above.

Guard Rail Transition
To Existing Concrete
Barrier Transition

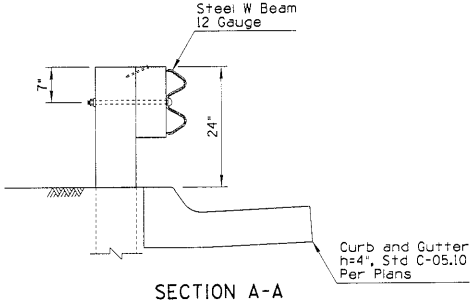

SECTION A-A

DESIGN APPROVED	STATE OF ARIZONA DEPARTMENT OF TRANSPORTATION DIVISION OF HIGHWAYS STANDARD DRAWINGS	3/94
APPROVED FOR DISTRIBUTION	GUARD RAIL TRANSITION W BEAM TO CONCRETE HALF BARRIER (DEPARTURE)	DRAWING NO. C-10.32 Sheet 2 of 3

NO	DESCRIPTION OF REVISIONS	MADE BY	DATE
1			
2			
3			
4			

GENERAL NOTES

● - Indicates ARTBA designation

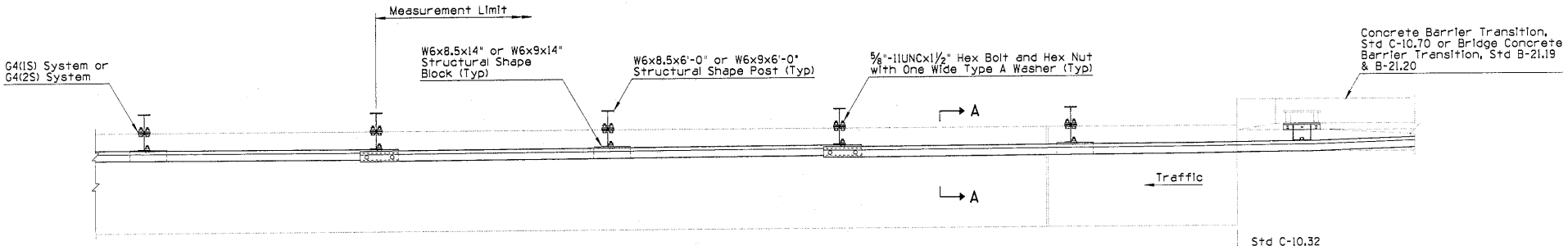

PLAN

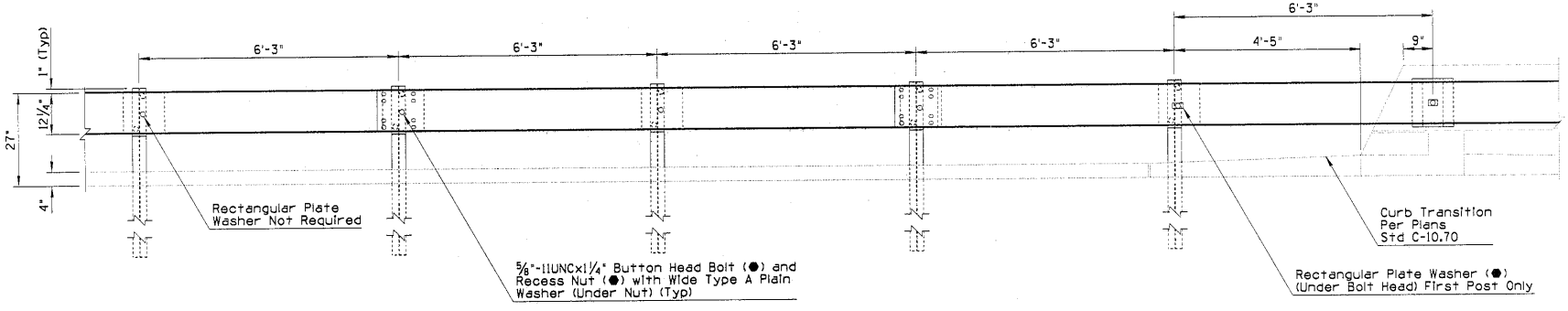

ELEVATION

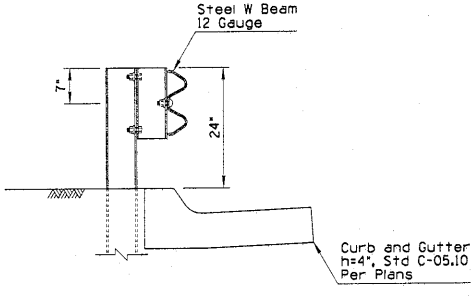

SECTION A-A

Guard Rail Transition
(Steel Post)

DESIGN APPROVED	STATE OF ARIZONA DEPARTMENT OF TRANSPORTATION DIVISION OF HIGHWAYS STANDARD DRAWINGS	3/94
APPROVED FOR DISTRIBUTION	GUARD RAIL TRANSITION, W BEAM TO CONCRETE HALF BARRIER (DEPARTURE)	DRAWING NO. C-10.32 Sheet 3 of 3

NO	DESCRIPTION OF REVISIONS	MADE BY	DATE
1			
2			
3			
4			

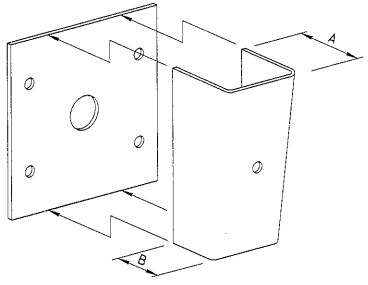

BLOCK	DIMENSION A	DIMENSION B
2	1 1/4"	7/8"
3	2 1/2"	1 3/4"
4	3 11/16"	2 5/8"
5	4 15/16"	3 7/16"

Note:
Block 1 is a 1/4"x12"x14" Plate

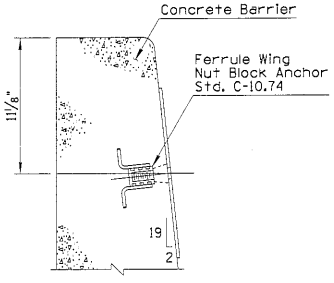

HALF BARRIER
(BLOCK 1 SHOWN)

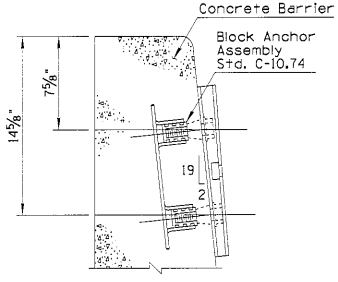

HALF BARRIER
(BLOCK 2 SHOWN)

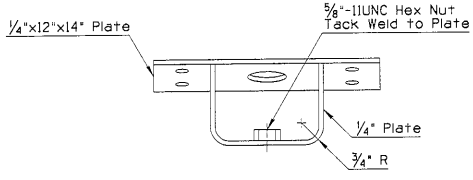

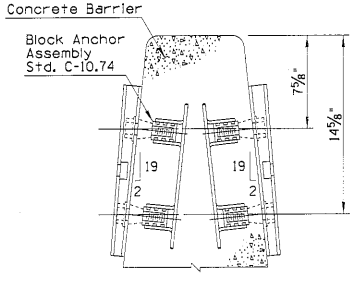

MEDIAN BARRIER
(BLOCK 2 SHOWN)

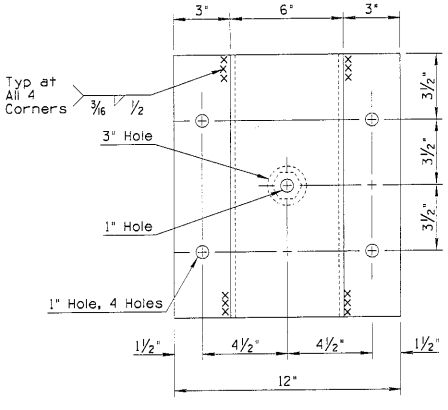

BLOCK DETAILS

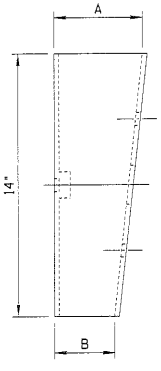

Blocks 2,3,4 and 5

BLOCK AND ANCHORAGE DETAILS

DESIGN APPROVED APPROVED FOR DISTRIBUTION	STATE OF ARIZONA DEPARTMENT OF TRANSPORTATION DIVISION OF HIGHWAYS STANDARD DRAWINGS	3/94
	HARDWARE FOR W BEAM TRANSITION TO CONCRETE BARRIER	DRAWING NO. C-10.39

NO.	DESCRIPTION OF REVISIONS	MADE BY	DATE
1			
2			
3			
4			

GENERAL NOTES

1. Concrete shall be constructed by the Fixed Form Cast-In-Place method.
2. Concrete shall be Class S, design strength f'_c = 3000 psi.

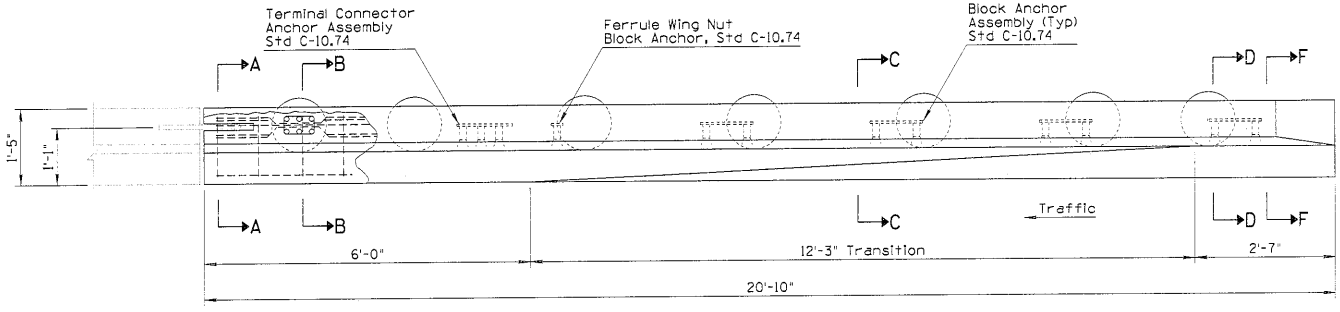

PLAN

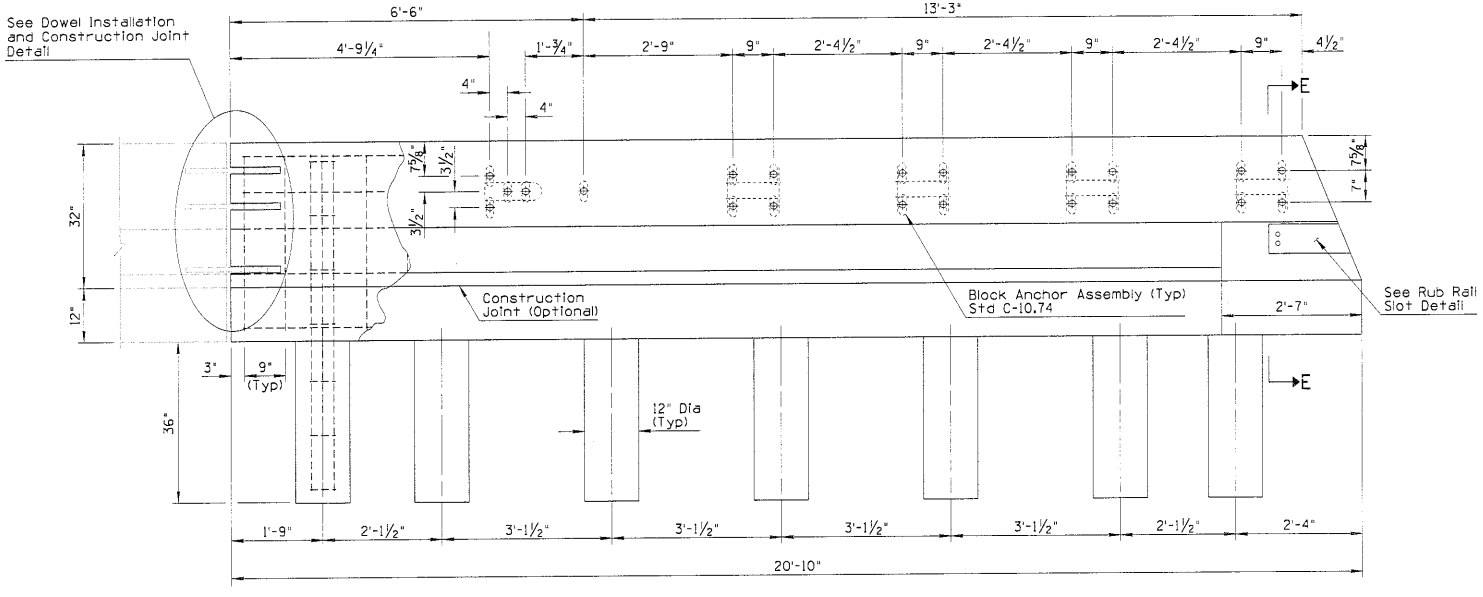

ELEVATION

BARRIER WITHOUT CURB

DESIGN APPROVED	STATE OF ARIZONA DEPARTMENT OF TRANSPORTATION DIVISION OF HIGHWAYS STANDARD DRAWINGS	3/94
APPROVED FOR DISTRIBUTION	CONCRETE HALF BARRIER TRANSITION	DRAWING NO. C-10.70 Sheet 1 of 4

NO	DESCRIPTION OF REVISIONS	MADE BY	DATE
1			
2			
3			
4			

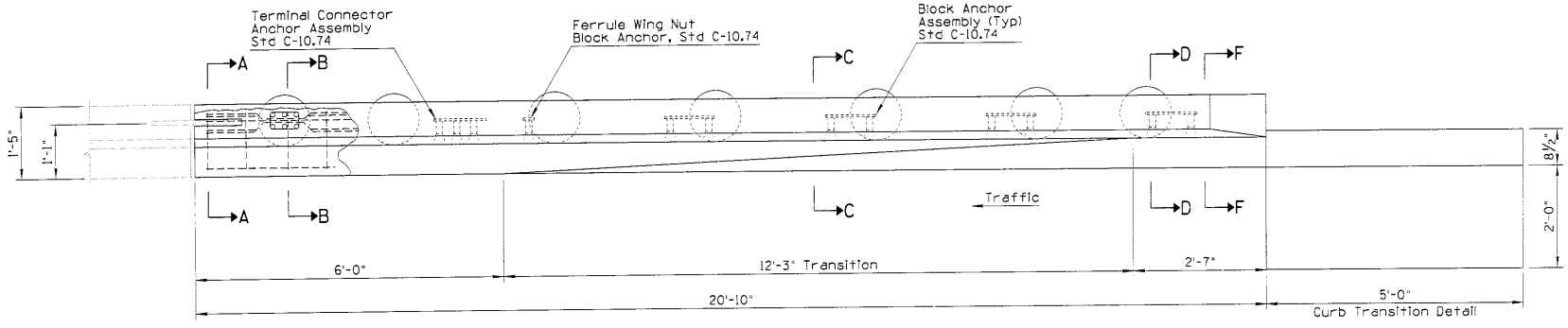

PLAN

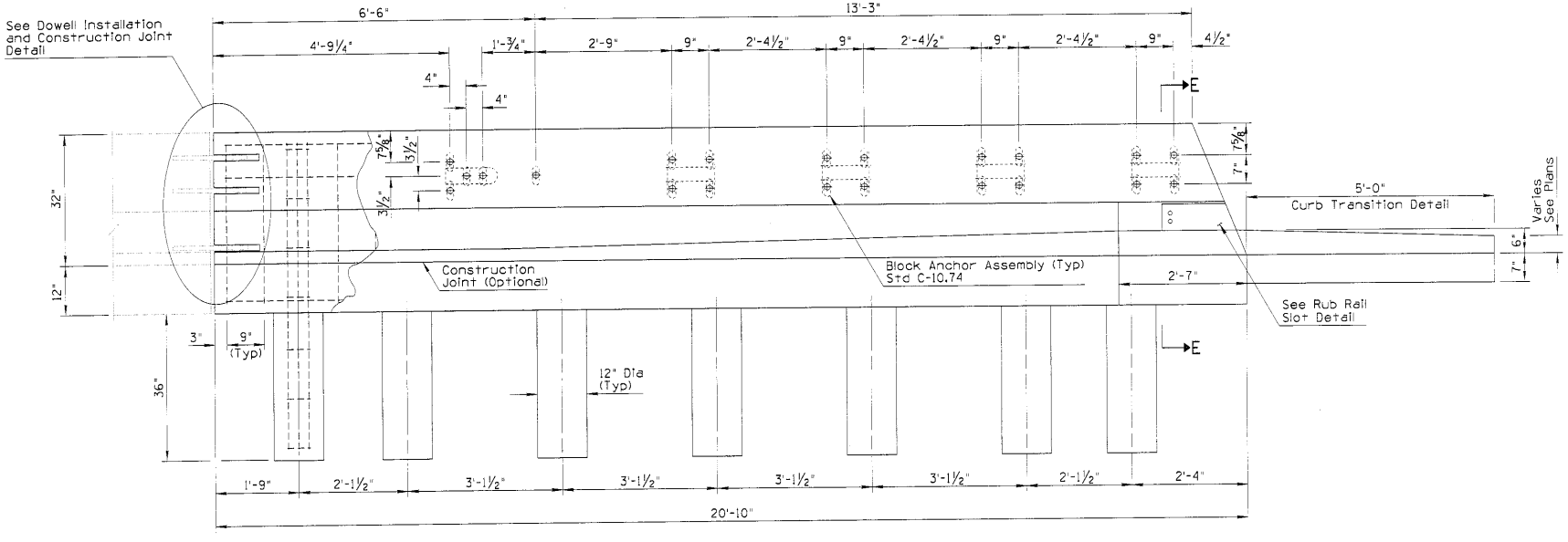

ELEVATION

BARRIER WITH CURB AND GUTTER

DESIGN APPROVED

APPROVED FOR DISTRIBUTION

STATE OF ARIZONA
DEPARTMENT OF TRANSPORTATION
DIVISION OF HIGHWAYS
STANDARD DRAWINGS

3/94

CONCRETE HALF BARRIER TRANSITION

DRAWING NO. C-10.70

Sheet 2 of 4

NO.	DESCRIPTION OF REVISIONS	MADE BY	DATE
1			
2			
3			
4			

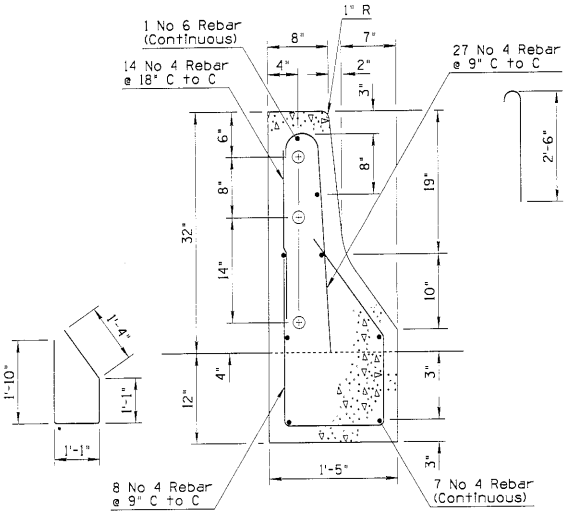

SECTION A-A

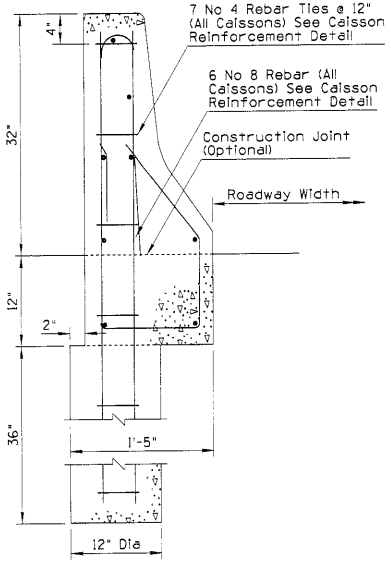

SECTION B-B

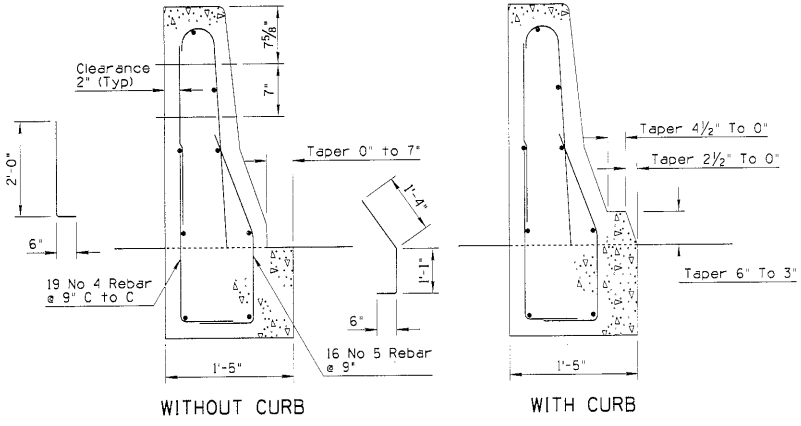

SECTION C-C

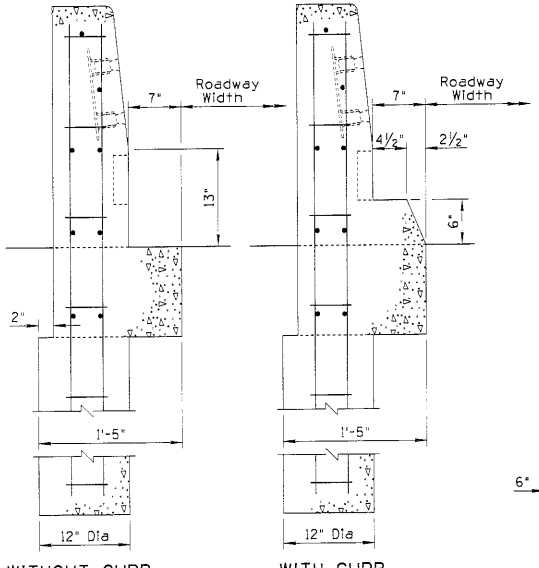

WITHOUT CURB WITH CURB

SECTION D-D

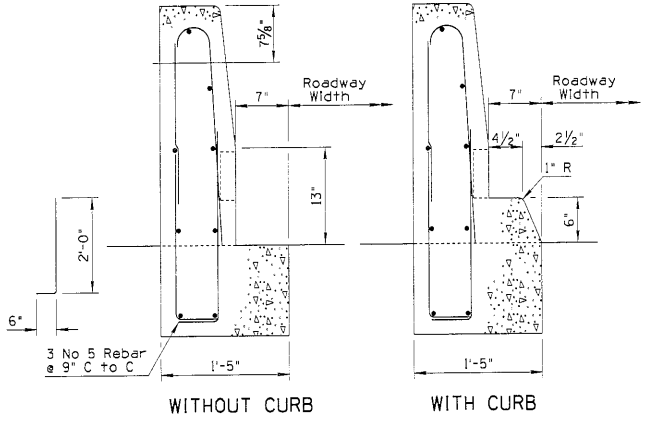

WITHOUT CURB WITH CURB

SECTION E-E

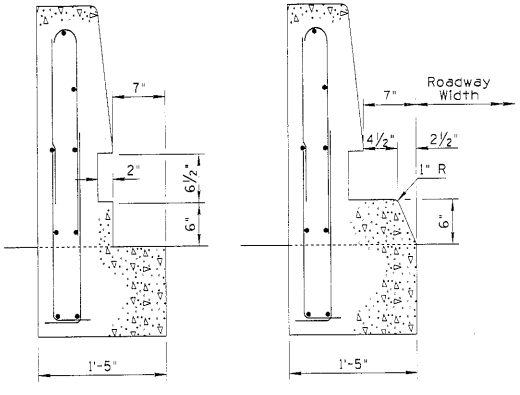

WITHOUT CURB WITH CURB

SECTION F-F

DESIGN APPROVED	STATE OF ARIZONA DEPARTMENT OF TRANSPORTATION DIVISION OF HIGHWAYS STANDARD DRAWINGS	3/94
APPROVED FOR DISTRIBUTION	CONCRETE HALF BARRIER TRANSITION	DRAWING NO. C-10.70 Sheet 3 of 4

NO	DESCRIPTION OF REVISIONS	MADE BY	DATE
1			
2			
3			
4			

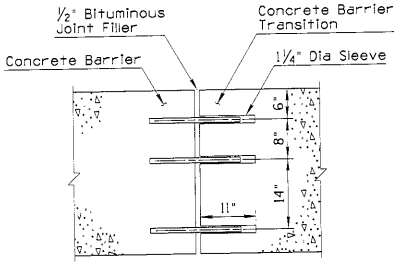

Joint Assembly

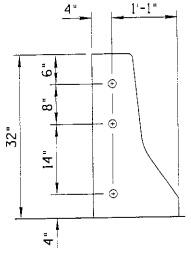

Dowel Locations

DOWEL INSTALLATION
AND CONSTRUCTION JOINT DETAIL

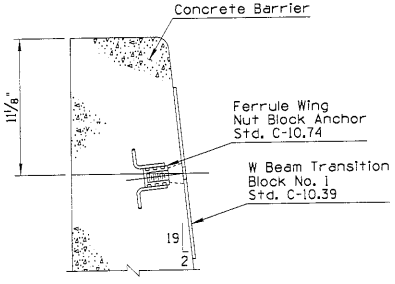

BLOCK AND ANCHORAGE
HALF BARRIER
(BLOCK 1 SHOWN)

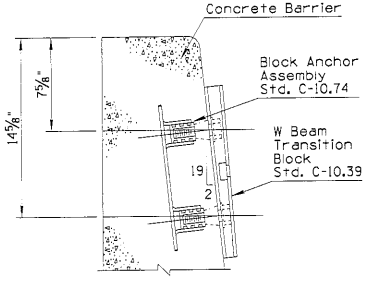

BLOCK AND ANCHORAGE
HALF BARRIER
(BLOCK 2 SHOWN)

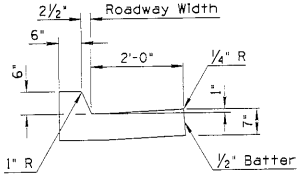

Barrier End

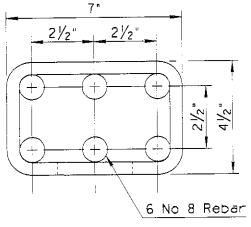

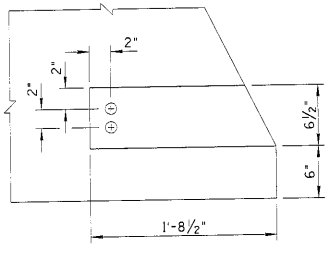

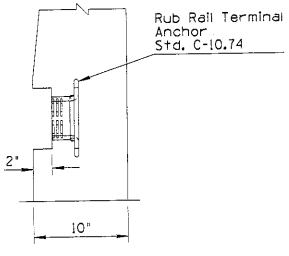

RUB RAIL SLOT DETAIL

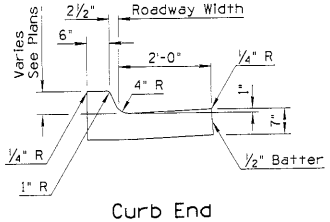

Curb End

CURB TRANSITION DETAIL

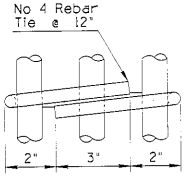

CAISSON REINFORCEMENT

DESIGN APPROVED	STATE OF ARIZONA DEPARTMENT OF TRANSPORTATION DIVISION OF HIGHWAYS STANDARD DRAWINGS	3/94
APPROVED FOR DISTRIBUTION	CONCRETE HALF BARRIER TRANSITION	DRAWING NO. C-10.70 Sheet 4 of 4

NO	DESCRIPTION OF REVISION	MADE BY	DATE
1			
2			
3			
4			

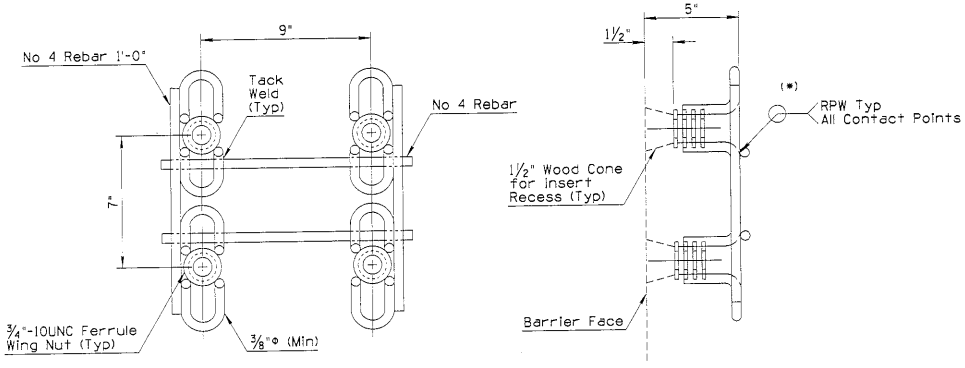

BLOCK ANCHOR ASSEMBLY

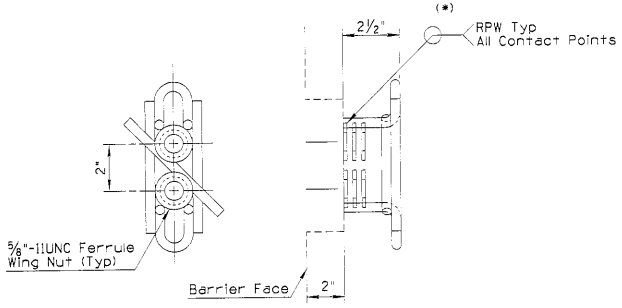

RUB RAIL TERMINAL ANCHOR

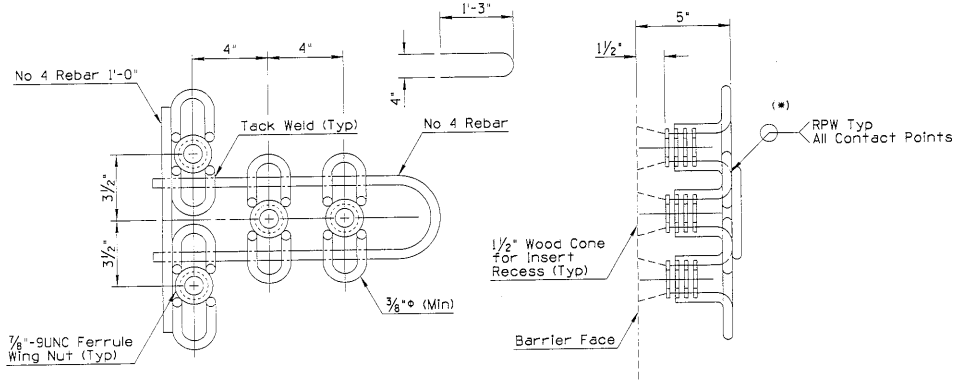

TERMINAL CONNECTOR ANCHOR ASSEMBLY

* Each Weld Shall Develop The Tensile Strength Of The Wire

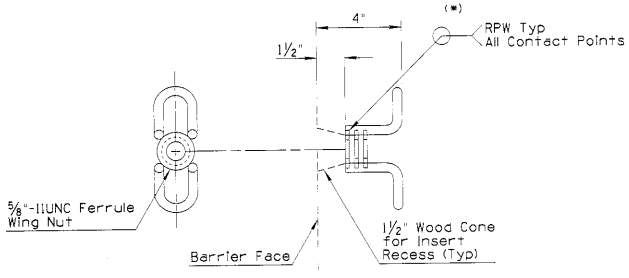

FERRULE WING NUT BLOCK ANCHOR

DESIGN APPROVED	STATE OF ARIZONA DEPARTMENT OF TRANSPORTATION DIVISION OF HIGHWAYS STANDARD DRAWINGS	3/94
APPROVED FOR DISTRIBUTION	HARDWARE FOR CONCRETE BARRIER TRANSITIONS	DRAWING NO. C-10.74

NO	DESCRIPTION OF REVISIONS	MADE BY	DATE
1			
2			
3			
4			

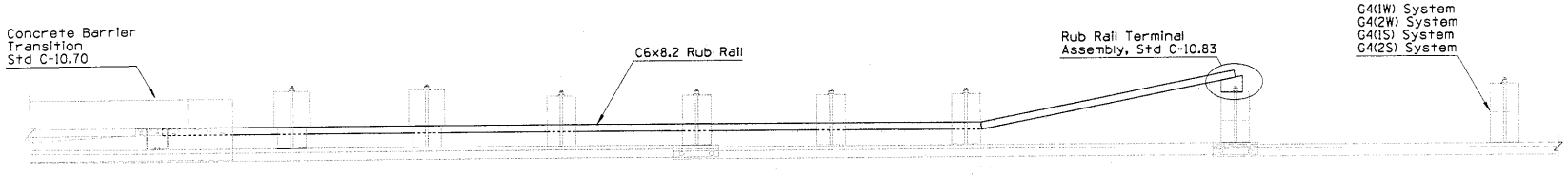

PLAN

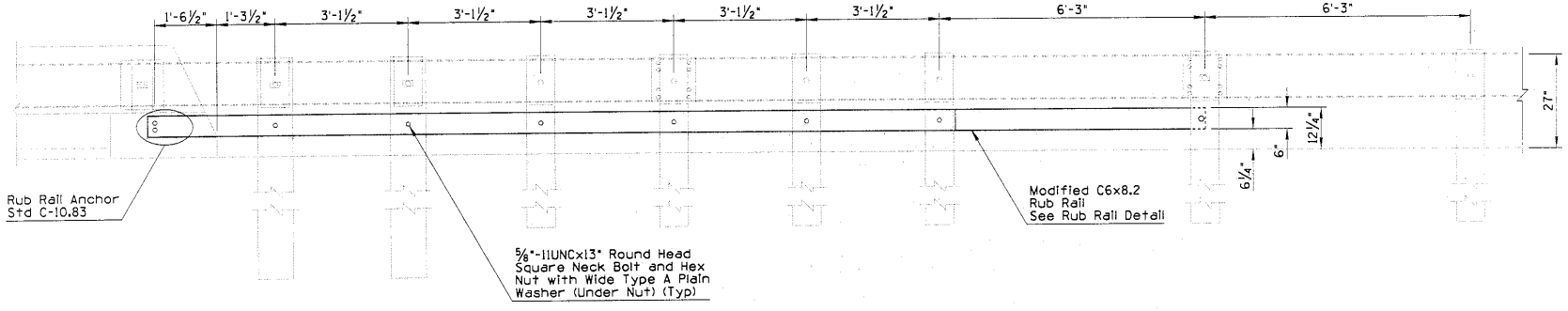

ELEVATION - TIMBER POST

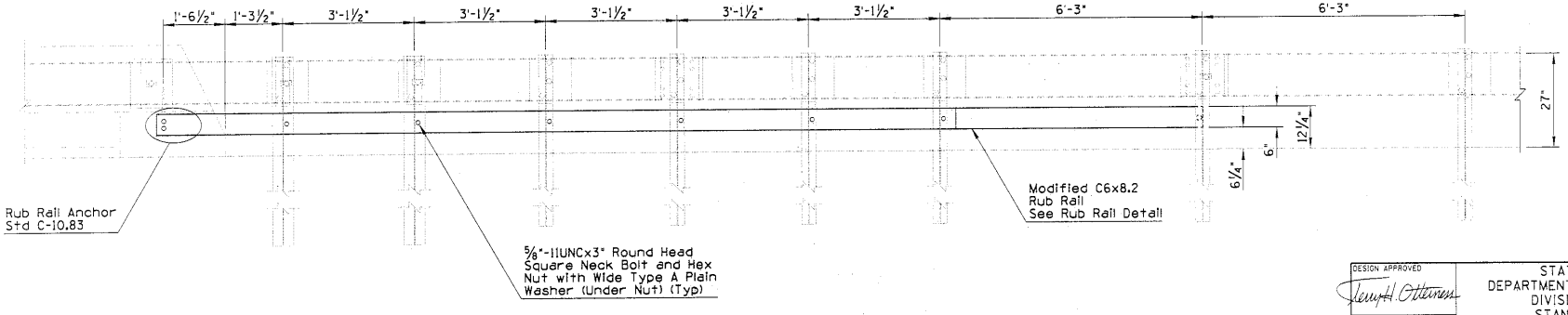

ELEVATION - STEEL POST

DESIGN APPROVED	STATE OF ARIZONA DEPARTMENT OF TRANSPORTATION DIVISION OF HIGHWAYS STANDARD DRAWINGS	3/94
APPROVED FOR DISTRIBUTION	RUB RAIL	DRAWING NO. C-10.80 Sheet 1 of 2

NO.	DESCRIPTION OF REVISIONS	MADE BY	DATE
1			
2			
3			
4			

GENERAL NOTES

1. All slots in rub rail are 11/16" x 2".
   All square holes are 11/16".

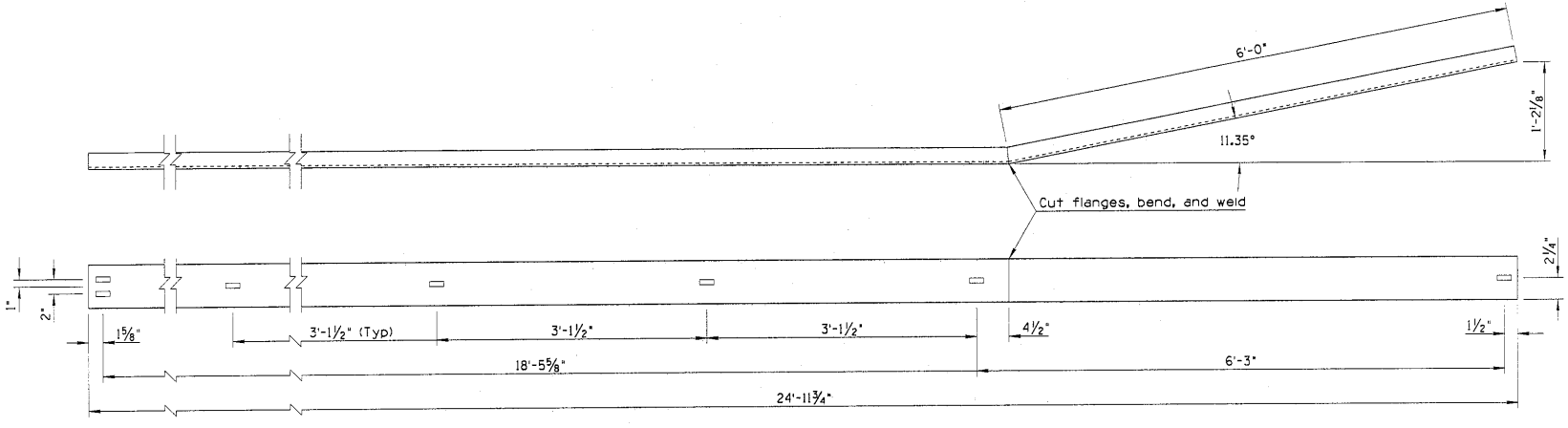

MODIFIED C6X8.2 RUB RAIL DETAIL

DESIGN APPROVED	STATE OF ARIZONA DEPARTMENT OF TRANSPORTATION DIVISION OF HIGHWAYS STANDARD DRAWINGS	3/94
APPROVED FOR DISTRIBUTION	RUB RAIL	DRAWING NO. C-10.80 Sheet 2 of 2

NO	DESCRIPTION OF REVISIONS	MADE BY	DATE
1			
2			
3			
4			

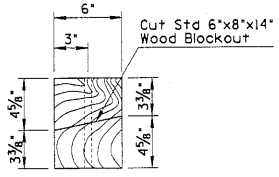

PLAN
RUB RAIL BACK BLOCKOUT DETAIL

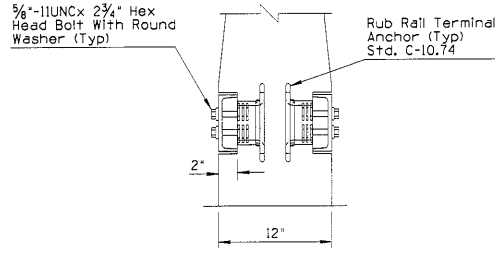

Median Barrier

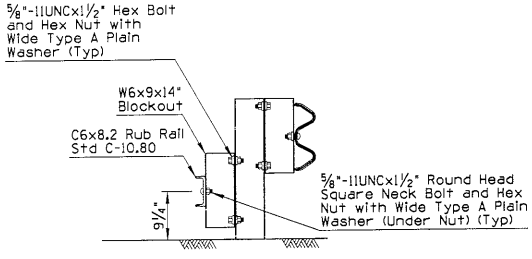

SECTION

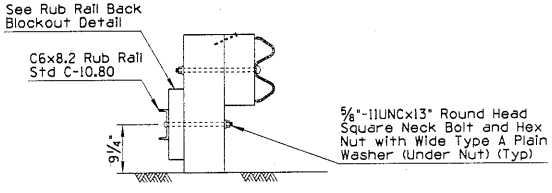

SECTION

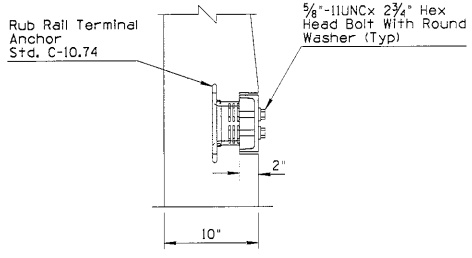

Half Barrier

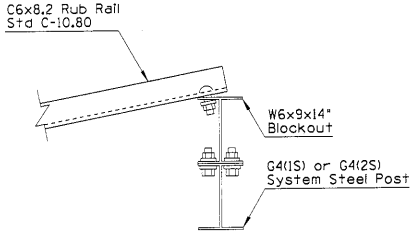

PLAN
STEEL POST

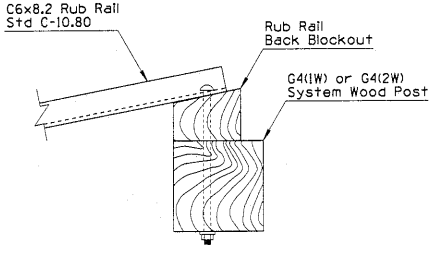

PLAN
TIMBER POST

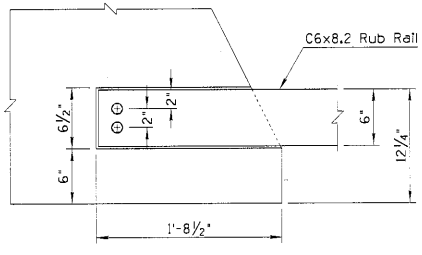

Elevation
RUB RAIL ANCHOR

RUB RAIL TERMINAL ASSEMBLY

DESIGN APPROVED	STATE OF ARIZONA DEPARTMENT OF TRANSPORTATION DIVISION OF HIGHWAYS STANDARD DRAWINGS	3/94
APPROVED FOR DISTRIBUTION	HARDWARE FOR RUB RAIL	DRAWING NO. C-10.83

NO	DESCRIPTION OF REVISIONS	MADE BY	DATE
1	MODIFIED STANDARD	PNB	3/94
2			
3			
4			

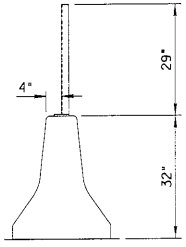

Glare Screen
Installation on
Standard Median Barrier

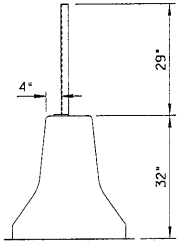

Glare Screen
Installation on
Median Barrier Transition

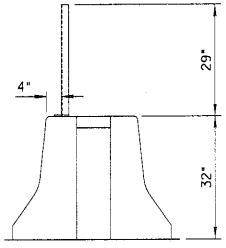

Glare Screen
Installation on
Half Barrier at Bridge Pier

GENERAL NOTES

1. Posts shall be 12'-6" C to C. Structural steel shall conform to ASTM-A-36, galvanized ASTM-A-123.
2. Hex head bolt shall conform to ASTM-A-307, galvanized ASTM-A-153 Class C.
3. Helical spring lock washer shall conform to ASTM-A-313, galvanized ASTM-A-153 Class C.
4. Tension wire: AWG No 9(0.148") galvanized to conform to ASTM-A-116 Class 2.
5. Hog ring: AWG No 12 (0.105") galvanized ASTM-A-116 Class 2. Fasten glare screen to top and bottom tension wire spaced approximately 2' apart.
6. Glare Screen: 18 Gauge steel. ASTM-A-526, galvanized ASTM-A-525/(G235), expanded to the following dimensions: 1.33" shortway of diamond and 4.0" longway of diamond (center to center of bridges) with a strand width of 0.250" angled at approximately 20° to the plane of the original sheet. Top edge to be shop curled and crimped on 12" centers. Glare screen shall be installed such that flat portion of screen blocks light from headlights. See Direction Detail.
7. Splices allowed in glare screen at posts only, with one full diamond overlap.
8. Glare screen shall be constructed without interruption to the greatest degree possible.

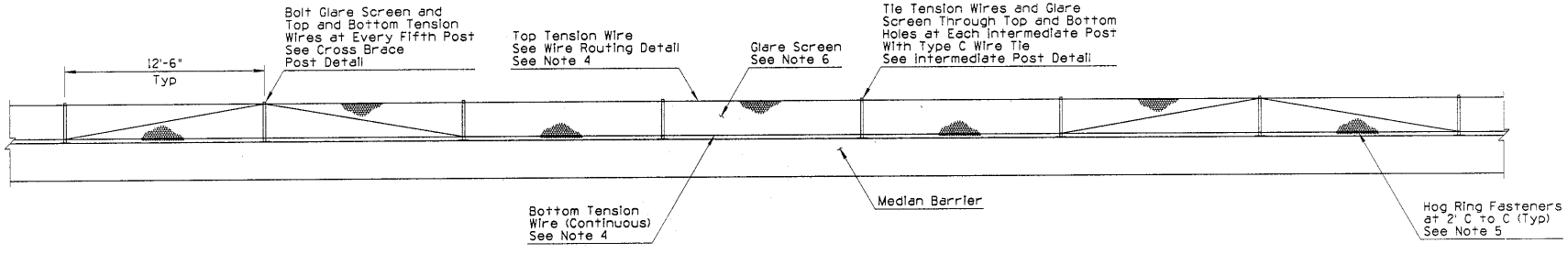

ELEVATION

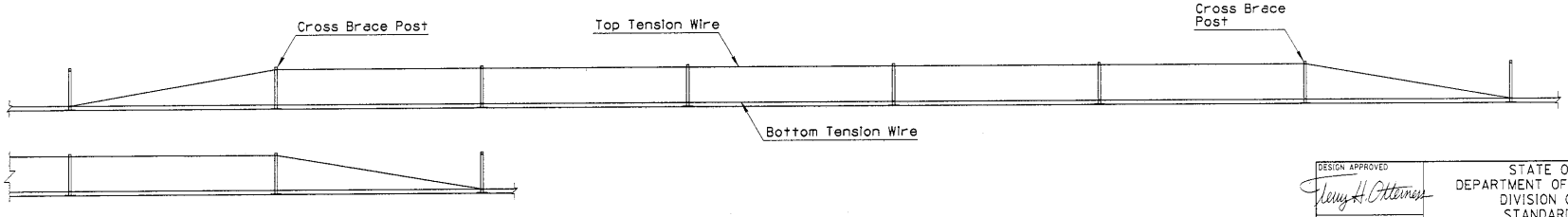

TENSION WIRE ROUTING DETAIL

DESIGN APPROVED APPROVED FOR DISTRIBUTION	STATE OF ARIZONA DEPARTMENT OF TRANSPORTATION DIVISION OF HIGHWAYS STANDARD DRAWINGS	REV. 3/94
	GLARE SCREEN CONCRETE MEDIAN BARRIER	DRAWING NO. C-10.97 Sheet 1 of 3

NO	DESCRIPTION OF REVISIONS	MADE BY	DATE
1	MODIFIED STANDARD & ADDED SHT 2	PNB	3/94
2			
3			
4			

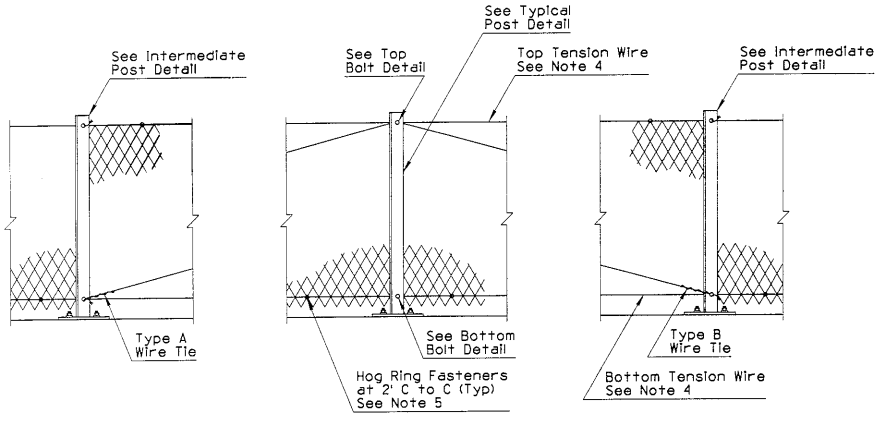

CROSS BRACE POST DETAIL

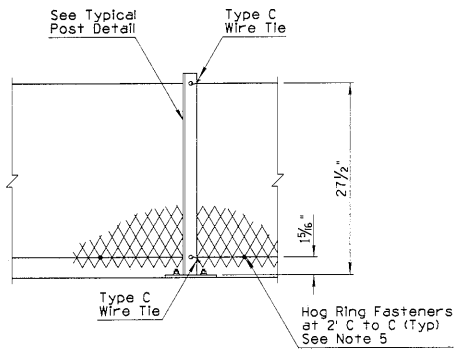

INTERMEDIATE POST DETAIL

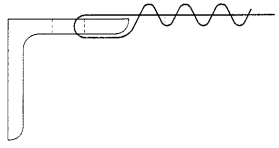

TYPE A WIRE TIE

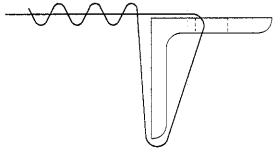

TYPE B WIRE TIE

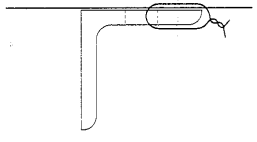

TYPE C WIRE TIE

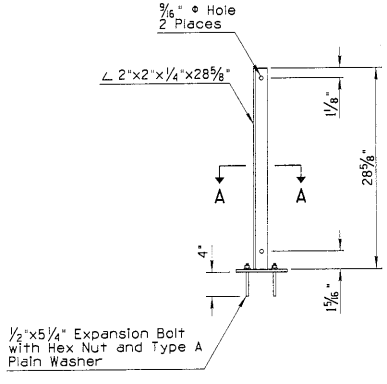

TYPICAL POST DETAIL

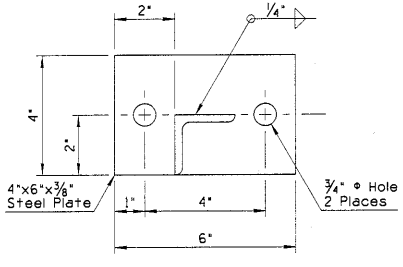

SECTION A-A

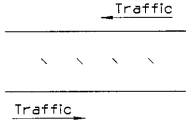

Top View Section

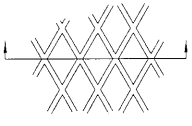

Elevation

DIRECTION DETAIL

DESIGN APPROVED APPROVED FOR DISTRIBUTION	STATE OF ARIZONA DEPARTMENT OF TRANSPORTATION DIVISION OF HIGHWAYS STANDARD DRAWINGS	REV. 3/94
	GLARE SCREEN CONCRETE MEDIAN BARRIER	DRAWING NO. C-10.97 Sheet 2 of 3

NO	DESCRIPTION OF REVISIONS	MADE BY	DATE
1	MODIFIED STANDARD & ADDED SHT 3	PNB	3/94
2	REVERSED BOLT	PNB	3/94
3	MOVED END GUY WIRE	PNB	3/94
4			

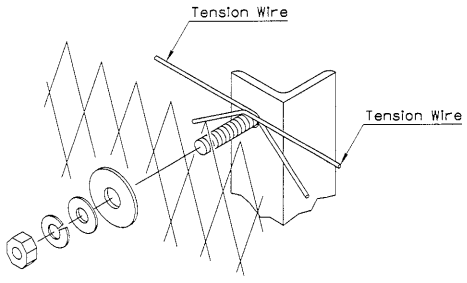

TOP BOLT DETAIL

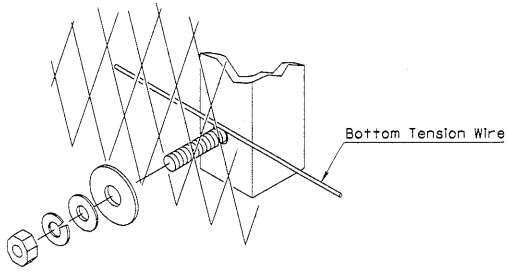

BOTTOM BOLT DETAIL

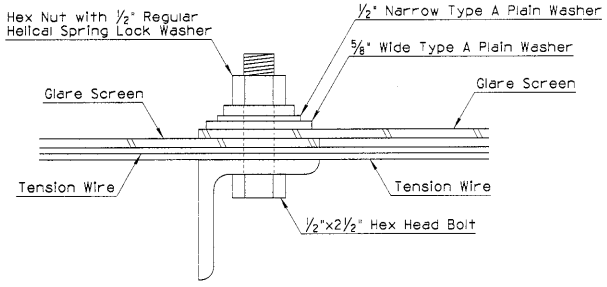

② TOP BOLT SECTION

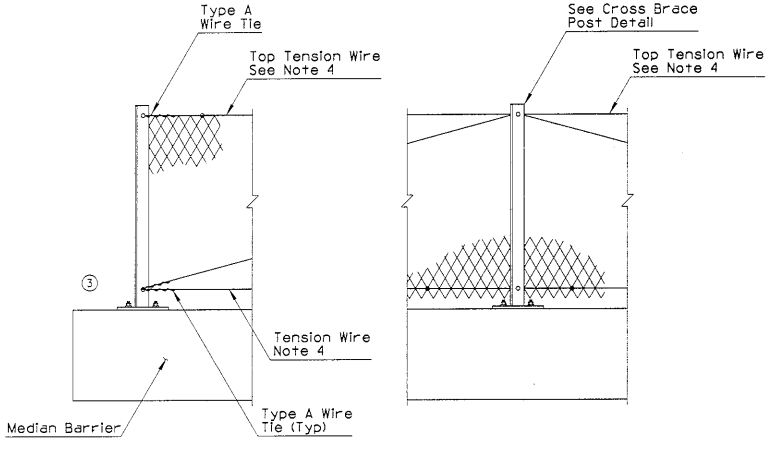

TERMINATION DETAIL

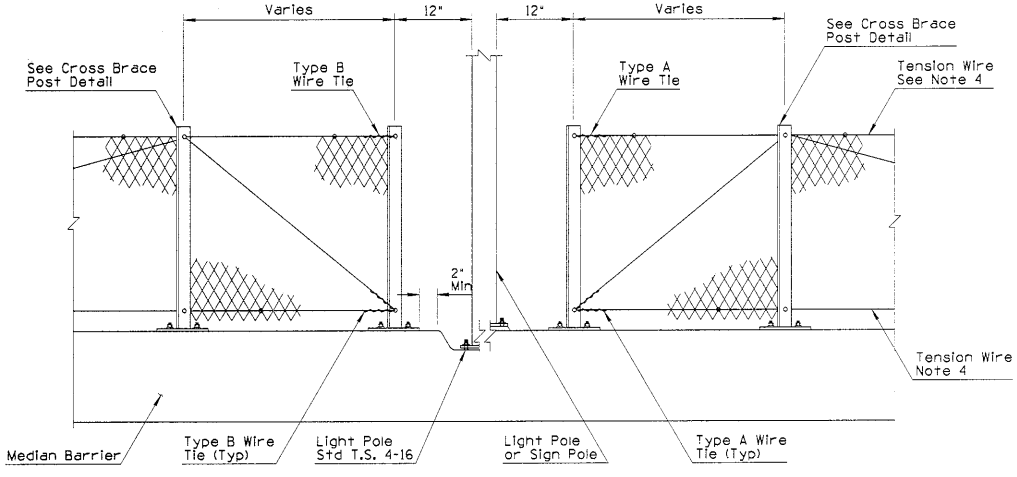

OBSTRUCTION DETAIL

DESIGN APPROVED

APPROVED FOR DISTRIBUTION

STATE OF ARIZONA
DEPARTMENT OF TRANSPORTATION
DIVISION OF HIGHWAYS
STANDARD DRAWINGS

REV. 3/94

① GLARE SCREEN
CONCRETE MEDIAN BARRIER

DRAWING NO. C-10.97
Sheet 3 of 3

NO	DESCRIPTION OF REVISIONS	MADE BY	DATE
1	MODIFIED DIMENSION	PNB	3/94
2			
3			
4			

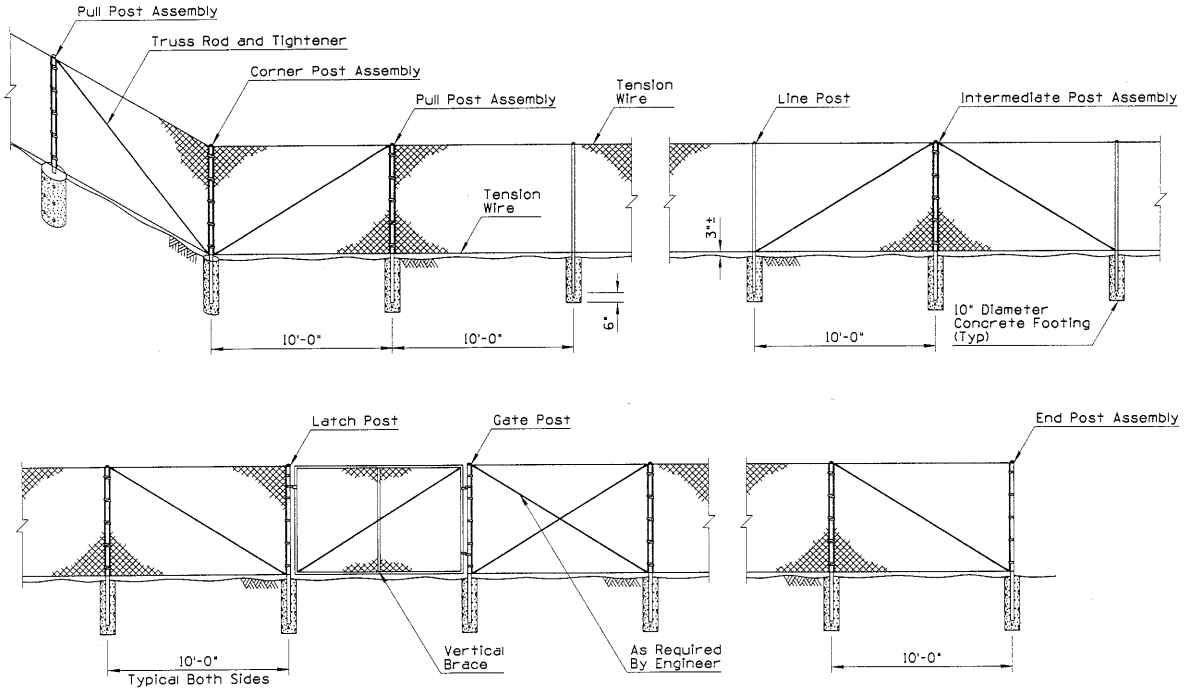

TYPICAL CHAIN LINK FENCE INSTALLATION - TYPE 1 SHOWN

GENERAL NOTES

1. Posts shall be round, H-section, or roll-formed and shall conform to the nominal dimensional requirements shown on the plans. Dimensional tolerances for all shapes shall be according to ASTM A-500. In addition, the material of which posts are fabricated shall have a nominal thickness, before galvanizing, of not less than 0.111" for line posts and 0.130" for terminal posts.
2. Chain link fabric shall be either zinc-coated or aluminum-coated steel wire fence fabric. Zinc-coated steel fabric shall conform to the requirements of ASTM A392, Class 1 coating. Aluminum-coated steel fabric shall conform to the requirements of ASTM A491, with a minimum weight of coating of 0.40 ounce per square foot of wire surface area. Fabric shall be 11 guage for all fence fabric 60 inches or less in height and shall be 9 guage for fabrics greater than 60 inches in height.
3. Tension wires shall be 7 guage (0.177 inch diameter) coil spring steel wire with a minimum tensile strength of 75,000 pounds per square inch and shall be zinc-coated or aluminum-coated.
4. Truss rods shall be 3/8 inch diameter adjustable rods. Truss tighteners shall have a strap thickness of not less than 1/4 inch.
5. Stretcher bars shall be 3/16 inch by 3/4 inch steel flat bars. Stretcher bar bands shall be 1/8 inch by one inch preformed steel bands.
6. (1) Bottom tension wire shall be 3 inches from top of crown on concrete footings.
7. Intermediate post assemblies shall be spaced at 500 foot intervals or midway between pull posts when the distance between such posts is less than 1,000 feet and more than 500 feet.
8. See sheet 3 of 3 for typical fence location.

TYPICAL POST DIMENSIONS

Fabric Height	Corner, End, Intermediate, Gate, Latch and Pull Posts				Line Posts			
		Round	Roll Formed			Round		Roll Formed
	Length	(OD)	⌊	☐	Length	(OD)	H-Section	☐
36"	6'-0"	2.375"	3.50"x3.50"	2.25"x1.70"	5'-6"	1.900"	1.875"x1.625"	1.875"x1.625"
48"	7'-0"	2.375"	3.50"x3.50"	2.25"x1.70"	6'-6"	1.900"	1.875"x1.625"	1.875"x1.625"
60"	8'-0"	2.375"	3.50"x3.50"	2.25"x1.70"	7'-6"	1.900"	1.875"x1.625"	1.875"x1.625"
72"	9'-0"	2.375"	3.50"x3.50"	2.25"x1.70"	8'-6"	1.900"	1.875"x1.625"	1.875"x1.625"
Over 72"	Height +3'-0"	2.875"	3.50"x3.50"	2.50"x2.50"	Height +2'-6"	2.375"	2.250"x2.000"	1.875"x1.625"

DESIGN APPROVED	STATE OF ARIZONA DEPARTMENT OF TRANSPORTATION DIVISION OF HIGHWAYS STANDARD DRAWINGS	REV. 3/94
APPROVED FOR DISTRIBUTION	FENCE, CHAIN LINK TYPE 1	DRAWING NO. C-12.20 Sheet 1 of 3

NO	DESCRIPTION OF REVISIONS	MADE BY	DATE
1	MODIFIED DIMENSION	PNB	3/94
2			
3			
4			

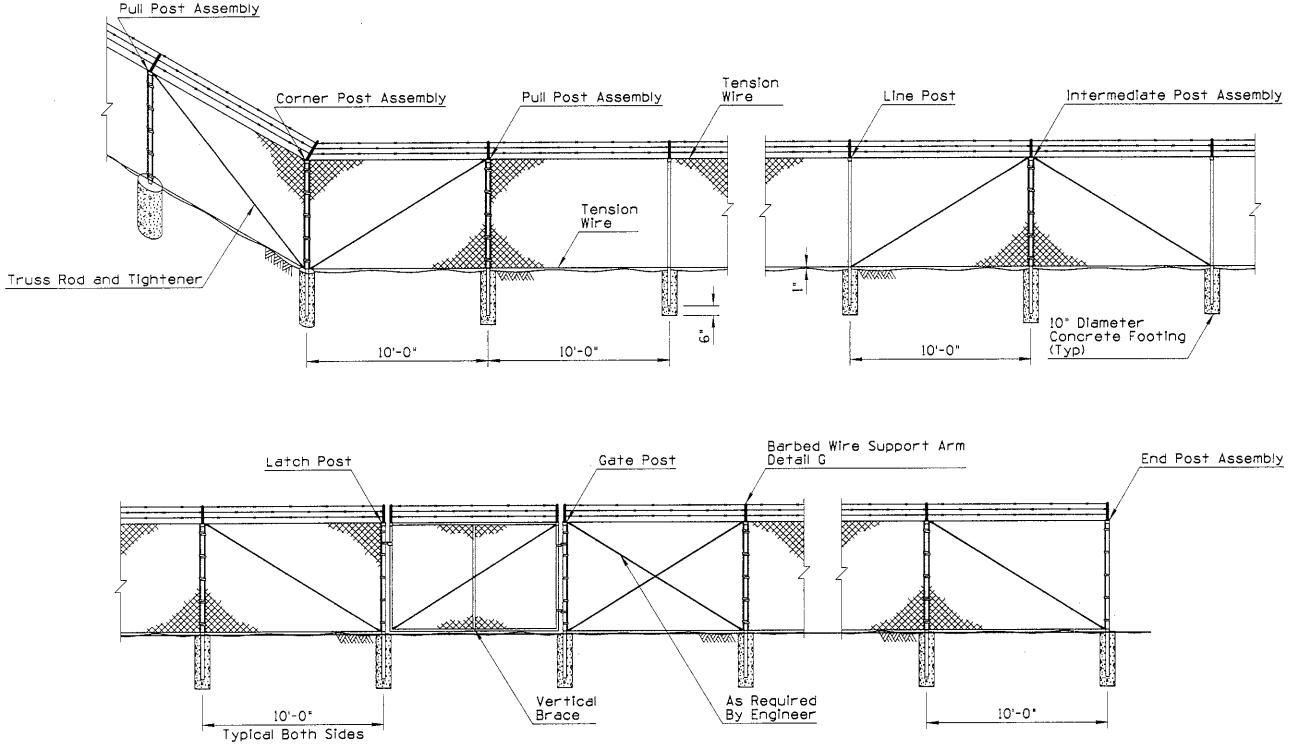

TYPICAL CHAIN LINK FENCE INSTALLATION - TYPE 2 SHOWN

GENERAL NOTES

1. Barbed wire for use with Type 2 chain link fence shall be 12 guage steel wire with 4 point 14 guage barbs spaced five inches apart and shall be either zinc-coated or aluminum-coated. Zinc-coated steel wire shall conform to the requirements of ASTM A121, Class 1 coating. Aluminum-coated steel wire shall conform to the requirements of ASTM 1585, Type 1, Class 1 coating.
2. Barbed wire support arm shall be of the type shown on the plans, shall be fabricated from commercial quality steel, and shall be zinc-coated in accordance with the requirements of AASHTO M111.
3. Bottom tension wire shall just clear top of crown on concrete footings.
4. For details and notes not shown - see chain link fence Type 1, sheet 1 of 3.
5. See sheet 3 of 3 for typical fence location.

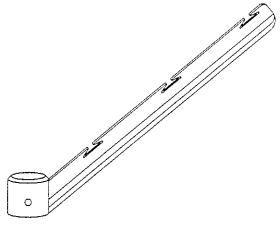

DETAIL G
BARBED WIRE SUPPORT ARM

TYPICAL POST DIMENSIONS								
Fabric Height	Corner, End, Intermediate, Gate, Latch and Pull Posts				Line Posts			
		Round	Roll Formed			Round		Roll Formed
	Length	(OD)	⌊	☐	Length	(OD)	H-Section	☐
72"	① 8'-6"	2.375"	3.50"x3.50"	2.50"x2.50"	8'-0"	1.900"	1.875"x1.625"	1.875"x1.625"

DESIGN APPROVED APPROVED FOR DISTRIBUTION	STATE OF ARIZONA DEPARTMENT OF TRANSPORTATION DIVISION OF HIGHWAYS STANDARD DRAWINGS	REV. 3/94
	FENCE, CHAIN LINK TYPE 2	DRAWING NO. C-12.20 Sheet 2 of 3

NO	DESCRIPTION OF REVISIONS	MADE BY	DATE
1	MODIFIED DRAWING	PNB	3/94
2			
3			
4			

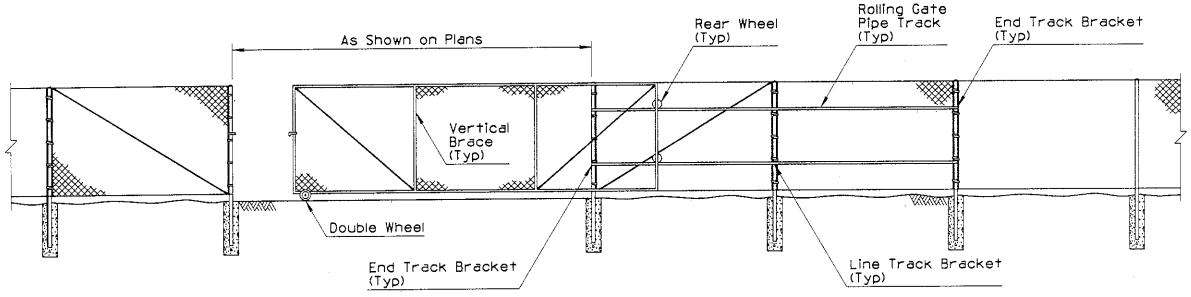

ROLLING GATE

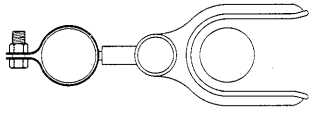

SECTION A-A
DOUBLE GATE LATCH ASSEMBLY

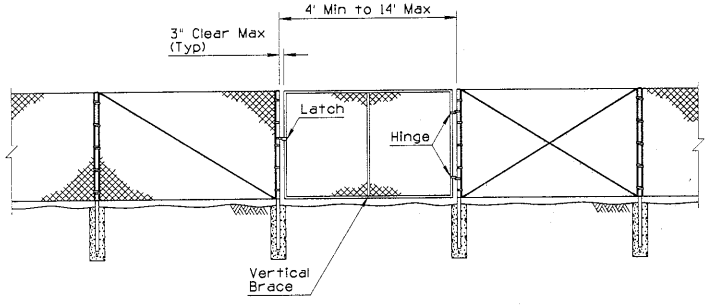

SINGLE GATE

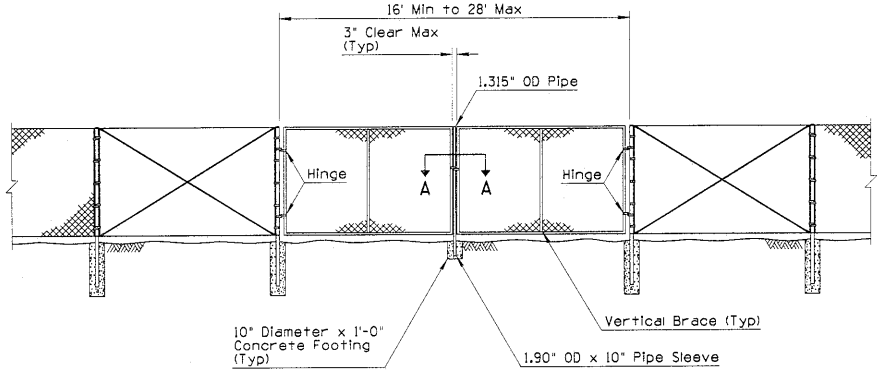

DOUBLE GATE

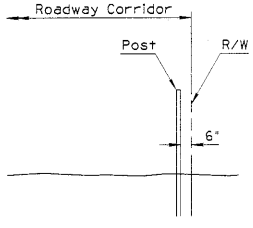

① TYPICAL FENCE LOCATION

TYPICAL GATE DIMENSIONS									
SINGLE AND DOUBLE SWING GATES						ROLLING GATES			
Gate Leaf Width	Vertical Braces	Gate Post Size	Gate Leaf Width	Vertical Braces	Gate Post Size	Gate Leaf Width	No of Equally Spaced Vertical Braces	Tension Rods Per Braced Panel	Gate Post Size
6' H or Less		OD	Over 6' H		OD				OD
3' to 8'	0	2.8750"	3' to 8'	0	2.8750"	6' to 13'	1	0	2.8750"
8' to 16'	1	4.0000"	8' to 16'	1	4.0000"	13' to 16'	1	1	2.8750"
16' to 18'	2	4.0000"				16' to 21'	2	1	2.8750"
						21' to 27'	2	1	2.8750"
						28' and Larger	3	1	2.8750"

GATES FOR CHAIN LINK FENCE - TYPE 1 SHOWN
(Type 2, With Barbed Wire Typical)

DESIGN APPROVED APPROVED FOR DISTRIBUTION	STATE OF ARIZONA DEPARTMENT OF TRANSPORTATION DIVISION OF HIGHWAYS STANDARD DRAWINGS	REV. 3/94
	FENCE, CHAIN LINK GATES	DRAWING NO. C-12.20 Sheet 3 of 3