STATE OF ARIZONA

DEPARTMENT OF TRANSPORTATION

CONSTRUCTION

OCTOBER 1989

DIVISION OF HIGHWAYS

STANDARD DRAWINGS

CONSTRUCTION STANDARDS - INDEX

DRAWING NO.	TITLE
C-01.10	SYMBOL LEGEND
C-01.11	SYMBOL LEGEND
C-01.12	SYMBOL LEGEND
C-01.13	SYMBOL LEGEND
C-01.30	GENERAL ABBREVIATIONS
C-01.31	GENERAL ABBREVIATIONS
C-01.32	GENERAL ABBREVIATIONS
C-02.10	SLOPES, INTERSTATE & CLASS A-A ROADWAYS
C-02.20	SLOPES, CLASS A & B ROADWAYS
C-02.30	SLOPES, CLASS C & D ROADWAYS
C-02.40	PAVEMENT CROWN, PARABOLIC
C-03.10	DITCHES AND DYKES
C-03.20	CHANNELS & DYKES TYP. PARALLEL INSTALLATIONS
C-04.10	SPILLWAY, EMBANKMENT
C-04.20	DOWNDRAIN, EMBANKMENT
C-04.30	SPILLWAY, EMBANKMENT, LENGTH TABLE
C-04.40	DOWNDRAIN, EMBANKMENT, LENGTH TABLE
C-04.50	DOWNDRAIN ENERGY DISSIPATOR
C-05.10	SINGLE CURB, CURB & GUTTER, EMBANKMENT CURB
C-05.11	RAMP CURB & GUTTER LAYOUT
C-05.12	CURB & GUTTER TRANSITIONS
C-05.20	CONCRETE DRIVEWAYS & SIDEWALKS
C-05.30	SIDEWALK RAMP
C-05.40	MEDIAN PAVING
C-05.50	CONCRETE BUS BAY
C-06.10	DRIVEWAY & TURNOUT LAYOUTS (2 SHEETS)
C- 6.20	GEOMETRICS, DETOUR
C-07.01	PCCP JOINT DETAILS
C-07.02	LOAD TRANSFER DOWEL DETAILS
C-07.03	MAINLINE PCCP JOINTS
C-07.04	ENTRANCE RAMP PCCP JOINTS
C-07.05	EXIT RAMP PCCP JOINTS
C-07.06	TRENCH BACKFILL AND PAVEMENT REPLACEMENT
C-08.10	RAMP GEOMETRICS
C-08.20	PAVED GORE AREA
C- 9.10	GROOVING FOR BITUMINOUS SHOULDERS
C- 9.20	GROOVING FOR CONCRETE SHOULDERS
C-10.01	TYPE A GUARD RAIL INSTALLATION, REFLECTOR TAB
C-10.02	TYPE B GUARD RAIL INSTALLATION, REFLECTOR TAB
C-10.03	MEASUREMENT LIMITS FOR W BEAM AND THRIE BEAM SYSTEM
C-10.04	G4(1W) AND G4(2W) BLOCKED OUT W BEAM (TIMBER POST)
C-10.05	G4(1S) AND G4(2S) BLOCKED OUT W BEAM (STEEL POST)
C-10.06	G4(1S MODIFIED) BLOCKED OUT W BEAM (STEEL POST) WITH SPECIAL CURB AND GUTTER
C-10.07	G9(A) AND G9(B) BLOCKED OUT THRIE BEAM (STEEL POST)
C-10.08	G9(C) BLOCKED OUT THRIE BEAM (STEEL POST)
C-10.09	HALF BARRIER, CAST IN PLACE, SLIP FORM

DRAWING NO.	TITLE
C-10.10	HALF BARRIER, CAST IN PLACE, FIXED FORM
C-10.11	HALF BARRIER, PRECAST
C-10.12	MEDIAN BARRIER, CAST IN PLACE, SLIP FORM
C-10.13	MEDIAN BARRIER, CAST IN PLACE, FIXED FORM
C-10.14	MEDIAN BARRIER, PRECAST
C-10.15	FLARED BREAKAWAY CABLE TERMINAL ASSEMBLY (TIMBER POST)
C-10.16	FLARED BREAKAWAY CABLE TERMINAL ASSEMBLY (STEEL POST)
C-10.17	BCT ASSEMBLY STEEL
C-10.18	BCT ASSEMBLY TIMBER
C-10.19	GUARDRAIL ASSEMBLY (2 SHEETS)
C-10.20	BARRIER DETAILS AT PIERS
C-10.21	GUARD RAIL ANCHOR ASSEMBLY STEEL TERMINAL POST
C-10.22	GUARD RAIL ANCHOR ASSEMBLY TIMBER TERMINAL POST
C-10.23	BURIED & BOLTED ANCHOR TIMBER POST
C-10.24	BURIED & BOLTED ANCHOR STEEL POST
C-10.25	TRANSITION W BEAM (TIMBER POST) TO CONCRETE HALF BARRIER (5 SHEETS)
C-10.30	TRANSITION W BEAM (STEEL POST) TO CONCRETE HALF BARRIER (5 SHEETS)
C-10.35	TRANSITION W BEAM (STEEL POST) TO CONCRETE HALF BARRIER, CURB INSTALLATION (5 SHEETS)
C-10.40	TRANSITION W BEAM TO CONCRETE MEDIAN BARRIER (4 SHEETS)
C-10.45	W BEAM BCT ATTENUATOR ASSEMBLY (5 SHEETS)
C-10.50	W BEAM BCT ATTENUATOR ASSEMBLY, CURB INSTALLATION (5 SHEETS)
C-10.55	MEDIAN W BEAM BCT ATTENUATOR ASSEMBLY (4 SHEETS)
C-10.96	GLARE SCREEN, TYPE "P", CONC. MEDIAN BARRIER
C-10.97	GLARE SCREEN, TYPE "O", CONC. MEDIAN BARRIER
C-10.98	BARRIER TRANSITION - TANGENT TYPES A AND B (2 SHEETS)
C-10.99	BARRIER TRANSITION - CURVE
C-11.10	ROADWAY CATTLE GUARD - FOOTING TYPE
C-11.11	ROADWAY CATTLE GUARD - GRILL & GRILL CLAMP DETAIL
C-11.12	ROADWAY CATTLE GUARD - FOOTING TYPE, MISC. DETAILS
C-11.20	CATTLE GUARD, DRAINAGE
C-11.30	CATTLE GUARD, RAILROAD
C-12.10	FENCE, WOVEN AND BARBED WIRE WITH GATES (5 SHEETS)
C-12.20	FENCE, CHAIN LINK TYPES 1 AND 2 WITH GATES (3 SHEETS)
C-12.30	CHAIN LINK CABLE BARRIER (3 SHEETS)
C-13.10	PIPE CULVERT INSTALLATION
C-13.15	TYPICAL PIPE INSTALLATION
C-13.20	PIPE, REINFORCED CONCRETE END SECTION
C-13.25	PIPE, CORRUGATED METAL, END SECTION
C-13.30	PIPE & PIPE ARCH, CORRUGATED METAL CONCRETE INVERT PAVING
C-13.35	STRUCTURAL EXCAVATION PAYMENT LIMITS
C-13.45	STRUCTURE BACKFILL PLACEMENT
C-13.50	STRUCTURE BACKFILL MEASUREMENT
C-13.55	PIPE, CATTLE-VEHICLE PASS, MITERED END TREATMENT
C-13.60	SLOTTED DRAIN DETAILS
C-13.65	SLOTTED DRAIN INSTALLATION DETAILS
C-13.70	STORM DRAIN CONNECTION DETAILS
C-13.75	STORM DRAIN OUTLET DETAILS
C-13.80	PIPE COLLAR DETAILS
C-14.10	HEADWALL, PIPE, STRAIGHT & "L" TYPES
C-14.20	HEADWALL, NORMAL TO PIPE 42" - 84" PIPE
C-14.21	HEADWALLS, 42" - 84" PIPE SKEWED
C-14.30	HEADWALL, DROP INLET

CONSTRUCTION STANDARDS - INDEX

DRAWING NO.	TITLE
C-15.10	CATCH BASIN, TYPE 1
C-15.20	CATCH BASIN, TYPE 3
C-15.30	CATCH BASIN, TYPE 4
C-15.40	CATCH BASIN, TYPE 5
C-15.50	CATCH BASIN, GRATES, LONGITUDINAL BARS
C-15.60	CATCH BASIN, GRATES, TRANSVERSE BARS
C-15.70	CATCH BASIN MISC. DETAILS
C-15.80	CATCH BASIN, MEDIAN FLUSH
C-15.90	CATCH BASIN, MEDIAN DYKE, PRECAST
C-15.91	SPECIAL CATCH BASIN DETAILS
C-15.92	SPECIAL CATCH BASIN WITH HALF BARRIER
C-16.10	IRRIGATION HEADWALLS 18" TO 60" DIAMETER PIPES
C-16.20	IRRIGATION STANDPIPES
C-16.30	IRRIGATION VALVE & GATE
C-16.40	IRRIGATION SLEEVES
C-17.10	BANK PROTECTION, RAIL TYPES 1, 2 & 3
C-17.20	BANK PROTECTION, RAIL TYPES 4, 5 & 6
C-18.10	MANHOLE DETAILS
C-18.20	MANHOLE FRAME AND COVER DETAILS
C-18.30	MISCELLANEOUS MANHOLE DETAILS
C-18.40	MANHOLE RISER DETAILS
C-19.10	FORD - CONCRETE WALLS
C-19.20	FORDS - TYPES 1 & 2
C-21.10	SURVEY MONUMENT, FRAME AND COVER, RIGHT OF WAY MARKER
C-21.20	STANDARD MARKER
C-22.10	UTILITY LINE, PROTECTIVE CONCRETE SLAB
C-22.15	SANITARY SEWER ENCASEMENT
C-22.20	PIPE SUPPORT ACROSS TRENCHES (3 SHEETS)
C-22.25	PRECAST SANITARY SEWER MANHOLES
C-22.30	STUB OUT AND PLUG
C-22.35	DROP SEWER CONNECTIONS
C-22.40	SEWER CLEANOUT
C-23.10	THRUST BLOCKS FOR WATER LINES
C-23.15	BLOCKING FOR WATER VALVES GATE AND BUTTERFLY
C-23.20	ANCHOR BLOCK FOR VERTICAL BENDS
C-23.25	VERTICAL REALIGNMENT OF WATER MAINS
C-23.30	VALVE BOX INSTALLATION (3 SHEETS)
C-23.35	TAPPING SLEEVE AND VALVE INSTALLATION
C-23.40	JOINT RESTRAINT WITH TIE RODS (2 SHEETS)
C-23.45	CONCRETE WATER METER BOX
C-23.50	STEEL COVER FOR WATER METER BOX
C-23.55	WATERLINE-CUT AND PLUG 12" DIA. MAIN AND SMALLER
C-23.60	HYDRANT INSTALLATION
C-23.65	FIRE HYDRANT LOCATIONS

	CONSTRUCTION DRAWING SYMBOLS	
	NEW FEATURES	EXISTING FEATURES
City Limits		
County Line		
Forest or Reservation Boundry		
Property Line		
Mid Section or Quarter Section Line		
Right of Way Line		
Section Line		
Sixteenth Line		
National, State Boundry		
Township or Range Line		
Temporary Construction Easement		
Mile Post Marker	MP	MP
Right of Way Marker		
Survey Monument		
Angle Point or PI		
Centerline, Station Marks		
Quarter Corner		
Section Corner		

	CONSTRUCTION DRAWING SYMBOLS	
	NEW FEATURES	EXISTING FEATURES
Survey Control Point		
Bench Mark		
Access Control		
Sidewalk, Curb & Gutter w/Depressed Curb (1"=50' or larger)	30' DC	
Curb & Gutter with Depressed Curb (1"=100')	+25	
Curb, Single with Depressed Area		
Pavement and Sidewalk Edge		
Turnout	R	R
Top of Cut	C C	
Toe of Fill	F	
Transition, Cut to Fill	C F	
Railroad Track (1"=50' or larger)		
Railroad Track (1"=100')		
Bank Protection		
Bridge		
Building	Floor Elevation 1984.68'	Floor Elevation 1984.68'

DESIGN APPROVED George R. Hale	STATE OF ARIZONA DEPARTMENT OF TRANSPORTATION DIVISION OF HIGHWAYS STANDARD DRAWINGS	REV. 10/89
APPROVED FOR DISTRIBUTION	SYMBOL LEGEND	DRAWING NO. C-01.10

	CONSTRUCTION DRAWING SYMBOLS	
	NEW FEATURES	EXISTING FEATURES
Catch Basin, Curb & Gutter		
Catch Basin, Median Dike		
Catch Basin, Off Roadway, Flush		
Catch Basin, Single Curb		
Cattle Guard		
Concrete Box Culvert		
Dike, Median		
Dike		
Downdrain, one way		
Downdrain, two way		
Manhole		
Manhole, Frame & Cover, Reset		
Retaining Wall		
Rock Riprap		
Spillway, one way		
Spillway, two way		

	CONSTRUCTION DRAWING SYMBOLS	
	NEW FEATURES	EXISTING FEATURES
Straight Headwall w/End Section, Pipe (1"=20')		
Straight Headwall w/End Section, Pipe (1"=100')		
"U" Headwall w/End Section, Pipe (1"=20')		
"U" Headwall w/End Section, Pipe (1"=100')		
Wing Headwall w/End Section, Pipe (1"=20')		
Wing Headwall w/End Section, Pipe (1"=100')		
"L" Headwall w/End Section, Pipe (1"=20')		
"L" Headwall w/End Section, Pipe (1"=100')		
Plan View, Bituminous Pavement		
Plan View, Concrete Pavement		
Plan View, Graded Surface		
Plan View, Obliterate Pavement		
Plan View, Wood		
Section, Asphaltic Concrete Friction Course		
Section, Bituminous Pavement		
Section, Concrete		

DESIGN APPROVED George R. Hale	STATE OF ARIZONA DEPARTMENT OF TRANSPORTATION DIVISION OF HIGHWAYS STANDARD DRAWINGS	REV. 10/89
APPROVED FOR DISTRIBUTION	SYMBOL LEGEND	DRAWING NO. C-01.11

	CONSTRUCTION DRAWING SYMBOLS	
	NEW FEATURES	EXISTING FEATURES
Section, Metal		
Section, Wood		
Section, Aggregate Base		
Section. Ground Line		
Ground Line Profile		
Barbed Wire Fence & Gate		
Chain Link Fence & Gate		
Guard Rail & Breakaway Cable Terminal		
Gas Line	G 3" G	G 3" G
Irrigation Ditch, Concrete	IR IR	IR IR
Irrigation Ditch, Earth	IR IR	IR IR
Irrigation Line (1"=20')	IR 24" IR	IR 24" IR
Irrigation Line (1"=100')	IR 24" IR	IR 24" IR
Overhead Power/Joint Use Line	OP OP	OP OP
Overhead Telephone Line	OT OT	OT OT
Sanitary Sewer (1"=20')	S 8" S	S 8" S
Sanitary Sewer (1"=100')	S 8" S	S 8" S

	CONSTRUCTION DRAWING SYMBOLS	
	NEW FEATURES	EXISTING FEATURES
Storm Drain (1"=20')		SD 24" SD
Storm Drain (1"=100')		SD 36" SD
Street Light and With Mast Arm		
Telephone/Power Pedestal	T P	T P
Utility Pole with Down Guy and Anchor		
Underground Power/Joint Use Line	P P	P P
Underground Telephone Line	T T	T T
Water/Gas Meter Box	WM GM	WM GM
Water/Gas Valve	WV GV	WV GV
Water Line	W 8" W	W 8" W
Drainage Channel		
Drainage Ditch	Drainage Ditch	Drainage Ditch
Major Wash		NAME
Minor Wash		
℄ Grade, Profile		

DESIGN APPROVED *George R. Hale*	STATE OF ARIZONA DEPARTMENT OF TRANSPORTATION DIVISION OF HIGHWAYS STANDARD DRAWINGS	REV. 10/89
APPROVED FOR DISTRIBUTION	SYMBOL LEGEND	DRAWING NO. C-01.12

	CONSTRUCTION DRAWING SYMBOLS	
	NEW FEATURES	EXISTING FEATURES
Hedge		
Palm Tree		
Shrubbery		
Unclassified Tree		
Sign, Single Post		
Sign, Multiple Post		
Dimensions		
Visible Outlines, Sections, etc...		
Index Contour Line	8650	8650
Intermediate Contour Line	8650	8650
Depressed Index Contour Line		
Depressed Intermediate Contour Line		
Block Wall (1"=20')		
Median Barrier		
Fire Hydrant	FH	FH
Standpipe		SP
Transmission Tower		
Windmill		

	CONSTRUCTION DRAWING SYMBOLS	
	NEW FEATURES	EXISTING FEATURES
Mail Box		
Flag Pole		

DESIGN APPROVED APPROVED FOR DISTRIBUTION	STATE OF ARIZONA DEPARTMENT OF TRANSPORTATION DIVISION OF HIGHWAYS STANDARD DRAWINGS	REV. 10/89
	SYMBOL LEGEND	DRAWING NO. C-01.13

WORDS	TITLE	TEXT
Abutment	ABT.	abt
Acceleration	ACC.	acc
Acres	AC.	ac
Aggregate	AGG.	agg
Aggregate Base	AB	AB
Ahead	AHD.	ahd
Aluminum	AL.	Al
American Association of State Highway and Transportation Officials	AASHTO	AASHTO
American Concrete Institute	ACI	ACI
American Institute of Steel Construction	AISC	AISC
American National Standards Institute	ANSI	ANSI
American Road and Transportation Builders Association	ARTBA	ARTBA
American Society for Testing Materials	ASTM	ASTM
Amount	AMT.	amt
And Husband	ET VIR.	et vir
And Others	ET AL.	et al
And Wife	ET UX.	et ux
Approximate	APX.	apx
Asphalt	ASPH.	asph
Asphaltic Concrete	AC	AC
Asphaltic Concrete Friction Course	ACFC	ACFC
Asphaltic Concrete Surface Course	ACSC	ACSC
Avenue	AVE.	ave
Average Daily Traffic	ADT	ADT
Back	BK.	bk
Backfill	BKFL.	bkfl
Balance	BAL.	bal
Balance Point	BP	BP
Bank Protection	BANK PRT.	bank prt
Barbed Wire	BW	BW
Bearing	BRG.	brg
Begin	BGN.	bgn
Begin Full Super	BFS	BFS
Bench Mark	BM	BM
Bevel or Beveled	BEV.	bev
Bituminous	BIT.	bit.
Bituminous Mixture	BIT. MIX	bit. mix
Bituminous Surface Treatment	BST	BST
Bituminous Treated Base	BTB	BTB
Black Steel Pipe	BSP	BSP
Borrow	BOR.	bor
Boulevard	BLVD.	blvd
Boundary	BDY.	bdy

WORDS	TITLE	TEXT
Brass Cap	BC	BC
Breakaway Cable Terminal	BCT	BCT
Bridge	BR.	br
Building	BLDG.	bldg
Calculated	CALC.	calc
Cast-In-Place	C-I-P	C-I-P
Cast Iron	CI	CI
Cast Iron Pipe	CIP	CIP
Catch Basin	CB	CB
Cattle Guard	CG	CG
Cattle Pass	CP	CP
Cement	CEM.	cem
Cement Treated Base	CTB	CTB
Center	CTR.	ctr
Center Line	℄	℄
Center To Center	C.TO C.	c to c
Channel	CHAN.	chan
Class	CL.	cl
Compact or Compaction	COMP.	comp
Complete In Place	C. IN P.	C. IN P.
Concrete	CONC.	conc
Concrete Box Culvert	CBC	CBC
Connection	CONN.	conn
Construct or Construction	CST.	cst
Continuous	CONT.	cont
Corner	COR.	cor
Correction	CORR.	corr
Corrugated Aluminum Pipe	CAP	CAP
Corrugated Aluminum Pipe Arch	CAPA	CAPA
Corrugated Steel Pipe	CSP	CSP
Corrugated Steel Pipe Arch	CSPA	CSPA
County	CO.	co
Crossing	X-ING	x-ing
Cross Section	X-SCT.	x-sct
Crown	CR.	cr
Cubic	CU.	cu
Cubic Feet Per Second	CFS	cfs
Cubic Yard or Cubic Yards	CY	cy

WORDS	TITLE	TEXT
Culvert	CLV.	clv
Curb And Gutter	C & G	C & G
Curve To Spiral	C.S.	C.S.
Deceleration	DCL.	dcl
Deflection	DEF.	def
Deflection Of Total Curve	I	I
Degree Of Curve	D	D
Delineator	DEL.	del
Delta	Δ	Δ
Depressed Curb	DC	DC
Detail	DTL.	dtl
Diameter	DIA.	dia
Dike	DK.	dk
Distance	DST.	dst
Ditch	DT.	dt
Division	DIV.	div
Double	DBL.	dbl
Drain or Drainage	DRN.	drn
Drainage Area	DA	DA
Drawing	DWG.	dwg
Drive	DR.	dr
Each	EA.	ea
Easement	ESM.	esm
East	E	E
Eastbound	EB	EB
Elevation	ELEV.	elev
Elongated	ELG.	elg
Embankment	EMB.	emb
End Full Super	EFS	EFS
Engineer	ENGR.	engr

DESIGN APPROVED	STATE OF ARIZONA DEPARTMENT OF TRANSPORTATION DIVISION OF HIGHWAYS STANDARD DRAWINGS	REV. 1/83
APPROVED FOR DISTRIBUTION	GENERAL ABBREVIATIONS	DRAWING NO. C-01.30

WORDS	TITLE	TEXT
Abutment	ABT.	abt
Acceleration	ACC.	acc
Acres	AC.	ac
Aggregate	AGG.	agg
Aggregate Base	AB	AB
Ahead	AHD.	ahd
Aluminum	AL.	Al
American Association of State Highway and Transportation Officials	AASHTO	AASHTO
American Concrete Institute	ACI	ACI
American Institute of Steel Construction	AISC	AISC
American National Standards Institute	ANSI	ANSI
American Road and Transportation Builders Association	ARTBA	ARTBA
American Society for Testing Materials	ASTM	ASTM
Amount	AMT.	amt
And Husband	ET VIR.	et vir
And Others	ET AL.	et al
And Wife	ET UX.	et ux
Approximate	APX.	apx
Asphalt	ASPH.	asph
Asphaltic Concrete	AC	AC
Asphaltic Concrete Friction Course	ACFC	ACFC
Asphaltic Concrete Surface Course	ACSC	ACSC
Avenue	AVE.	ave
Average Daily Traffic	ADT	ADT
Back	BK.	bk
Backfill	BKFL.	bkfl
Balance	BAL.	bal
Balance Point	BP	BP
Bank Protection	BANK PRT.	bank prt
Barbed Wire	BW	BW
Bearing	BRG.	brg
Begin	BGN.	bgn
Begin Full Super	BFS	BFS
Bench Mark	BM	BM
Bevel or Beveled	BEV.	bev
Bituminous	BIT.	bit.
Bituminous Mixture	BIT. MIX	bit. mix
Bituminous Surface Treatment	BST	BST
Bituminous Treated Base	BTB	BTB
Black Steel Pipe	BSP	BSP
Borrow	BOR.	bor
Boulevard	BLVD.	blvd
Boundary	BDY.	bdy

WORDS	TITLE	TEXT
Brass Cap	BC	BC
Breakaway Cable Terminal	BCT	BCT
Bridge	BR.	br
Building	BLDG.	bldg
Calculated	CALC.	calc
Cast-In-Place	C-I-P	C-I-P
Cast Iron	CI	CI
Cast Iron Pipe	CIP	CIP
Catch Basin	CB	CB
Cattle Guard	CG	CG
Cattle Pass	CP	CP
Cement	CEM.	cem
Cement Treated Base	CTB	CTB
Center	CTR.	ctr
Center Line	℄	℄
Center To Center	C.TO C.	c to c
Channel	CHAN.	chan
Class	CL.	cl
Compact or Compaction	COMP.	comp
Complete In Place	C. IN P.	C. IN P.
Concrete	CONC.	conc
Concrete Box Culvert	CBC	CBC
Connection	CONN.	conn
Construct or Construction	CST.	cst
Continuous	CONT.	cont
Corner	COR.	cor
Correction	CORR.	corr
Corrugated Aluminum Pipe	CAP	CAP
Corrugated Aluminum Pipe Arch	CAPA	CAPA
Corrugated Steel Pipe	CSP	CSP
Corrugated Steel Pipe Arch	CSPA	CSPA
County	CO.	co
Crossing	X-ING	x-ing
Cross Section	X-SCT.	x-sct
Crown	CR.	cr
Cubic	CU.	cu
Cubic Feet Per Second	CFS	cfs
Cubic Yard or Cubic Yards	CY	cy

WORDS	TITLE	TEXT
Culvert	CLV.	clv
Curb And Gutter	C & G	C & G
Curve To Spiral	C.S.	C.S.
Deceleration	DCL.	dcl
Deflection	DEF.	def
Deflection Of Total Curve	I	I
Degree Of Curve	D	D
Delineator	DEL.	del
Delta	Δ	Δ
Depressed Curb	DC	DC
Detail	DTL.	dtl
Diameter	DIA.	dia
Dike	DK.	dk
Distance	DST.	dst
Ditch	DT.	dt
Division	DIV.	div
Double	DBL.	dbl
Drain or Drainage	DRN.	drn
Drainage Area	DA	DA
Drawing	DWG.	dwg
Drive	DR.	dr
Each	EA.	ea
Easement	ESM.	esm
East	E	E
Eastbound	EB	EB
Elevation	ELEV.	elev
Elongated	ELG.	elg
Embankment	EMB.	emb
End Full Super	EFS	EFS
Engineer	ENGR.	engr

DESIGN APPROVED	STATE OF ARIZONA DEPARTMENT OF TRANSPORTATION DIVISION OF HIGHWAYS STANDARD DRAWINGS	REV. 1/83
APPROVED FOR DISTRIBUTION	GENERAL ABBREVIATIONS	DRAWING NO. C-01.30

WORDS	TITLE	TEXT
Point On Semi-Tangent	P.O.S.T.	P.O.S.T.
Point On Spiral	P.O.S.	P.O.S.
Point On Tangent	P.O.T.	P.O.T.
Poly (Vinyl Chloride)	PVC	PVC
Portland Cement Concrete	PCC	PCC
Portland Cement Concrete Pavement	PCCP	PCCP
Pounds	LBS.	lbs
Pounds Per Square Inch	PSI	psi
Preliminary	PRLM.	prlm
Prestress, Prestressed or Prestressing	PS.	ps
Project	PRJ.	prj
Property Line	P/L	P/L
Protection	PRT.	prt
Provision or Provide	PRV.	prv
Quadrant	QUAD.	quad.
Quantity or Quantities	QUAN.	quan
Quantity Of Drainage Runoff	Q	Q
Radius	R	R
Railroad	RR	RR
Range	R.	R.
Reconstruct	RECST.	recst
Record	REC.	rec
Reference	REF.	ref
Reinforced or Reinforcing	REINF.	reinf
Reinforced Concrete	RC	RC
Reinforced Concrete Pipe	RCP	RCP
Reinforced Concrete Pipe Arch	RCPA	RCPA
Reinforced Concrete Pipe Rubber-Gasketed	RCPRG	RCPRG
Reinforcing bar	REBAR	rebar
Relocate, Relocation or Relocated	RELOC.	reloc
Required	REQD.	reqd
Reservation	RESV.	resv
Residence	RES.	res
Retain or Retaining	RET.	ret
Revised or Revision	REV.	rev.

WORDS	TITLE	TEXT
Right	RT.	rt
Right Of Way	R/W	R/W
Road	RD.	rd
Roadway	RDWY.	rdwy
Section	SCT.	sct
Select Material	SM	SM
Sheet	SH.	sh
Shrinkage	SHR.	shr
Sidewalk	SWLK.	swlk
Sight Distance-Intersection	SD_I	SD_I
Sight Distance-Passing	SD_P	SD_P
Sight Distance-Stopping	SD_S	SD_S
Single	SGL.	sgl
Skew	SK.	sk
South	S	S
Southbound	SB	SB
Special	SPCL.	spcl
Specification	SPEC.	spec
Spiral Rate Of Change	a	a
Spiral To Curve	S.C.	S.C.
Spiral To Tangent	S.T.	S.T.
Square	SQ.	sq
Square Yard	SY	sy
Standard	STD.	std
State Route	SR	SR
Station	STA.	sta
Street	ST.	st
Structure or Structural	STR.	str
Subdivision	SUBDIV.	subdiv
Subgrade	SG	SG
Subgrade Seal	SS	SS
Survey	SUR.	sur
Swell	SW.	sw
Symmetrical	SYM.	sym

WORDS	TITLE	TEXT
Tangent	TAN.	tan.
Tangent Length	T	T
Tangent To Spiral	T.S.	T.S.
Telegraph	TLG.	tlg
Telephone	TEL.	tel
Temporary	TEMP.	temp
Temporary Construction Easement	TCE	TCE
Topography	TOPO.	topo
Township	T.	T.
Traffic Interchange	TI	TI
Transition	TRNS.	trns
Turnout	T.O.	T.O.
Typical	TYP.	typ
Underground	UGND.	ugnd
Underpass	U.P.	U.P.
Variable	VAR.	var
Vertical	VERT.	vert.
Vertical Curve	VC	VC
Vertical Elliptical Reinforced Concrete Pipe	VERCP	VERCP
Vitrified Clay Pipe	VCP	VCP
Volume	VOL.	vol
Welded Wire Fabric	WWF	WWF
West	W	W
Westbound	WB	WB
Western Wood Products Association	WWPA	WWPA
Wide or Width	W.	W.
Yard	YD.	yd

DESIGN APPROVED	STATE OF ARIZONA DEPARTMENT OF TRANSPORTATION DIVISION OF HIGHWAYS STANDARD DRAWINGS	REV. 1/83
APPROVED FOR DISTRIBUTION	GENERAL ABBREVIATIONS	DRAWING NO. C-01.32

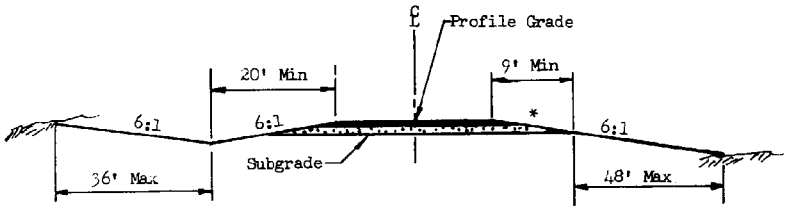

MINIMUM SLOPES

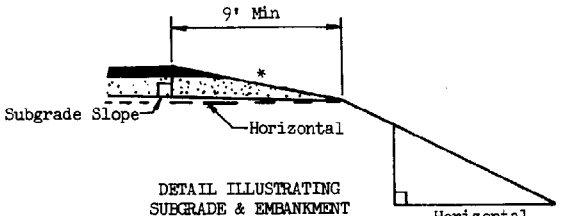

DETAIL ILLUSTRATING SUBGRADE & EMBANKMENT SLOPE CONTROL

GENERAL NOTES

1. Roadway width, cut ditch, superelevation, and type and thickness of roadway surfacing will be shown on project plans.
2. For cuts up to 6' use 5' semi-tangents for slope rounding. For each additional foot of cut add 1' to semi-tangent to 11' maximum.
3. Wetted perimeter should not extend above subgrade in unpaved ditch.
4. Pavement structure slopes are relative to subgrade slope. Slopes beyond the pavement structure, such as embankment and cut slopes, are relative to horizontal.
5. The desirable maximum embankment slope rate should be 4:1 within interchange and grade separation areas.
6. When median slopes intersect, see project plans.

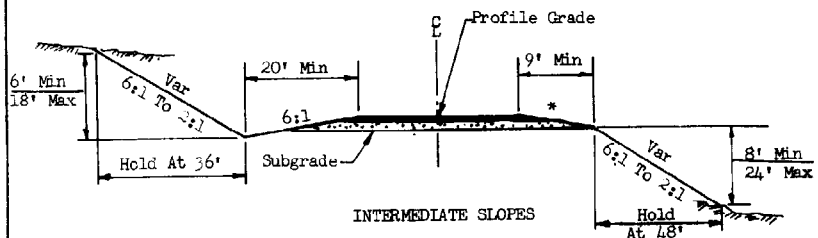

INTERMEDIATE SLOPES

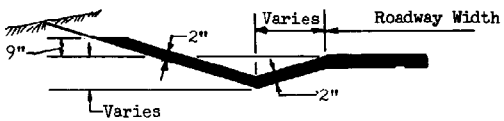

PAVED GUTTER IN CUTS

*Variable to 6:1 maximum

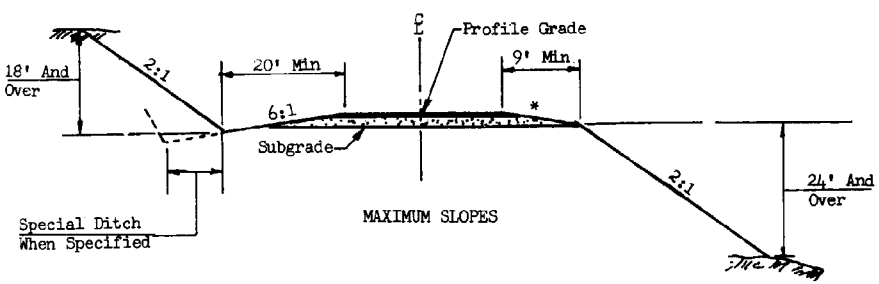

MAXIMUM SLOPES

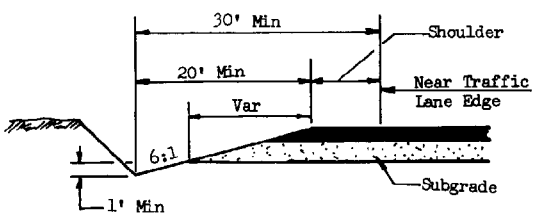

MINIMUM DITCH CONDITIONS

TYPICAL SECTIONS

DESIGN APPROVED	STATE OF ARIZONA DEPARTMENT OF TRANSPORTATION DIVISION OF HIGHWAYS STANDARD DRAWINGS	REV. 1/83
APPROVED FOR DISTRIBUTION	SLOPES, INTERSTATE & CLASS A-A ROADWAYS	DRAWING NO. C-02.10

GENERAL NOTES

1. Roadway width, cut ditch, superelevation, and type and thickness of roadway surfacing will be shown on project plans.
2. For cuts up to 6' use 5' semi-tangents for slope rounding. For each additional foot of cut add 1' to semi-tangent to 11' maximum.
3. Wetted perimeter should not extend above subgrade in unpaved ditch.
4. Pavement structure slopes are relative to subgrade slope. Slopes beyond the pavement structure, such as embankment and cut slopes, are relative to horizontal.

*Variable to 6:1 maximum

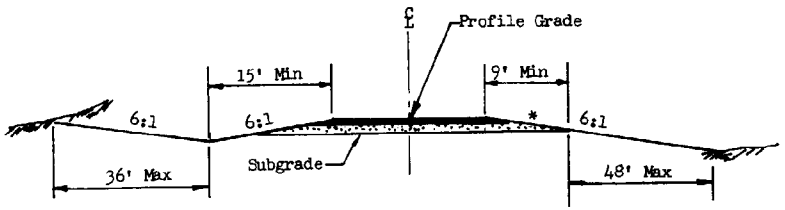

MINIMUM SLOPES

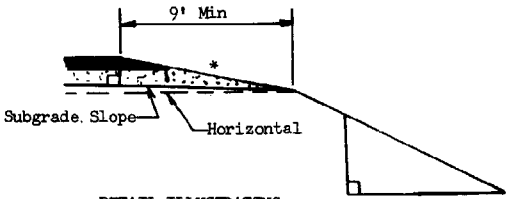

DETAIL ILLUSTRATING SUBGRADE & EMBANKMENT SLOPE CONTROL

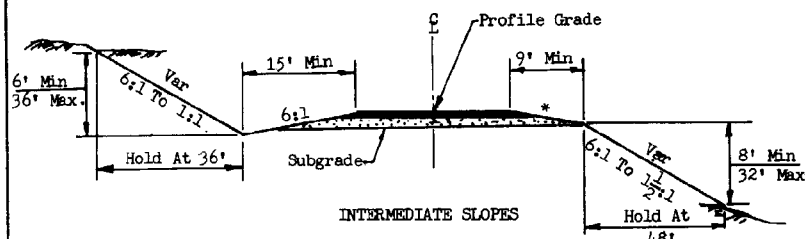

INTERMEDIATE SLOPES

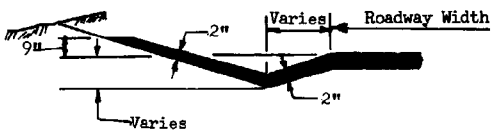

PAVED GUTTER IN CUTS

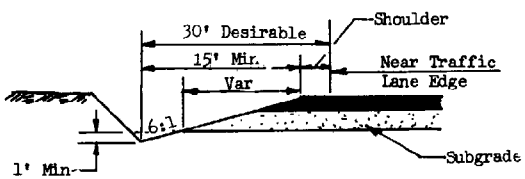

MINIMUM DITCH CONDITIONS

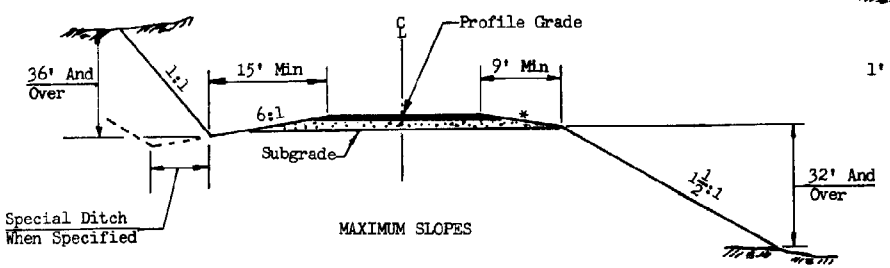

MAXIMUM SLOPES

TYPICAL SECTIONS

DESIGN APPROVED	STATE OF ARIZONA DEPARTMENT OF TRANSPORTATION DIVISION OF HIGHWAYS STANDARD DRAWINGS	REV. 1/83
APPROVED FOR DISTRIBUTION	SLOPES, CLASS A & B ROADWAYS	DRAWING NO. C-02.20

GENERAL NOTES

1. Roadway width, cut ditch, superelevation, and type and thickness of roadway surfacing will be shown on project plans.
2. For cuts up to 6' use 5' semi-tangents for slope rounding. For each additional foot of cut add 1' to semi-tangent to 11' maximum.
3. Wetted perimeter should not extend above subgrade in unpaved ditch.
4. Pavement structure slopes are relative to subgrade slope. Slopes beyond the pavement structure, such as embankment and cut slopes, are relative to horizontal.

*Variable to 4:1 maximum

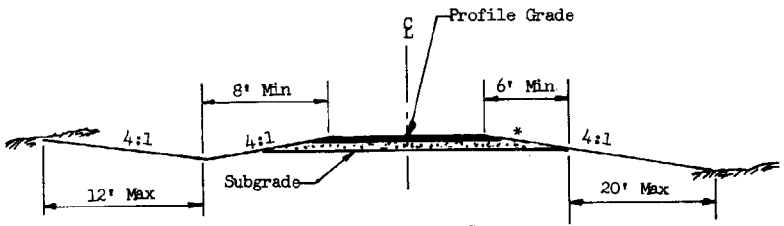

MINIMUM SLOPES

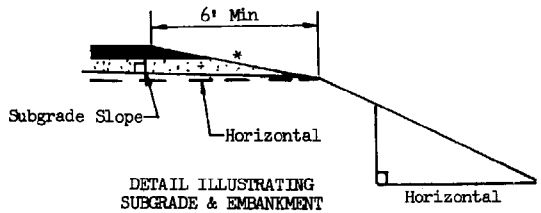

DETAIL ILLUSTRATING SUBGRADE & EMBANKMENT SLOPE CONTROL

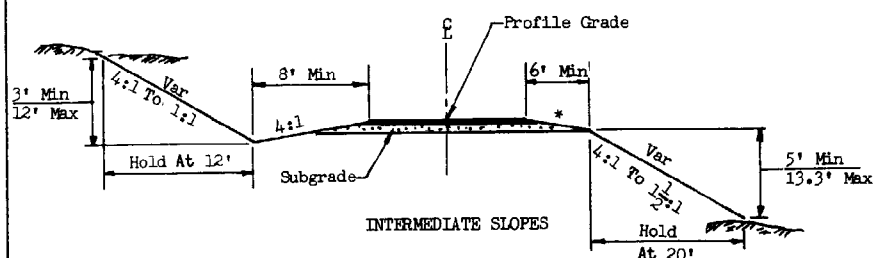

INTERMEDIATE SLOPES

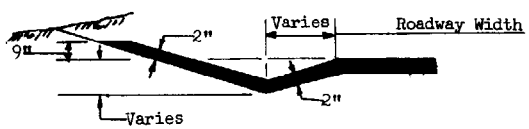

PAVED GUTTER IN CUTS

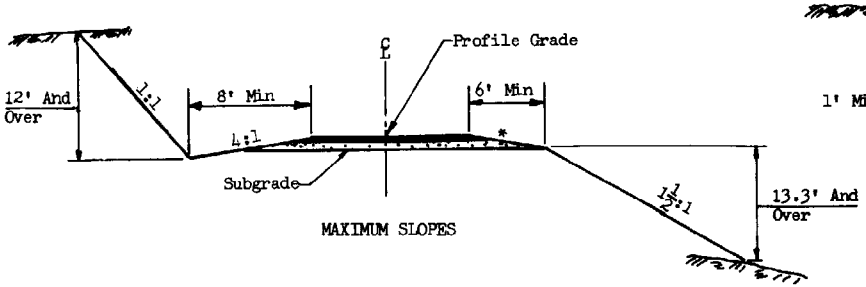

MAXIMUM SLOPES

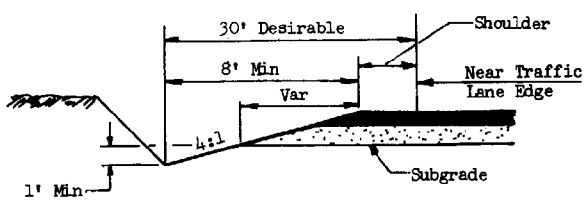

MINIMUM DITCH CONDITIONS

TYPICAL SECTIONS

DESIGN APPROVED	STATE OF ARIZONA DEPARTMENT OF TRANSPORTATION DIVISION OF HIGHWAYS STANDARD DRAWINGS	REV. 1/83
APPROVED FOR DISTRIBUTION	SLOPES, CLASS C & D ROADWAYS	DRAWING NO. C-02.30

CUMULATIVE PERCENT OF CROWN "C" FOR EACH FOOT RIGHT OR LEFT OF ℄

W = FULL WIDTH OF ROADWAY - FEET

X →	2'	4'	6'	8'	10'	12'	14'	16'	18'	20'	22'	24'	26'	28'	30'	32'	34'	36'	38'	40'	42'	44'
90	0.20	0.79	1.78	3.16	4.94	7.11	9.68	12.64	16.00	19.75	23.90	28.44	33.38	38.72	44.44	50.57	57.09	64.00	71.31	79.01	87.11	95.61
88	0.21	0.83	1.86	3.31	5.17	7.44	10.12	13.22	16.74	20.66	25.00	29.75	34.92	40.50	46.49	52.89	59.71	66.94	74.59	82.64	91.12	C
86	0.22	0.87	1.95	3.46	5.41	7.79	10.60	13.85	17.52	21.63	26.18	31.15	36.56	42.40	48.67	55.38	62.52	70.09	78.10	86.53	95.40	
84	0.23	0.91	2.04	3.63	5.67	8.16	11.11	14.51	18.37	22.68	27.44	32.65	38.32	44.44	51.02	58.05	65.53	73.47	81.86	90.70	C	
82	0.24	0.95	2.14	3.81	5.95	8.57	11.66	15.23	19.27	23.80	28.79	34.27	40.21	46.64	53.54	60.92	68.77	77.10	85.90	95.18		
80	0.25	1.00	2.25	4.00	6.25	9.00	12.25	16.00	20.25	25.00	30.25	36.00	42.25	49.00	56.25	64.00	72.25	81.00	90.25	C		
78	0.26	1.05	2.37	4.20	6.57	9.47	12.89	16.83	21.30	26.30	31.82	37.87	44.44	51.54	59.17	67.32	76.00	85.21	94.94			
76	0.28	1.11	2.49	4.43	6.93	9.97	13.57	17.73	22.44	27.70	33.52	39.89	46.81	54.29	62.33	70.91	80.06	89.75	C			
74	0.29	1.17	2.63	4.67	7.30	10.52	14.32	18.70	23.67	29.22	35.35	42.07	49.38	57.27	65.74	74.80	84.44	94.67				
72	0.31	1.23	2.78	4.94	7.72	11.11	15.12	19.75	25.00	30.86	37.35	44.44	52.16	60.49	69.44	79.01	89.20	C				
70	0.33	1.31	2.94	5.22	8.16	11.76	16.00	20.90	26.45	32.65	39.51	47.02	55.18	64.00	73.47	83.59	94.37					
68	0.35	1.38	3.11	5.54	8.65	12.46	16.95	22.15	28.03	34.60	41.87	49.83	58.48	67.82	77.85	88.58	C					
66	0.37	1.47	3.30	5.87	9.18	13.21	17.99	23.49	29.73	36.71	44.41	52.86	62.03	71.94	82.59	93.97						
64	0.39	1.56	3.52	6.25	9.77	14.06	19.14	25.00	31.64	39.06	47.27	56.25	66.02	76.56	87.89	C						
62	0.42	1.66	3.75	6.66	10.41	14.98	20.40	26.64	33.71	41.62	50.36	59.94	70.34	81.58	93.65							
60	0.44	1.78	4.00	7.11	11.11	16.00	21.78	28.44	36.00	44.44	53.78	64.00	75.11	87.11	C							
58	0.48	1.90	4.28	7.61	11.89	17.12	23.31	30.44	38.52	47.56	57.55	68.49	80.38	93.22								
56	0.51	2.04	4.59	8.16	12.76	18.37	25.00	32.65	41.33	51.02	61.73	73.47	86.22	C								
54	0.55	2.19	4.94	8.78	13.72	19.75	26.89	35.12	44.44	54.87	66.39	79.01	92.73									
52	0.59	2.37	5.33	9.47	14.79	21.30	28.99	37.87	47.93	59.17	71.60	85.21	C									
50	0.64	2.56	5.76	10.24	16.00	23.04	31.36	40.96	51.84	64.00	77.44	92.16										
48	0.69	2.78	6.25	11.11	17.36	25.00	34.03	44.44	56.25	69.44	84.03	C										
46	0.76	3.02	6.81	12.10	18.90	27.22	37.05	48.39	61.25	75.61	91.49											
44	0.83	3.31	7.44	13.22	20.66	29.75	40.50	52.89	66.94	82.64	C											
42	0.91	3.63	8.16	14.51	22.68	32.65	44.44	58.05	73.47	90.70												
40	1.00	4.00	9.00	16.00	25.00	36.00	49.00	64.00	81.00	C												
38	1.11	4.43	9.97	17.73	27.70	39.89	54.29	70.91	89.75													
36	1.23	4.94	11.11	19.75	30.86	44.44	60.49	79.01	C													
34	1.38	5.50	12.46	22.15	34.60	49.83	67.82	88.58														
32	1.56	6.25	14.06	25.00	39.06	56.25	76.56	C														
30	1.78	7.11	16.00	28.44	44.44	64.00	87.11															
28	2.04	8.16	18.37	32.65	51.02	73.47	C															
26	2.37	9.47	21.30	37.87	59.17	85.21																
24	2.78	11.11	25.00	44.44	69.44	C																
22	3.31	13.22	29.75	52.89	82.64																	
20	4.00	16.00	36.00	64.00	C																	
18	4.94	19.75	44.44	79.01																		
16	6.25	25.00	56.25	C																		
14	8.16	32.65	73.47																			
12	11.11	44.44	C																			

FORMULA

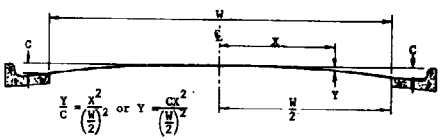

$$\frac{Y}{C} = \left(\frac{X}{\frac{W}{2}}\right)^2 \text{ or } Y = \frac{CX^2}{\left(\frac{W}{2}\right)^2}$$

USE OF TABLE

Example:

Assume W = 40 ft. and C = 0.45 ft.
Find Y for X = 8 ft.

Table shows Y = 16.00% of C,
or 0.16 X 0.45' = 0.072 ft.

DESIGN APPROVED	STATE OF ARIZONA DEPARTMENT OF TRANSPORTATION DIVISION OF HIGHWAYS STANDARD DRAWINGS	REV. 1/83
APPROVED FOR DISTRIBUTION	PAVEMENT CROWN, PARABOLIC	DRAWING NO. C-02.40

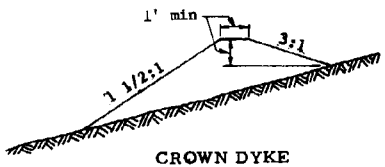

CROWN DYKE

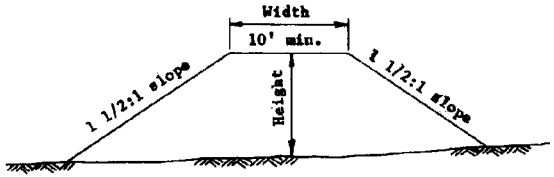

TYPE A DYKE

GENERAL NOTES

1. Dimensions of ditches and dykes, as shown on plans, are top width, height and length.
2. Ditches shall be constructed with a minimum grade to prevent erosion. Ditch outlet treatment shall be as provided on plans.
3. See Std. C-03.20 for parallel channel and dyke treatment with respect to recovery area.

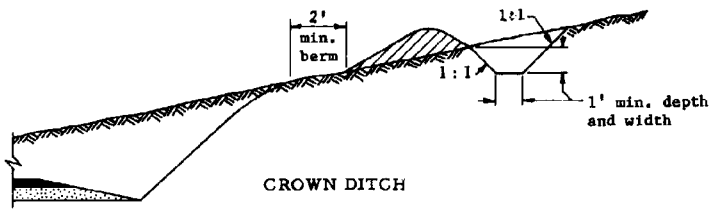

CROWN DITCH

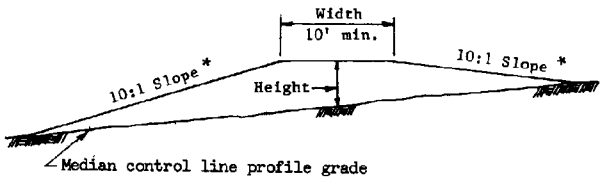

TYPE B TRANSVERSE MEDIAN DYKE

* Slope relative to grade of median at intersection with toe.

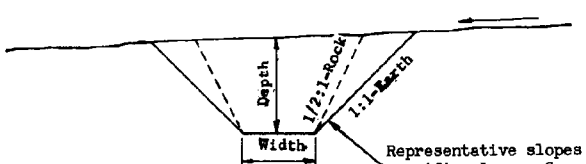

Representative slopes only. For specific slopes, See plans.

GENERAL CHANNEL SLOPES

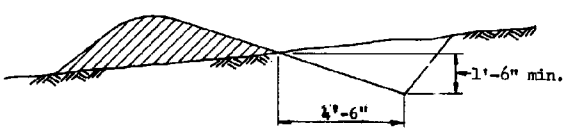

GRADER DITCH

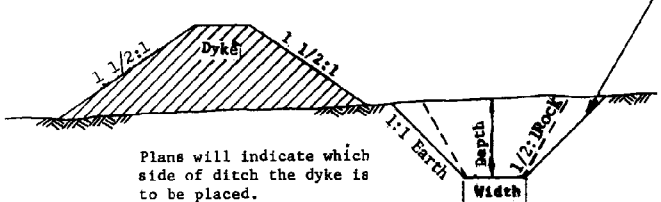

Plans will indicate which side of ditch the dyke is to be placed.

DITCH AND DYKE

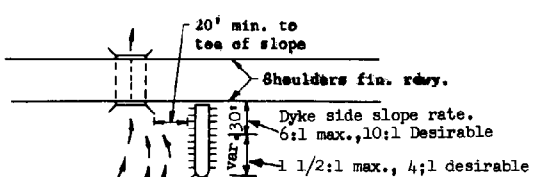

TYPICAL DYKE INSTALLATION AT STRUCTURE

Place dykes at structures to create a water cushion.

DESIGN APPROVED	STATE OF ARIZONA DEPARTMENT OF TRANSPORTATION DIVISION OF HIGHWAYS STANDARD DRAWINGS	REV. 1/83
APPROVED FOR DISTRIBUTION	DITCHES AND DYKES	DRAWING NO. C-03.10

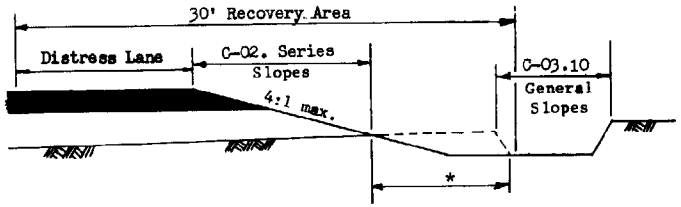

* If channel lies within recovery area, use continuation of emb. slope for inner channel slope and 4:1 slope rate for outer channel slope.

CHANNEL

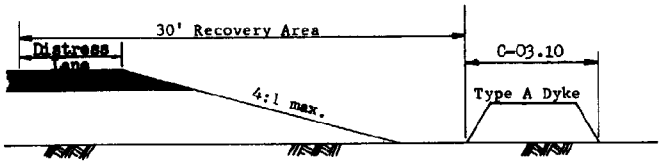

DYKE OUTSIDE RECOVERY AREA

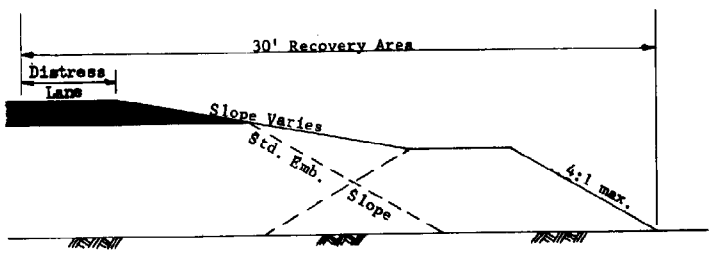

DYKE WITHIN RECOVERY AREA

GENERAL NOTES

See also Std. C-03.10

DESIGN APPROVED	STATE OF ARIZONA DEPARTMENT OF TRANSPORTATION DIVISION OF HIGHWAYS STANDARD DRAWINGS	REV. 1/83
APPROVED FOR DISTRIBUTION	CHANNELS & DYKES TYP. PARALLEL INSTALLATIONS	DRAWING NO. C-03.20

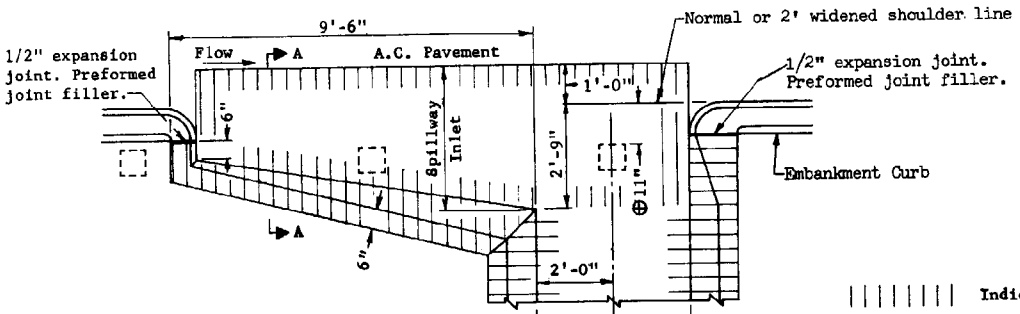

SINGLE INLET

Indicates inlet

Indicates spillway

Preferred guard rail post location.

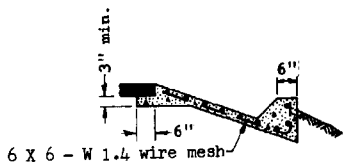

SECTION A-A

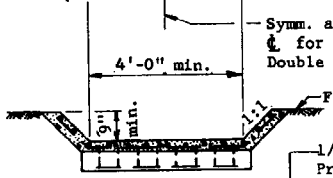

SPILLWAY SECTION

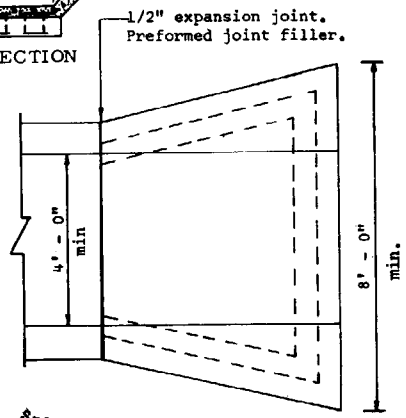

GENERAL NOTES

1. Concrete for the spillway inlet, spillway and outlet shall be Class B.
2. Where rock is encountered, the outlet may be omitted.
3. When outlet is used, the wire mesh shall extend through the joint into the outlet in lieu of bending into the key.
4. Spillway invert slope shall be uniformly downward from A to B.

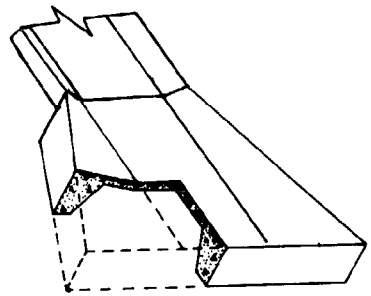

OUTLET DETAIL

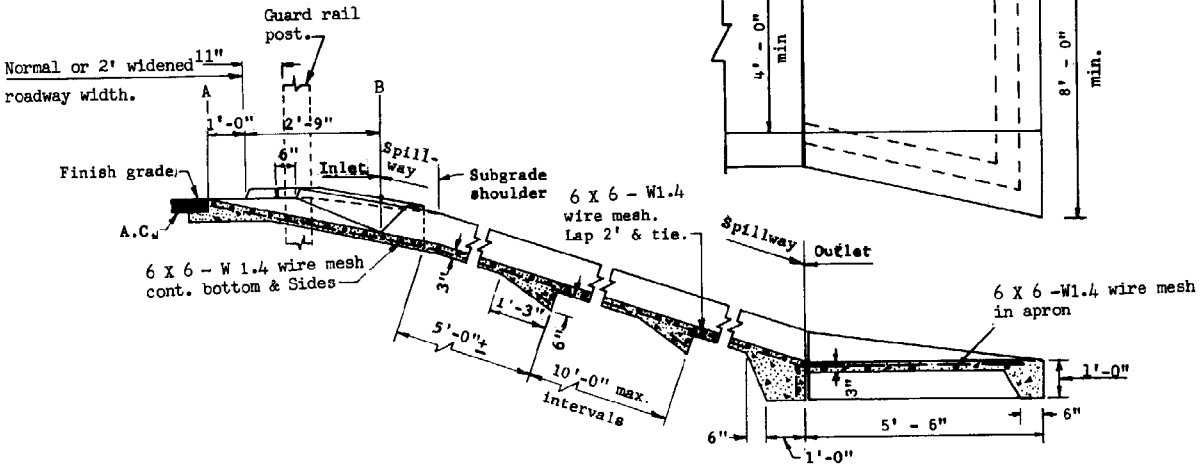

SECTION ON SPILLWAY ℄
DOUBLE INLET

DESIGN APPROVED	STATE OF ARIZONA DEPARTMENT OF TRANSPORTATION DIVISION OF HIGHWAYS STANDARD DRAWINGS	REV. 1/83
APPROVED FOR DISTRIBUTION	SPILLWAY, EMBANKMENT	DRAWING NO. C-04.10

GENERAL NOTES

1. Round all exposed concrete corners.
2. Tank, stub, trash rack and angle supports shall be shop fabricated, welded and galvanized in accordance with ASHTO M 36.
3. Stub shall have annular corrugation. Downdrain piping beyond stub may be either annular or helical.
4. Permissable couplings shall be mechanical, heat-shrinkable polyolatin sheet; one piece lap type neoprene sheet or slip seam; all 12" min. width and 18 ga. min..
5. Inlet invert slope shall be uniformly downward from one foot inside of embankment curb base.
6. Inlet and outlet concrete shall be Class B. Embankment curb concrete shall be in accordance with Standard Specifications.

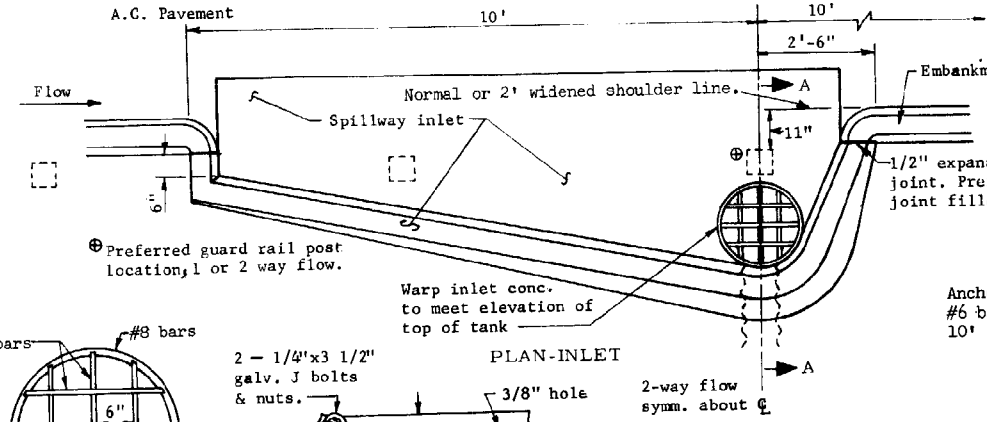

PLAN-INLET

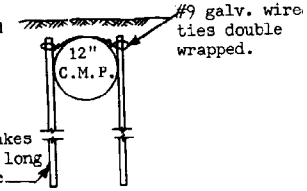

DETAIL ANCHOR

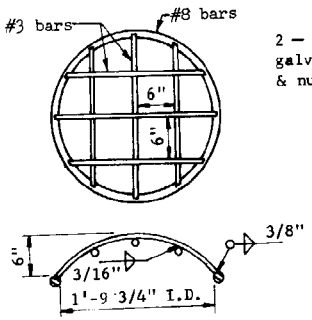

DETAIL-TRASH RACK
STEEL TO BE GALVANIZED AFTER FABRICATION

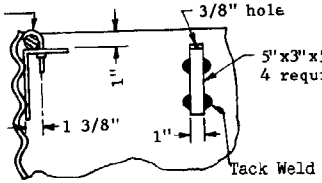

DETAIL-ANGLE SUPPORTS FOR TRASH RACK

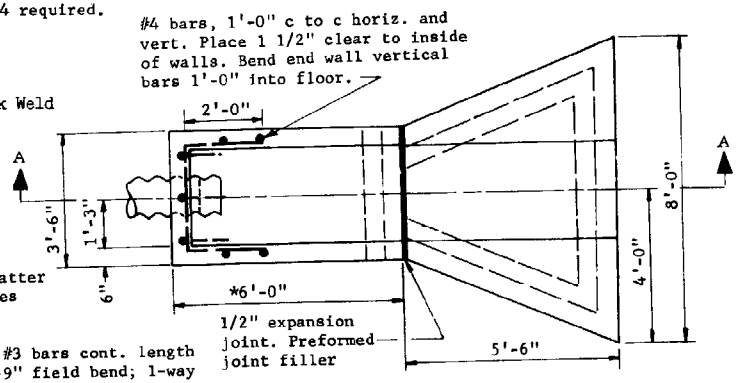

OUTLET-HEADWALL AND CONCRETE APRON

*Varies with fill slope and pipe cover.

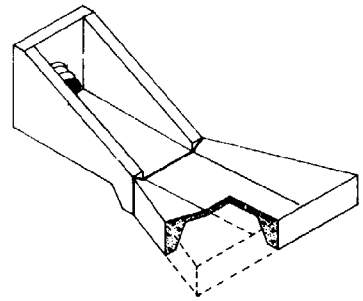

OUTLET DETAIL

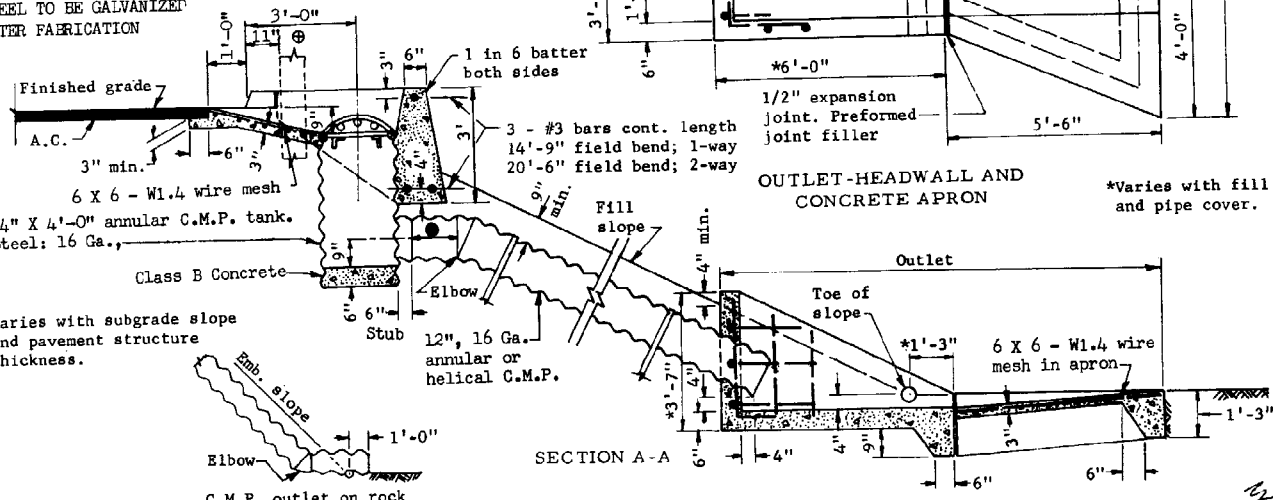

SECTION A-A

DESIGN APPROVED	STATE OF ARIZONA DEPARTMENT OF TRANSPORTATION DIVISION OF HIGHWAYS STANDARD DRAWINGS	REV. 1/83
APPROVED FOR DISTRIBUTION	DOWNDRAIN, EMBANKMENT	DRAWING NO. C-04.20

C-02.20 Slopes

C-02.10 Slopes

◑	Embankment Height 5'	6'	7'	8'	9'	10'	11'	12'	13'	14'	15'	16'	17'	18'	19'	20'	21'	22'	23'	24'	25'	26'	27'	28'	29'	30'	31'	32'
12"	32	37	43	49	50																							
13"	33	38	44			51																						
14"							52																					
15"	34	39	45					53																				
16"									54																			
17"	35	40	46							55																		
18"																												
19"	36	41	47								56																	
20"												57																
21"	37	42	48										58															
22"														59														
23"	38	43	49												60													
24"																	61											
25"	39	44	50															62										
26"																			63									
27"	40	45	51																	64								
28"																					65							
29"	41	46	52																			66						
30"																							67					
31"	42	47	53																					68				
32"																									69			
33"	43	48	54																							70		
34"																											71	
35"	44	49	55																									72
36"																												

C-02.30 Slopes

◑	Embankment Height 5'	6'	7'	8'	9'	10'	11'	12'	13'
12"									
13"	22								
14"									
15"		23							
16"									
17"			24						
18"									
19"				25					
20"									
21"									
22"				26					
23"					27				
24"									
25"						28			
26"									
27"									
28"						29			
29"									
30"									
31"						30			
32"							31		
33"									
34"								32	
35"									33
36"									

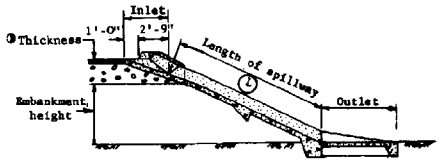

GENERAL NOTES

1. For C-02.10 slopes with embankment height over 24', L = L for embankment height from table + 2.24(emb. height - 24).
2. For C-02.20 slopes with embankment height over 32', L = L for 32' embankment height from table + 1.8(emb. height - 32).
3. For C-02.30 slopes with embankment height over 13', L = L for 13' embankment height from table + 1.8(emb. height - 13).

DESIGN APPROVED	STATE OF ARIZONA DEPARTMENT OF TRANSPORTATION DIVISION OF HIGHWAYS STANDARD DRAWINGS	REV. 1/83
APPROVED FOR DISTRIBUTION	SPILLWAY, EMBANKMENT LENGTH TABLE	DRAWING NO C-04.30

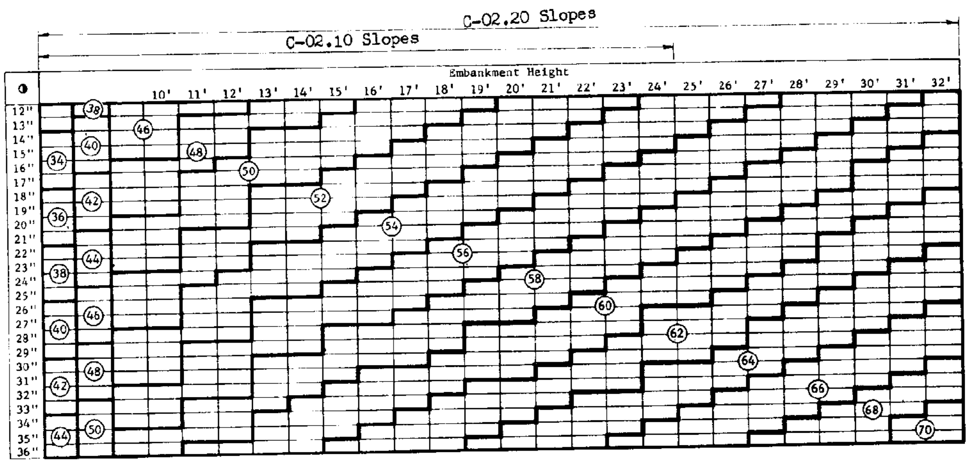

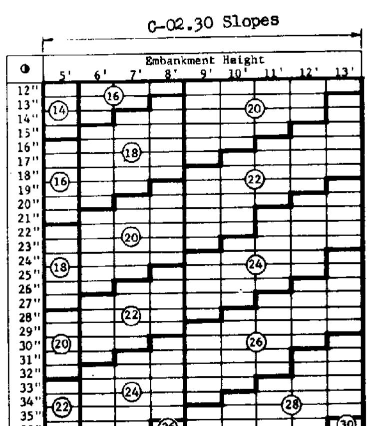

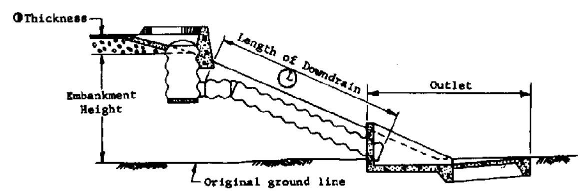

GENERAL NOTES

1. For C-02.10 slopes with embankment height over 24', L = L for embankment height from table + 2.24(emb. height - 24).
2. For C-02.20 slopes with embankment height over 32', L = L for 32' embankment height from table + 1.8(emb. height - 32).
3. For C-02.30 slopes with embankment height over 13', L = L for 13' embankment height from table + 1.8(emb. height - 13).

DESIGN APPROVED / APPROVED FOR DISTRIBUTION	STATE OF ARIZONA DEPARTMENT OF TRANSPORTATION DIVISION OF HIGHWAYS STANDARD DRAWINGS	REV. 1/83
	DOWNDRAIN, EMBANKMENT, LENGTH TABLE	DRAWING NO. C-04.40

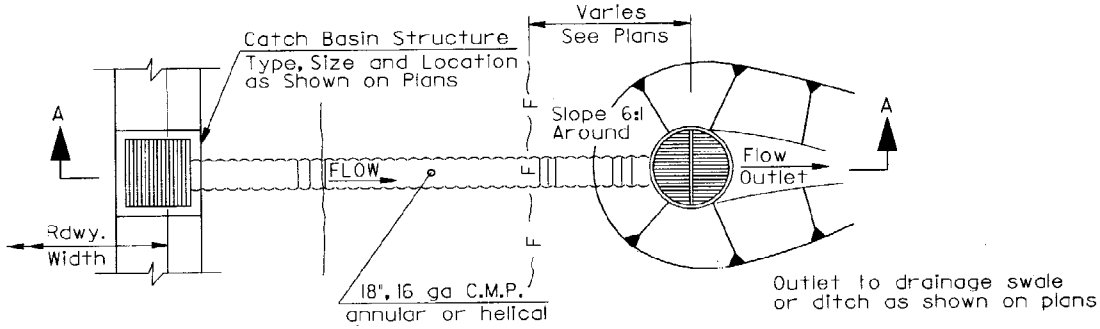

PLAN

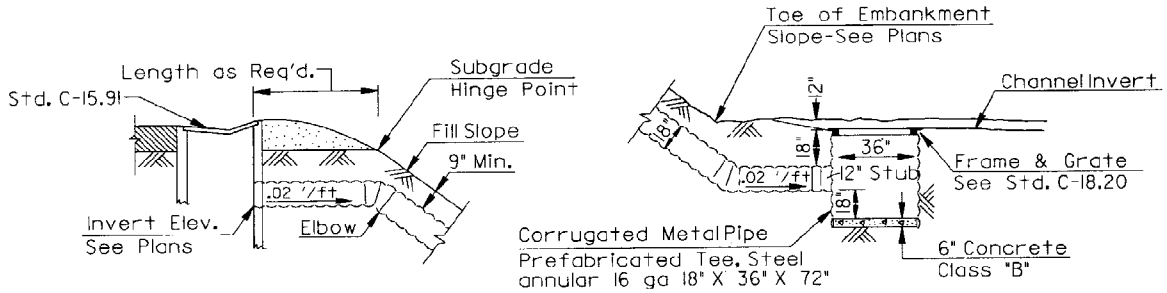

SECTION A-A

GENERAL NOTES

1. Stub shall have annular corrugation. Downdrain piping beyond stub may be either annular or helical.

2. Couplings shall be mechanical heat-shrinkable polyolefin sheet; one piece lap type neoprene sheet or slip seam; all 12" min. width and 18 ga. min.

3. Maximum Q Allow = 8 cfs
   Minimum V = 1 fps

DESIGN APPROVED George R. Hale	STATE OF ARIZONA DEPARTMENT OF TRANSPORTATION DIVISION OF HIGHWAYS STANDARD DRAWINGS	10/89
APPROVED FOR DISTRIBUTION	DOWNDRAIN ENERGY DISSIPATOR	DRAWING NO. C-04.50

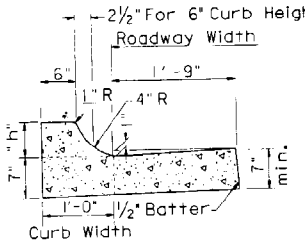

CURB & GUTTER
TYPE A

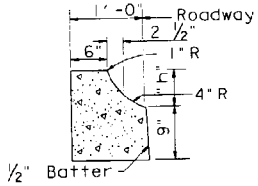

SINGLE CURB
TYPE A

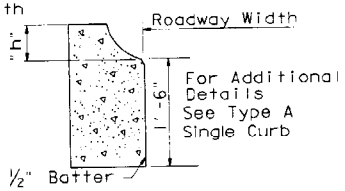

SINGLE CURB
TYPE A1

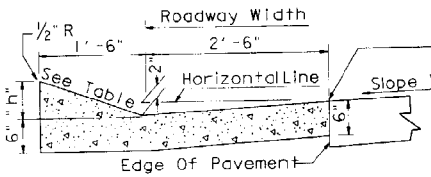

CURB & GUTTER
TYPE B & C

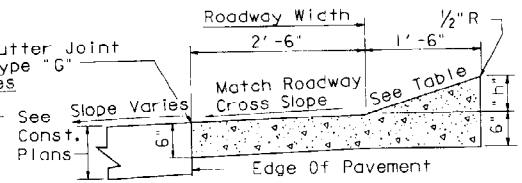

CURB & GUTTER
TYPE B-1 & C-1

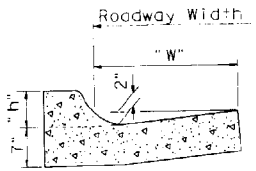

CURB & GUTTER
TYPE D, D1 & D-2

For Additional Details See Curb & Gutter Type A

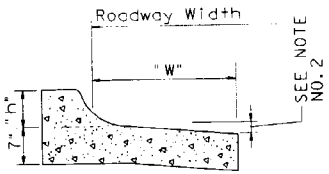

CURB & GUTTER
TYPE D-3

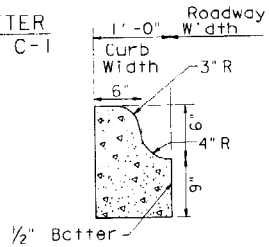

SINGLE CURB
TYPE G

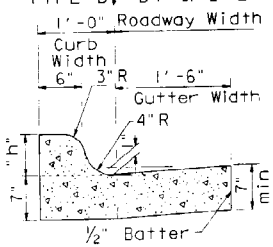

CURB & GUTTER
TYPE G

C & G TYPE	CURB HEIGHT "h"	GUTTER WIDTH "w"	SLOPE
B	6"	2'-6"	3 : 1
B-1	6"	2'-6"	3 : 1
C	3"	2'-6"	6 : 1
C-1	3"	2'-6"	6 : 1

C & G TYPE	CURB HEIGHT "h"	GUTTER WIDTH "w"
D	x	2'-0"
D-1	x	2'-6"
D-2	x	4'-6"
D-3	x	2'-0"

x See Construction Plans

GENERAL NOTES

SINGLE CURB AND CURB AND GUTTER

1. Single curb, and curb and gutter may be constructed by the use of forms or the concrete may be extruded.
2. When the pavement section slopes away from the gutter, the slope of the gutter shall match the pavement cross slope.
3. Two inch deep contraction joints shall be placed in the curb and the gutter at locations which match the joints in adjacent portland cement concrete pavement and approximate 15 foot centers when adjacent to asphaltic concrete pavement. Joints shall be either hand tooled or sawed.
4. One-half inch thick expansion joints shall be located at tangent points in curb returns, at structures and at maximum 60 foot intervals. The one-half inch joint filler shall extend the full depth of the concrete.
5. Concrete shall be finished with a steel trowel followed by brushing with a fine brush along the length of the curb and gutter.
6. All exposed edges and hand tooled joints shall be finished with a tool having a one-fourth inch radius unless a larger radius is indicated.

EMBANKMENT CURB

1. No additional finishing will be required after extrusion or removal of the forms when curb presents a neat appearance and the surface is uniform in texture and color.
2. The curb shall conform to the cross section as shown except that the horizontal dimensions shall not vary more than one-half inch.

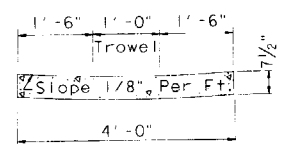

VALLEY GUTTER

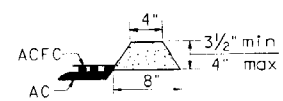

EMBANKMENT CURB

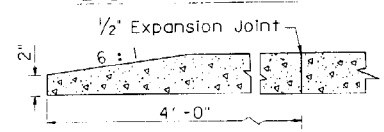

CURB TERMINAL SECTION

DESIGN APPROVED	STATE OF ARIZONA DEPARTMENT OF TRANSPORTATION DIVISION OF HIGHWAYS STANDARD DRAWINGS	REV. 10/89
APPROVED FOR DISTRIBUTION	SINGLE CURB, CURB & GUTTER, EMBANKMENT CURB	DRAWING NO. C-05.10

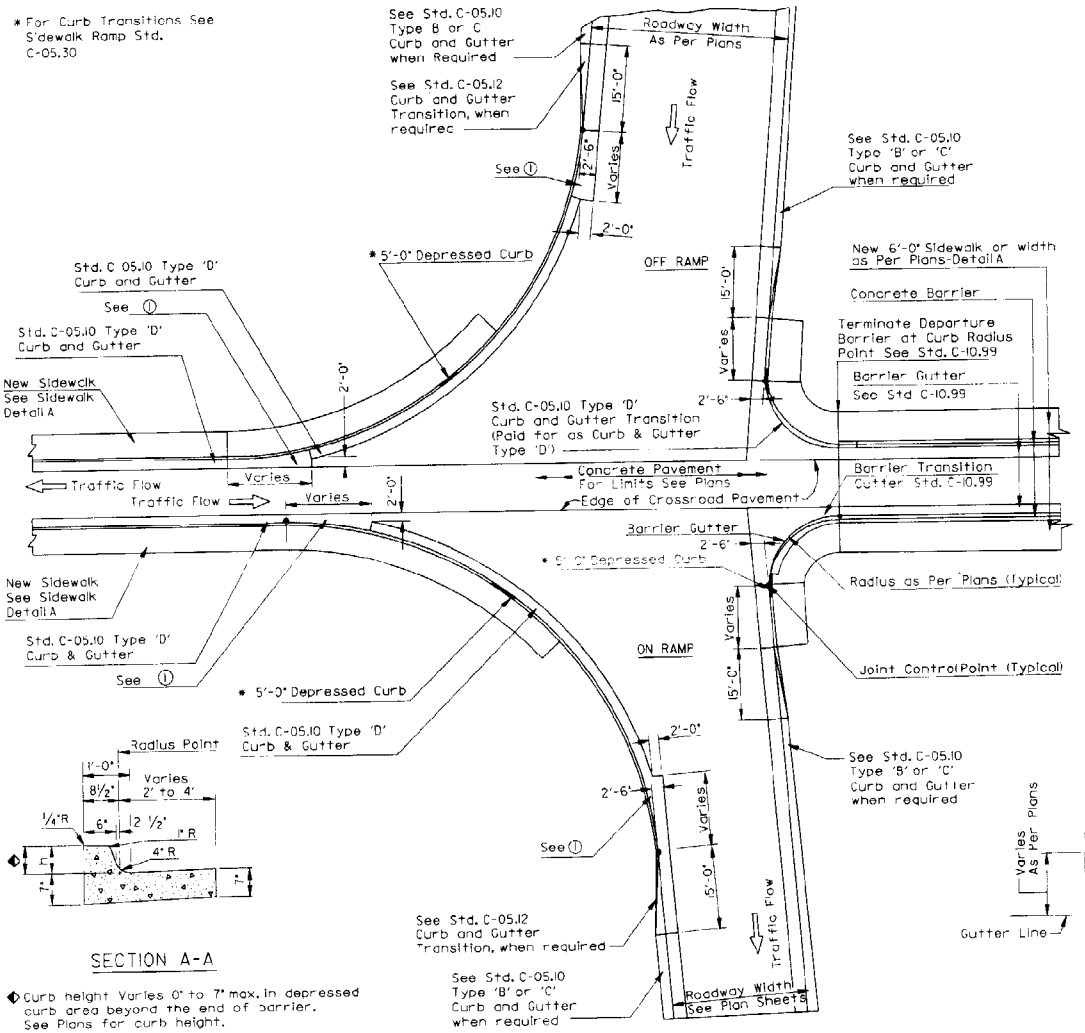

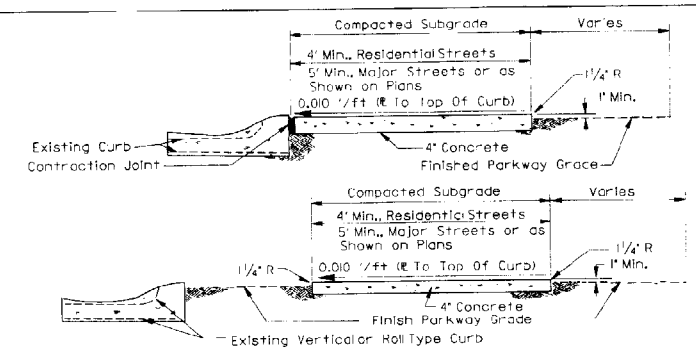

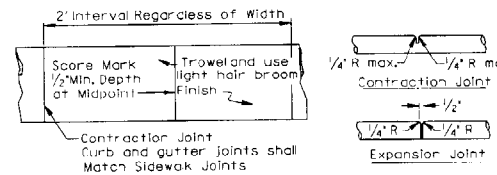

Notes:

1.) Expansion Joint Filler shall be ½" Bituminous Type Preformed Expansion Joint Filler.

2.) Expansion joints shall be constructed at the end of all pours, at points of curvature at adjoining structures, at driveways and at a maximum spacing of 100'. The expansion joint must provide for complete separation of the sidewalk from adjoining concrete and extended from the surface of the sidewalk to 1" into the subgrade.

SIDEWALK DETAIL A

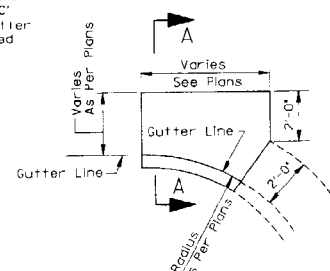

① Type 'D' Curb & Gutter Transition (Paid for as Curb & Gutter Type 'D')

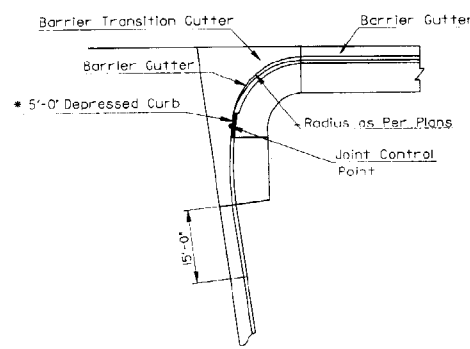

COMPOUND CURVE RADIUS

DESIGN APPROVED *George R. Hale* APPROVED FOR DISTRIBUTION	STATE OF ARIZONA DEPARTMENT OF TRANSPORTATION DIVISION OF HIGHWAYS STANDARD DRAWINGS	10/89
	RAMP CURB AND GUTTER LAYOUT	DRAWING NO. C-05.11

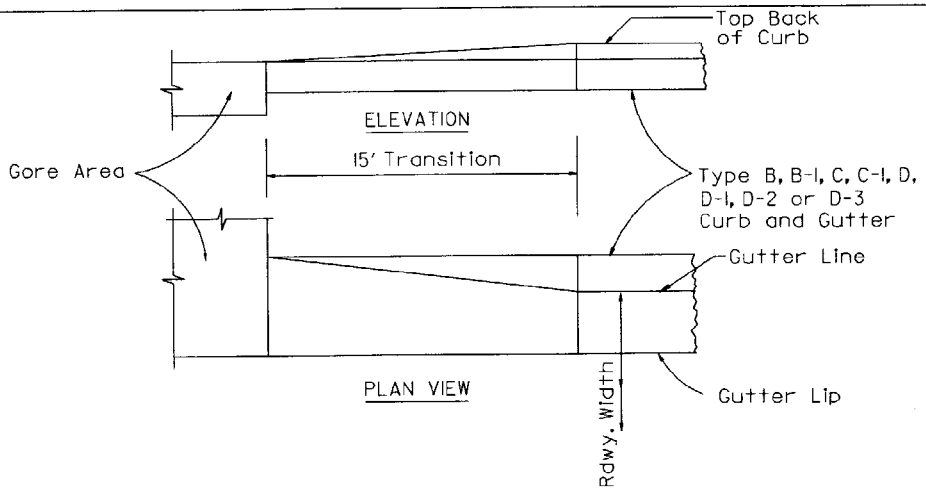

TYPE C - CURB & GUTTER TRANSITION AT PAVED GORE

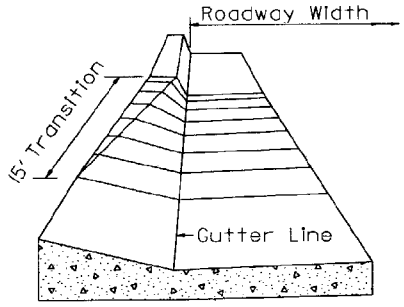

PERSPECTIVE VIEW

GENERAL NOTES:

1. All gutter flow lines shall be trowelled to an accurate grade for a width of 9". The remainder of curb and gutter shall be textured longitudinally to a light broom finish.
2. For curb and gutter with slotted drain, see Slotted Drain Stds., C-13.60 and C-15.91.
3. For additional general notes and dimensions, See Std. C-05.10.

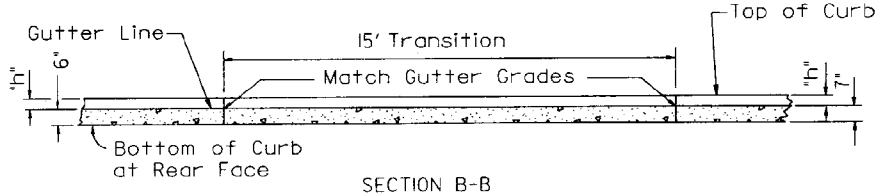

SECTION B-B

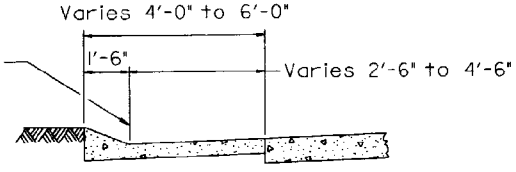

SECTION A-A

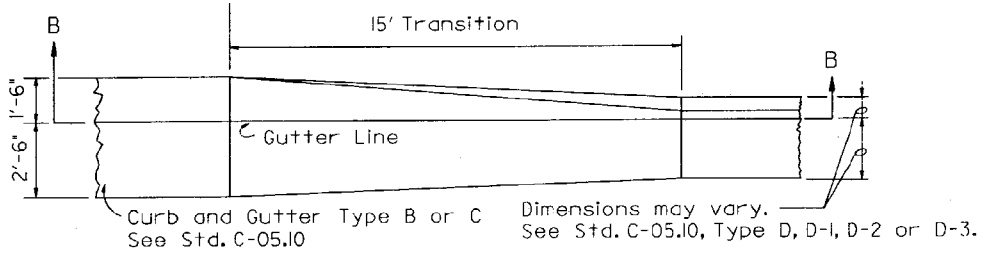

PLAN VIEW

TYPE B - CURB & GUTTER TRANSITION

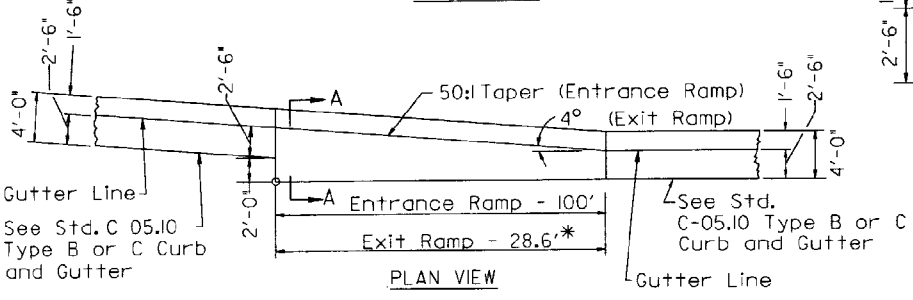

PLAN VIEW

TYPE A - CURB & GUTTER TRANSITION - AT RAMP TAPERS

*Dimension may vary where exit occurs on curves, see plans.

DESIGN APPROVED George R. Hale	STATE OF ARIZONA DEPARTMENT OF TRANSPORTATION DIVISION OF HIGHWAYS STANDARD DRAWINGS	10/89
APPROVED FOR DISTRIBUTION	CURB AND GUTTER TRANSITIONS	DRAWING NO. C-05.12

NO.	DESCRIPTION Δ

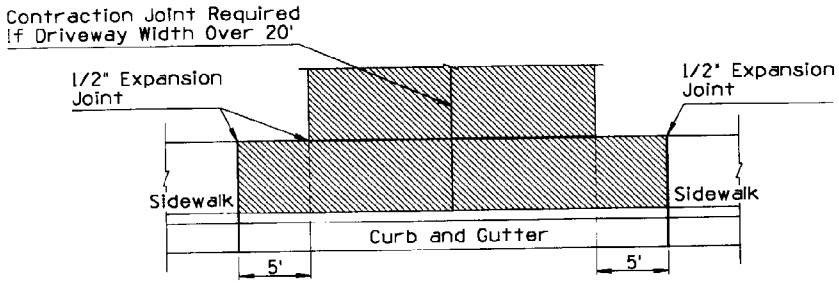

DRIVEWAY WITH SIDEWALK
ADJACENT TO CURB

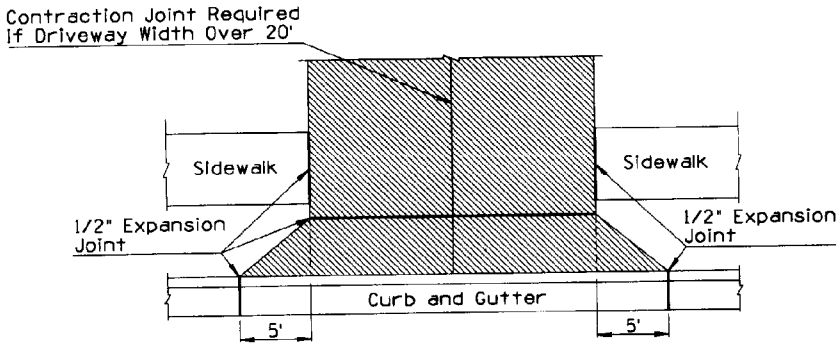

DRIVEWAY WITH SIDEWALK SETBACK

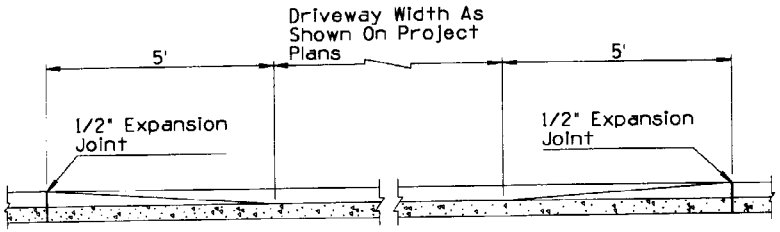

DEPRESSED CURB AT DRIVEWAY ENTRANCE

GENERAL NOTES

1. Unless otherwise specified, sidewalks shall be 4 inches in depth and driveways shall be 6 inches in depth.
2. One inch deep transverse contraction joints shall be placed in sidewalks at intervals of approximately 5 feet. If the sidewalk is over 7 feet in width, a 1 inch deep longitudinal contraction joint shall be placed in the center of the sidewalk. The maximum area of sidewalk without contraction joints shall be approximately 36 square feet. Contraction joints in driveways shall be 1 inch in depth. Joints shall be either formed or sawed. Formed joints shall be finished with a tool having a ½ inch radius.
3. One half inch expansion joints shall be located between sidewalks or driveways and all abutting structures. Maximum length of sidewalk without expansion joint shall be 60 feet. The ½ inch joint filler shall extend the full depth of the concrete.
4. Concrete shall be finished by means of a float, then steel trowelled and then broomed with a fine brush in a transverse direction.

DRIVEWAY

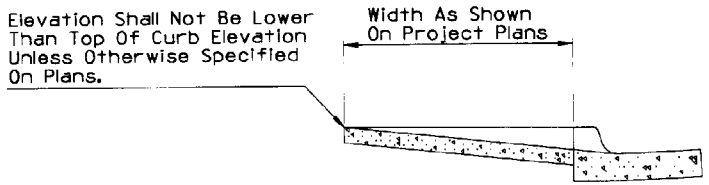

DRIVEWAY SIDEVIEW

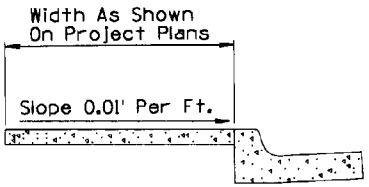

CONCRETE SIDEWALK

DESIGN APPROVED	STATE OF ARIZONA DEPARTMENT OF TRANSPORTATION DIVISION OF HIGHWAYS STANDARD DRAWINGS	REV. 3-88
APPROVED FOR DISTRIBUTION	CONCRETE DRIVEWAYS & SIDEWALKS	DRAWING NO. C-05.20

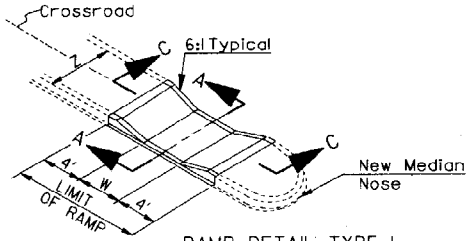

RAMP DETAIL TYPE 1

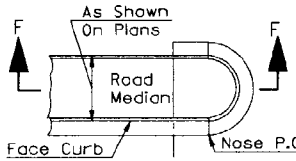

MEDIAN NOSE TRANSITION DETAIL 4

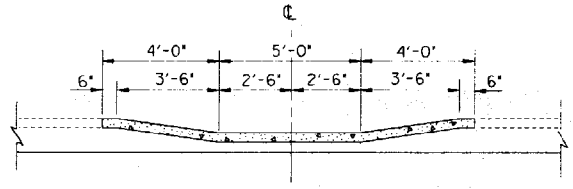

SECTION C-C

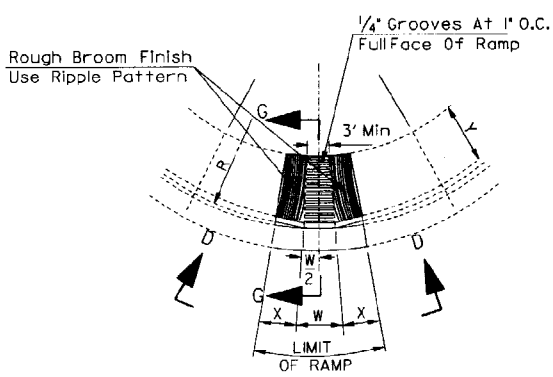

RAMP DETAIL TYPE 2

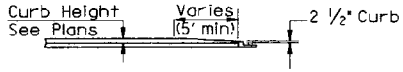

SECTION F-F

NOTE: Length of transition shall be equal to radius of median nose (5 ft. minimum). For location see plans.

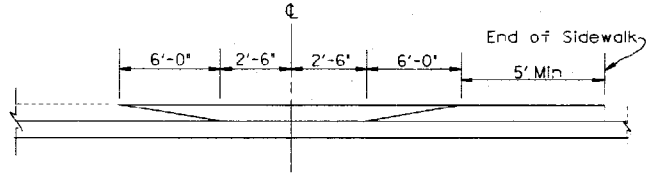

SECTION D-D

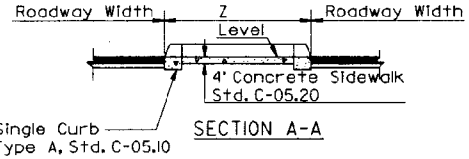

SECTION A-A

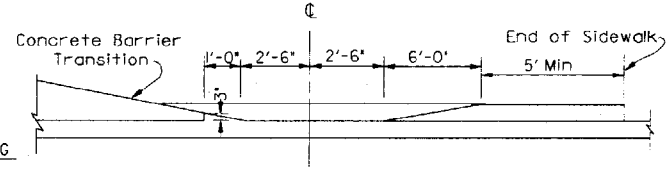

SECTION E-E

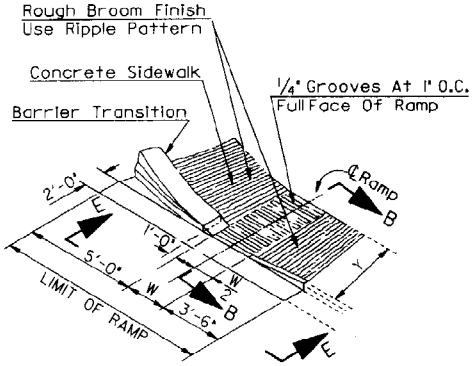

RAMP DETAIL TYPE 3

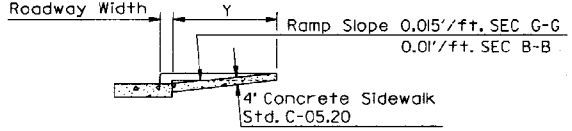

SECTION B-B & G-G

R = Per Plans
W = 5'-0"
X = 6'-0"
Y = New or Existing Width of Sidewalk Per Plans
Z = Median Width Per Plans

DESIGN APPROVED George R. Hale	STATE OF ARIZONA DEPARTMENT OF TRANSPORTATION DIVISION OF HIGHWAYS STANDARD DRAWINGS	10/89
APPROVED FOR DISTRIBUTION	SIDEWALK RAMP	DRAWING NO. C-05.30

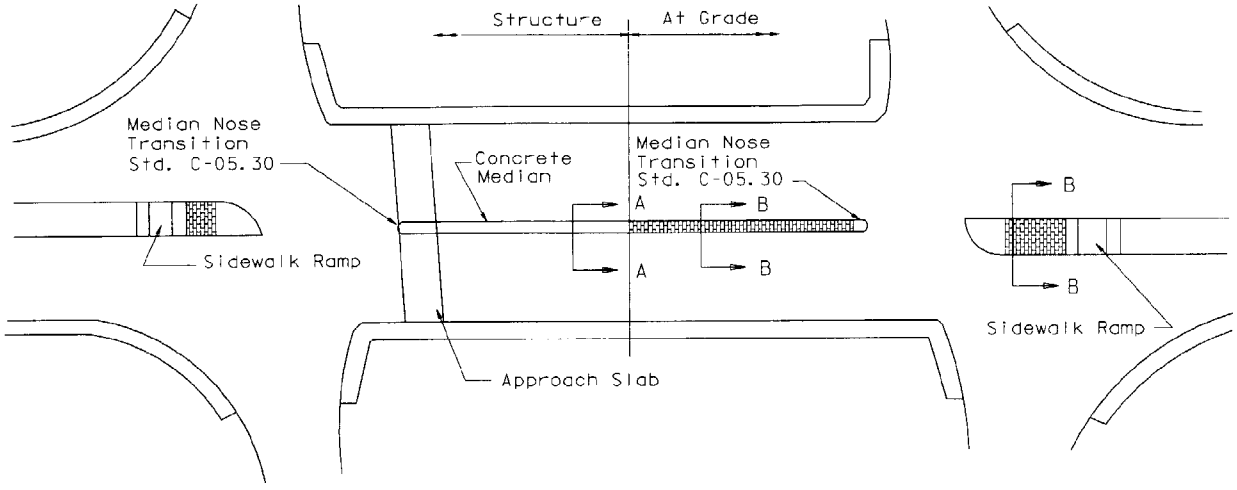

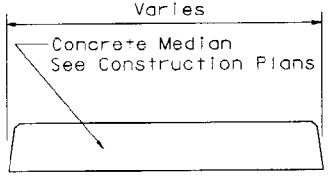

SECTION A-A

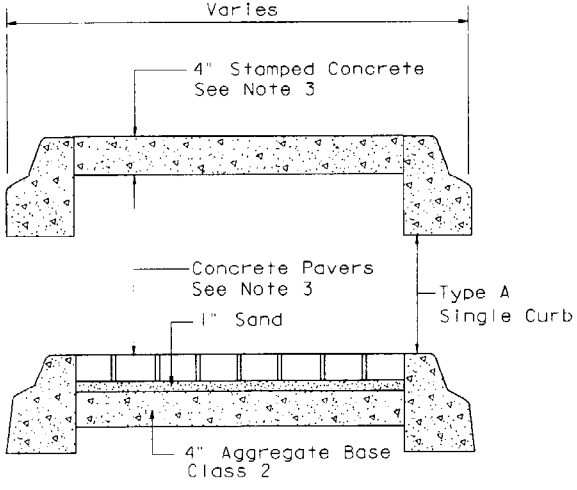

SECTION B-B

GENERAL NOTES

1. Traffic signal foundations, traffic sign foundations and pull boxes for traffic signs and traffic signals shall be installed prior to placing median paving.
2. Install 1/2" bituminous expansion joint at 30' C to C or as approved by the Engineer for Concrete Median Paving.
3. Decorative Median Paving shall be stamped concrete or concrete pavers or as specified on the project plans.
4. Decorative Median Paving shall not be placed on Median Nose transition. See Median Nose Transition Std. C-05.30.
5. 4" x 6" concrete header shall be used to end decorative paving at locations when concrete s/w ramps are not present.

DESIGN APPROVED George R. Hale APPROVED FOR DISTRIBUTION	STATE OF ARIZONA DEPARTMENT OF TRANSPORTATION DIVISION OF HIGHWAYS STANDARD DRAWINGS	10/89
	MEDIAN PAVING	DRAWING NO. C-05.40

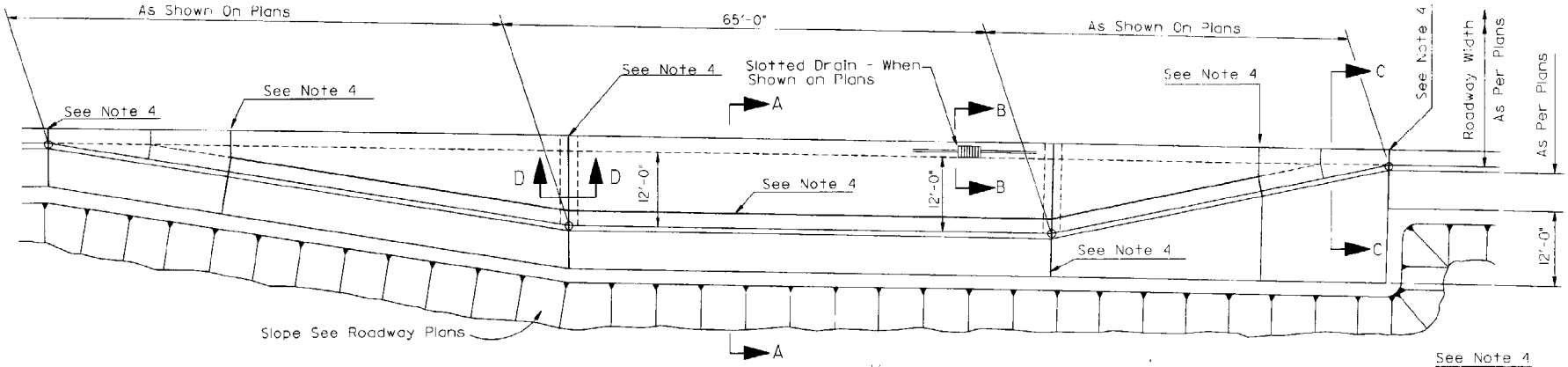

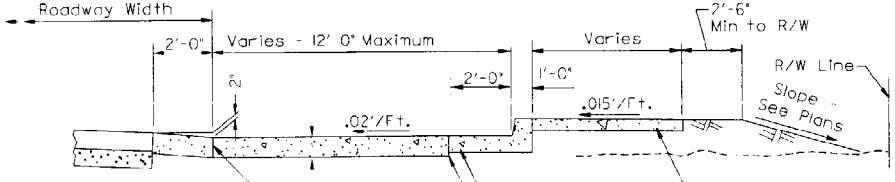

SECTION A-A

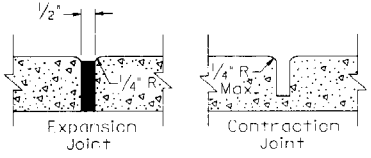

DETAIL A

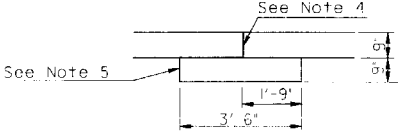

SECTION D-D

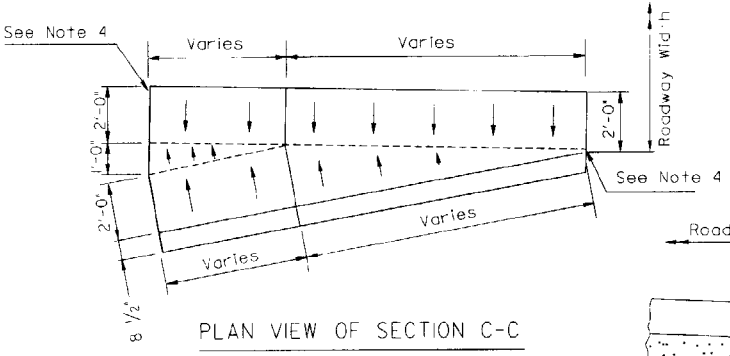

PLAN VIEW OF SECTION C-C

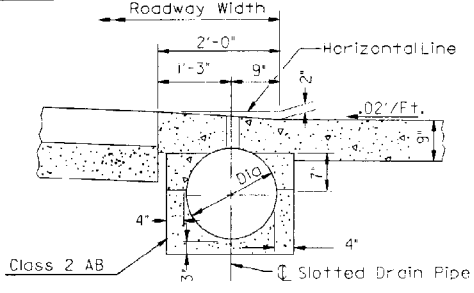

SECTION B-B

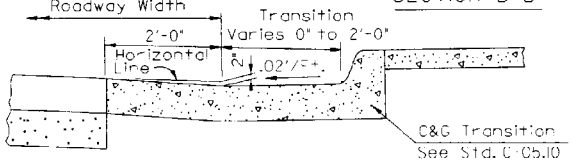

SECTION C-C

GENERAL NOTES

1.) The P.C.C.P. Surfaces within the Bus Bay Area shall be Textured Transversely. Surface Texturing to Conform to Sect. 401.

2.) Transverse Weakened Plane Joints shall be constructed at a maximum spacing of 15' and shall align with joints in the concrete curb and gutter.

3.) For additional data on Slotted Drains. See Slotted Drain Stds. C-13.60.

4.) 1/2" Expansion Joint With Preformed Joint Filler, See Detail A.

5.) Concrete Pad to be poured separately from concrete bus bay pavement.

6.) For Sidewalk Construction Details, See Std. C-05.20.

DESIGN APPROVED George R. Hale	STATE OF ARIZONA DEPARTMENT OF TRANSPORTATION DIVISION OF HIGHWAYS STANDARD DRAWINGS	10/89
APPROVED FOR DISTRIBUTION	CONCRETE BUS BAY	DRAWING NO. C-05.50

NO.	DESCRIPTION	BY	DATE

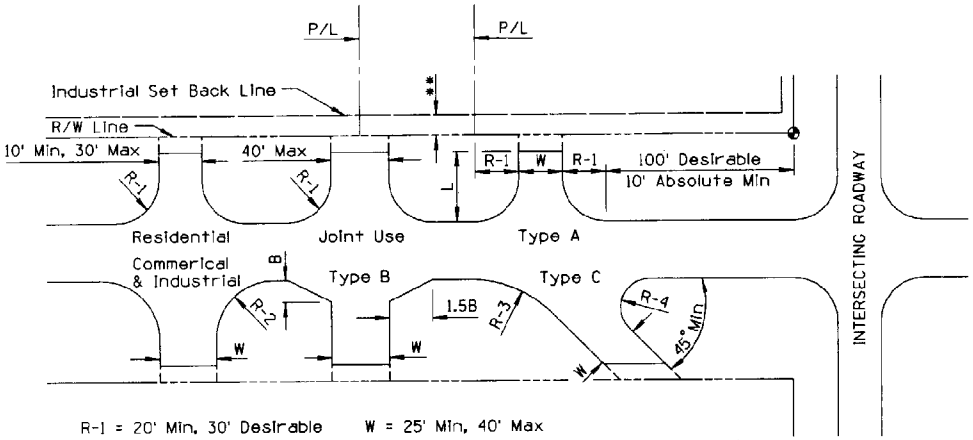

R-1 = 20' Min, 30' Desirable
R-2 = 25' Min, 40' Desirable
R-3 = 80'
R-4 = 20' Min

W = 25' Min, 40' Max
** See Proper City Or County Regulation

RURAL DEVELOPMENTS

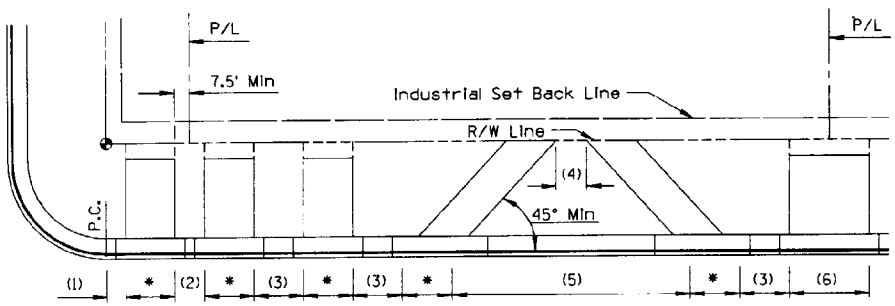

(1) 10' Min, 20' Desirable
(2) 15' Min
(3) 25' Min, 40' Desirable
(4) 40' Min
(5) One Way Couplet For Use Only On One Way Roadways
(6) 40' Max Joint Use Driveways

*Residential - 10' Min, 30' Max
Commercial - One Way: 15' Min, 30' Max
Two Way: 25' Min, 40' Max
Industrial - 20' Min, 40' Max

URBAN DEVELOPMENTS

GENERAL NOTES

1. Driveway Types:

   Residential - one providing access to a single family residence, to a duplex, or to an apartment building containing five or fewer dwelling units.

   Commercial - one providing access to an office, retail or institutional building or to an apartment building having more than five dwelling units.

   Industrial - one directly serving a substantial number of truck movements to and from loading docks of an industrial facility, warehouse or truck terminal.

2. Joint Use driveways may become desirable for landowners of adjacent properties to service both properties.
   If this is the case, only one of the two adjacent landowners need apply for the access permit, but a notorized written mutual agreement, signed by all parties involved, must accompany the application form.

3. Driveways for high volume traffic generators shall be approved individually by Traffic Engineering Section.

4. Driveways with curb returns in urban areas shall be installed only with the approval of Traffic Engineering Section.

5. Driveways and depressed curbs shall be located as noted on plans or as directed by the Engineer.

6. Drainage structures shall be provided under driveways where necessary.

7. Dimensions indicated as minimum shall be avoided whenever possible in favor of those indicated as desirable.

8. The Type "A" turnout is the preferable turnout design. Type "B" and "C" shall only be used when absolutely necessary.

9. Paved turnouts, plans notation, will be W x L, Surface Material, Type and Standard. Example: 20' x 30' A.C.T.O., Type A, Std C-06.10. Show Radius (R) graphically.

10. Construction of curb, gutter, sidewalk and drainage facilities in urban areas by the permittee along that portion of the highway frontage under permit application, may be a stipulation of the permit approval if there appears to be reasonable need.

11. Excavation or embankment for turnouts shall be included in quantities for main roadways.

12. Base material shall be the same as that shown for main roadway, unless otherwise noted.

13. Desirable sideslope rates for rural turnouts are 6:1 .

DESIGN APPROVED	STATE OF ARIZONA DEPARTMENT OF TRANSPORTATION DIVISION OF HIGHWAYS STANDARD DRAWINGS	REV.
George R. Hale		5-89
APPROVED FOR DISTRIBUTION	DRIVEWAY & TURNOUT LAYOUTS	DRAWING NO. C-06.10 Sheet 1 of 2

NO.	DESCRIPTION O.

GENERAL NOTES

1. Grade as shown on plans or as negotiated between property owner and Engineer.
2. When field conditions require modifications to plans, contact Design Engineer for assistance.
3. See Sheet 1 of 2 for all other General Notes.

◑ Breakangle greater than 6% requires a vertical curve. L= (10' Min). Vertical curve shall not encroach on roadway or sidewalk.

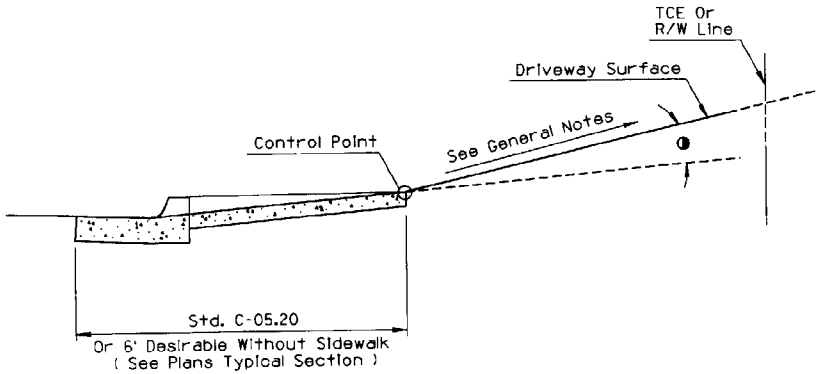

URBAN CROSS SECTION
(UP GRADE)

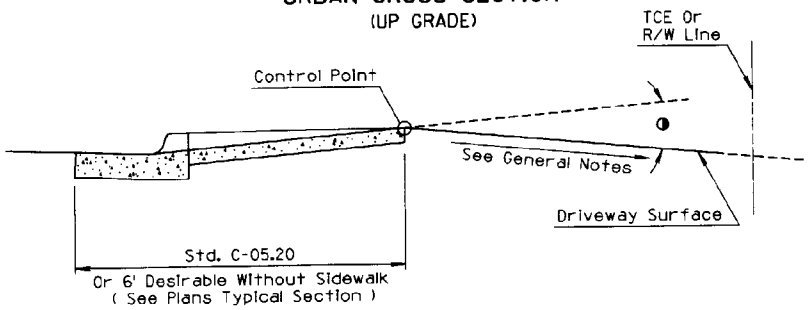

URBAN CROSS SECTION
(DOWN GRADE)

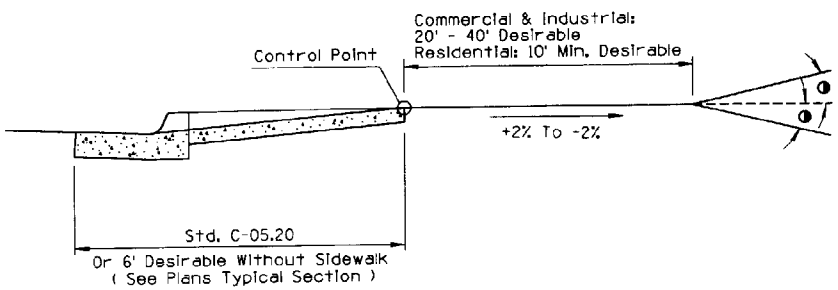

DESIRABLE URBAN CROSS SECTION

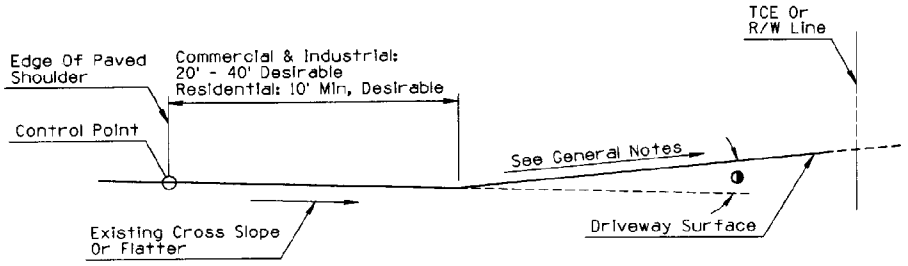

RURAL CROSS SECTION
(UP GRADE)

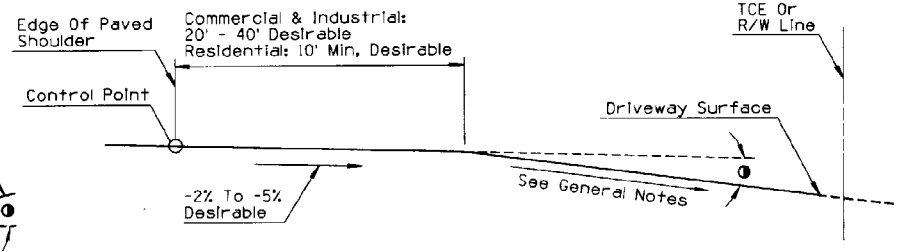

RURAL CROSS SECTION
(DOWN GRADE)

DESIGN APPROVED *George R. Hale*	STATE OF ARIZONA DEPARTMENT OF TRANSPORTATION DIVISION OF HIGHWAYS STANDARD DRAWINGS	REV. 6-89
APPROVED FOR DISTRIBUTION	DRIVEWAY & TURNOUT LAYOUTS	DRAWING NO. C-06.10 Sheet 2 of 2

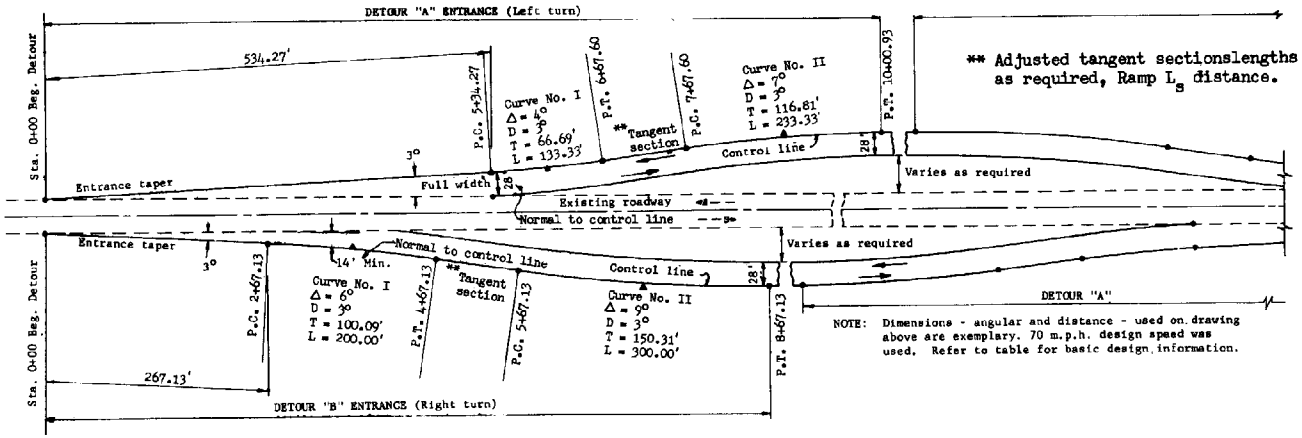

NOTE: Dimensions - angular and distance - used on drawing above are exemplary. 70 m.p.h. design speed was used. Refer to table for basic design information.

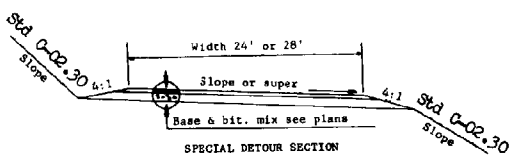

SPECIAL DETOUR SECTION

Tangent Roadway		Curved Roadway		
Entrance Design Speed	Entr. Taper Def'l. Angle	Exist. Horiz. Curve	Detour "A" Take off Curve	Detour "B" Take off Curve
70	3°	1°	2°	2°30'
60	3°	2°	3°	3°30'
50	4°	3°	4°	5°
40	6°	4°	5°	6°
30	10°	5°	6°	7°
		6°	7°	8°
		7°	8°	9°
		8°	9°	10°

Entrance Design Speed	Max. Horizontal Curvature			
	Curve No. I		Curve No. II*	
	D	Superelev.	D	Superelev.
70	3°	.09'/ft.	3°	.06'/ft.
60	3°	.08'/ft.	4°	.05'/ft.
50	4°	.07'/ft.	6°	.05'/ft.
40	6°	.07'/ft.	10°	.05'/ft.
30	10°	.07'/ft.	19°	.05'/ft.

*Curve No. II superelevations are for a design speed 20 mph less than entrance speed.

GENERAL NOTES

Detour "A" entrance shall be used where approaching vehicle must turn left. Detour "B" shall be used where approaching vehicle must turn right.

Detour from a horizontal curve: On the inside of the curve the detour take off shall be a curve, see table. On the outside a tangent take off shall be used. A vertical curve may be required to effect a smooth grade change.

The design speed shall be comparable between vertical and horizontal alignment.

The entrance design speed of a detour shall not be less than the normal postad speed of the existing roadway. The design speed for the remainder of the detour may be 20 m.p.h. less than the normal posted speed.

Any intermediate detour entrance may be designad on the basis of normal posted spead less 20 m.p.h. where visible construction activity has slowed traffic for the preceding 1/4 mile.

The minimum width of the detour shall be 28' for existing roadways 34' or wider and a minimum of 24' for existing roadways less than 34' in width.

The entrance taper for Detour "A" shall be extended until full detour width is attained. For Detour "B" the entrance taper shall be extended until a minimum of 14' is attained beyond the edge of existing roadway.

Any deviation from this standard must be approved by the Plans Engineer and Traffic Engineer and the Engineer shall submit the alignment and profile of the proposed change for their review.

Native material used in constructing the detour embankment will be considered suitable for backfill around pipe; however, it shall be reasonably free of rocks and debris

DESIGN APPROVED

APPROVED FOR DISTRIBUTION

STATE OF ARIZONA
DEPARTMENT OF TRANSPORTATION
DIVISION OF HIGHWAYS
STANDARD DRAWINGS

REV. 1/83

GEOMETRICS, DETOUR

DRAWING NO. C-6.20

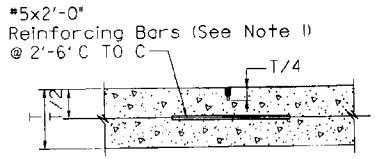

LONGITUDINAL WEAKENED PLANE JOINT
(LWP Joint)

TRANSVERSE WEAKENED PLANE JOINT
(TWP Joints-w/o load transfer dowel assemblies)

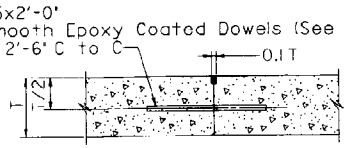

LONGITUDINAL CONSTRUCTION JOINT
(LC Joint)

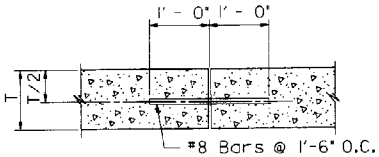

TRANSVERSE CONSTRUCTION JOINT
(TC Joint)

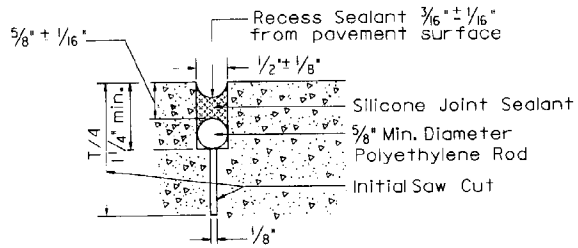

TRANSVERSE OR LONGITUDINAL WEAKENED PLANE JOINT DETAILS

Note: Where load transfer dowel assemblies are used on transverse joints the depth of initial saw cut shall be T/3.

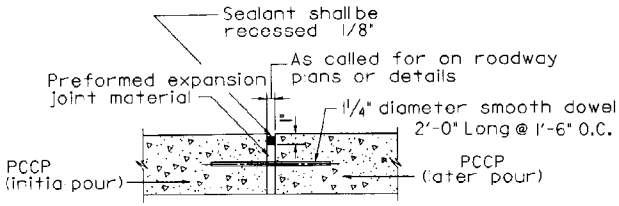

EXPANSION JOINT
(E Joint)

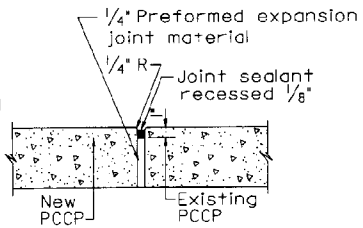

EXPANSION JOINT
(H Joint)

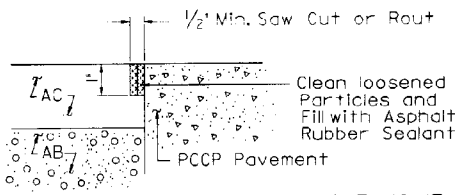

EDGE SEAL FOR AC/PCC PAVEMENT JOINT
(S Joint)

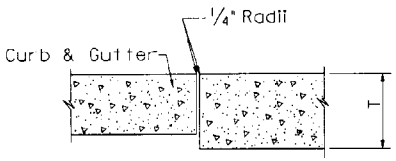

GUTTER JOINT
(G Joint)

JOINT ABBREVIATIONS

LWP	-	Longitudinal Weakened Plane Joint
TWP	-	Transverse Weakened Plane Joint
LC	-	Longitudinal Constr.
TC	-	Transverse Constr.
E,H	-	Expansion Joints
S	-	AC/PCCP Edge Seal
G	-	Gutter Joint
T	-	PCCP Thickness

GENERAL NOTES

1. For transverse weakened plane joint with load transfer dowel assemblies, see Std C-07.02, the #5 bars/dowels in the longitudinal joints shall be 20 inches long.
2. Initial saw cut not required for longitudinal joints.
3. In slip form type pavement construction, LWP Joints shall be used. In fixed form construction either LWP or LC Joints may be used.

DESIGN APPROVED George R. Hale	STATE OF ARIZONA DEPARTMENT OF TRANSPORTATION DIVISION OF HIGHWAYS STANDARD DRAWINGS	REV. 10/89
APPROVED FOR DISTRIBUTION	PCCP JOINT DETAILS	DRAWING NO. C-07.01

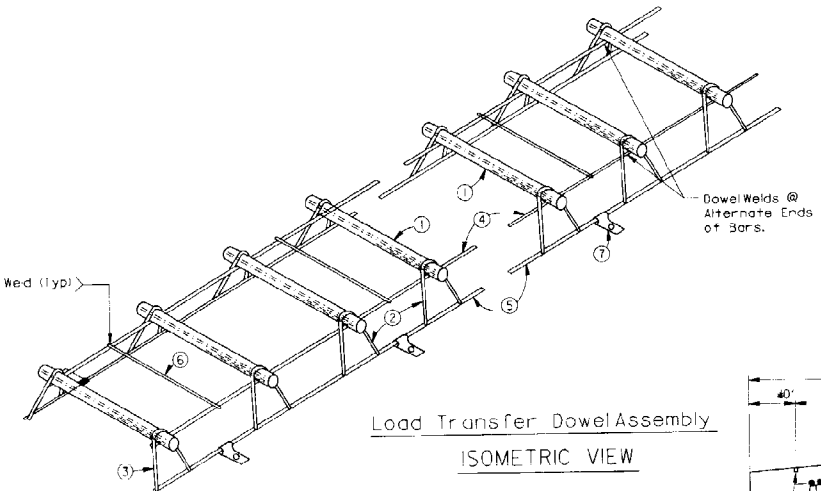

Load Transfer Dowel Assembly

ISOMETRIC VIEW

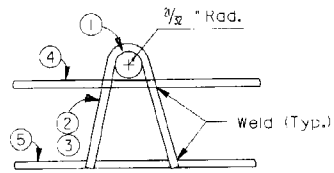

INTERMEDIATE LEG DETAIL

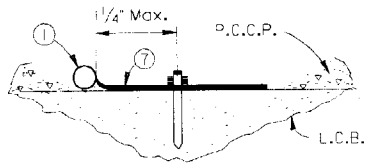

ANCHOR STRAP DETAIL

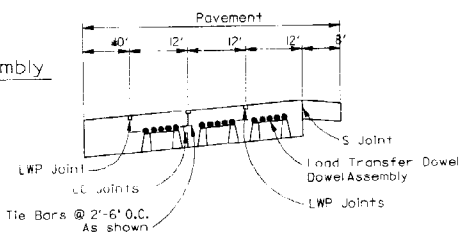

* 7'-6' @ where 2'-6' gutter is used.

Assembly Lane Placement

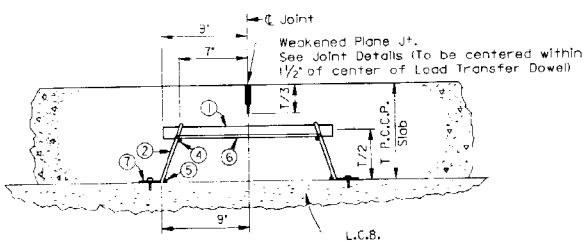

TRANSVERSE WEAKENED PLANE JOINT WITH LOAD TRANSFER DOWEL ASSEMBLY

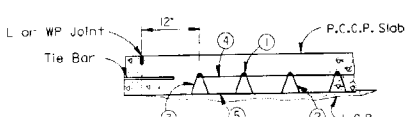

EDGE CLEARANCE DETAIL

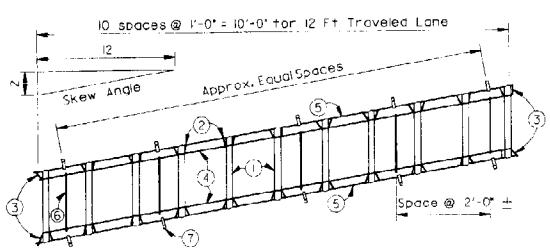

Load Transfer Dowel Assembly

PLAN VIEW

GENERAL NOTES:

Load Transfer Dowel Assembly shall be assembled from the following Materials.

For 12 ft. Traveled Lane:

1. Dowel Bars - 1 1/4" Ø X 1'-6" Plain Round Bars w/Coating. See Special Provisions
   11 Bars required each assembly.
2. Intermediate Legs - 2 Ga. or W-5.5 Wire, 18 required each assembly.
3. End Legs - 2 Ga. or W-5.5 Wire, 4 required each assembly.
4. Upper Space Bar - 2 Ga. or W-5.5 Wire X 10'-5 1/2' (skewed), 2 required each assembly.
5. Lower Space Bar - 2 Ga. or W-5.5 Wire X 10'-5 1/2' (skewed), 2 required each assembly.
6. Tie Bars - W-1.5 Wire X 16", 5 required each assembly.
7. Anchor Straps - 1" X 3" Steel Strap, .079 thick, Place with 1 1/2' steel nail, .145' Ø
   ASTM A227 Class w/ 1/4" head or washer to be power driven.
   10 required each assembly.

For 18 ft. Traveled Lane:

1. Dowel Bars - 1 1/4" Ø X 1'-6" Plain Round Bars w/Coating. See Special Provisions.
   17 Bars required each assembly.
2. Intermediate Legs - 2 Ga. or W-5.5 Wire, 30 required each assembly.
3. End Legs - 2 Ga. or W-5.5 Wire, 4 required each assembly.
4. Upper Space Bar - 2 Ga. or W-5.5 Wire X 16'-6 1/2 (skewed), 2 required each assembly.
5. Lower Space Bar - 2 Ga. or W-5.5 Wire X 16'-6 1/2 (skewed), 2 required each assembly.
6. Tie Bars - W 1.5 Wire X 16", 8 required each assembly.
7. Anchor Straps - 1" X 3" Steel Strap, .079 thick, Place with 1 1/2' steel nail, .145' Ø
   ASTM A227 Class 1 w/ 1/4" head or washer to be power driven.
   18 required each assembly.

For Transverse Joint spacing, see Plans.

Load Transfer Dowel Assemblies are to be placed at each Transverse Weakened Plane Joint on the Mainline Paving in the Traveled Lanes.

For additional information, see Stds. C-07.01 thru C-07.05.

DESIGN APPROVED George R. Hale	STATE OF ARIZONA DEPARTMENT OF TRANSPORTATION DIVISION OF HIGHWAYS STANDARD DRAWINGS	10/89
APPROVED FOR DISTRIBUTION	LOAD TRANSFER DOWEL DETAILS	DRAWING NO. C-07.02

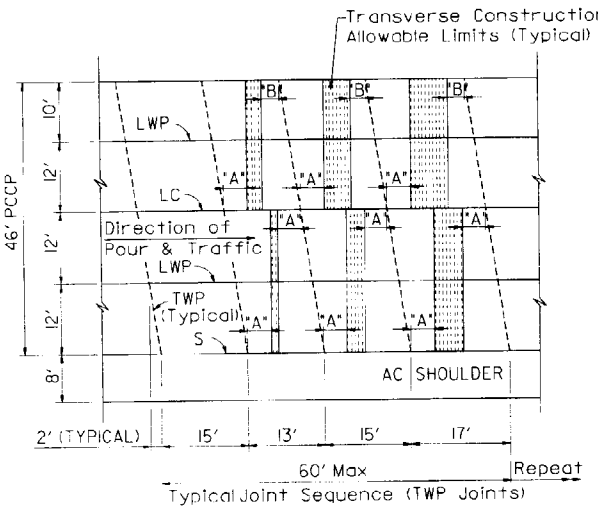

PLAN
46' PCCP

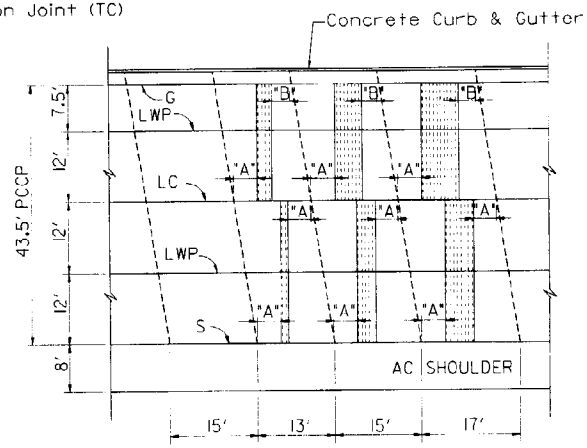

PLAN
43.5' PCCP

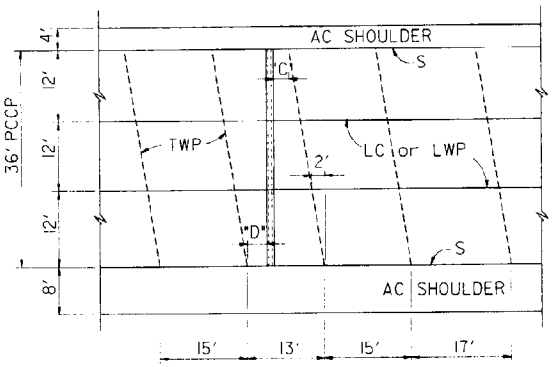

PLAN
36' PCCP

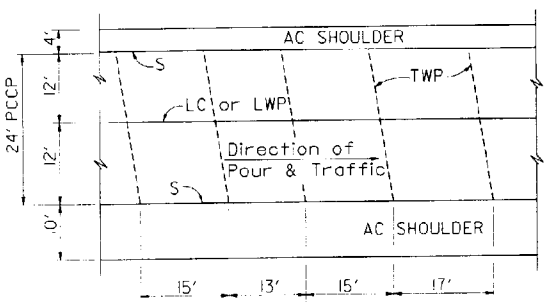

PLAN
24' PCCP

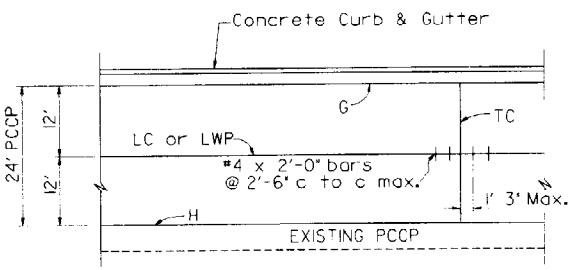

PLAN
24' PCCP (WIDENING)

GENERAL NOTES

1. Transverse construction joints shall be located within the allowable limits shown.
2. "A" shall equal 4' minimum (typical).
   "B" shall equal 3' minimum (typical).
   "C" shall equal 2' minimum (typical).
   "D" shall equal 4' minimum (typical).
3. For joint details and additional notes see Std. Dwg. No. C-07.01
4. All transverse joints shall be in line with joints in adjacent slabs.
5. At intersection of side roads or streets, joints shall be placed to give the intersection a symmetrical appearance while conforming to the cross section of the intersecting road or street.

DESIGN APPROVED George R. Hale	STATE OF ARIZONA DEPARTMENT OF TRANSPORTATION DIVISION OF HIGHWAYS STANDARD DRAWINGS	REV. 10/89
APPROVED FOR DISTRIBUTION	MAINLINE PCCP JOINTS	DRAWING NO. C-07.03

GENERAL NOTES

1. Dimensions with a tolerance may be adjusted to align to the nearest transverse Weakened Plane Construction Joint as directed.
2. For Joint Details see Drawing No. C-07.01
3. For Structural Sections see Construction Plans.
4. For Ramp Dimensions see Construction Plans.
5. For Cross-Sections see Drawing No. C-07.05

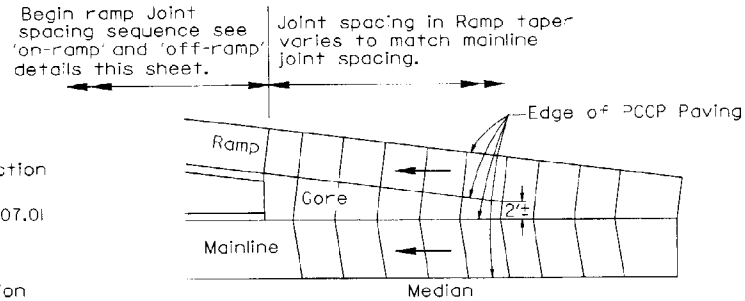

TYPICAL TRANSVERSE WEAKENED PLANE JOINT LAYOUT AT GORE AREAS

Note: Dimensions with a tolerance may be adjusted to align with the nearest transverse weakened plane or construction joint as directed.

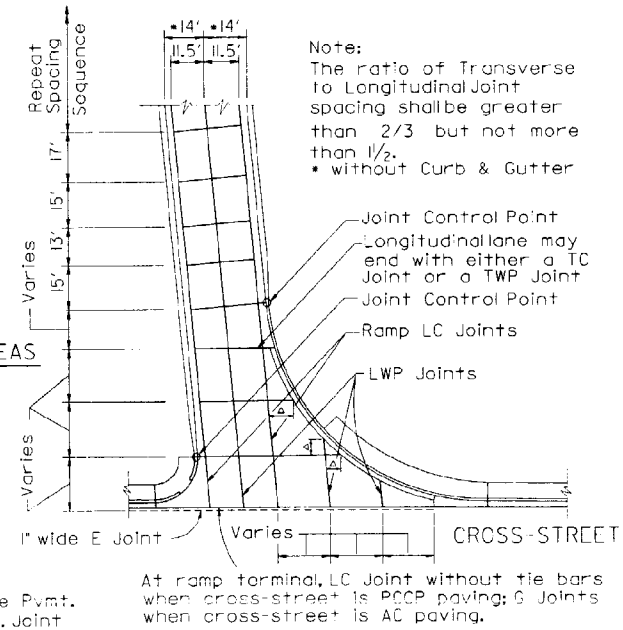

Note:
The ratio of Transverse to Longitudinal Joint spacing shall be greater than 2/3 but not more than 1½.
* without Curb & Gutter

At ramp terminal, LC Joint without tie bars when cross-street is PCCP paving; G Joints when cross-street is AC paving.

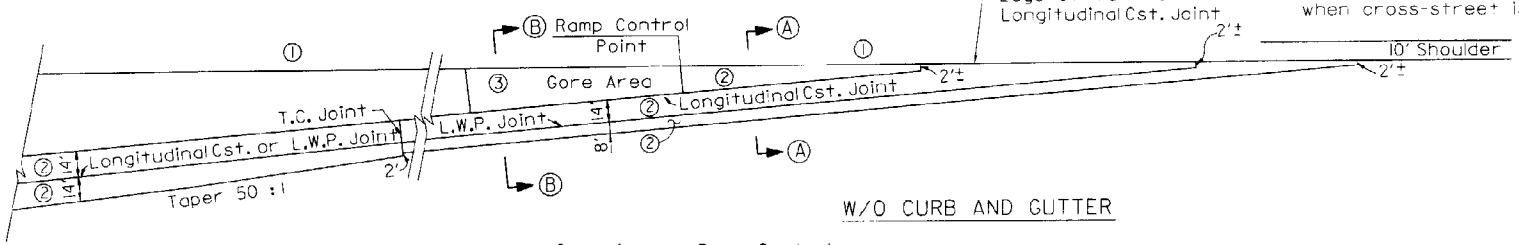

W/O CURB AND GUTTER

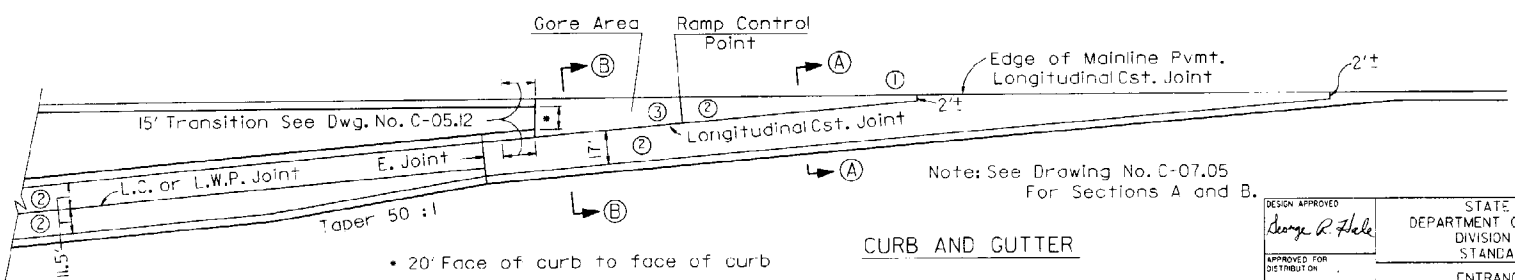

Note: See Drawing No. C-07.05 For Sections A and B.

* 20' Face of curb to face of curb

CURB AND GUTTER

DESIGN APPROVED George R. Hecle	STATE OF ARIZONA DEPARTMENT OF TRANSPORTATION DIVISION OF HIGHWAYS STANDARD DRAWINGS	10/89
APPROVED FOR DISTRIBUTION	ENTRANCE RAMP PCCP JOINTS	DRAWING NO. C-07.04

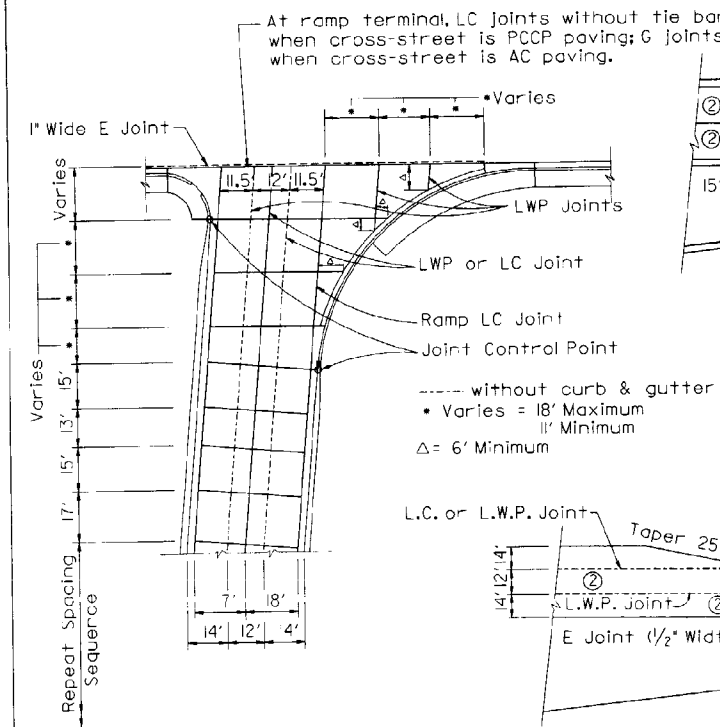

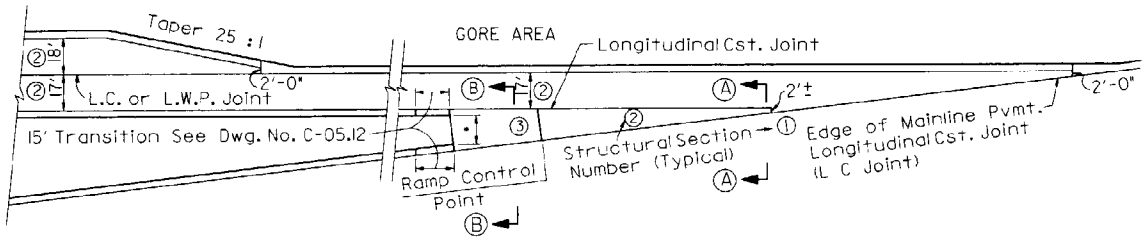

* 20' Face of curb to face of curb

CURB AND GUTTER

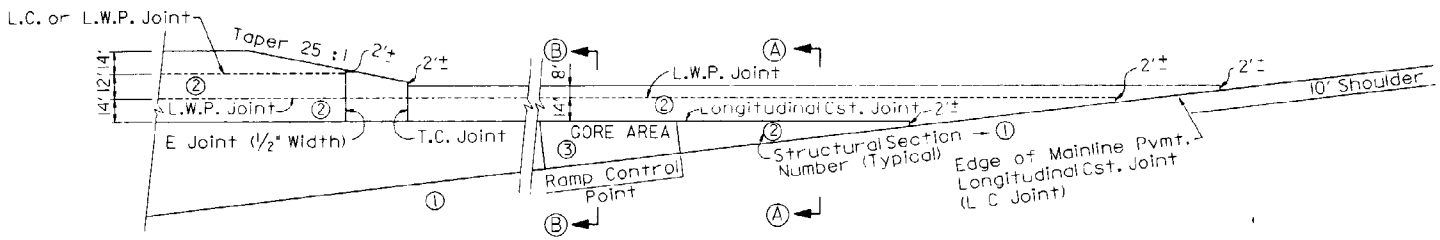

W/O CURB AND GUTTER

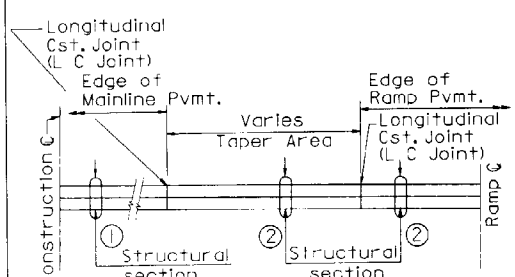

SECTION A-A
RAMP TAPER

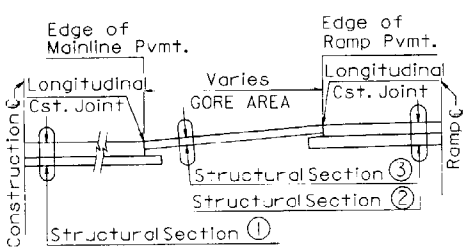

SECTION B-B
GORE AREA

Note: See Drawing No. C-07.04 For General Notes and Transverse Joint Layout at Gore Areas

DESIGN APPROVED George R. Hale APPROVED FOR DISTRIBUTION	STATE OF ARIZONA DEPARTMENT OF TRANSPORTATION DIVISION OF HIGHWAYS STANDARD DRAWINGS	10/89
	EXIT RAMP PCCP JOINTS	DRAWING NO. C-07.05

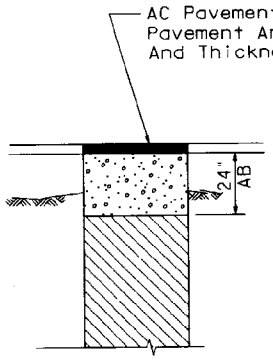

TYPE A

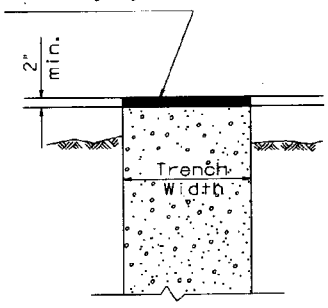

TYPE B

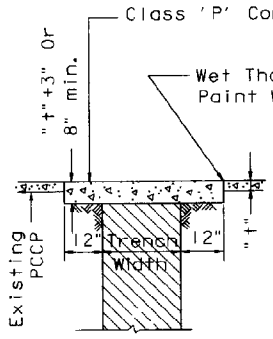

TYPE C

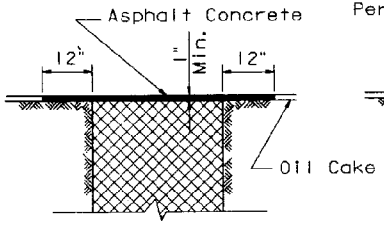

TYPE D

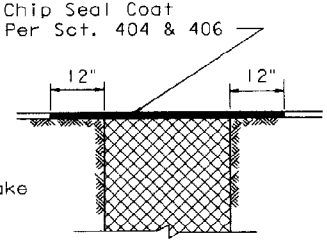

TYPE E

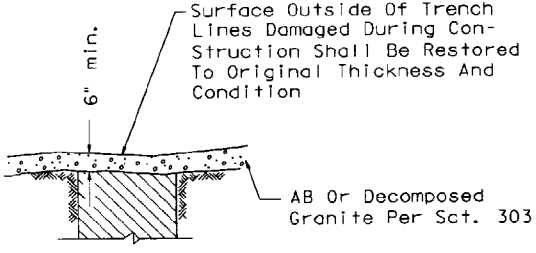

TYPE F

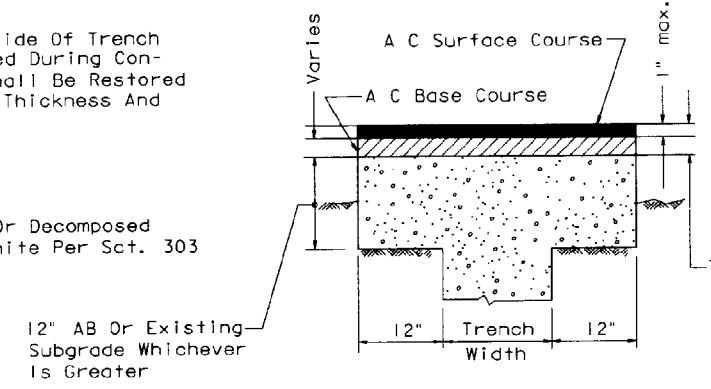

TYPE G

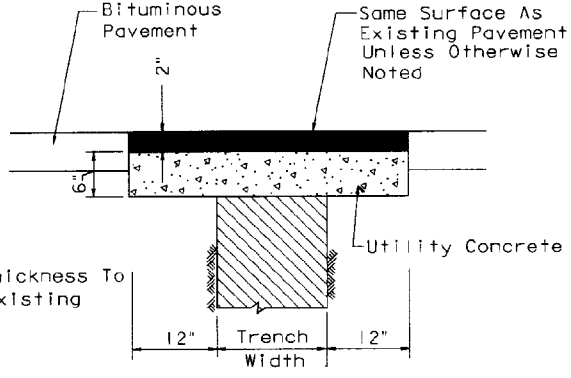

TYPE H

GENERAL NOTES

1. Bedding per Section 501.
2. Asphalt concrete shall be in accordance with the requirements of the Standard Specifications.
3. 12" lip is required on the sides of trenches that are not parallel to the center line of the street.
4. Types D & E require 9" of AB at top of trench when there is an existing base.
5. See Standard Drawing C-13.15 for typical pipe installation.

LEGEND

- Compacted Backfill Density Per Section 501
- AB, Granular Backfill Or Native Backfill Per Section 303-2 And 501
- AB Per Section 303-2 And 501

DESIGN APPROVED *George R. Hale*	STATE OF ARIZONA DEPARTMENT OF TRANSPORTATION DIVISION OF HIGHWAYS STANDARD DRAWINGS	REV. 10/89
APPROVED FOR DISTRIBUTION	TRENCH BACKFILL AND PAVEMENT REPLACEMENT	DRAWING NO. C-07.06

NO.	DESCRIPTION C
1	
2	
3	
4	
5	

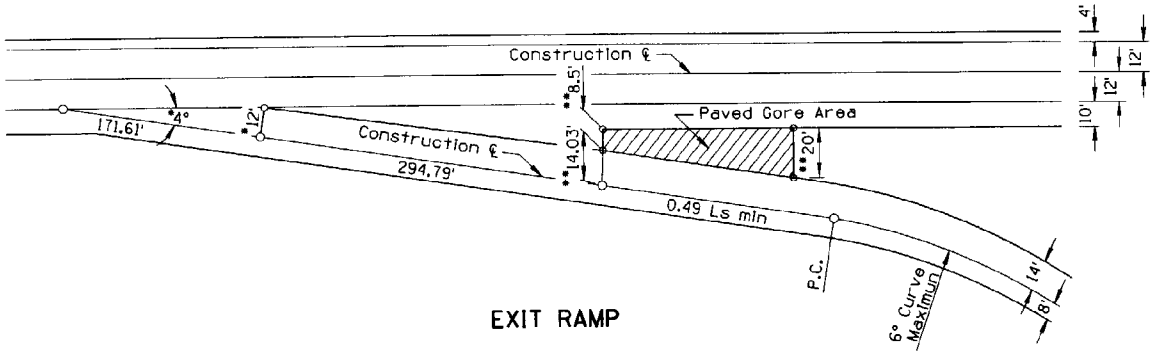

EXIT RAMP

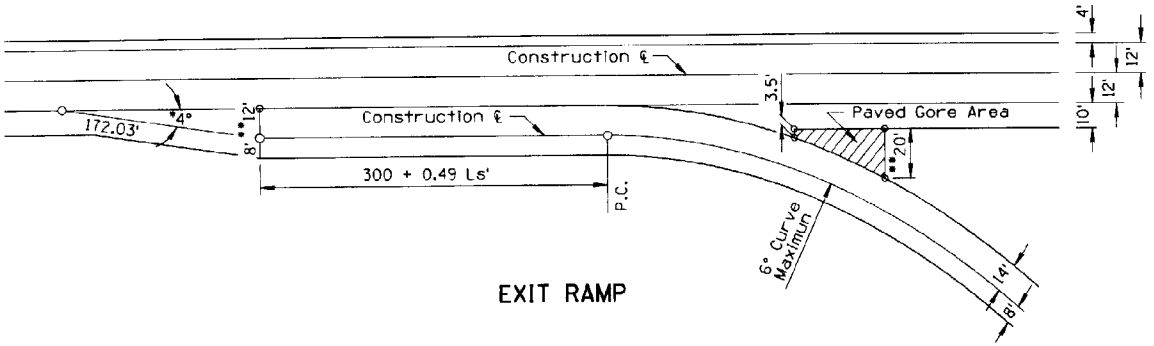

EXIT RAMP

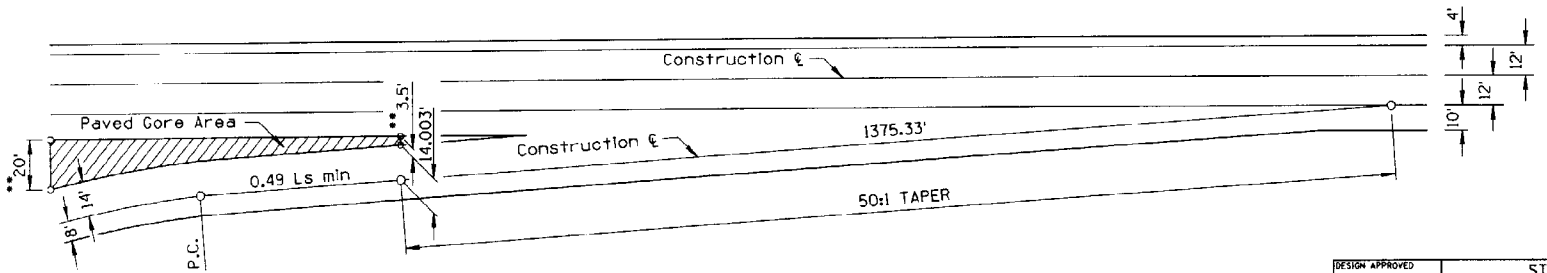

ENTRANCE RAMP

GENERAL NOTES

1. For paved gore area details, see Std. C-08.20.
2. Parallel deceleration is to be used only under special conditions necessitating ramp curvature ahead of nose.
3. The 50:1 taper and corresponding offsets shall also apply when the main roadway has curvature or combined tangent and curvature.

* Normal to ramp.

** Distance normal to main roadway construction ℄.

DESIGN APPROVED	STATE OF ARIZONA DEPARTMENT OF TRANSPORTATION DIVISION OF HIGHWAYS STANDARD DRAWINGS	REV. 8-89
APPROVED FOR DISTRIBUTION	RAMP GEOMETRICS	DRAWING NO. C-08.10

NO.	DESCRIPTION

GENERAL NOTES

1. Paved gore area shall be Class S Concrete, f'_c = 4000 psi or Asphaltic Concrete as called for on plans.
2. Use ¼" Joint and Preformed Joint Filler in any portion of the periphery abutting PCC Pavement.

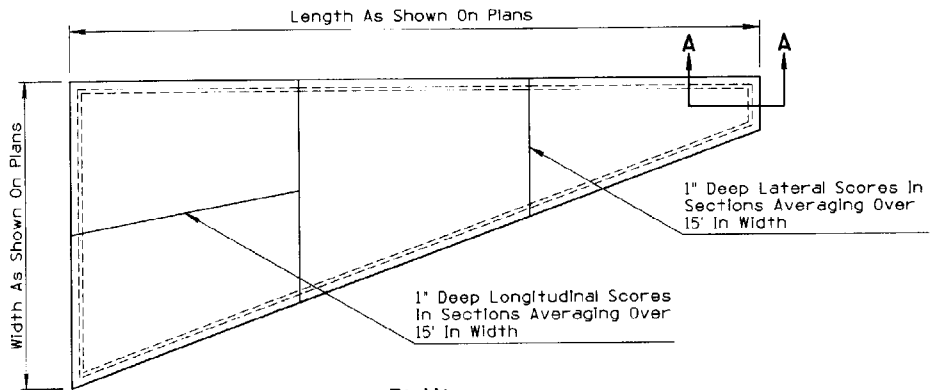

PLAN
CONCRETE GORE AREA

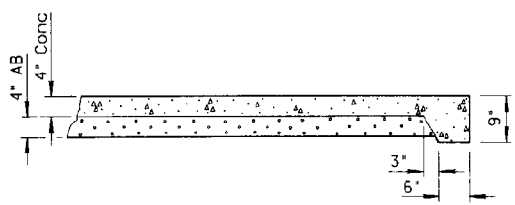

SECTION A-A

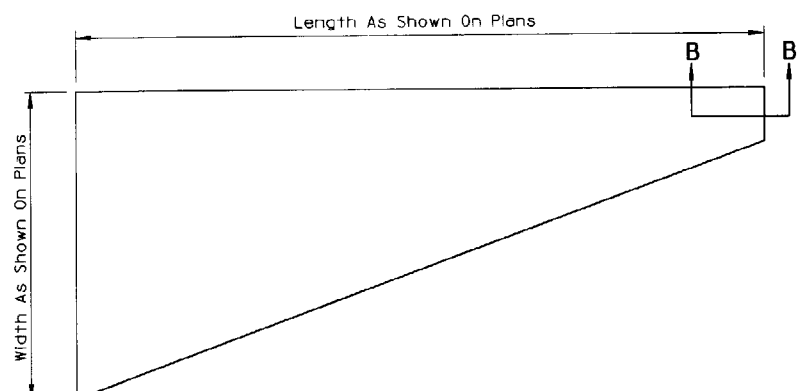

PLAN
ASPHALTIC CONCRETE GORE AREA

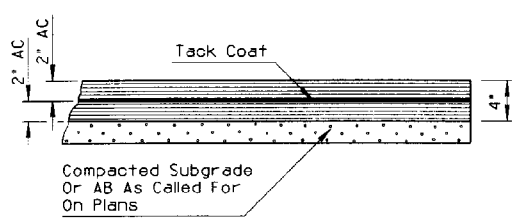

SECTION B-B

DESIGN APPROVED	STATE OF ARIZONA DEPARTMENT OF TRANSPORTATION DIVISION OF HIGHWAYS STANDARD DRAWINGS	REV.
George R. Hale		8-89
APPROVED FOR DISTRIBUTION	PAVED GORE AREA	DRAWING NO. C-08.20

NO.	DESCRIPTION ◊
1	OFFSET DISTANCE CHANGED
2	MINIMUM ROADWAY WIDTH CHANGED
3	GROOVING LIMITS CHANGED
4	
5	

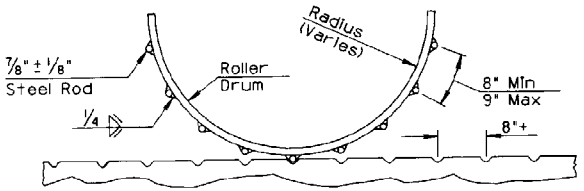

STEEL DRUM DETAIL

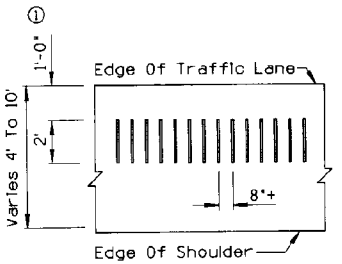

SHOULDERS 4' TO 10' WIDE

SHOULDER GROOVING DETAIL

GENERAL NOTES

② 1. Shoulder Grooving shall be applied on left and right shoulders of rural roadways (Interstate, primary divided, and undivided) 34' and wider as called for on plans.

2. Shoulder Grooving shall be omitted across prinicipal intersecting roadways or other interruptions in normal shoulder width as directed by the Engineer.

3. Shoulder Grooving shall be constructed by making indentations in the asphaltic concrete.

   The indentations may be formed by rolling the hot asphalt concrete using 7/8"± 1/8" steel rods welded to the drum. The rod segments shall be 2' long and be fully welded to the roller drum at approximately 8" centers.

4. Each roller shall be equipped with an acceptable guide that extends in front of the roller and is clearly visible to the operator in order that proper alignment of the completed scored shoulder is obtained.

5. The contractor may utilize other equipment or methods to construct the shoulder grooving if approved by the Engineer.

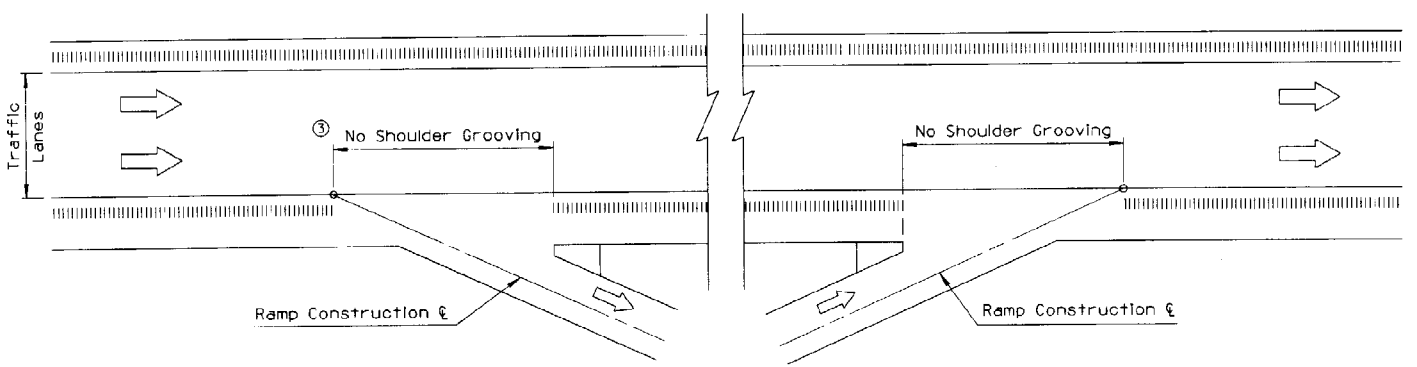

PLAN

DESIGN APPROVED George R. Hale	STATE OF ARIZONA DEPARTMENT OF TRANSPORTATION DIVISION OF HIGHWAYS STANDARD DRAWINGS	REV. 10-89
APPROVED FOR DISTRIBUTION	GROOVING FOR BITUMINOUS SHOULDERS	DRAWING NO. C-09.10

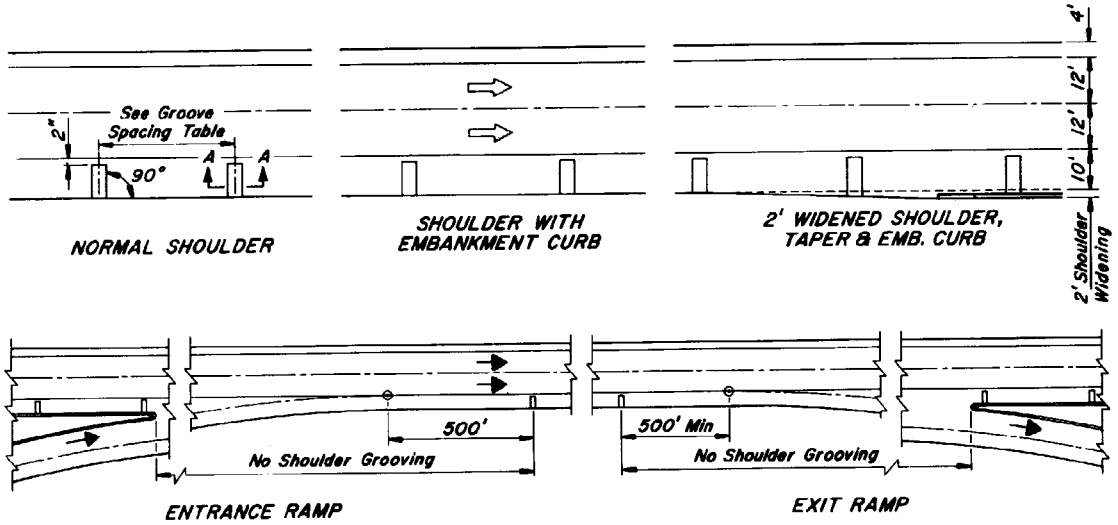

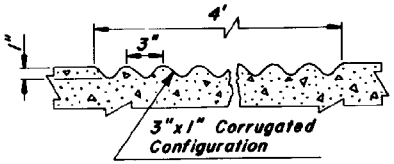

SECTION A-A

GROOVE SPACING	
Design Speed Per Plans M.P.H.	Spacing Ft.
80	60
70	50
60	45
55	40
50	35
40	30

GENERAL NOTES

1. Grooves in curbed shoulders shall terminate at the face of the single curb or at the edge of the gutter.

2. Grooves shall extend through pavement edge of shoulders with no curb.

DESIGN APPROVED	STATE OF ARIZONA DEPARTMENT OF TRANSPORTATION DIVISION OF HIGHWAYS STANDARD DRAWINGS	REV. 1/83
APPROVED FOR DISTRIBUTION	GROOVING FOR CONCRETE SHOULDERS	DRAWING NO. C-9.20

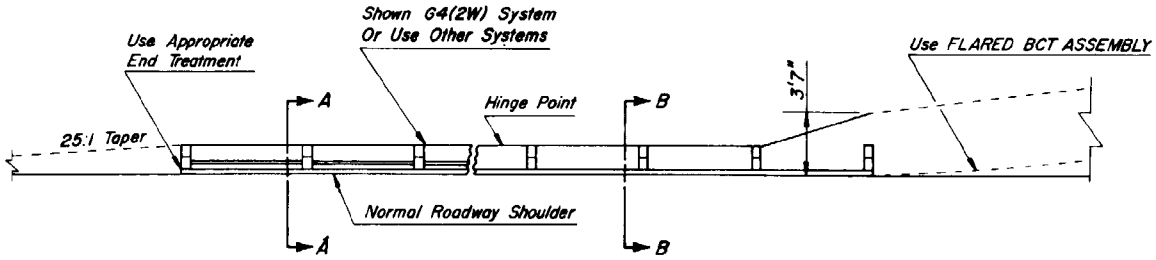

PLAN

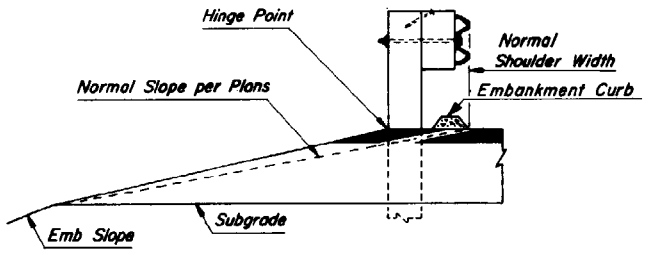

With Embankment Curb

SECTION A-A

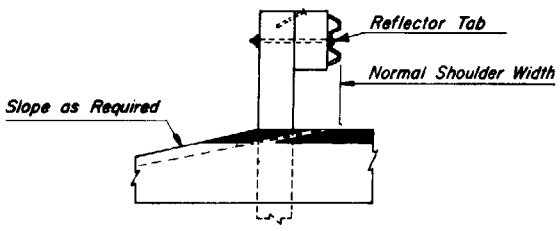

Without Embankment Curb

SECTION B-B

TYPE A GUARD RAIL INSTALLATION

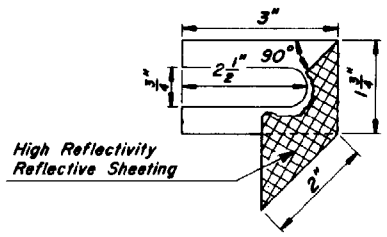

REFLECTOR TAB DETAIL

GENERAL NOTES

All embankment curb shall be protected by guard rail.

Guard rail, exclusive of flares, shall not begin or end within embankment curb.

DESIGN APPROVED	STATE OF ARIZONA DEPARTMENT OF TRANSPORTATION DIVISION OF HIGHWAYS STANDARD DRAWINGS	REV 1/83
APPROVED FOR DISTRIBUTION	TYPE A GUARD RAIL INSTALLATION, REFLECTOR TAB.	DRAWING No. C-10.01

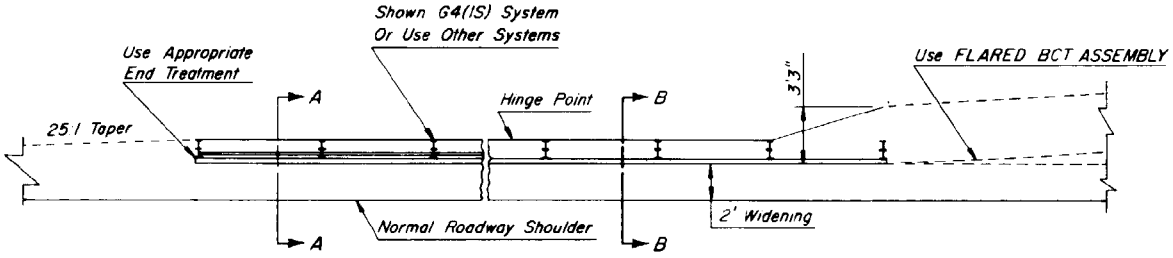

PLAN

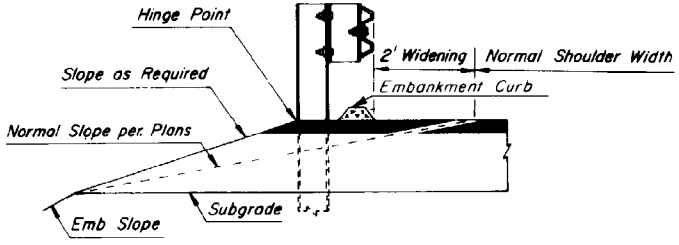

With Embankment Curb

SECTION A-A

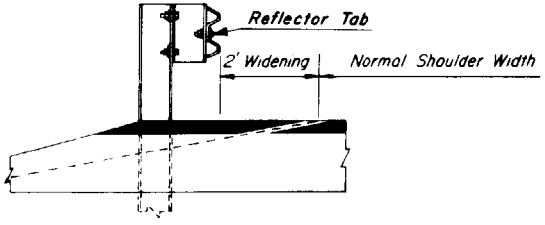

Without Embankment Curb

SECTION B-B

TYPE B GUARD RAIL INSTALLATION

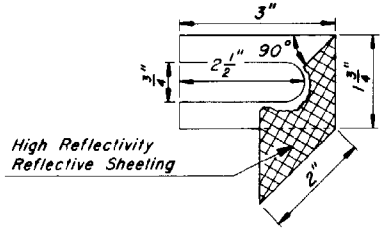

REFLECTOR TAB DETAIL

GENERAL NOTES

All embankment curb shall be protected by guard rail.

Guard rail, exclusive of flares, shall not begin or end within embankment curb.

DESIGN APPROVED	STATE OF ARIZONA DEPARTMENT OF TRANSPORTATION DIVISION OF HIGHWAYS STANDARD DRAWINGS	REV. 1/83
APPROVED FOR DISTRIBUTION	TYPE B GUARD RAIL INSTALLATION, REFLECTOR TAB	DRAWING No. C-10.02

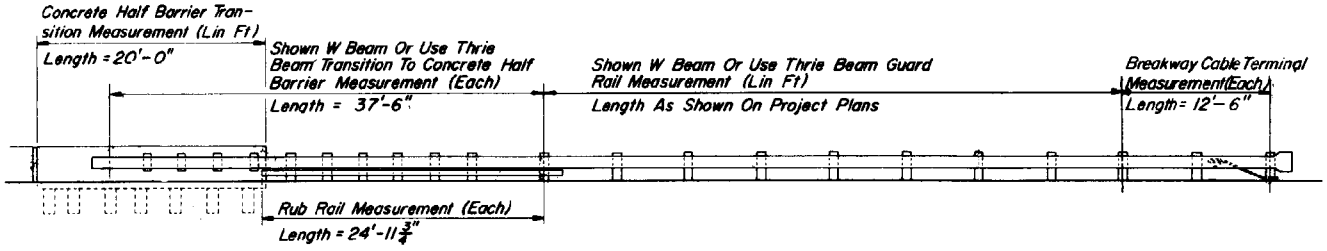

GENERAL NOTES

Length shall be as shown unless otherwise indicated on the project plans.

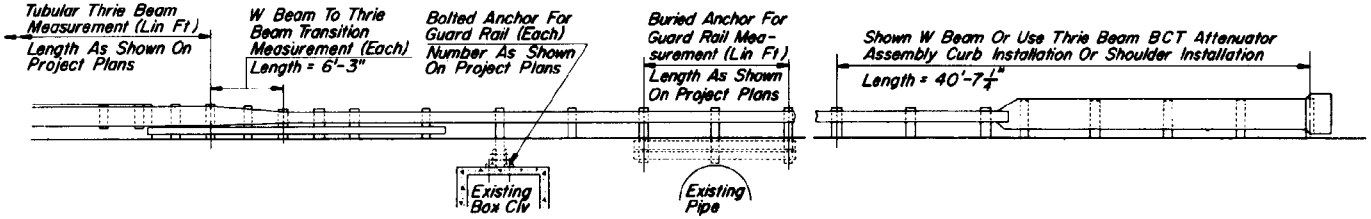

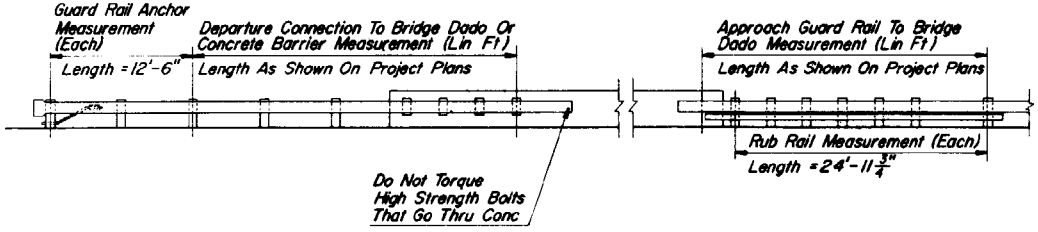

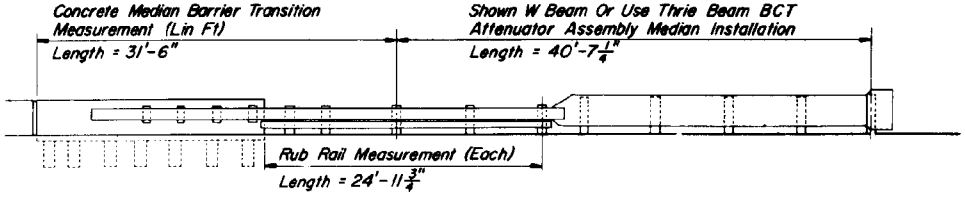

DESIGN APPROVED	STATE OF ARIZONA DEPARTMENT OF TRANSPORTATION DIVISION OF HIGHWAYS STANDARD DRAWINGS	REV. 7/85
APPROVED FOR DISTRIBUTION	MEASUREMENT LIMITS FOR W BEAM AND THRIE BEAM SYSTEM	DRAWING NO. C-10.03

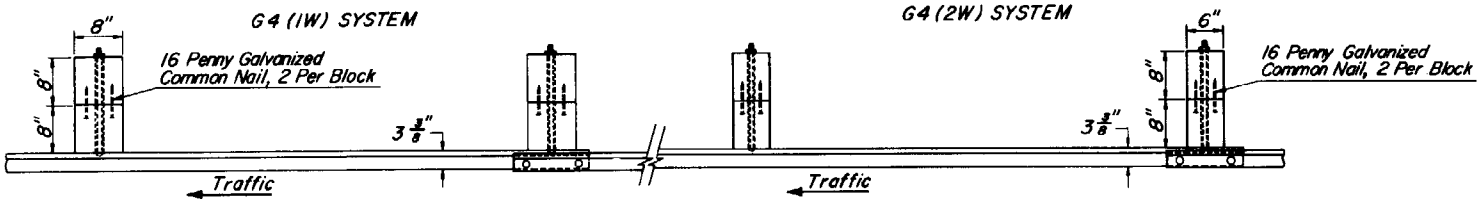

PLAN

GENERAL NOTES

● - Indicates ARTBA designation.

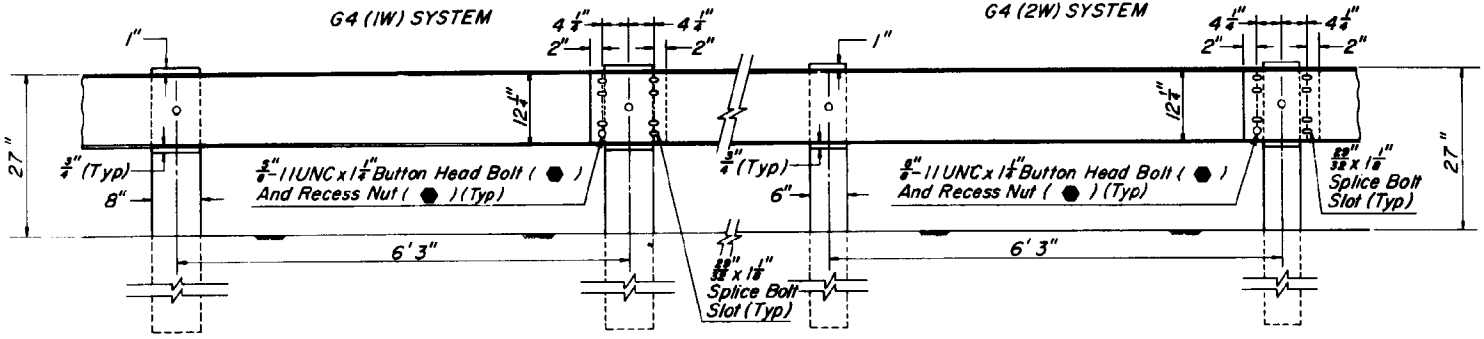

ELEVATION

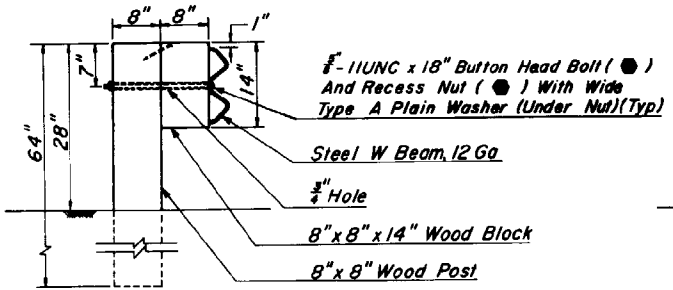

SECTION G4(1W)

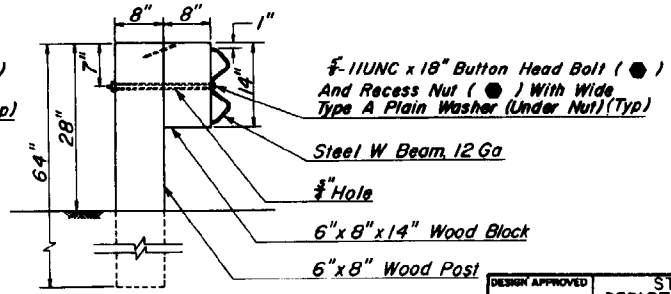

SECTION G4(2W)

DESIGN APPROVED	STATE OF ARIZONA DEPARTMENT OF TRANSPORTATION DIVISION OF HIGHWAYS STANDARD DRAWINGS	REV 7/85
APPROVED FOR DISTRIBUTION	G4(1W) AND G4(2W) BLOCKED OUT W BEAM (TIMBER POST)	DRAWING No. C-10.04

GENERAL NOTES

●—Indicates ARTBA designation.

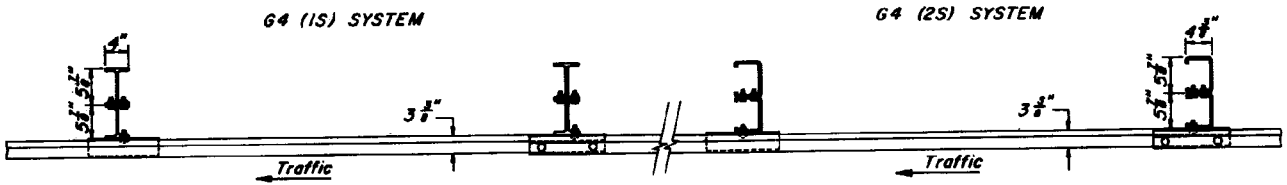

PLAN

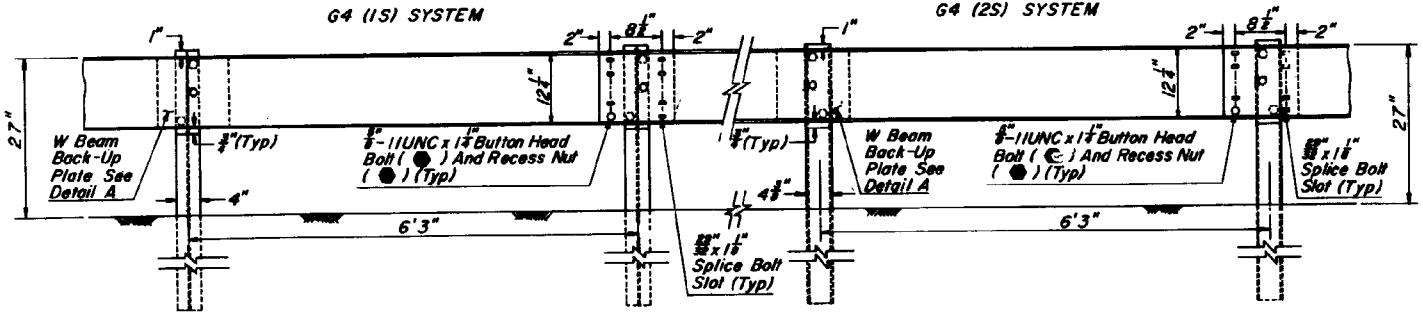

ELEVATION

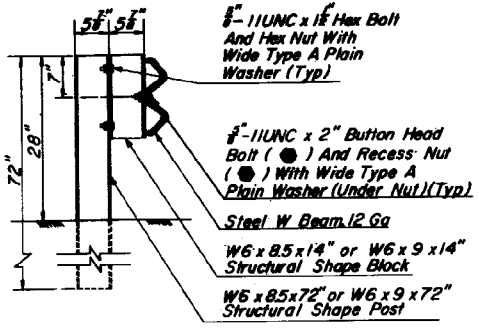

SECTION G4(1S) WITHOUT CURB

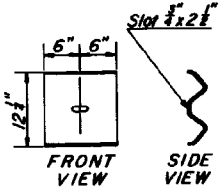

DETAIL A (W BEAM BACK-UP PLATE)

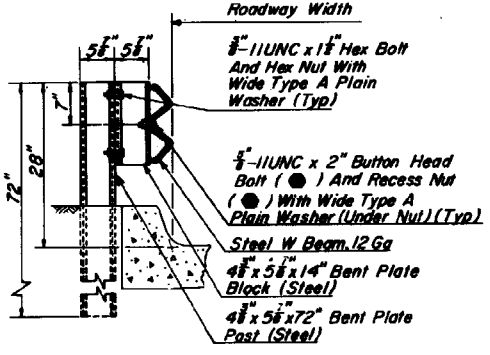

SECTION G4(2S) WITH CURB

DESIGN APPROVED	STATE OF ARIZONA DEPARTMENT OF TRANSPORTATION DIVISION OF HIGHWAYS STANDARD DRAWINGS	REV. 7/85
ENGINEER FOR DISTRIBUTION	G4 (1S) AND G4 (2S) BLOCKED OUT W BEAM (STEEL POST)	DRAWING No. C-10.05

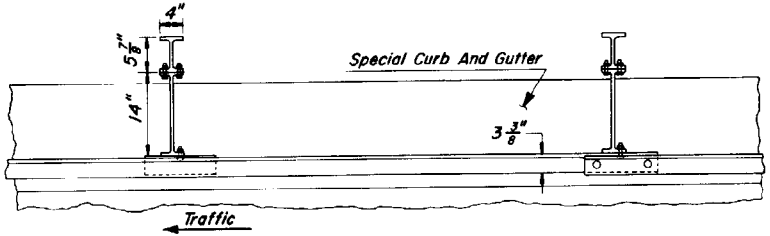

PLAN

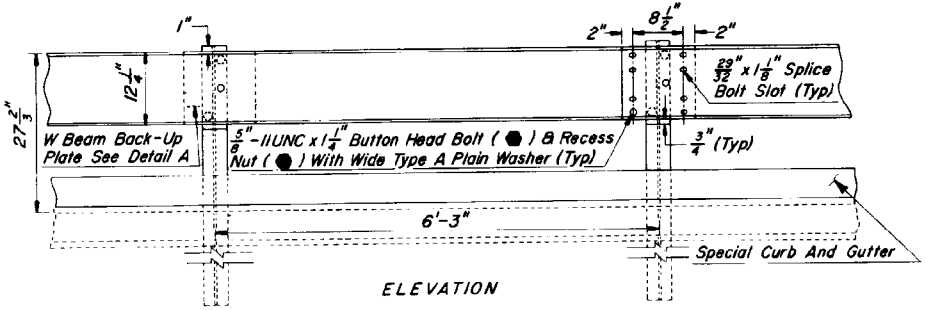

ELEVATION

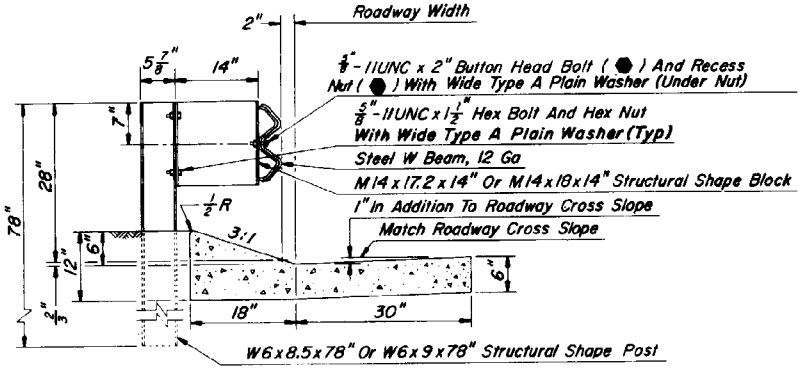

SECTION

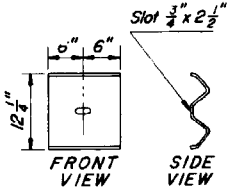

DETAIL A
(W BEAM BACK-UP PLATE)

GENERAL NOTES

⬢ - Indicates ARTBA designation.

DESIGN APPROVED	STATE OF ARIZONA DEPARTMENT OF TRANSPORTATION DIVISION OF HIGHWAYS STANDARD DRAWINGS	REV. 7/85
APPROVED FOR DISTRIBUTION	G4(IS-MODIFIED) BLOCKED OUT W BEAM (STEEL POST) WITH SPECIAL CURB AND GUTTER	DRAWING NO. C-10.06

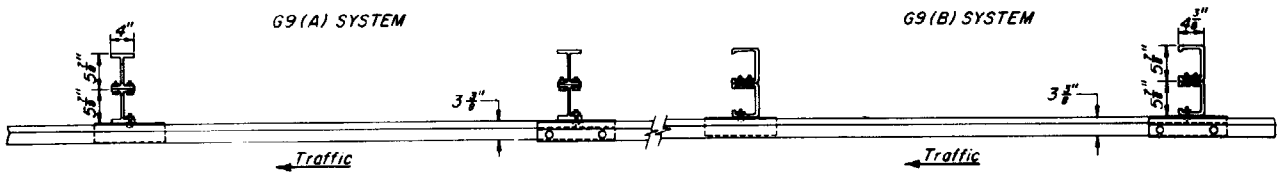

PLAN

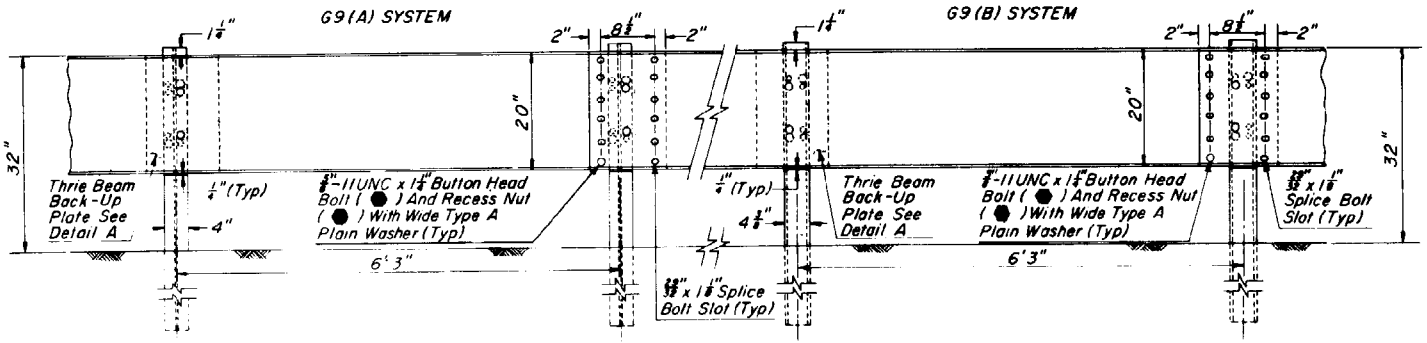

ELEVATION

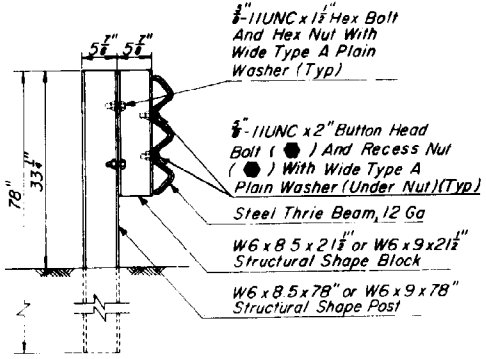

SECTION G9(A)

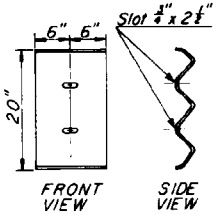

DETAIL A
(THRIE BEAM BACK-UP PLATE)

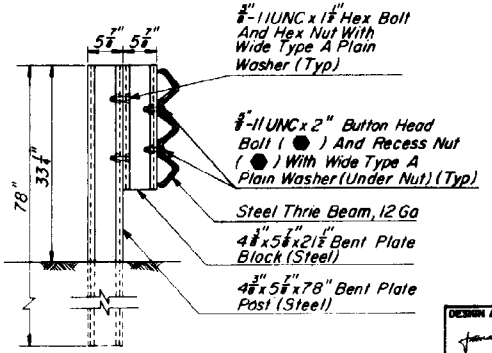

SECTION G9(B)

GENERAL NOTES

● –Indicates ARTBA designation.

DESIGN APPROVED	STATE OF ARIZONA DEPARTMENT OF TRANSPORTATION DIVISION OF HIGHWAYS STANDARD DRAWINGS	REV. 7/85
APPROVED FOR DISTRIBUTION	G9(A) AND G9(B) BLOCKED OUT THRIE BEAM (STEEL POST)	DRAWING No. C-10.07

G9(C) SYSTEM

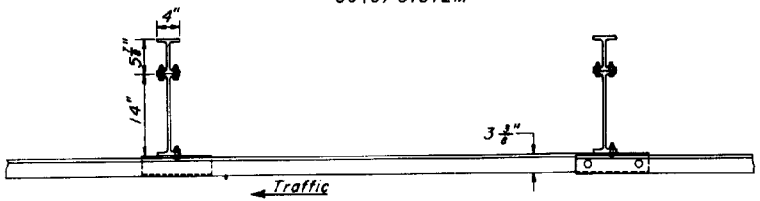

PLAN

G9(C) SYSTEM

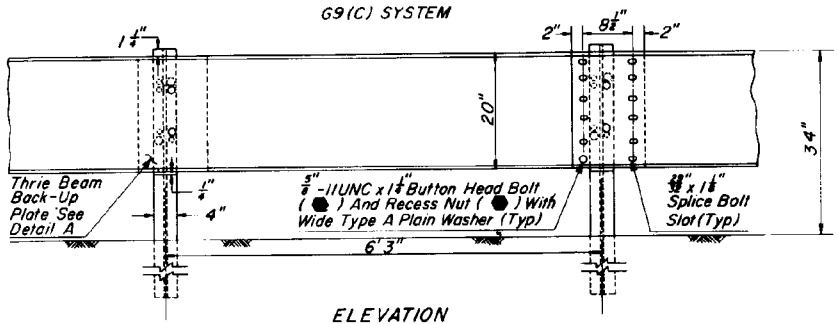

ELEVATION

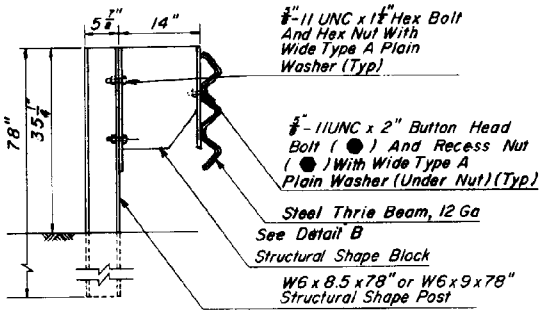

SECTION G9(C)

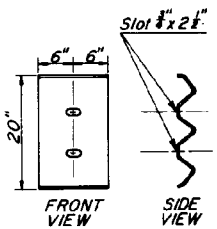

DETAIL A
(THRIE BEAM BACK-UP PLATE)

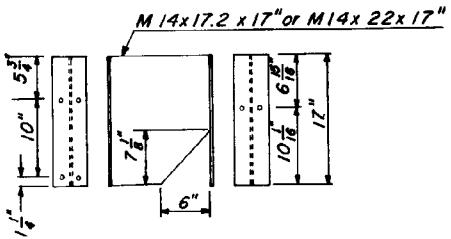

DETAIL B
(MODIFIED STRUCTURAL SHAPE BLOCK)

GENERAL NOTES

●-Indicates ARTBA designation.

DESIGN APPROVED	STATE OF ARIZONA DEPARTMENT OF TRANSPORTATION DIVISION OF HIGHWAYS STANDARD DRAWINGS	REV 7/85
APPROVED FOR DISTRIBUTION	G9(C) BLOCKED OUT THRIE BEAM (STEEL POST)	DRAWING No. C-10.08

NO.	DESCRIPTION OF	DATE
1.	REVISED TO CONTINUOUSLY REINFORCED BARRIER	10/89

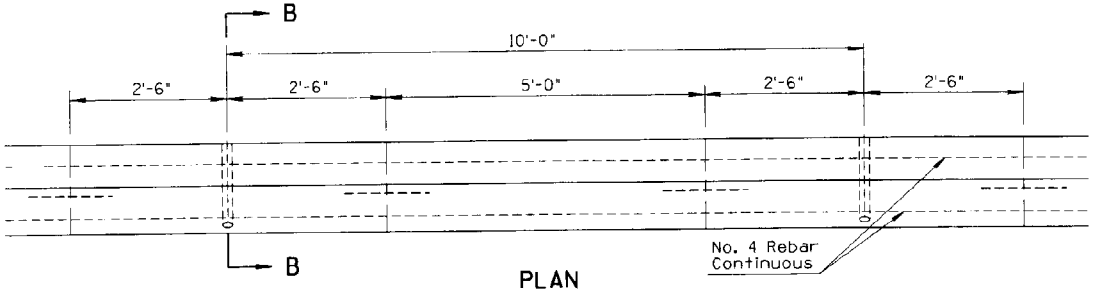

PLAN

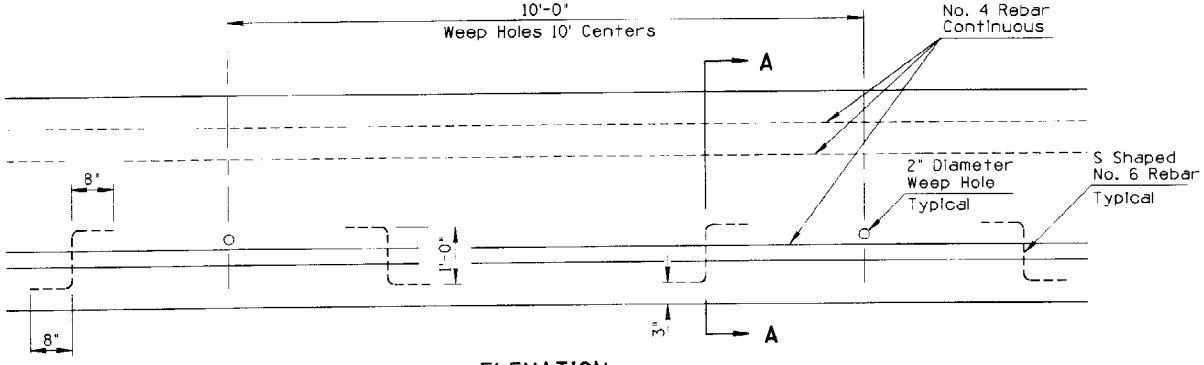

ELEVATION

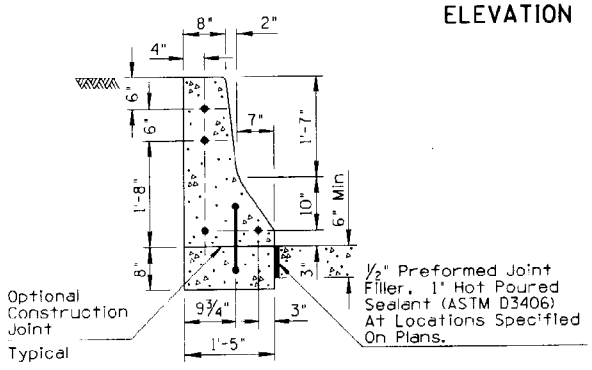

SECTION A-A

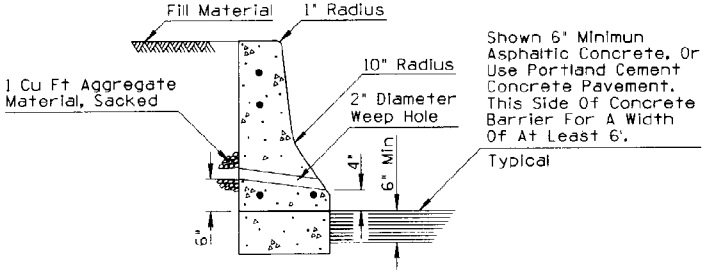

SECTION B-B

GENERAL NOTES

1. Half Barrier shall be constructed by the slip form or formed Cast-in-Place method.
2. When obstacles are encountered which prevent the use of slip form equipment, the closure shall be accomplished by the use of stationary forms.
3. Concrete shall be Class S, design strength f'_c = 3000 psi .
4. If the footing and barrier are cast monolithically No. 6 "S" shaped rebars will not be required.
5. In no case shall the front lip of barrier exceed the footing width.
6. No. 4 Rebar shall extend 12" past the construction joint at the completion of the days pour.

DESIGN APPROVED	STATE OF ARIZONA DEPARTMENT OF TRANSPORTATION DIVISION OF HIGHWAYS STANDARD DRAWINGS	REV.
George R. Hale		10-89
APPROVED FOR DISTRIBUTION	HALF BARRIER, CAST IN PLACE, SLIP FORM	DRAWING NO. C-10.09

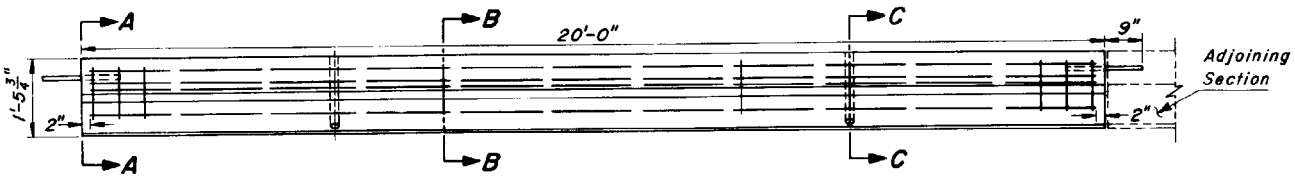

PLAN

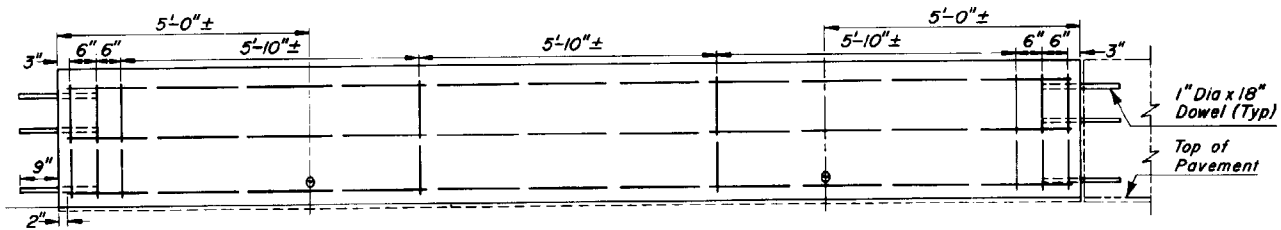

ELEVATION

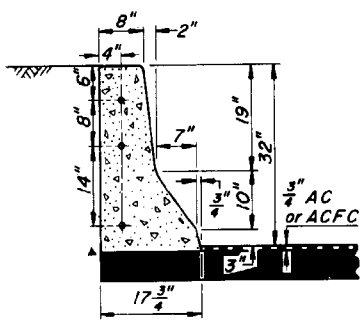

SECTION A-A

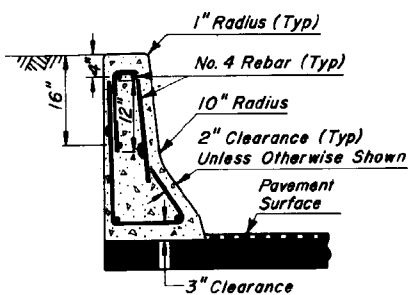

SECTION B-B

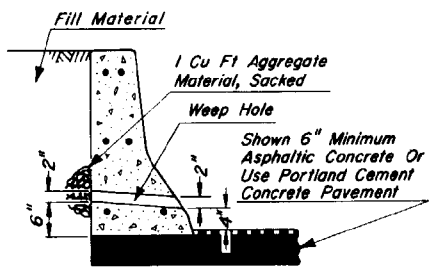

SECTION C-C

DESIGN APPROVED	STATE OF ARIZONA DEPARTMENT OF TRANSPORTATION DIVISION OF HIGHWAYS STANDARD DRAWINGS	REV. 11/83
APPROVED FOR DISTRIBUTION	HALF BARRIER, CAST IN PLACE, FIXED FORM	DRAWING NO. C-10.10

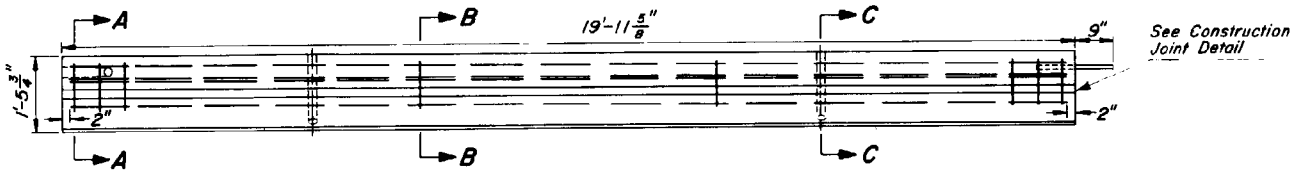

PLAN

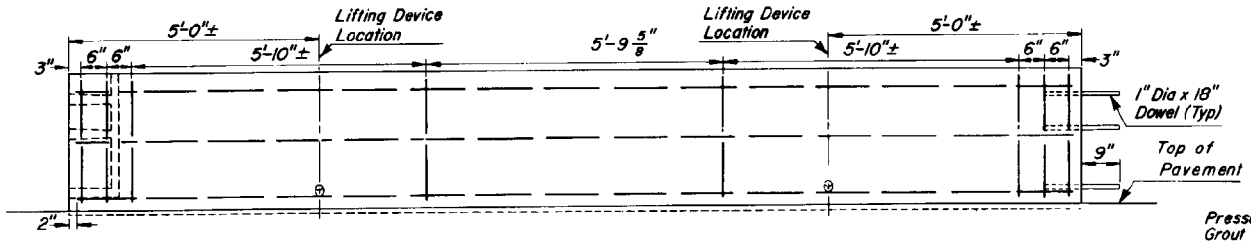

ELEVATION

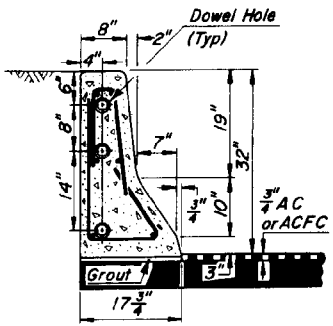

SECTION A-A

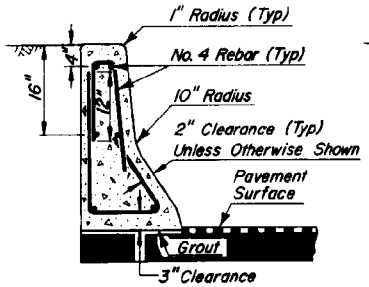

SECTION B-B

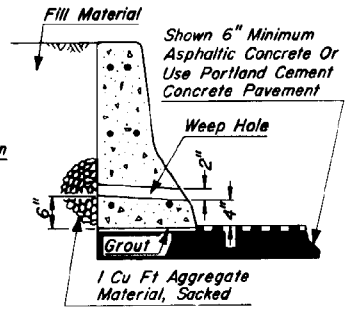

SECTION C-C

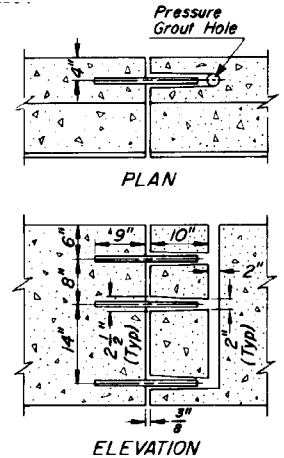

CONSTRUCTION JOINT DETAIL

DESIGN APPROVED	STATE OF ARIZONA DEPARTMENT OF TRANSPORTATION DIVISION OF HIGHWAYS STANDARD DRAWINGS	REV. 1/83
APPROVED FOR DISTRIBUTION	HALF BARRIER, PRECAST	DRAWING NO. C-10.11

NO.	DESCRIPTION	DATE
1.	REVISED TO CONTINUOUSLY REINFORCED BARRIER	10/89

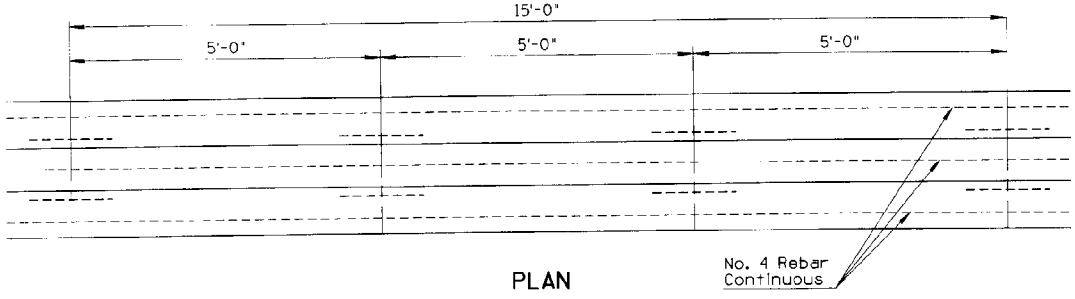

PLAN

TYPE 1 SHOWN

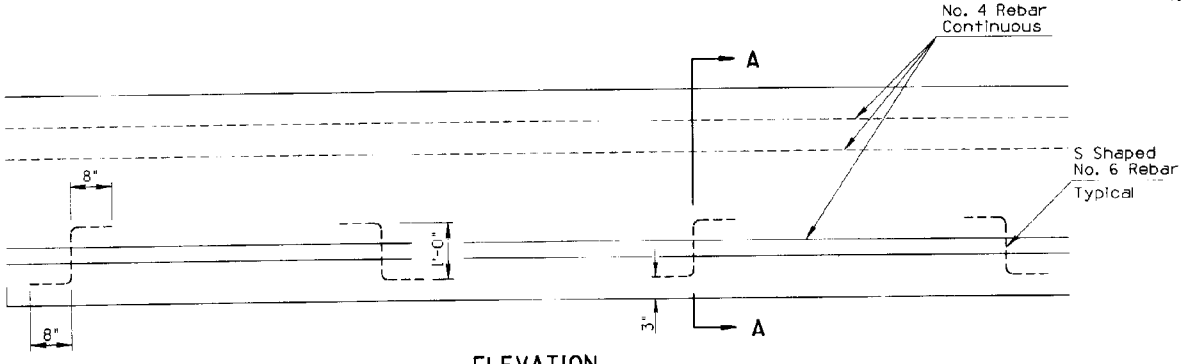

ELEVATION

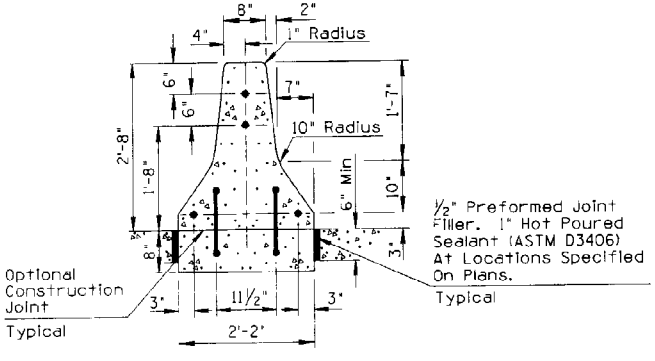

TYPE 1

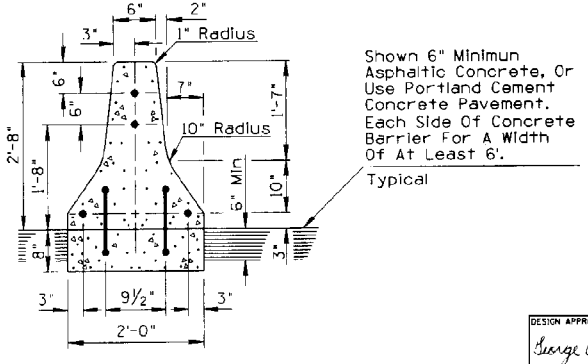

TYPE 2

SECTION A-A

GENERAL NOTES

1. Median Barrier shall be constructed by the slip form or formed Cast-In-Place method.
2. When obstacles are encountered which prevent the use of slip form equipment, the closure shall be accomplished by the use of stationary forms.
3. Unless otherwise specified on project plans, the Type 1 Median Barrier shall be constructed.
4. Concrete shall be Class S, design strength f'_c = 3000 psi.
5. If the footing and barrier are cast monolithically, No. 6 S shaped rebars will not be required.
6. In no case shall the width of barrier exceed the width of barrier footing or overhang adjacent pavement.
7. No. 4 Rebar shall extend 12" past the construction joint at the completion of the days pour.

DESIGN APPROVED	STATE OF ARIZONA DEPARTMENT OF TRANSPORTATION DIVISION OF HIGHWAYS STANDARD DRAWINGS	REV. 10-89
APPROVED FOR DISTRIBUTION	MEDIAN BARRIER, CAST IN PLACE, SLIP FORM	DRAWING NO. C-10.12

GENERAL NOTES:

1. Concrete shall be Class S, design strength f'_c = 3000 p.s.i.
2. Unless otherwise specified on project plans, the Type 1 Median Barrier shall be constructed.
3. Median Barrier shall be placed upon either Asphaltic or Portland Cement Concrete Pavement.
4. Pavement thickness adjacent to Median Barrier shall be 3/4 inch minimum.
5. Joints shall be finished with a tool having a 1/4 inch radius.
6. This standard shall not be used when an individual run consists of less than five 20 foot sections.

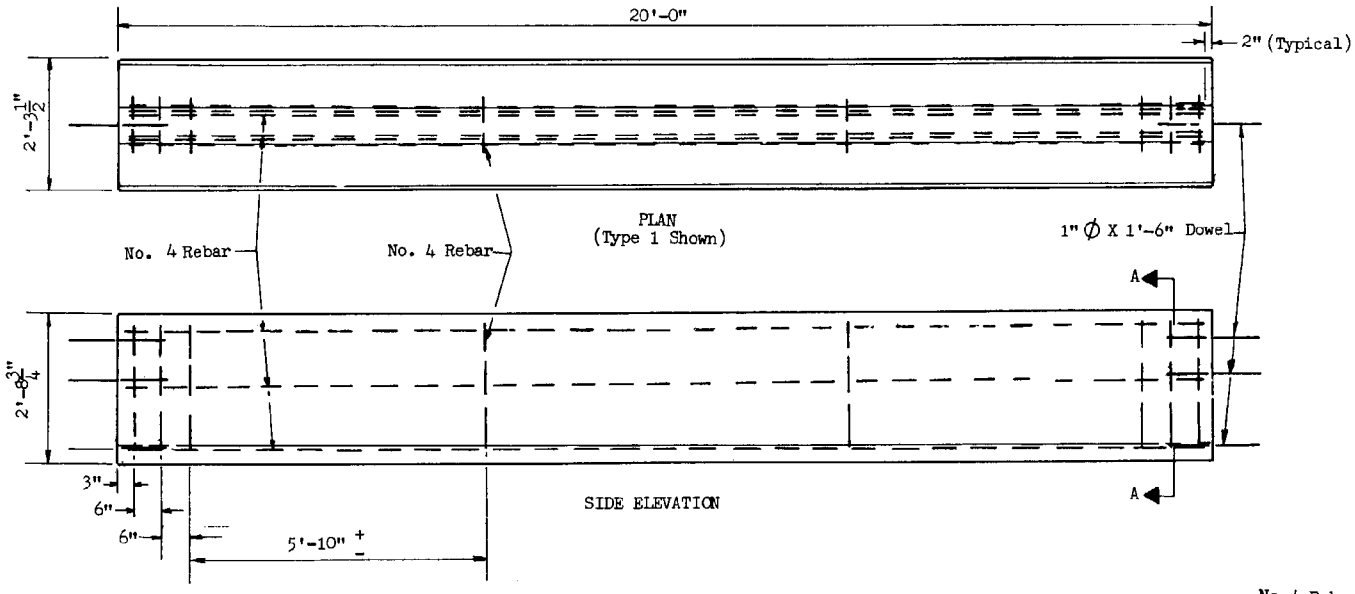

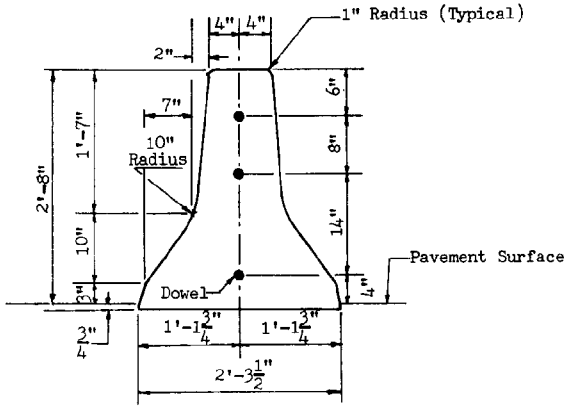

TYPE 1

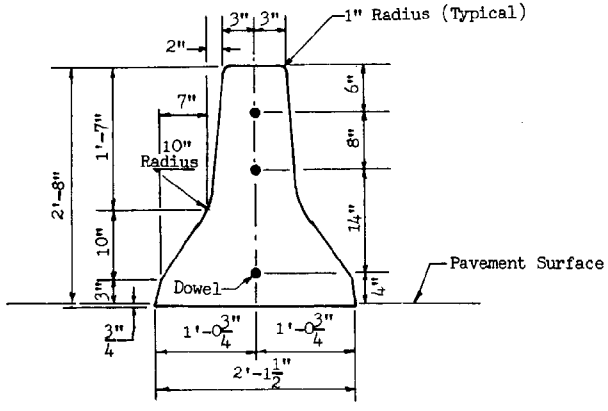

TYPE 2

END ELEVATION

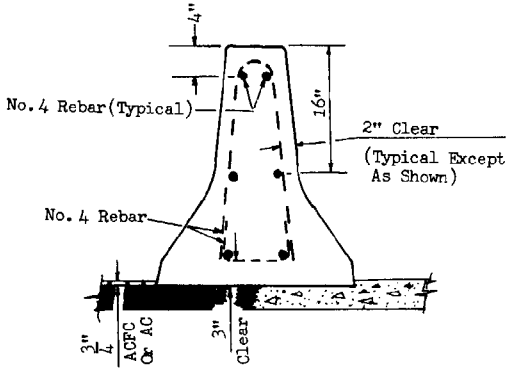

SECTION A-A

DESIGN APPROVED	STATE OF ARIZONA DEPARTMENT OF TRANSPORTATION DIVISION OF HIGHWAYS STANDARD DRAWINGS	REV. 1/83
APPROVED FOR DISTRIBUTION	MEDIAN BARRIER, CAST IN PLACE, FIXED FORM	DRAWING NO. C-10.13

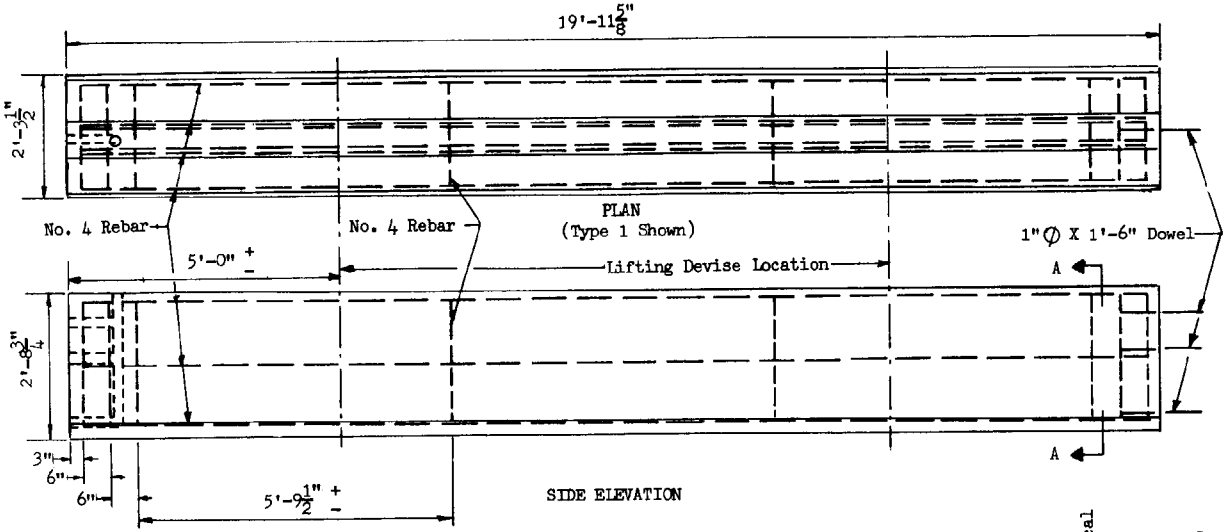

GENERAL NOTES:

1. Concrete shall be Class S, design strength f'_c = 3000 p.s.i.
2. Unless otherwise specified on the project plans, the Type 1 Median Barrier shall be constructed.
3. Median Barrier shall be placed upon either Asphaltic or Portland Cement Concrete Pavement.
4. Pavement thickness adjacent to Median Barrier shall be 3/4 inch minimum.
5. The Median Barrier shall be placed upon a bed of grout in order to provide a uniform bearing.
6. Doweled joints shall be grouted under pressure until all of the openings and the joint are filled.
7. This standard shall not be used when an individual run consists of less than five 20 foot sections.

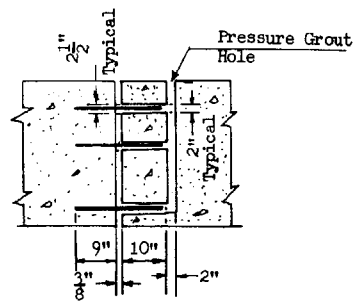

SECTION THROUGH JOINT

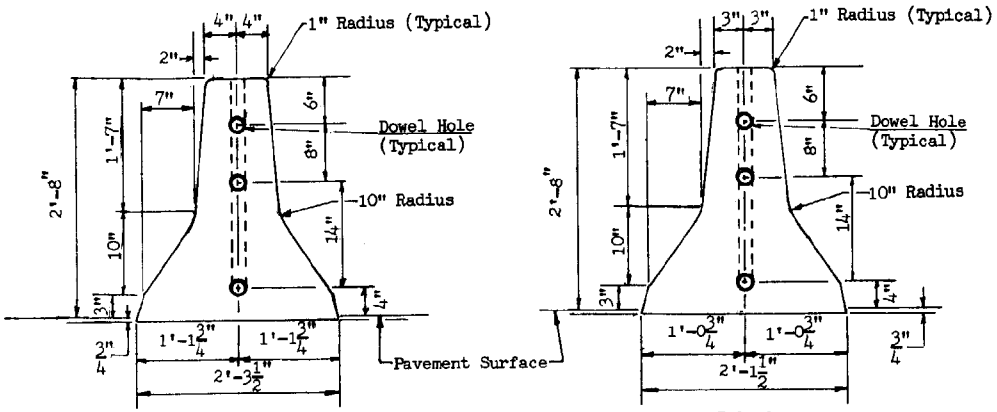

END ELEVATION

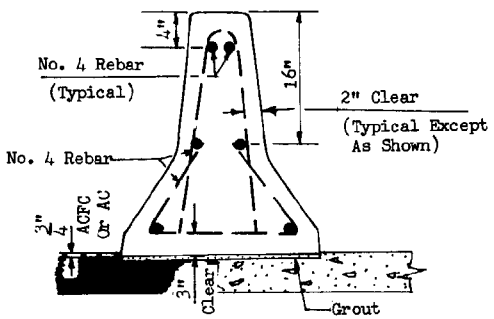

SECTION A-A

DESIGN APPROVED	STATE OF ARIZONA DEPARTMENT OF TRANSPORTATION DIVISION OF HIGHWAYS STANDARD DRAWINGS	REV. 1/83
APPROVED FOR DISTRIBUTION	MEDIAN BARRIER, PRECAST	DRAWING NO. C-10.14

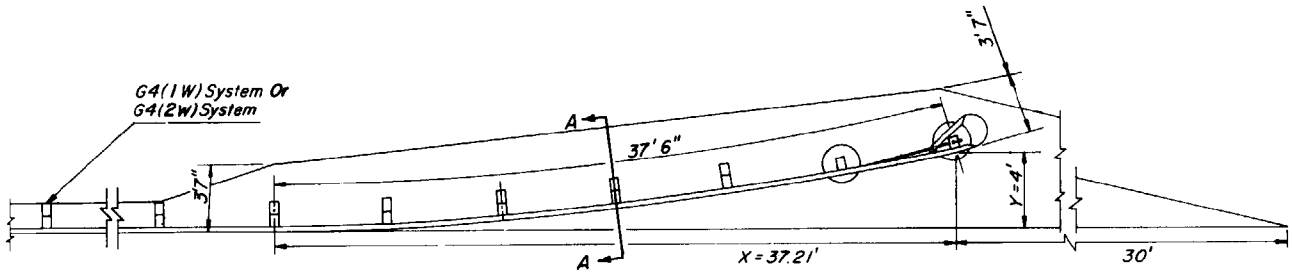

PLAN

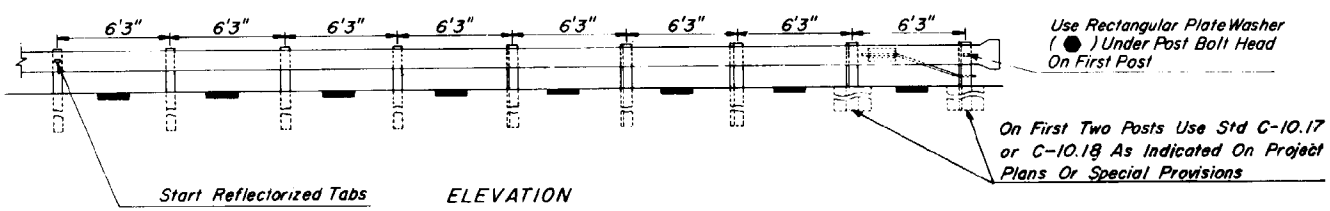

ELEVATION

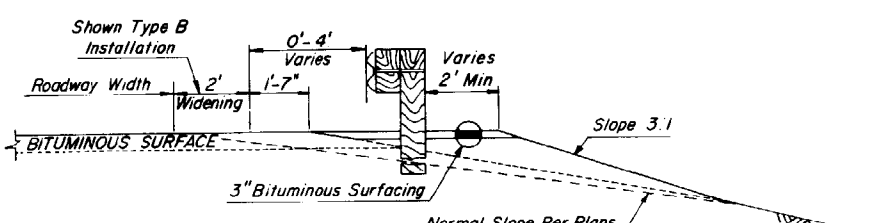

SECTION A-A

GENERAL NOTES

● -Indicates ARTBA designation.

FLARED GEOMETRICS		
Dst Along 37'6" Parabolic Curve	Dst Along X Axis	Dst Along Y Axis To Face Of Guard Rail
6'3"	6.25'	0.11'
12'6"	12.49'	0.45'
18'9"	18.71'	1.01'
25'0"	24.92'	1.79'
31'3"	31.08'	2.79'
37'6"	37.21'	4.00'

LAYOUT AND DETAILS OF THE FLARE

DESIGN APPROVED	STATE OF ARIZONA DEPARTMENT OF TRANSPORTATION DIVISION OF HIGHWAYS STANDARD DRAWINGS	REV. 7/85
APPROVED FOR DISTRIBUTION	FLARED BREAKAWAY CABLE TERMINAL ASSEMBLY (TIMBER POST)	DRAWING NO. C-10.15

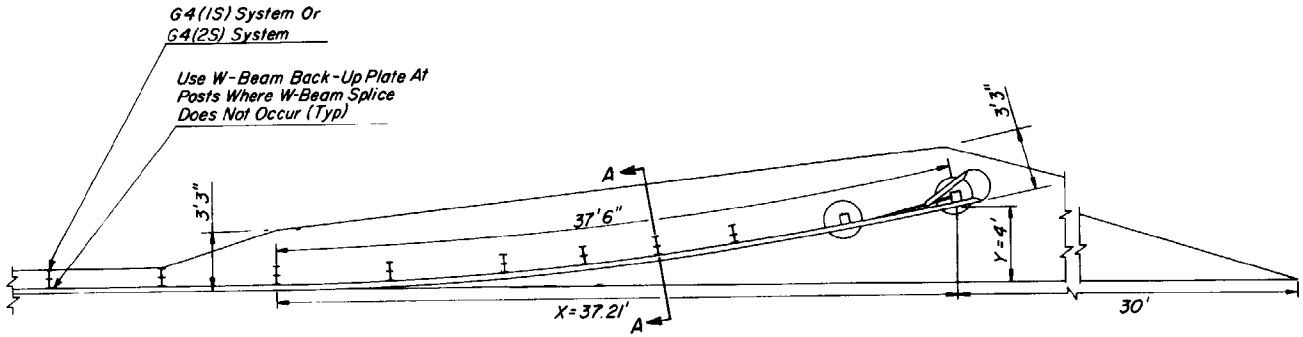

PLAN

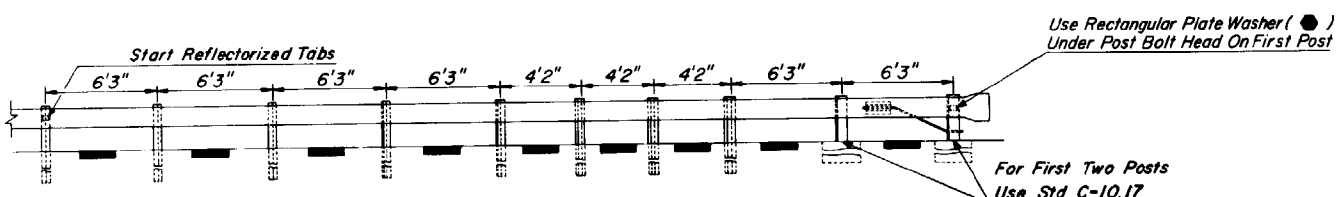

ELEVATION

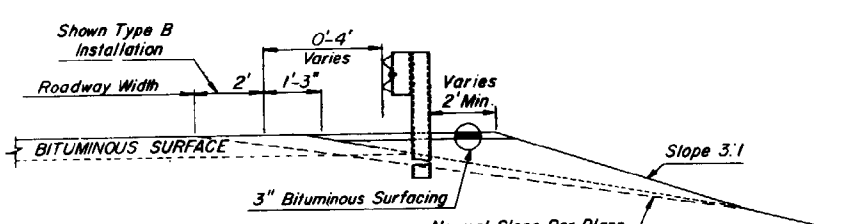

SECTION A-A

FLARED GEOMETRICS		
Dst Along 37'6" Parabolic Curve	Dst Along X Axis	Dst Along Y Axis To Face Of Guard Rail
6'3"	6.25'	0.11'
12'6"	12.49'	0.44'
16'8"	16.64'	0.79'
20'10"	20.78'	1.23'
25'0"	24.92'	1.78'
31'3"	31.08'	2.78'
37'6"	37.21'	4.00

GENERAL NOTES

●-Indicates ARTBA designation.

LAYOUT AND DETAILS OF THE FLARE

DESIGN APPROVED	STATE OF ARIZONA DEPARTMENT OF TRANSPORTATION DIVISION OF HIGHWAYS STANDARD DRAWINGS	REV. 7/85
APPROVED FOR DISTRIBUTION	FLARED BREAKAWAY CABLE TERMINAL ASSEMBLY (STEEL POST)	DRAWING NO. C-10.16

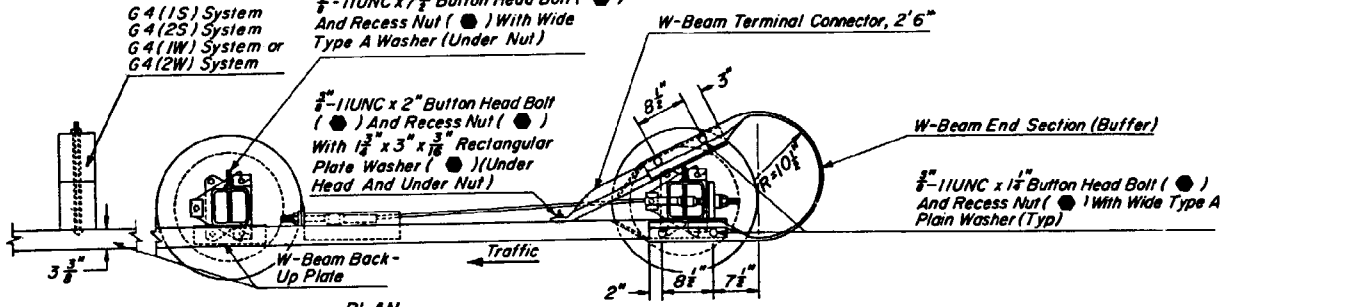

PLAN

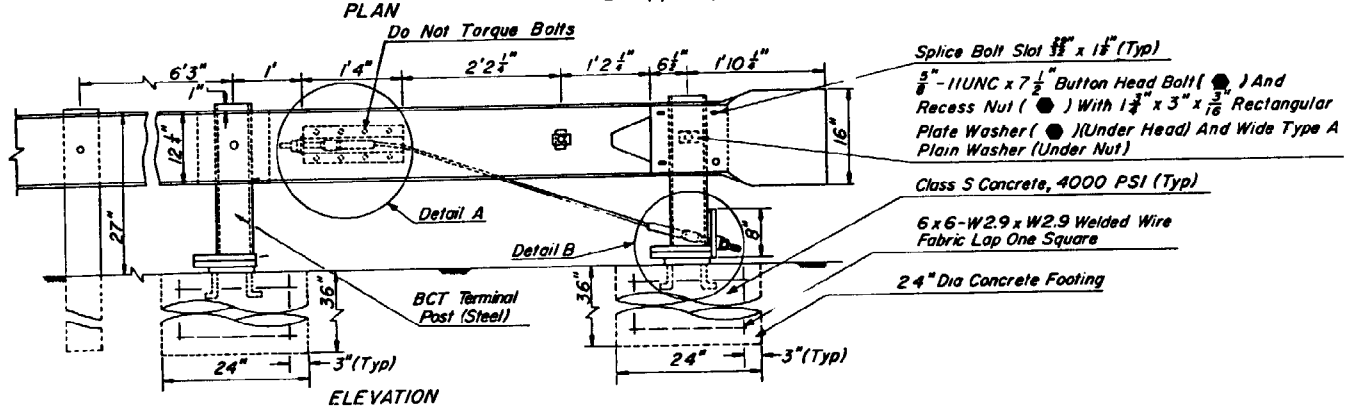

ELEVATION

GENERAL NOTES

1. BCT Cable Assembly shall be tightened to remove slack.
2. 5/8"-11UNC x 3 1/4" Heavy Hex Screw, connecting BCT Terminal Post (Steel) and BCT (Steel) Foundation Plates, shall be torqued to 170 ft. lbs.
3. To ensure that the BCT (Steel) Bearing Plate remains in position, one wrap of 14 Gauge Galvanized Steel Wire shall be wrapped around the BCT Terminal Post (Steel) and near the top of the plate.

●-Indicates ARTBA designation.

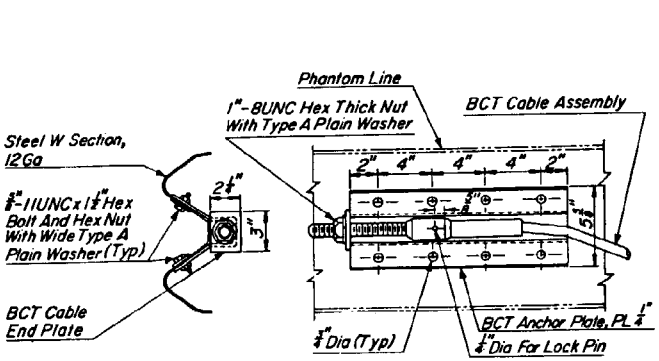

SIDE VIEW

FRONT VIEW

DETAIL A

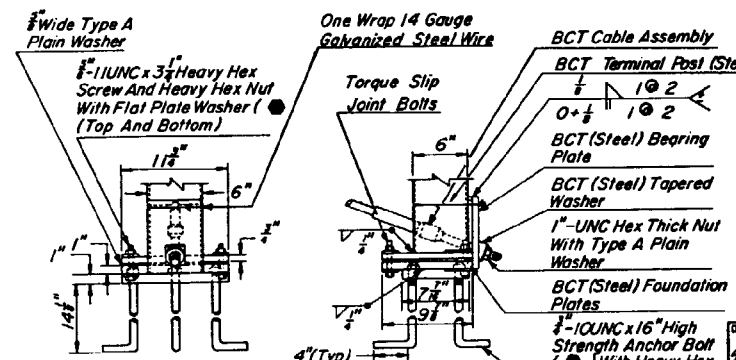

SIDE VIEW

FRONT VIEW

DETAIL B

DESIGN APPROVED	STATE OF ARIZONA DEPARTMENT OF TRANSPORTATION DIVISION OF HIGHWAYS STANDARD DRAWINGS	REV. 3/87
APPROVED FOR DISTRIBUTION	BCT ASSEMBLY STEEL	DRAWING NO. C-1017

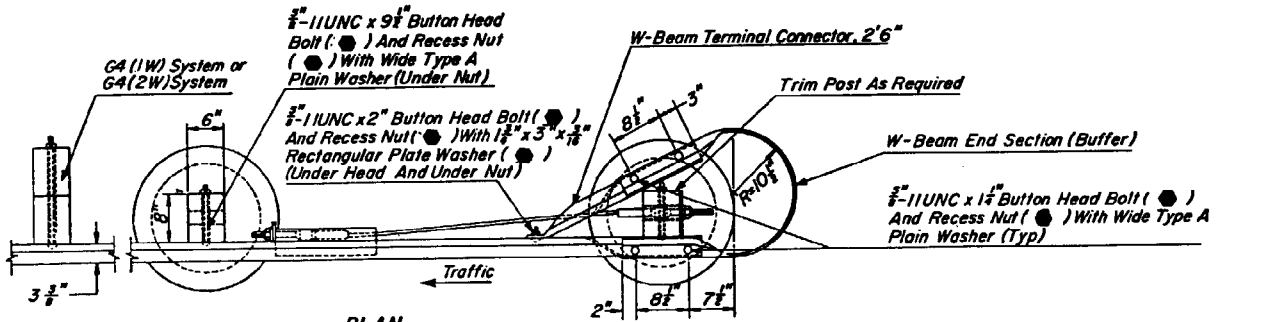

PLAN

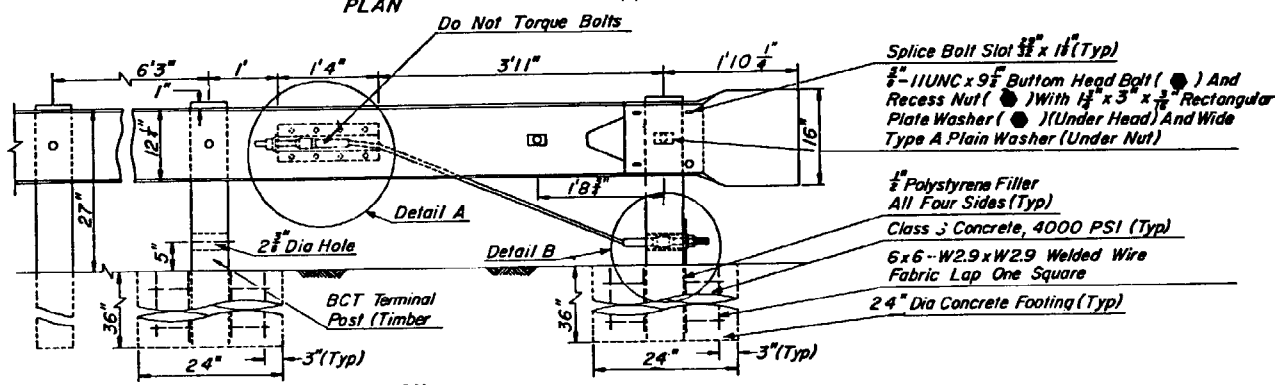

ELEVATION

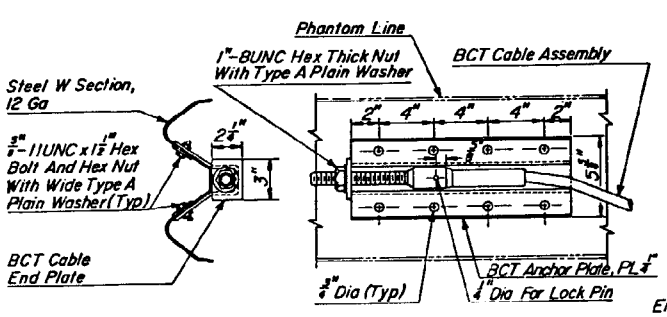

DETAIL A

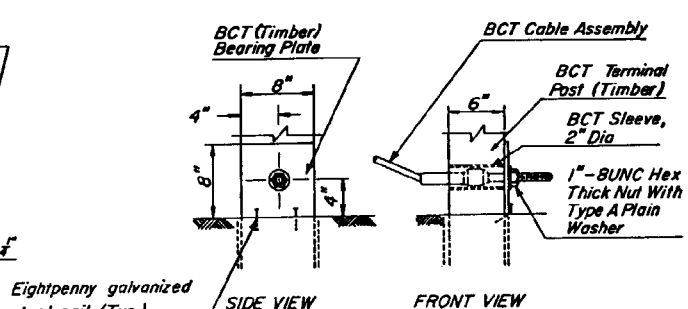

DETAIL B

GENERAL NOTES

1. BCT Cable Assembly shall be tightened to remove slack.

2. To ensure that the BCT (Timber) Bearing Plate remains in position, Two eightpenny galvanized steel nails shall be driven into the BCT Terminal Post (Timber) and bent over the plate.

● Indicates ARTBA designation.

DESIGN APPROVED	STATE OF ARIZONA DEPARTMENT OF TRANSPORTATION DIVISION OF HIGHWAYS STANDARD DRAWINGS	REV. 6/86 10/87
APPROVED FOR DISTRIBUTION	BCT ASSEMBLY TIMBER	DRAWING NO. C-10.18

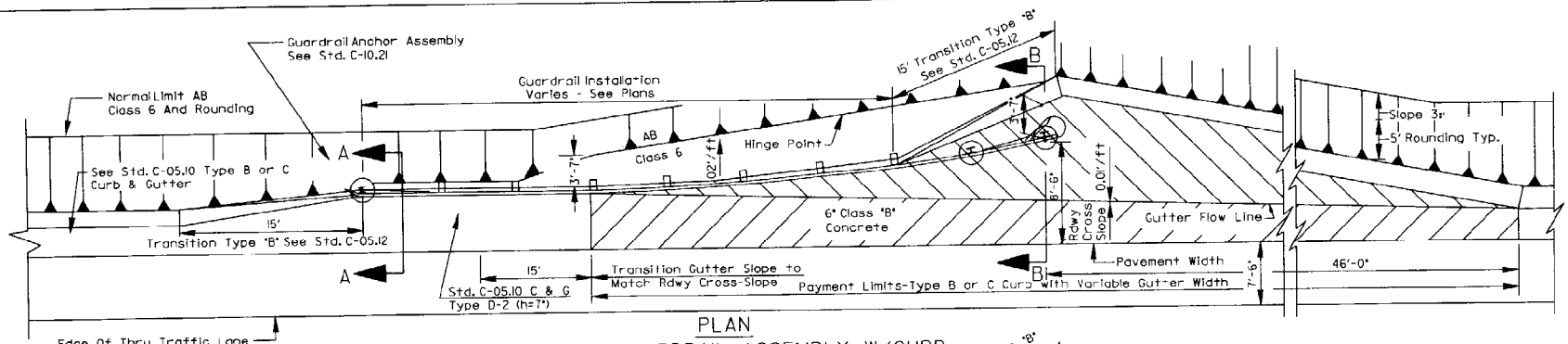

PLAN

TYPICAL GUARDRAIL ASSEMBLY W/CURB

TYPE 1

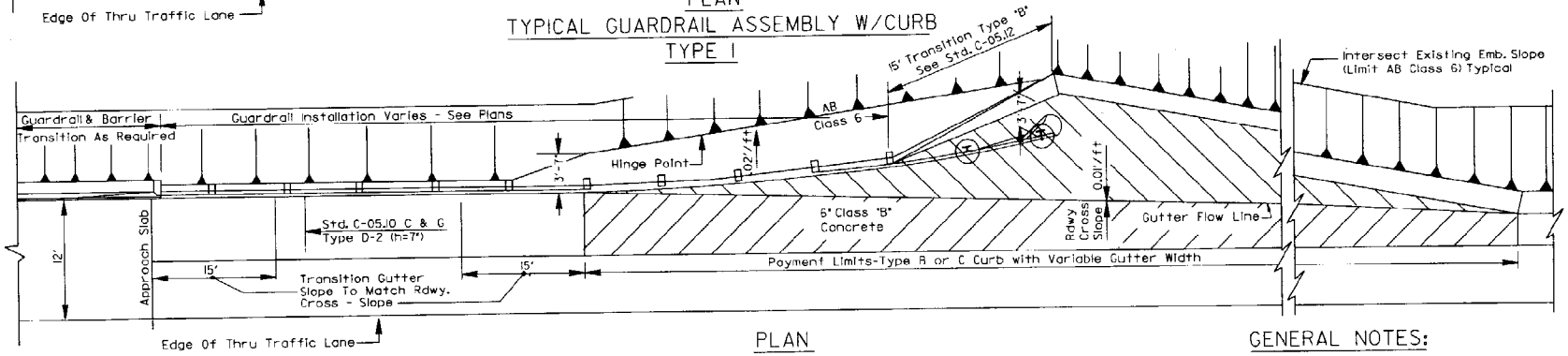

PLAN

GUARDRAIL ASSEMBLY W/CURB TYPICAL STRUCTURE APPROACH

TYPE 2

GENERAL NOTES:

1. See plans and barrier summary sheets for location and type of guardrail. Wood post installation shown.
2. For timber post & flare details not shown, see Std C-10.04, 10.15 & 10.18.
3. For steelpost & flare details not shown, see Std C-10.16, 10.17 & 10.25
4. See construction Standard Drawings C-10.21 through C-10.35 for dimensions and details not shown.
5. Bituminous joint filler (1/2") shallbe placed where the curb & gutter or concrete widening abuts slotted drains, catch basins, dados, barrier, etc. Two inch (2") deep scored joints to be placed to match adjacent joints in PCCP or at 15 ft or center where adjacent to AC or CRCP.
6. See Plans for Type & Location of Drainage Facilities.

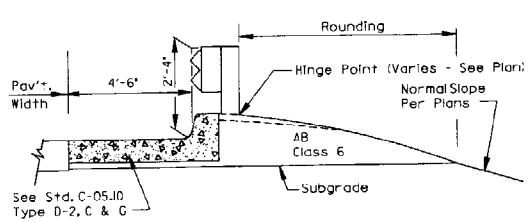

SECTION A-A

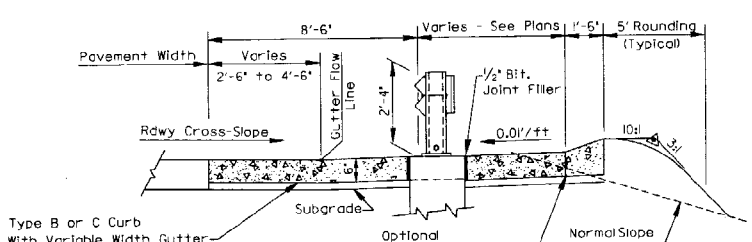

SECTION B-B

DESIGN APPROVED George R. Hale	STATE OF ARIZONA DEPARTMENT OF TRANSPORTATION DIVISION OF HIGHWAYS STANDARD DRAWINGS	10/89
APPROVED FOR DISTRIBUTION	GUARDRAIL ASSEMBLY	DRAWING NO. C-10.19 Sheet 1 of 2

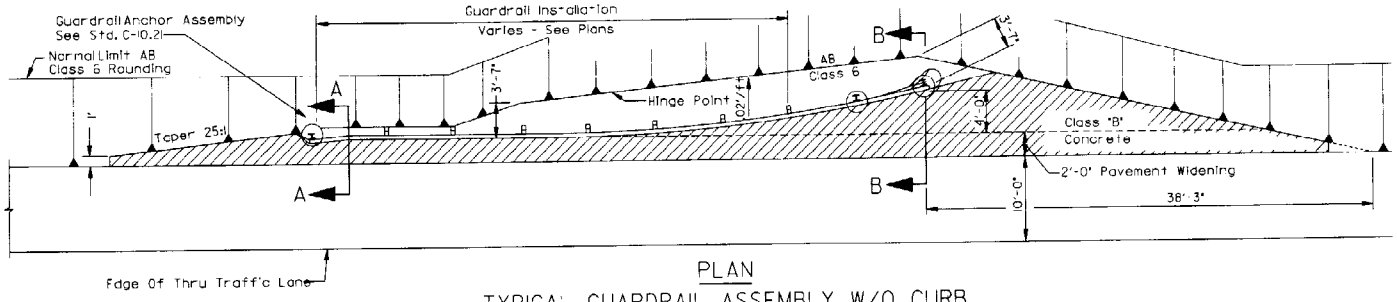

PLAN

TYPICAL GUARDRAIL ASSEMBLY W/O CURB

TYPE 3

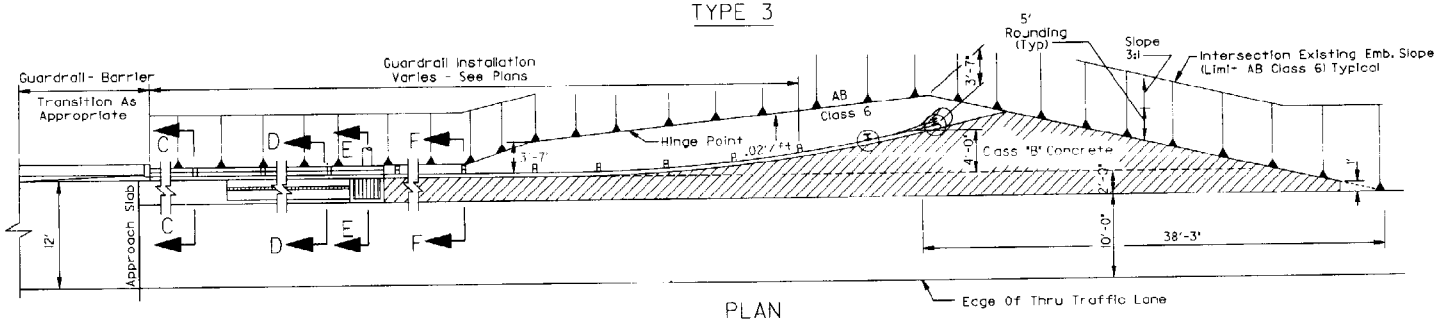

PLAN

GUARDRAIL ASSEMBLY - TYPICAL STRUCTURE APPROACH W/SLOTTED DRAIN

TYPE 4

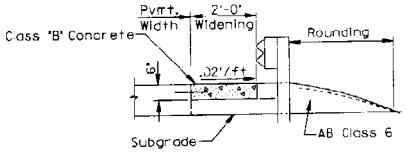

SECTION F-F

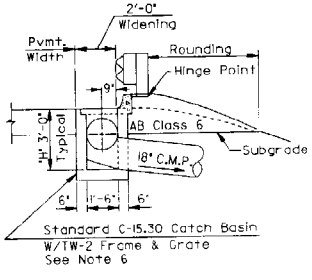

SECTION E-E

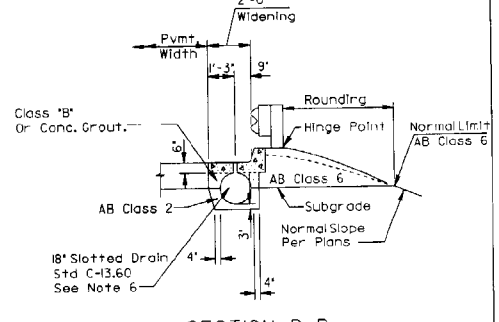

SECTION D-D

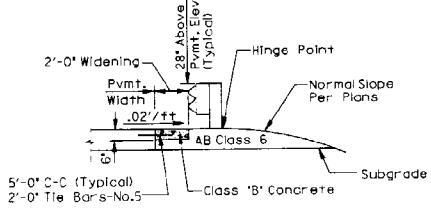

SECTION A-A

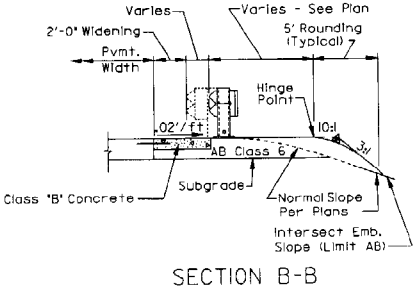

SECTION B-B

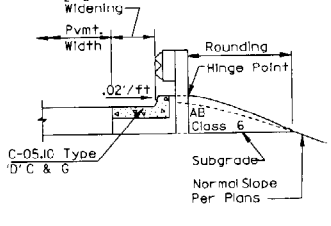

SECTION C-C

FOR GENERAL NOTES SEE SHEET 1 OF 2

DESIGN APPROVED George K. Hale	STATE OF ARIZONA DEPARTMENT OF TRANSPORTATION DIVISION OF HIGHWAYS STANDARD DRAWINGS	10/89
APPROVED FOR DISTRIBUTION	GUARDRAIL ASSEMBLY	DRAWING NO. C-10.19 Sheet 2 of 2

General Note:

Similar attenuation configuration required at both ends of barrier at overpass structures. See roadway plans.

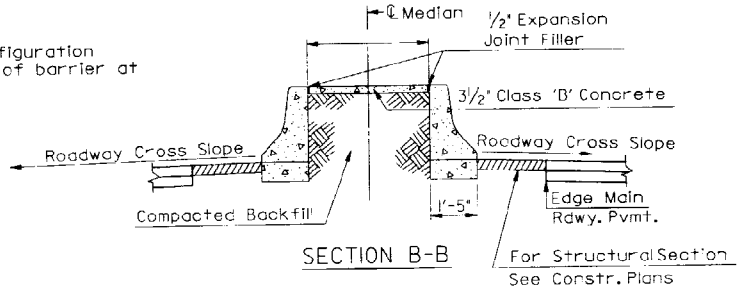

SECTION B-B

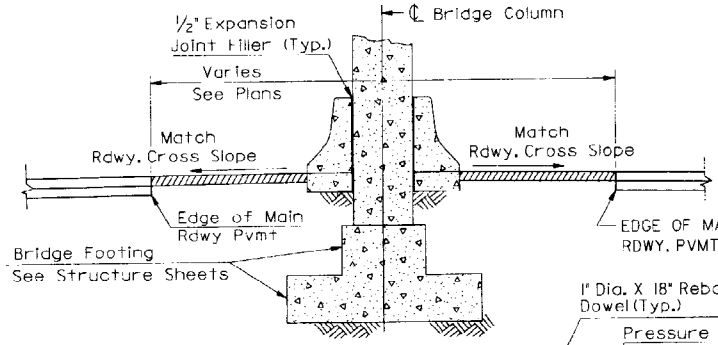

SECTION A-A

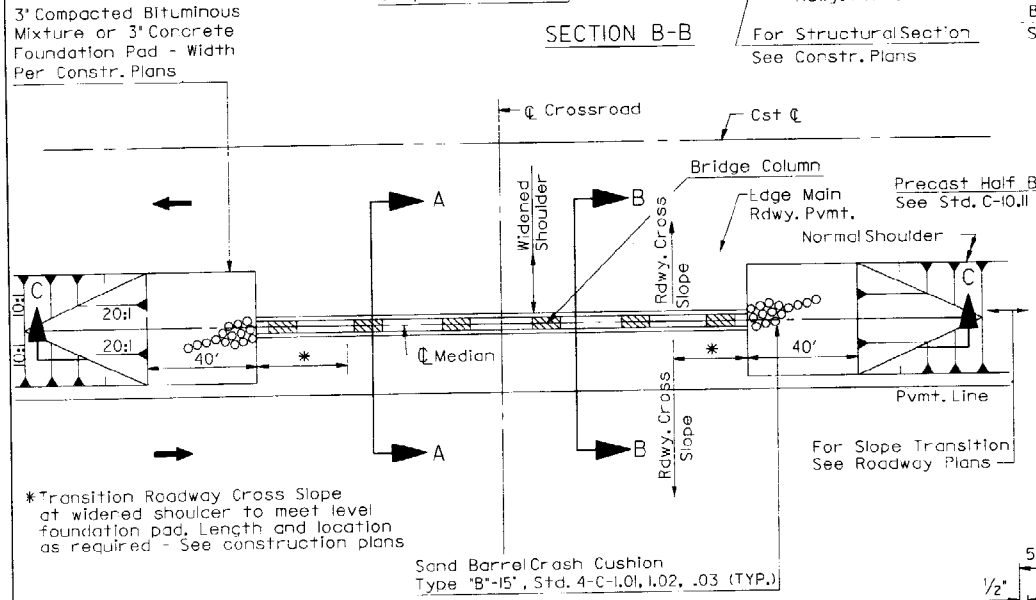

PLAN VIEW FOR TANGENT SECTION

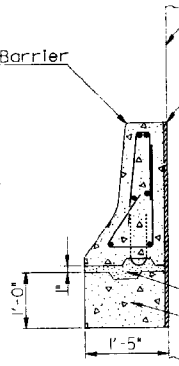

PRECAST

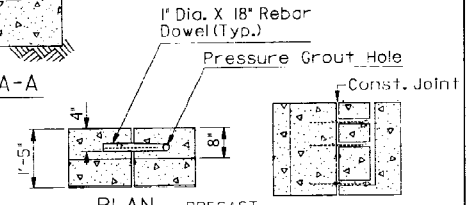

END CONSTRUCTION

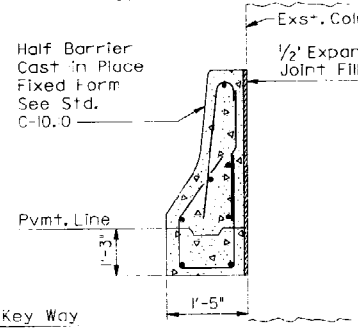

CAST-IN-PLACE

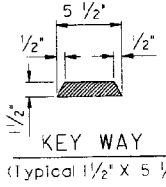

KEY WAY

(Typical 1 1/2" X 5 1/2")

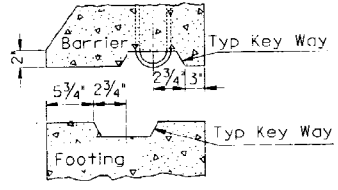

NOTES:

1.) Cast In Place Concrete Barrier shall be Class "S" (f'c - 3000 psi)

2.) Precast Concrete Barrier shall be Class "S" (f'c = 4000 psi)

PRECAST & CAST-IN-PLACE CONCRETE BARRIERS

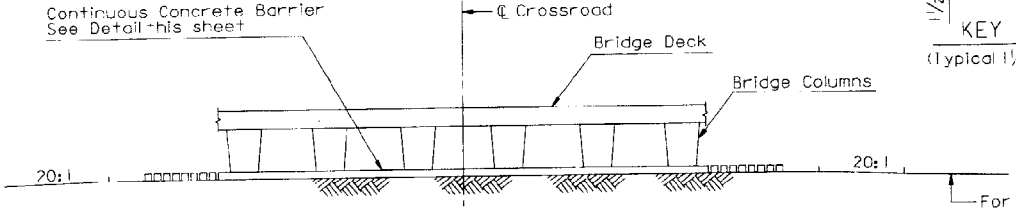

SECTION C-C

MODIFIED CRASH BARRIER

DESIGN APPROVED George R. Hale APPROVED FOR DISTRIBUTION	STATE OF ARIZONA DEPARTMENT OF TRANSPORTATION DIVISION OF HIGHWAYS STANDARD DRAWINGS	10/89
	BARRIER DETAILS AT PIERS	DRAWING NO. C-10.20

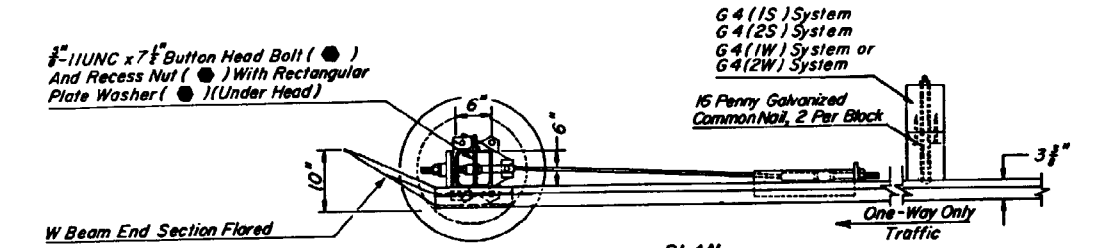

PLAN

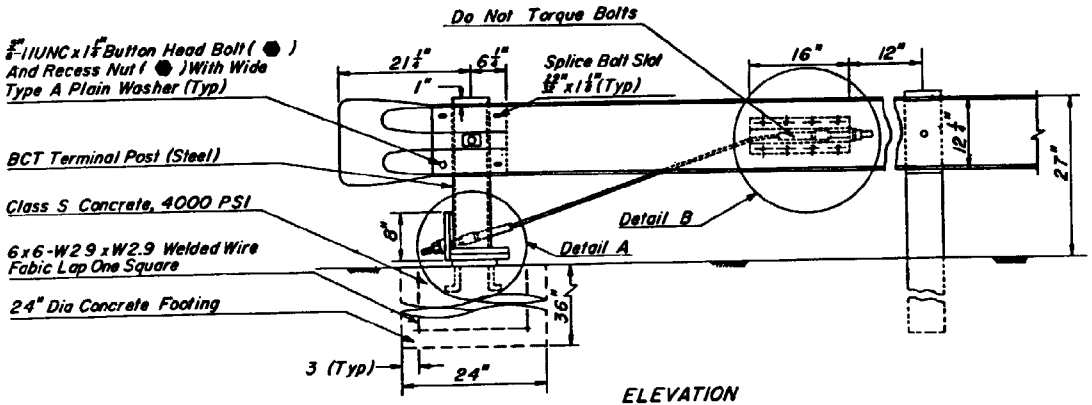

ELEVATION

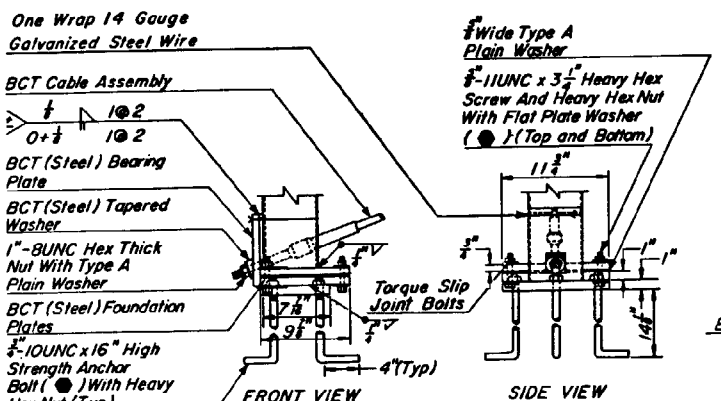

DETAIL A

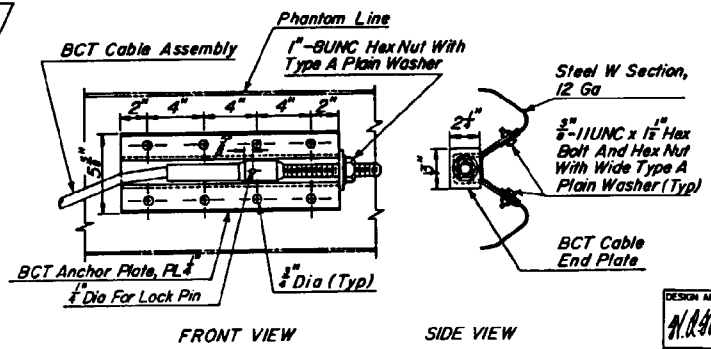

DETAIL B

GENERAL NOTES

1. BCT Cable Assembly shall be tightened to remove slack.

2. 3/8"-11UNC x 3 1/4" Heavy Hex Screw, connecting BCT Terminal Post (Steel) and BCT (Steel) Foundation Plates, shall be torqued to 170 ft. lbs.

3. To ensure that the BCT (Steel) Bearing Plate remains in position, one wrap of 14 Gauge Galvanized Steel Wire shall be wrapped around the BCT Terminal Post (Steel) and near the top of the plate.

●-Indicates ARTBA designation.

DESIGN APPROVED	STATE OF ARIZONA DEPARTMENT OF TRANSPORTATION DIVISION OF HIGHWAYS STANDARD DRAWINGS	REV. 3/87
APPROVED FOR DISTRIBUTION	GUARDRAIL ANCHOR ASSEMBLY STEEL TERMINAL POST	DRAWING NO. C-10.21

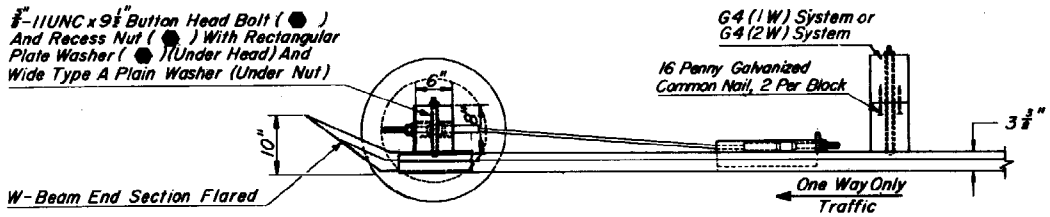

PLAN

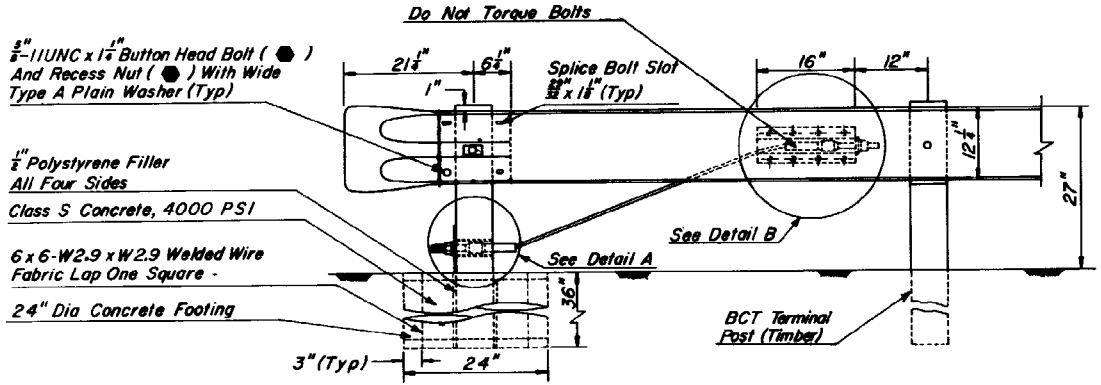

ELEVATION

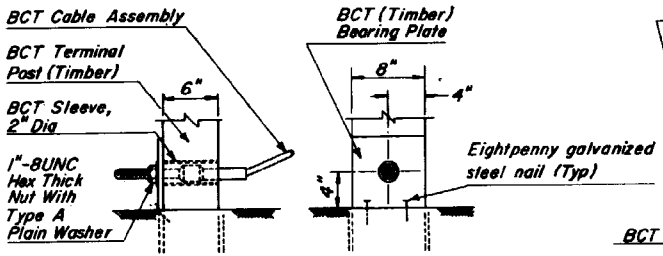

FRONT VIEW SIDE VIEW

DETAIL A

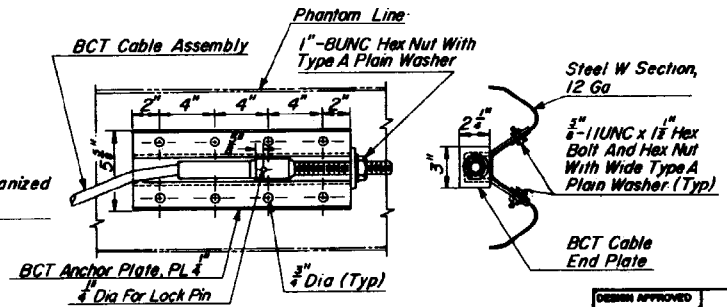

FRONT VIEW SIDE VIEW

DETAIL B

GENERAL NOTES

1. BCT Cable Assembly shall be tightened to remove slack.

● Indicates ARTBA designation.

DESIGN APPROVED	STATE OF ARIZONA DEPARTMENT OF TRANSPORTATION DIVISION OF HIGHWAYS STANDARD DRAWINGS	REV 6/86
ACCEPTED FOR DISTRIBUTION	GUARD RAIL ANCHOR ASSEMBLY TIMBER TERMINAL POST	DRAWING No. C-10.22

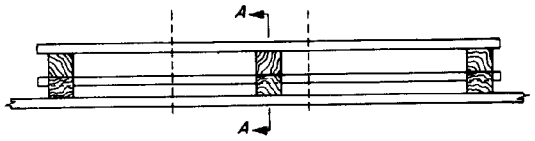

PLAN

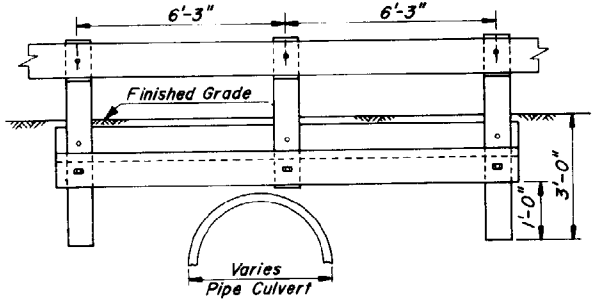

ELEVATION

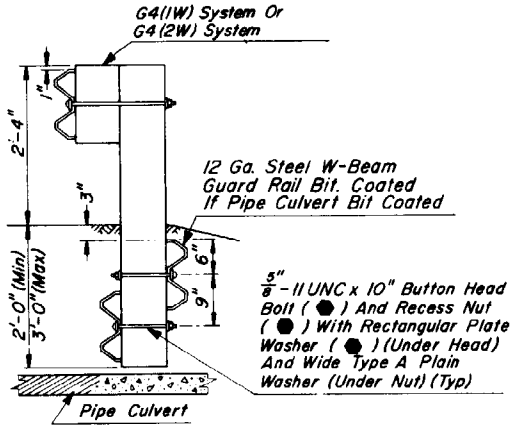

SECTION A-A

BURIED ANCHOR
PIPE CULVERT INSTALLATION

GENERAL NOTES

1. Extend buried W-Beam 6'-3" past last short post.
2. Drill through top of box culvert with rotary drill.
3. Bracket may be made of one piece hot bent, or two pieces welded together.
4. Short posts anchored to box culvert roof shall be 8"x8" only.
5. Rectangular Plate Washer (⬢) shall be used only at below ground connections

⬢-Indicates ARTBA designation.

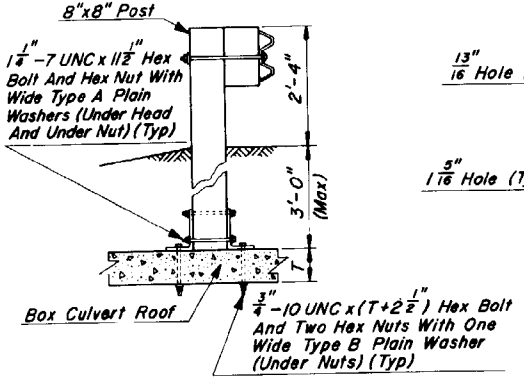

INSTALLATION DETAIL

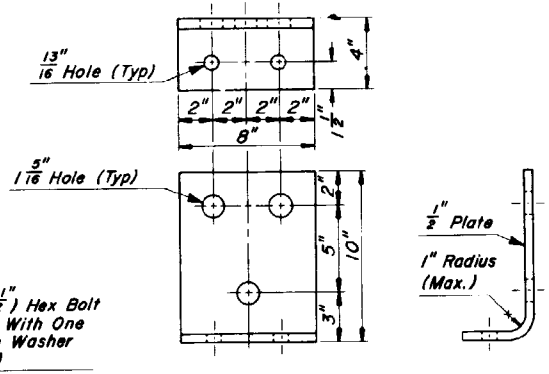

BRACKET DETAIL

BOLTED ANCHOR
BOX CULVERT INSTALLATION

DESIGN APPROVED	STATE OF ARIZONA DEPARTMENT OF TRANSPORTATION DIVISION OF HIGHWAYS STANDARD DRAWINGS	REV. 7/85
APPROVED FOR DISTRIBUTION	BURIED & BOLTED ANCHOR TIMBER POST	DRAWING No. C-10.23

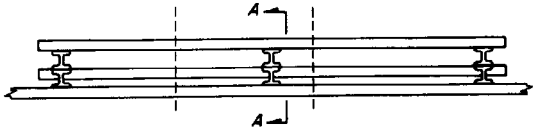

PLAN

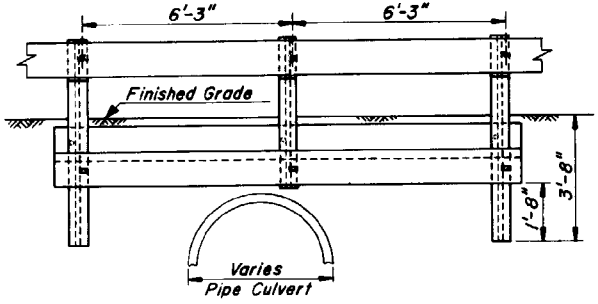

ELEVATION

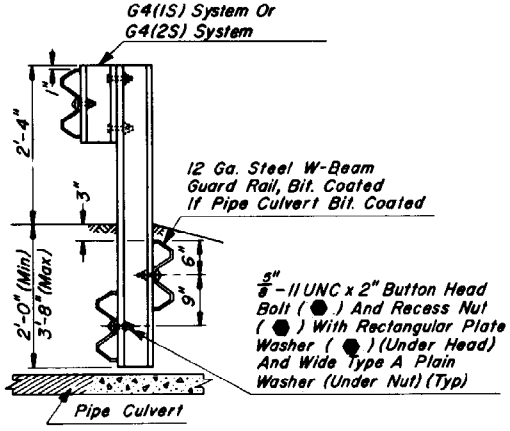

SECTION A-A

BURIED ANCHOR
PIPE CULVERT INSTALLATION

GENERAL NOTES

1. Extend buried W-Beam 6'-3" past last short post.
2. Drill through top of box culvert with rotary drill.
3. Bracket may be made of one piece hot bent, or two pieces welded together.
4. Rectangular Plate Washer (●) shall be used only at below ground connections.

● -Indicates ARTBA designation.

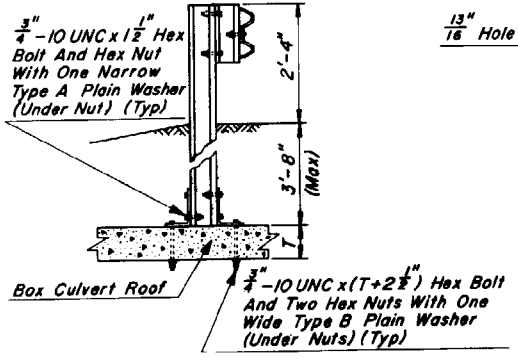

INSTALLATION DETAIL

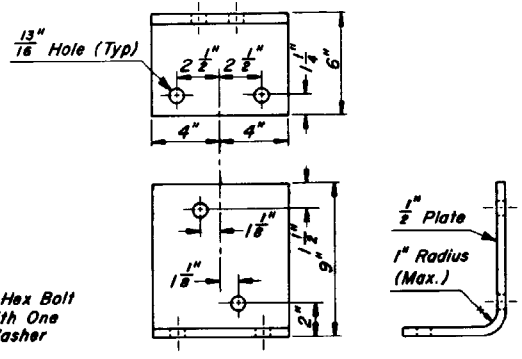

BRACKET DETAIL

BOLTED ANCHOR
BOX CULVERT INSTALLATION

DESIGN APPROVED	STATE OF ARIZONA DEPARTMENT OF TRANSPORTATION DIVISION OF HIGHWAYS STANDARD DRAWINGS	REV. 7/85
APPROVED FOR DISTRIBUTION	BURIED & BOLTED ANCHOR STEEL POST	DRAWING No. C-1024

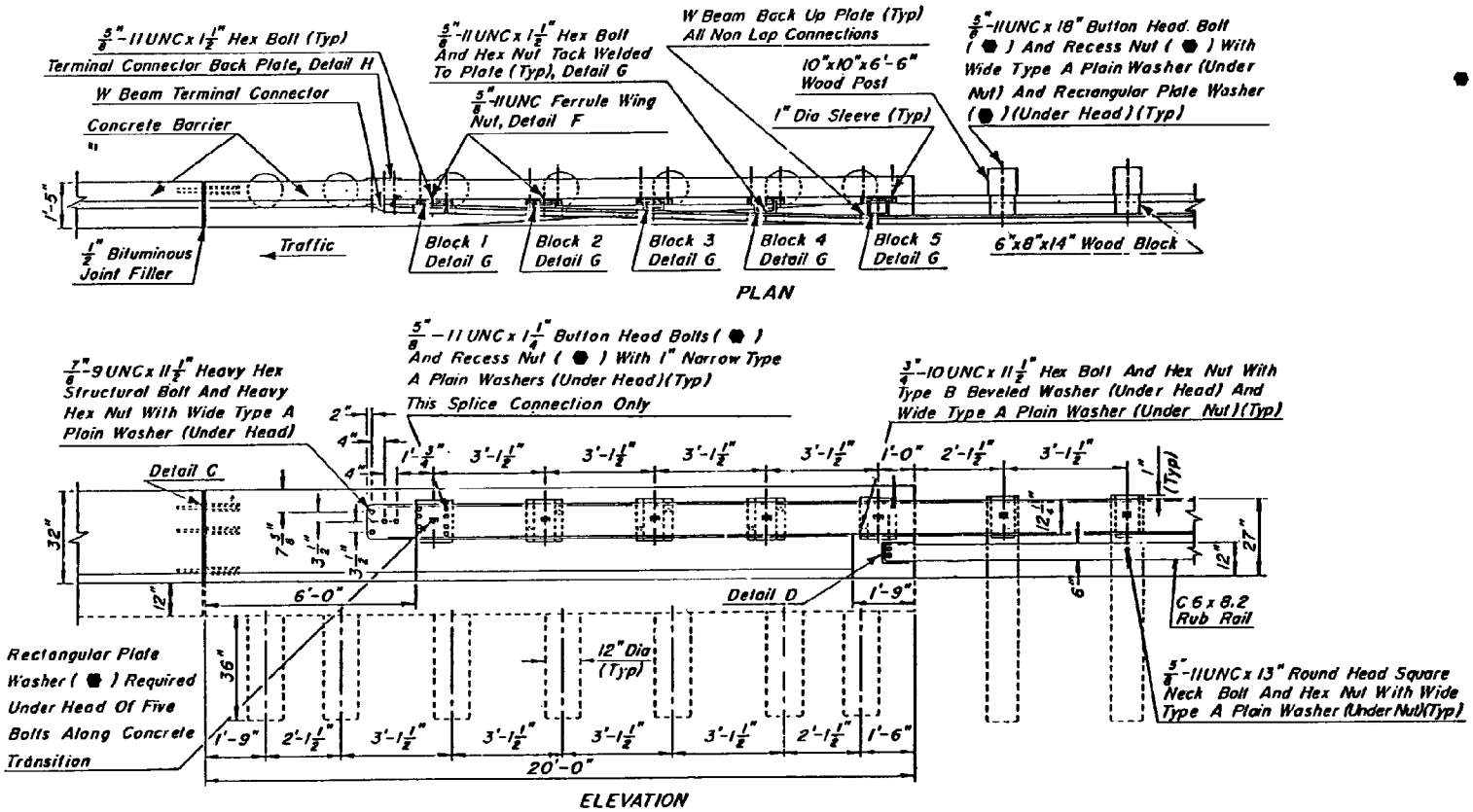

GENERAL NOTES

● –Indicates ARTBA designation.

DESIGN APPROVED	STATE OF ARIZONA DEPARTMENT OF TRANSPORTATION DIVISION OF HIGHWAYS STANDARD DRAWINGS	REV. 3/87
APPROVED FOR DISTRIBUTION	TRANSITION W BEAM (TIMBER POST) TO CONCRETE HALF BARRIER	DRAWING NO. C-10.25 Sheet 1 of 5

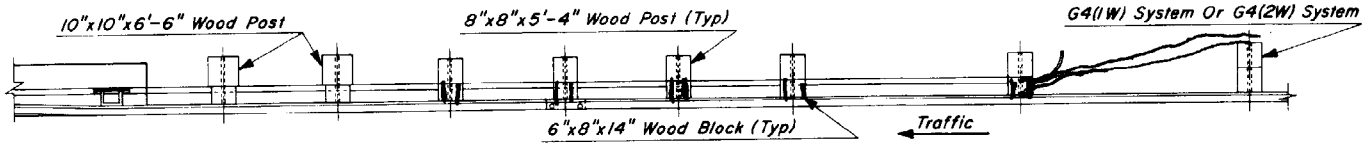

PLAN

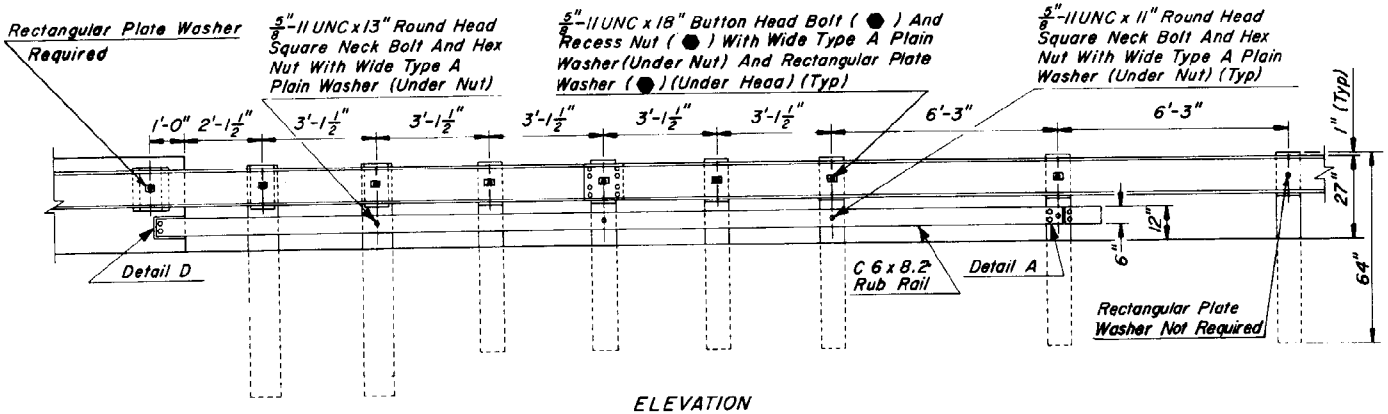

ELEVATION

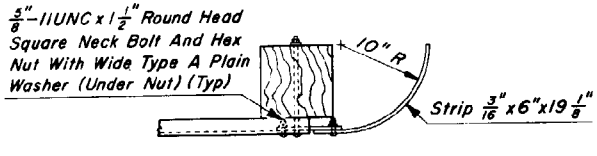

PLAN

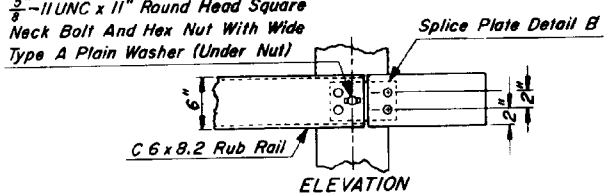

ELEVATION

DETAIL A

RUB RAIL TERMINAL ASSEMBLY

Note : All Slots 11/16" x 2", All Square Holes 11/16"

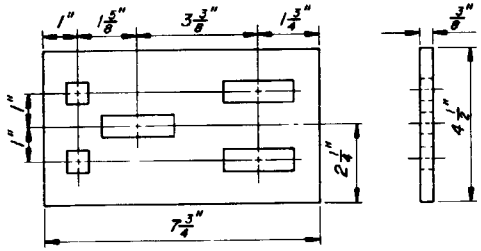

DETAIL B

RUB RAIL SPLICE PLATE

GENERAL NOTES

● -Indicates ARTBA designation.

DESIGN APPROVED	STATE OF ARIZONA DEPARTMENT OF TRANSPORTATION DIVISION OF HIGHWAYS STANDARD DRAWINGS	REV. 6/86
APPROVED FOR DISTRIBUTION	TRANSITION W BEAM (TIMBER POST) TO CONCRETE HALF BARRIER	DRAWING NO. C-10.25 Sheet 2 of 5

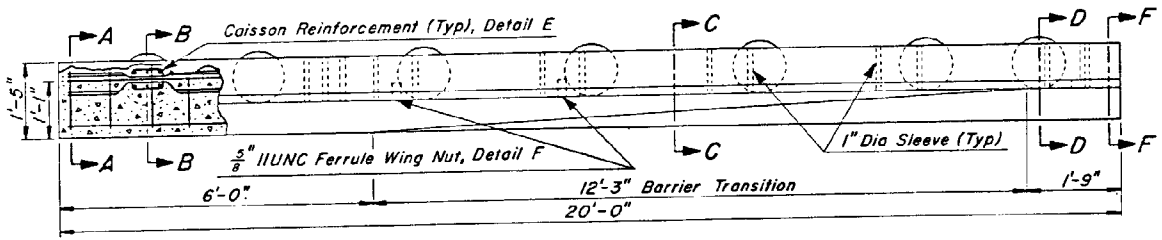

PLAN

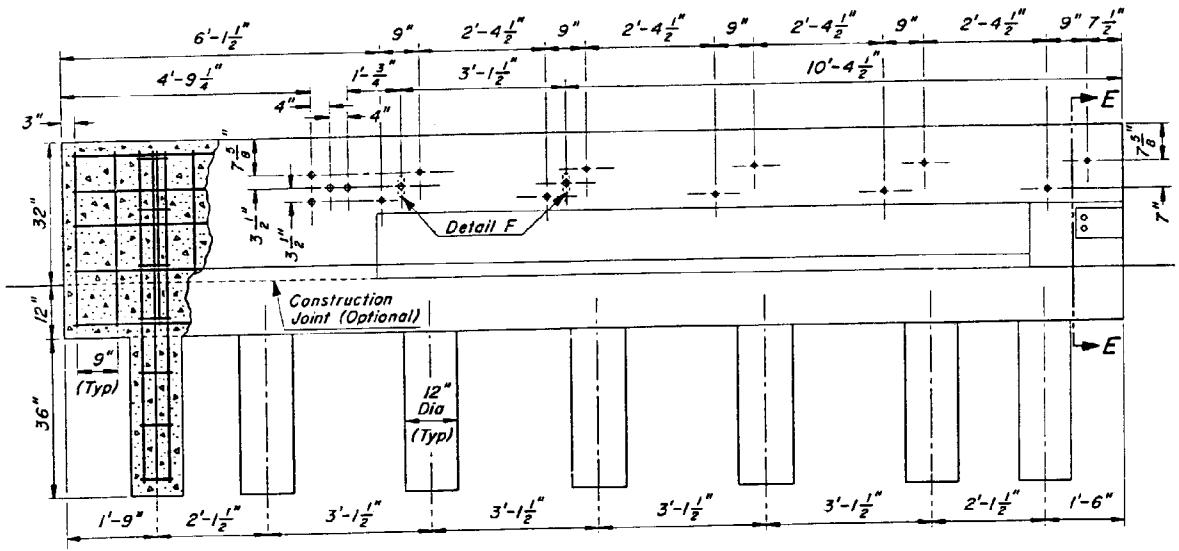

ELEVATION

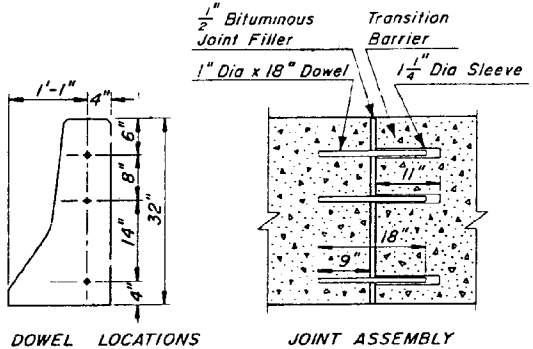

DETAIL C

DOWEL INSTALLATION AND CONSTRUCTION JOINT

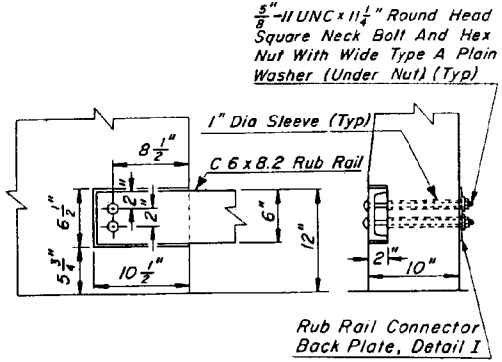

DETAIL D

RUB RAIL ANCHOR

DESIGN APPROVED W.A. Wakefield	STATE OF ARIZONA DEPARTMENT OF TRANSPORTATION DIVISION OF HIGHWAYS STANDARD DRAWINGS	REV. 3/87
APPROVED FOR DISTRIBUTION James A. McGee	TRANSITION W BEAM (TIMBER POST) TO CONCRETE HALF BARRIER	DRAWING NO. C-10.25 Sheet 3 of 5

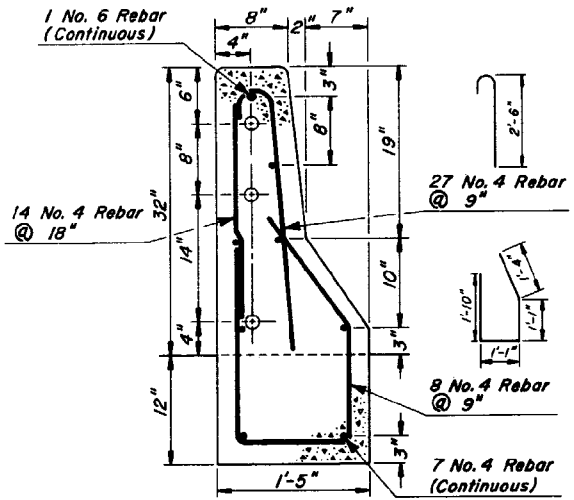

SECTION A-A

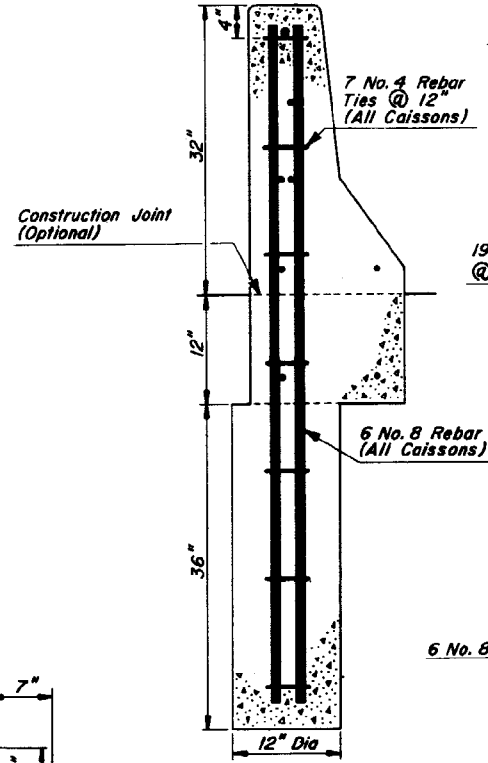

SECTION B-B

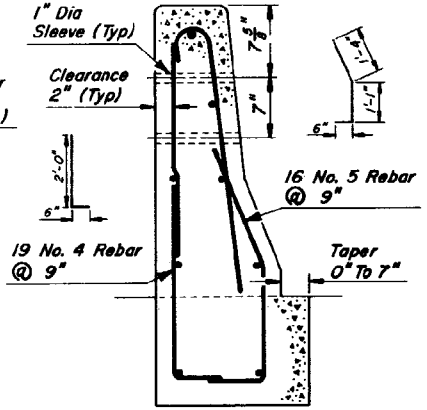

SECTION C-C

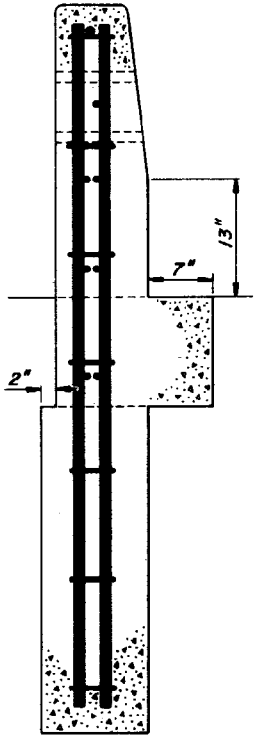

SECTION D-D

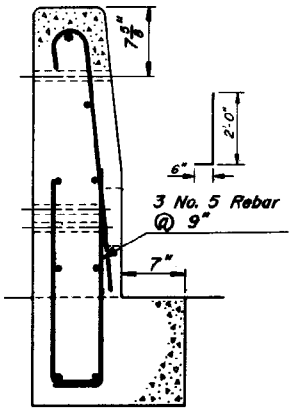

SECTION E-E

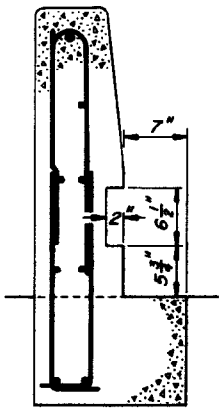

SECTION F-F

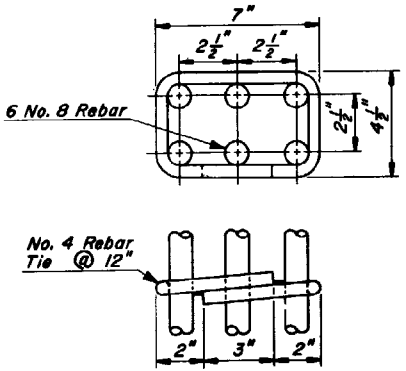

DETAIL E

CAISSON REINFORCEMENT

DESIGN APPROVED	STATE OF ARIZONA DEPARTMENT OF TRANSPORTATION DIVISION OF HIGHWAYS STANDARD DRAWINGS	REV. 7/85
DRAWING FOR DISTRIBUTION	TRANSITION W BEAM (TIMBER POST) TO CONCRETE HALF BARRIER	DRAWING NO. C-10.25 Sheet 4 of 5

	DIMENSION	
BLOCK	A	B
1	0"	0"
2	$1\frac{1}{4}$"	$\frac{7}{8}$"
3	$2\frac{1}{2}$"	$1\frac{3}{4}$"
4	$3\frac{11}{16}$"	$2\frac{5}{8}$"
5	$4\frac{15}{16}$"	$3\frac{7}{16}$"

NOTE: Block 1 Is A $\frac{1}{4}$" x 12" x 14" Plate
Block 2 May Be A Solid 6" x 14" Plate Tapered In Thickness From $1\frac{1}{4}$" To $\frac{7}{8}$" Welded To $\frac{1}{4}$" x 12" x 14" Plate

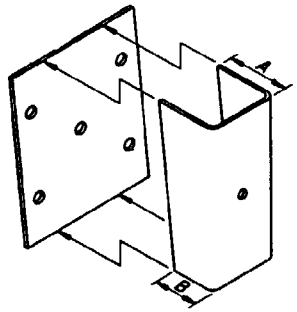

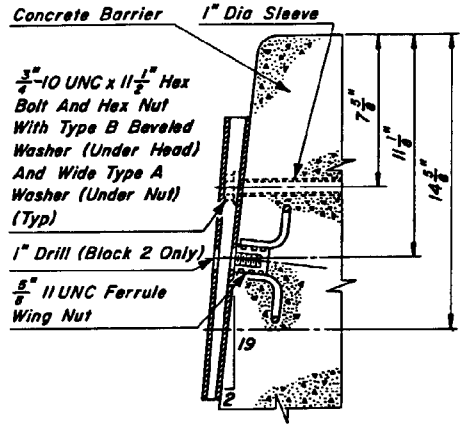

DETAIL F

SECTION THRU BLOCK AND ANCHORAGE

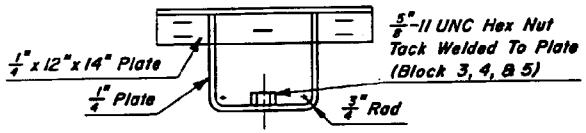

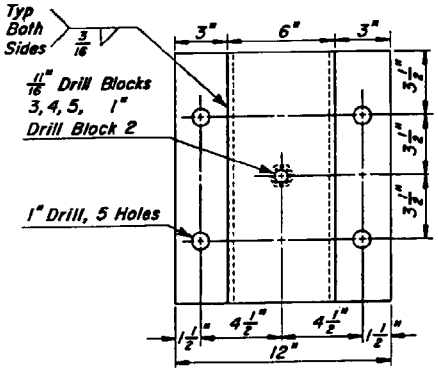

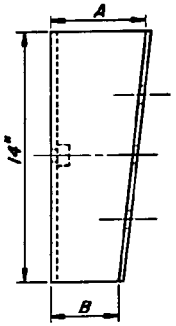

DETAIL G

BLOCK DETAILS

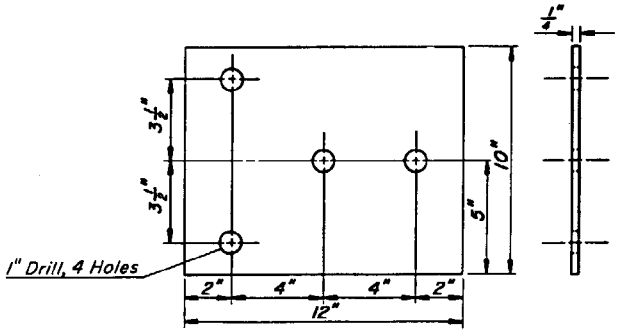

DETAIL H

TERMINAL CONNECTOR BACK PLATE

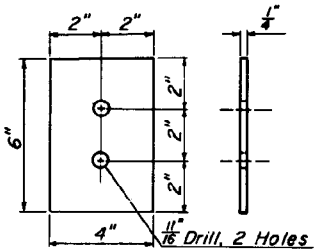

DETAIL I

RUB RAIL CONNECTOR BACK PLATE

DESIGN APPROVED: W.A. Wakefield	STATE OF ARIZONA DEPARTMENT OF TRANSPORTATION DIVISION OF HIGHWAYS STANDARD DRAWINGS	REV. 3/87
APPROVED FOR DISTRIBUTION: James A. Smith	TRANSITION W BEAM (TIMBER POST) TO CONCRETE HALF BARRIER	DRAWING NO. C-10.25 Sheet 5 of 5

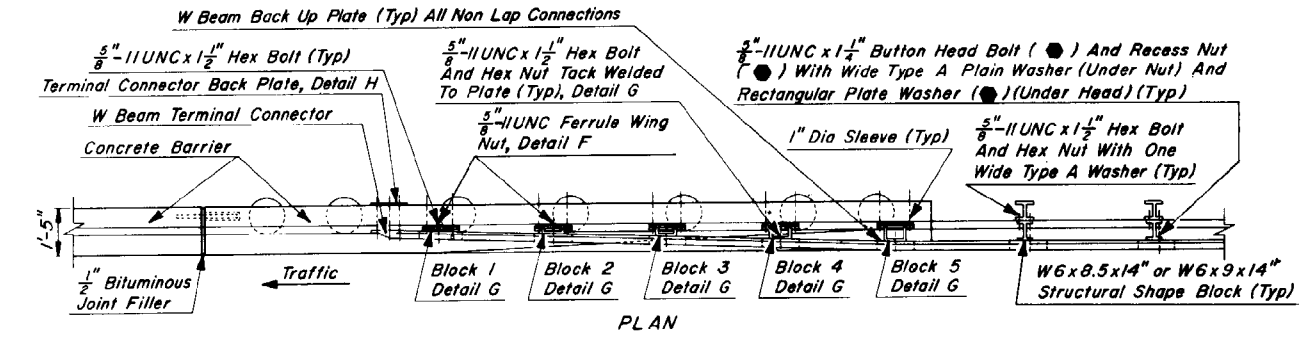

PLAN

W8 X 10 X 14"

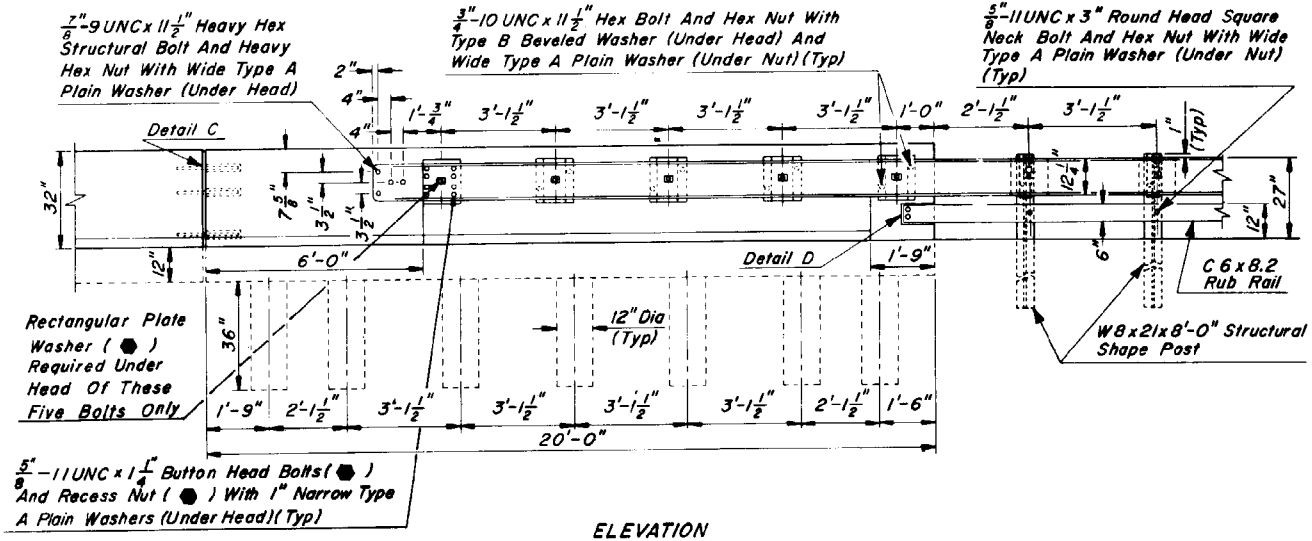

ELEVATION

GENERAL NOTES

● - Indicates ARTBA designation.

DESIGN APPROVED	STATE OF ARIZONA DEPARTMENT OF TRANSPORTATION DIVISION OF HIGHWAYS STANDARD DRAWINGS	REV. 6/86
APPROVED FOR DISTRIBUTION	TRANSITION W BEAM (STEEL POST) TO CONCRETE HALF BARRIER	DRAWING NO. C-10.30 Sheet 1 of 5

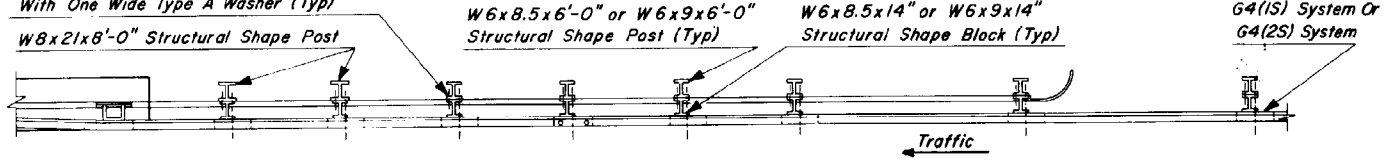

PLAN

GENERAL NOTES

⬢—Indicates ARTBA designation.

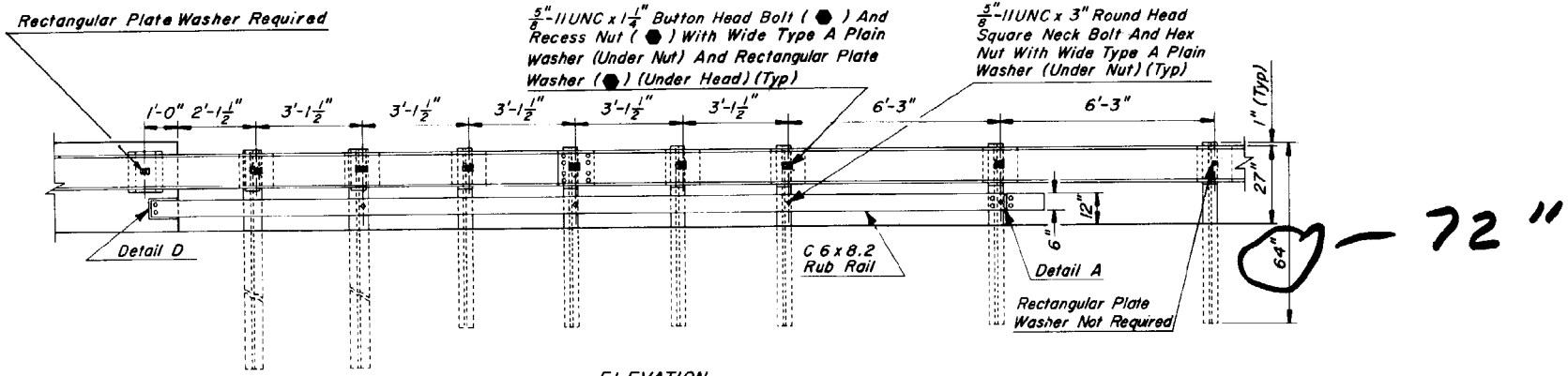

ELEVATION

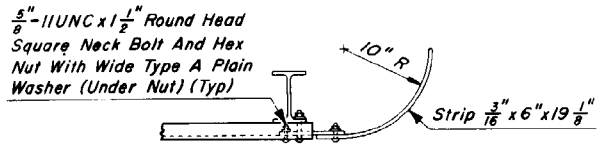

PLAN

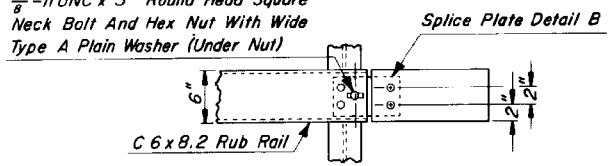

ELEVATION

DETAIL A

RUB RAIL TERMINAL ASSEMBLY

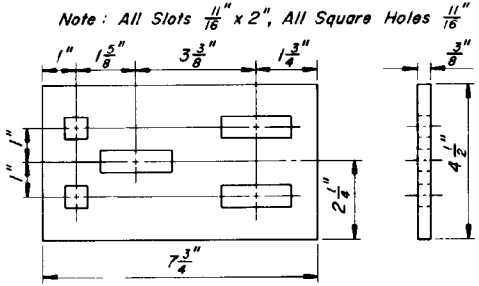

DETAIL B

RUB RAIL SPLICE PLATE

DESIGN APPROVED	STATE OF ARIZONA DEPARTMENT OF TRANSPORTATION DIVISION OF HIGHWAYS STANDARD DRAWINGS	REV. 6/86
APPROVED FOR DISTRIBUTION	TRANSITION W BEAM (STEEL POST) TO CONCRETE HALF BARRIER	DRAWING NO. C-10.30 Sheet 2 of 5

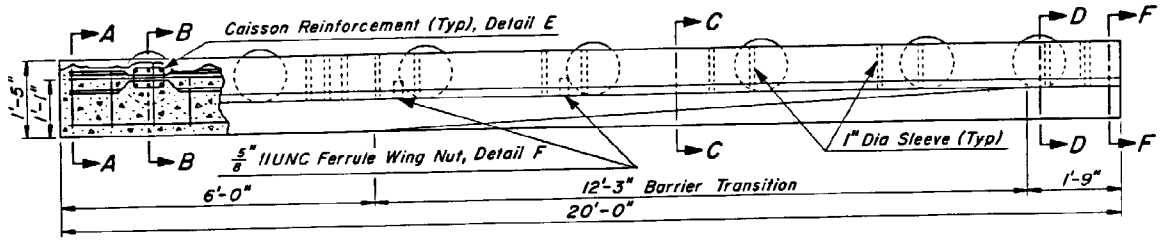

PLAN

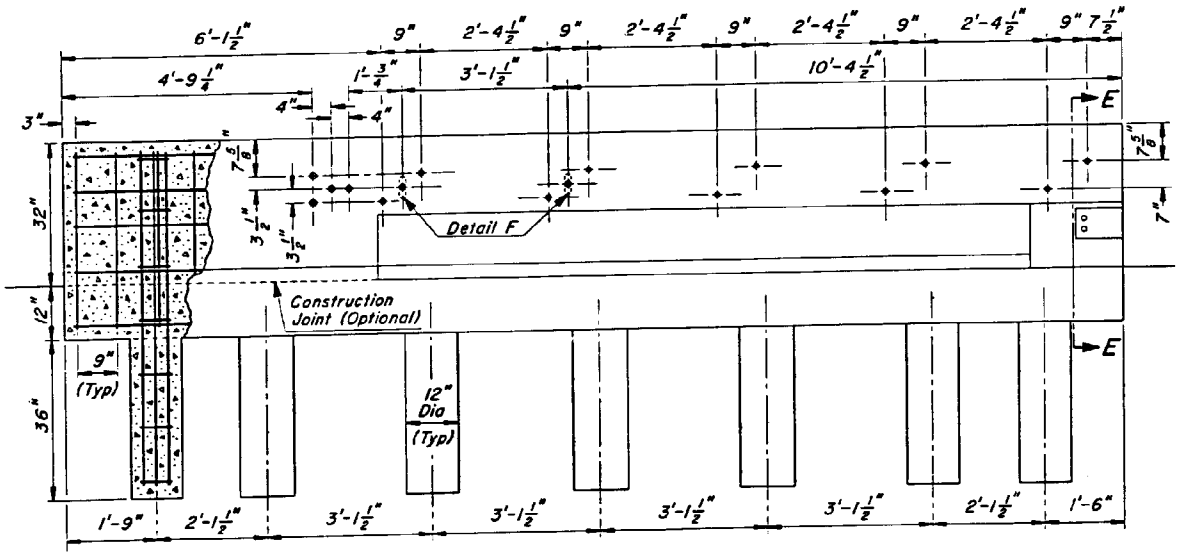

ELEVATION

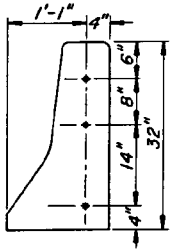

DOWEL LOCATIONS

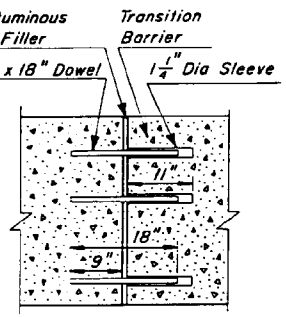

JOINT ASSEMBLY

DETAIL C

DOWEL INSTALLATION AND CONSTRUCTION JOINT

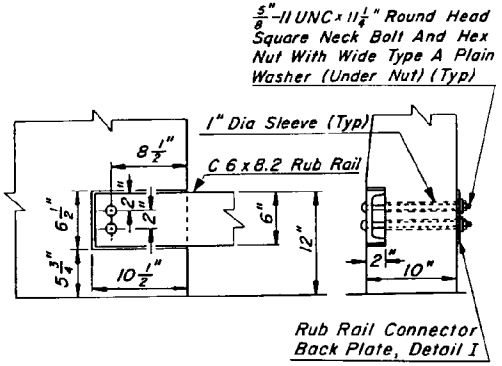

DETAIL D

RUB RAIL ANCHOR

DESIGN APPROVED W. A. Wakefield	STATE OF ARIZONA DEPARTMENT OF TRANSPORTATION DIVISION OF HIGHWAYS STANDARD DRAWINGS	REV. 3/87
APPROVED FOR DISTRIBUTION James A. Hancock	TRANSITION W BEAM (STEEL POST) TO CONCRETE HALF BARRIER	DRAWING NO. C-10.30 Sheet 3 of 5

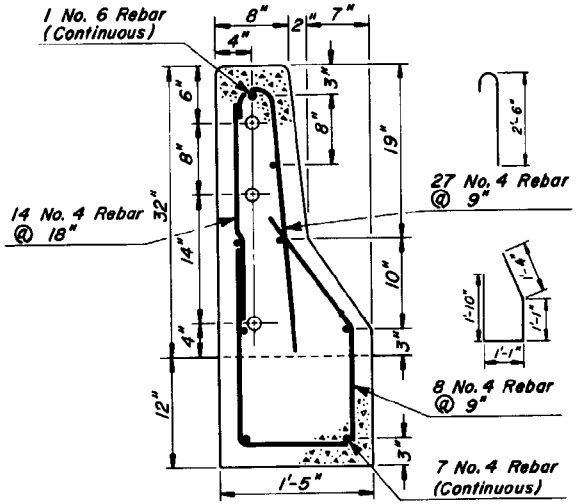

SECTION A-A

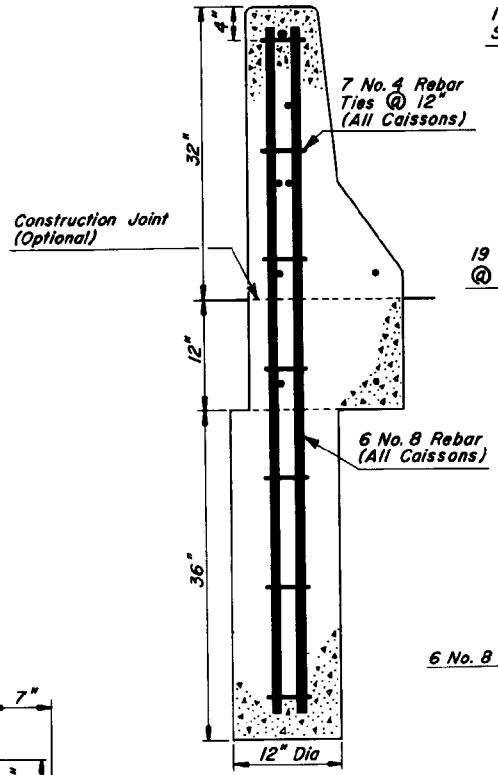

SECTION B-B

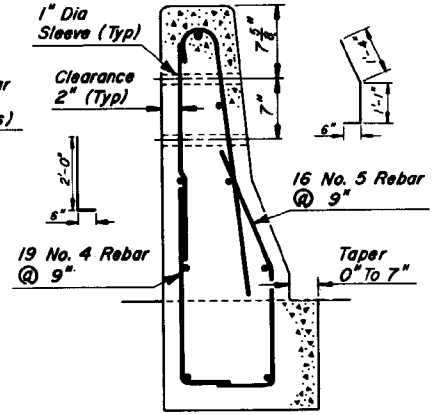

SECTION C-C

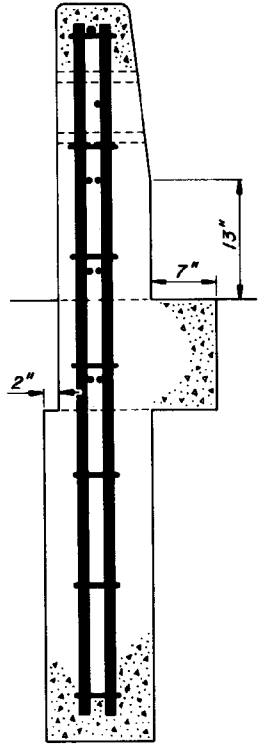

SECTION D-D

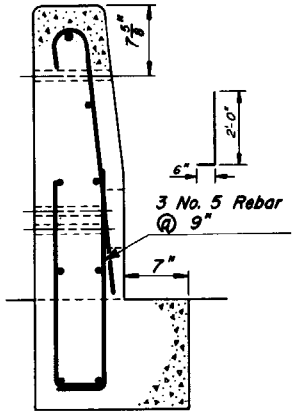

SECTION E-E

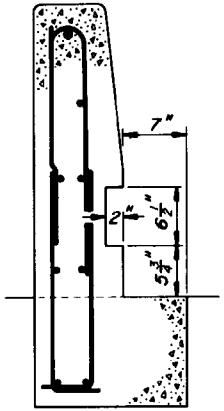

SECTION F-F

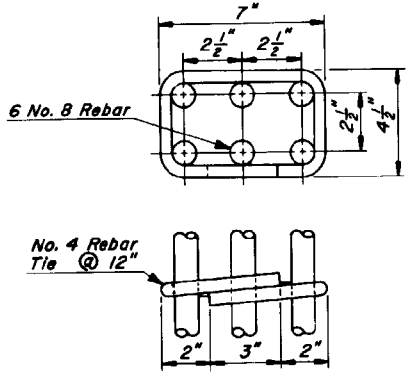

DETAIL E

CAISSON REINFORCEMENT

DESIGN APPROVED	STATE OF ARIZONA DEPARTMENT OF TRANSPORTATION DIVISION OF HIGHWAYS STANDARD DRAWINGS	REV. 7/85
APPROVED FOR DISTRIBUTION	TRANSITION W BEAM (STEEL POST) TO CONCRETE HALF BARRIER	DRAWING NO. C-10.30 Sheet 4 of 5

	DIMENSION	
BLOCK	A	B
1	0"	0"
2	$1\frac{1}{4}$"	$\frac{7}{8}$"
3	$2\frac{1}{2}$"	$1\frac{3}{4}$"
4	$3\frac{11}{16}$"	$2\frac{5}{8}$"
5	$4\frac{15}{16}$"	$3\frac{7}{16}$"

NOTE: Block 1 Is A $\frac{1}{4}$" x 12" x 14" Plate
Block 2 May Be A Solid 6" x 14" Plate Tapered In Thickness From $1\frac{1}{4}$" To $\frac{7}{8}$" Welded To $\frac{1}{4}$" x 12" x 14" Plate

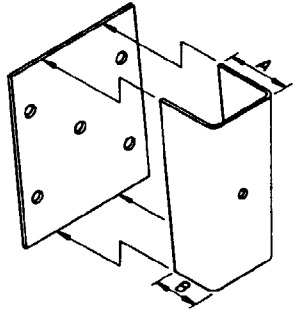

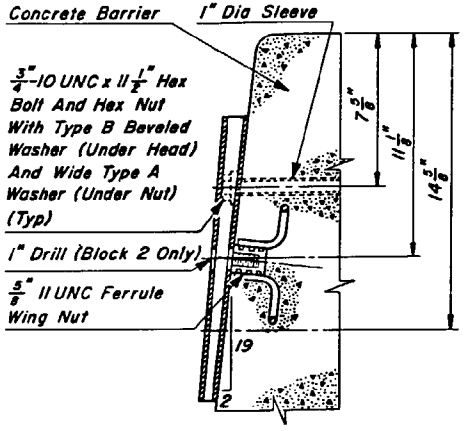

DETAIL F

SECTION THRU BLOCK AND ANCHORAGE

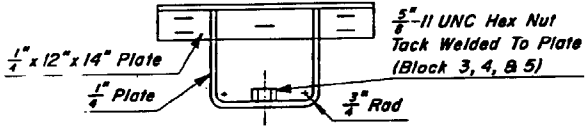

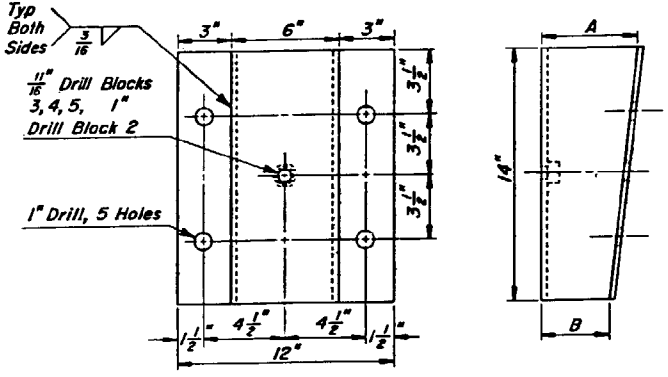

DETAIL G

BLOCK DETAILS

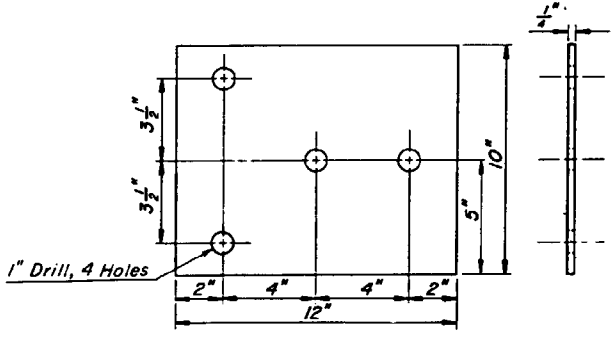

DETAIL H

TERMINAL CONNECTOR BACK PLATE

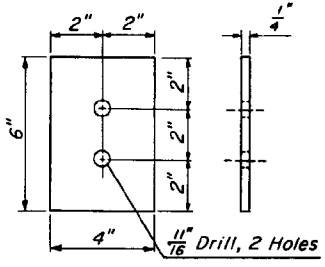

DETAIL I

RUB RAIL CONNECTOR BACK PLATE

DESIGN APPROVED [signature]	STATE OF ARIZONA DEPARTMENT OF TRANSPORTATION DIVISION OF HIGHWAYS STANDARD DRAWINGS	REV. 3/87
APPROVED FOR DISTRIBUTION [signature]	TRANSITION W BEAM (STEEL POST) TO CONCRETE HALF BARRIER	DRAWING NO. C-10.30 Sheet 5 of 5

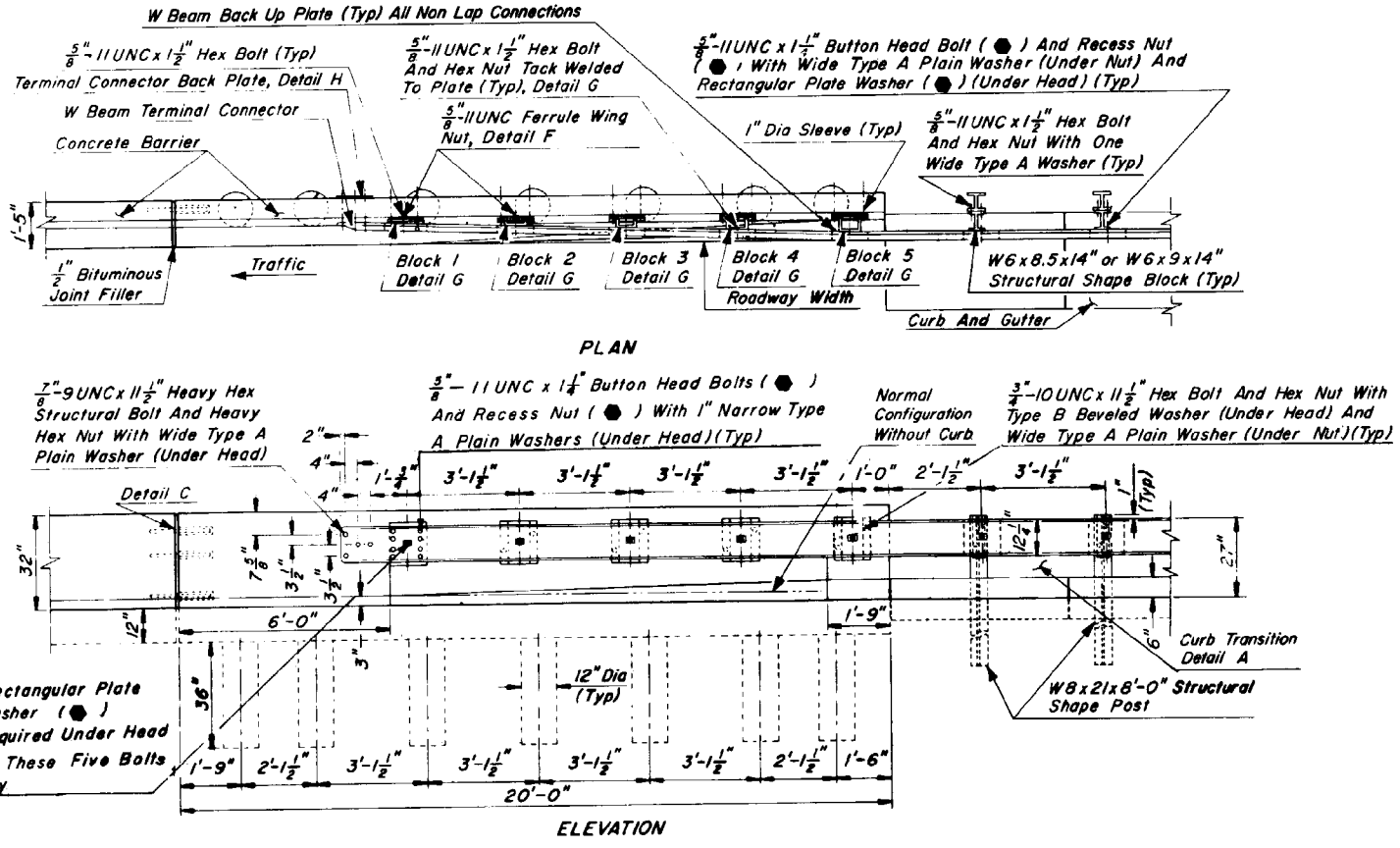

GENERAL NOTES

● - Indicates ARTBA designation.

DESIGN APPROVED	STATE OF ARIZONA DEPARTMENT OF TRANSPORTATION DIVISION OF HIGHWAYS STANDARD DRAWINGS	REV. 6/86
APPROVED FOR DISTRIBUTION	TRANSITION W BEAM (STEEL POST) TO CONCRETE HALF BARRIER, CURB INSTALLATION	DRAWING NO. C-10.35 Sheet 1 of 5

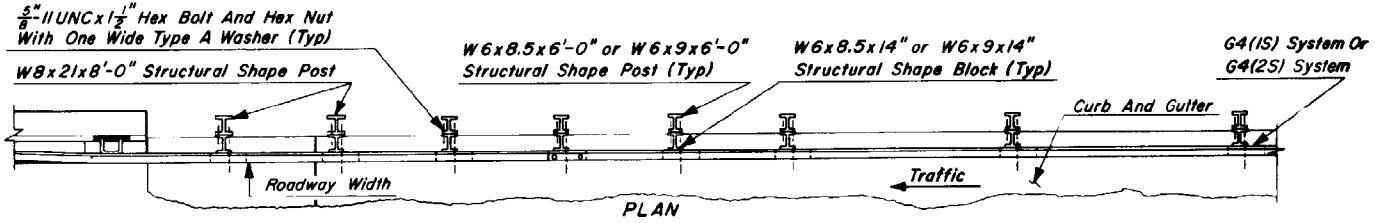

PLAN

GENERAL NOTES

⬢-Indicates ARTBA designation.

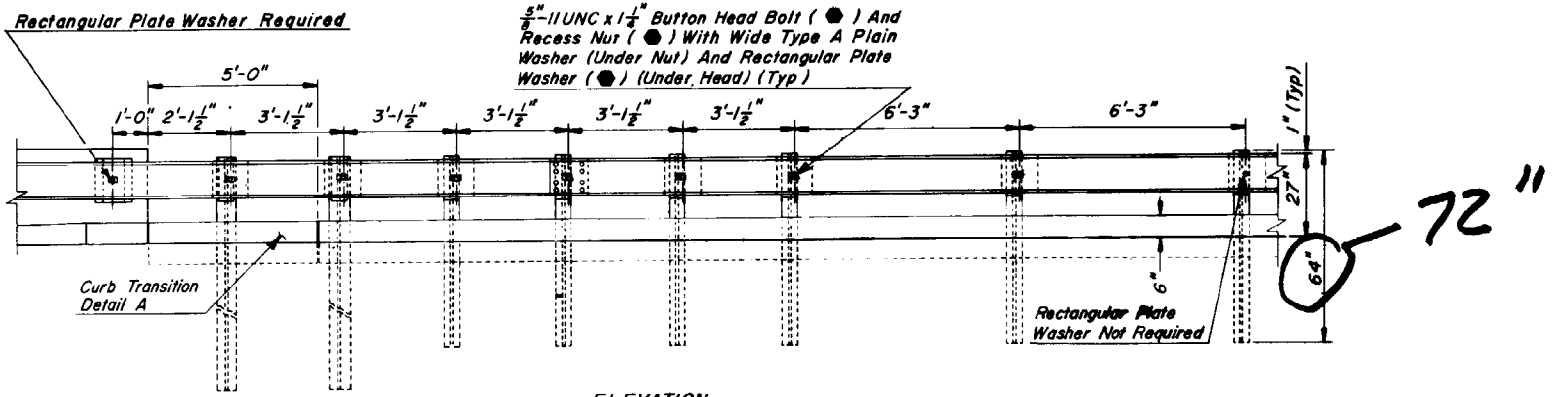

ELEVATION

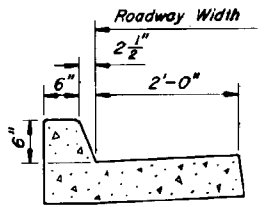

For Dimensions Not Shown
See Curb End Section

BARRIER END

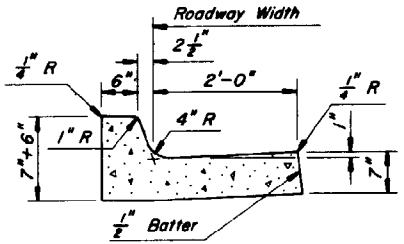

CURB END

CURB TRANSITION

DETAIL A

DESIGN APPROVED	STATE OF ARIZONA DEPARTMENT OF TRANSPORTATION DIVISION OF HIGHWAYS STANDARD DRAWINGS	REV. 6/86
APPROVED FOR DISTRIBUTION	TRANSITION W BEAM (STEEL POST) TO CONCRETE HALF BARRIER, CURB INSTALLATION	DRAWING NO. C-10.35 Sheet 2 of 5

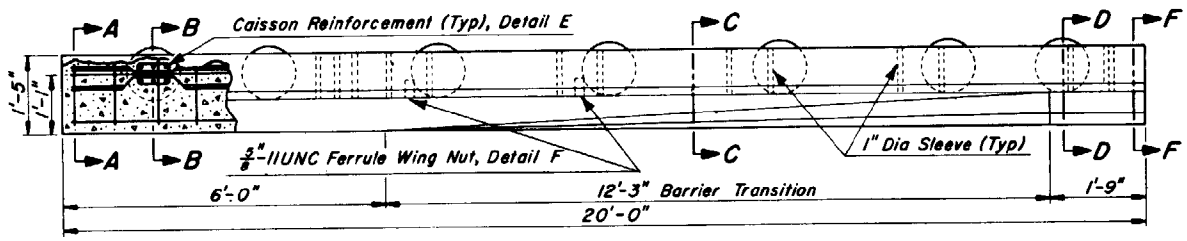

PLAN

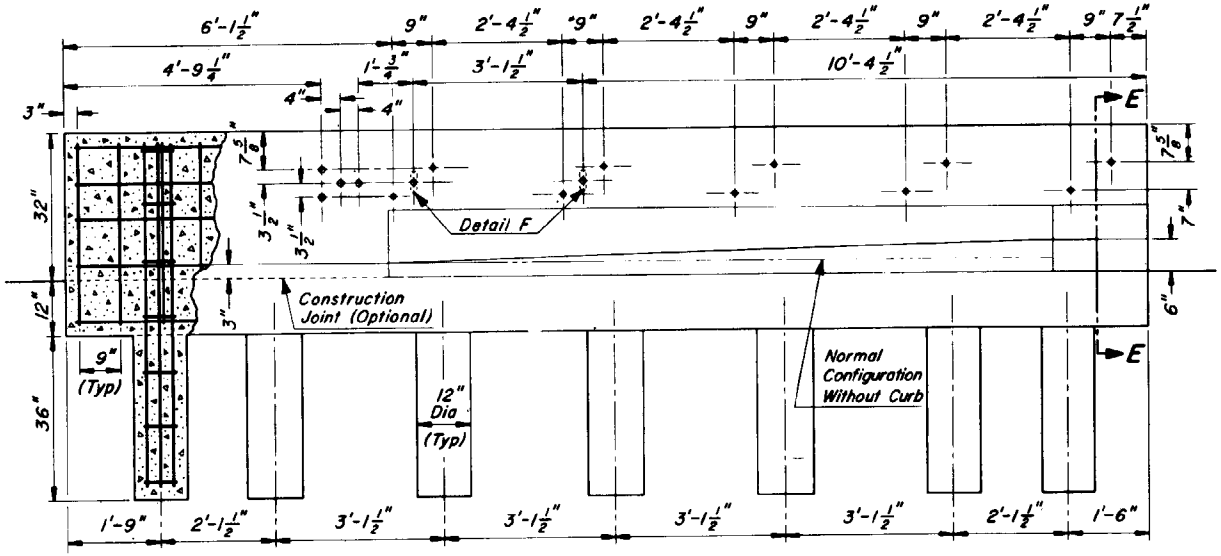

ELEVATION

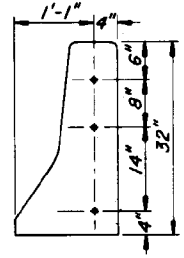

DOWEL LOCATIONS

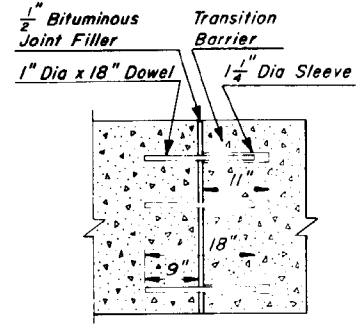

JOINT ASSEMBLY

DETAIL C

DOWEL INSTALLATION AND CONSTRUCTION JOINT

DESIGN APPROVED	STATE OF ARIZONA DEPARTMENT OF TRANSPORTATION DIVISION OF HIGHWAYS STANDARD DRAWINGS	REV. 6/86
APPROVED FOR DISTRIBUTION	TRANSITION W BEAM (STEEL POST) TO CONCRETE HALF BARRIER, CURB INSTALLATION	DRAWING NO. C-10.35 Sheet 3 of 5

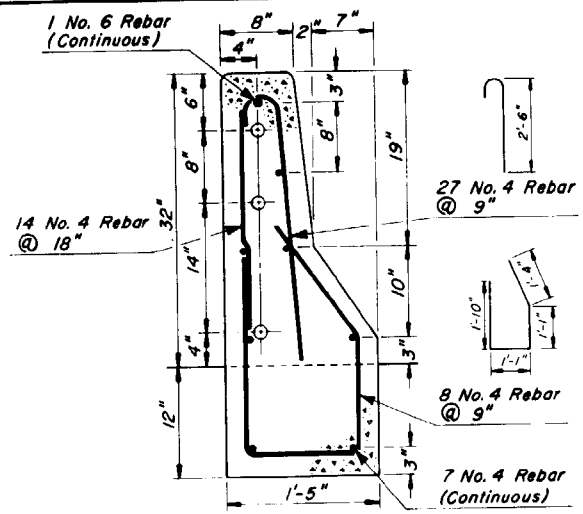

SECTION A-A

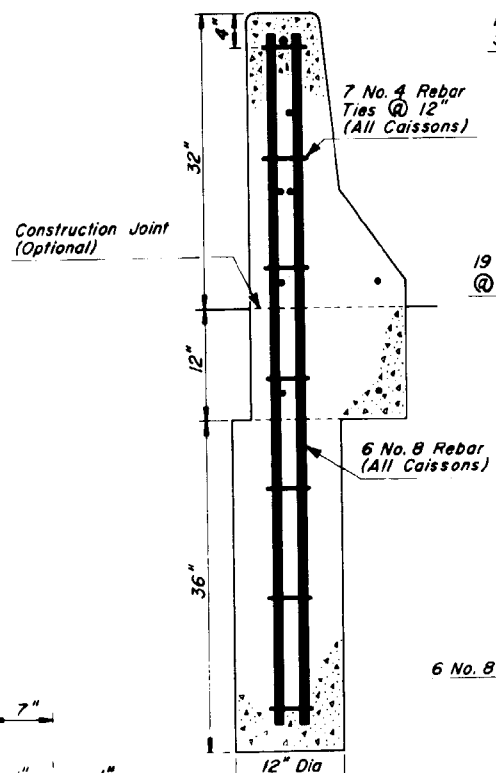

SECTION B-B

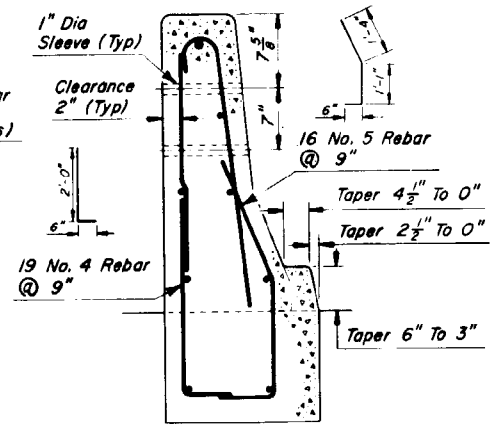

SECTION C-C

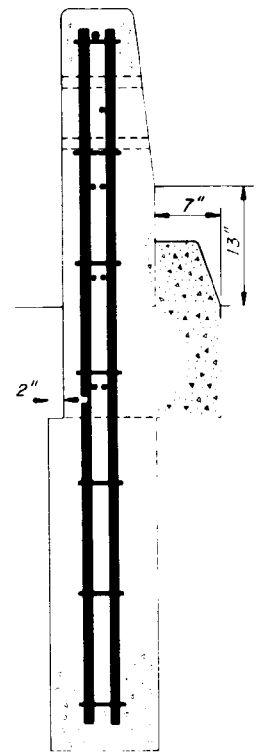

SECTION D-D

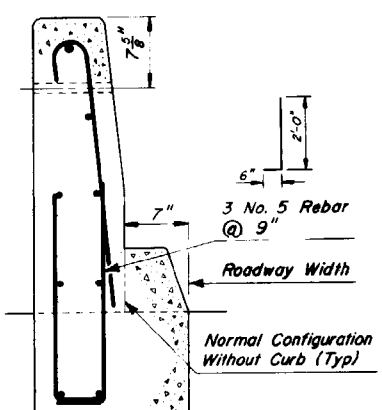

SECTION E-E

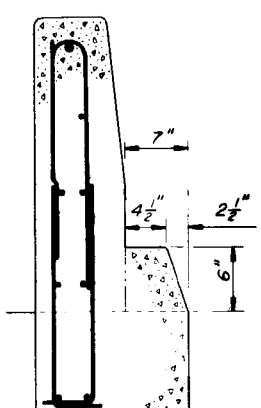

SECTION F-F

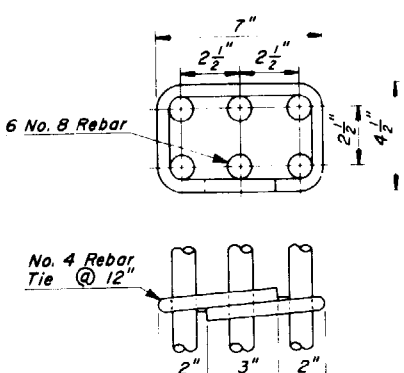

DETAIL E

CAISSON REINFORCEMENT

DESIGN APPROVED	STATE OF ARIZONA DEPARTMENT OF TRANSPORTATION DIVISION OF HIGHWAYS STANDARD DRAWINGS	REV. 7/85
APPROVED FOR DISTRIBUTION	TRANSITION W BEAM (STEEL POST) TO CONCRETE HALF BARRIER, CURB INSTALLATION	DRAWING NO. C-10.35 Sheet 4 of 5

	DIMENSION	
BLOCK	A	B
1	0"	0"
2	$1\frac{1}{4}$"	$\frac{7}{8}$"
3	$2\frac{1}{2}$"	$1\frac{3}{4}$"
4	$3\frac{11}{16}$"	$2\frac{5}{8}$"
5	$4\frac{15}{16}$"	$3\frac{7}{16}$"

NOTE: Block 1 Is A $\frac{1}{4}$" x 12" x 14" Plate
Block 2 May Be A Solid 6" x 14" Plate Tapered In Thickness From $1\frac{1}{4}$" To $\frac{7}{8}$" Welded To $\frac{1}{4}$" x 12" x 14" Plate

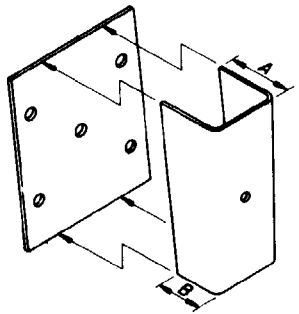

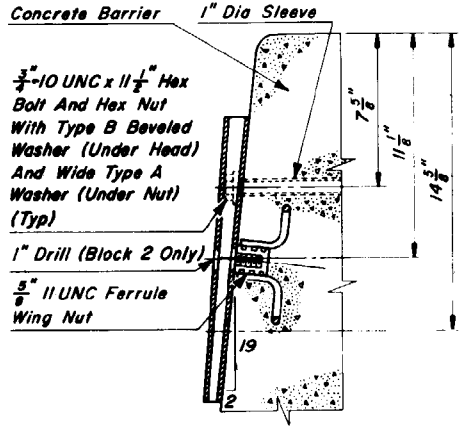

DETAIL F
SECTION THRU BLOCK AND ANCHORAGE

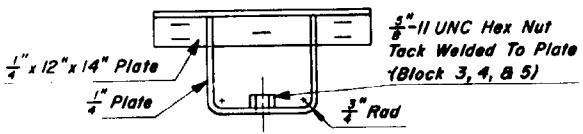

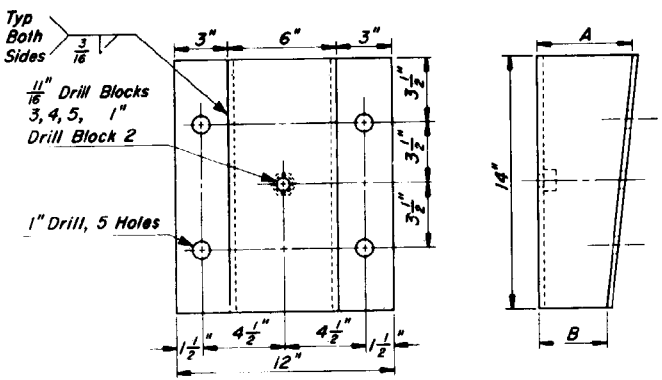

DETAIL G
BLOCK DETAILS

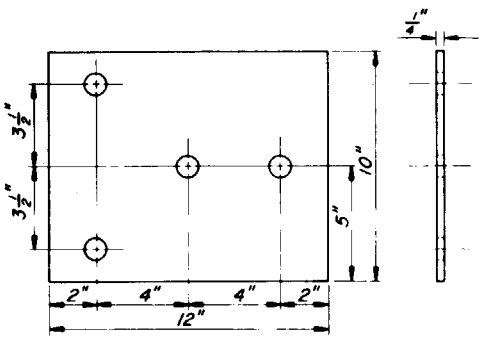

DETAIL H
TERMINAL CONNECTOR BACK PLATE

DESIGN APPROVED	STATE OF ARIZONA DEPARTMENT OF TRANSPORTATION DIVISION OF HIGHWAYS STANDARD DRAWINGS	REV. 7/85
APPROVED FOR DISTRIBUTION	TRANSITION W BEAM (STEEL POST) TO CONCRETE HALF BARRIER, CURB INSTALLATION	DRAWING NO. C-10.35 Sheet 5 of 5

GENERAL NOTES

⬢-Indicates ARTBA designation.

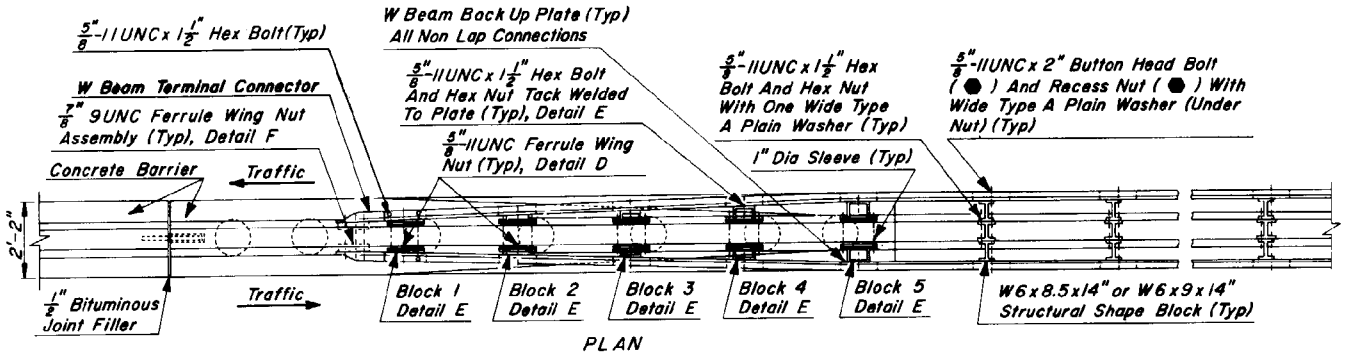

PLAN

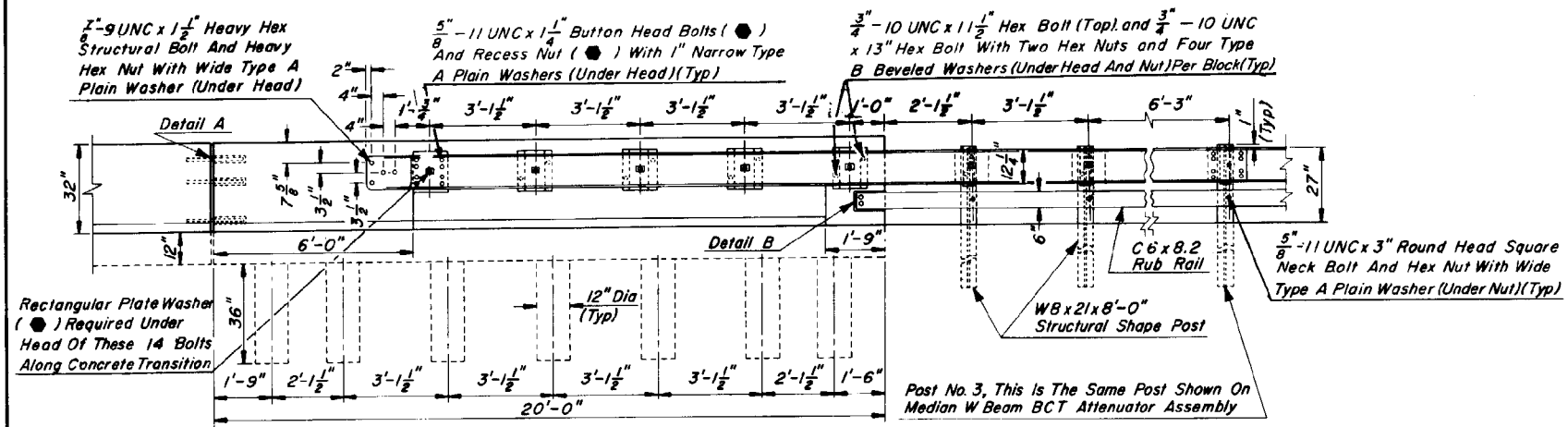

ELEVATION

DESIGN APPROVED	STATE OF ARIZONA DEPARTMENT OF TRANSPORTATION DIVISION OF HIGHWAYS STANDARD DRAWINGS	REV. 6/86
APPROVED FOR DISTRIBUTION	TRANSITION W BEAM TO CONCRETE MEDIAN BARRIER	DRAWING NO. C-10.40 Sheet 1 of 4

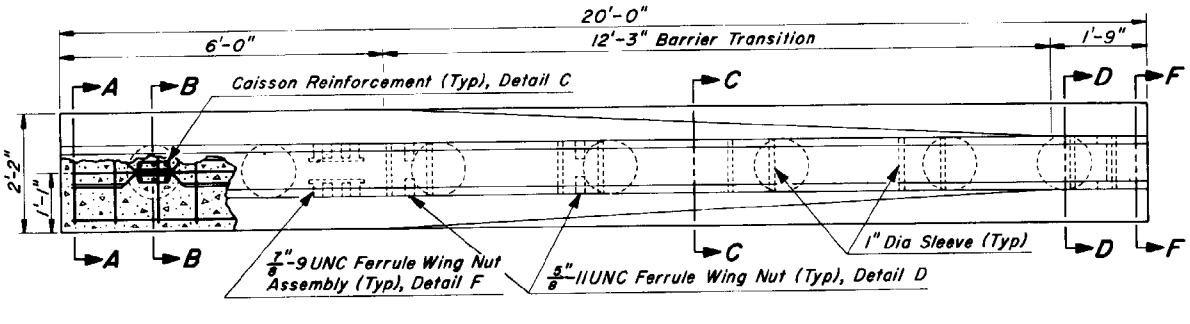

PLAN

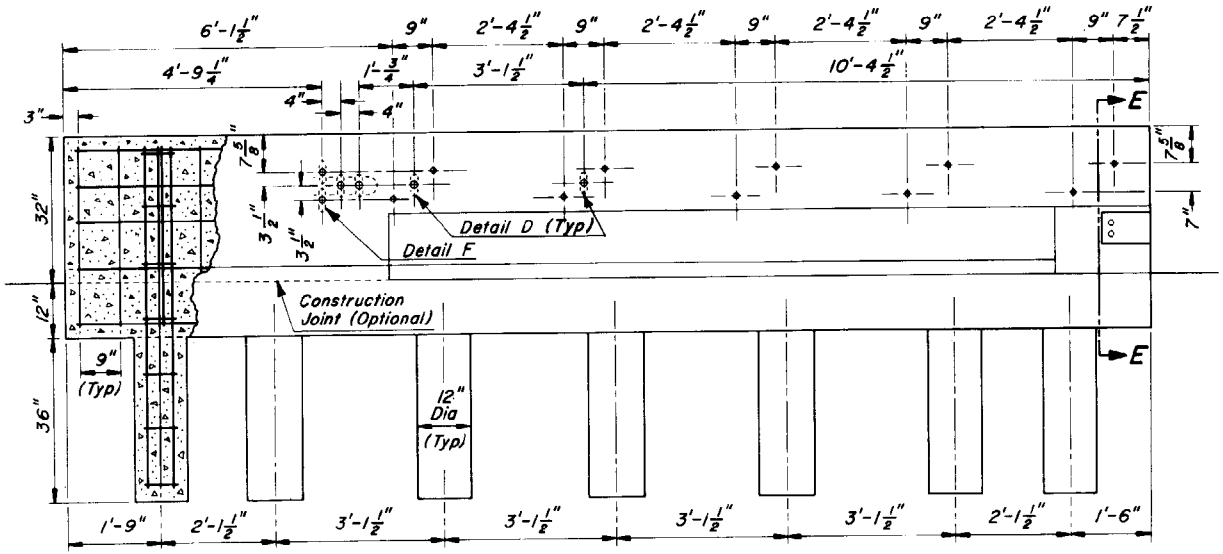

ELEVATION

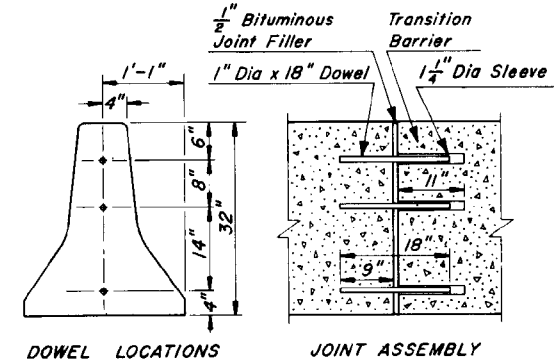

DETAIL A

DOWEL INSTALLATION AND CONSTRUCTION JOINT

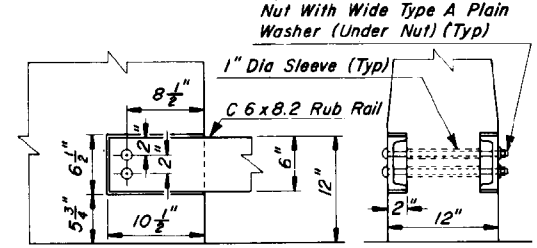

DETAIL B

RUB RAIL ANCHOR

DESIGN APPROVED	STATE OF ARIZONA DEPARTMENT OF TRANSPORTATION DIVISION OF HIGHWAYS STANDARD DRAWINGS	REV. 6/86
APPROVED FOR DISTRIBUTION	TRANSITION W BEAM TO CONCRETE MEDIAN BARRIER	DRAWING NO. C-10.40 Sheet 2 of 4

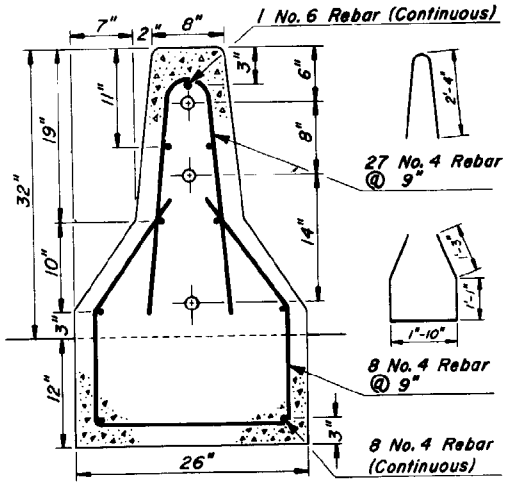

SECTION A-A

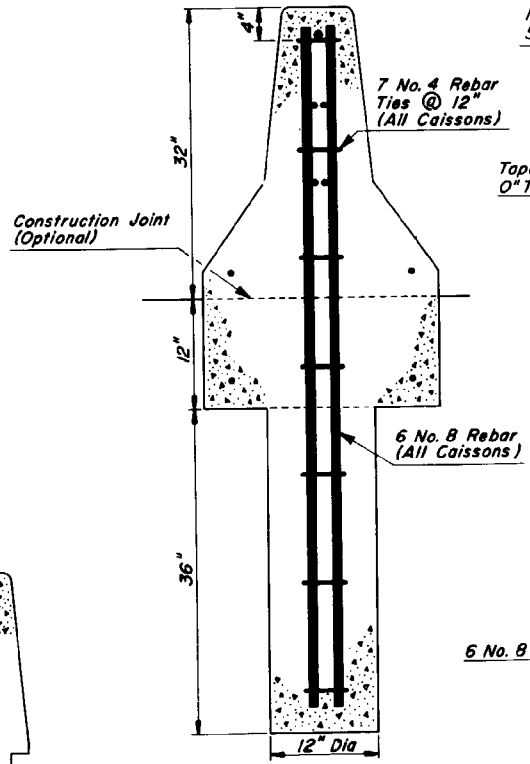

SECTION B-B

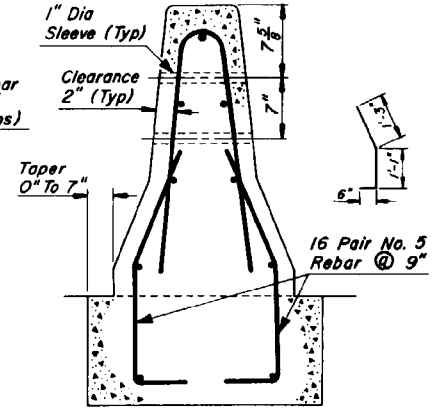

SECTION C-C

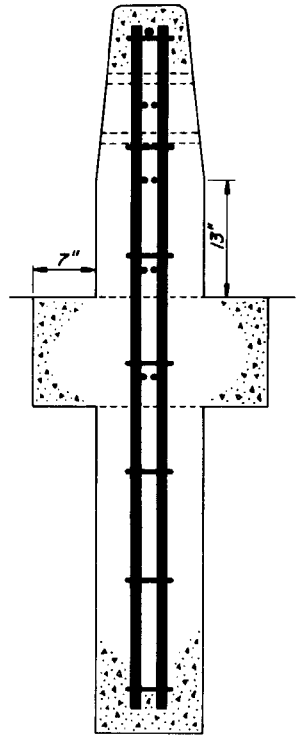

SECTION D-D

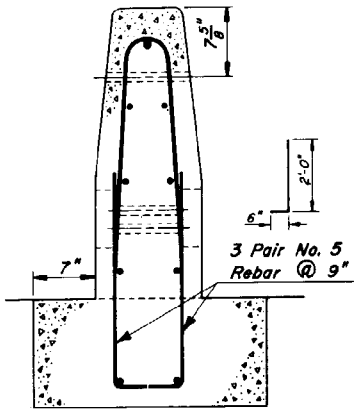

SECTION E-E

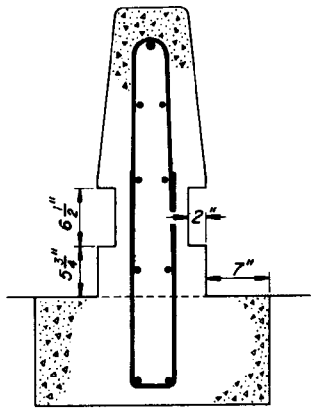

SECTION F-F

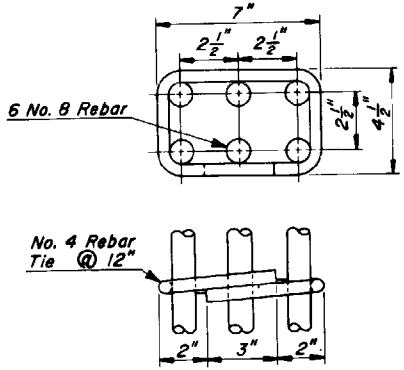

DETAIL C

CAISSON REINFORCEMENT

DESIGN APPROVED	STATE OF ARIZONA DEPARTMENT OF TRANSPORTATION DIVISION OF HIGHWAYS STANDARD DRAWINGS	REV. 7/85
APPROVED FOR DISTRIBUTION	TRANSITION W BEAM TO CONCRETE MEDIAN BARRIER	DRAWING NO. C-10.40 Sheet 3 of 4

	DIMENSION	
BLOCK	A	B
1	0"	0"
2	$1\frac{1}{4}$"	$\frac{7}{8}$"
3	$2\frac{1}{2}$"	$1\frac{3}{4}$"
4	$3\frac{11}{16}$"	$2\frac{5}{8}$"
5	$4\frac{15}{16}$"	$3\frac{7}{16}$"

NOTE: Block 1 Is A $\frac{1}{4}$" x 12" x 14" Plate
Block 2 May Be A Solid 6" x 14" Plate Tapered In Thickness From $1\frac{1}{4}$" To $\frac{7}{8}$" Welded To $\frac{1}{4}$" x 12" x 14" Plate

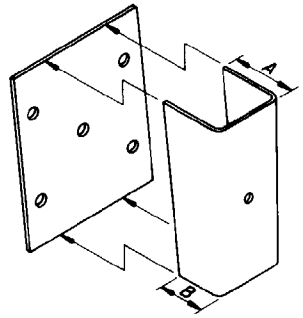

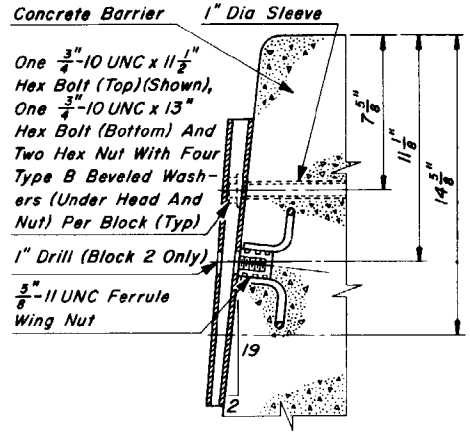

DETAIL D
SECTION THRU BLOCK AND ANCHORAGE

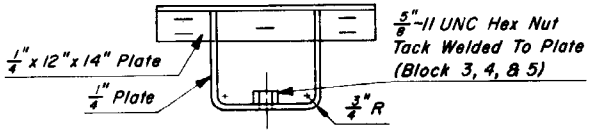

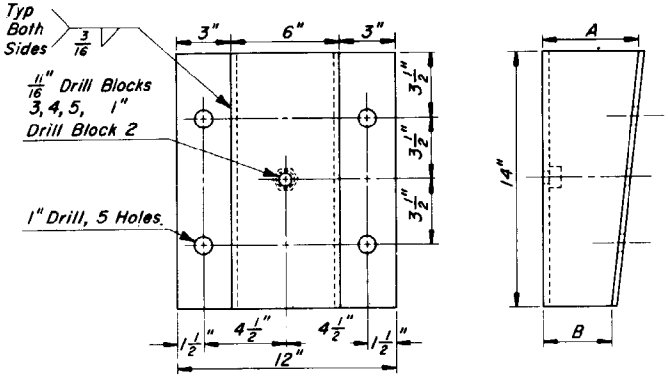

DETAIL E
BLOCK DETAILS

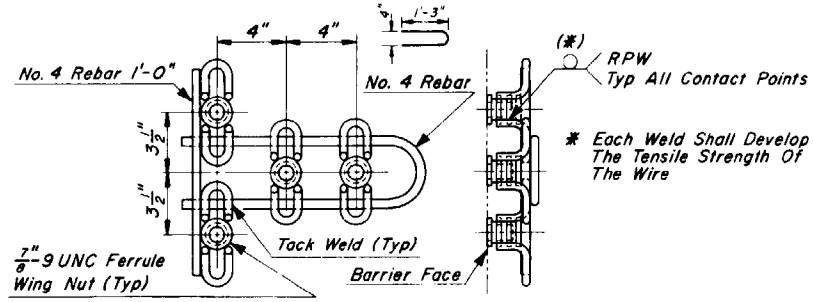

* Each Weld Shall Develop The Tensile Strength Of The Wire

DETAIL F
TERMINAL CONNECTOR ANCHOR

DESIGN APPROVED	STATE OF ARIZONA DEPARTMENT OF TRANSPORTATION DIVISION OF HIGHWAYS STANDARD DRAWINGS	REV. 7/85
APPROVED FOR DISTRIBUTION	TRANSITION W BEAM TO CONCRETE MEDIAN BARRIER	DRAWING NO. C-10.40 Sheet 4 of 4

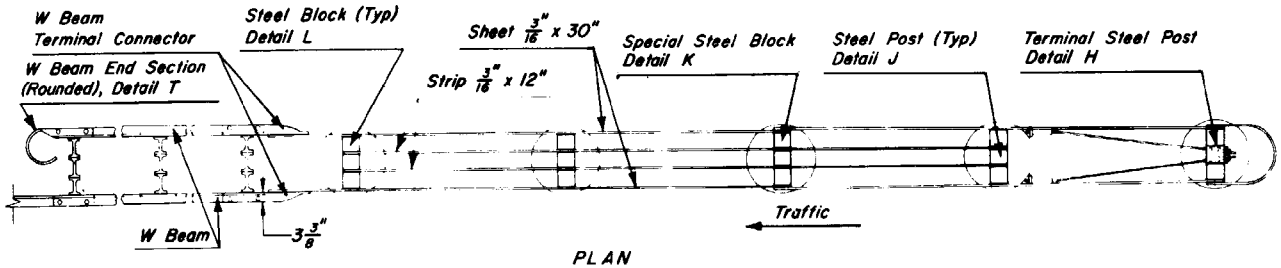

PLAN

GENERAL NOTES

● - Indicates ARTBA designation.

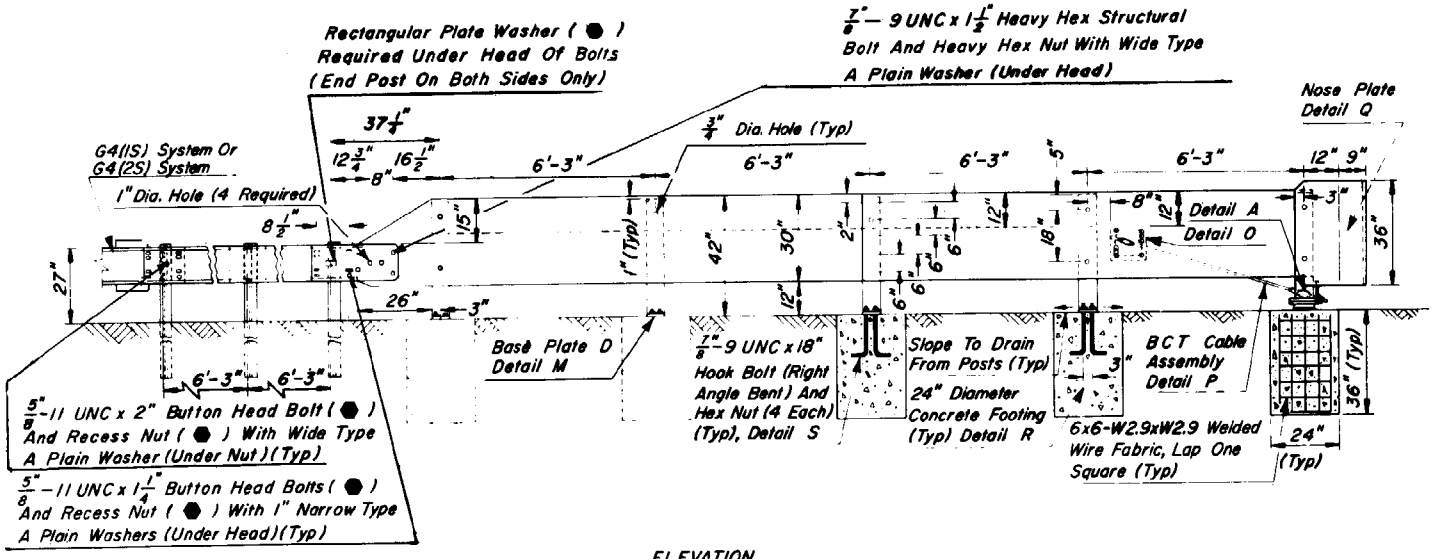

ELEVATION

ONE WAY TRAFFIC - RIGHT SIDE OF ROADWAY
OR TWO WAY TRAFFIC

DESIGN APPROVED	STATE OF ARIZONA DEPARTMENT OF TRANSPORTATION DIVISION OF HIGHWAYS STANDARD DRAWINGS	REV. 7/85
APPROVED FOR DISTRIBUTION	W BEAM BCT ATTENUATOR ASSEMBLY	DRAWING NO. C-10.45 Sheet 1 of 5

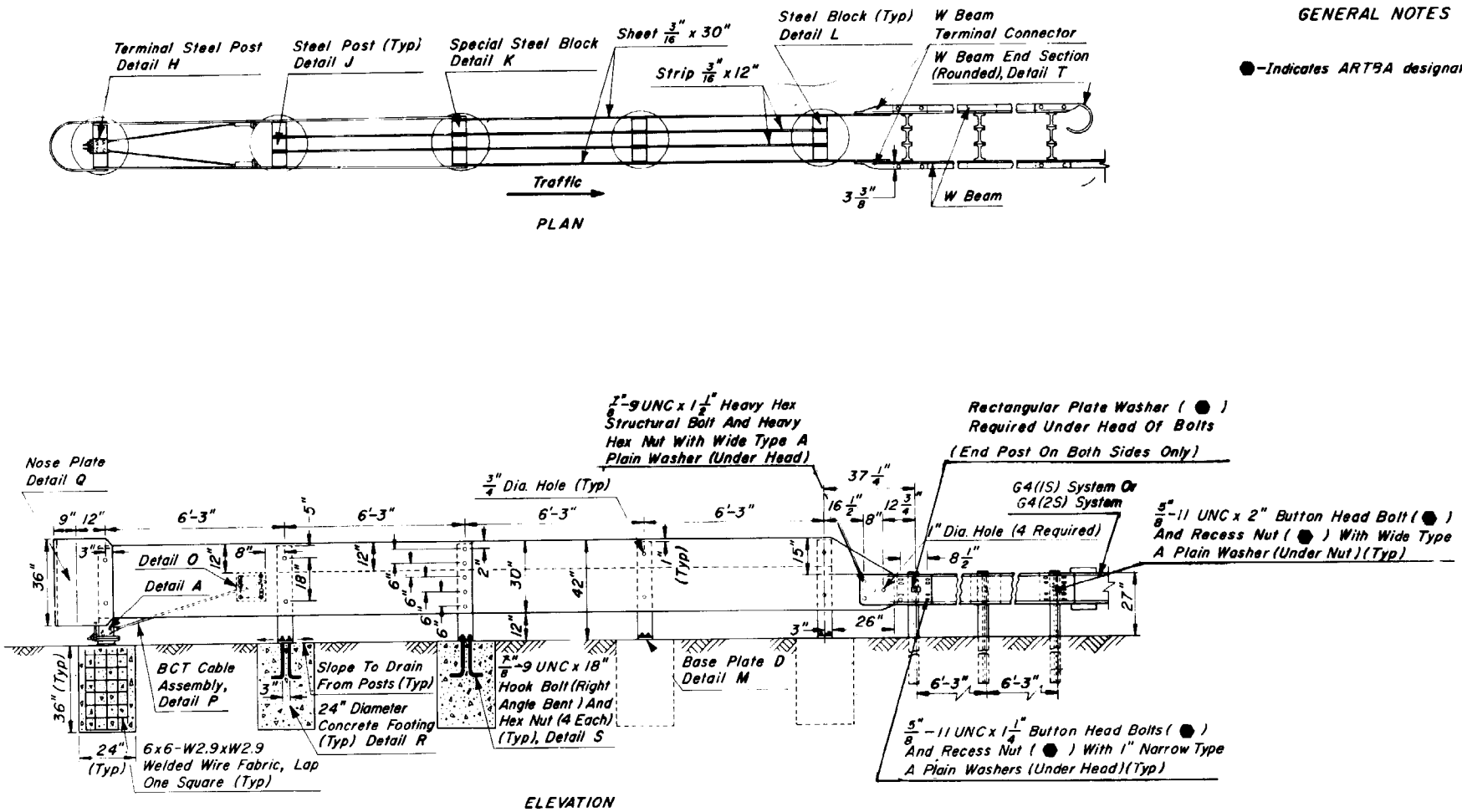

ONE WAY TRAFFIC-LEFT SIDE OF ROADWAY

GENERAL NOTES

● -Indicates ARTBA designation

DESIGN APPROVED	STATE OF ARIZONA DEPARTMENT OF TRANSPORTATION DIVISION OF HIGHWAYS STANDARD DRAWINGS	REV. 7/85
APPROVED FOR DISTRIBUTION	W BEAM BCT ATTENUATOR ASSEMBLY	DRAWING NO. C-10.45 Sheet 2 of 5

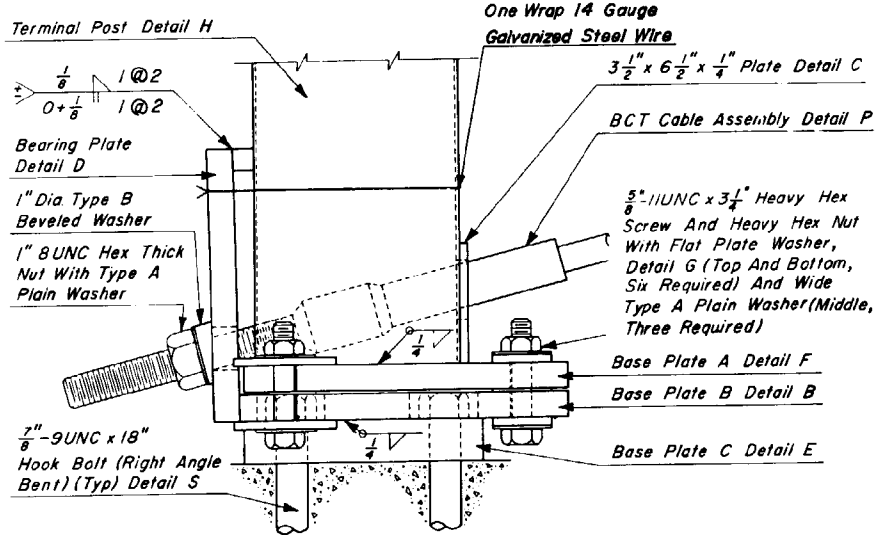

DETAIL A

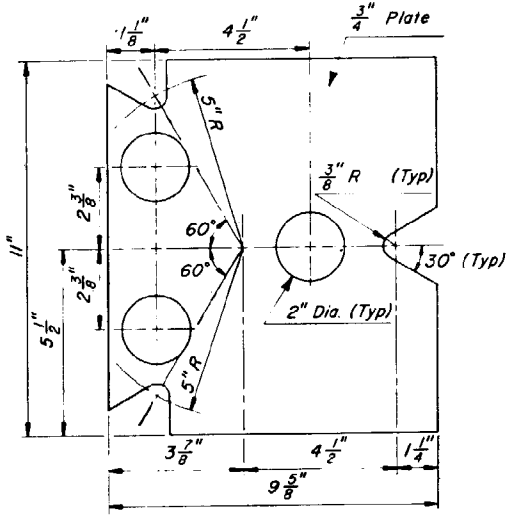

DETAIL B (BASE PLATE B)

GENERAL NOTES

1. BCT Cable Assembly shall be tightened to remove slack.
2. 5/8"-11UNC x 3 1/4" Heavy Hex Screw, connecting Base Plate A to Base Plate B, shall be torqued to 170 ft. lbs.
3. To ensure that the BCT (Steel) Bearing Plate remains in position one wrap of 14 Gauge Galvanized Steel Wire shall be wrapped around the BCT Terminal Post (Steel) and near the top of the plate.

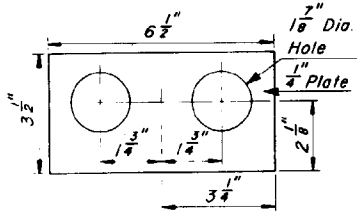

DETAIL C

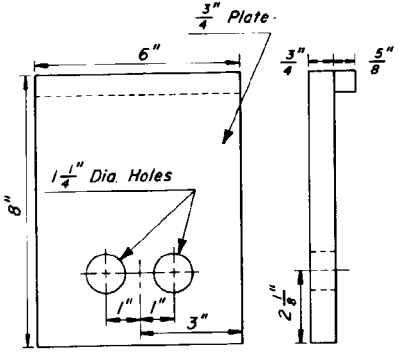

DETAIL D
(BEARING PLATE)

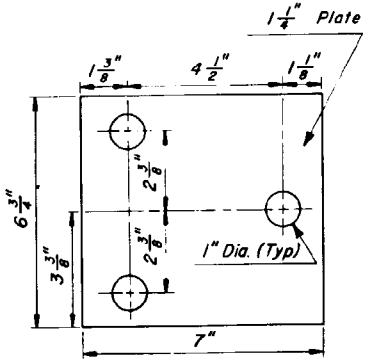

DETAIL E
(BASE PLATE C)

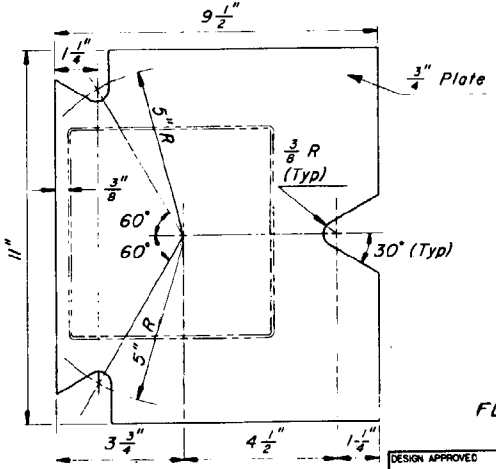

DETAIL F (BASE PLATE A)

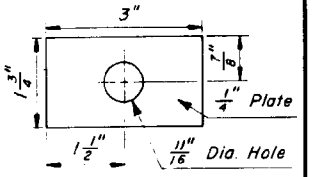

DETAIL G
FLAT PLATE WASHER

DESIGN APPROVED	STATE OF ARIZONA DEPARTMENT OF TRANSPORTATION DIVISION OF HIGHWAYS STANDARD DRAWINGS	REV. 6/86
APPROVED FOR DISTRIBUTION	W BEAM BCT ATTENUATOR ASSEMBLY	DRAWING NO. C-10.45 Sheet 3 of 5

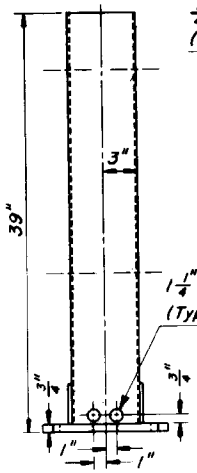

LEFT SIDE VIEW

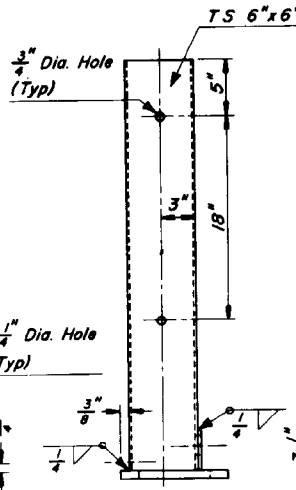

FRONT VIEW

DETAIL H
(TERMINAL STEEL POST)

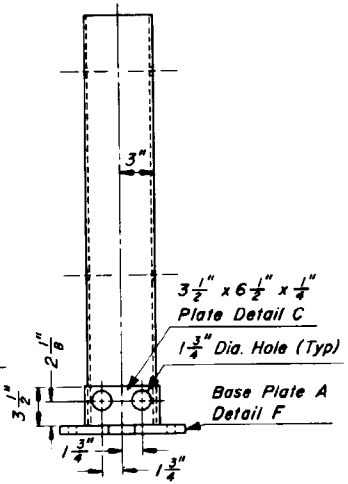

RIGHT SIDE VIEW

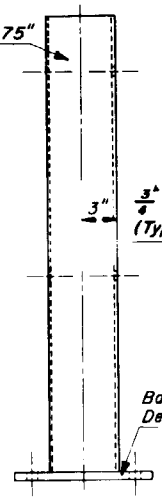

SIDE VIEW

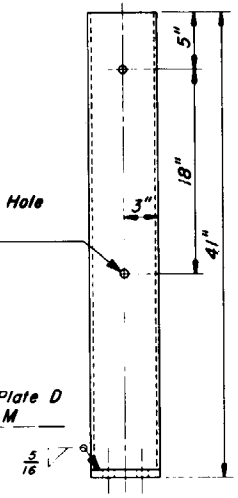

FRONT VIEW

DETAIL J
(STEEL POST)

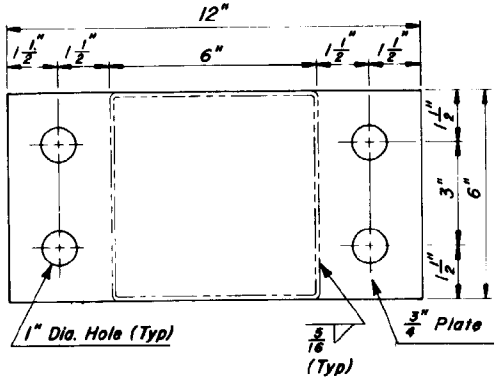

DETAIL M
(BASE PLATE D)

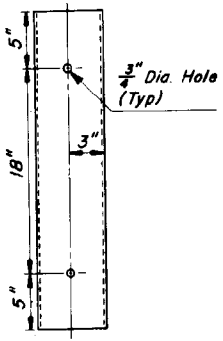

REAR VIEW
(POST SIDE)

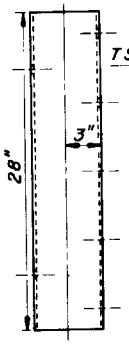

SIDE VIEW

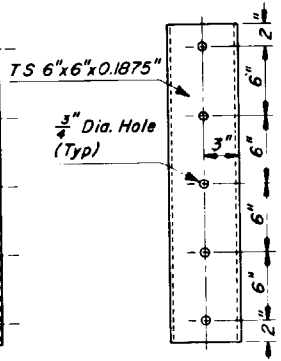

FRONT VIEW
(OUTER SIDE)

DETAIL K
(SPECIAL STEEL BLOCK)

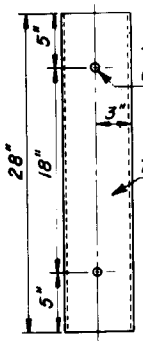

FRONT VIEW

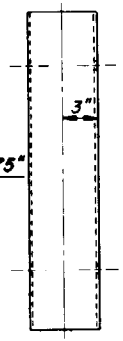

SIDE VIEW

DETAIL L
(STEEL BLOCK)

DESIGN APPROVED	STATE OF ARIZONA DEPARTMENT OF TRANSPORTATION DIVISION OF HIGHWAYS STANDARD DRAWINGS	REV. 7/85
APPROVED FOR DISTRIBUTION	W BEAM BCT ATTENUATOR ASSEMBLY	DRAWING NO. C-10.45 Sheet 4 of 5

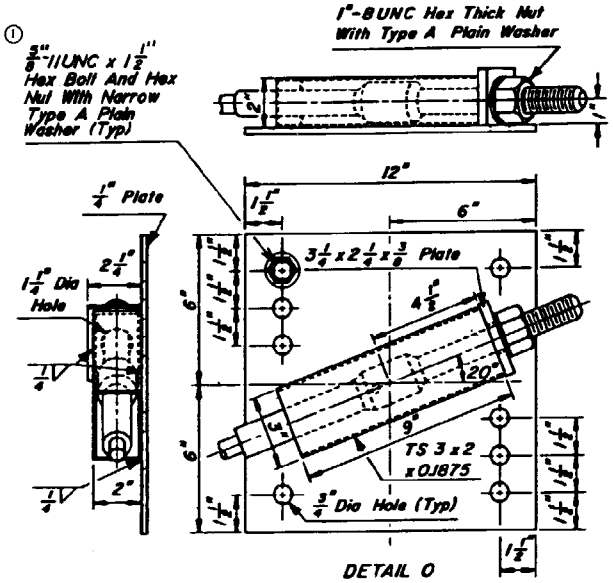

DETAIL O
(BCT PLATE ASSEMBLY)

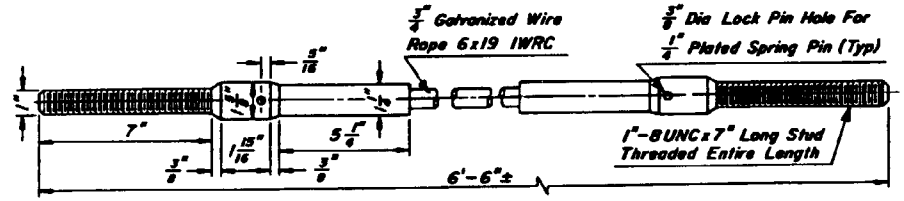

DETAIL P
(BCT CABLE ASSEMBLY)

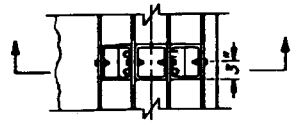

PLAN

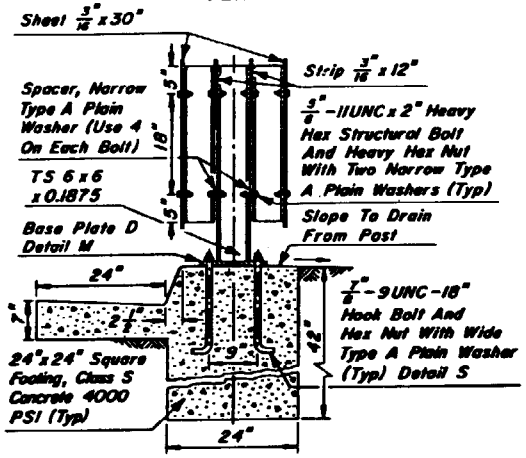

SECTION

DETAIL R
(POST AND BLOCK ATTACHMENT)

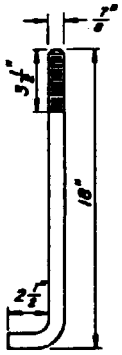

DETAIL S
7/8"-9UNC-18"
HOOK BOLT
(RIGHT ANGLE BENT)

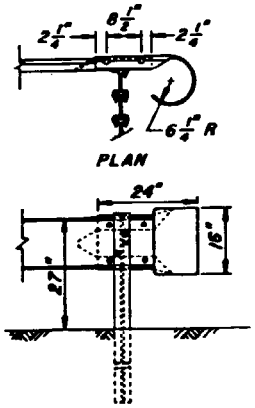

PLAN

ELEVATION

DETAIL T
(W BEAM ROUNDED END SECTION)

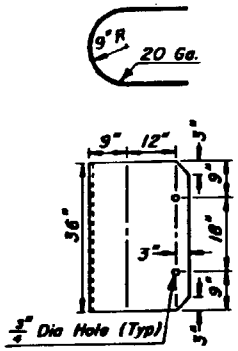

DETAIL Q
(NOSE PLATE)

REDUCED SIZE
DO NOT SCALE

DESIGN APPROVED	STATE OF ARIZONA DEPARTMENT OF TRANSPORTATION DIVISION OF HIGHWAYS STANDARD DRAWINGS	REV. 5-89
APPROVED FOR DISTRIBUTION	W BEAM BCT ATTENUATOR ASSEMBLY	DRAWING NO. C-10.45 Sheet 5 of 5

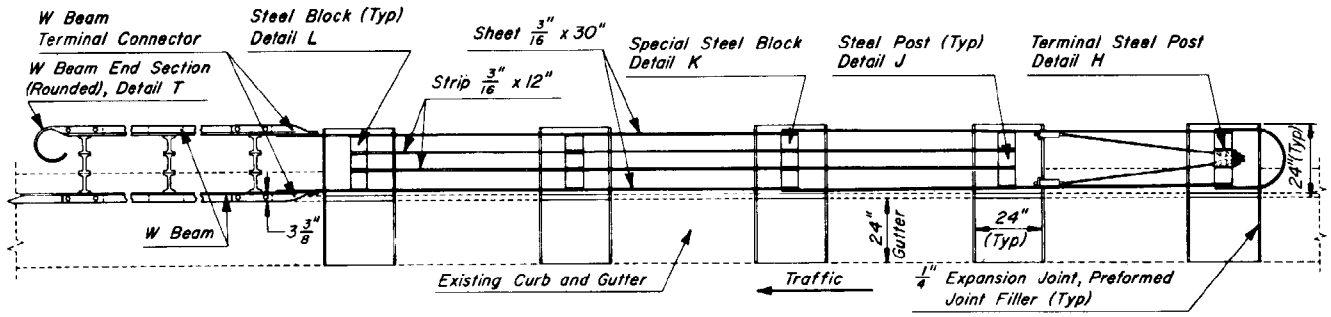

PLAN

GENERAL NOTES

●-Indicates ARTBA designation.

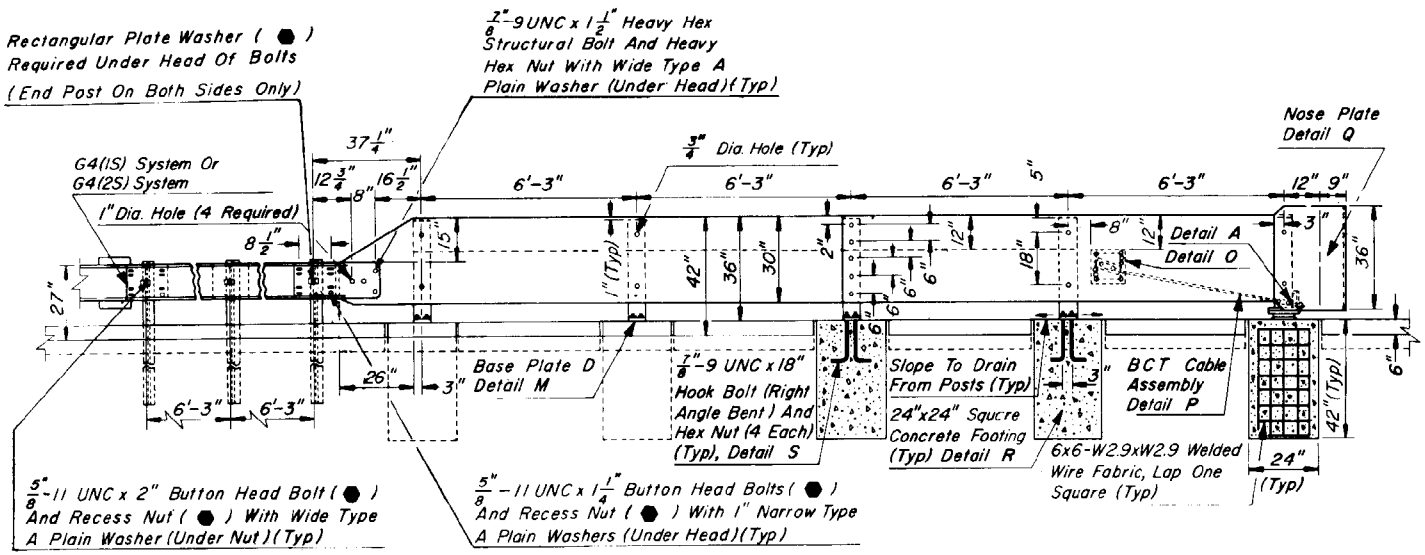

ELEVATION

ONE WAY TRAFFIC-RIGHT SIDE OF ROADWAY
OR TWO WAY TRAFFIC

DESIGN APPROVED	STATE OF ARIZONA DEPARTMENT OF TRANSPORTATION DIVISION OF HIGHWAYS STANDARD DRAWINGS	REV. 7/85
APPROVED FOR DISTRIBUTION	W BEAM BCT ATTENUATOR ASSEMBLY, CURB INSTALLATION	DRAWING NO. C-10.50 Sheet 1 of 5

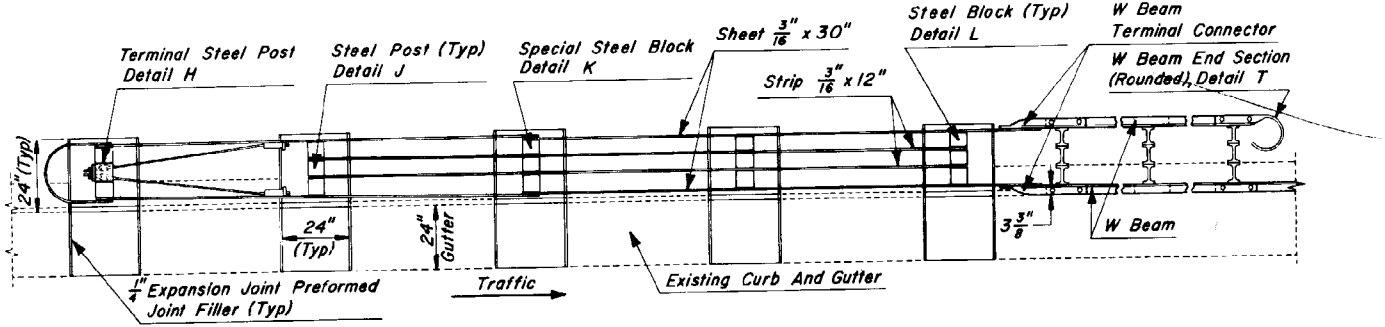

PLAN

GENERAL NOTES

●–Indicates ARTBA designation.

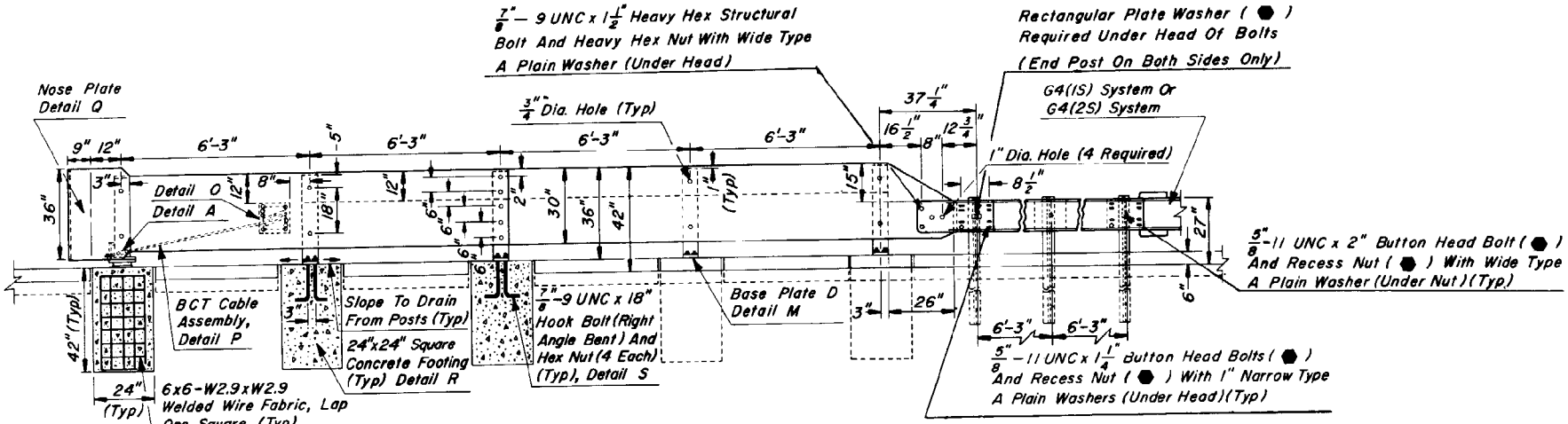

ELEVATION

ONE WAY TRAFFIC–LEFT SIDE OF ROADWAY

DESIGN APPROVED	STATE OF ARIZONA DEPARTMENT OF TRANSPORTATION DIVISION OF HIGHWAYS STANDARD DRAWINGS	REV. 6/86
APPROVED FOR DISTRIBUTION	W BEAM BCT ATTENUATOR ASSEMBLY, CURB INSTALLATION	DRAWING NO. C-10.50 Sheet 2 of 5

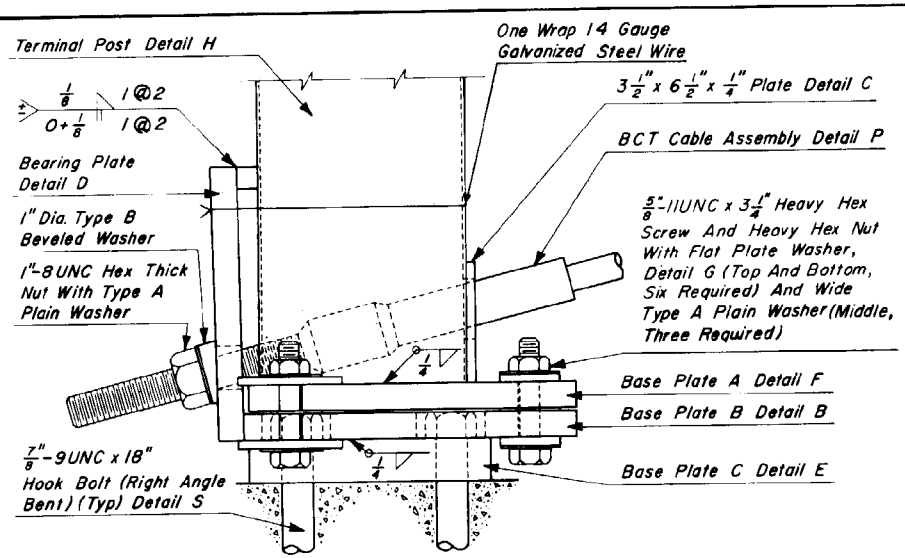

DETAIL A

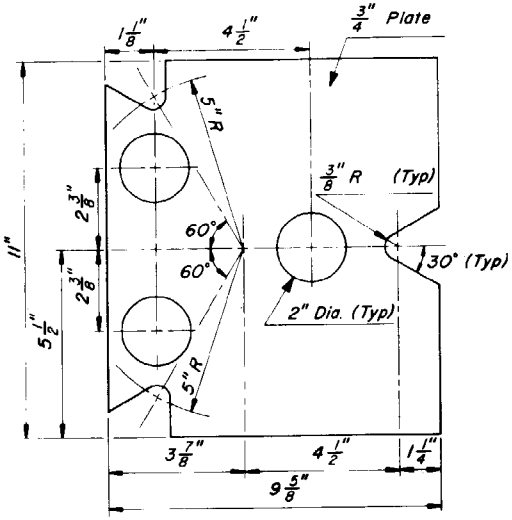

DETAIL B (BASE PLATE B)

GENERAL NOTES

1. BCT Cable Assembly shall be tightened to remove slack.
2. 5/8"-11UNC x 3 1/4" Heavy Hex Screw, connecting Base Plate A to Base Plate B, shall be torqued to 170 ft. lbs.
3. To ensure that the BCT (Steel) Bearing Plate remains in position one wrap of 14 Gauge Galvanized Steel Wire shall be wrapped around the BCT Terminal Post (Steel) and near the top of the plate.

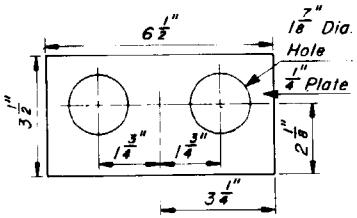

DETAIL C

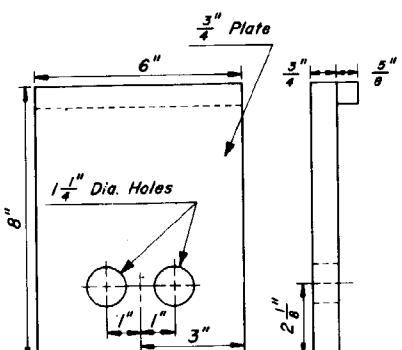

DETAIL D
(BEARING PLATE)

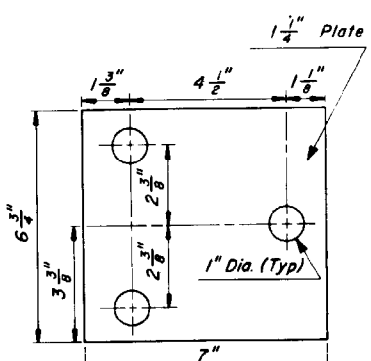

DETAIL E
(BASE PLATE C)

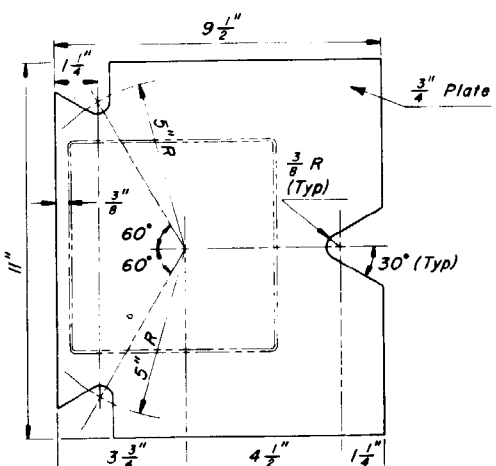

DETAIL F (BASE PLATE A)

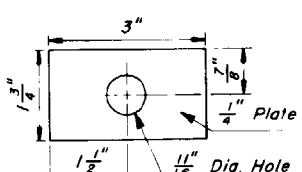

DETAIL G
FLAT PLATE WASHER

DESIGN APPROVED	STATE OF ARIZONA DEPARTMENT OF TRANSPORTATION DIVISION OF HIGHWAYS STANDARD DRAWINGS	REV. 6/86
APPROVED FOR DISTRIBUTION	W BEAM BCT ATTENUATOR ASSEMBLY CURB INSTALLATION	DRAWING NO. C-10.50 Sheet 3 of 5

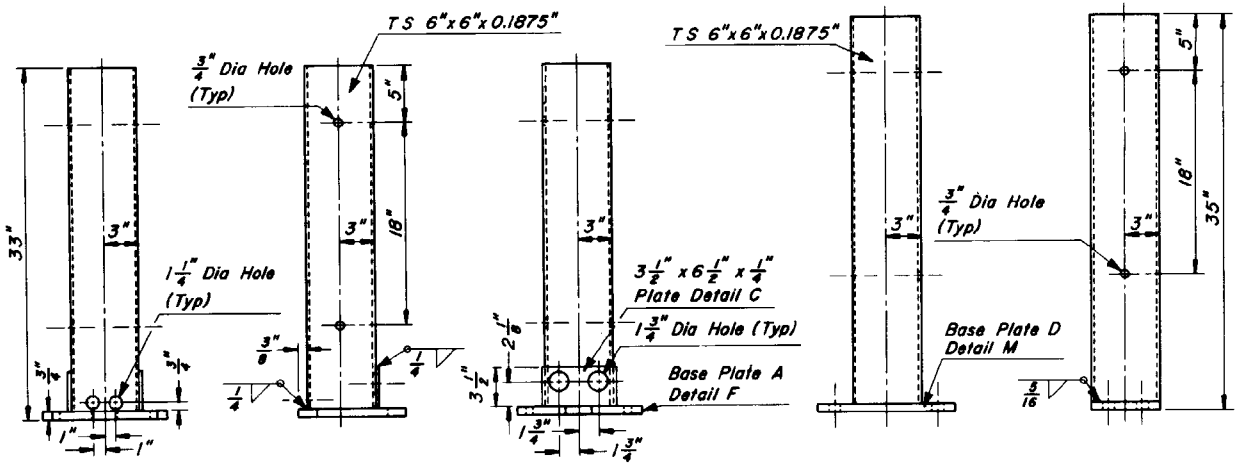

DETAIL H
(TERMINAL STEEL POST)

DETAIL J
(STEEL POST)

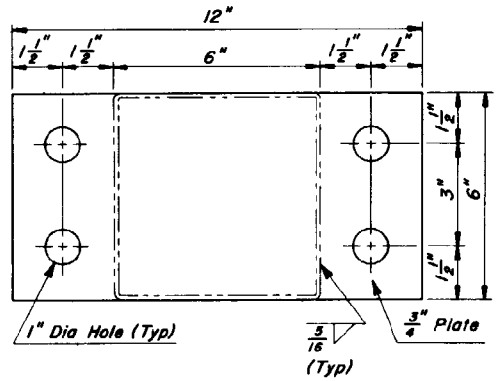

DETAIL M
(BASE PLATE D)

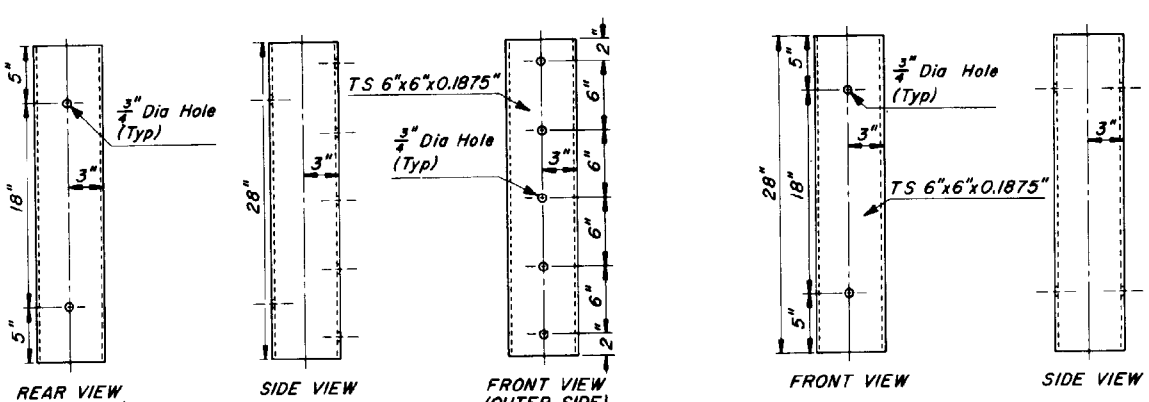

DETAIL K
(SPECIAL STEEL BLOCK)

DETAIL L
(STEEL BLOCK)

DESIGN APPROVED	STATE OF ARIZONA DEPARTMENT OF TRANSPORTATION DIVISION OF HIGHWAYS STANDARD DRAWINGS	REV. 7/85
APPROVED FOR DISTRIBUTION	W BEAM BCT ATTENUATOR ASSEMBLY, CURB INSTALLATION	DRAWING NO. C-10.50 Sheet 4 of 5

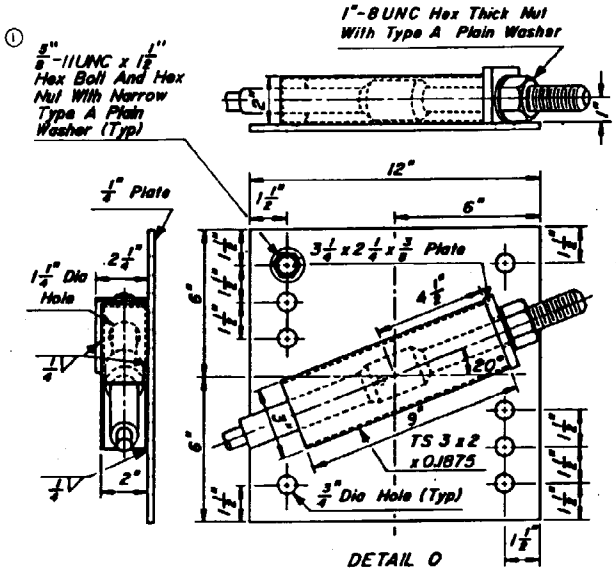

DETAIL O
(BCT PLATE ASSEMBLY)

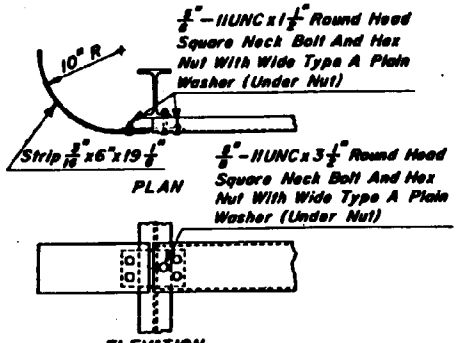

DETAIL Q
(RUB RAIL
TERMINAL ASSEMBLY)

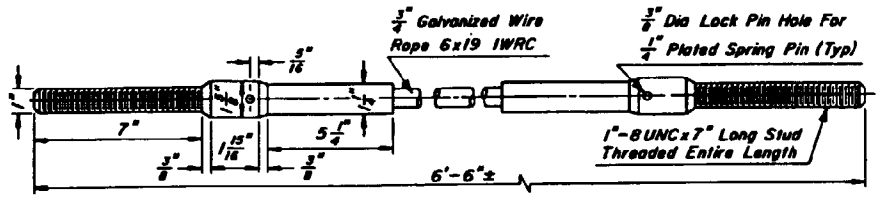

DETAIL P
(BCT CABLE ASSEMBLY)

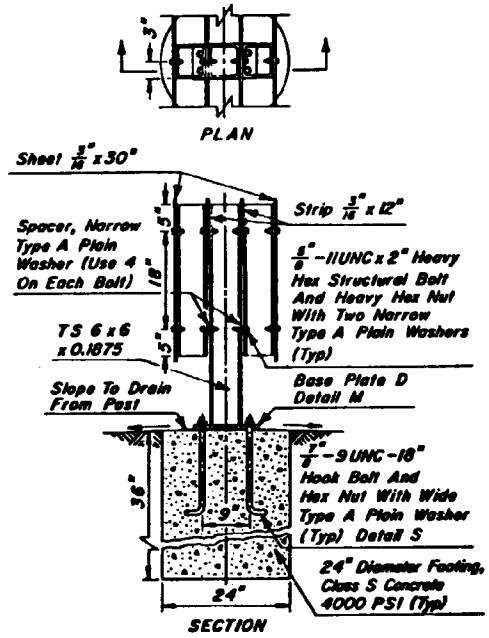

DETAIL R
(POST AND BLOCK ATTACHMENT)

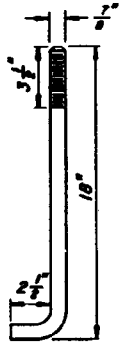

DETAIL S
7/8"-9UNC-18"
HOOK BOLT
(RIGHT ANGLE BENT)

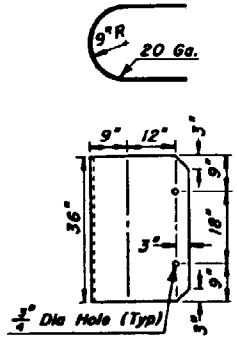

DETAIL T
(NOSE PLATE)

REDUCED SIZE
DO NOT SCALE

DESIGN APPROVED	STATE OF ARIZONA DEPARTMENT OF TRANSPORTATION DIVISION OF HIGHWAYS STANDARD DRAWINGS	REV. 5-89
APPROVED FOR DISTRIBUTION	W BEAM BCT ATTENUATOR ASSEMBLY, CURB INSTALLATION	DRAWING NO. C-10.50 Sheet 5 of 5

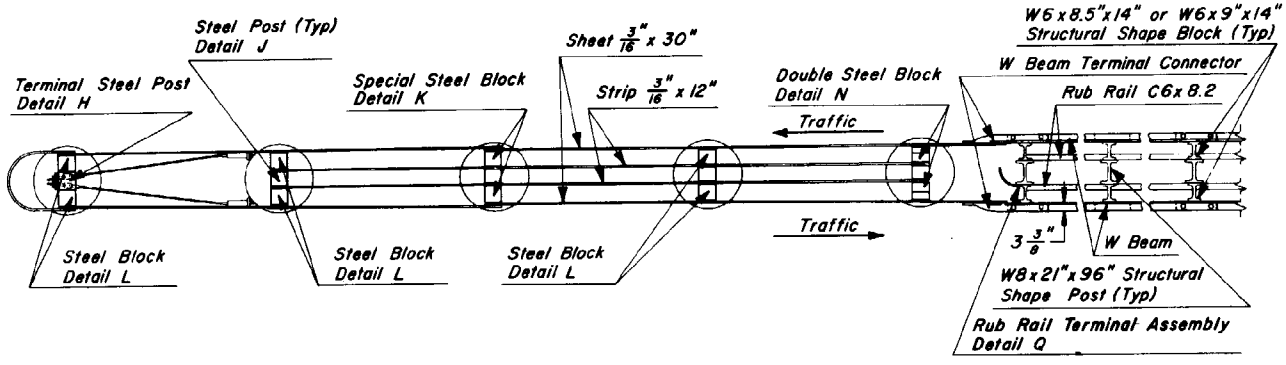

PLAN

GENERAL NOTES

⬢—Indicates ARTBA designation.

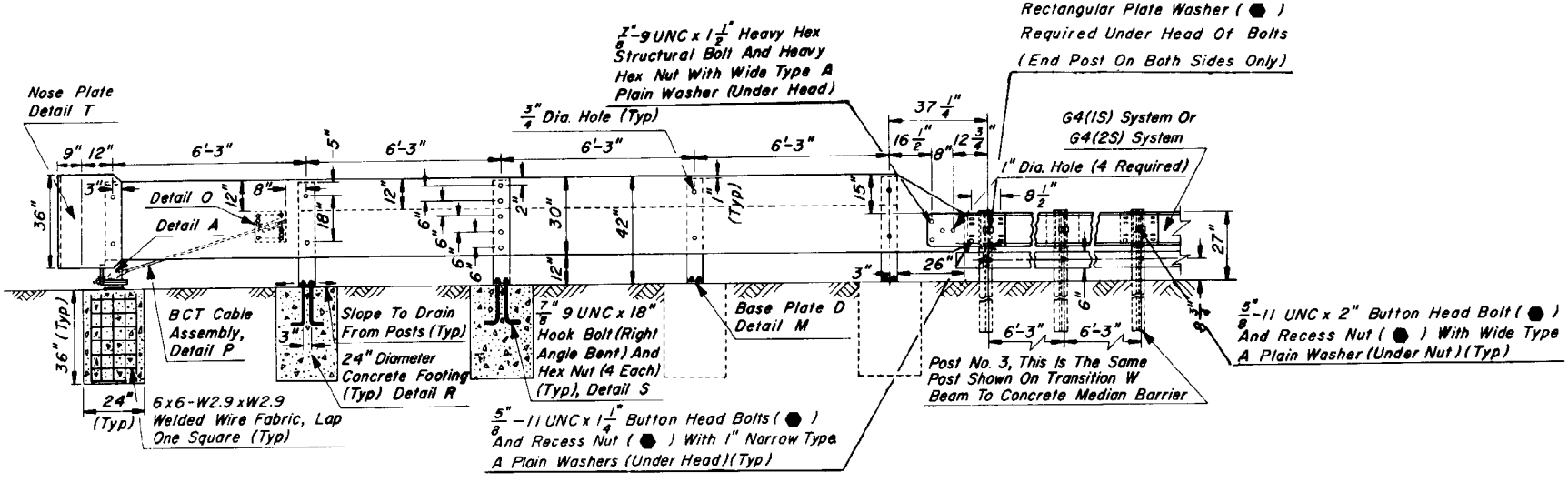

ELEVATION

DESIGN APPROVED	STATE OF ARIZONA DEPARTMENT OF TRANSPORTATION DIVISION OF HIGHWAYS STANDARD DRAWINGS	REV. 7/85
APPROVED FOR DISTRIBUTION	MEDIAN W BEAM BCT ATTENUATOR ASSEMBLY	DRAWING NO. C-10.55 Sheet 1 of 4

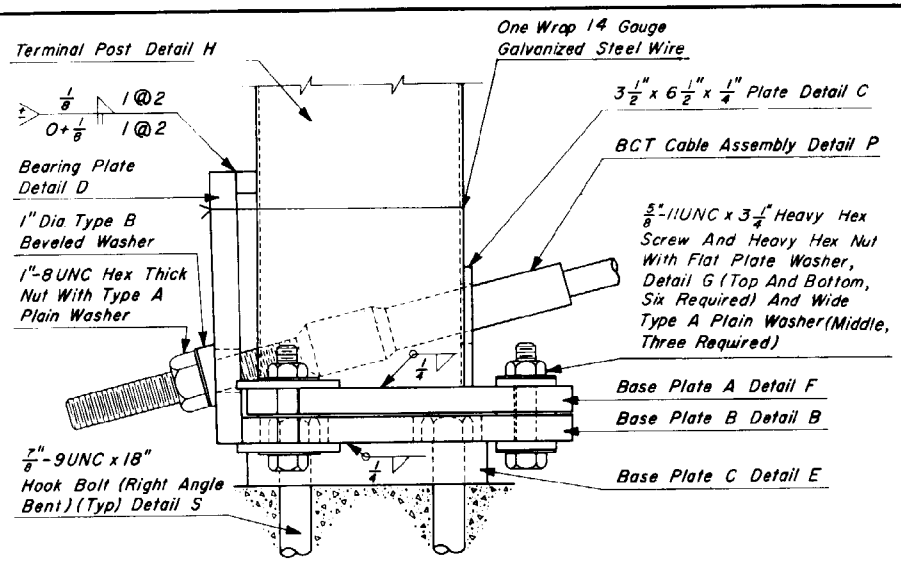

DETAIL A

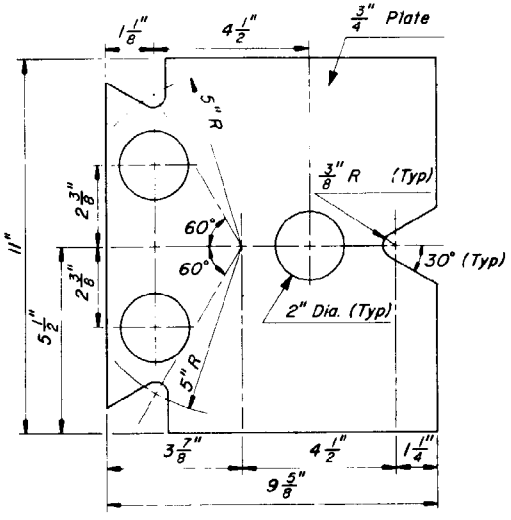

DETAIL B (BASE PLATE B)

GENERAL NOTES

1. BCT Cable Assembly shall be tightened to remove slack.
2. 5/8"-11UNC x 3 1/4" Heavy Hex Screw, connecting Base Plate A to Base Plate B, shall be torqued to 170 ft. lbs.
3. To ensure that the BCT (Steel) Bearing Plate remains in position one wrap of 14 Gauge Galvanized Steel Wire shall be wrapped around the BCT Terminal Post (Steel) and near the top of the plate.

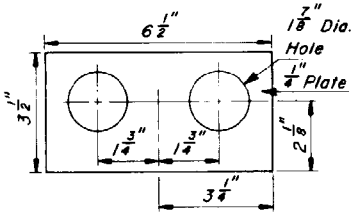

DETAIL C

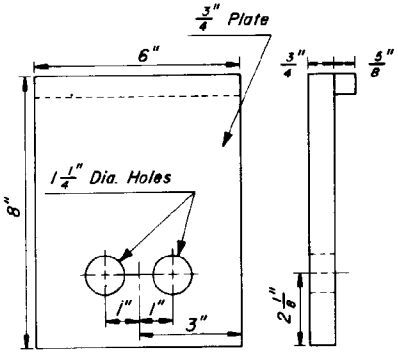

DETAIL D
(BEARING PLATE)

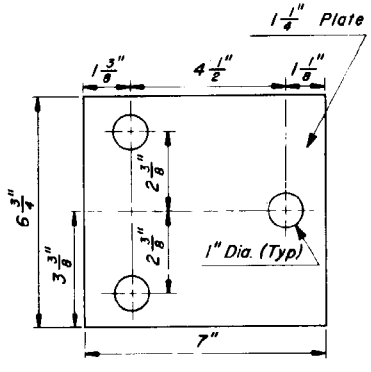

DETAIL E
(BASE PLATE C)

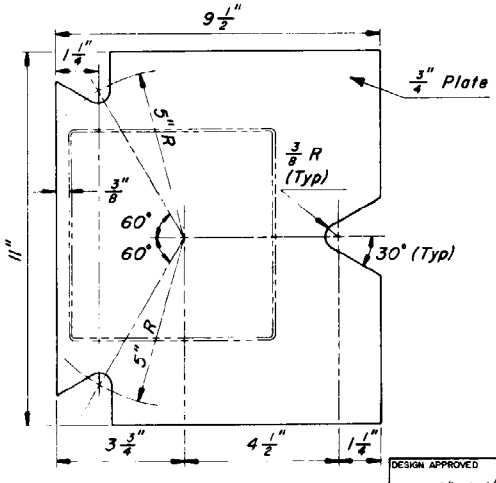

DETAIL F (BASE PLATE A)

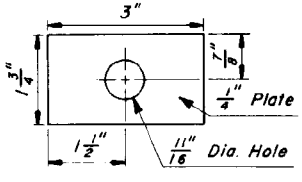

DETAIL G
FLAT PLATE WASHER

DESIGN APPROVED	STATE OF ARIZONA DEPARTMENT OF TRANSPORTATION DIVISION OF HIGHWAYS STANDARD DRAWINGS	REV. 6/86
APPROVED FOR DISTRIBUTION	MEDIAN W BEAM BCT ATTENUATOR ASSEMBLY	DRAWING NO. C-10.55 Sheet 2 of 4

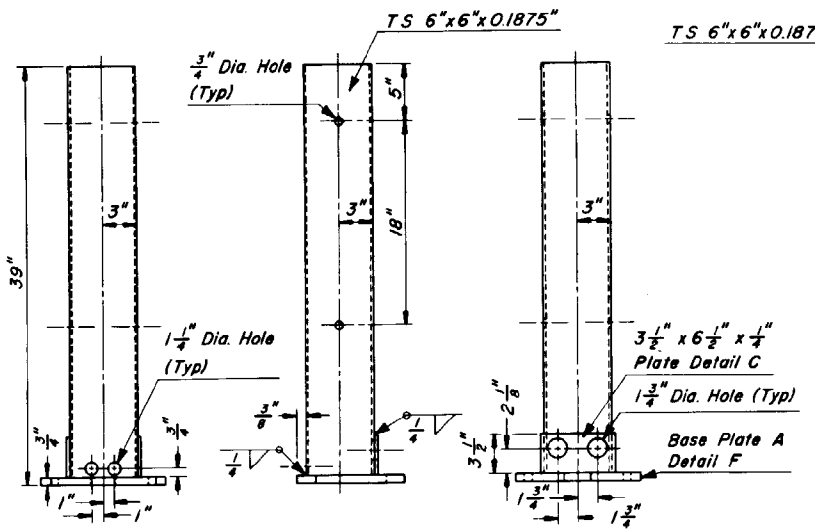

DETAIL H
(TERMINAL STEEL POST)

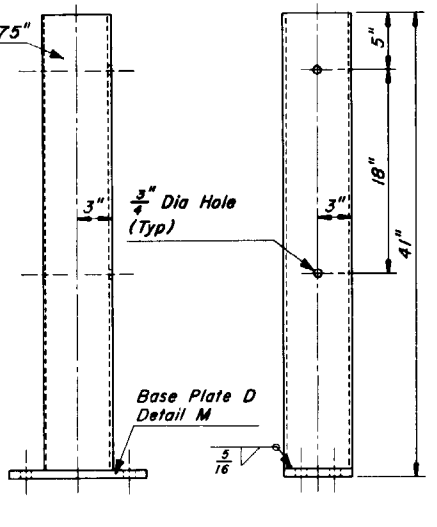

DETAIL J
(STEEL POST)

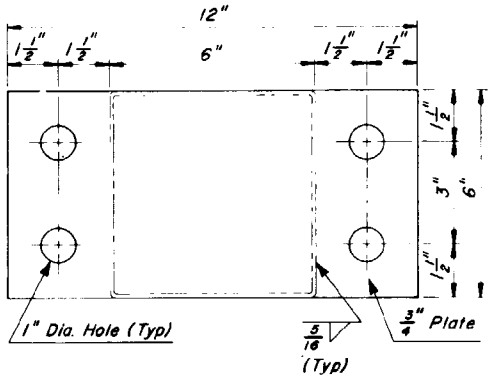

DETAIL M
(BASE PLATE D)

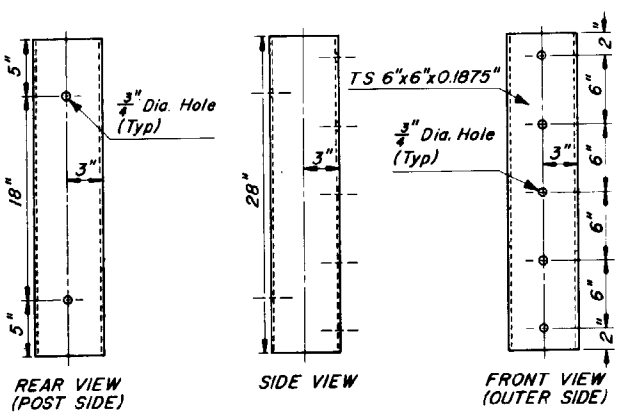

DETAIL K
(SPECIAL STEEL BLOCK)

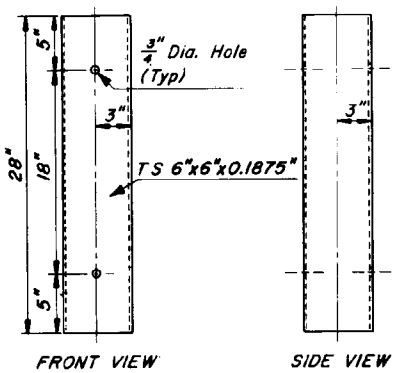

DETAIL L
(STEEL BLOCK)

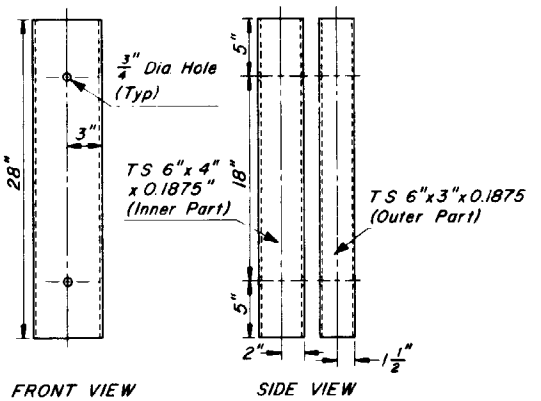

DETAIL N
(DOUBLE STEEL BLOCK)

DESIGN APPROVED	STATE OF ARIZONA DEPARTMENT OF TRANSPORTATION DIVISION OF HIGHWAYS STANDARD DRAWINGS	REV. 7/85
APPROVED FOR DISTRIBUTION	MEDIAN W BEAM BCT ATTENUATOR ASSEMBLY	DRAWING NO. C-10.55 Sheet 3 of 4

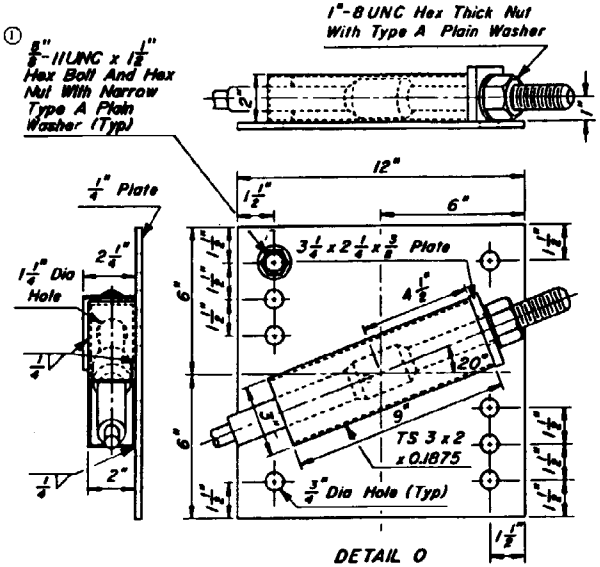

DETAIL O
(BCT PLATE ASSEMBLY)

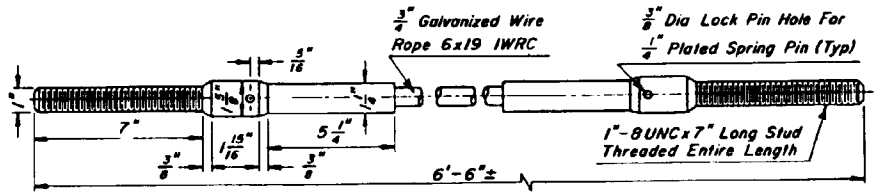

DETAIL P
(BCT CABLE ASSEMBLY)

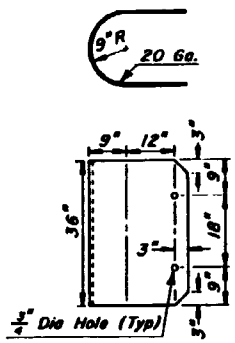

DETAIL Q
(NOSE PLATE)

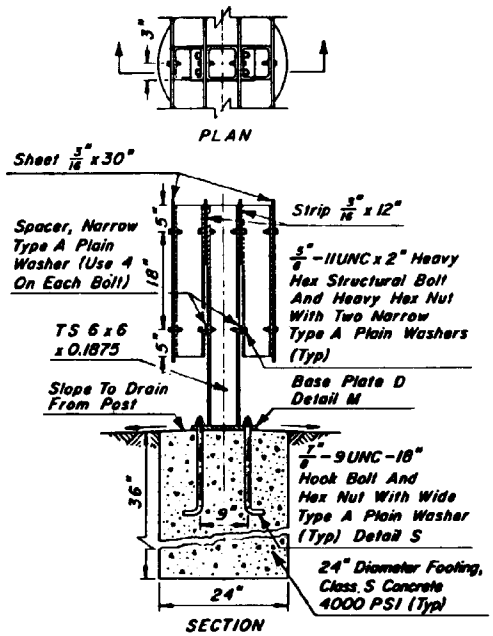

DETAIL R
(POST AND BLOCK ATTACHMENT)

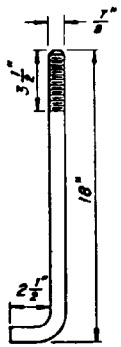

DETAIL S
7/8"-9UNC-18"
HOOK BOLT
(RIGHT ANGLE BENT)

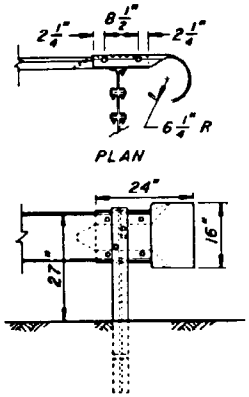

DETAIL T
(W BEAM ROUNDED END SECTION)

REDUCED SIZE DO NOT SCALE

DESIGN APPROVED / APPROVED FOR DISTRIBUTION	STATE OF ARIZONA DEPARTMENT OF TRANSPORTATION DIVISION OF HIGHWAYS STANDARD DRAWINGS	REV. 5-89
	MEDIAN W BEAM BCT ATTENUATOR ASSEMBLY	DRAWING NO. C-10.55 Sheet 4 of 4

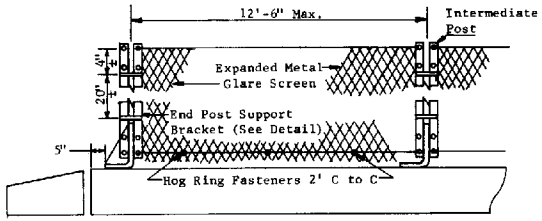

MEDIAN BARRIER GLARE SCREEN

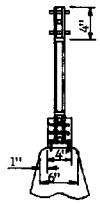

SECTION THRU BARRIER*

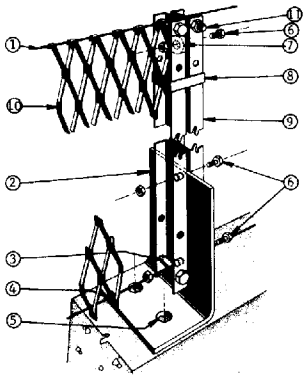

TYPICAL CLARE SCREEN INSTALLATION

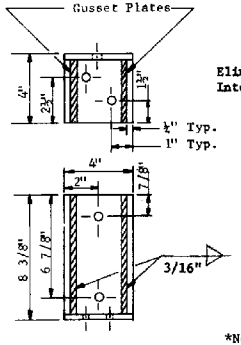

POST SUPPORT BRACKET

Eliminate Gusset Plates on Intermediate Post Support Brackets

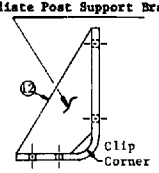

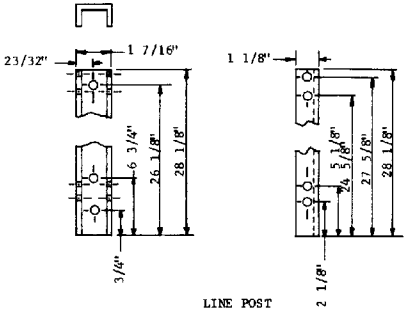

LINE POST

*Note: Contractor may drill holes or cast holes to set anchor bolt required to anchor plate of glare screen post assembly to the median barrier. If cast hole is used, seat bolt in sulfur, epoxy or other material approved by the Engineer.

GENERAL NOTES

1. Tension wire: AWG No. 9 (0.148") galv. to conform to ASTM-A-116 Class 2. Wind wire approximately 3 times around ferrule.
2. 1/4" Support bracket: (0.250") ASTM-A-569, Galv. ASTM-A-123 (after fabrication)
3. Ferrule for tension take-up: ASTM-A-569, 9/16" ID x 1-3/16" long x 0.0747" with 3/16" notch in ends. Galv. ASTM-A-153 Class B-3 (after fabrication)
4. Hog ring: AWG No. 12 (0.105") Galv. ASTM-A-116 Class 2. Fasten glare barrier to bottom tension wire spaced approximately 2' apart.
5. 1/2" Drilled-in expansion anchors: 5/8" dia. hole-1/2" hex bolt ASTM-A-307, Glav. ASTM-153 Class C (Phillips Red Head or equal). (See note for alternate).
6. 1/2" x 1" Hex head bolt with hex nut: ASTM-A-307, Galv. ASTM-A-153 Class G.
7. 1/4" x 1" Plate round or square spacer: 9/16" Dia. hole, ASTM-A-36, Galv. ASTM-A-153 Class C.
8. Stainless steel strap & seal shall conform to ASTM-A-176 Type 430. Straps 0.020" x 0.125" (single crimp)
9. Line post: 1-7/16" x 1-1/8" x 0.1196" channel, ASTM-A-569 (2 req'd) Galv. ASTM-A-123 (after fab.)
10. Glare screen: 18 Ga. steel, ASTM-A-526, Galv. ASTM-A-525/G235), expanded to the following dimensions; 1.33" shortway of diamond and 4.0" longway of diamond (C to C of bridges) with a strand width of 0.250" angled at approx. 20° to plane of orig. sheet. Top edge to be shop curled, and crimped on 12" centers. After expansion, galv. steel shall be prepared according to Mil. Spec. TT-C-490 and primed with baked on Zinc Chromate Epoxy min. 0.2 Mil. dry film. Finish coat shall be Polyester Enamel min. 1.0 Mil. by the electrostatic spray method. Color shall be indicated on plans.
11. 1/2" x 2" Hex head cap screw and hex nut with 3/16" hole drilled through stem ASTM-A-307, Galv. ASTM-A-153, Class C.
12. 0.1793" Gusset ASTM-A-569 Galv. ASTM-A-123.
13. All intermediate post support brackets shall face in same direction. End panel support brackets shall face as shown.

DESIGN APPROVED	STATE OF ARIZONA DEPARTMENT OF TRANSPORTATION DIVISION OF HIGHWAYS STANDARD DRAWINGS	REV. 1/83
APPROVED FOR DISTRIBUTION	GLARE SCREEN, TYPE "P" CONC. MEDIAN BARRIER	DRAWING NO. C-10.96

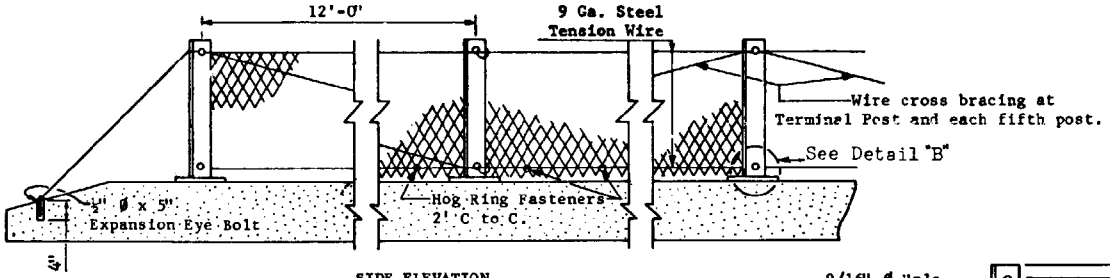

SIDE ELEVATION

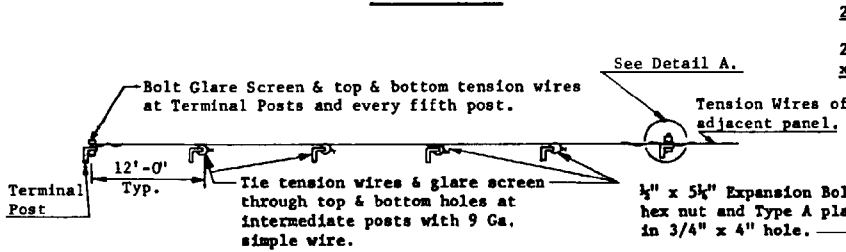

FASTENER LOCATIONS ▲

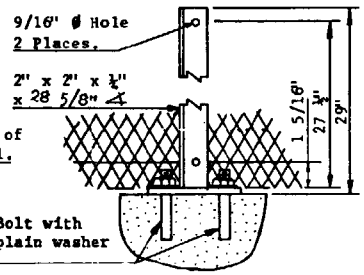

DETAIL "B"
Elevation

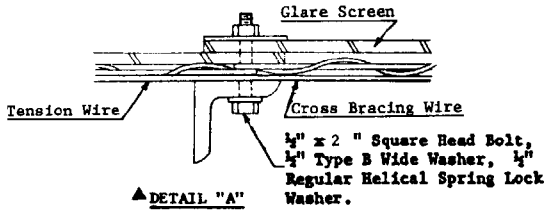

▲DETAIL "A"

Splices allowed in glare screen at posts only, with 1-full diamond overlap.

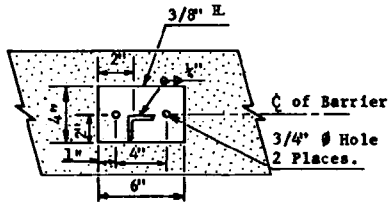

DETAIL "B"
Plan

GENERAL NOTES

Posts shall be 12'-0" C to C. Structural steel shall conform to ASTM-A-36, Galv. ASTM-A-123.

Square head bolt shall conform to ASTM-A-307, Galv. ASTM-A-153 Class C.

Type B washer shall conform to ASTM-F-436, Galv. ASTM-A-153 Class C.

Helical spring lock washer shall conform to ASTM-A-313, Galv. ASTM-A-153 Class C.

For other Glare Screen dimensions and specifications, see Standard C-10.96.

DESIGN APPROVED	STATE OF ARIZONA DEPARTMENT OF TRANSPORTATION DIVISION OF HIGHWAYS STANDARD DRAWINGS	REV. 11/83
APPROVED FOR DISTRIBUTION	GLARE SCREEN, TYPE "O" CONC. MEDIAN BARRIER	DRAWING NO. C-10.97

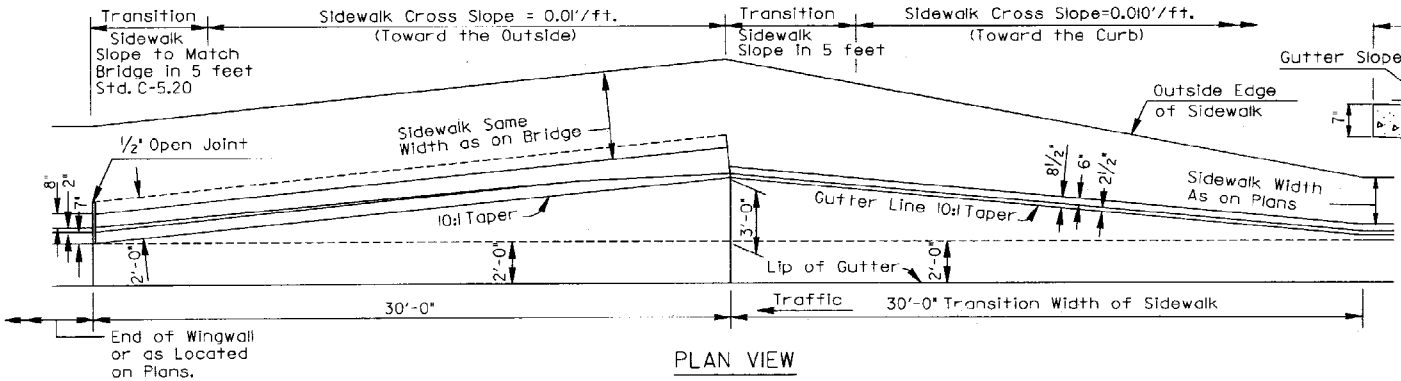

PLAN VIEW

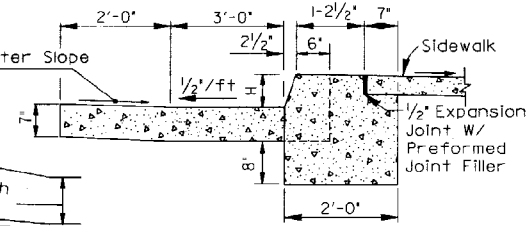

SECTION C-C

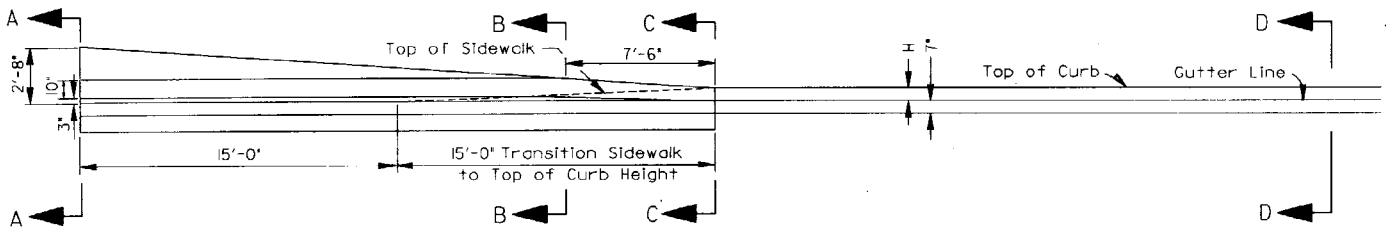

ELEVATION

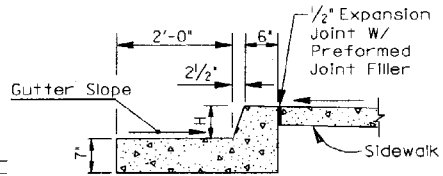

SECTION D-D

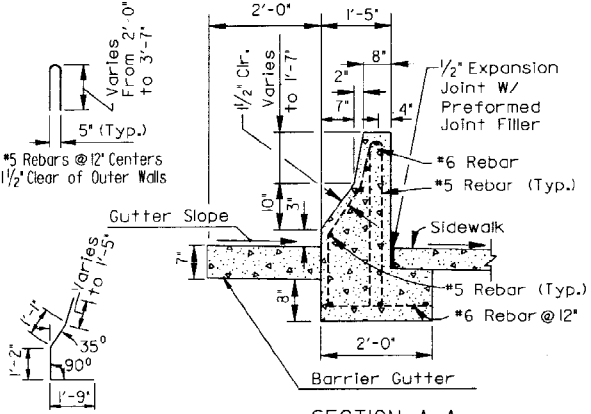

SECTION A-A

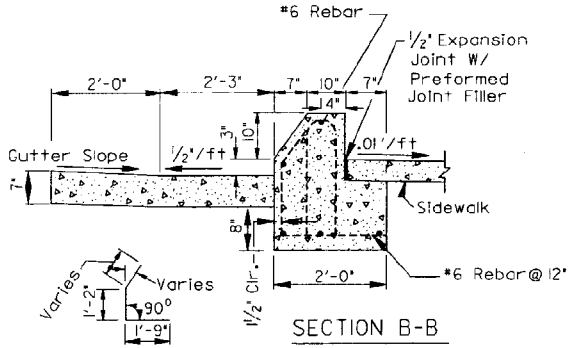

SECTION B-B

GENERAL NOTES:

1. All concrete shall be Class "S" (f'c =3000 psi).
2. All reinforcing steel shall conform to Sect. 1003-1, 1003-2, Grade 40.
3. All reinforcing steel shall have 2" minimum clear cover unless otherwise noted.
4. Transverse construction joints shall extend through the foundation slab and be located at intervals not to exceed 20 feet, except for Barrier Transition.
5. The barrier gutter and barrier transition gutter shall be included in the cost of the barrier. The variable width gutter beyond the barrier shall be included in the cost of the curb and gutter
6. See drainage sheets for slotted drain and catch basin details.
7. See Std. C-10.99 for barrier gutter detail.
8. See Std. C-5.11, Detail A for Sidewalk Construction.

DESIGN APPROVED George R. Hale	STATE OF ARIZONA DEPARTMENT OF TRANSPORTATION DIVISION OF HIGHWAYS STANDARD DRAWINGS	10/89
APPROVED FOR DISTRIBUTION	BARRIER TRANSITION-TANGENT TYPE A	DRAWING NO. C-10.98 Sheet 1 of 2

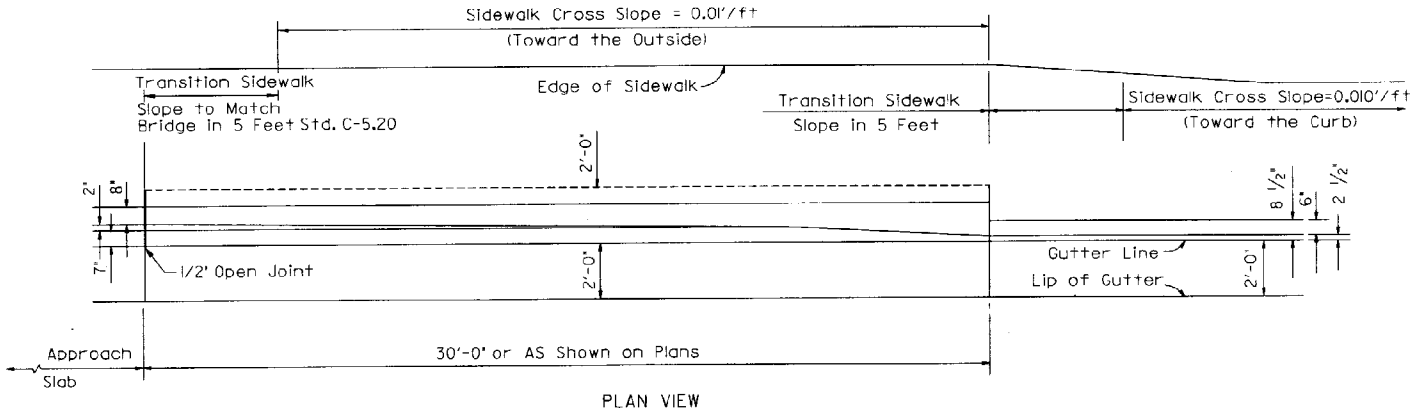

PLAN VIEW

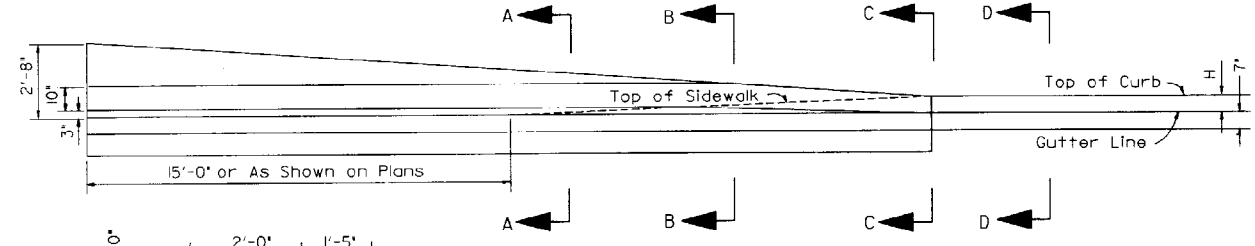

ELEVATION

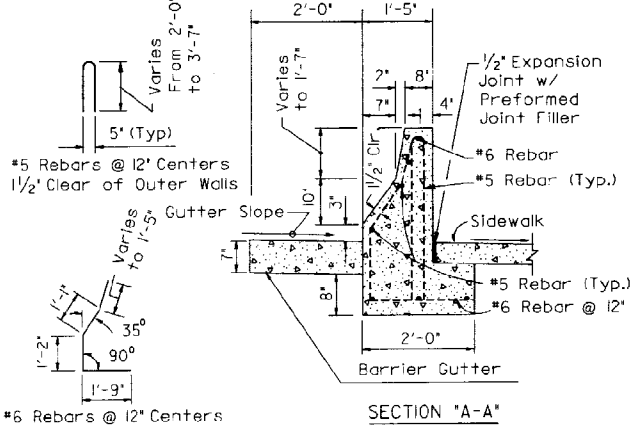

SECTION "A-A"

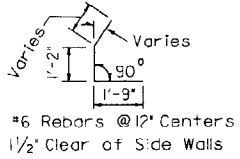

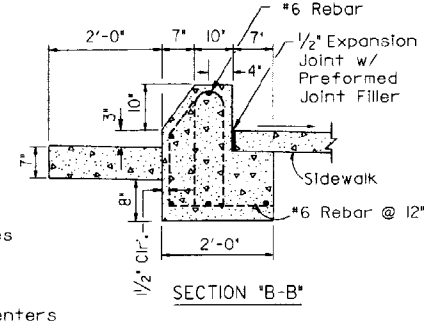

SECTION "B-B"

GENERAL NOTES

1. All concrete shall be Class "S" (f'c = 3000 psi.)
2. All reinforcing steel shall conform to Sect. 1003-1, 2 Grade 40.
3. All reinforcing steel shal have 2" minimum clear cover unless otherwise noted.
4. Transverse construction joints shall extend through the foundation slab and be located at intervals not to exceed 20 feet, except for Barrier Transition.
5. The barrier gutter and barrier transition gutter shall be included in the cost of the barrier.
6. See drainage sheets for slotted drain and catch basin details.
7. See Std. C-10.99 for barrier gutter detail.
8. See Std. C-5.11, Detail A for Sidewalk Construction.

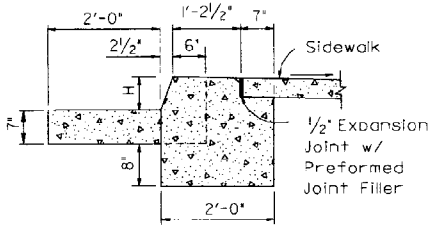

SECTION "C-C"

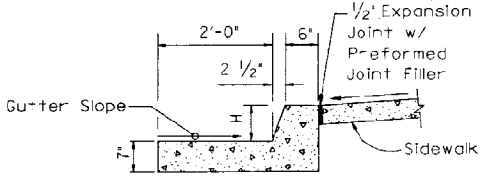

SECTION "D-D"

DESIGN APPROVED George R. Hale	STATE OF ARIZONA DEPARTMENT OF TRANSPORTATION DIVISION OF HIGHWAYS STANDARD DRAWINGS	10/89
APPROVED FOR DISTRIBUTION	BARRIER TRANSITION-TANGENT TYPE B	DRAWING NO. C-10.98 Sheet 2 of 2

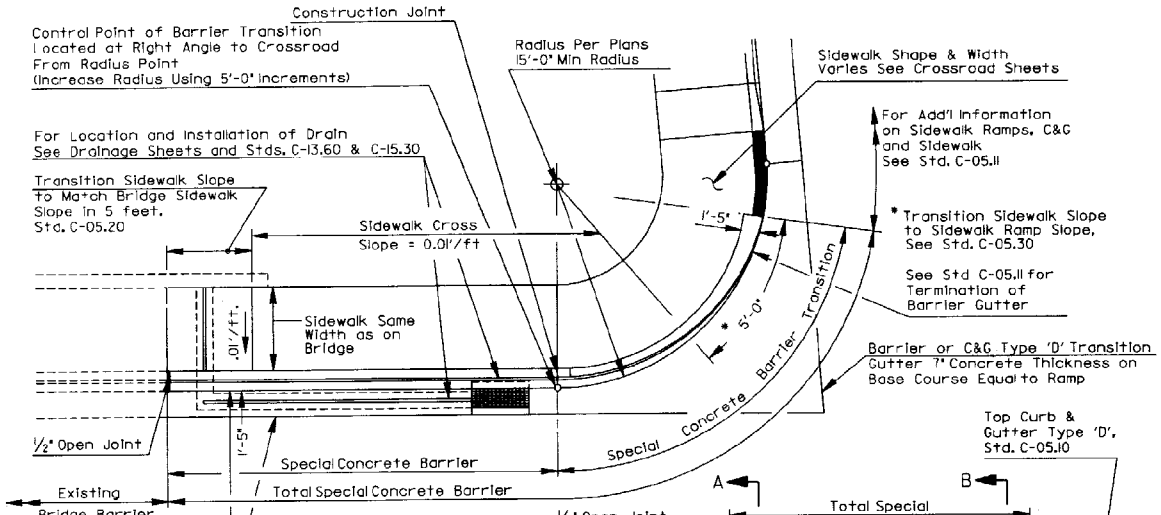

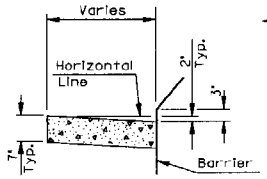

BARRIER GUTTER
TYPICAL

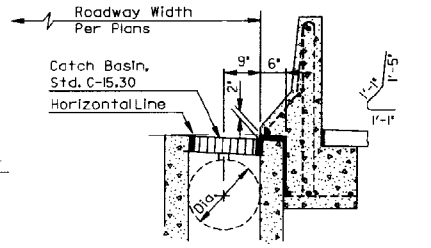

SECTION A-A AT CATCH BASINS

GENERAL NOTES

1. All reinforcing steel shall conform to Sect. 1003-1, 2 Grade 40
2. All reinforcing steel shall have 2" minimum clear cover unless otherwise noted.
3. Transverse construction joints shall extend through the foundation slab and be located at intervals not to exceed 20 feet, except for Barrier Transition.
4. The barrier gutter and barrier transition gutter shall be included in the cost of the barrier.
5. See drainage sheets for slotted drain and catch basin details.
6. Barrier gutter width to match adjacent gutter width.
7. Special Concrete Barrier Transition may be deleted in departure applications as called out on Plans. See Special Concrete Barrier Departure Termination.

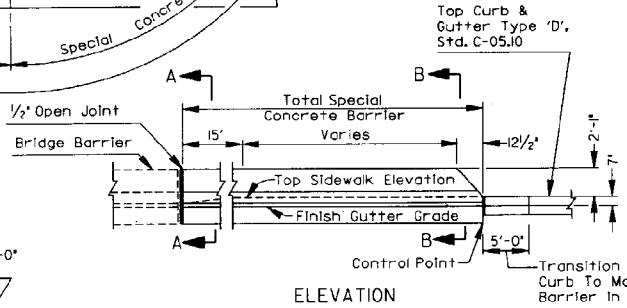

ELEVATION
SPECIAL CONCRETE
BARRIER DEPARTURE TERMINATION

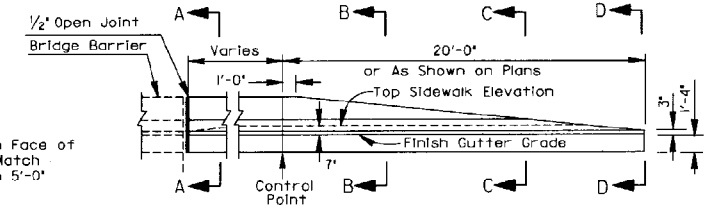

ELEVATION
SPECIAL CONCRETE BARRIER TRANSITION

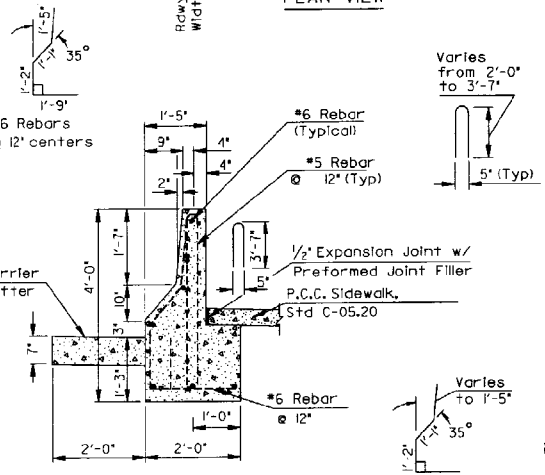

SECTION A-A

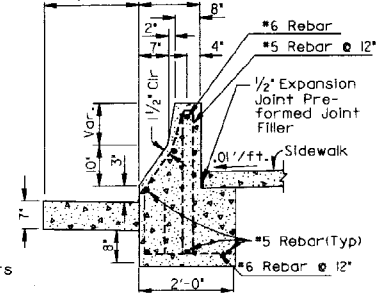

SECTION B-B

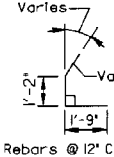

*6 Rebars @ 12" Centers

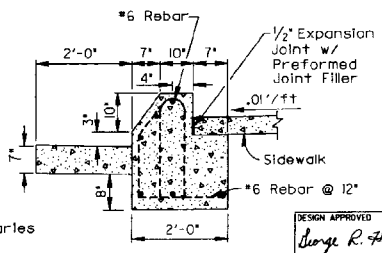

SECTION C-C

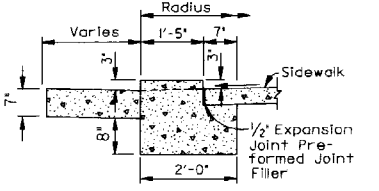

SECTION D-D

DESIGN APPROVED George R. Hale APPROVED FOR DISTRIBUTION	STATE OF ARIZONA DEPARTMENT OF TRANSPORTATION DIVISION OF HIGHWAYS STANDARD DRAWINGS	10/89
	BARRIER TRANSITION CURVE	DRAWING NO. C-10.99

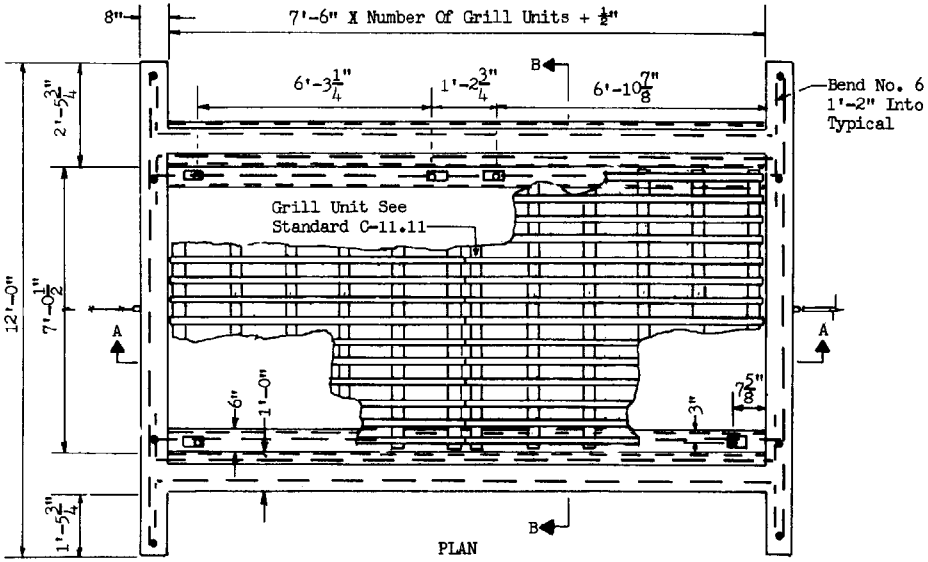

GENERAL NOTES:

1. Standard Plans for Cattle Guard, Footing Type, consists of Standards C-11.10, C-11.11, and C-11.12.
2. Cattle guard shall be sloped to conform to the roadway cross section, except that where an odd number of grill units is specified in a crowned roadway, the center grill unit shall be installed level.
3. Where the adjacent roadway is paved, an angle 4" X 4" X 3/8" with 5/8" diameter stud with head, 1'-0" alternate center to center is required.
4. Where the adjacent roadway is unpaved, an angle assembly is required. An angle asembly consists of one 4" X 4" X 3/8" angle and one 2" X 2" X 3/8" angle connected with 5/8" diameter studs. The studs shall be bent 90° and placed on 1'-0" centers.
5. Each angle and angle assembly shall be fabricated to form a single piece for the full length of the cattle guard.
6. Quantities shown for concrete and reinforcing bars are to be considered approximations for informational purposes only.
7. When guard rail is to be used at the cattle guard, it may be possible to reduce the number of grill units required.

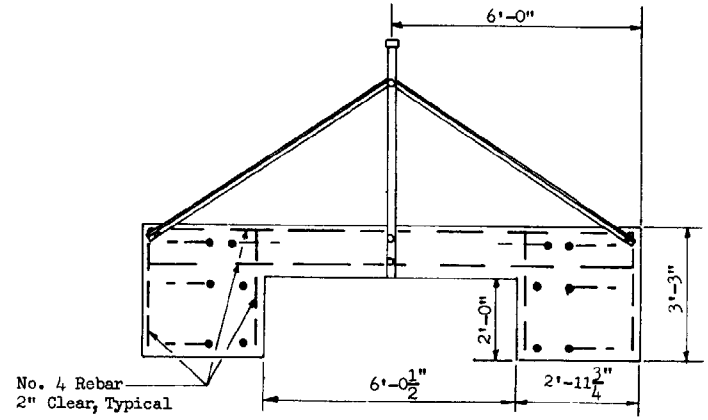

END VIEW

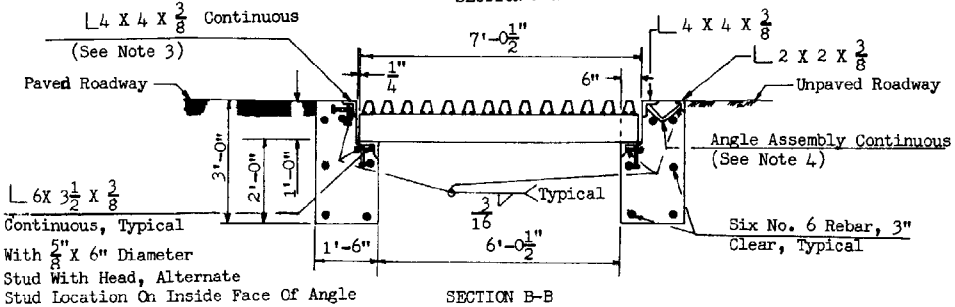

UNIT TABLE

ROADWAY WIDTH (FEET)	GRILL UNITS REQUIRED	CONCRETE CUBIC YARDS	REBAR. LBS.
12	2	5.8	173.3
16	3	8.0	240.9
20	4	10.3	308.5
28	5	12.5	376.1
34	6	14.7	443.7
36	6	14.7	443.7
38	7	16.9	511.2
40	7	16.9	511.2

DESIGN APPROVED

APPROVED FOR DISTRIBUTION

STATE OF ARIZONA
DEPARTMENT OF TRANSPORTATION
DIVISION OF HIGHWAYS
STANDARD DRAWINGS

REV. 1/83

ROADWAY CATTLE GUARD-FOOTING TYPE

DRAWING NO. C-11.10

GENERAL NOTES:

1. For Cattle Guard details see Std. C-11.10.

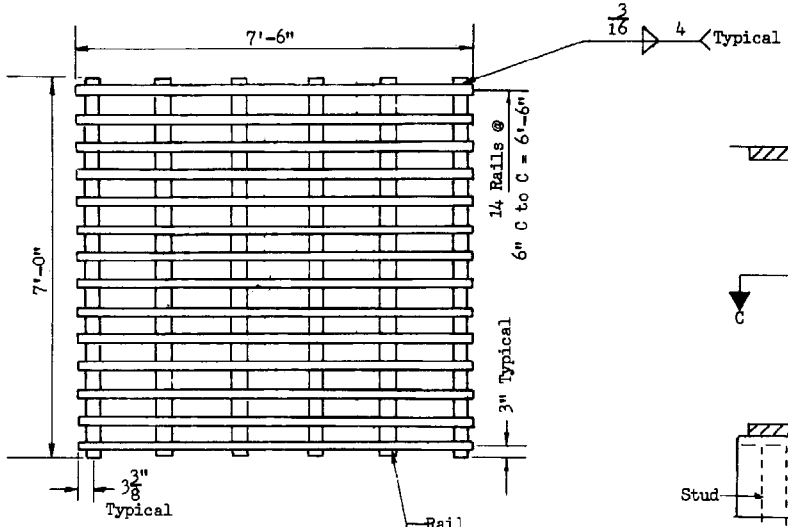

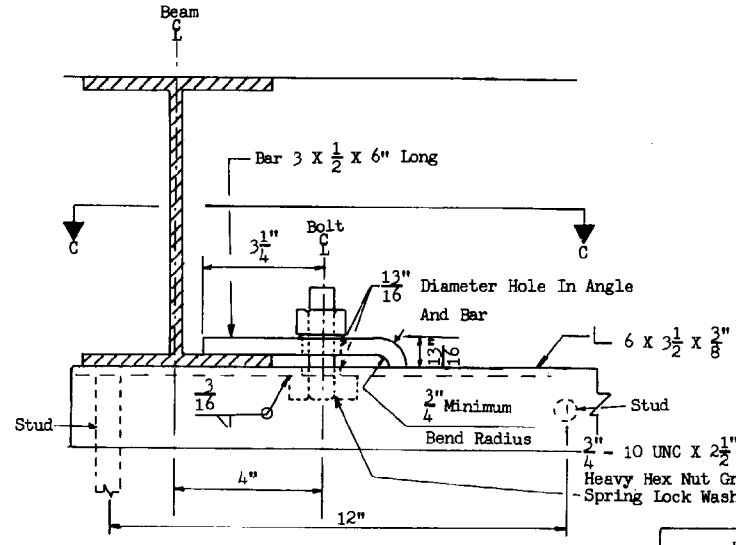

GRILL CLAMP

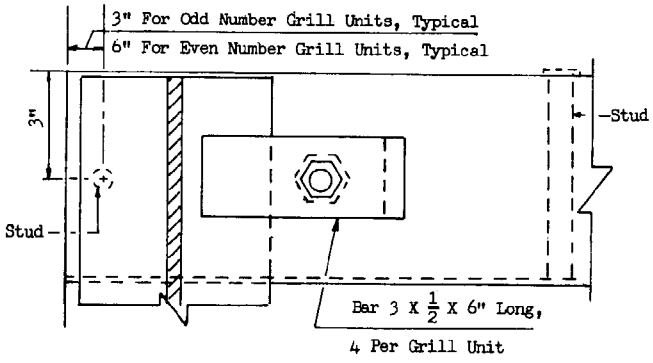

SECTION C-C

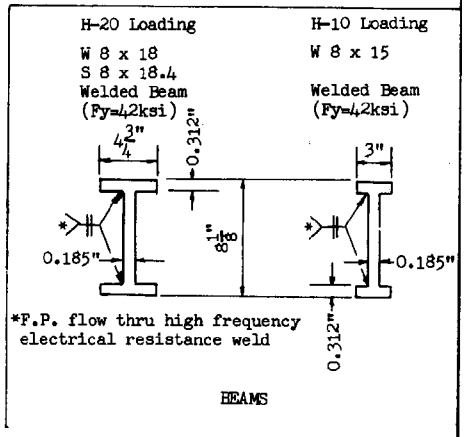

BEAMS

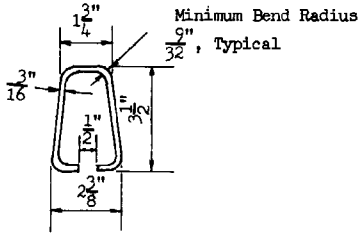

RAIL

GRILL UNIT

DESIGN APPROVED	STATE OF ARIZONA DEPARTMENT OF TRANSPORTATION DIVISION OF HIGHWAYS STANDARD DRAWINGS	REV. 1/83
APPROVED FOR DISTRIBUTION	ROADWAY CATTLE GUARD - GRILL & GRILL CLAMP DETAIL	DRAWING NO. C-11.11

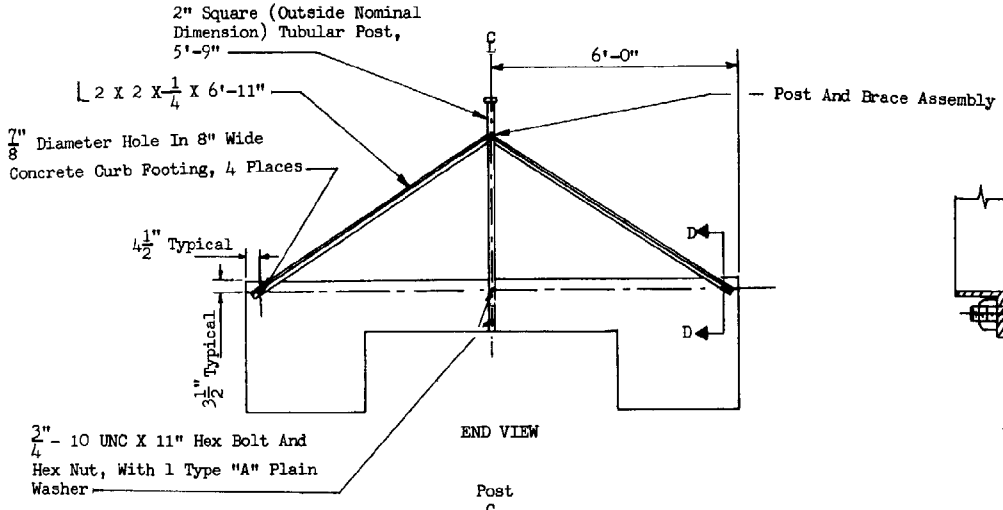

END VIEW

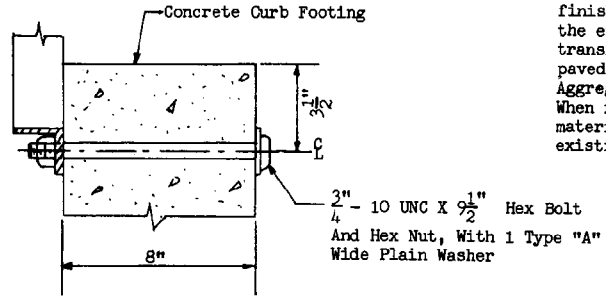

SECTION D-D

GENERAL NOTES:

1. For Cattle Guard details see Std. C-11.10.

2. Material for shoulder transition shall be placed to the finished roadway elevation for the entire length of the transition. When the roadway is paved, Aggregate Subbase or Aggregate Base shall be used. When roadway is unpaved a material equivalent to the existing roadway shall be used.

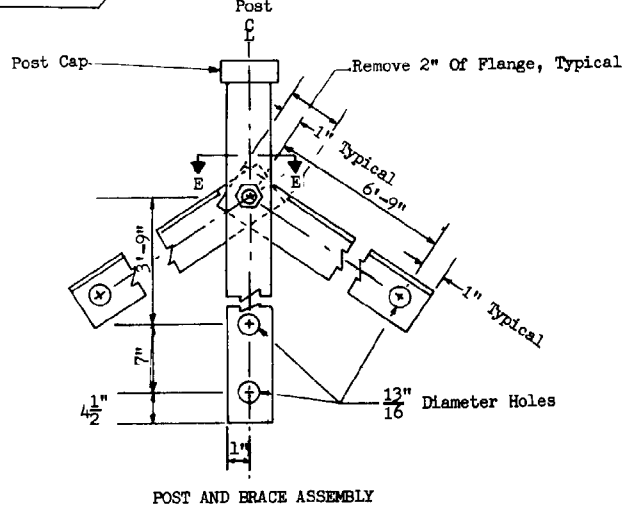

POST AND BRACE ASSEMBLY

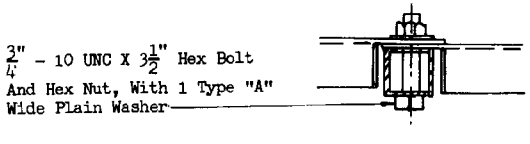

SECTION E-E

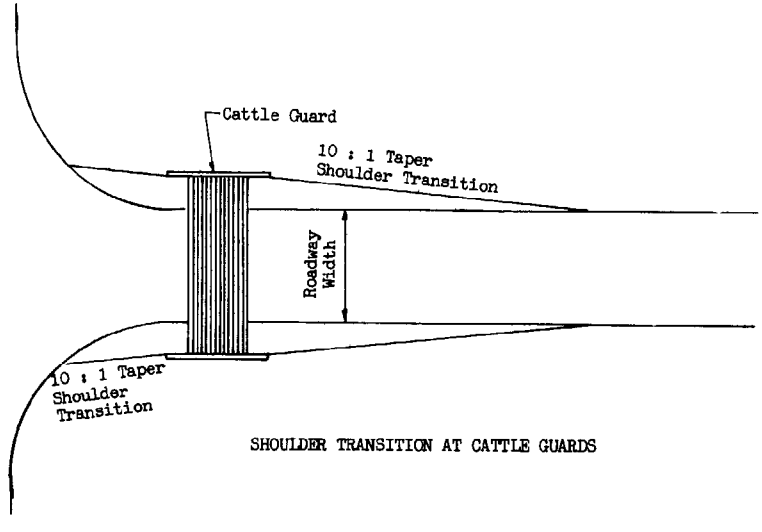

SHOULDER TRANSITION AT CATTLE GUARDS

DESIGN APPROVED	STATE OF ARIZONA DEPARTMENT OF TRANSPORTATION DIVISION OF HIGHWAYS STANDARD DRAWINGS	REV. 1/83
APPROVED FOR DISTRIBUTION	ROADWAY CATTLE GUARD - FOOTING TYPE, MISC. DETAILS	DRAWING NO. C-11.12

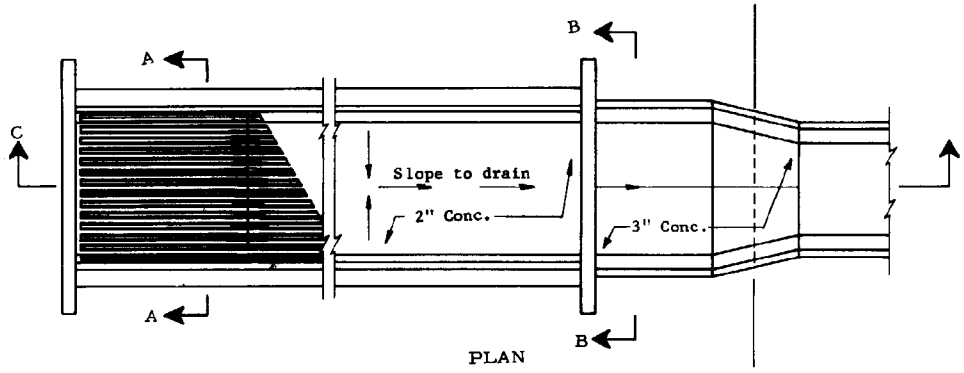

PLAN

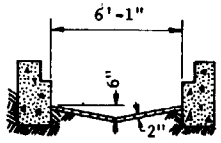

SECTION A-A

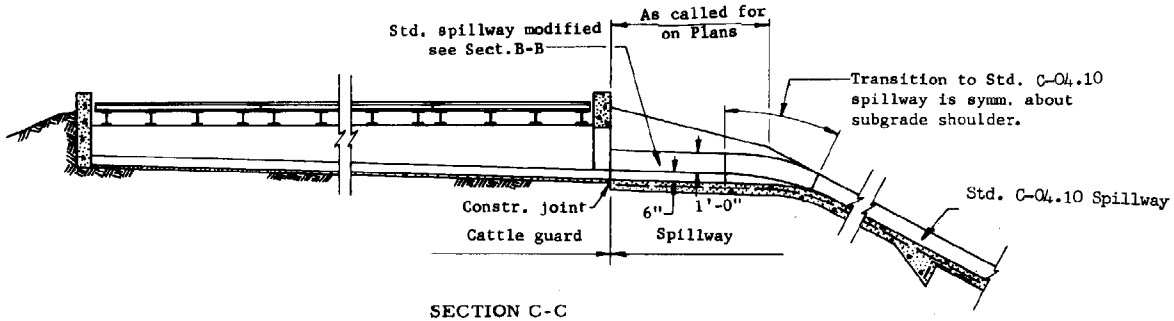

SECTION C-C
IN EMBANKMENT

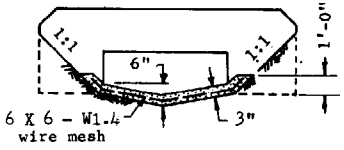

SECTION B-B

GENERAL NOTES

1. For all other cattle guard details, See Stds. C-11.10, 11.11 & 11.12.
2. This standards shall be used in em - bankment or where highly erodable soil is found
3. All concrete shall be Class B.

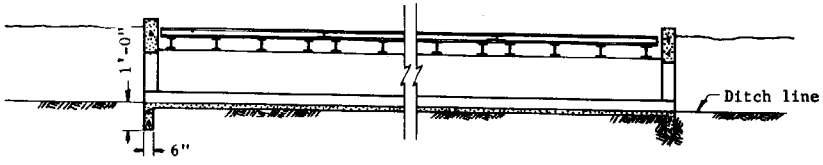

SECTION C-C

WHERE USED FOR THRU DRAINAGE-
CATTLE GUARD OPEN BOTH ENDS

DESIGN APPROVED	STATE OF ARIZONA DEPARTMENT OF TRANSPORTATION DIVISION OF HIGHWAYS STANDARD DRAWINGS	REV. 1/83
APPROVED FOR DISTRIBUTION	CATTLE GUARD, DRAINAGE	DRAWING NO. C-11.20

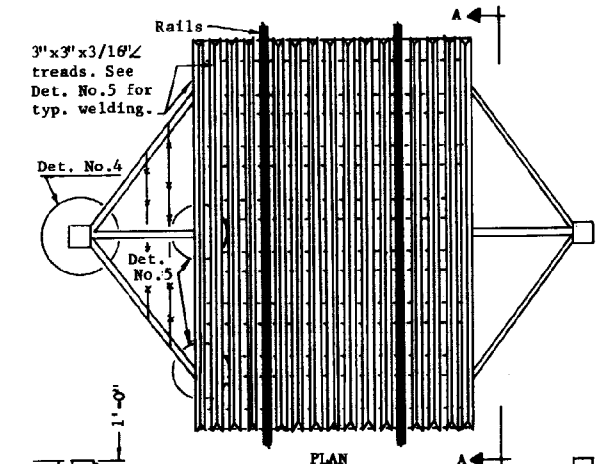

PLAN

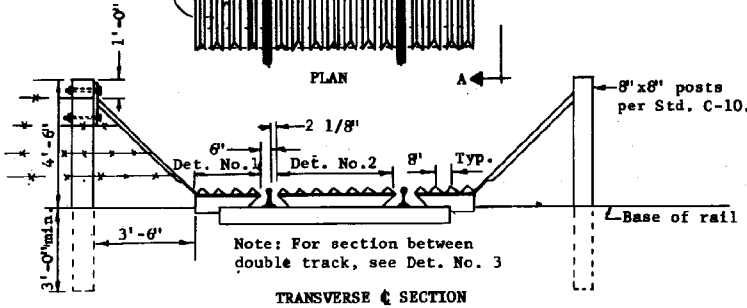

Note: For section between double track, see Det. No. 3

TRANSVERSE ℄ SECTION

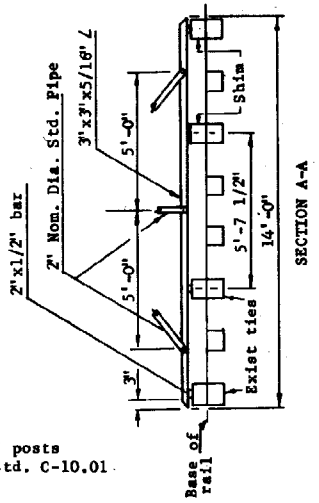

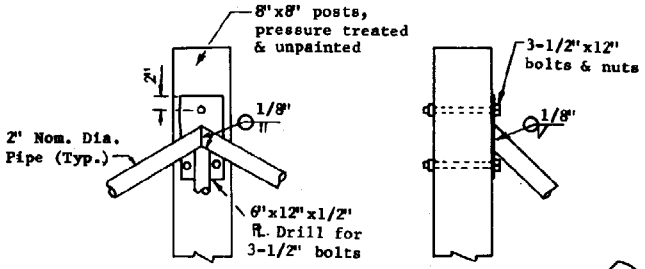

DETAIL NO.4

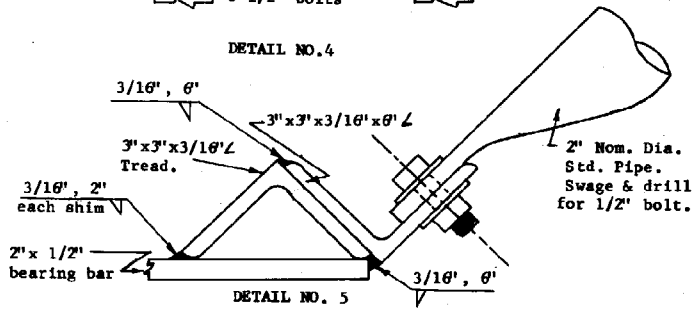

DETAIL NO. 5

*SHIM HEIGHT						
RAIL LBS./YD.						
80	90	110	115	119	131	150
2 1/4"	2 7/8"	3 1/2"	3 7/8"	4 1/16"	4 3/8"	4 9/16"
5/8" DIA. GALV. DOME HEAD SPIKE LENGTH						
11"	11"	11"	11"	13"	13"	13"

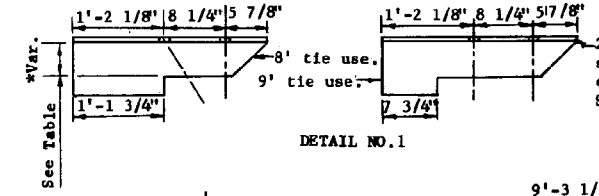

DETAIL NO.1

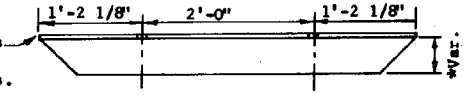

DETAIL NO.2

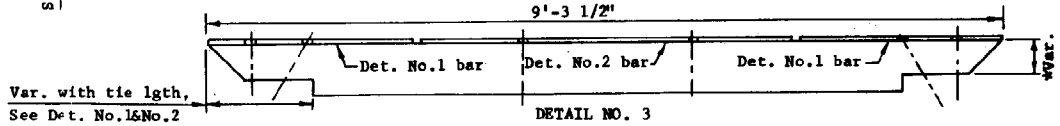

DETAIL NO. 3

CENTER SECTION FOR DOUBLE TRACKS ON 15' CENTERS

GENERAL NOTES

1. This design applicable only to wood tie track construction. Wood shims shall be unpainted and cut from material meeting the specifications of the existing ties.
2. 3"x3"x3/16" treads, 2"x1/2" bearing bars and 2" nom. dia. pipe wing assemblies shall be primed with one coat on No. 1 paint and finished with two coats of yellow enamel paint.

DESIGN APPROVED / APPROVED FOR DISTRIBUTION	STATE OF ARIZONA DEPARTMENT OF TRANSPORTATION DIVISION OF HIGHWAYS STANDARD DRAWINGS	REV. 1/83
	CATTLE GUARD, RAILROAD	DRAWING NO. C-11.30

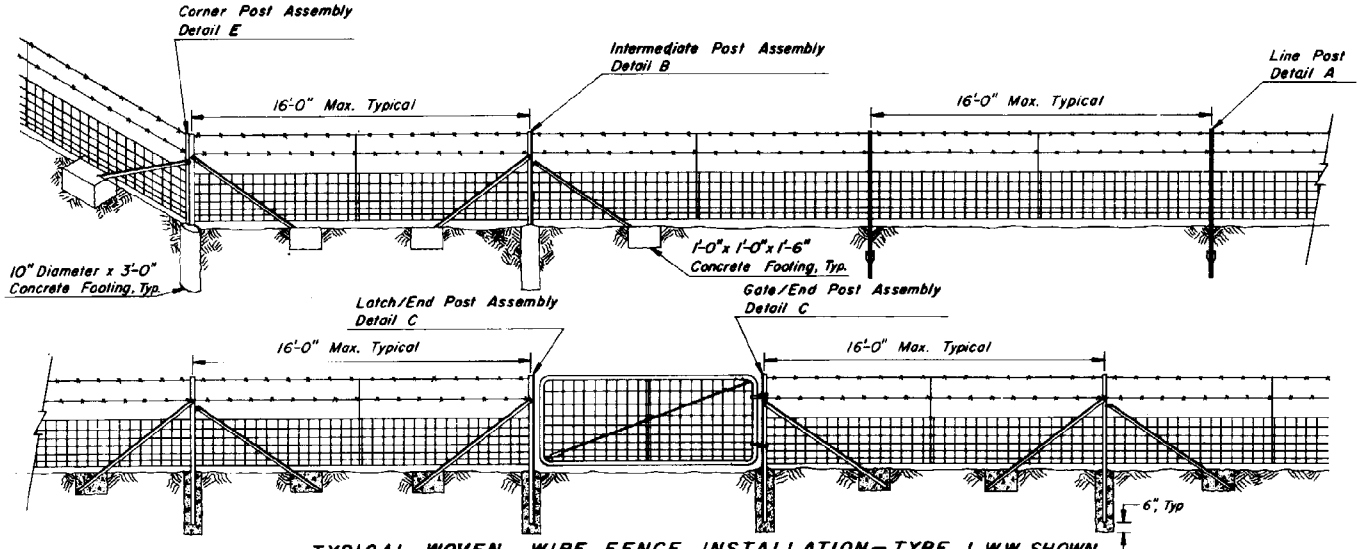

TYPICAL WOVEN WIRE FENCE INSTALLATION—TYPE 1 WW SHOWN

GENERAL NOTES

1. Length of post and braces shall not be less than 7'-0"
2. Woven wire fence fabric shall be attached to the post at the top, bottom, and intermediate wires.
3. Intermediate Post Assemblies shall be located as shown and at intervals to utilize standard rolls to minimize cutting and waste.
4. A twisted wire stay shall be centered between posts.

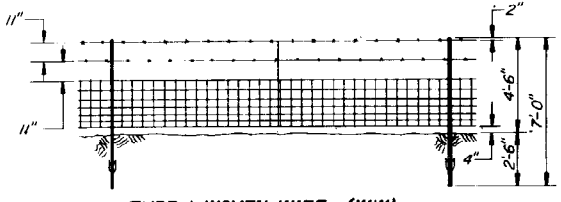

TYPE 1 WOVEN WIRE (WW)

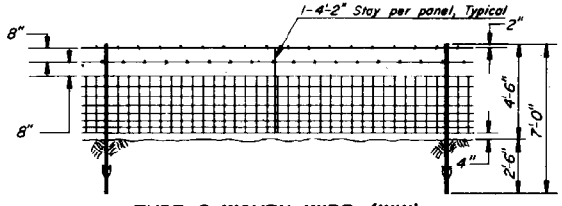

TYPE 2 WOVEN WIRE (WW)

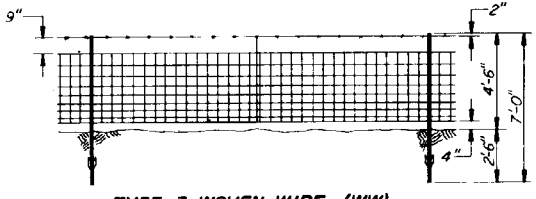

TYPE 3 WOVEN WIRE (WW)

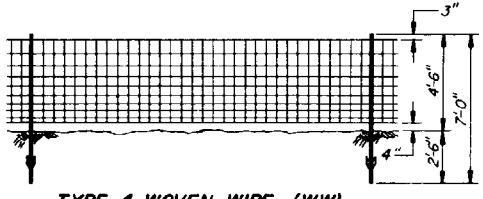

TYPE 4 WOVEN WIRE (WW)

FENCE FABRIC DIMENSIONS AND DESIGN NUMBERS

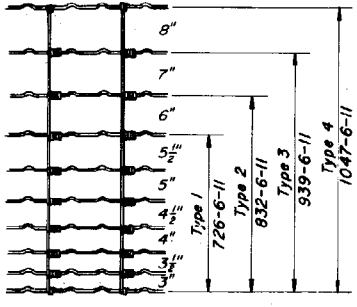

DESIGN APPROVED	STATE OF ARIZONA DEPARTMENT OF TRANSPORTATION DIVISION OF HIGHWAYS STANDARD DRAWINGS	REV. 5/85
APPROVED FOR DISTRIBUTION	Fence, Woven Wire	DRAWING NO. C-12.10 Sheet 1 of 5

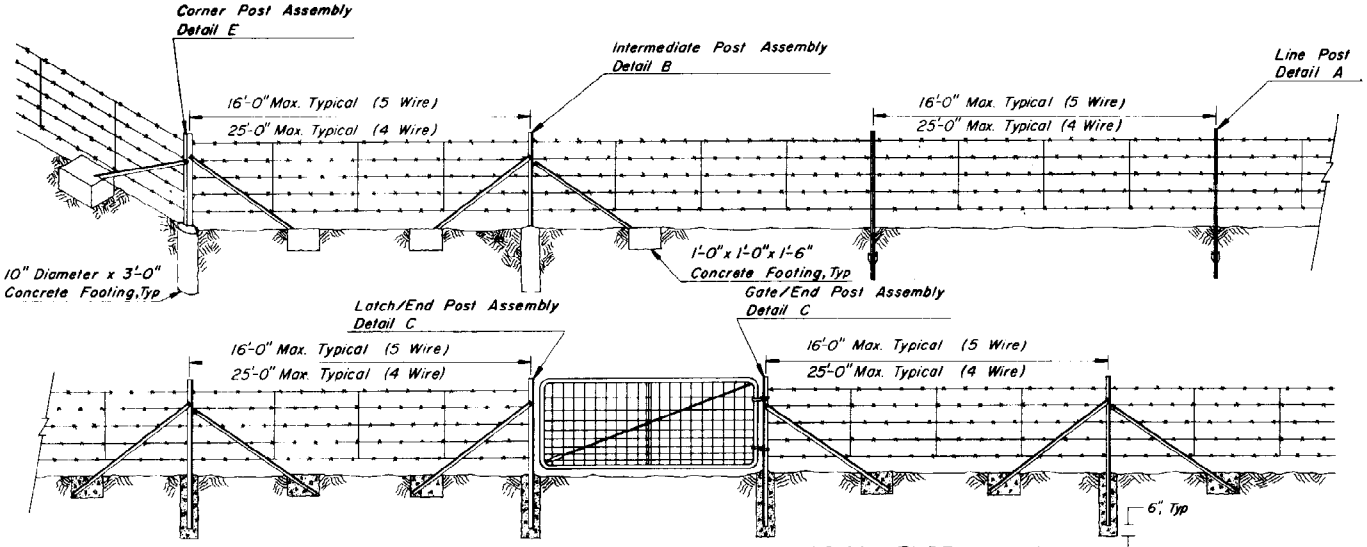

TYPICAL BARBED WIRE FENCE INSTALLATION—TYPE 2 BW SHOWN

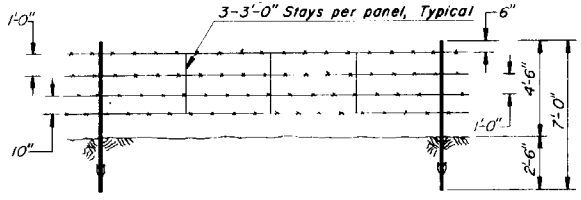

TYPE 1 BARBED WIRE (BW) (4 WIRE)

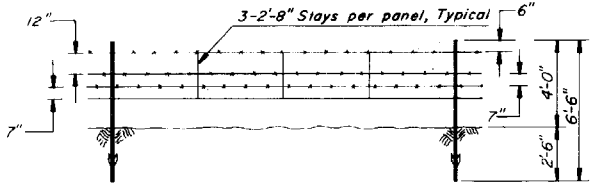

BARBED WIRE GAME FENCE (GF)

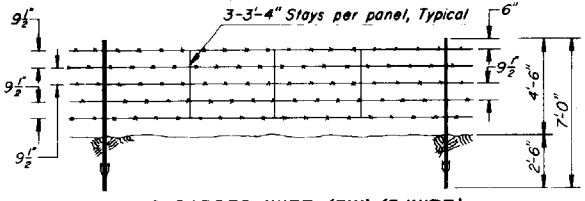

TYPE 2 BARBED WIRE (BW) (5 WIRE)

GENERAL NOTES

1. Intermediate Post Assemblies shall be located as shown and at intervals not to exceed 650', or midway between all braced posts.
2. For game fence the bottom wire shall be barbless.
3. The stays on game fence shall have their ends turned up, to prevent injuries to game.

DESIGN APPROVED	STATE OF ARIZONA DEPARTMENT OF TRANSPORTATION DIVISION OF HIGHWAYS STANDARD DRAWINGS	REV. 5/85
APPROVED FOR DISTRIBUTION	Fence, Barbed Wire	DRAWING NO. C-12.10 Sheet 2 of 5

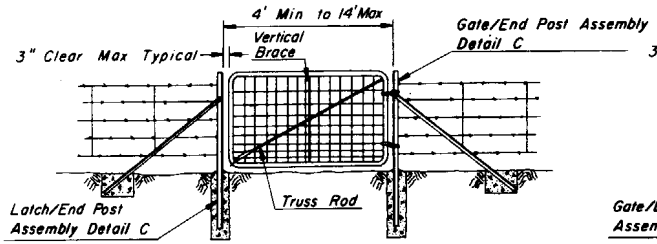

TYPE 1 SINGLE GATE

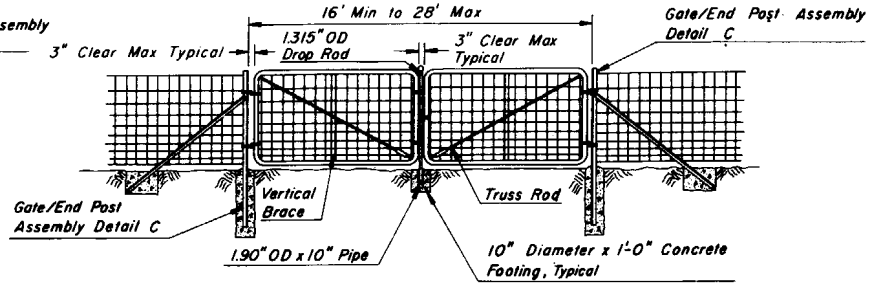

TYPE 1 DOUBLE GATE

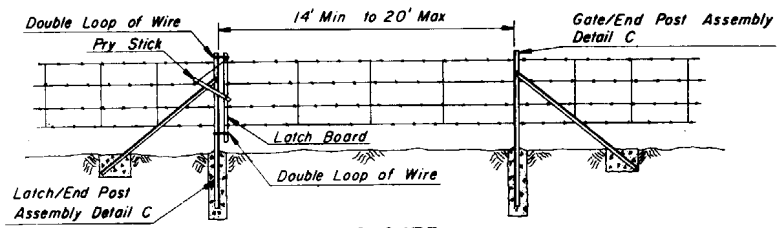

TYPE 2 GATE

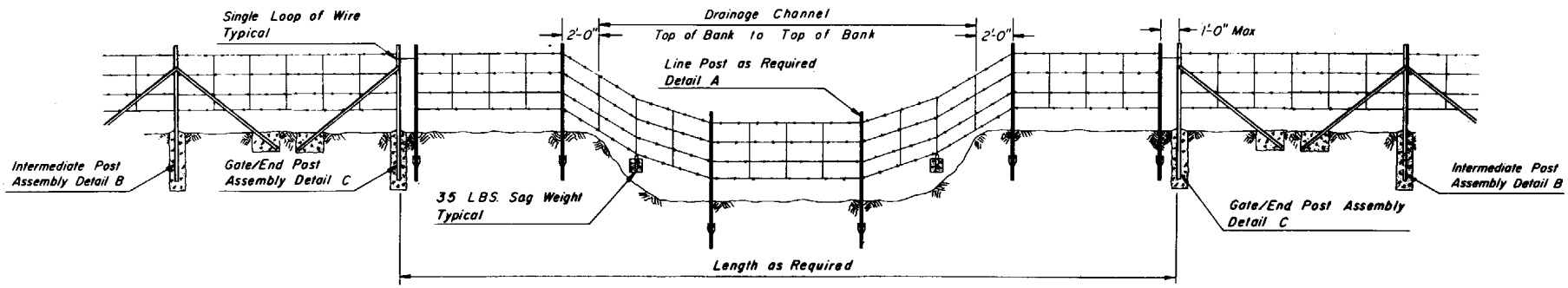

FLOOD GATE

DESIGN APPROVED	STATE OF ARIZONA DEPARTMENT OF TRANSPORTATION DIVISION OF HIGHWAYS STANDARD DRAWINGS	REV. 3-88
APPROVED FOR DISTRIBUTION	Fence, Gate, Type 1 & 2, Flood Gate	DRAWING NO. C-12.10 Sheet 3 of 5

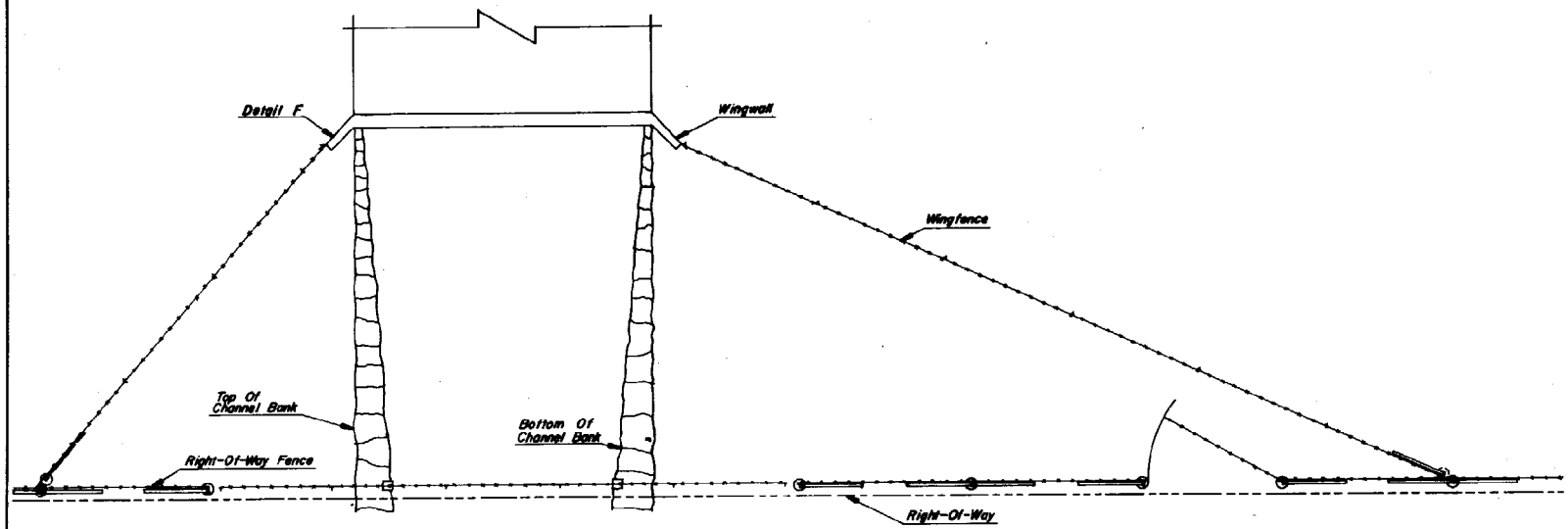

PLAN

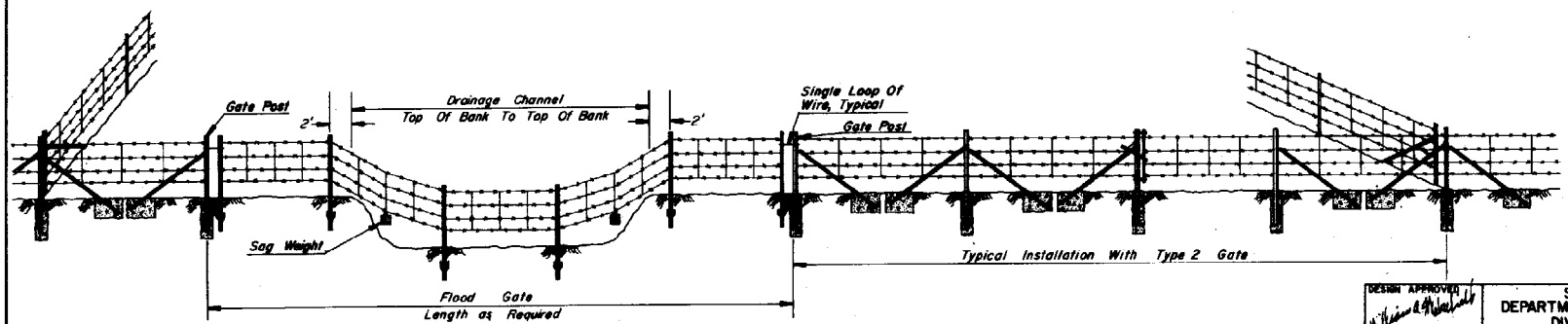

ELEVATION

TYPICAL FLOOD GATE INSTALLATION

DESIGN APPROVED	STATE OF ARIZONA DEPARTMENT OF TRANSPORTATION DIVISION OF HIGHWAYS STANDARD DRAWINGS	REV. 5/65
APPROVED FOR DISTRIBUTION	Fence, Flood Gate Installation	DRAWING NO. C-12.10 Sheet 4 of 5

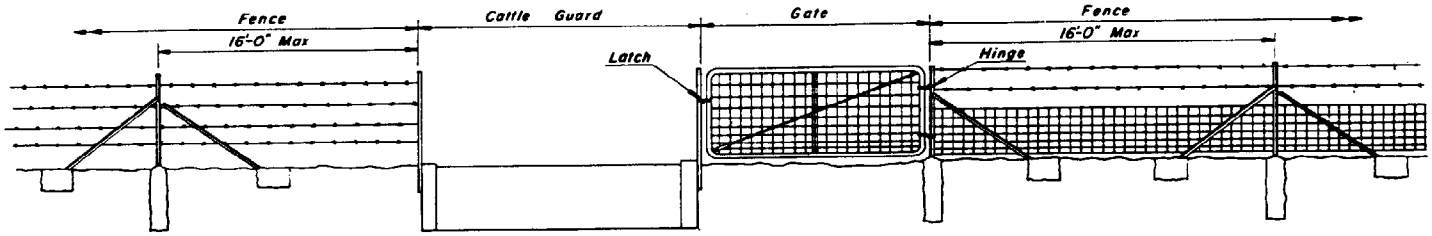

WITHOUT GATE

WITH GATE

TYPICAL FENCE INSTALLATION AT CATTLE GUARD

DETAIL A

TYPICAL CROSS SECTIONS OF LINE POST SHAPES

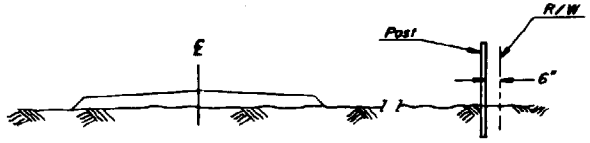

TYPICAL FENCE LOCATION

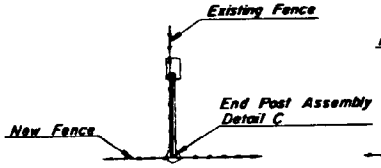

ABUTTING FENCE

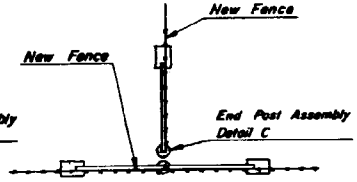

ABUTTING FENCE AT POST

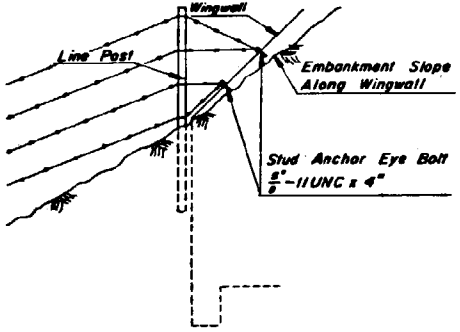

DETAIL F

FENCE CONNECTION TO WINGWALL

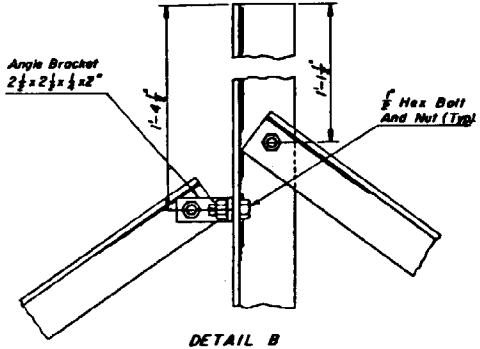

DETAIL B

INTERMEDIATE POST ASSEMBLY

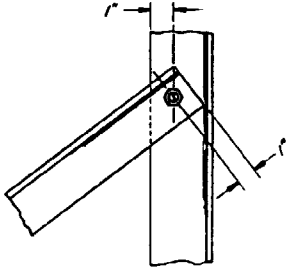

DETAIL C

END POST ASSEMBLY

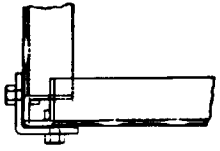

DETAIL E

CORNER POST ASSEMBLY

POST ASSEMBLIES:
UPRIGHT ANGLES $2\frac{1}{2} \times 2\frac{1}{2} \times \frac{1}{4}$ AT 4.10 LBS./FT., BRACE ANGLES $2 \times 2 \times \frac{1}{4}$ AT 3.19 LBS./FT.

DESIGN APPROVED	STATE OF ARIZONA DEPARTMENT OF TRANSPORTATION DIVISION OF HIGHWAYS STANDARD DRAWINGS	REV. 3/87
APPROVED FOR DISTRIBUTION	Fence, Misc. Details	DRAWING NO. C-12.10 Sheet 5 of 5

NO.	DESCRIPTION OF REVISIONS
1	Modified Note, Increased Thickness Of Terminal Post

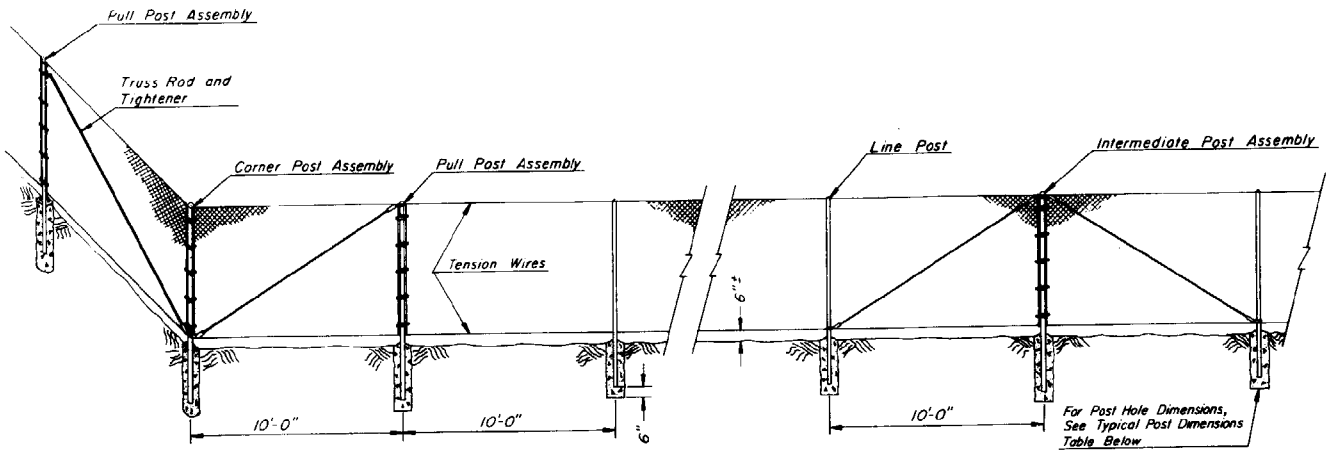

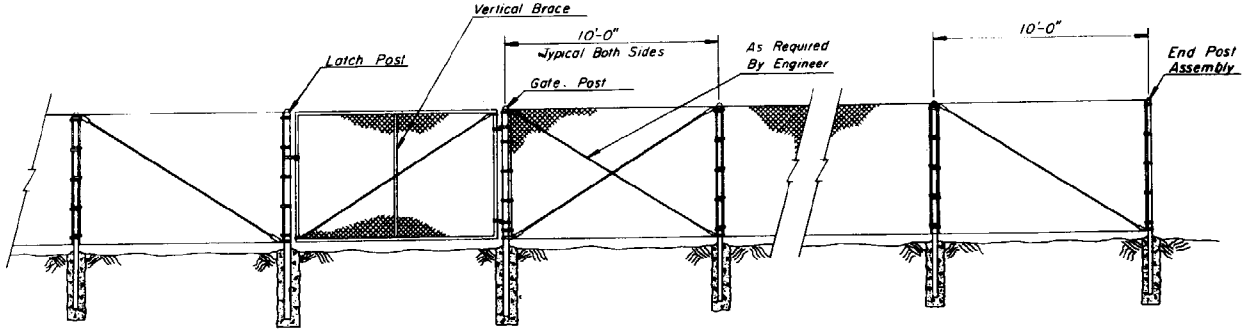

TYPICAL CHAIN LINK FENCE INSTALLATION – TYPE I SHOWN

TYPICAL POST DIMENSIONS

	CORNER, END, INTERMEDIATE, GATE, LATCH AND PULL POSTS					LINE POSTS				
FABRIC		POST HOLE	ROUND	ROLL	FORMED		POST HOLE	ROUND	H-	ROLL FORMED
HEIGHT	LENGTH	DIA. x DEPTH	(O.D.)	⊏	□	LENGTH	DIA. x DEPTH	(O.D.)	SECTION	□
36"	6'-0"	10" x 3'-0"	2.375"	3.50" x 3.50"	2.25" x 1.70"	5'-6"	10" x 2'-6"	1.900"	1.875" x 1.625"	1.875" x 1.625"
48"	7'-0"	10" x 3'-0"	2.375"	3.50" x 3.50"	2.25" x 1.70"	6'-6"	10" x 2'-6"	1.900"	1.875" x 1.625"	1.875" x 1.625"
60"	8'-0"	10" x 3'-0"	2.375"	3.50" x 3.50"	2.25" x 1.70"	7'-6"	10" x 2'-6"	1.900"	1.875" x 1.625"	1.875" x 1.625"
72"	9'-0"	10" x 3'-0"	2.375"	3.50" x 3.50"	2.25" x 1.70"	8'-6"	10" x 2'-6"	1.900"	1.875" x 1.625"	1.875" x 1.625"
OVER 72"	HEIGHT + 3'-0"	12" x 3'-0"	2.875"	3.50" x 3.50"	2.50" x 2.50"	HEIGHT + 2'-6"	12" x 2'-6"	2.375"	2.25" x 2.00"	1.875" x 1.625"

GENERAL NOTES

1. Posts shall be round pipe, H-section, or roll-formed and shall conform to the nominal dimensional requirements shown on the plans. Dimensional tolerances for all shapes shall be according to ASTM A-500. In addition the material of which posts are fabricated shall have a nominal thickness, before galvanizing, of not less than 0.111" for line posts and 0.130" for terminal posts.
2. Chain link fabric shall be either zinc-coated or aluminum-coated steel wire fence fabric. Zinc-coated steel fabric shall conform to the requirements of ASTM A392, Class I coating. Aluminum-coated steel fabric shall conform to the requirements of ASTM A491, with a minimum weight of coating of 0.40 ounce per square foot of wire surface area. Fabric shall be 11 gauge for all fence fabric 60 inches or less in height and shall be 9 gauge for fabrics greater than 60 inches in height.
3. Tension wires shall be 7 gauge (0.177 inch diameter) coil spring steel wire with a minimum tensile strength of 75,000 pounds per square inch, and shall be zinc-coated or aluminum-coated.
4. Truss rods shall be 3/8 inch diameter adjustable rods. Truss tightener shall have a strap thickness of not less than 1/4 inch.
5. Stretcher bars shall be 3/16 inch by 3/4 inch steel flat bars. Stretcher bar bands shall be 1/8 inch by one inch preformed steel bands.
6. Bottom tension wire shall be 5 inches from top of crown on concrete footings.
7. Intermediate post assemblies shall be spaced at 500 foot intervals or midway between pull posts when the distance between such posts is less than 1,000 feet and more than 500 feet.
8. Typical fence location, see sheet 3 of 3.

DESIGN APPROVED	STATE OF ARIZONA DEPARTMENT OF TRANSPORTATION DIVISION OF HIGHWAYS STANDARD DRAWINGS	REV. 11-88
APPROVED FOR DISTRIBUTION	Fence, Chain Link Type I	DRAWING NO. C-12.20 Sheet 1 of 3

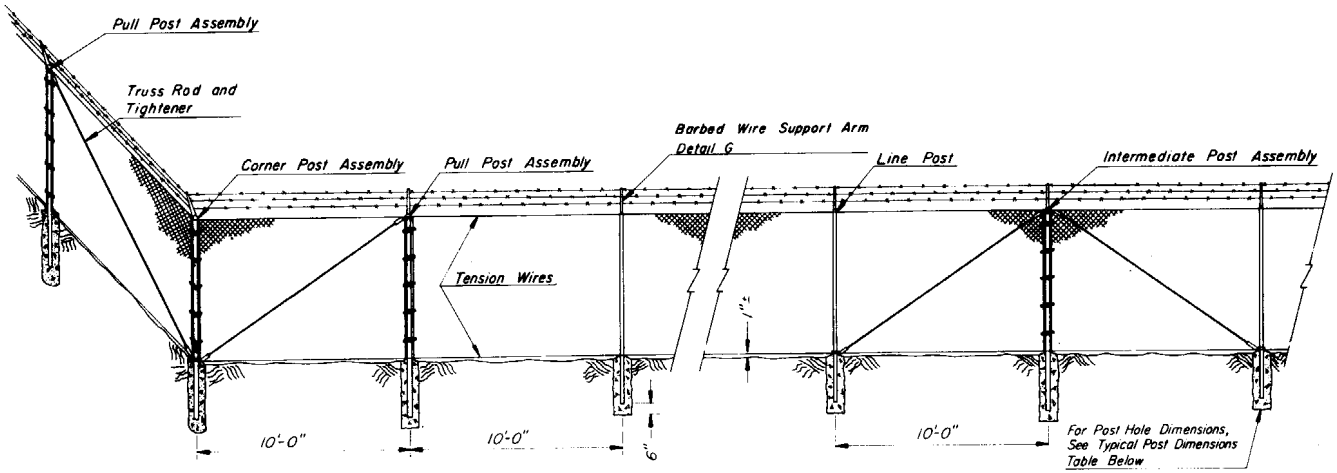

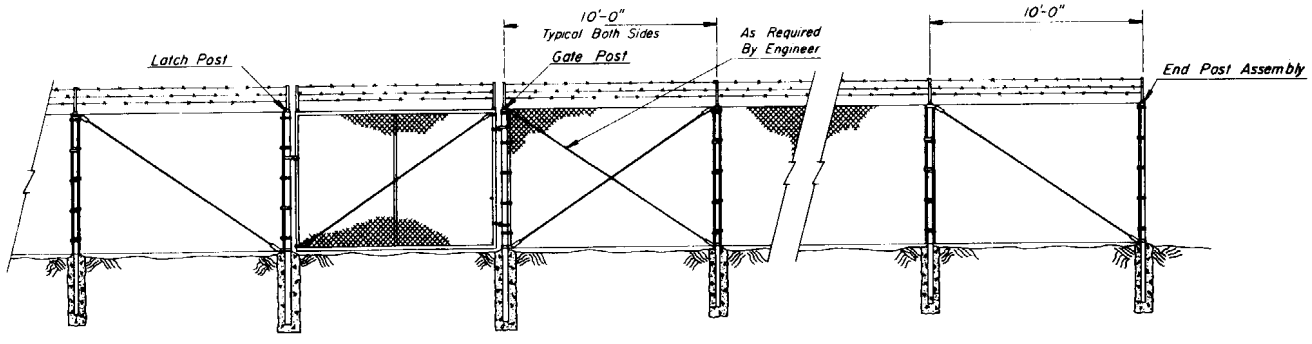

TYPICAL CHAIN LINK FENCE INSTALLATION – TYPE 2 SHOWN

GENERAL NOTES

1. Barbed wire for use with Type 2 chain link fence shall be 12– gauge steel wire with 4 point 14 gauge barbs spaced five inches apart and shall be either zinc-coated or aluminum coated. Zinc-coated steel wire shall conform to the requirements of ASTM A121, Class 1 coating. Aluminum-coated steel wire shall conform to the requirements of ASTM A585, Type 1, Class 1 coating.
2. Barbed wire support arm shall be of the type shown on the plans, shall be fabricated from commercial quality steel, and shall be zinc-coated in accordance with the requirements of AASHTO M111.
3. Bottom tension wire shall just clear top of crown on concrete footings.
4. For details and notes not shown – see chain link fence – Type 1.
5. Typical fence location – See sheet 3 of 3

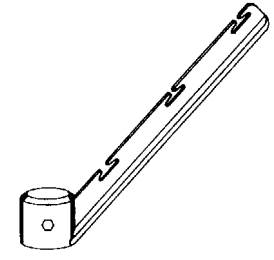

DETAIL G

BARBED WIRE SUPPORT ARM

TYPICAL POST DIMENSIONS

	CORNER, END, INTERMEDIATE, GATE, LATCH AND PULL POSTS					LINE POSTS				
FABRIC HEIGHT	LENGTH	POST HOLE DIA. x DEPTH	ROUND (O.D.)	ROLL FORMED ⊔	FORMED □	LENGTH	POST HOLE DIA x DEPTH	ROUND (O.D.)	H-SECTION	ROLL FORMED □
72"	9'-0"	10" x 3'-0"	2.375"	3.50" x 3.50"	2.50" x 2.50"	8'-0"	10" x 2'-6"	1.900"	1.875" x 1.625"	1.875" x 1.625"

DESIGN APPROVED	STATE OF ARIZONA DEPARTMENT OF TRANSPORTATION DIVISION OF HIGHWAYS STANDARD DRAWINGS	REV. 3-88
APPROVED FOR DISTRIBUTION	Fence, Chain Link Type 2	DRAWING NO. C-12.20 Sheet 2 of 3

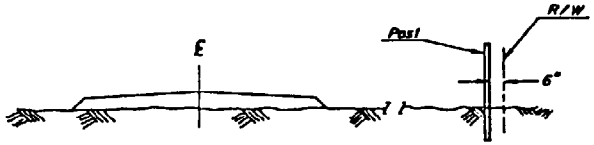

TYPICAL FENCE LOCATION

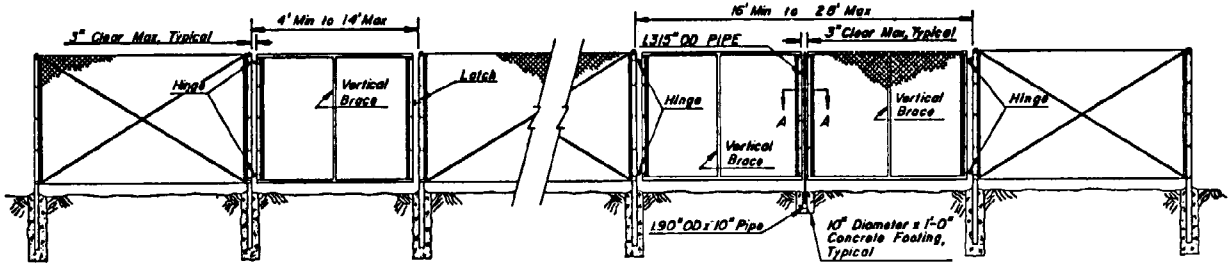

SINGLE GATE

DOUBLE GATE

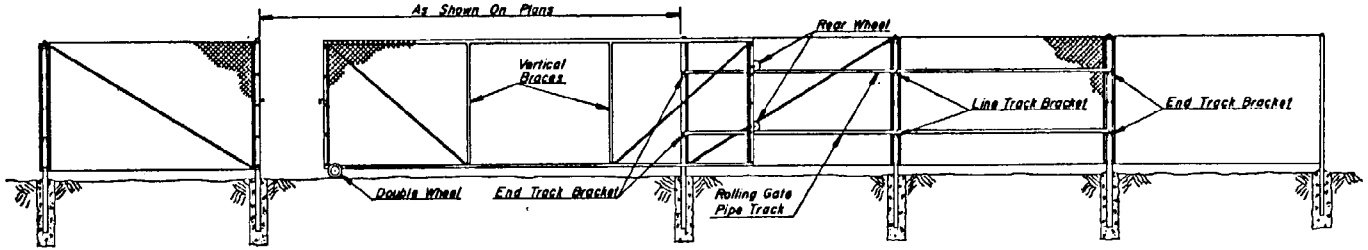

ROLLING GATE

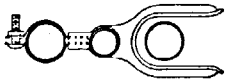

SECTION A-A

DOUBLE GATE LATCH ASSEMBLY

TYPICAL GATE DIMENSIONS

SINGLE AND DOUBLE SWING GATES						ROLLING GATES			
GATE LEAF WIDTH 6'H. OR LESS	VERTICAL BRACES	GATE POST SIZE O.D.	GATE LEAF WIDTH OVER 6'H.	VERTICAL BRACES	GATE POST SIZE O.D.	GATE LEAF WIDTH	NO. OF EQUALLY SPACED VERTICAL BRACES	TENSION RODS PER BRACED PANEL	GATE POST SIZE O.D.
3' to 8'	0	2.8750"	3' to 8'	0	2.8750"	6' to 13'	1	0	2.8750"
8' to 16'	1	4.0000"	8' to 16'	1	4.0000"	13' to 16'	1	1	2.8750"
16' to 18'	2	4.0000"	—	—	—	16' to 21'	2	1	2.8750"
—	—	—	—	—	—	21' to 27'	2	1	2.8750"
—	—	—	—	—	—	28' AND LARGER	3	1	2.8750"

GATES FOR CHAIN LINK FENCE—TYPE I SHOWN

(TYPE 2, WITH BARBED WIRE TYPICAL)

DESIGN APPROVED	STATE OF ARIZONA DEPARTMENT OF TRANSPORTATION DIVISION OF HIGHWAYS STANDARD DRAWINGS	REV. 8/87
APPROVED FOR DISTRIBUTION	Fence, Chain Link Gates	DRAWING NO. C-12.20 Sheet 3 of 3

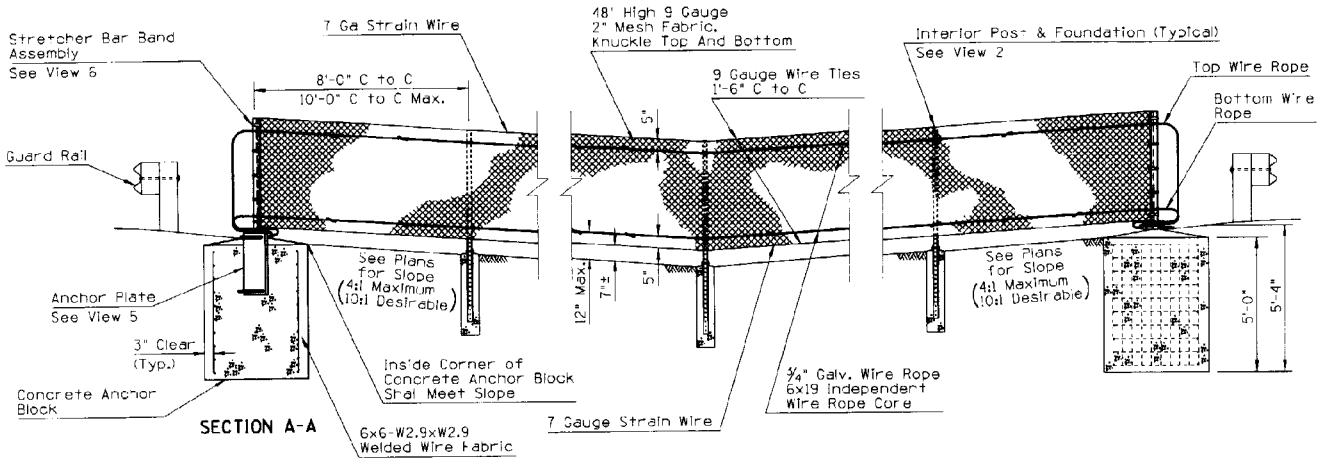

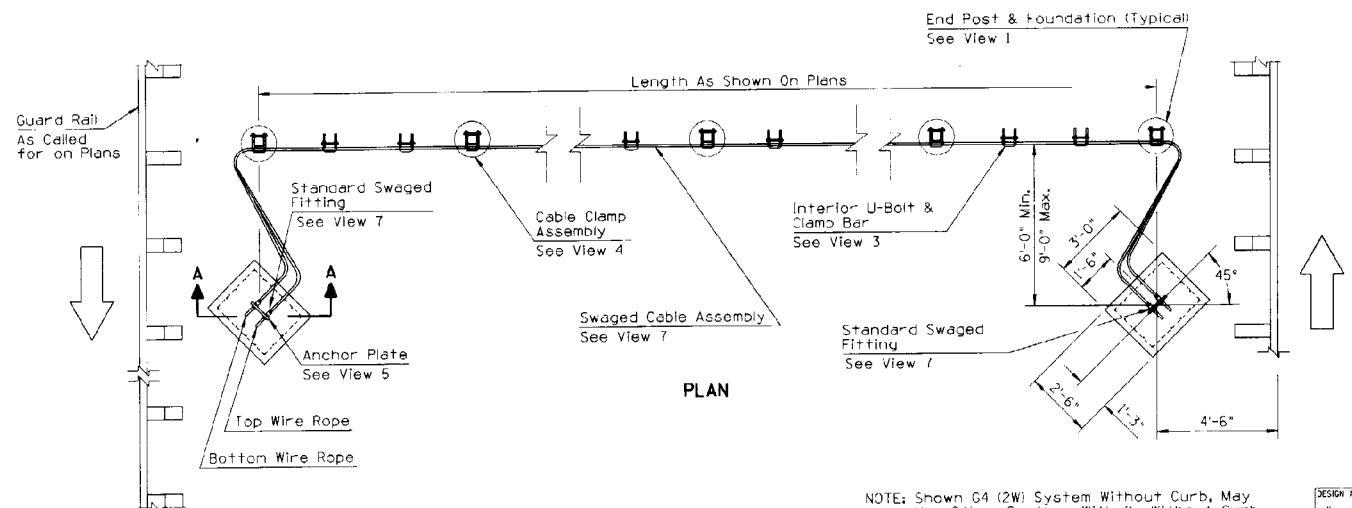

NOTE: Shown G4 (2W) System Without Curb. May Use Other Systems With Or Without Curb.

GENERAL NOTES

All concrete shall be Class S, 4000 psi.

All bolts, nuts, washers and fittings shall meet the dimensional requirements of the American National Standards Institute, unless otherwise designated and shall be galvanized in accordance with ASTM A153.

Galvanized swaged fitting and U-bolt shall conform to ASTM A449.

The 3/4" galvanized wire rope shall conform to AASHTO M30 Class B, Type 2.

The wire fabric, ties, bands, stretcher bars, and other fittings and hardware shall conform to ASSHTO M181.

The wire fabric fence shall follow contour of the graded median.

The excavation for the concrete anchor blocks shall be to neat lines. Maximum excess shall be 3".

Perforated posts shall be square tube formed from 0.105" USS guage ASTM A366 cold rolled carbon steel. The square tubes shall be welded directly in the corner by high frequency resistance welding or equal. The posts to be externally scarfed to agree with standard corner radii of 5/32 "±1/16".

Perforated posts shall be galvanized to the requirements of ASTM A525. Coating Designator shall be G-90.

The cables shall have enough tension to prevent sagging. The location of the concrete anchor blocks may also be varied to provide enough tension to help prevent sagging.

Two interior U-bolt and clamp bars shall be spaced at 1/3 of the distance between posts.

See Standard C12.20 for 48" fabric details.

An alternate to rectangular concrete anchor block shall be a 36" diameter round footing with an additional depth of 4".

The median approach grade within 100'± of the Chain Link Cable Barrier should not exceed a grade break of 10 percent.

DESIGN APPROVED George R. Hale	STATE OF ARIZONA DEPARTMENT OF TRANSPORTATION DIVISION OF HIGHWAYS STANDARD DRAWINGS	10/69
APPROVED FOR DISTRIBUTION	CHAIN LINK CABLE BARRIER	DRAWING NO. C-12.30 Sheet 1 of 3

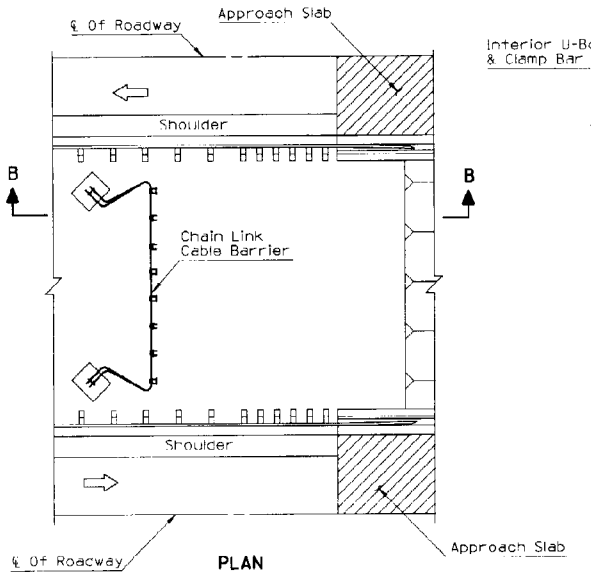

PLAN

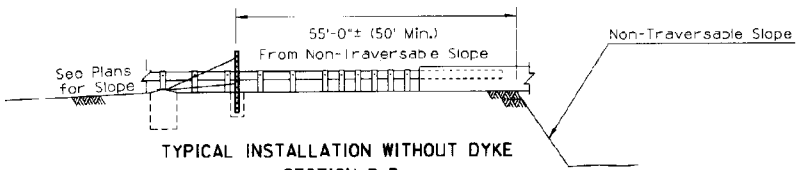

TYPICAL INSTALLATION WITHOUT DYKE
SECTION B-B

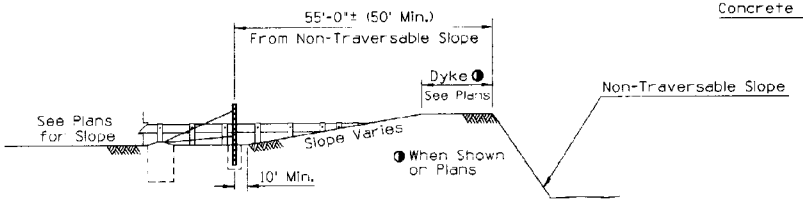

TYPICAL INSTALLATION WITH DYKE
SECTION B-B

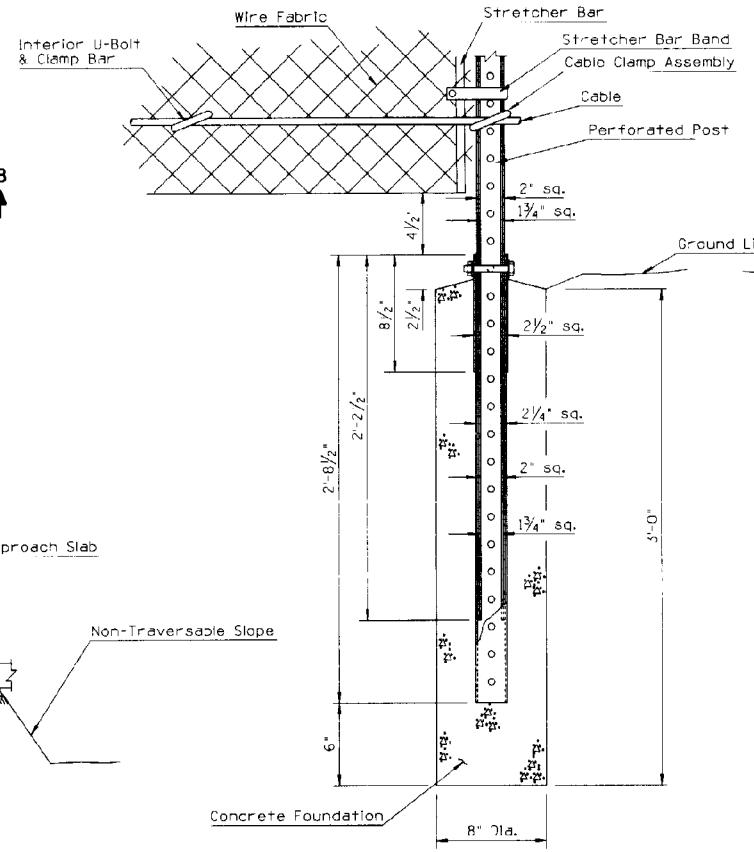

VIEW 1
END POST & FOUNDATION

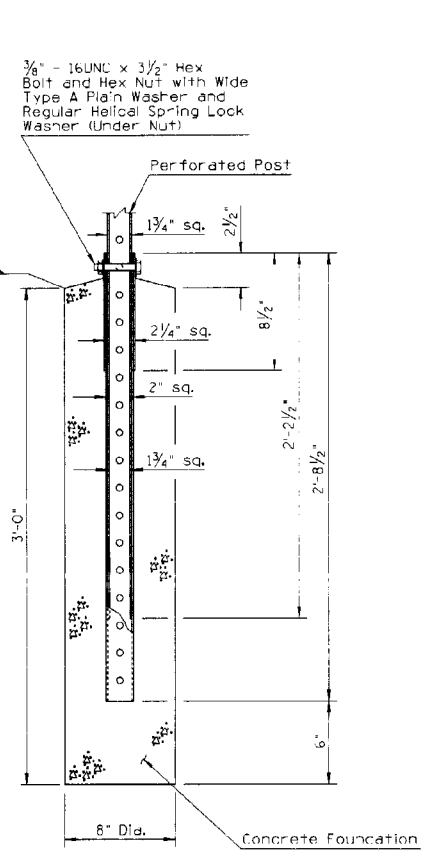

VIEW 2
INTERIOR POST & FOUNDATION

DESIGN APPROVED George R. Hale	STATE OF ARIZONA DEPARTMENT OF TRANSPORTATION DIVISION OF HIGHWAYS STANDARD DRAWINGS	10/89
APPROVED FOR DISTRIBUTION	CHAIN LINK CABLE BARRIER	DRAWING NO. C-12.30 Sheet 2 of 3

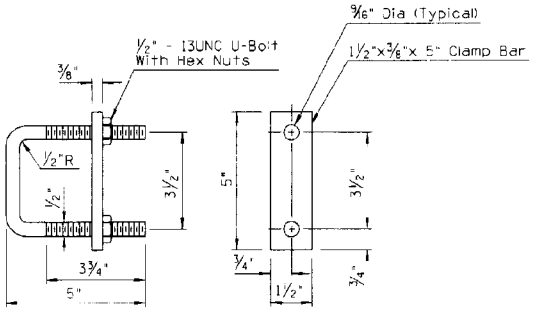

VIEW 3
U-BOLT & CLAMP BAR

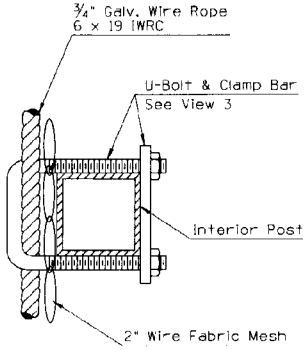

VIEW 4
CABLE CLAMP ASSEMBLY

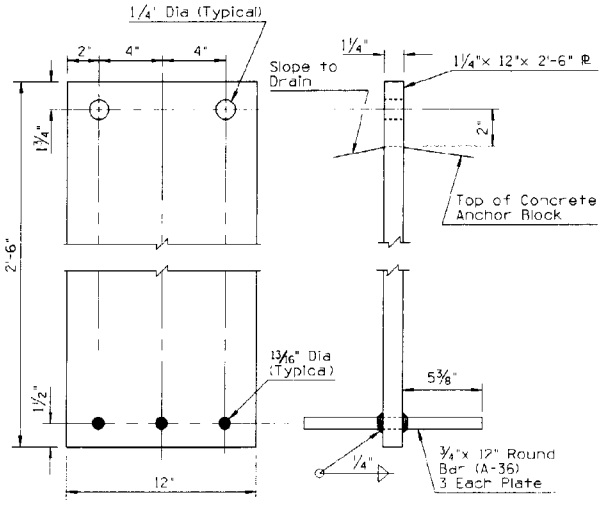

VIEW 5
ANCHOR PLATE

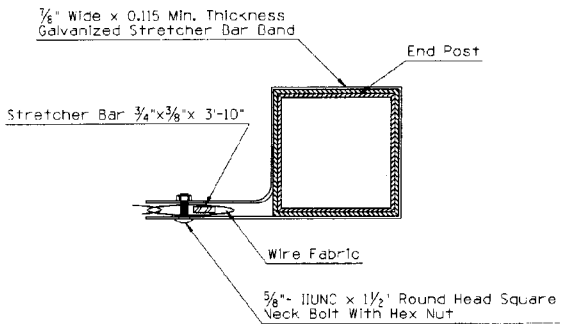

VIEW 6
STRETCHER BAR BAND ASSEMBLY

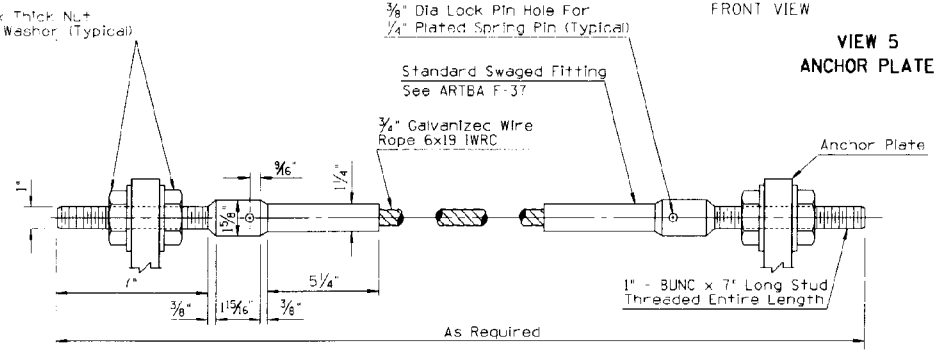

VIEW 7
SWAGED CABLE ASSEMBLY

DESIGN APPROVED *George R. Hale*	STATE OF ARIZONA DEPARTMENT OF TRANSPORTATION DIVISION OF HIGHWAYS STANDARD DRAWINGS	10/89
APPROVED FOR DISTRIBUTION	CHAIN LINK CABLE BARRIER	DRAWING NO. C-12.30 Sheet 3 of 3

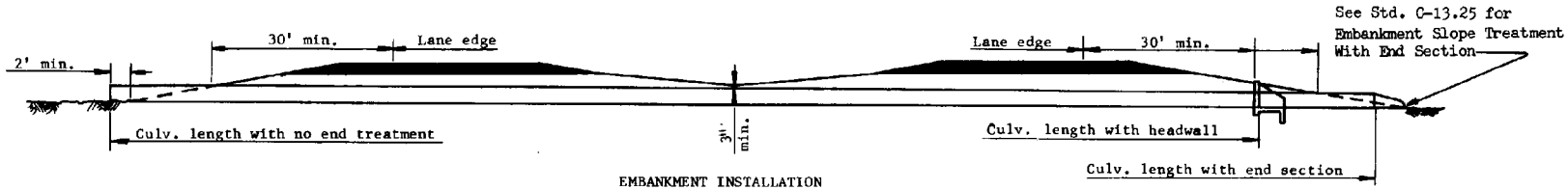

EMBANKMENT INSTALLATION
Divided Hwy. - 2 Way Rdwy. Similar

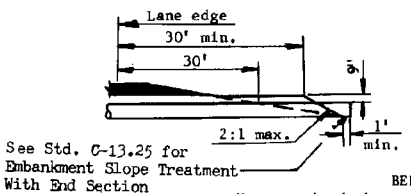

BERM
Not required when pipe projection is protected by guard rail

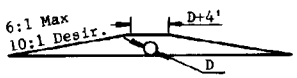

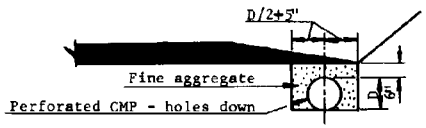

PERFORATED CMP INSTALLATION

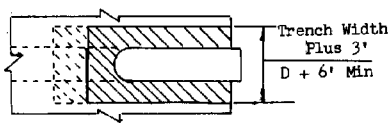

PLAN

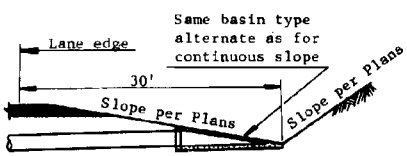

Sag Location

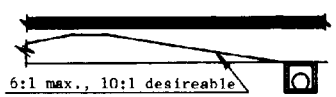

Continuous Slope Location

TRAFFIC - SAFE CUT DITCH INSTALLATION

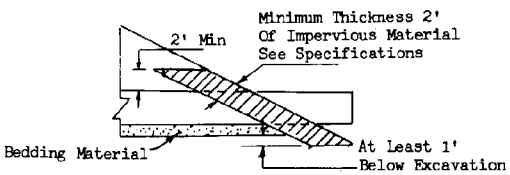

SECTION

PLATING SLOPES AT PIPE LOCATIONS

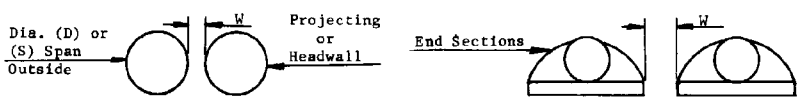

Dia. or Span	W Installation Type		
	Projecting	Headwall	End Sections
Less than 30"	12"	12"	12"
30" - 66"	(D or S)/2	(D or S)/2	12"
72" & Over	36"	36"	12"

MINIMUM SPACING FOR MULTIPLE INSTALLATIONS

GENERAL NOTES

1. Any required inlet and/or outlet protection shall be as called for on plans.
2. See also: C-14.00 and remaining C-13.00 series standards.
3. W Dimension applies to trench condition also.

DESIGN APPROVED	STATE OF ARIZONA DEPARTMENT OF TRANSPORTATION DIVISION OF HIGHWAYS STANDARD DRAWINGS	REV. 11/83
APPROVED FOR DISTRIBUTION	PIPE CULVERT INSTALLATION	DRAWING NO. C-13.10

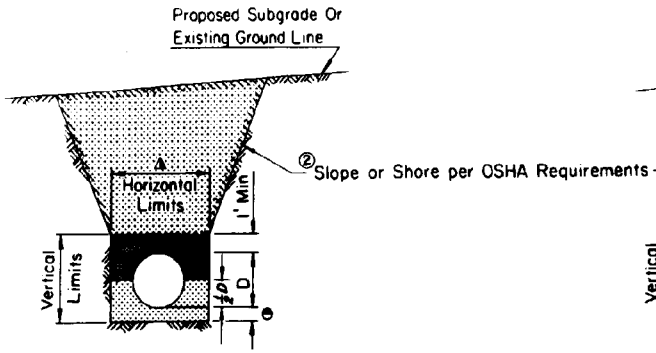

TRENCH CONDITION

IN NATURAL GROUND OR IN EMBANKMENT
WITHOUT BRACING

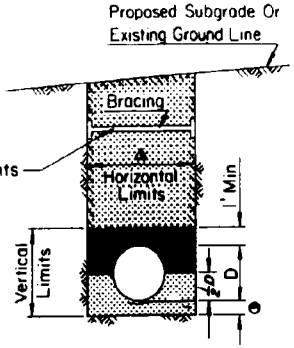

TRENCH CONDITION

IN NATURAL GROUND OR IN EMBANKMENT
WITH BRACING SHOWN

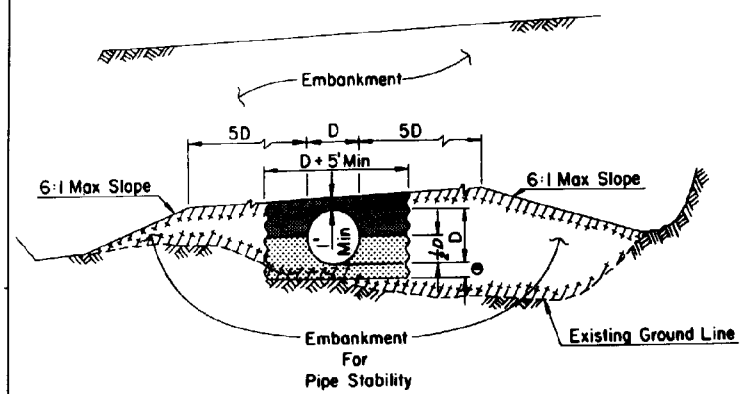

①NON - TRENCH CONDITION

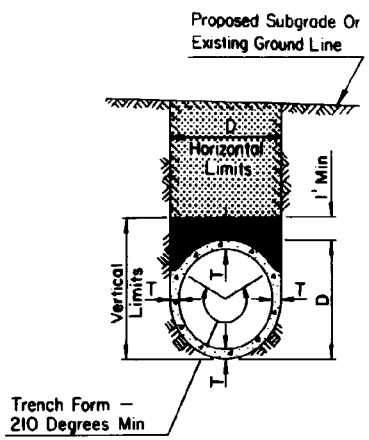

TRENCH CONDITION

NRCIPCP IN NATURAL GROUND
OR IN EMBANKMENT

GENERAL NOTES

1. Pipes shall be installed either in a trench condition or in a non - trench condition in natural ground or in an embankment.
2. In a trench condition, the vertical and horizontal limits shall be maintained, if horizontal limits are exceeded or the vertical limits are not maintained, a non - trench condition exists.
3. Bracing and sloping shall conform to OSHA requirements.
4. Pipe backfill may be bedding material

D — Outside diameter of full circle pipe or outside dimension (span or rise) of arch, arch pipe, elliptical pipe.

T — Minimum wall thickness for NRCIPCP, as per project plans.

Δ — D + 2 feet maximum for diameters up to 4 feet and D + 3 feet maximum for diameters 4 feet and over.

◓ — 6 inches except when on unyielding or unstable material, then as per the standard specifications.

NON - TRENCH CONDITION

TRENCH CONDITION

BEDDING

PIPE BACKFILL

TRENCH BACKFILL

DESIGN APPROVED	STATE OF ARIZONA DEPARTMENT OF TRANSPORTATION DIVISION OF HIGHWAYS STANDARD DRAWINGS	REV. 3-88
APPROVED FOR DISTRIBUTION	TYPICAL PIPE INSTALLATION	DRAWING NO. C-13.15

PIPE DIA.	APPROX. WEIGHT	DIMENSIONS - INCHES T	A	B	C	E	F	APPROX. SLOPE
24	1520#	3	9½	43½	30	73½	48	3
27	1930#	3¼	10½	49½	24	73½	54	3
30	2190#	3½	12	54	19¾	73¾	60	3
36	4100#	4	15	63	34¾	97¾	72	3
42	5380#	4½	21	63	35	98	78	3
48	6550#	5	24	72	26	98	84	3
54	8240#	5½	27	65	33½	98½	90	2½

GENERAL NOTES

Design of end section shall conform to standards for reinforced concrete pipe.

End section joint conformation shall match the pipe joints.

Embankment slope shall be warped to match slope of end section.

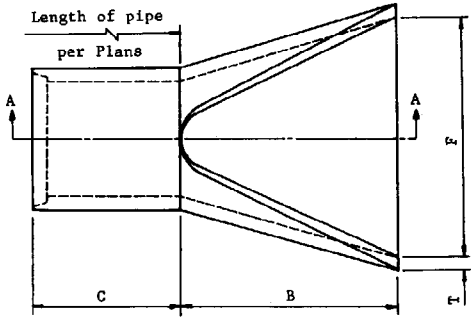

PLAN

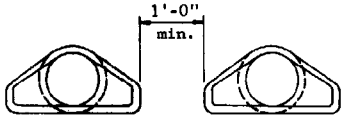

SPACING FOR MULTIPLE INSTALLATION

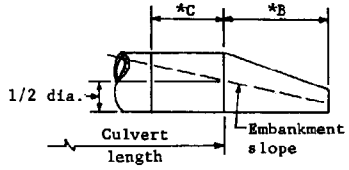

Right Angle Culvert

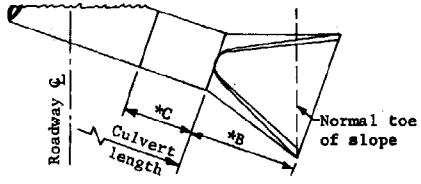

*See Table

Skewed Culvert

CULVERT LENGTH AS SHOWN ON PLANS

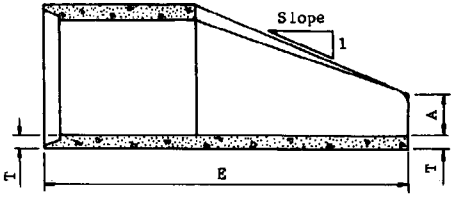

SECTION A-A

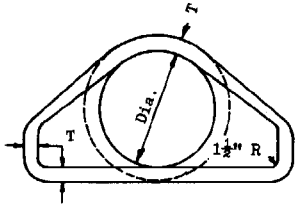

FRONT ELEVATION

DESIGN APPROVED	STATE OF ARIZONA DEPARTMENT OF TRANSPORTATION DIVISION OF HIGHWAYS STANDARD DRAWINGS	REV. 1/83
APPROVED FOR DISTRIBUTION	PIPE, REINFORCED CONCRETE END SECTION	DRAWING NO. C-13.20

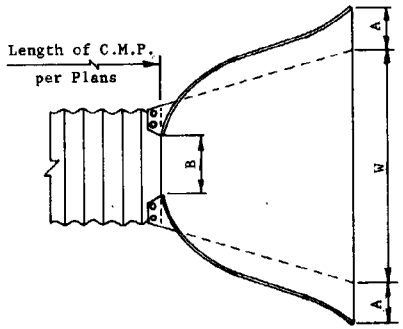

PIPE DIA.	GA.	DIMENSIONS - INCHES A ±1	B Max.	H ±1	L ±1½	W ±2	APPROX. SLOPE	CONNECTION TYPE
18"	16	8	10	6	31	36	2 1/2	1,2,3,4,5
24"	16	10	13	6	41	48	2 1/2	1,2,3,4,5
30"	14	12	16	8	51	60	2 1/2	1,2,4,5
36"	14	14	19	9	60	72	2 1/2	1,2,4,5
42"	12	16	22	11	69	84	2 1/2	1
48"	12	18	27	12	78	90	2 1/4	1
54"	12	18	30	12	84	102	2	1
60"	12,10	18	33	12	87	114	1 3/4	1
66"	12,10	18	36	12	87	120	1 1/2	1
72"	12,10	18	39	12	87	126	1 1/3	1
78"	12,10	18	42	12	87	132	1 1/4	1
84"	12,10	18	45	12	87	138	1 1/6	1

PIPE ARCH SPAN	RISE	GA.	DIMENSIONS - INCHES A ±1	B Max.	H ±1	L ±1½	W ±2	APPROX. SLOPE	CONNECTION TYPE
29"	18"	16	9	14	6	32	48	2 1/2	1,2,3,4,5
36"	22"	14	10	16	6	39	60	2 1/2	1,2,4,5
43"	27"	14	12	18	8	46	75	2 1/2	1,2,4,5
50"	31"	12	13	21	9	53	85	2 1/2	1
58"	36"	12	18	26	12	63	90	2 1/2	1
65"	40"	12	18	30	12	70	102	2 1/2	1
72"	44"	12	18	33	12	77	114	2 1/4	1

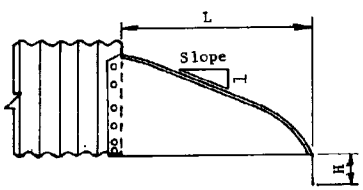

END SECTION DIMENSIONS
Riveted or Bolted Connections

TYPE 1

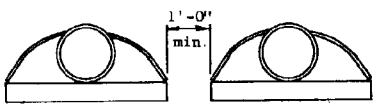

MULTIPLE INSTALLATION SPACING

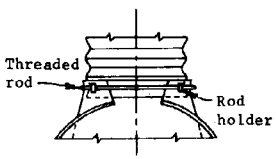

TYPE 2

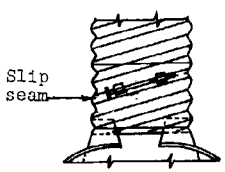

TYPE 5

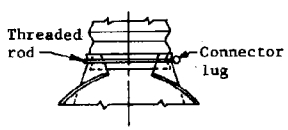

TYPE 3

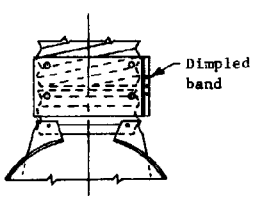

TYPE 4

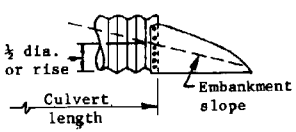

Right Angle Culvert

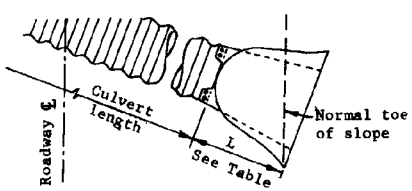

Skewed Culvert

CULVERT LENGTH AS SHOWN ON PLANS

GENERAL NOTES

The end section may be jointed to the pipe or connector section by bolts, rivets, dimpled bands, slip-seam bands or threaded rod type fasteners. For allowable connector types, see table.

The type 1 connector (far left) is by means of bolts or rivets. Maximum circumferential fastener spacing shall be 12" and with a minimum of 8 fasteners per joint. The Type 1 joint may be used with either annular or helical corrugations.

Type 2 and 3 connectors shall be used only with annular pipe or helical pipe with a requisite number of annular corrugations.

Type 4 and 5 connectors shall be used only with helical pipe.

All steel end section components shall be galvanized.

Toe of embankment shall be warped to match toe of skewed end sections.

A berm shall be added to abnormal projections per Std. C-13.10

The foregoing applies to all cross section configurations.

DESIGN APPROVED	STATE OF ARIZONA DEPARTMENT OF TRANSPORTATION DIVISION OF HIGHWAYS STANDARD DRAWINGS	REV. 1/83
APPROVED FOR DISTRIBUTION	PIPE, CORRUGATED METAL, END SECTION	DRAWING NO. C-13.25

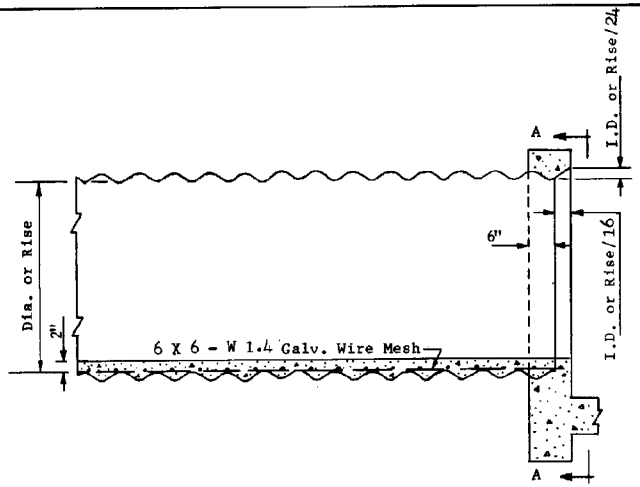

HEADWALL INSTALLATION

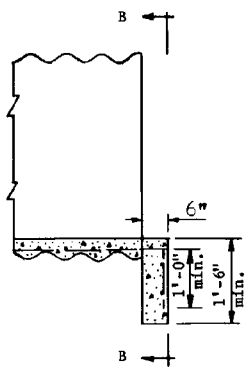

PROJECTING INSTALLATION

GENERAL NOTES

For lateral dimension of invert paving, use 72° control for CMP and span for CMPA.

Paving shall be scored longitudinally at 1'-6" min. lateral intervals.

Use bevel on inlet headwall only.

Wire mesh shall be fastened or welded to corrugation crests at intervals and in a manner approved by the Engineer. Laps shall be 6" min.

Paving shall not be placed until backfilling is completed.

Concrete shall be Class "B".

See Std. C-14.20 for headwall and bevel dimensions not shown.

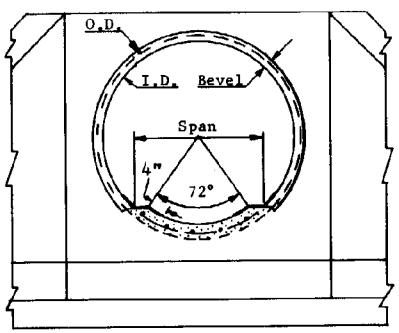

Elevation A-A

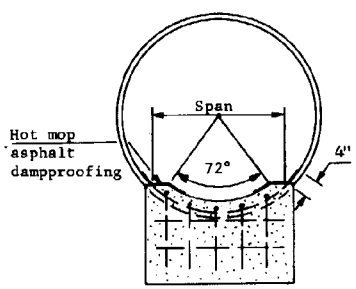

Elevation B-B

DESIGN APPROVED	STATE OF ARIZONA DEPARTMENT OF TRANSPORTATION DIVISION OF HIGHWAYS STANDARD DRAWINGS	REV. 1/83
APPROVED FOR DISTRIBUTION	PIPE & PIPE ARCH, CORRUGATED METAL CONCRETE INVERT PAVING	DRAWING NO. C-13.30

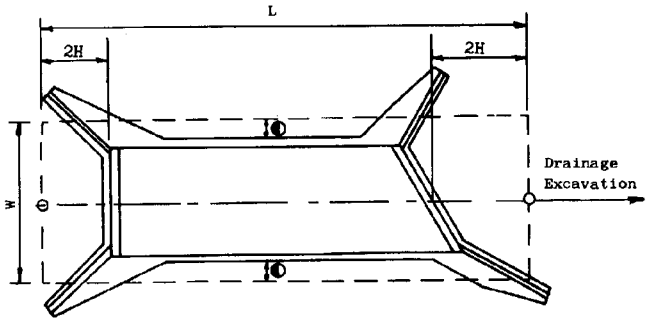

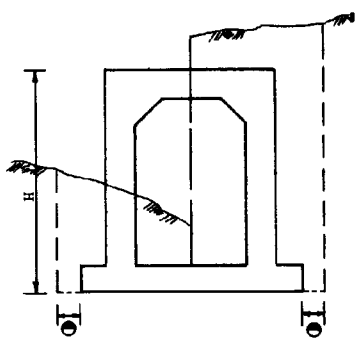

Concrete Box Culvert

GENERAL NOTES

1. Payment limits shown include structural excavation for headwalls, cutoff walls, wingwalls, end sections, etc.
2. W = Width
   L = Length
   H = Height of barrel or headwall w/o cutoff wall
3. ● 6" max in rock & trench.
   1'-6" max all others

DESIGN APPROVED	STATE OF ARIZONA DEPARTMENT OF TRANSPORTATION DIVISION OF HIGHWAYS STANDARD DRAWINGS	REV. 1/83
APPROVED FOR DISTRIBUTION	STRUCTURAL EXCAVATION PAYMENT LIMITS	DRAWING NO. C-13.35

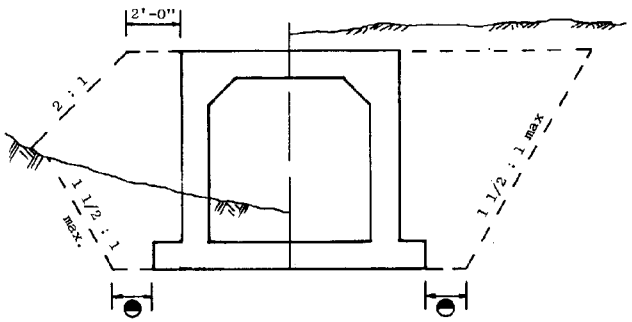

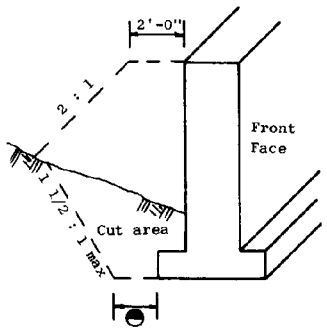

GENERAL NOTES

1. Placement of structure backfill around headwalls and wingwalls shall be the same as around structures.
2. ⊖ 6" min in rock & trench
   1'-6" min all others

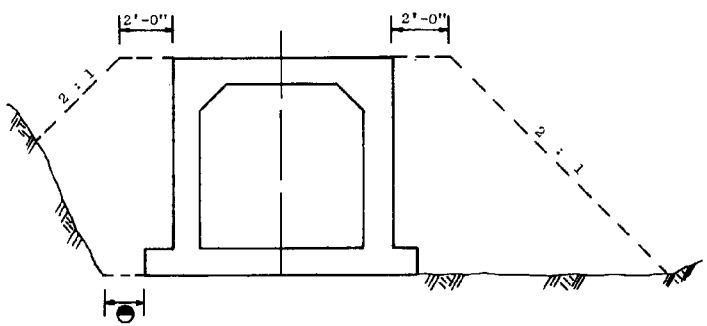

BARREL SECTION

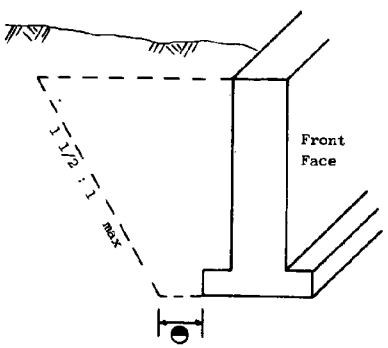

END VIEW WING OF BOX CULVERT

DESIGN APPROVED	STATE OF ARIZONA DEPARTMENT OF TRANSPORTATION DIVISION OF HIGHWAYS STANDARD DRAWINGS	REV 11/83
APPROVED FOR DISTRIBUTION	STRUCTURE BACKFILL PLACEMENT	DRAWING NO. C-13.45

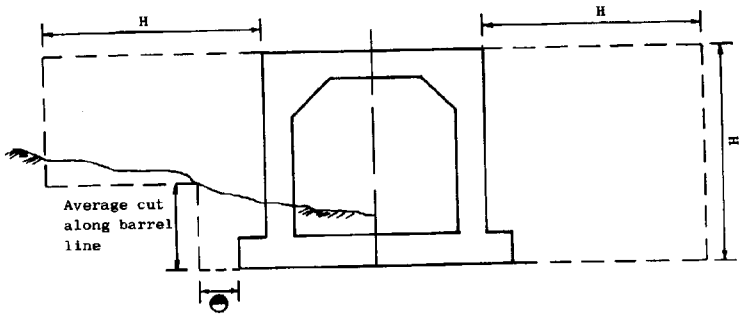

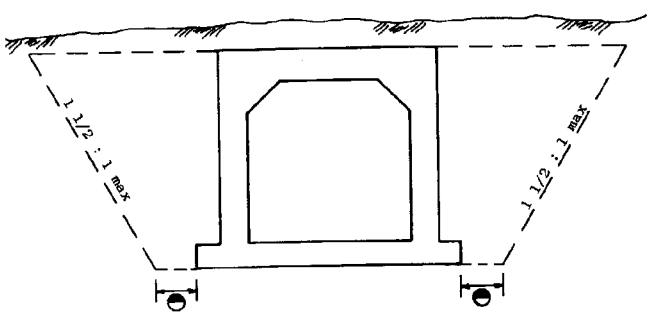

GENERAL NOTES

1. Computation of ▲ Structure Backfill quantities for box culverts is based on the area of a typical installation times((the total length of the structure plus 2H). No measurement is necessary for wing areas. Use H for box extensions on each end extended.
2. H = Height of barrel or headwall w/o cutoff wall.
3. ⊖ 6" max in rock & trench
   1'-6" max all others

DESIGN APPROVED	STATE OF ARIZONA DEPARTMENT OF TRANSPORTATION DIVISION OF HIGHWAYS STANDARD DRAWINGS	REV 11/83
APPROVED FOR DISTRIBUTION	STRUCTURE BACKFILL ▲ MEASUREMENT	DRAWING NO. C-13.50

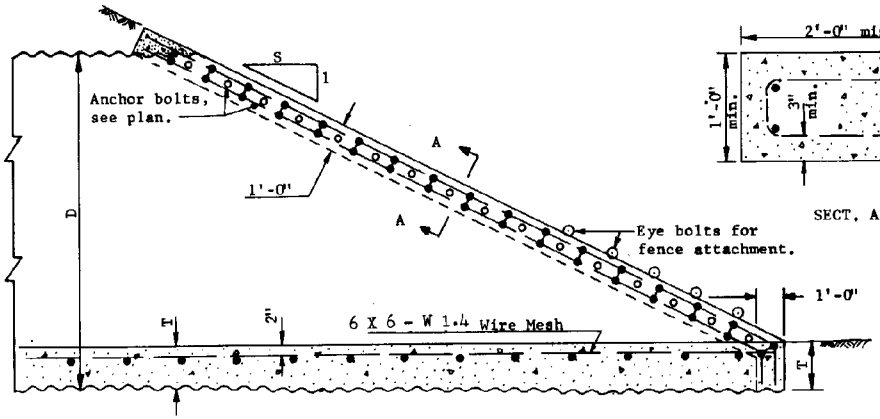

LONGITUDINAL SECTION

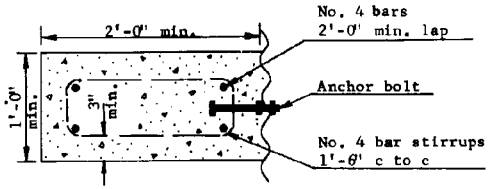

SECT. A-A

	D	T	S
Combination vehicle and cattle pass	144"	1'-6"	Varies
Cattle pass only	120"	6"	Varies

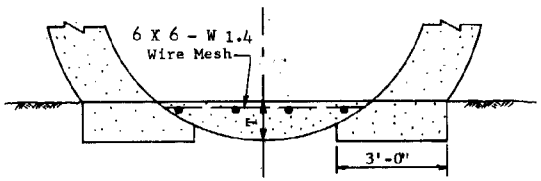

END ELEV.

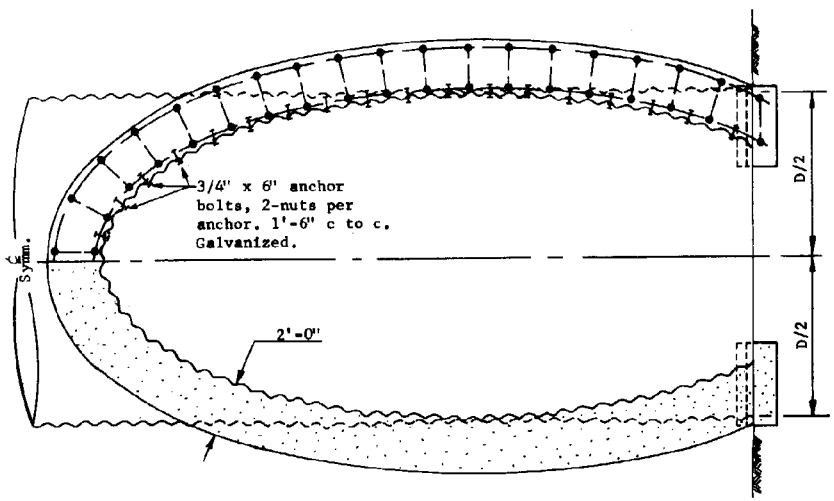

PLAN NORMAL TO SLOPE

GENERAL NOTES

This end treatment is to be used only for those cattle and/or vehicle passes not used for drainage.

All concrete shall be Class B. An optional 12" A.B. invert paving base course and 6" of concrete may be used in the 144" diameter pipe.

Anchor bolts shall be retained in a horizontal position during pour with final tightening a minimum of 7 days after pour.

Pipe shall be backfilled before concrete bond beam is constructed. Minimum forming may be used.

Edges of wire mesh shall be fastened or welded to corrugation crests at intervals and in a manner approved by the Engineer. Laps shall be 6" minimum.

For installation normal to roadway centerline only.

DESIGN APPROVED	STATE OF ARIZONA DEPARTMENT OF TRANSPORTATION DIVISION OF HIGHWAYS STANDARD DRAWINGS	REV. 1/83
APPROVED FOR DISTRIBUTION	PIPE, CATTLE-VEHICLE PASS, MITERED END TREATMENT	DRAWING NO. C-13.55

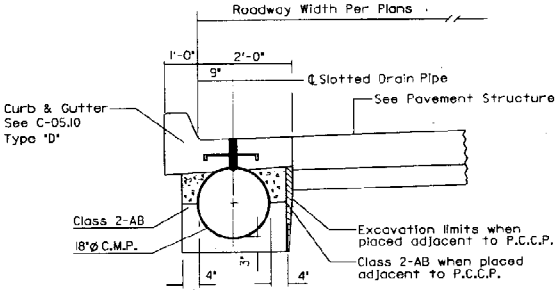

Type 'D' Curb and Gutter with Slotted Drain

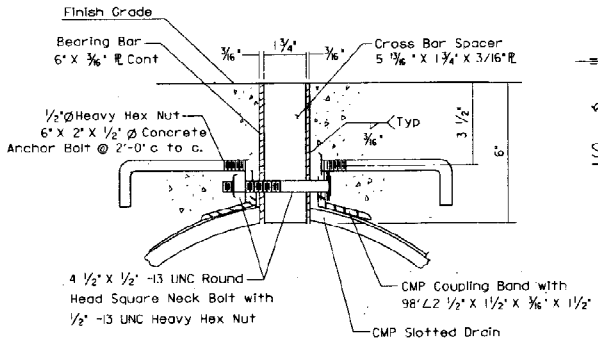

Section A-A

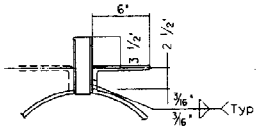

Section B-B

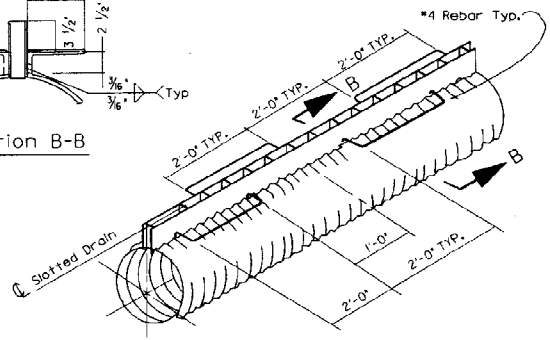

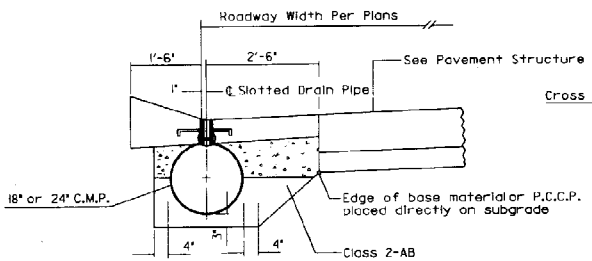

Type 'B' or 'C' Curb and Gutter with Slotted Drain

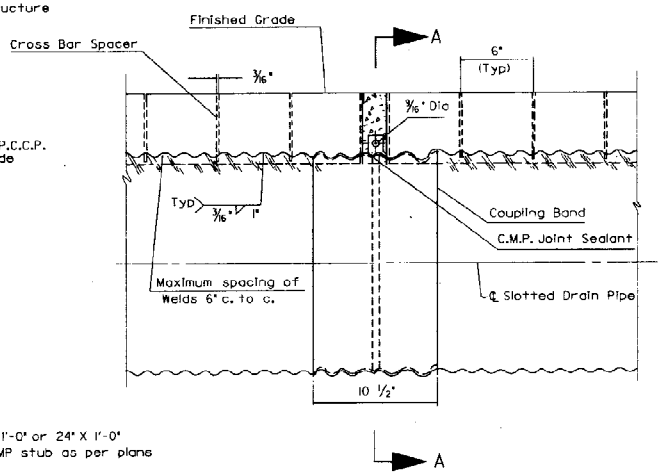

GENERAL NOTES

1. Slotted drain pipe shall be 2 2/3 X 1/2 corrugated steel pipe with a minimum wall thickness of 0.064 and shall conform to the requirements of AASTO M36.
2. All Concrete shall be Class 'B'
3. Reinforcing steel shall conform to 1003-1, 2, Grade 40.
4. Structural steel shall conform to ASTM A36.
5. Concrete anchors shall conform to ASTM A307 and hex nuts shall conform to ASTM A563 Grade A.
6. All slotted drain pipe hardware except anchor bolts and reinforcing steel shall be given two coats "Ipaint".
7. When annular pipe is used, apply water proof sealer before attaching coupling band.
8. When helical pipe is used, it shall be formed with at least one annular corrugation at each end of each pipe section. Water proof sealer shall be applied to the annular corrugation prior to attachment of coupling band.
9. Cover slot during construction with removable tape or other acceptable substitute.
10. Slotted drain pipe shall be clean at the time of final acceptance.
11. Concrete curb and gutter thru the slotted drains shall be paid for under the respective curb and gutter items.
12. Refer to curb and gutter details for dimensions and details not shown.
13. Joints in concrete curb & gutter shall match adjoining P.C.C.P. and slotted drain bands.

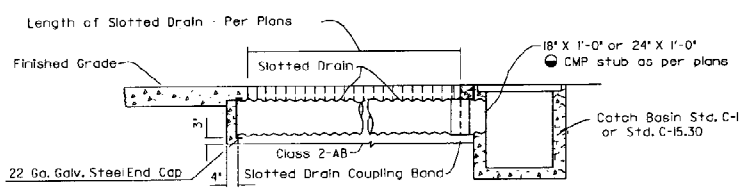

The 18" X 1'-0" or 24" X 1'-0" CMP stub shall be included in the price of respective catch basins.

Connection of Slotted Drain to Catch Basin and Slotted Drain End Cap

DESIGN APPROVED *George R. Hale*	STATE OF ARIZONA DEPARTMENT OF TRANSPORTATION DIVISION OF HIGHWAYS STANDARD DRAWINGS	10/89
APPROVED FOR DISTRIBUTION	SLOTTED DRAIN DETAILS	DRAWING NO. C-13.60

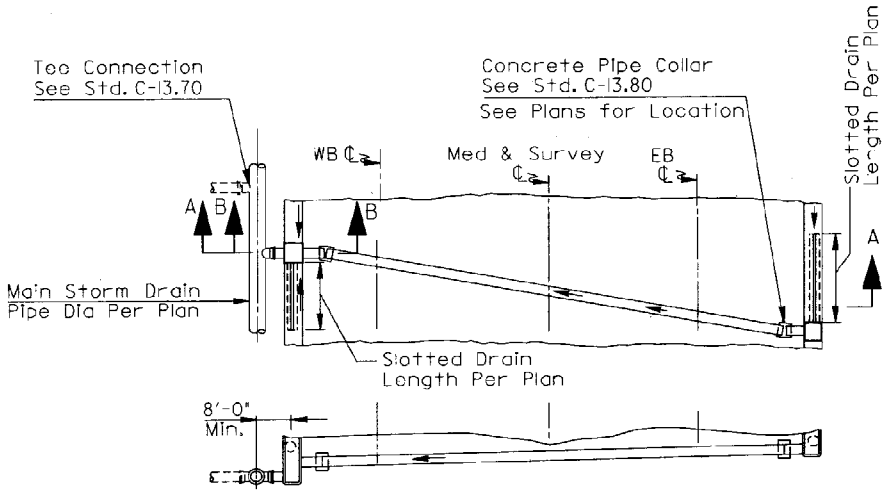

SECTION A-A

Typical Slotted Drain & Catch Basin Installation Without Manhole

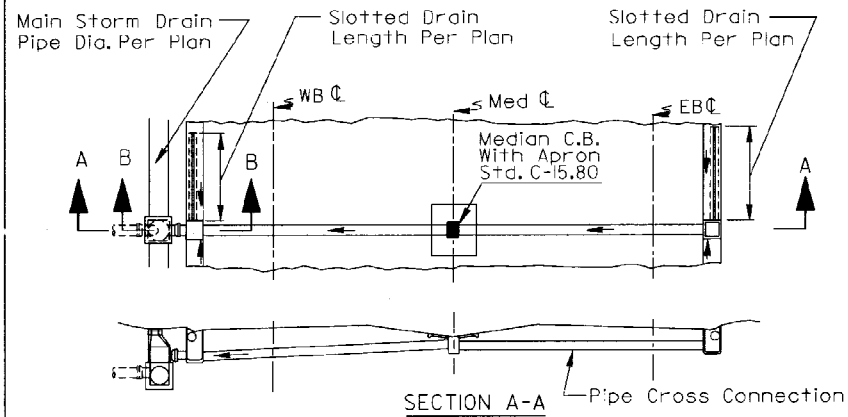

SECTION A-A

Typical Slotted Drain & Catch Basin Installation With Manhole

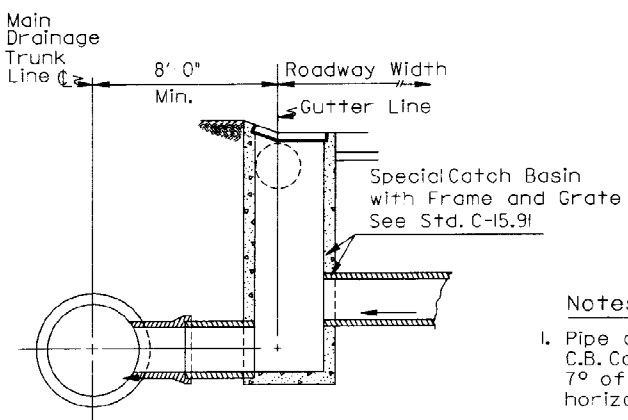

SECTION B-B

Typical Connection Between C.B. & Main Storm Drain

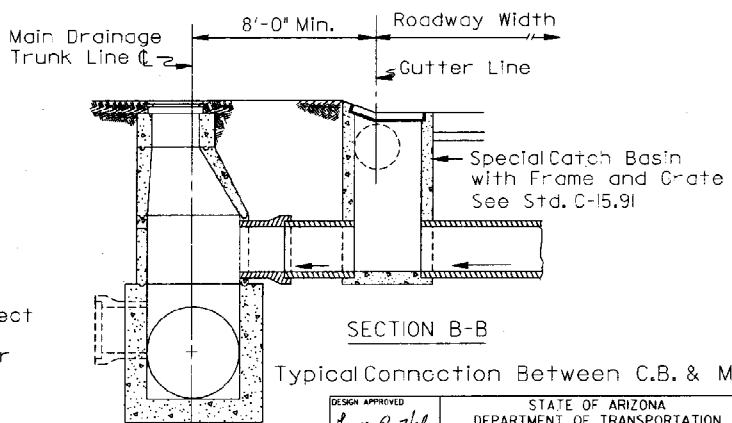

SECTION B-B

Typical Connection Between C.B. & Manhole

Notes:

1. Pipe collars not required where direct C.B. Connections can be made within 7° of a normal 90° installation, either horizontally or vertically.
2. "T" Connections direct to the Main Drainage Truck Line should be avoided and used only where Manhole Connections are impracticable.

DESIGN APPROVED George R. Hale	STATE OF ARIZONA DEPARTMENT OF TRANSPORTATION DIVISION OF HIGHWAYS STANDARD DRAWINGS	10/89
APPROVED FOR DISTRIBUTION	SLOTTED DRAIN INSTALLATION DETAILS	DRAWING NO. C-13.65

TOP VIEW

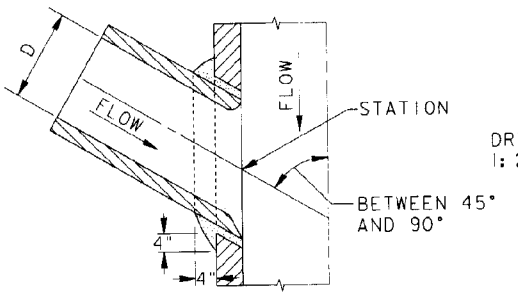

SECTION A-A

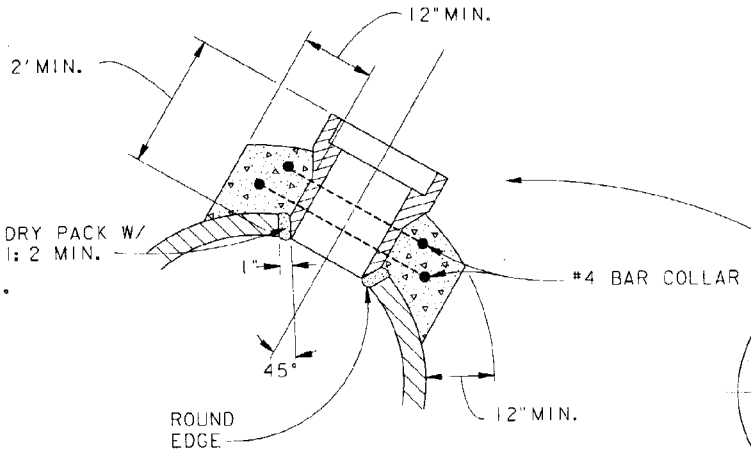

CONNECTION DETAIL
TYPE "2"

FRONT VIEW

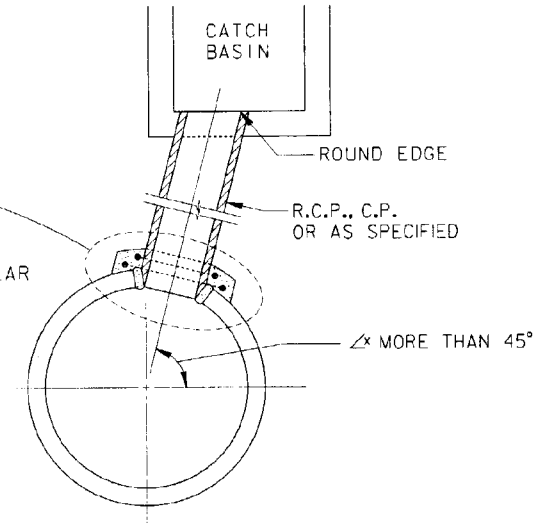

CATCH BASIN ABOVE STORM DRAIN
TYPE "2"

FRONT VIEW

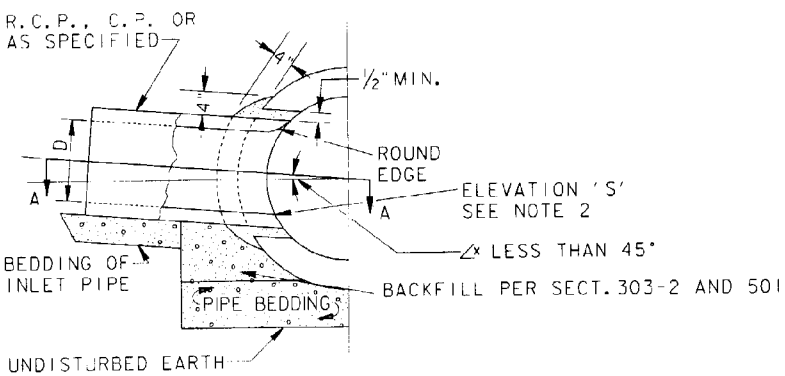

SIDE INLET
TYPE "1"

NOTES:

1. PREFABRICATED TEES SHALL BE USED WHEN THE OUTSIDE DIAMETER OF THE INLET PIPE EXCEEDS ONE HALF THE INSIDE DIAMETER OF THE MAIN STORM DRAIN, EXCEPT WHEN MANHOLES ARE SHOWN ON PLAN.
2. CENTERLINE OF INLET PIPE SHALL INTERSECT CENTERLINE OF MAIN STORM DRAIN EXCEPT WHEN ELEVAT ON 'S' IS SHOWN ON PLANS.
3. IF ∠x IS 45° OR LESS TYPE 1 SHALL BE USED.
4. ALL CONCRETE SHALL BE CLASS 'B'.
5. ALL REINFORCING STEEL SHALL CONFORM TO 1003-1, 2, GRADE 40.
6. REINFORCING SHALL HAVE 2" MIN. COVER.

DESIGN APPROVED George R. Hale	STATE OF ARIZONA DEPARTMENT OF TRANSPORTATION DIVISION OF HIGHWAYS STANDARD DRAWINGS	10/89
APPROVED FOR DISTRIBUTION	STORM DRAIN CONNECTION DETAILS	DRAWING NO. C-13.70

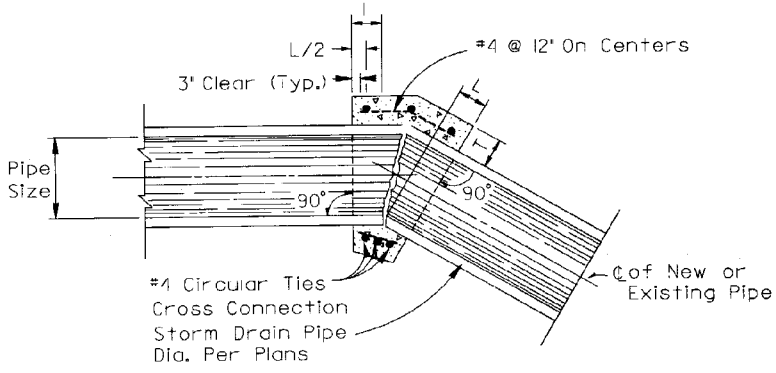

Concrete Pipe Collar

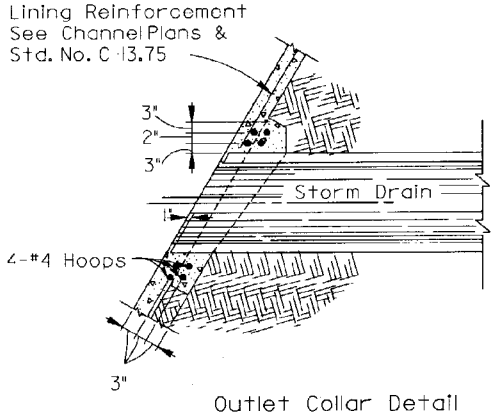

Outlet Collar Detail

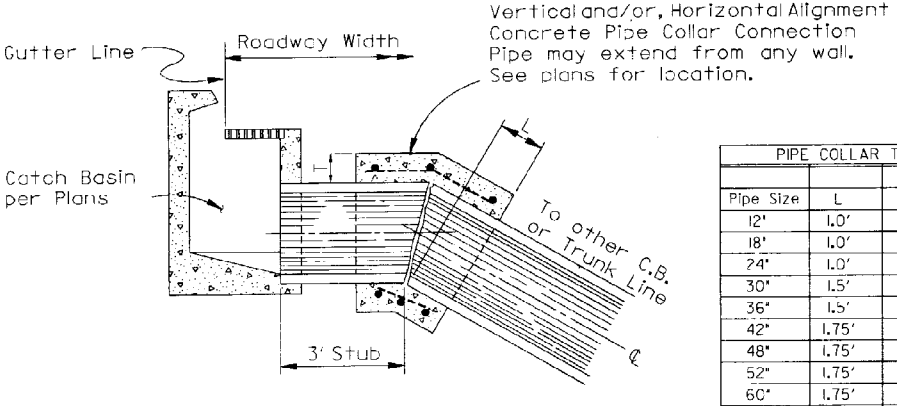

Typical Lateral Connections To
Catch Basins With Concrete Collars

PIPE COLLAR TABLE			
Pipe Size	L	T	#4 Ties
12"	1.0'	4"	3
18"	1.0'	5"	3
24"	1.0'	6"	3
30"	1.5'	8"	3
36"	1.5'	8"	3
42"	1.75'	10"	4
48"	1.75'	10"	4
52"	1.75'	10"	4
60"	1.75'	11"	4
66"	2.00'	11'	5
72"	2.00'	14"	5
78"	2.00'	14"	5
84"	2.25'	16"	5
96"	2.25'	16"	5

GENERAL NOTES:

1. All concrete shall be Class 'B'.
2. All Reinforcing Steel shall conform to 1003-1, 2, Grade 40.
3. All Reinforcing Steel shall have 2" minimum clear cover.
4. A Concrete Collar shall be required where pipes of different diameters or materials are joined or where the design change in alignment or grade exceeds that allowed for a standard joint.
5. When pipes of different diameters are joined with a concrete collar, 'L' & 'T' shall be those of the larger diameter.
6. The diameter of the Circular Ties shall be the outside diameter of pipe + T.
7. Pipe ends to be trimmed such that the maximum distance between pipes at any point is 2'.

DESIGN APPROVED George R. Hale APPROVED FOR DISTRIBUTION	STATE OF ARIZONA DEPARTMENT OF TRANSPORTATION DIVISION OF HIGHWAYS STANDARD DRAWINGS	10/89
	PIPE COLLAR DETAILS	DRAWING NO. C-13.80

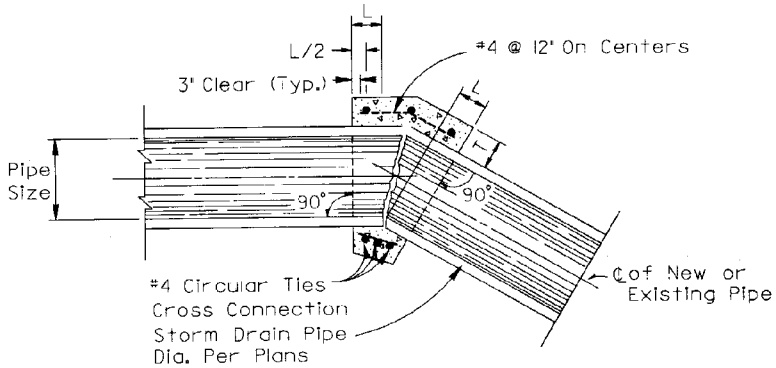

Concrete Pipe Collar

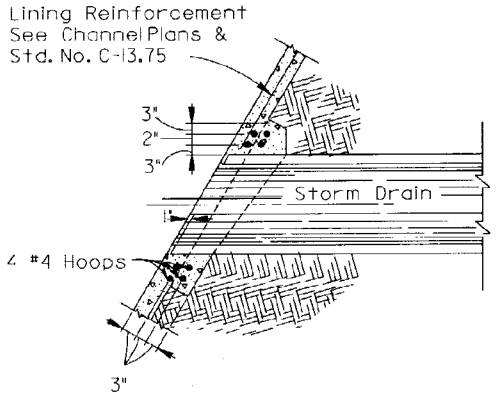

Outlet Collar Detail

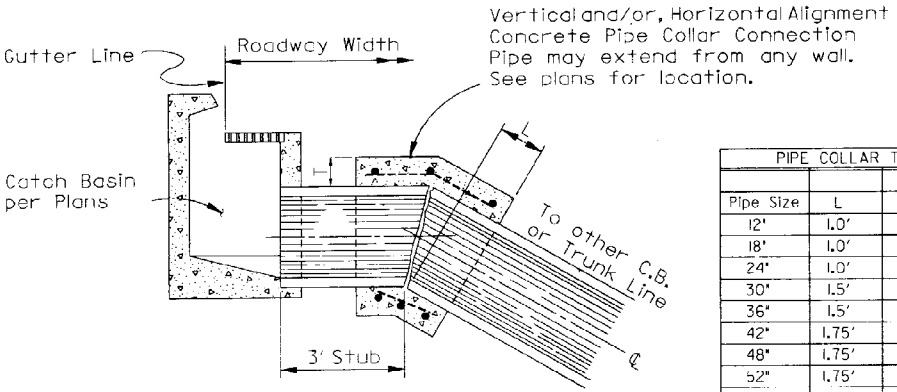

Typical Lateral Connections To
Catch Basins With Concrete Collars

PIPE COLLAR TABLE			
Pipe Size	L	T	#4 Ties
12"	1.0'	4"	3
18"	1.0'	5"	3
24"	1.0'	6"	3
30"	1.5'	8"	3
36"	1.5'	8"	3
42"	1.75'	10"	4
48"	1.75'	10"	4
52"	1.75'	10"	4
60"	1.75'	11"	4
66"	2.00'	11'	5
72"	2.00'	14"	5
78"	2.00'	14"	5
84"	2.25'	16"	5
96"	2.25'	16"	5

GENERAL NOTES:

1. All concrete shall be Class 'B'.
2. All Reinforcing Steel shall conform to 1003-1, 2, Grade 40.
3. All Reinforcing Steel shall have 2" minimum clear cover.
4. A Concrete Collar shall be required where pipes of different diameters or materials are joined or where the design change in alignment or grade exceeds that allowed for a standard joint.
5. When pipes of different diameters are joined with a concrete collar, 'L' & 'T' shall be those of the larger diameter.
6. The diameter of the Circular Ties shall be the outside diameter of pipe + T.
7. Pipe ends to be trimmed such that the maximum distance between pipes at any point is 2'.

DESIGN APPROVED George R. Hale APPROVED FOR DISTRIBUTION	STATE OF ARIZONA DEPARTMENT OF TRANSPORTATION DIVISION OF HIGHWAYS STANDARD DRAWINGS	10/89
	PIPE COLLAR DETAILS	DRAWING NO. C-13.80

DIMENSIONS									
I.D.	A	B	C	D	E	L	L + E	F	G
18"	6"	6"	1'-8"	4'-0"	2'-6"	9'-6"	12'-0"	1'-7"	4'-6"
24"	8"	8"	2'-0"	4'-2"	3'-0"	11'-6"	14'-6"	2'-1"	5'-6"
30"	8"	8"	2'-0"	4'-7"	3'-9"	13'-6"	17'-3"	2'-7"	6'-6"
36"	1'-0"	8"	2'-4"	5'-0"	4'-6"	15'-6"	20'-0"	3'-1"	7'-6"
42"	1'-1"	10"	2'-7"	5'-5"	5'-3"	17'-6"	22'-9"	3'-7"	8'-6"
48"	1'-2"	1'-0"	2'-10"	5'-10"	6'-0"	19'-6"	25'-6"	4'-1"	9'-6"

"L" HEADWALL									
I.D.	Conc.C.Y.		Reinf. Steel #4 Bars						lbs.
	For C.M.P.	For Conc. Pipe	a		b		b_1		
			No.	Lgth.	No.	Lgth.	No.	Lgth.	
18"	1.42	1.39	10	4'-8"	6	6'-9"	5	5'-8"	73
24"	2.00	1.96	12	5'-4"	6	8'-3"	6	6'-8"	97
30"	2.53	2.48	14	5'-10"	6	9'-9"	6	7'-8"	118
36"	3.27	3.20	16	6'-8"	6	11'-3"	7	8'-8"	149
42"	4.04	3.95	18	7'-2"	6	12'-9"	7	9'-8"	194
48"	4.94	4.82	20	7'-8"	6	14'-3"	8	10'-8"	215

SINGLE PIPE HEADWALL							
I.D.	Conc.C.Y.		Reinf. Steel #4 Bars				lbs.
	For C.M.P.	For Conc. Pipe	a		b		
			No.	Lgth.	No.	Lgth.	
18"	1.17	1.14	8	4'-8½"	5	9'-3"	56
24"	1.64	1.60	10	5'-4½"	5	11'-3"	74
30"	2.05	2.00	10	5'-10½"	5	13'-3"	83
36"	2.63	2.56	12	6'-8½"	5	15'-3"	105
42"	3.24	3.15	14	7'-2½"	5	17'-3"	125
48"	3.96	3.84	16	7'-8½"	5	19'-3"	147

DOUBLE PIPE HEADWALL							
I.D.	Conc. CY		Reinf. Steel #4 Bars				lbs.
	for CMP	for Conc Pipe	a		b		
			No.	Lgth.	No.	Lgth.	
18"	1.45	1.40	9	4'-8"	5	11'-9"	67
24"	2.00	1.93	10	5'-4"	5	14'-3"	83
30"	2.53	2.43	11	5'-10"	5	17'-0"	100
36"	3.28	3.15	13	6'-8"	5	19'-9"	124
42"	4.04	3.86	15	7'-2"	5	22'-6"	147
48"	4.97	4.74	16	7'-8"	5	25'-3"	156

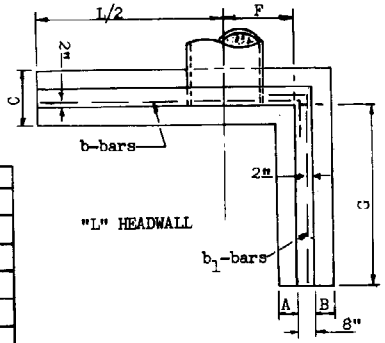

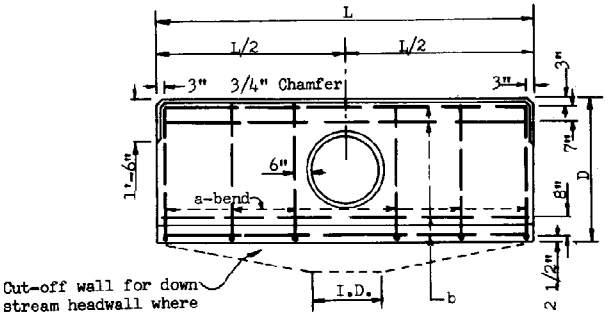

STRAIGHT HEADWALL
SINGLE PIPE

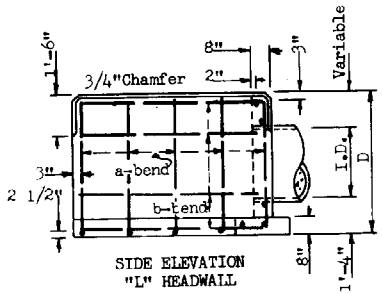

SIDE ELEVATION
"L" HEADWALL

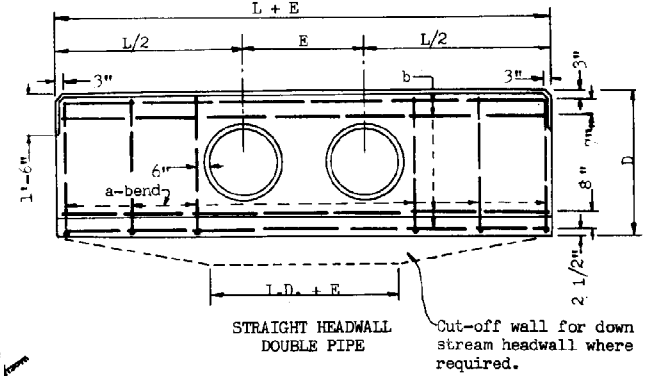

STRAIGHT HEADWALL
DOUBLE PIPE

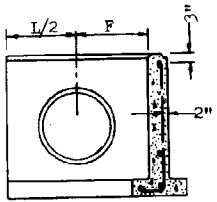

SECTION
"L" HEADWALL

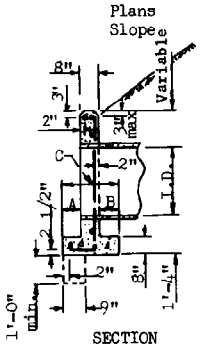

SECTION
STRAIGHT HEADWALL

GENERAL NOTES

1. All concrete shall be Class B
2. High point of headwall shall not project more than 3" above slope.

DESIGN APPROVED	STATE OF ARIZONA DEPARTMENT OF TRANSPORTATION DIVISION OF HIGHWAYS STANDARD DRAWINGS	REV. 1/83
APPROVED FOR DISTRIBUTION	HEADWALL, PIPE, STRAIGHT & "L" TYPES	DRAWING NO. C-14.10

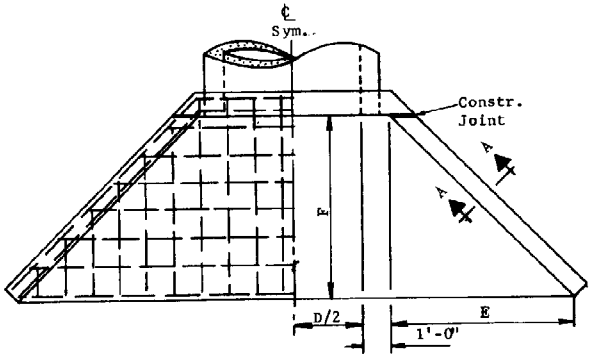

INLET HEADWALL

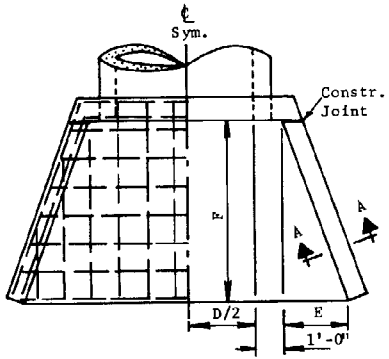

OUTLET HEADWALL

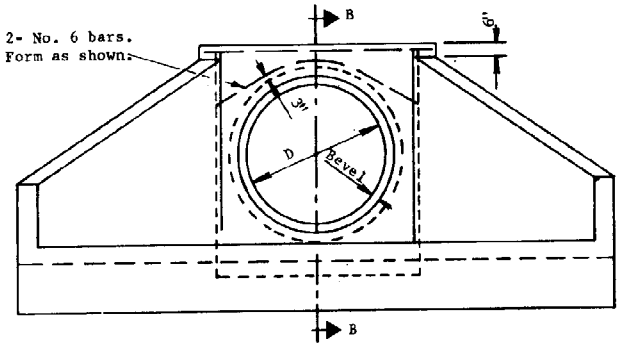

INLET HEADWALL FACE ELEV.-OUTLET SIMILAR

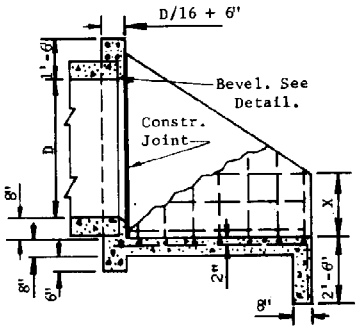

SECTION B-B

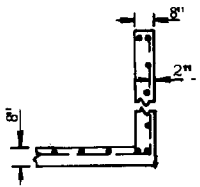

SECTION A-A

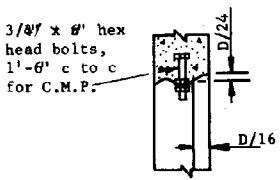

BEVEL DETAIL

D	Type	Dimensions F	Dimensions E	Dimensions X	Conc. (C.Y.) C.M.P.	Conc. (C.Y.) R.C.P.	Reinf. Steel (Lbs.)
	1 1/2:1 Embankment Slope						
42"	1(Inlet)	5'-2"	5'-2"	1'-9"	4.55	4.45	275
	2(Outlet)	5'-2"	1'-11"	1'-9"	3.53	3.45	213
48"	3(Inlet)	5'-8"	5'-8"	1'-11"	5.32	5.20	321
	4(Outlet)	5'-8"	2'-1"	1'-11"	4.12	4.03	249
54"	5(Inlet)	6'-2"	6'-2"	2'-1"	6.14	6.01	370
	6(Outlet)	6'-2"	2'-3"	2'-1"	4.75	4.65	287
60"	7(Inlet)	6'-8"	6'-8"	2'-3"	7.03	6.88	424
	8(Outlet)	6'-8"	2'-5"	2'-3"	5.43	5.31	328
66"	9(Inlet)	7'-2"	7'-2"	2'-5"	7.98	7.81	481
	10(Outlet)	7'-2"	2'-7"	2'-5"	6.16	6.02	372
72"	11(Inlet)	7'-8"	7'-8"	2'-7"	8.99	8.80	542
	12(Outlet)	7'-8"	2'-9"	2'-7"	6.94	6.78	419
78"	13(Inlet)	8'-2"	8'-2"	2'-9"	10.07	9.85	608
	14(Outlet)	8'-2"	3'-0"	2'-9"	7.78	7.61	469
84"	15(Inlet)	8'-8"	8'-8"	2'-11"	11.20	10.96	676
	16(Outlet)	8'-8"	3'-2"	2'-11"	8.66	8.47	522
	4:1 Embankment Slope						
42"	17(Inlet)	8'-8"	8'-8"	3'-0"	7.88	7.70	475
	18(Outlet)	8'-8"	3'-2"	3'-0"	5.59	5.46	337
48"	19(Inlet)	8'-8"	8'-8"	3'-6"	8.47	8.28	511
	20(Outlet)	8'-8"	3'-2"	3'-6"	6.10	5.97	368
54"	21(Inlet)	8'-8"	8'-8"	4'-0"	9.07	8.87	548
	22(Outlet)	8'-8"	3'-2"	4'-0"	6.63	6.48	400
60"	23(Inlet)	9'-4"	9'-4"	4'-4"	10.39	10.16	627
	24(Outlet)	9'-4"	3'-5"	4'-4"	7.60	7.43	458
66"	25(Inlet)	9'-8"	9'-8"	4'-9"	11.42	11.17	689
	26(Outlet)	9'-8"	3'-6"	4'-9"	8.39	8.20	506
72"	27(Inlet)	9'-8"	9'-8"	5'-3"	12.11	11.84	731
	28(Outlet)	9'-8"	3'-6"	5'-3"	8.99	8.80	542
78"	29(Inlet)	10'-0"	10'-0"	5'-8"	13.22	12.93	798
	30(Outlet)	10'-0"	3'-8"	5'-8"	9.88	9.66	596
84"	31(Inlet)	10'-8"	10'-8"	6'-0"	14.81	14.48	893
	32(Outlet)	10'-8"	3'-11"	6'-0"	11.00	10.76	664

GENERAL NOTES

1. All concrete shall be Class B
2. All rebars shall be No. 4 except 2-formed bars over pipe. Bar spacing shall be 1'-0" c to c.
3. High point of headwall shall not project more than 3" above slope.
4. For skewed pipe dimensions, see Std. C-14.21
5. Bevel is required only on inlet headwalls. Bell end of concrete pipe may replace bevel.

DESIGN APPROVED

APPROVED FOR DISTRIBUTION

STATE OF ARIZONA
DEPARTMENT OF TRANSPORTATION
DIVISION OF HIGHWAYS
STANDARD DRAWINGS

REV 1/83

HEADWALL, NORMAL TO PIPE
42" - 84" PIPE

DRAWING NO. C-14.20

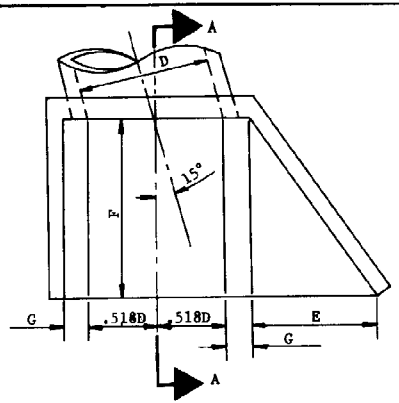

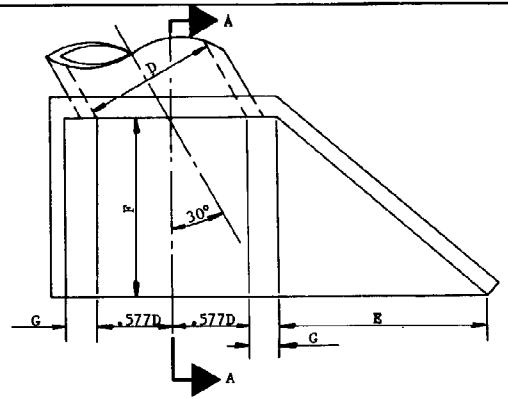

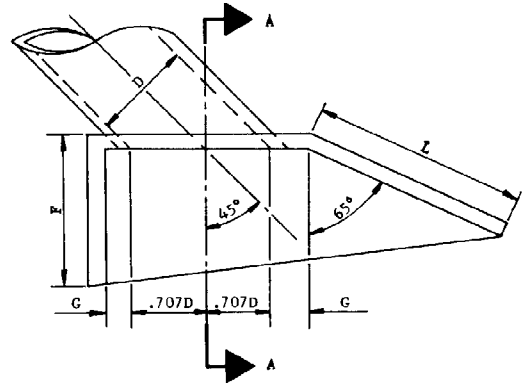

1 1/2:1 Embankment Slope								
		Dimensions				Conc. (CY)		Reinf. Steel
D	Type	E	F	G	X*	CMP	RCP	(Lbs.)
42"	1	3'-7"	5'-2"	0'-8"	1'-9"	3.46	3.38	208
48"	2	4'-0"	5'-8"	0'-9"	1'-11"	4.03	3.94	246
54"	3	4'-4"	6'-2"	0'-9"	2'-1"	4.66	4.56	285
60"	4	4'-8"	6'-8"	0'-10"	2'-3"	5.41	5.29	324
66"	5	5'-0"	7'-2"	0'-11"	2'-5"	6.21	6.07	374
72"	6	5'-4"	7'-8"	0'-11"	2'-7"	7.01	6.86	421
78"	7	5'-9"	8'-2"	1'-0"	2'-9	7.94	7.76	479
84"	8	6'-1"	8'-8"	1'-1"	2'-11"	8.74	8.54	529
4:1 Embankment Slope								
42"	9	6'-1"	8'-8"	0'-8"	3'-0"	5.32	5.20	338
48"	10	6'-1"	8'-8"	0'-9"	3'-6"	6.01	5.88	369
54"	11	6'-1"	8'-8"	0'-9"	4'-0"	6.55	6.41	400
60"	12	6'-6"	9'-4"	0'-10"	4'-4"	7.55	7.38	453
66"	13	6'-9"	9'-8"	0'-11"	4'-9"	8.48	8.30	512
72"	14	6'-9"	9'-8"	0'-11"	5'-3"	8.90	8.70	552
78"	15	7'-0"	10'-0"	1'-0"	5'-8"	10.08	9.86	608
84"	16	7'-6"	10'-8"	1'-1"	6'-0"	11.38	11.13	687

15° Sk. Headwalls

1 1/2:1 Embankment Slope								
		Dimensions				Conc. (CY)		Reinf. Steel
D	Type	E	F	G	X*	CMP	RCP	(Lbs.)
42"	17	6'-2"	5'-2"	1'-0"	1'-9"	4.07	3.98	245
48"	18	6'-9"	5'-8"	1'-0"	1'-11"	4.76	4.66	286
54"	19	7'-4"	6'-2"	1'-1"	2'-1"	5.58	5.46	337
60"	20	7'-11"	6'-8"	1'-2"	2'-3"	6.47	6.33	391
66"	21	8'-6"	7'-2"	1'-3"	2'-5"	7.41	7.25	448
72"	22	9'-2"	7'-8"	1'-4"	2'-7"	8.51	8.32	508
78"	23	9'-9"	8'-2"	1'-4"	2'-9"	9.46	9.25	567
84"	24	10'-4"	8'-8"	1'-5"	2'-11"	10.61	10.37	632
4:1 Embankment Slope								
42"	25	10'-4"	8'-8"	1'-0"	3'-0"	6.70	6.56	415
48"	26	10'-4"	8'-8"	1'-0"	3'-6"	7.29	7.13	451
54"	27	10'-4"	8'-8"	1'-1"	4'-0"	7.97	7.79	481
60"	28	11'-1"	9'-4"	1'-2"	4'-4"	9.21	9.01	559
66"	29	11'-6"	9'-8"	1'-3"	4'-9"	10.25	10.03	619
72"	30	11'-6"	9'-8"	1'-4"	5'-3"	11.04	10.80	666
78"	31	11'-11"	10'-0"	1'-4"	5'-8"	12.11	11.84	734
84"	32	12'-9"	10'-8"	1'-5"	6'-0"	13.65	13.35	826

30° Sk. Headwalls

1 1/2:1 Embankment Slope									
		Dimensions					Conc. (CY)		Reinf. Steel
D	Type	F	G	L	X*	X'*	CMP	RCP	(Lbs.)
42"	33	5'-2"	1'-5"	9'-6"	1'-9"	2'-6"	5.27	5.16	316
48"	34	5'-8"	1'-6"	9'-6"	1'-11"	3'-0"	6.11	5.99	367
54"	35	6'-2"	1'-7"	9'-6"	2'-1"	3'-6"	7.09	6.95	426
60"	36	6'-8"	1'-8"	9'-9"	2'-3"	3'-11"	8.16	8.00	490
66"	37	7'-2"	1'-9"	9'-9"	2'-5"	4'-5"	9.30	9.11	558
72"	38	7'-8"	1'-10"	9'-9"	2'-7"	4'-11"	10.60	10.39	636
78"	39	8'-2"	1'-11"	10'-1"	2'-9"	5'-4"	11.65	11.42	699
84"	40	8'-8"	2'-0"	10'-4"	2'-11"	5'-9"	12.94	12.68	777
4:1 Embankment Slope									
42"	41	8'-8"	1'-5"	10'-10"	3'-0"	4'-0"	6.98	6.84	419
48"	42	8'-8"	1'-6"	10'-10"	3'-6"	4'-6"	7.61	7.46	457
54"	43	8'-8"	1'-7"	10'-10"	4'-0"	5'-0"	8.29	8.12	498
60"	44	9'-4"	1'-8"	11'-8"	4'-4"	5'-5"	9.62	9.43	577
66"	45	9'-8"	1'-9"	12'-1"	4'-9"	5'-11"	10.68	10.47	641
72"	46	9'-8"	1'-10"	12'-1"	5'-3"	6'-5"	11.53	11.30	692
78"	47	10'-0"	1'-11"	12'-6"	5'-8"	6'-10"	12.69	12.44	762
84"	48	10'-8"	2'-0"	13'-4"	6'-0"	7'-3"	14.15	13.87	849

45° Sk. Headwalls

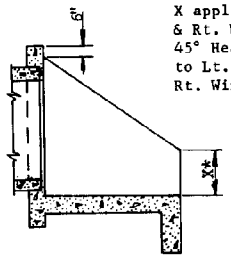

Section A-A

*15° & 30° Sk. Headwalls, X applies to both Lt. & Rt. Wings.
45° Headwalls, X applies to Lt. Wing and X' to Rt. Wing.

For other headwall dimensions, steel reinforcing, inlet bevel and other details not shown, see Std. C-14.20

For skewed installations, inlet and outlet headwall types are identical for equal embankment slopes.

For inlet and outlet wingwall flare differences for headwalls normal to pipe, see Std. C-14.20

See Structures Section Standards for headwall design for pipes over 84" Dia.

DESIGN APPROVED

APPROVED FOR DISTRIBUTION

STATE OF ARIZONA
DEPARTMENT OF TRANSPORTATION
DIVISION OF HIGHWAYS
STANDARD DRAWINGS

REV 1/83

HEADWALLS, 42" - 84" PIPE SKEWED

DRAWING NO. C-14.21

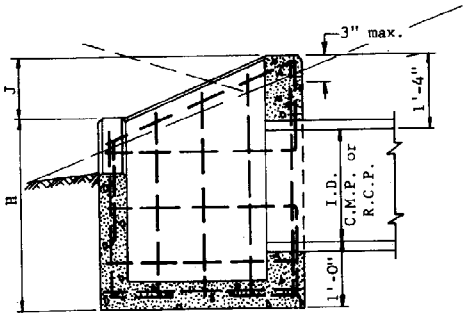

SECTION Z-Z

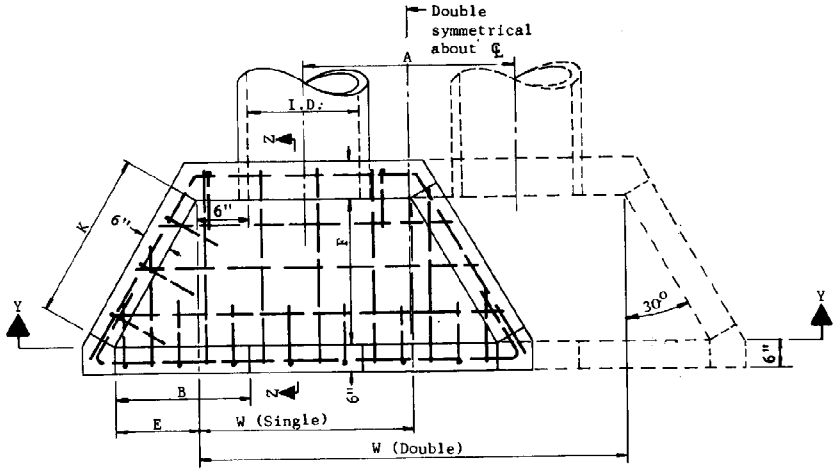

PLAN

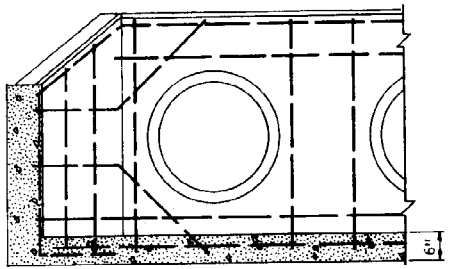

SECTION Y-Y

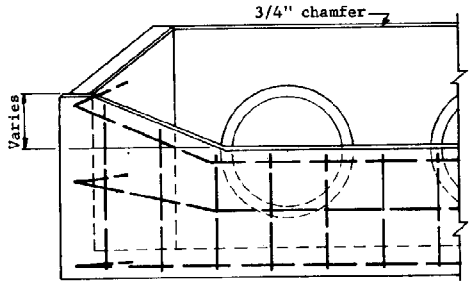

ELEVATION

GENERAL NOTES

1. See also Std. C-13.10
2. High point of headwall shall not project more than 3" above slope.
3. All concrete shall be Class B
4. All reinforcing bars shall be number 4, 1'-0" c to c and 3" clear to inside of walls and floor.

PIPE	DIMENSIONS									QUANTITIES					
										CONC. C.Y.				REINF. STEEL LBS.	
	W									Single		Double			
I.D.	Single	Double	A	B	E	F	H	J	K	C.M.P.	For Conc. Pipe Deduct	C.M.P.	For Conc. Pipe Deduct	Single	Double
18"	2'-6"	5'-2"	2'-8"	1'-3"	9"	1'-3 5/8"	3'-1"	9"	1'-6"	0.76	0.03	1.12	0.06	75	107
24"	3'-0"	6'-6"	3'-6"	1'-7 1/2"	1'-1 1/2"	1'-11 3/8"	3'-5"	11"	2'-3"	1.00	0.04	1.55	0.09	92	136
30"	3'-6"	7'-10"	4'-4"	2'-0"	1'-6"	2'-7 1/4"	3'-9"	1'-1"	3'-0"	1.50	0.06	2.29	0.13	112	166
36"	4'-0"	9'-2"	5'-2"	2'-4 1/2"	1'-10 1/2"	3'-3"	4'-0"	1'-4"	3'-9"	1.96	0.09	3.01	0.17	145	214
42"	4'-6"	10'-6"	6'-0"	2'-9"	2'-3"	3'-10 3/4"	4'-4"	1'-6"	4'-6"	2.49	0.11	3.85	0.23	189	279

DESIGN APPROVED

APPROVED FOR DISTRIBUTION

STATE OF ARIZONA
DEPARTMENT OF TRANSPORTATION
DIVISION OF HIGHWAYS
STANDARD DRAWINGS

HEADWALL, DROP INLET

REV 1/83

DRAWING NO. C-14.30

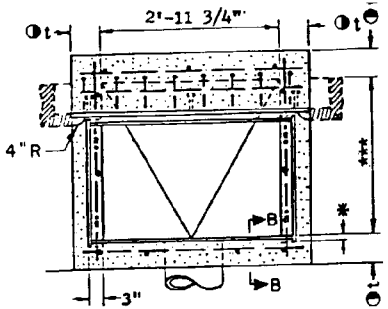

PLAN-CATCH BASIN TYPE 1 - SINGLE

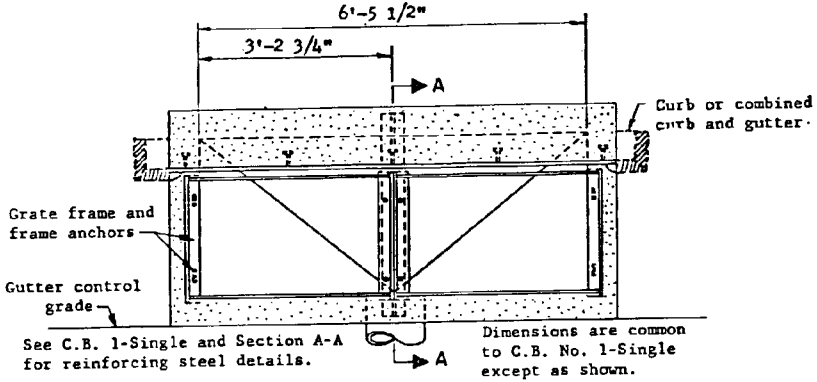

PLAN-CATCH BASIN TYPE 1 - DOUBLE

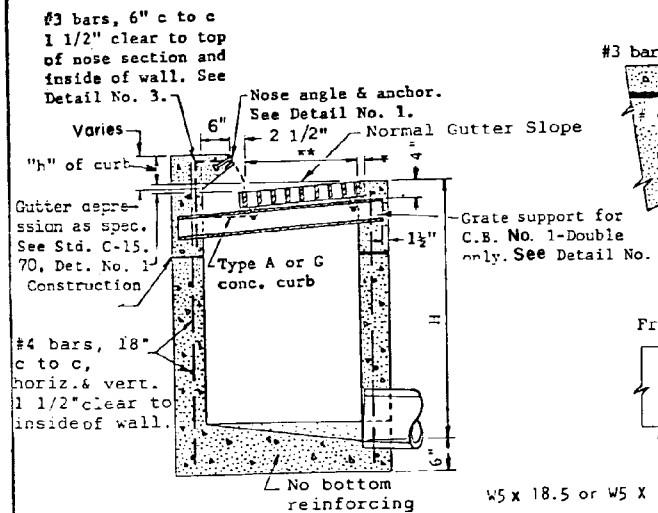

SECTION A-A

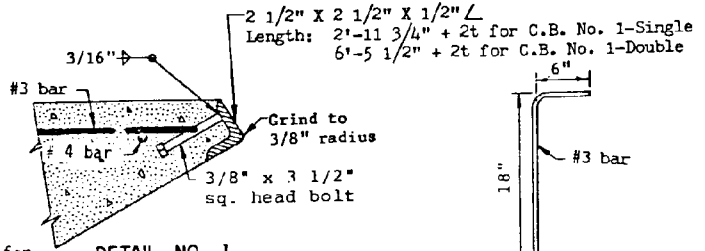

DETAIL NO. 1

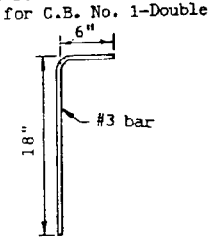

DETAIL NO. 3

NOTE: Provide Std. C-15.70 Construction Drain.

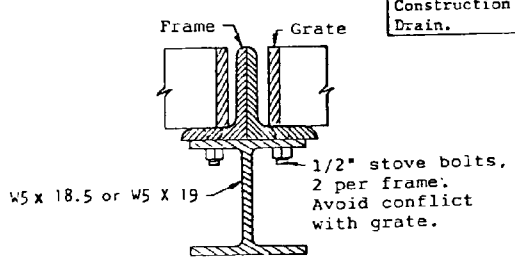

DETAIL NO. 2

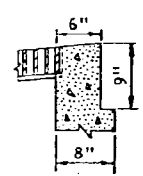

SECTION B-B

Use this section when t = 8"

GENERAL NOTES

Pipes can be placed in any wall.

Floor shall have a wood trowel finish and a minimum 4:1 slope in all directions to outlet.

All structural steel shall be ASTM A 36.

Welding shall be in accordance with Std. Welding Specifications.

Grate, frame, beam and nose angle shall be given one shop coat of No. 1 paint.

Concrete shall be Class B

Construction joints and drains shall be placed to meet field conditions. See Std. C-15.70

Any specified gutter depression shall be warped to opening according to Std. C-15.70

Curb opening areas, sq. ft., for Type 1-Single and Type 1-Double equal 0.25 and 0.54, respectively, for each inch of "h" + gutter depression —2.35". See Std. C-15.70

For grate and frame details and grate opening areas, see Stds. C-15.50 & C-15.60

*3/4" for longitudinal and 3" for transverse bar grates.

** 2'-0" for LW, LB, EF, TW and TB series 1 grates. 1'-6" for LW, LB, EF, TW and TB series 2 grates. Use 1'-6" with combined curb and gutter.

*** 2'-8½" for LW, LB, TW and TB series 1 grates. 2'-2½" for LW, LB, TW and TB series 2 grates.

t=6" when H is 8' or less; 8" when H is over 8". See Sect. B-B.

DESIGN APPROVED	STATE OF ARIZONA DEPARTMENT OF TRANSPORTATION DIVISION OF HIGHWAYS STANDARD DRAWINGS	REV. 11/87
APPROVED FOR DISTRIBUTION	CATCH BASIN, TYPE 1	DRAWING NO. C-15.10

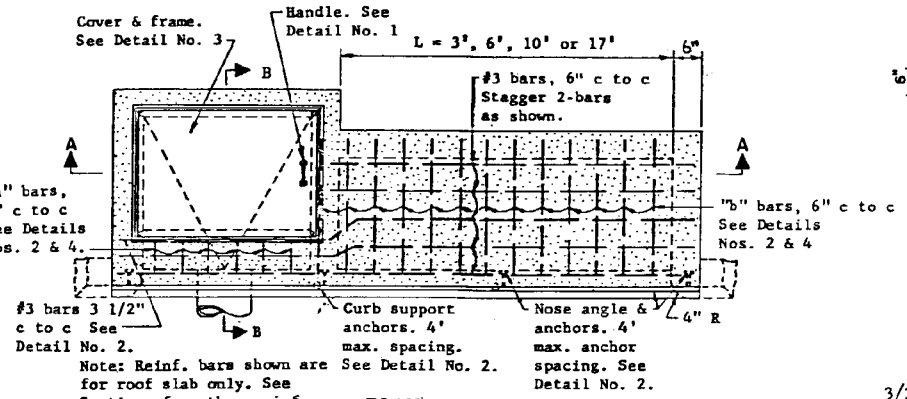

PLAN

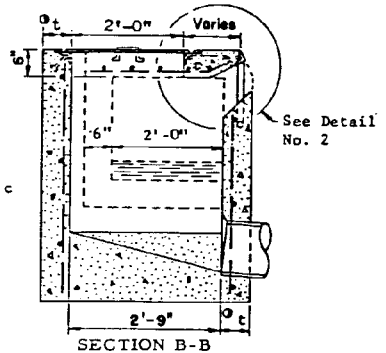

SECTION B-B

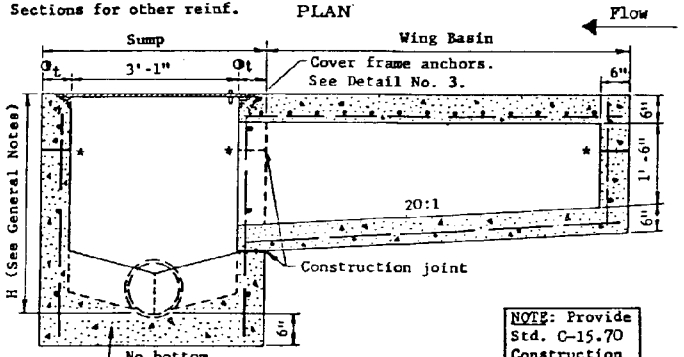

SECTION A-A

NOTE: Provide Std. C-15.70 Construction Drain.

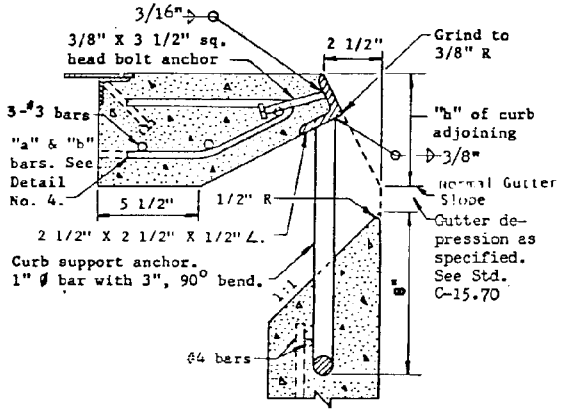

DETAIL NO. 2

GENERAL NOTES

Type 3 - Sump Only.

Type 3-Wing(illustrated), sump with wing basin upstream.

Type 3-Double wing, sump with symmetrical wing basin each side.

Pipes can be placed in any wall except wall adjacent to wing basin.

Sump floor shall have a wood trowel finish and a minimum slope of 4:1 in all directions toward outlet pipe.

Gutter depression shall be warped to opening according to Std. C-15.70

All structural steel shall be ASTM A 36.

Nose angle, frame and cover shall be given one shop coat of No. 1 paint.

All concrete shall be Class B

All reinforcing bars shall be #4, 1'-6" c to c both ways and 1 1/2" clear to inside of walls and outside of wing basin floor except as shown.

Curb opening area (Sq. Ft.) per inch of curb "h" + gutter depression = curb opening length (ft.) X 0.0833.

Welding shall be in accordance with Standard Welding Specifications.

* Construction joints at or below bottom of curb line. Construction joints and drains shall be placed to meet field conditions. See Std. C-15.70

t = 6" when H = 8' or less
8" when H is greater than 8'.
See Sect. B-B, Std. C-15.01.

H = 2'-10" min. when L = 3'
3'-0" min. when L = 6'
3'-2" min. when L = 10'
3'-7" min. when L = 17'

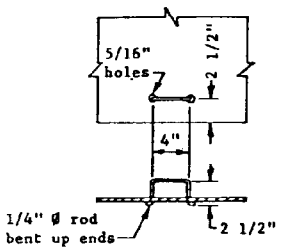

DETAIL NO. 1

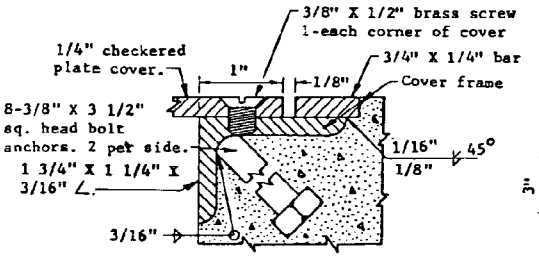

DETAIL NO. 3

Miter frame sections 45° butt weld and surface grind.

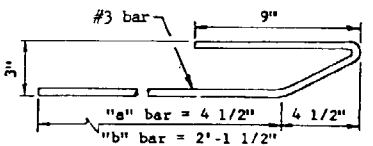

DETAIL NO. 4

DESIGN APPROVED / APPROVED FOR DISTRIBUTION	STATE OF ARIZONA DEPARTMENT OF TRANSPORTATION DIVISION OF HIGHWAYS STANDARD DRAWINGS	REV. 12/87
	CATCH BASIN, TYPE 3	DRAWING NO. C-15.20

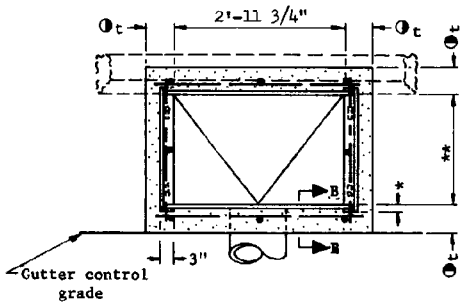

PLAN, CATCH BASIN TYPE 4 - SINGLE

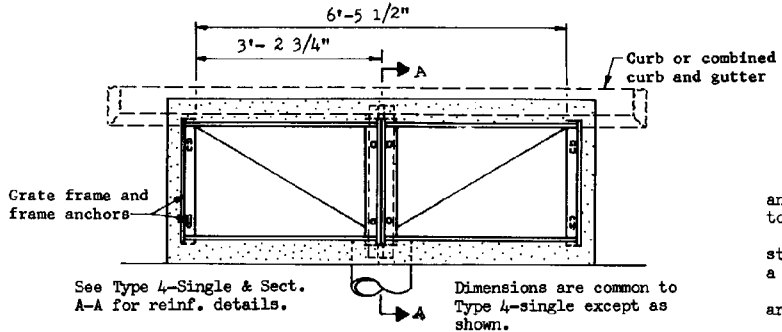

PLAN, CATCH BASIN TYPE 4 - DOUBLE

NOTE: Provide Std. C-15.70 Construction Drain.

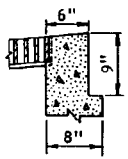

SECTION B-B

Use this section when t = 8"

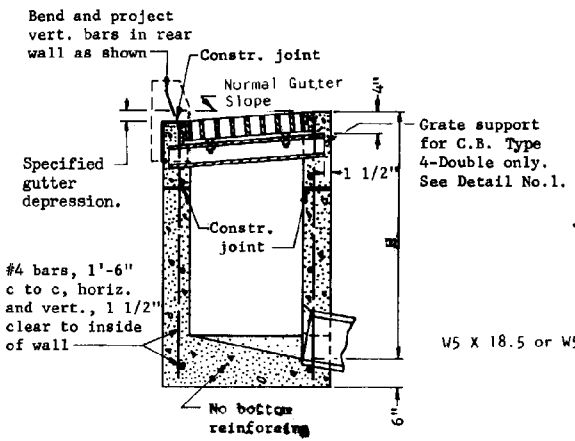

SECTION A-A

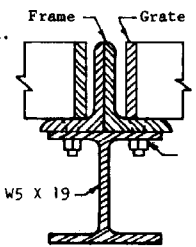

DETAIL NO. 1

GENERAL NOTES

Pipes can be placed in any wall.

Sump floor shall have a wood trowel finish and a minimum slope of 4:1 in all directions toward outlet pipe.

Curb over catch basin shall not be constructed until catch basin concrete has set for a minimum of 24 hours.

For grate and frame details and opening areas, see Stds. C-15.50 & C-15.60 .

Any specified gutter depression shall be warped to opening according to Std. C-15.70

All structural steel shall be ASTM A 36.

Grate, frame and beam shall be given one shop coat of No. 1 paint.

All concrete shall be Class B

Construction joints & drains shall be placed to meet field conditions. See Std. C-15.70

* 3/4" for longitudinal and 3" for transverse bar grates.

** 2'-0" for LW, LB, EF, TW and TB series 1 grates. 1'-6" for LW, LB, EF, TW and TB series 2 grates. Use 1'-6" with combined curb & gutter.

◑ t=6" when H=8' or less; 8" when H is greater than 8'. See Section B-B.

DESIGN APPROVED	STATE OF ARIZONA DEPARTMENT OF TRANSPORTATION DIVISION OF HIGHWAYS STANDARD DRAWINGS	REV. 6/86
APPROVED FOR DISTRIBUTION	CATCH BASIN, TYPE 4	DRAWING NO. C-15.30

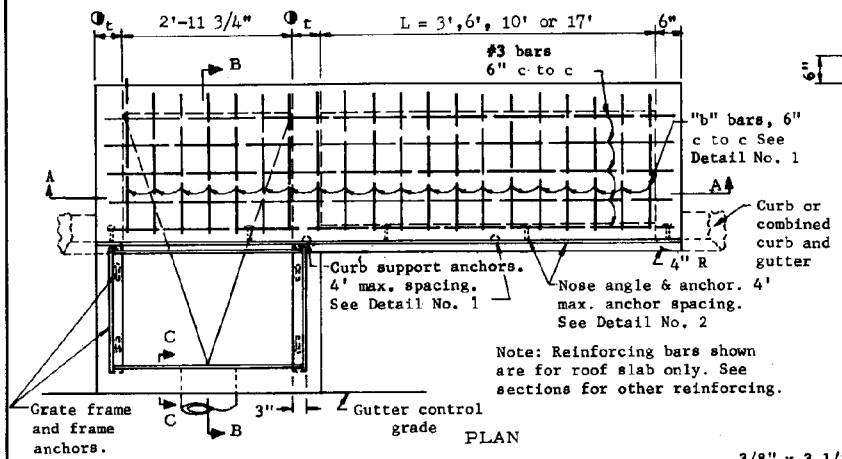

Note: Reinforcing bars shown are for roof slab only. See sections for other reinforcing.

PLAN

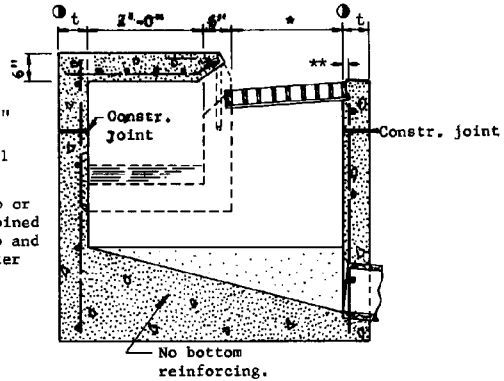

SECTION B-B

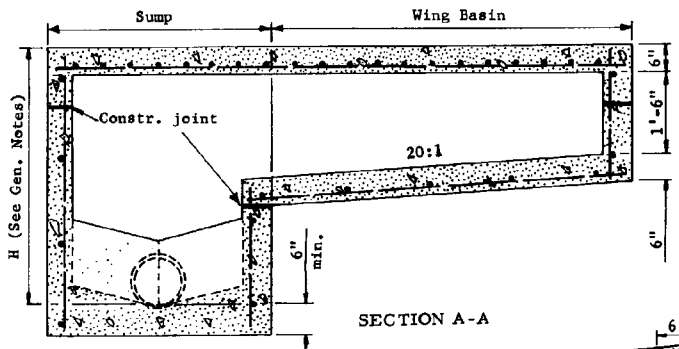

SECTION A-A

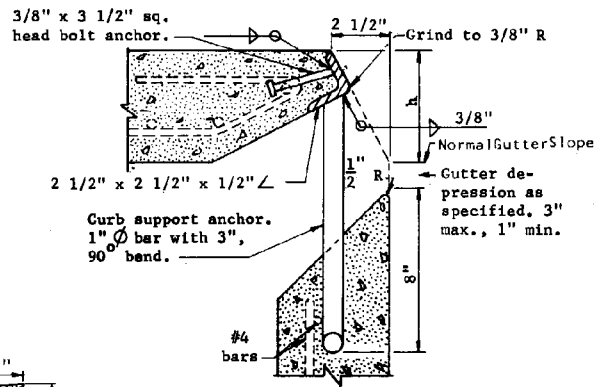

DETAIL NO. 2

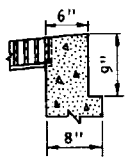

SECTION C-C
Use this section when t = 8"

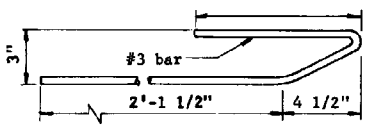

DETAIL NO. 1

NOTE: Provide Std. C-15.70 Construction Drain.

GENERAL NOTES

C.B. 5, sump only.

C.B. 5 Single, (illustrated), sump with wing basin upstream.

C.B. 5 Double, sump with symmetrical wing basins each side.

Pipes can be placed in any wall except wall adjacent to a wing basin.

Sump floor shall have a wood trowel finish and a minimum slope of 4:1 in all directions toward outlet pipe.

Welding shall be in accordance with Std. Welding Specifications.

Gutter depression shall be warped to opening according to Std. C-15.70

All structural steel shall be in accordance with ASTM A 36.

Nose angle shall be painted with one No. 1 shop coat.

All concrete shall be Class B

All reinforcing bars shall be #4, 18" c to c both ways and 1 1/2" clear to inside of walls and outside of wing basin floor except as shown.

Curb opening area (Sq. Ft.) per inch of curb "h" + gutter depression = curb opening length (Ft.) X 0.0834.

For grate and frame details and opening areas, see Stds. C-15.50 & C-15.60

Construction joints shall be placed to meet field conditions.

t = 6" when H = 8' or less; 8" when H is greater than 8'. (See Section C-C)

* 2'-0" for LW, LB, EF, TW and TB series 1 grates. 1'-6" for LW, LB, EF, TW and TB series 2 grates. Use 1'-6" with combined curb and gutter.

** 3/4" for longitudinal and 3" for transverse bar grates.

H=3'-3" min. when L=3'
H=3'-5" min. when L=6'
H=3'-7" min. when L=10'
H=4'-0" min. when L=17'

DESIGN APPROVED	STATE OF ARIZONA DEPARTMENT OF TRANSPORTATION DIVISION OF HIGHWAYS STANDARD DRAWINGS	REV 6/86
APPROVED FOR DISTRIBUTION	CATCH BASIN, TYPE 5	DRAWING NO. C-15.40

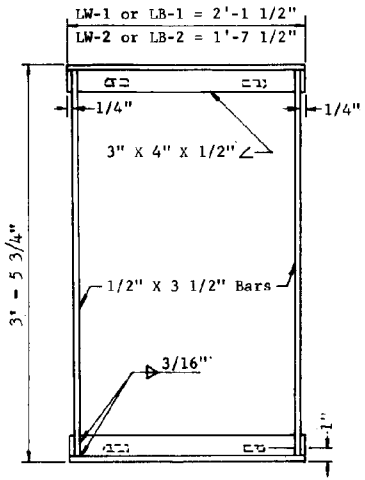

PLAN

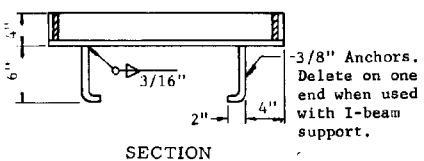

SECTION

FRAME

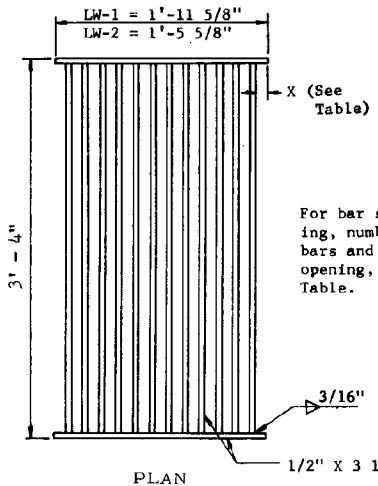

PLAN

For bar spacing, number of bars and grate opening, see Table.

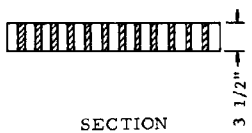

SECTION

GRATES TYPE LW & EF
Restrict to slopes of 3% or less.

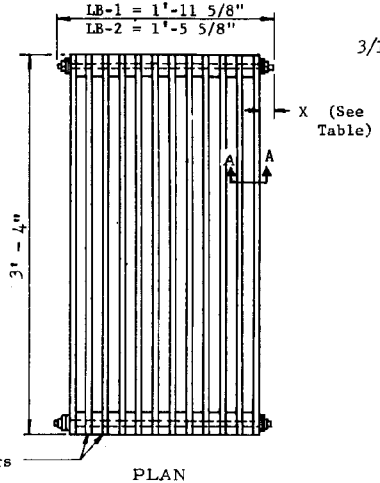

PLAN

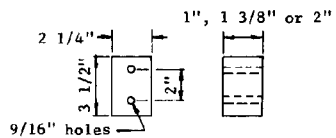

BAR SPACER DETAIL
Cast iron, cast steel or steel bar stock.

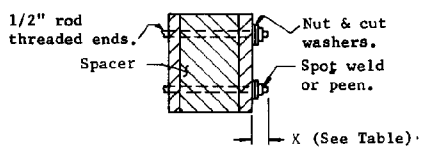

SECTION A-A'

GRATES TYPE LB
Use on longitudinal grades in excess of 3% or as an alternate to Types LW or EF on grades of 3% or less.

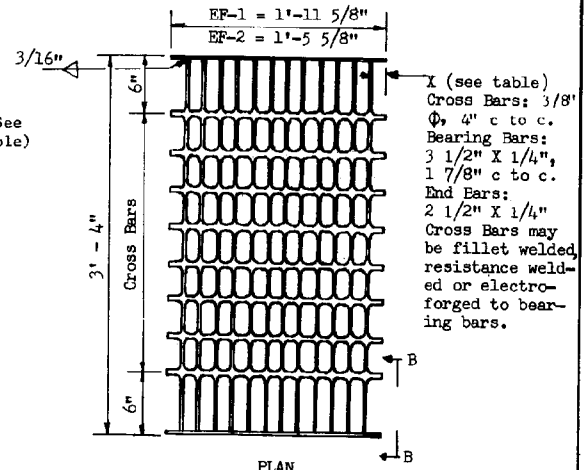

PLAN

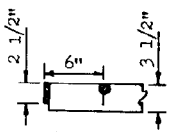

SECT. B-B

GENERAL NOTES

LW indicates longitudinal welded.
LB indicates longitudinal bolted.
EF indicates electroforged.

Grating units and frames shall be fabricated from structural steel ASTM A 36 except as noted.

All welding shall be in accordance with Standard Welding Specifications.

The completed assembly shall be given one shop coat of No. 1 paint.

Frames and grates shall fit to a maximum rock of 0.093" at any point.

GRATE TYPE	CLEAR BAR SPACING	NO. BARS	X	GRATE OPENING SQ. FT.
LW or LB - 1.0	1"	16	5/16"	3.97
" " - 1.1	1 3/8"	13	5/16"	4.34
" " - 1.2	2"	9	1 9/16"	4.84
EF - 1	1 5/8"	13	7/16"	4.66
LW or LB - 2.0	1"	12	5/16"	2.98
" " - 2.1	1 3/8"	9	1 1/16"	3.35
" " - 2.2	2"	7	1 1/16"	3.60
EF - 2	1 5/8"	10	1/4"	3.48

DESIGN APPROVED

APPROVED FOR DISTRIBUTION

STATE OF ARIZONA
DEPARTMENT OF TRANSPORTATION
DIVISION OF HIGHWAYS
STANDARD DRAWINGS

CATCH BASIN, GRATES, LONGITUDINAL BARS

REV. 1/83

DRAWING NO. C-15.50

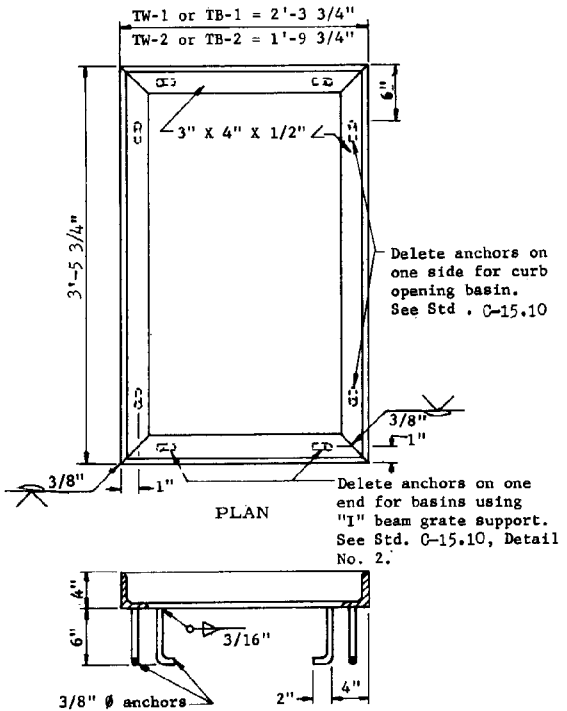

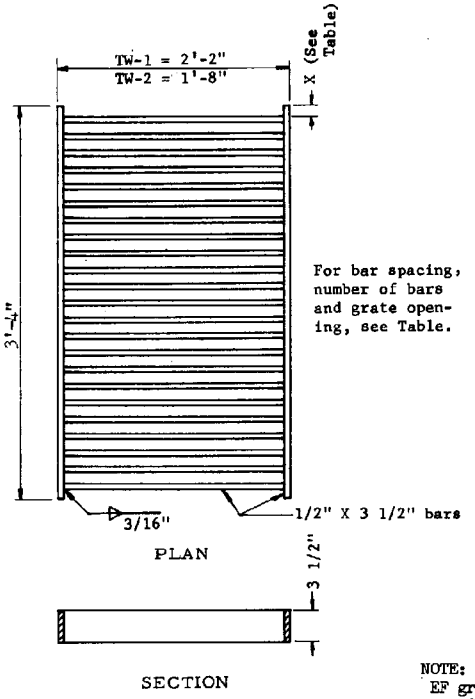

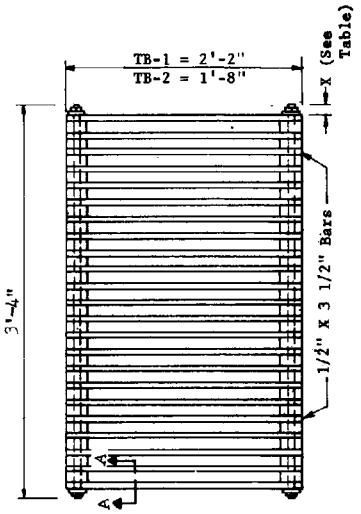

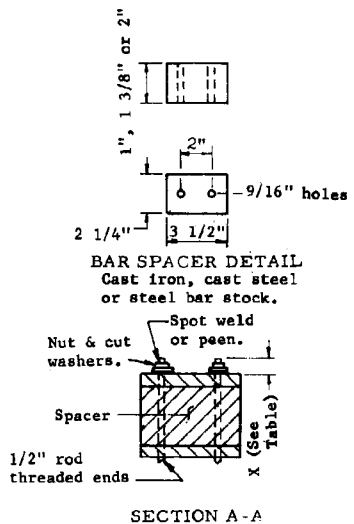

NOTE: See also Type EF grates, Std. C-15.50.

GRATE TYPES TW-1 & TW-2

GRATE TYPES TB-1 & TB-2

Type	Clear Spacing	No. Bars	X	Grate Opening Sq. Ft.
TW or TB-1.0	1"	26	1"	3.21
TW or TB-1.1	1 3/8"	21	1"	3.32
TW or TB-1.2	2"	16	1"	4.66
TW or TB-2.0	1"	26	1"	2.32
TW or TB-2.1	1 3/8"	21	1"	2.41
TW or TB-2.2	2"	16	1"	2.65

GENERAL NOTES

Grating units and frames shall be fabricated from structural steel except as noted. Structural steel shall be in accordance with ASTM A 36.

Welding shall be in accordance with Standard Welding Specifications.

The completed assembly shall be given one shop coat of No. 1 paint.

TW indicates transverse welded.

TB indicates transverse bolted.

Frame and grate shall fit to a max. rock of 0.093" at any point.

Restrict use to grades of 3% or less.

DESIGN APPROVED	STATE OF ARIZONA DEPARTMENT OF TRANSPORTATION DIVISION OF HIGHWAYS STANDARD DRAWINGS	REV. 1/83
APPROVED FOR DISTRIBUTION	CATCH BASIN, GRATES TRANSVERSE BARS	DRAWING NO. C-15.60

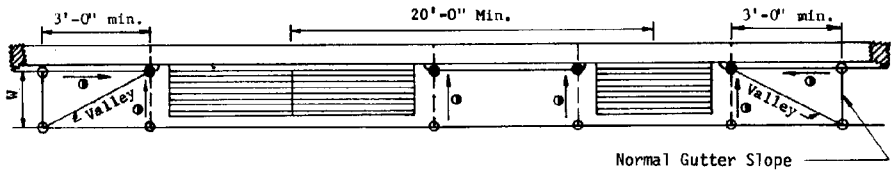

GUTTER DEPRESSION AND SPACING
CATCH BASIN TYPES 1, 4 & 5

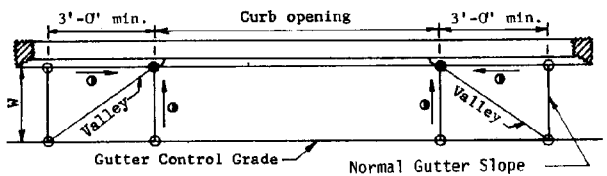

GUTTER DEPRESSION
CATCH BASIN TYPE 3

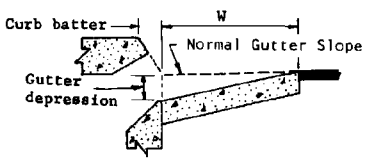

DETAIL NO. 1

LEGEND

Gutter depression: 3" max. (See Detail No. 1)
O = Normal pavement or gutter flow line elev.
● = Depressed elevation.
O = Straight grade with downward slope.
W = Normal gutter width per Std. C-05.10

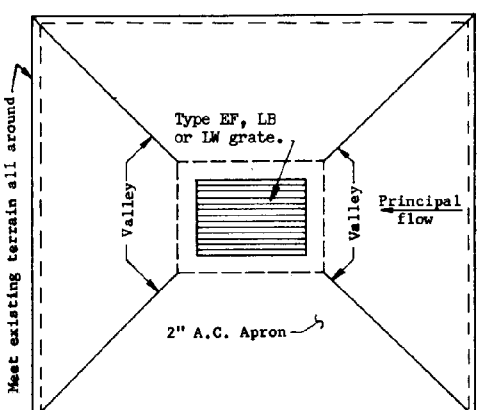

Apron shall be shaped to suit local conditions and shall extend a minimum of 4'-0" from edge of grate in all directions. Grate shall be depressed a minimum of 4" below surrounding terrain and bearing bars shall parallel direction of principal flow.

CATCH BASIN TYPE 4
(Off roadway location)

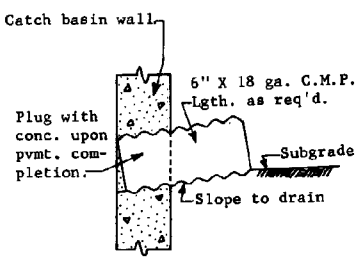

CATCH BASIN
CONSTRUCTION DRAIN
Drain may be deleted at option of Engineer

GENERAL NOTES

No gutter depression shall extend into a traffic lane.

DESIGN APPROVED APPROVED FOR DISTRIBUTION	STATE OF ARIZONA DEPARTMENT OF TRANSPORTATION DIVISION OF HIGHWAYS STANDARD DRAWINGS	REV. 6/86
	CATCH BASIN MISC. DETAILS	DRAWING NO. C-15.70

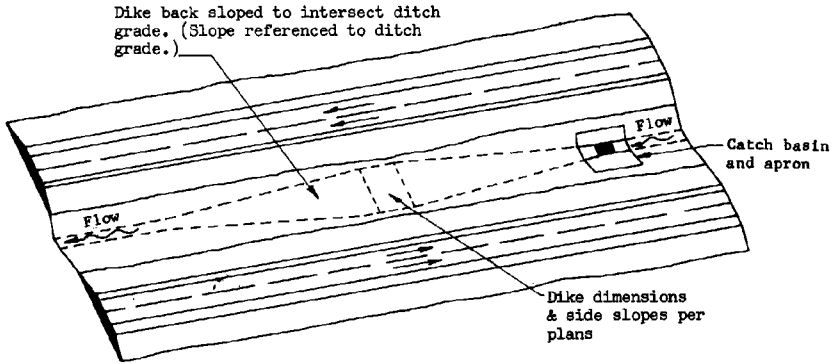

PLAN PERSPECTIVE
ILLUSTRATING 1-WAY FLOW WITH DYKE

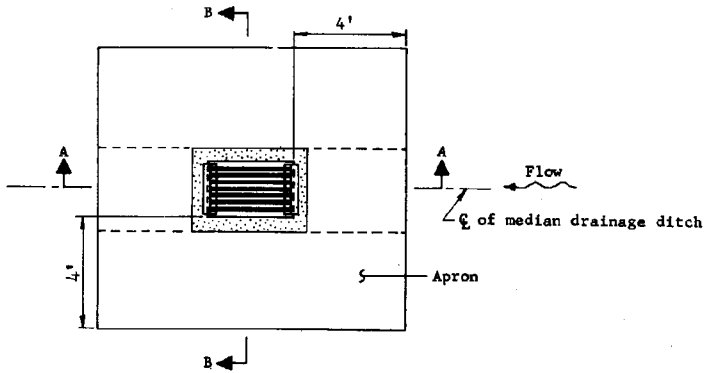

PLAN

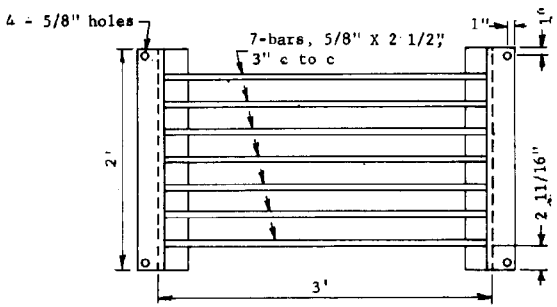

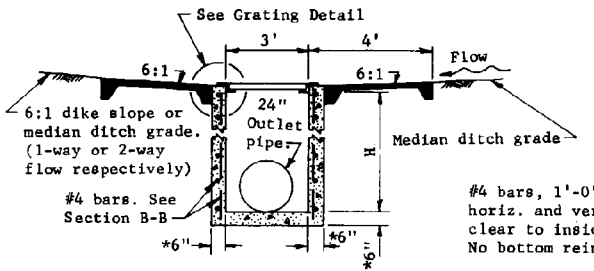

SECTION A-A

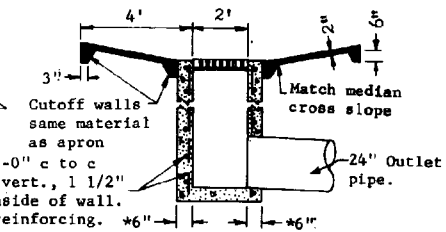

SECTION B-B

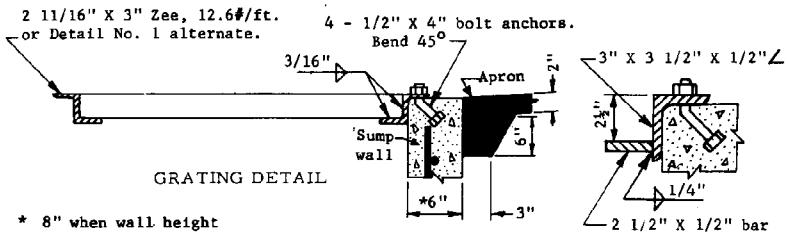

GRATING DETAIL

* 8" when wall height exceeds 8'.

DETAIL NO. 1

GENERAL NOTES

Apron shall be A.C. or P.C. concrete as specified on Plans.
Concrete shall be Class B.
Grating shall be fabricated of structural steel.
Structural steel shall be in accordance with ASTM A 36.
Welding shall be in accordance with Standard Welding Specifications.
Grating assembly shall be given one shop coat of No. 1 paint.
"H" indicated on Plans.

DESIGN APPROVED	STATE OF ARIZONA DEPARTMENT OF TRANSPORTATION DIVISION OF HIGHWAYS STANDARD DRAWINGS	REV. 1/83
APPROVED FOR DISTRIBUTION	CATCH BASIN, MEDIAN FLUSH	DRAWING NO. C-15.80

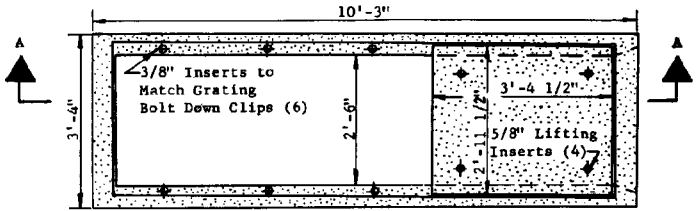

PLAN

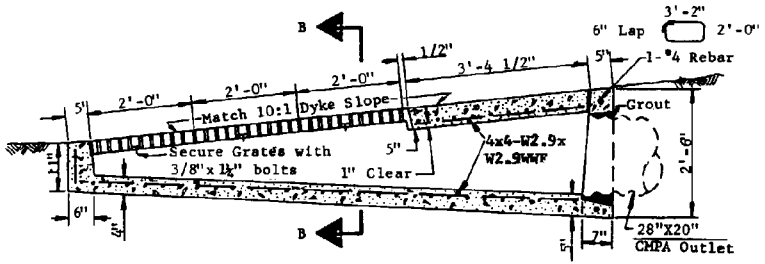

SECTION A-A

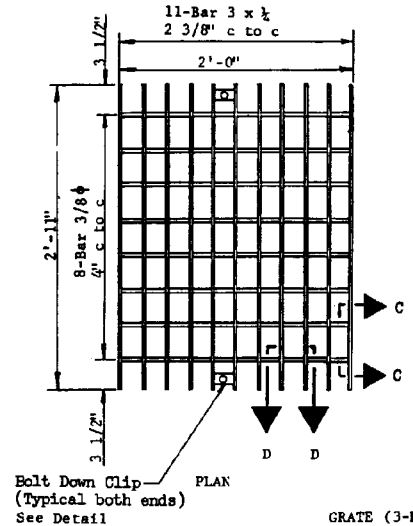

GRATE (3-REQ'D)

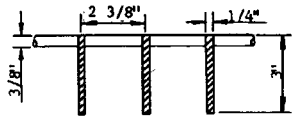

SECT. D-D

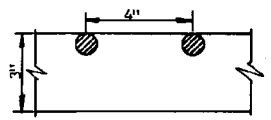

SECT. C-C

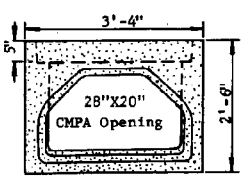

END VIEW

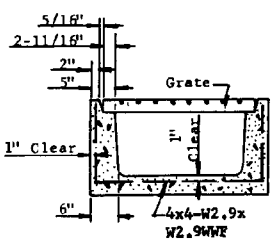

SECTION B-B

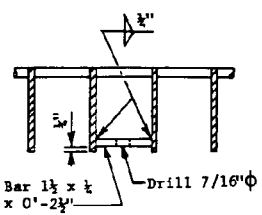

BOLT DOWN CLIP DETAIL

GENERAL NOTES:

1. Concrete shall conform to the requirements for Class S Concrete. The minimum strength shall be 4000 psi.
2. Grout shall be in accordance with Standard Specifications except water content shall be such that the consistancy is proper for smooth trowling.
3. Grate cross rods shall be resistance welded, fillet welded or electro-forged to bearing bars.
4. The completed grate shall be given one shop coat of No. 1 paint.
5. Foundation soil and backfill shall be compacted to not less than 95% of the maximum density determined in accordance with the requirements of the Materials Testing Manual of the Materials Services.

DESIGN APPROVED	STATE OF ARIZONA DEPARTMENT OF TRANSPORTATION DIVISION OF HIGHWAYS STANDARD DRAWINGS	REV 6/86
APPROVED FOR DISTRIBUTION	CATCH BASIN, MEDIAN DYKE, PRECAST	DRAWING NO. C-15.90

General Notes:
1.) All concrete shall be Class "B".
2.) All reinforcing steel shall conform to 1003-1, 2, Grade 40.
3.) All reinforcing steel shall have 2" min. clear cover unless otherwise noted.
4.) Reinforcing steel shall be No. 4 rebar, 12" C to C horiz. & vertical in walls.
5.) Pipe can be placed in any wall.
6.) For more information & dimensions of Slotted Drains see Detail C-13.60 & C-13.65
7.) In the wall Section "A-A", T = 6" when H = 8' or less or T = 8" when H is over 8'.

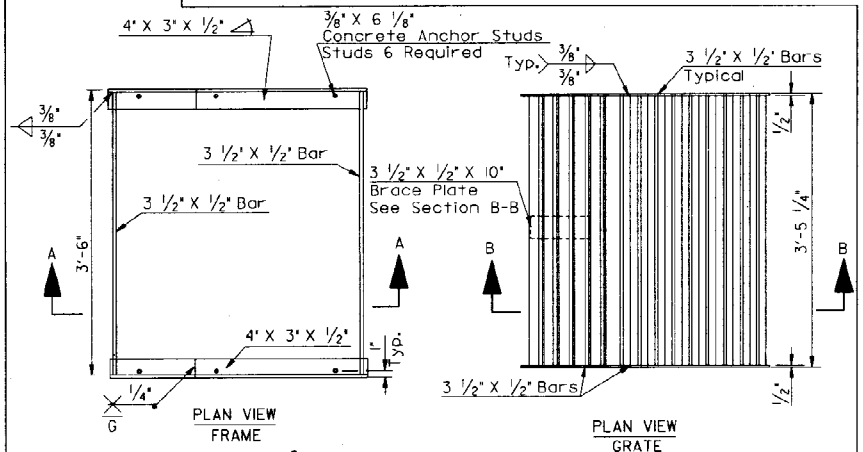

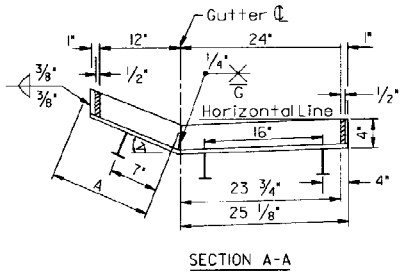

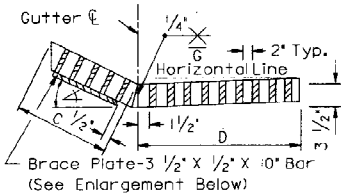

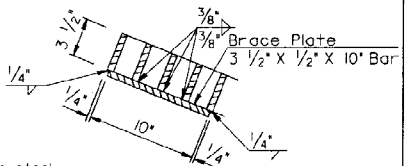

NOTES
1.) All Structural Steel shall be in accordance with A.S.T.M. Spec's A-36.
2.) All Reinforcement Steel shall conform to 1003-1, 2, Grade 40.
3.) All Welding shall be in accordance with A.D.O.T. specifications.
4.) The completed Grate assembly (Frame & Grate) shall be given two shop coats of No. 1 paint.
5.) The installation and inspection of steel studs welded to steel acting as connection devices to the concrete shall conform to the American Welding Society's Structural Welding Code (AWS D1.1), Specifications 4.21-4.27.

CATCH BASIN
FRAME & GRATE

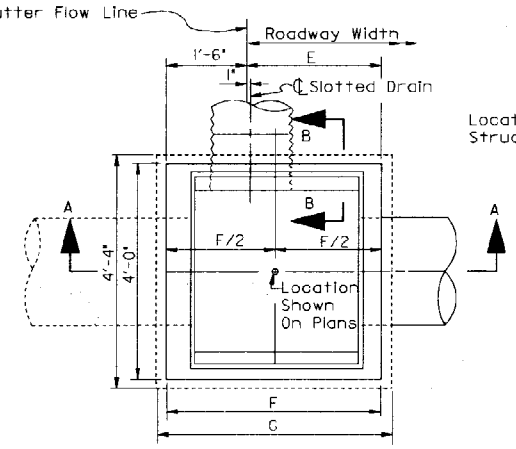

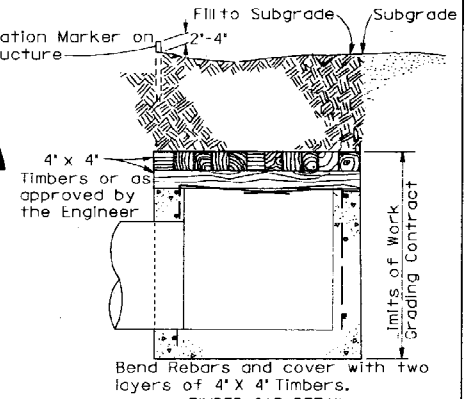

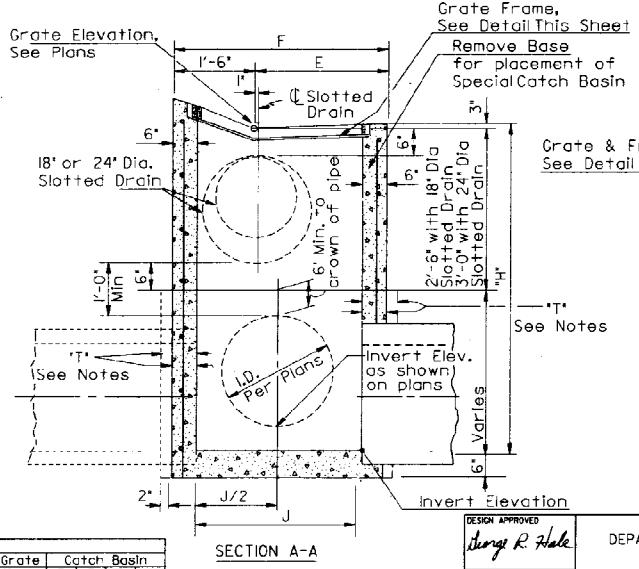

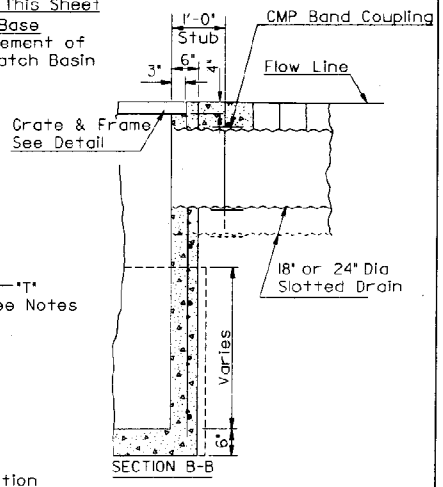

CATCH BASIN

Curb & Gutter Dimensions

Type	Curb Height	Gutter Width	Catch Basin Frame A	Catch Basin Frame C	Catch Basin Frame ∡	Catch Basin Grate D	Catch Basin Grate ∡	Catch Basin E	Catch Basin F	Catch Basin G	Catch Basin J
B	6"	2'-6"	13 15/16"	12 1/16"	26°-57'-40"	23 3/8"	26°-57'-40"	2'-6"	4'-0"	4'-4"	3'-0"
C	3"	2'-6"	13 5/16"	11 7/8"	18°-14'-22"	23 3/8"	18°-14'-22"	2'-6"	4'-0"	4'-4"	3'-0"

DESIGN APPROVED
George R. Hale
APPROVED FOR DISTRIBUTION
August 1, 1989

STATE OF ARIZONA
DEPARTMENT OF TRANSPORTATION
DIVISION OF HIGHWAYS
STANDARD DRAWINGS

10/89

FREEWAY CATCH BASIN DETAILS

DRAWING NO. C-15.91

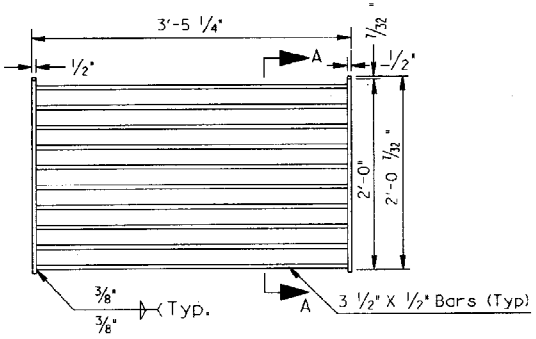

GRATE - Plan View

See General Note No. 7

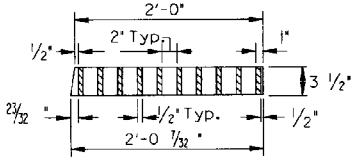

Section A-A

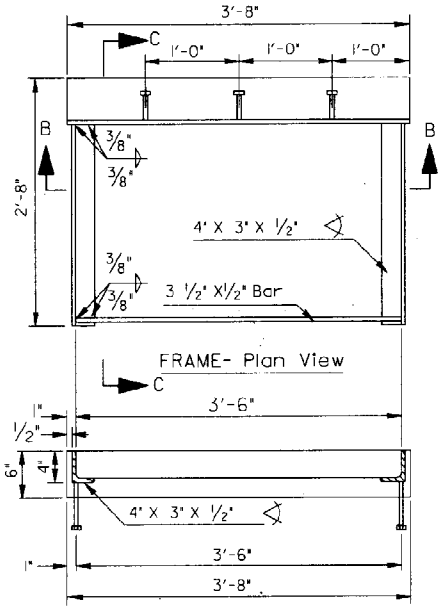

Section B-B

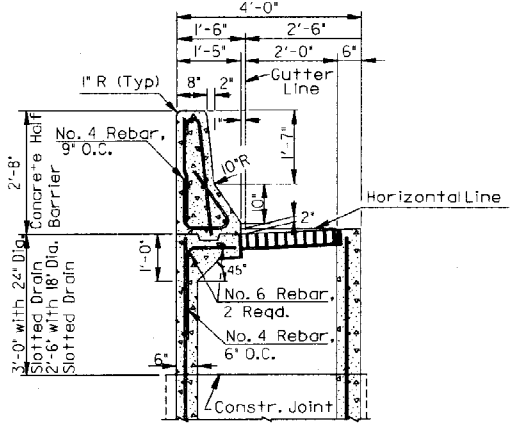

Catch Basin With Half Barrier

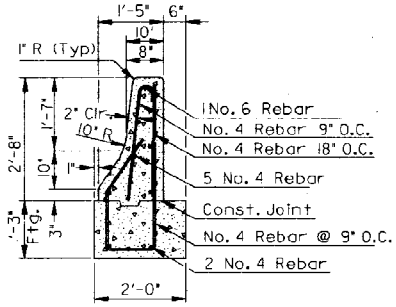

Reinforcing Detail

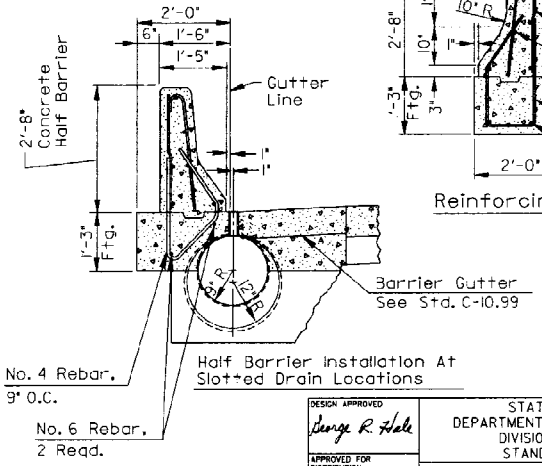

Half Barrier Installation At Slotted Drain Locations

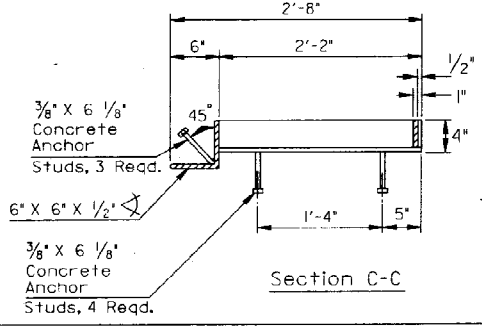

Section C-C

GENERAL NOTES:

1. For dimensions, sizes and details not shown for installation of catch basin and half barrier, see Std. C-15.91
2. For dimensions, sizes and details not Shown for installation of slotted drain, see Std. C-13.60
3. Unless otherwise noted, reinforcement steel in half barrier for installation with catch basin and slotted drain, shall conform to sizes and number specified.
4. The installation and inspection of steel studs welded to steel acting as a connection device to the concrete shall conform to AWS D1.1 and Specifications 4.21-4.27.
5. Where applicable, see Std. C-10.09 for weep hole placement.
6. For additional general notes, see Std. C-10.99.
7. Grate Design is not suitable for locations subject to Bicycle traffic. See Std. C-10.99.

DESIGN APPROVED *George R. Hale*	STATE OF ARIZONA DEPARTMENT OF TRANSPORTATION DIVISION OF HIGHWAYS STANDARD DRAWINGS	10-89
APPROVED FOR DISTRIBUTION	CATCH BASIN WITH HALF BARRIER	DRAWING NO. C-15.92

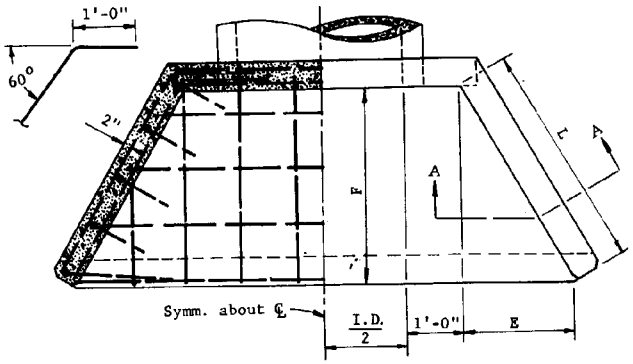

PLAN

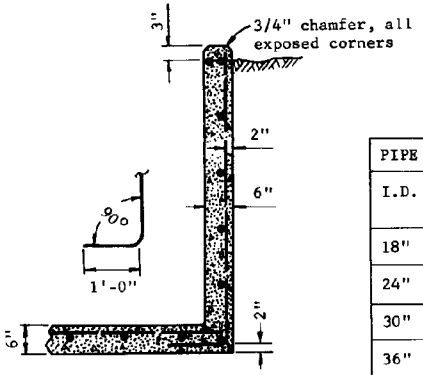

SECTION A-A

PIPE	DIMENSIONS			QUANTITIES		
I.D.	L	E	F (Approx.)	C.Y. Conc. C.M.P.	C.Y. Conc. R.C.P.	Reinf. Steel Lbs.
18"	2'-0"	1'-0"	1'-9"	0.97	0.96	65
24"	2'-0"	1'-0"	1'-9"	1.11	1.07	78
30"	3'-0"	1'-6"	2'-7"	1.50	1.44	108
36"	4'-0"	2'-0"	3'-6"	2.08	2.01	150
42"	5'-0"	2'-6"	4'-4"	2.71	2.63	205
48"	6'-0"	3'-0"	5'-2"	3.39	3.30	270
54"	7'-0"	3'-6"	6'-1"	4.14	4.02	335
60"	8'-0"	4'-0"	6'-11"	4.96	4.80	410

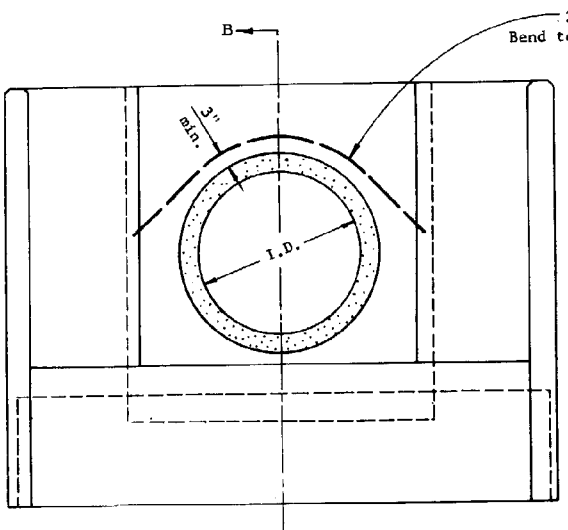

ELEVATION

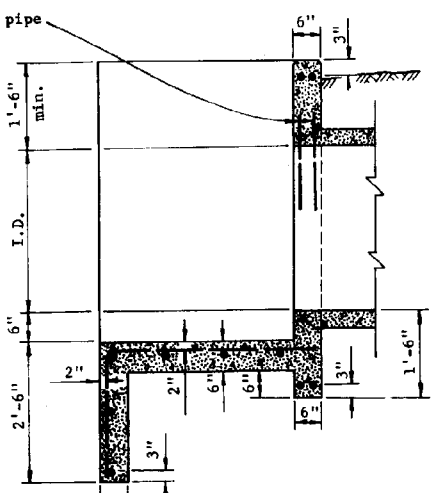

SECTION B-B

GENERAL NOTES

All concrete shall be Class B.

All reinforcing bars shall be #4 except two #6 bars over pipe. Bar spacing approximately 1'-0" c to c unless otherwise noted.

30° wing wall flare shown; 45° normally desirable. See Hydraulics and Utility & R.R. Engr. Divisions.

DESIGN APPROVED	STATE OF ARIZONA DEPARTMENT OF TRANSPORTATION DIVISION OF HIGHWAYS STANDARD DRAWINGS	REV. 1/83
APPROVED FOR DISTRIBUTION	IRRIGATION HEADWALLS 18" TO 60" DIAMETER PIPES	DRAWING NO. C-16.10

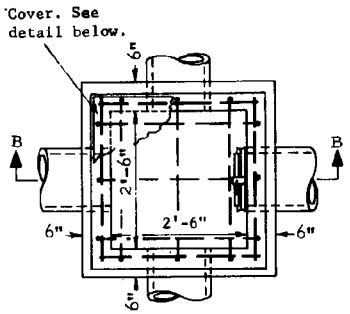

PLAN

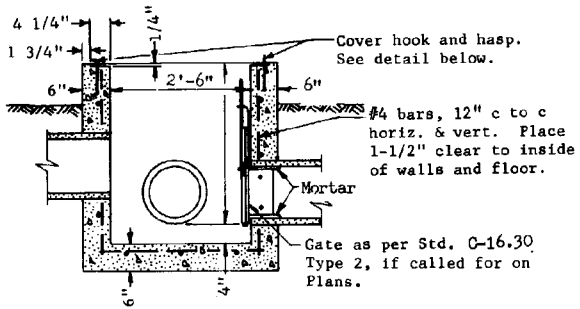

SECTION B-B

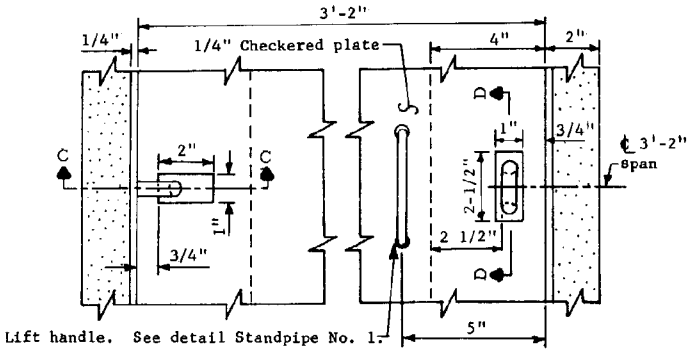

PLAN-LOCKING COVER

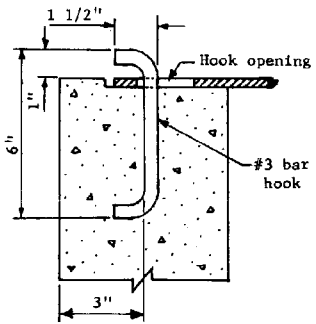

SECTION C-C

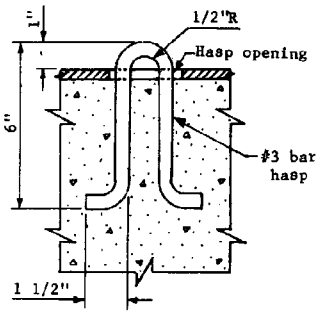

SECTION D-D

IRRIGATION STANDPIPE NO. 2

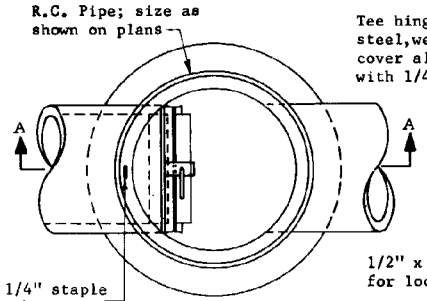

PLAN

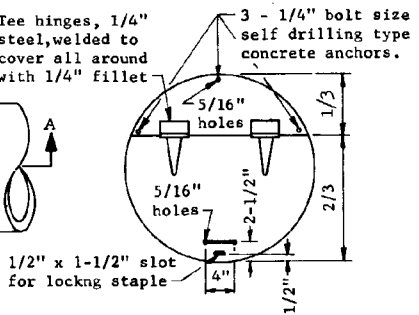

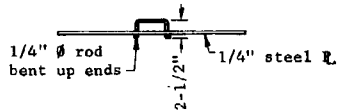

COVER FOR NO. 1 STANDPIPE

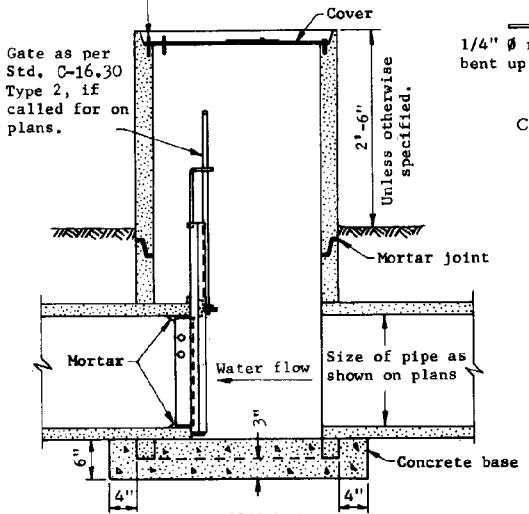

SECTION A-A

IRRIGATION STANDPIPE NO. 1

GENERAL NOTES

All concrete shall be Class B.

Structural steel shall be in accordance with ASTM A 36.

All cover steel and exposed appurtenances shall be given one shop coat of No. 1 paint.

Plans shall specify locked or bolted cover for Standpipe No. 2

For specific details of a flush pavement or sidewalk installation, see Utility & Railroad Engineering Div.

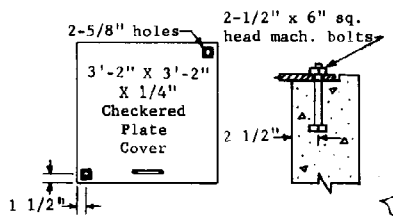

BOLTED COVER FOR STANDPIPE NO. 2

DESIGN APPROVED	STATE OF ARIZONA DEPARTMENT OF TRANSPORTATION DIVISION OF HIGHWAYS STANDARD DRAWINGS	REV. 1/83
APPROVED FOR DISTRIBUTION	IRRIGATION STANDPIPES	DRAWING NO. C-16.20

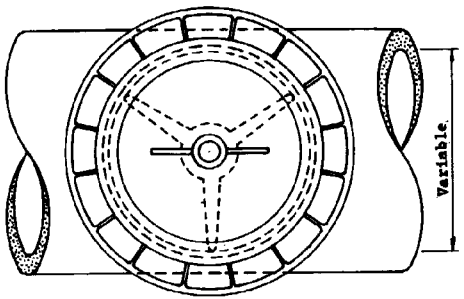

PLAN

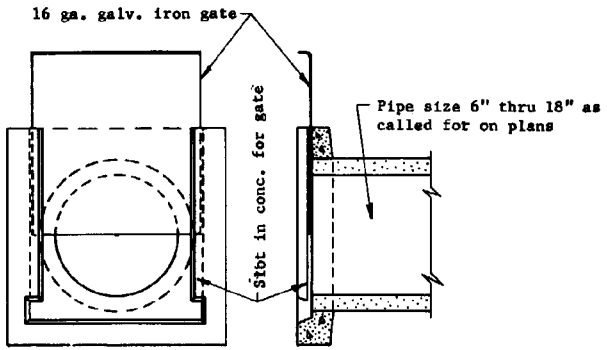

ELEVATION SECTION

PRECAST IRRIGATION GATE
For open ditch installation
TYPE 1

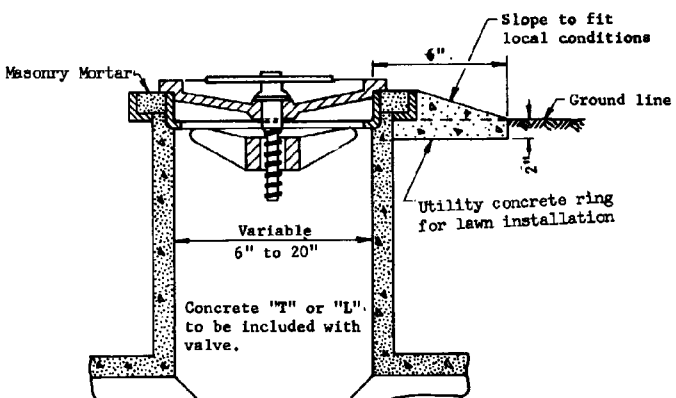

Irrigation Valve Number of valve shall correspond to the size of the pipe in inches. No. 6 to No. 20.

PART SECTION
FLUSH IRRIGATION VALVE

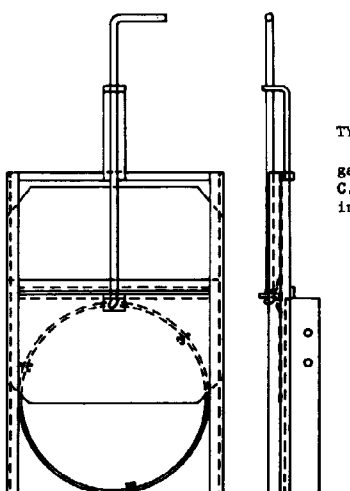

ELEVATION SECTION

IRRIGATION GATE
For standpipe installation
TYPE 2

TYPE 2

For pipes 6" through 24". Gate and frame shall be galvanized iron. Type shown is for concrete pipe. For C.M.P., external steel adjustable band shall be used in place of internal steel ring.

DESIGN APPROVED	STATE OF ARIZONA DEPARTMENT OF TRANSPORTATION DIVISION OF HIGHWAYS STANDARD DRAWINGS	REV. 1/83
APPROVED FOR DISTRIBUTION	IRRIGATION VALVE & GATE	DRAWING NO. C-16.30

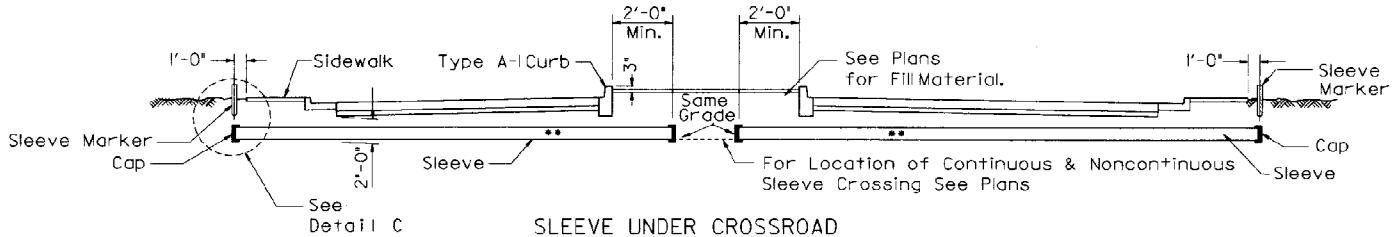

SLEEVE UNDER CROSSROAD

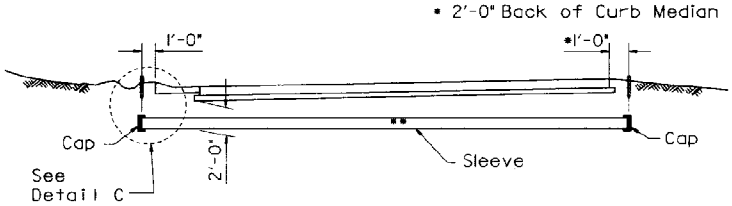

SLEEVE UNDER MAINLINE

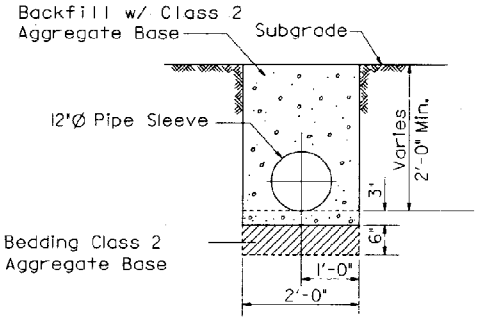

TYPICAL INSTALLATION

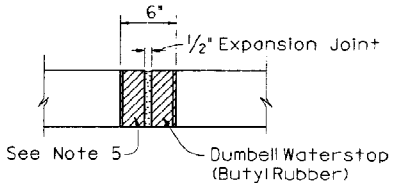

DUMBELL WATERSTOP

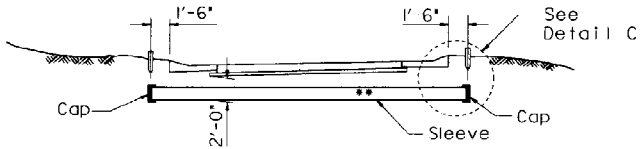

SLEEVE UNDER RAMP

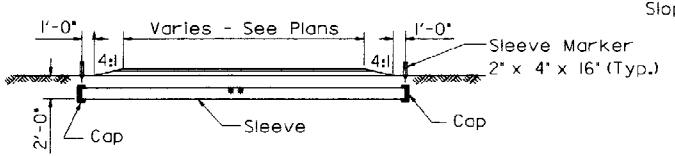

SLEEVE UNDER DRIVEWAYS AND PARKING AREAS

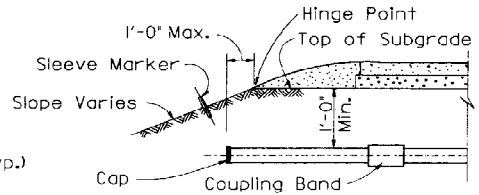

DETAIL C

SLEEVE TERMINATION AT ELEVATED ROADWAY

GENERAL NOTES

1. Irrigation sleeves shall be installed in a trench condition. See Std. C-13.15 and Std. C-7.06
2. Bedding and backfill material shall be Class 2 Aggregate Base.
3. Pipe installation shall conform to Section 501 of Standard Specifications.
4. The Contractor shall imprint a 4"± high letter "S" on the face of all curbs at sleeve locations. The width of the letter shall be 1/2" and shall penetrate the concrete surface 1/2".
5. For non-continuous sleeves under crossroads, Std. C-5.10 Type "A-1" curb shall be required where median is irrigated. See plans for locations. Dumbell waterstop shall be at all expansion joints.

* * Generally, sleeves shall be installed parallel to the roadway subgrade. Slope may vary in superelevated sections. Minimum slope nominal to drain.

DESIGN APPROVED *George R. Hale*	STATE OF ARIZONA DEPARTMENT OF TRANSPORTATION DIVISION OF HIGHWAYS STANDARD DRAWINGS	10/89
APPROVED FOR DISTRIBUTION	IRRIGATION SLEEVES	DRAWING NO. C-16.40

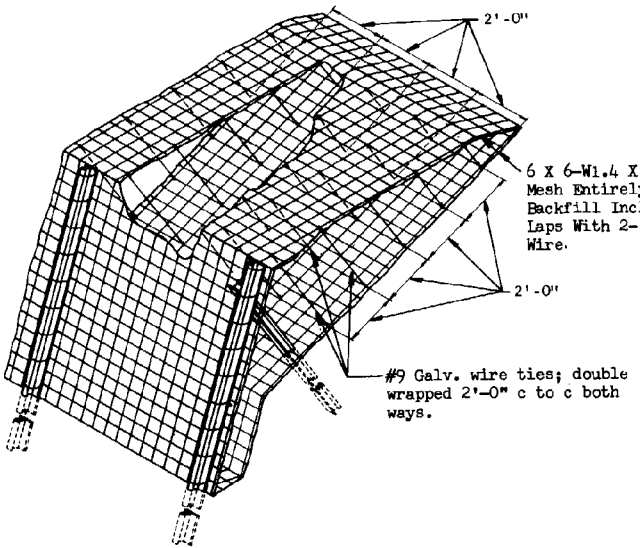

PERSPECTIVE
Drawn For Types 1 & 2. Type 3 Similar

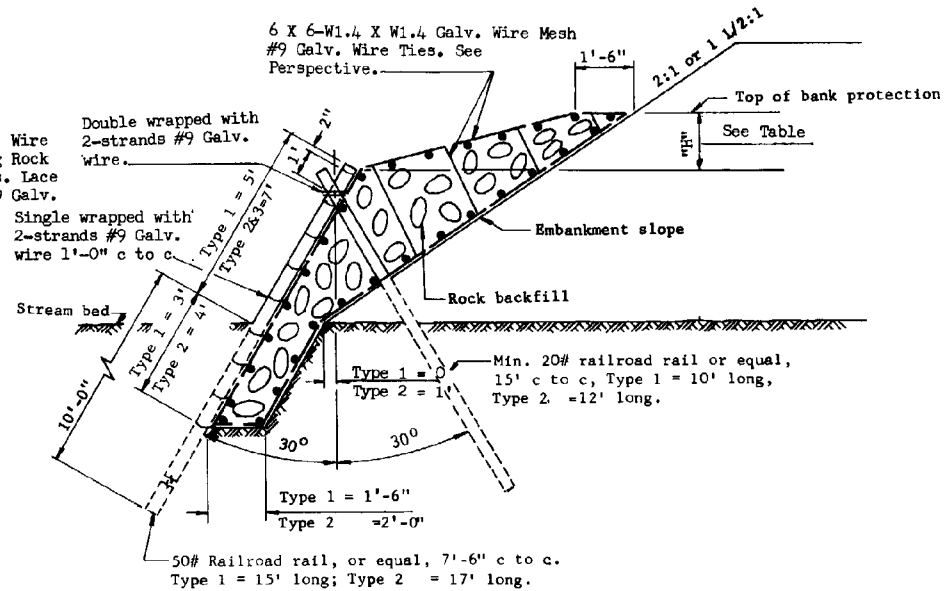

TYPE 1, 2 BANK PROTECTION

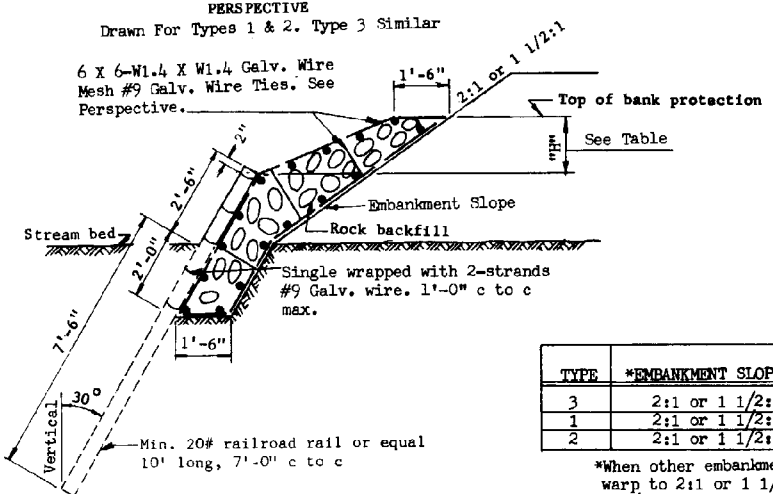

TYPE 3 BANK PROTECTION

TYPE	*EMBANKMENT SLOPE RATE	"H"	TOP OF BANK PROTECTION ABOVE STREAM BED
3	2:1 or 1 1/2:1	0' to 2'	2' to 4'
1	2:1 or 1 1/2:1	0' to 3'	4' to 7'
2	2:1 or 1 1/2:1	0' to 6'	6' to 12'

*When other embankment slope rates are encountered, warp to 2:1 or 1 1/2:1; that is warp 1:1 slope to 1 1/2:1.

GENERAL NOTES

Rock shall be sound and durable, of rounded or angular shape and with a nominal diameter of 8" min. and 12" max. Flat or needle shapes are not acceptable.

Wire mesh splice shall have 6" min. lap vertically and horizontally.

DESIGN APPROVED
APPROVED FOR DISTRIBUTION

STATE OF ARIZONA
DEPARTMENT OF TRANSPORTATION
DIVISION OF HIGHWAYS
STANDARD DRAWINGS

REV. 6/86

BANK PROTECTION, RAIL
TYPES 1, 2 & 3

DRAWING NO. C-17.10

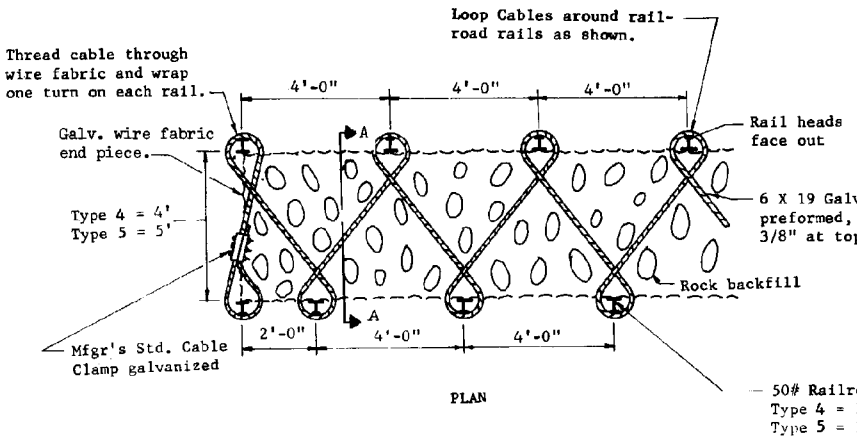

PLAN

TYPES 4 & 5 BANK PROTECTION

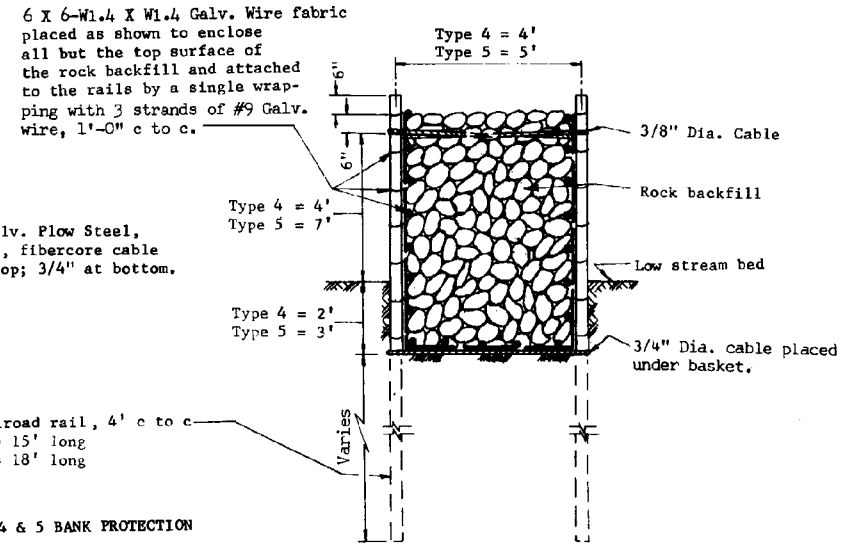

SECTION A-A

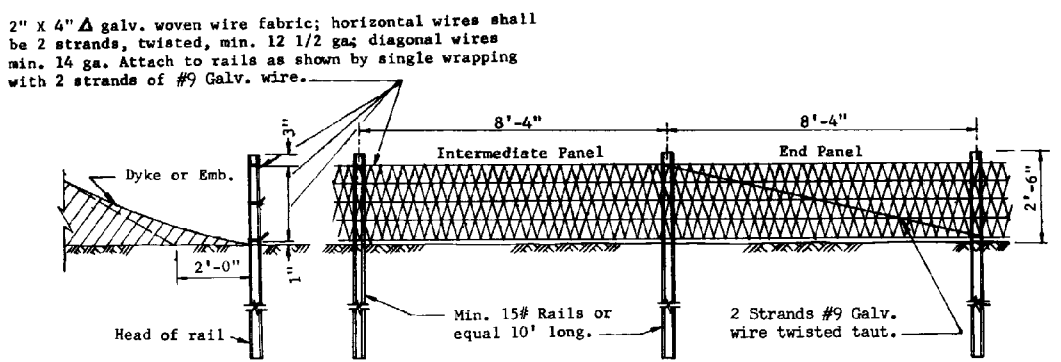

TYPE 6 BANK PROTECTION

GENERAL NOTES

Rock shall be sound and durable, of rounded or angular shape and with a nominal diameter of 8" min. and 21" max. Flat or needle shapes are not acceptable. Rock shall be comprised of 50% min. 8" to 12" and 5% max. 18" to 21".

Wire mesh splice shall have 6" min. lap vertically and horizontally.

DESIGN APPROVED APPROVED FOR DISTRIBUTION	STATE OF ARIZONA DEPARTMENT OF TRANSPORTATION DIVISION OF HIGHWAYS STANDARD DRAWINGS	REV. 6/86
	BANK PROTECTION, RAIL TYPES 4, 5 & 6	DRAWING NO. C-17.20

HALF PLAN

BRICK CONCRETE

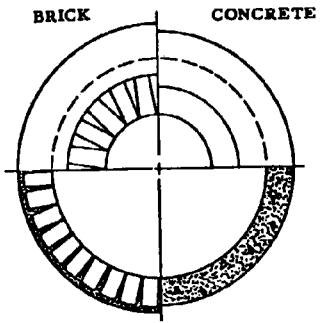

SECTION A-A

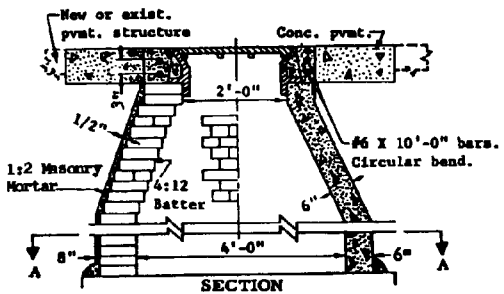

SECTION

BRICK MANHOLE NO. 1

CONCRETE MANHOLE NO. 2

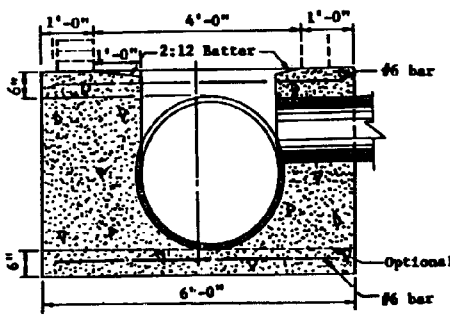

SECTION
STANDARD BASE STRUCTURE
FOR PIPES 6" TO 36" I.D.

HALF PLAN
PIPES 36" I. D. & SMALLER

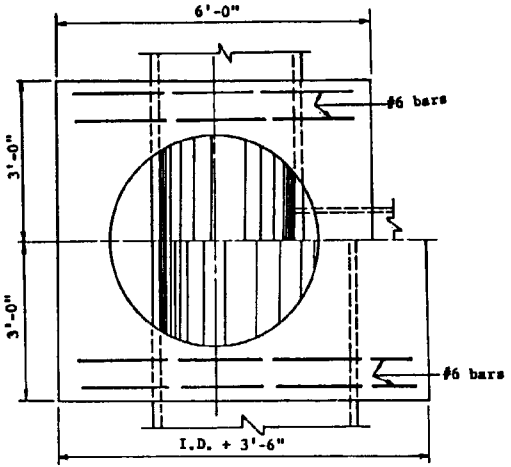

HALF PLAN
PIPES OVER 36" I. D.

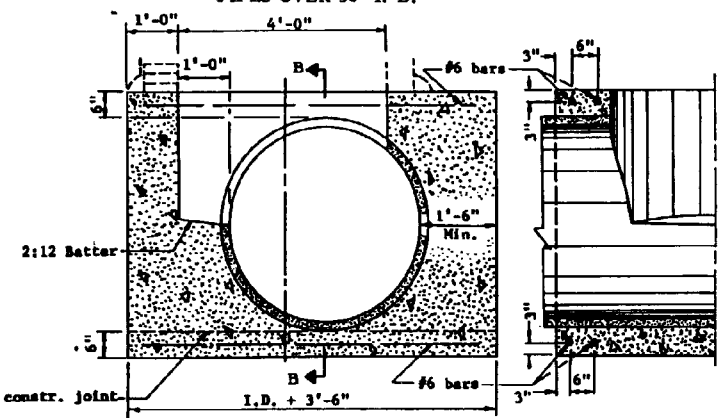

SECTION
STANDARD BASE STRUCTURE
FOR PIPES OVER 36" I. D.

PART SECTION
B-B

GENERAL NOTES

1. Precast Manholes shall conform to the requirements of AASHTO M 199 except that the compressive strength of each unit will be determined and accepted in accordance with Section 1006.7 of the ADOT Specifications.
2. Concrete for all other manholes shall be Class B.
3. Every fifth course of bricks in Manhole No. 1 shall be laid as stretchers.
4. For manhole cut and replacement of bituminous or concrete pavement see Std. C-7.30.
5. For Std. C-18.20 frame and cover type, see Plans.
6. Steps shall be placed in manholes in accordance with the requirements of AASHTO M 199.

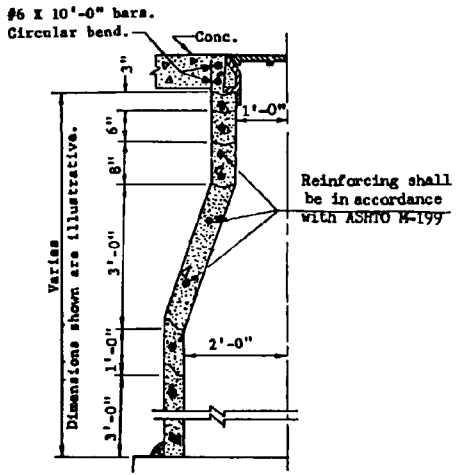

HALF SECTION
MANHOLE NO. 3
PRECAST REINFORCED CONCRETE

DESIGN APPROVED	STATE OF ARIZONA DEPARTMENT OF TRANSPORTATION DIVISION OF HIGHWAYS STANDARD DRAWINGS	REV. 3/88
APPROVED FOR DESIGN	MANHOLE DETAILS	DRAWING NO. C-18.10

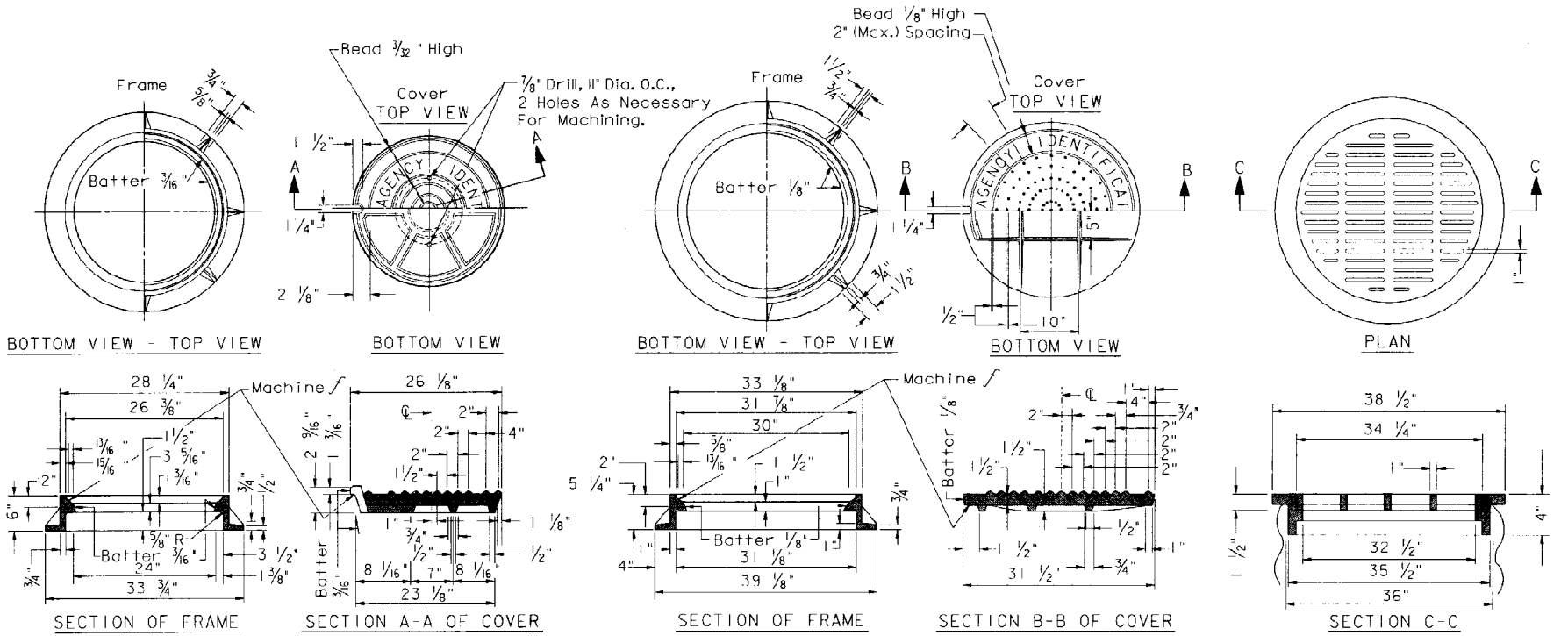

24" MANHOLE FRAME & COVER

Approx. Wt: Frame 205 lbs.
Cover 200 lbs.

30" MANHOLE FRAME & COVER

Approx. Wt: Frame 224 lbs.
Cover 324 lbs.

36" CMP FRAME & GRATE

Approx. Wt: Frame & Cover = 330 lbs.

GENERAL NOTES

1. When 'Type A' cover (24" or 30") is specified on the plans then the cover shall include agency identification and conform to the following: Lettering on manhole cover to contain name of agency and utility or as directed. Letters and words to be equally spaced. Letters to be 2" in height and raised 1/8" above level of cover. Type of letters and layout to be submitted for approval. Castings shall be painted or dipped in commercial quality asphaltum paint, unless otherwise specified.
2. Weight of castings shall not be more than 2% less than the approximate weight specified.
3. H20 loading minimum.
4. Details shown are typical.
5. Alternate designs of manhole frame and cover may be utilized with the approval of the engineer as long as minimum loading and weight are equivalent.

DESIGN APPROVED George R. Hale	STATE OF ARIZONA DEPARTMENT OF TRANSPORTATION DIVISION OF HIGHWAYS STANDARD DRAWINGS	REV. 10/89
APPROVED FOR DISTRIBUTION	MANHOLE FRAME AND COVER DETAILS	DRAWING NO. C-1B.20

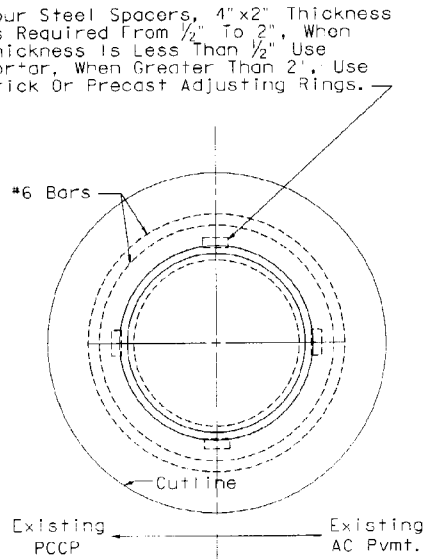

PLAN

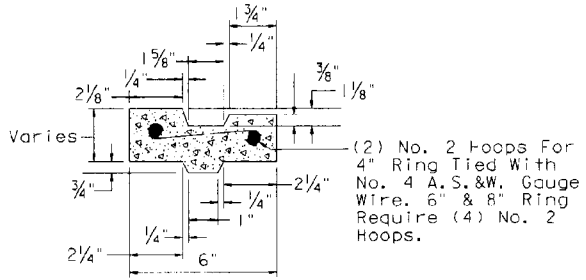

PRECAST ADJUSTING RING DETAIL

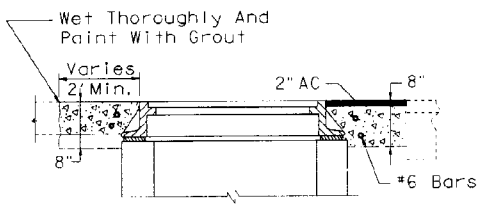

SECTION

MANHOLE COVER FRAME ADJUSTMENT - PAVEMENT CUT AND REPLACEMENT

GENERAL NOTES

1. All dimensions are minimum except where noted.
2. Location & elevation shown on plans.
3. Compaction to conform to Sect. 303-2 or 501.

DESIGN APPROVED George R. Hale	STATE OF ARIZONA DEPARTMENT OF TRANSPORTATION DIVISION OF HIGHWAYS STANDARD DRAWINGS	10/89
APPROVED FOR DISTRIBUTION	MISCELLANEOUS MANHOLE DETAILS	DRAWING NO. C-18.30

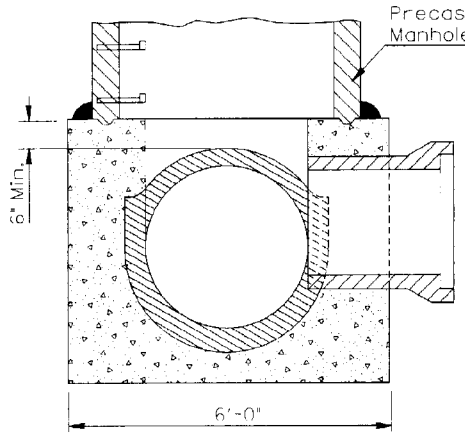

END VIEW

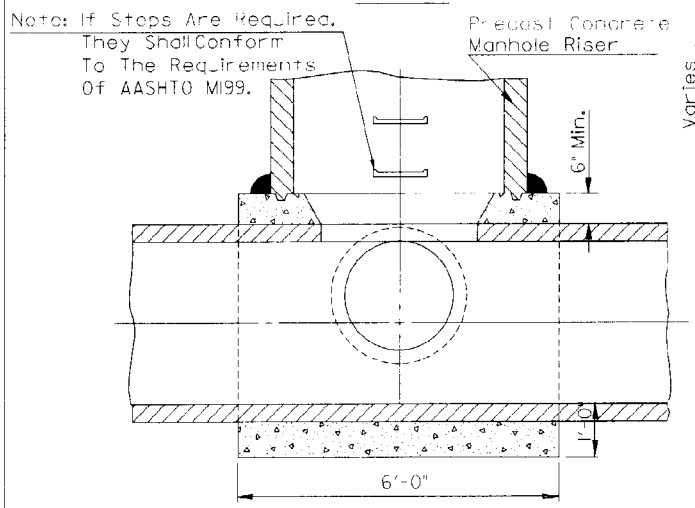

SIDE VIEW

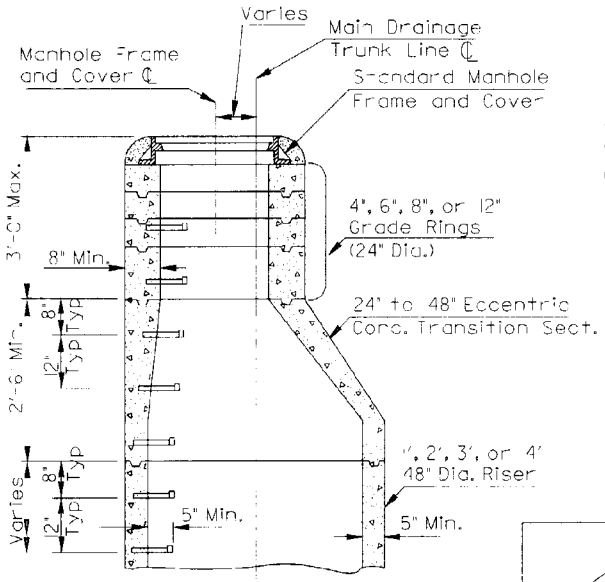

NORMAL INSTALLATION

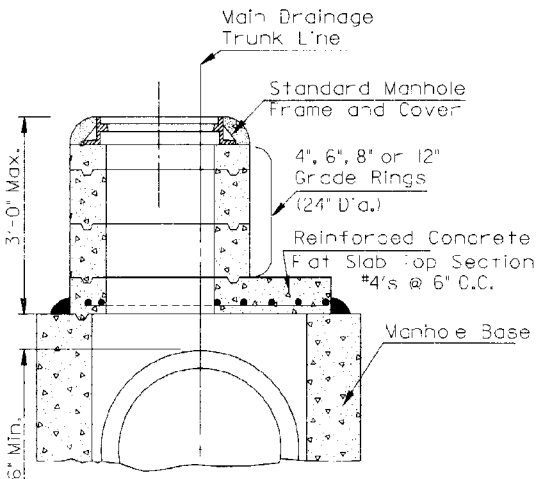

SHALLOW INSTALLATION

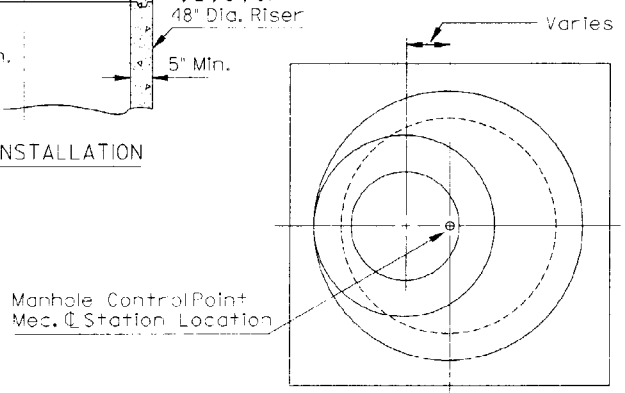

TOP VIEW

DESIGN APPROVED George R. Hale APPROVED FOR DISTRIBUTION	STATE OF ARIZONA DEPARTMENT OF TRANSPORTATION DIVISION OF HIGHWAYS STANDARD DRAWINGS	10/89
	MANHOLE RISER DETAILS	DRAWING NO. C-13.40

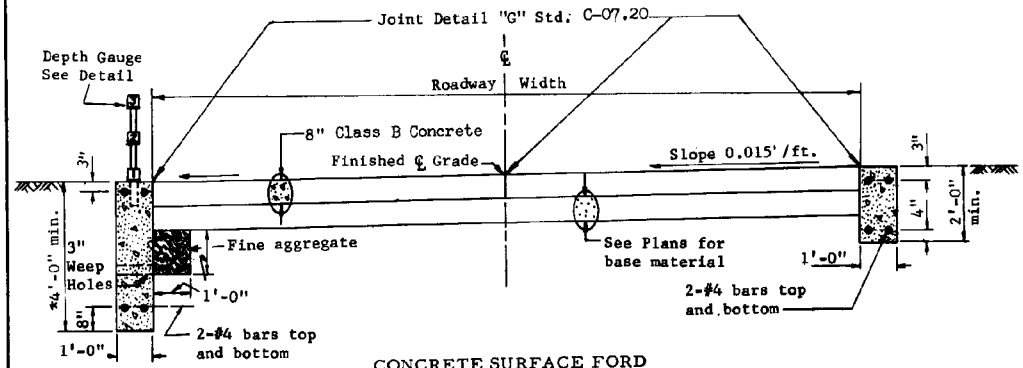

CONCRETE SURFACE FORD
CONCRETE WALLS

*Min. Distance
Below Stream Bed

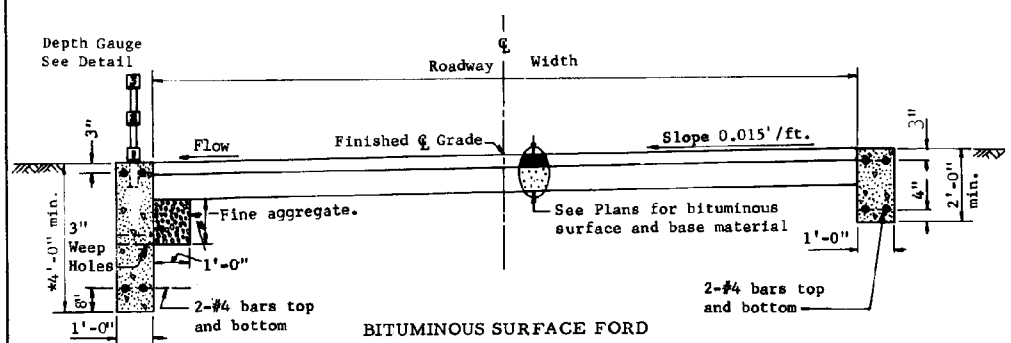

BITUMINOUS SURFACE FORD
CONCRETE WALLS

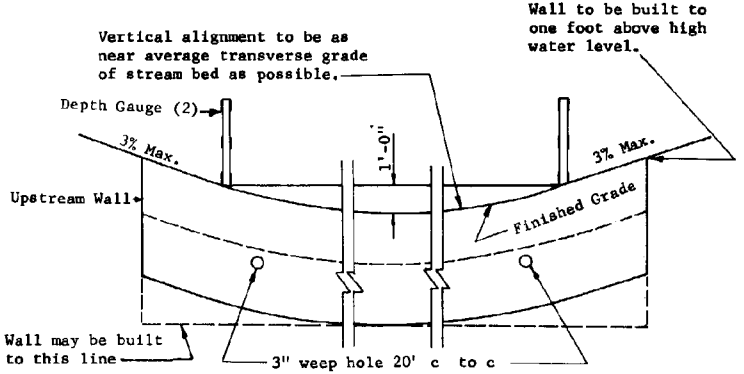

ELEVATION LOOKING UPSTREAM

GENERAL NOTES

Ford walls shall be Class B concrete.

Depth Gauge tubing shall be protected against concrete entering through bottom or perforations.

Depth Gauge tubing and both sides of numeral tabs shall be painted 2- coats white enamel. Numerals and markers shall be 1-coat Gloss black enamel

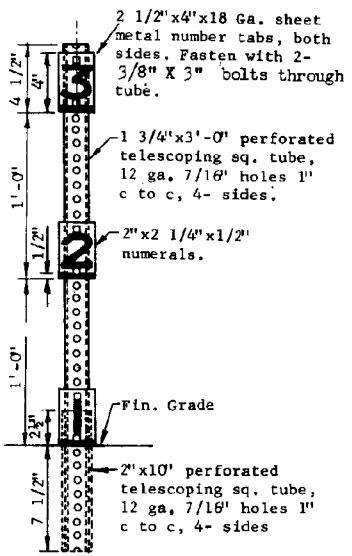

DEPTH GAUGE DETAIL

DESIGN APPROVED	STATE OF ARIZONA DEPARTMENT OF TRANSPORTATION DIVISION OF HIGHWAYS STANDARD DRAWINGS	REV. 1/83
APPROVED FOR DISTRIBUTION	FORD - CONCRETE WALLS	DRAWING NO. C-19.10

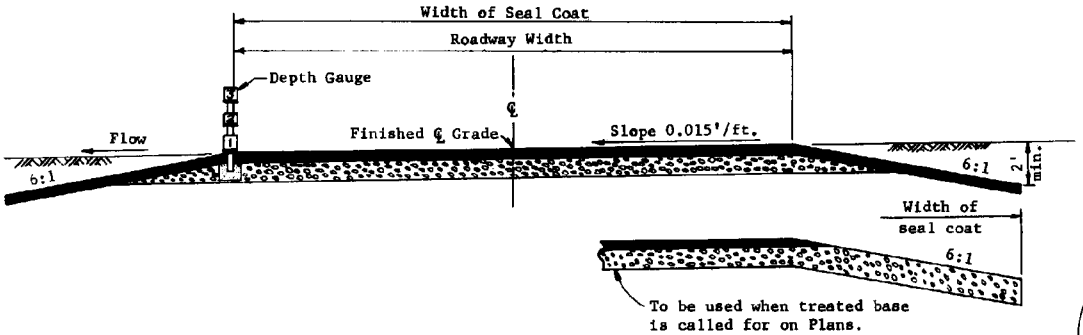

TYPE 1
BITUMINOUS SURFACE FORD

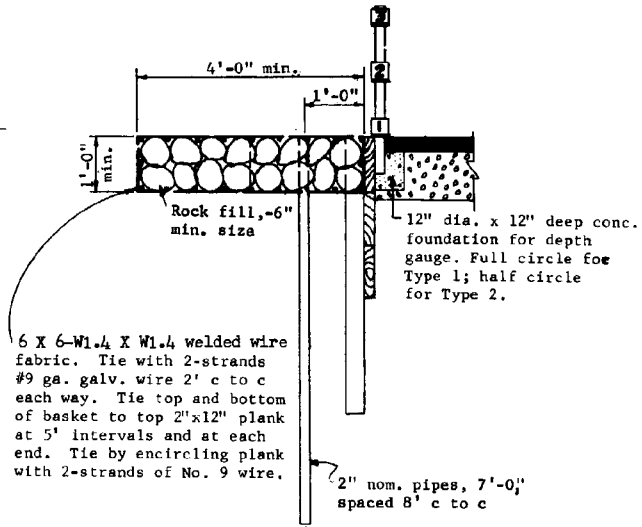

DETAIL A

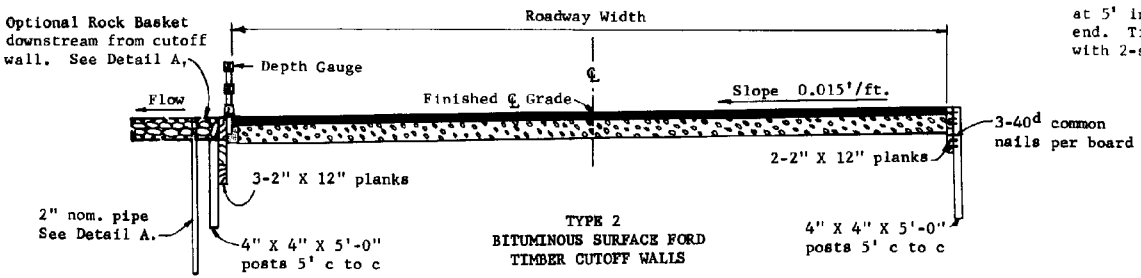

TYPE 2
BITUMINOUS SURFACE FORD
TIMBER CUTOFF WALLS

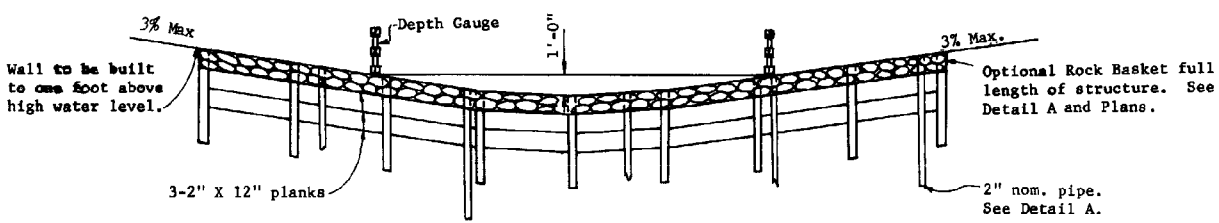

ELEVATION - TYPE 2

GENERAL NOTES

All timber shall be rough, pressure treated and unpainted.

Rock basket, full length of structure, shall be included only when called for on Plans.

See Plans for bituminous surface and base material details.

See Std. C-19.10 for Depth Gauge details.

Depth Gauge foundation may be utility concrete.

DESIGN APPROVED	STATE OF ARIZONA DEPARTMENT OF TRANSPORTATION DIVISION OF HIGHWAYS STANDARD DRAWINGS	REV 1/83
APPROVED FOR DISTRIBUTION	FORDS - TYPES 1 & 2	DRAWING NO. C-19.20

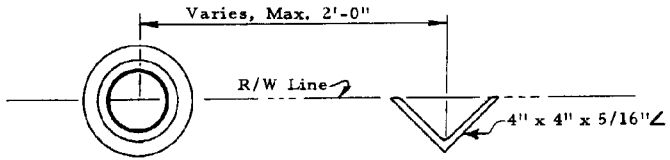

PLAN

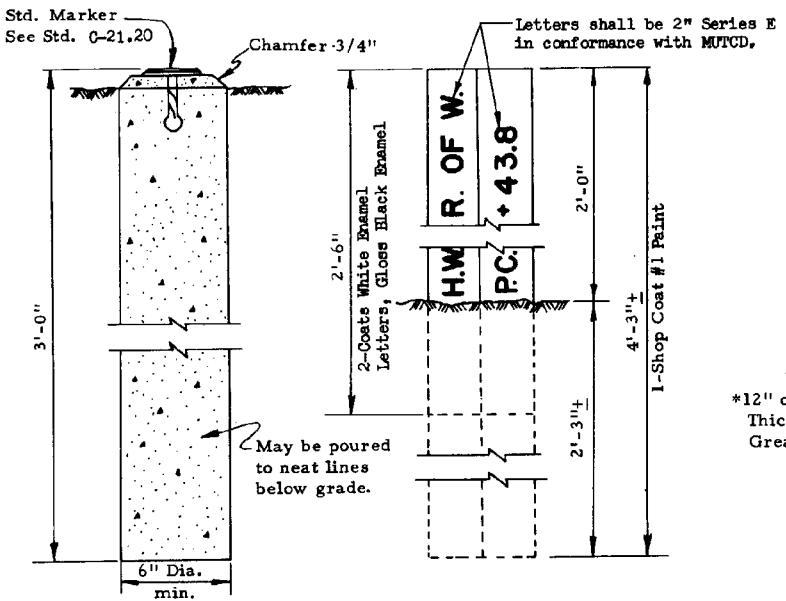

ELEVATION

Survey Monument

ELEVATION

Reference Marker

RIGHT OF WAY MARKER

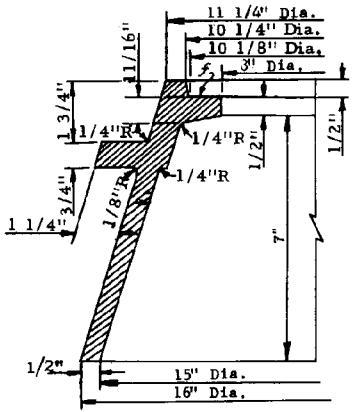

FRAME A

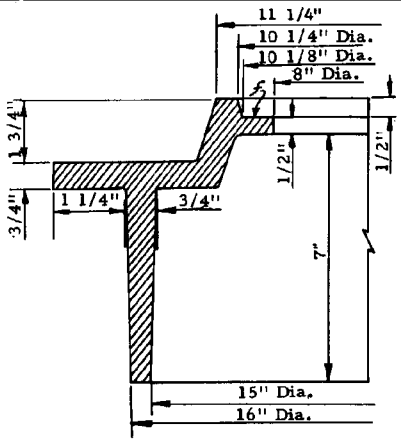

FRAME B

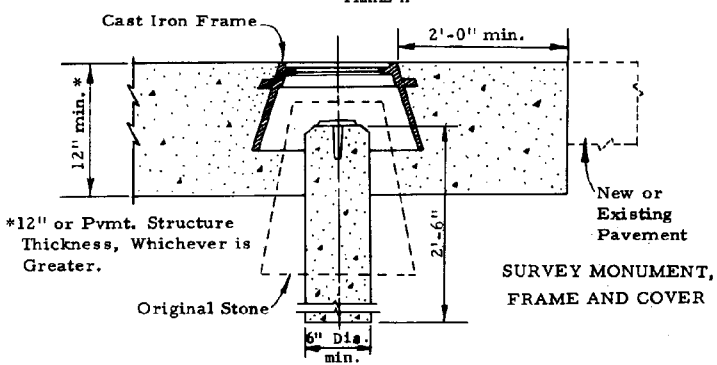

SURVEY MONUMENT,
FRAME AND COVER

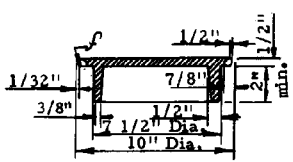

1/8" Fillets Cover Only

COVER SECTION

GENERAL NOTES

A Survey monument, frame and cover, complete in place shall be considered a unit.

A Right-of-way marker, consisting of a survey monument and a reference marker, complete in place shall be considered a unit.

All markers shall be placed as shown on the plans or as directed by the engineer.

Frames may be either Type A or Type B. Frames shall weigh at least 63 pounds.

Covers shall weigh at least 16 pounds.

Portions of frame and cover to be machined is shown by the symbol "ſ". The allowable tolerances for machined areas shall be ± 1/64".

Concrete shall conform to the requirements of the specifications.

DESIGN APPROVED	STATE OF ARIZONA DEPARTMENT OF TRANSPORTATION DIVISION OF HIGHWAYS STANDARD DRAWINGS	REV. 1/83
APPROVED FOR DISTRIBUTION	SURVEY MONUMENT, FRAME AND COVER, RIGHT OF WAY MARKER	DRAWING NO. C-21.10

③	NEW NOTE.
②	MODIFIED DETAIL
①	MODIFIED DETAIL

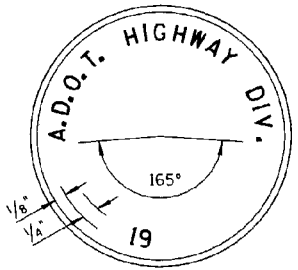

④ PLAN

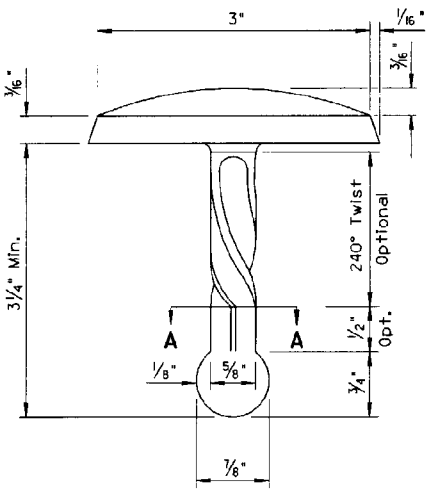

⑤ ELEVATION

STANDARD MARKER

GENERAL NOTES

1. Standard Marker may be used as bench, survey monument or R/W markers.
2. Standard Marker shall be made of brass, bronze or aluminum.
3. Standard Marker will be furnished by the Department. Cast-in lettering format may vary.
4. Bench Marks shall be established on headwalls, bridge curbs or other permanent structures.
5. ① Surfaces of Aluminum Markers in contact with concrete shall be epoxy coated.
6. ② Fluted shank may be straight or twisted.
7. ③ Station, Elevation, Year, or other information shall be hand stamped in field, as approved by the Engineer.

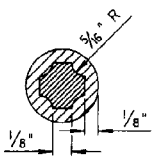

SECTION A-A

DESIGN APPROVED George R. Shelk	STATE OF ARIZONA DEPARTMENT OF TRANSPORTATION DIVISION OF HIGHWAYS STANDARD DRAWINGS	REV. 2-89
APPROVED FOR DISTRIBUTION	STANDARD MARKER	DRAWING NO. C-21.20

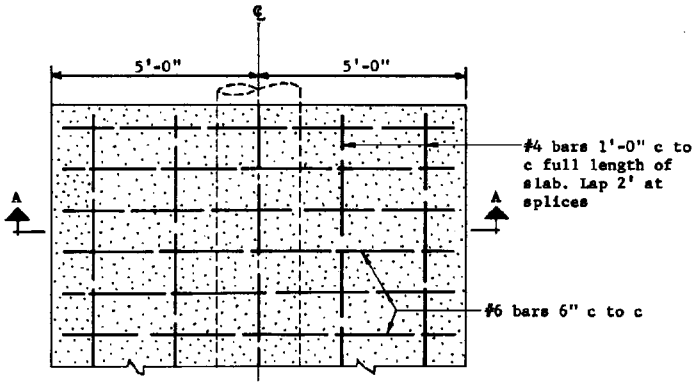

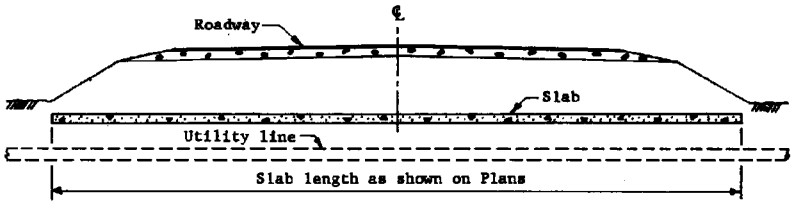

CROSS SECTION

FOR SINGLE INSTALLATION

Quantities per ft. of slab length	
Concrete	Reinforcing Steel
0.31 C.Y.	35.22 lbs.

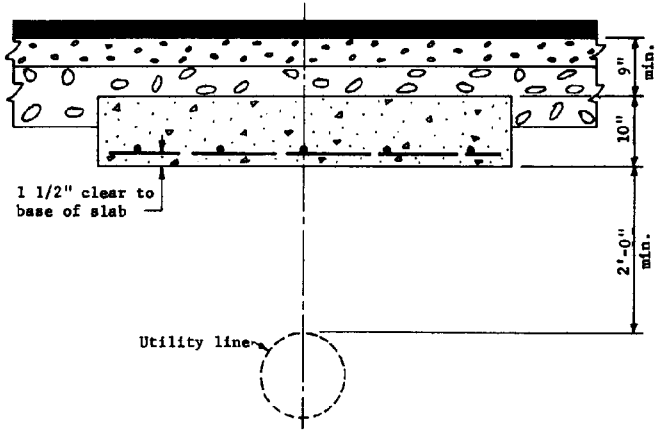

SECTION A-A

GENERAL NOTES
Concrete shall be Class B

DESIGN APPROVED	STATE OF ARIZONA DEPARTMENT OF TRANSPORTATION DIVISION OF HIGHWAYS STANDARD DRAWINGS	REV. 1/83
APPROVED FOR DISTRIBUTION	UTILITY LINE, PROTECTIVE CONCRETE SLAB	DRAWING NO. C-22.10

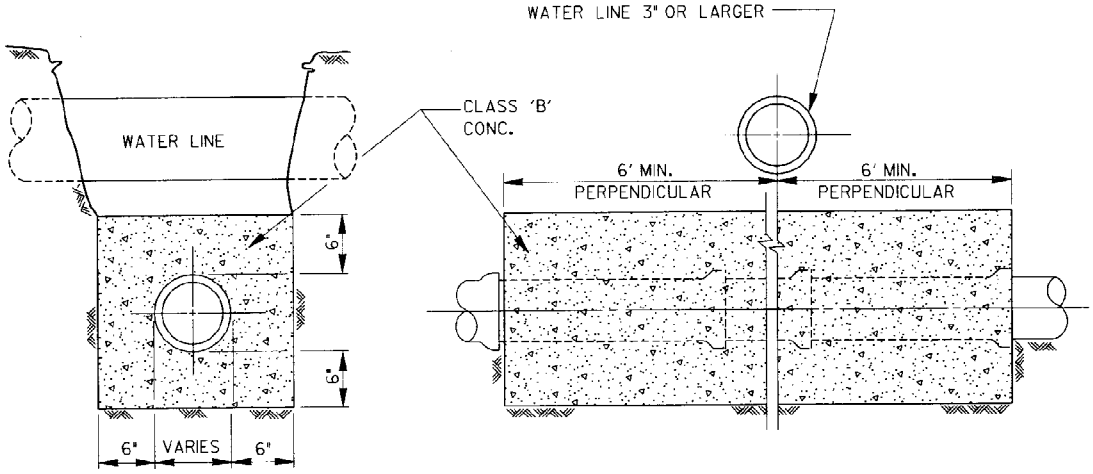

TYPE 'A' ENCASEMENT

TYPE 'A' ENCASEMENT FOR SEWER LATERALS OR HOUSE CONNECTIONS BELOW WATER LINES.

TYPE 'B' ENCASEMENT FOR SEWER LATERALS OR HOUSE CONNECTIONS ABOVE WATER LINES.

NOTES

1. THE ENCASEMENT SHALL EXTEND AT LEAST 6' ON EACH SIDE OF THE WATER LINE AND MUST INCLUDE THE NEAREST JOINT.
2. PROTECTION FOR TYPE 'A' REQUIRED WHEN DISTANCE FROM BOTTOM OF WATER TO TOP OF SEWER LINE IS 24" OR LESS EXCEPT WHEN SEWER IS 4" OR 6" HOUSE CONNECTION NO PROTECTION IS REQUIRED IF DISTANCE IS MORE THAN 12".
3. FOR TYPE A CROSSINGS, CLASS 150 C.I.P. OR DUCTILE PIPE MAY BE USED AS AN ALTERNATE. FOR TYPE B CROSSING REINFORCED ENCASEMENT IS ALWAYS REQUIRED.

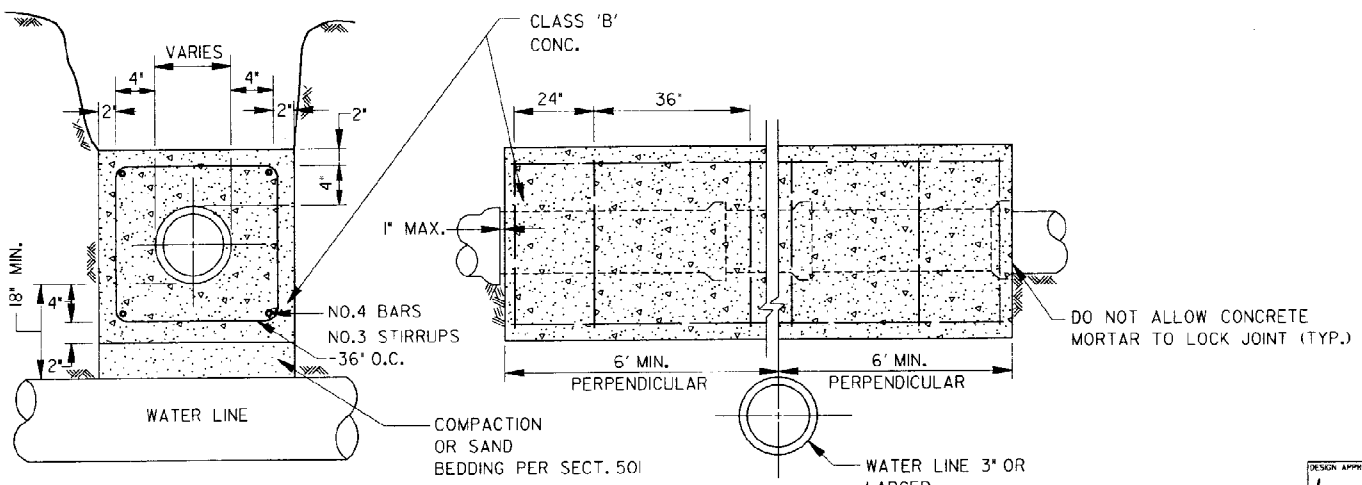

TYPE 'B' ENCASEMENT

DESIGN APPROVED George R. Hale	STATE OF ARIZONA DEPARTMENT OF TRANSPORTATION DIVISION OF HIGHWAYS STANDARD DRAWINGS	10/89
APPROVED FOR DISTRIBUTION	SANITARY SEWER ENCASEMENT	DRAWING NO. C-22.15

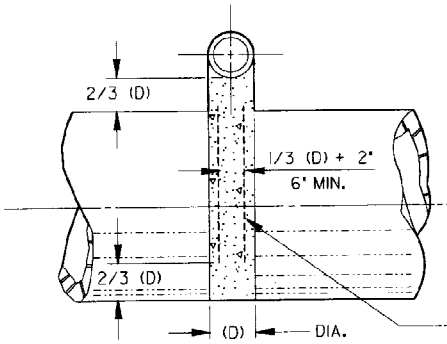

SECTION A-A

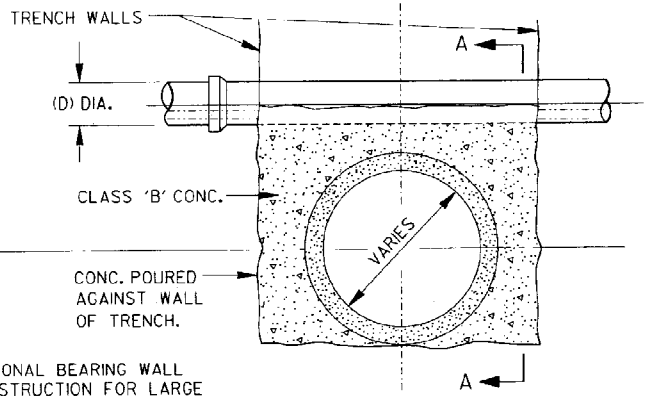

PIPE CONDUIT

TYPE "A"

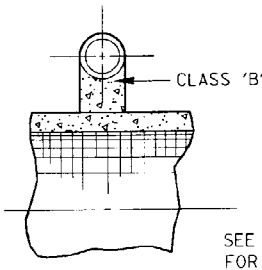

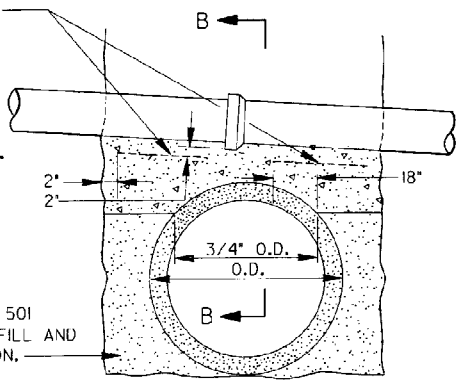

SECTION B-B

TYPE "B"

NOTES

1. TYPE "A" PIPE SUPPORT MAY BE USED FOR ANY TYPE CROSSING CONDITION.
2. TYPE "C" PIPE SUPPORT MAY BE USED FOR CROSSING PIPES WITH A BELL DIAMETER OF 18" OR LESS IF SUFFICIENT CLEARANCE OVER STORM SEWER IS AVAILABLE AND TOTAL SPAN IS LESS THAN 34'.
3. INTERMEDIATE PIPE SUPPORT SHALL BE USED IN CONJUNCTION WITH TYPE "C" PIPE SUPPORT IF TOTAL SPAN EXCEEDS MAX. 'W' IN TABLE.
4. THE CONTRACTOR SHALL BE RESPONSIBLE FOR FURNISHING ALL SUPPORTS BOTH PERMANENT AND TEMPORARY. TEMPORARY SUPPORTS SHALL NOT BE A SEPARATE PAY ITEM.
5. PERMANENT PIPE SUPPORTS MAY BE DECREASED FROM PLAN QUANTITIES OR EXTENDED TO INCLUDE SOME LISTED BELOW AS TEMPORARY SUPPORTS IF CONDITIONS WARRANT THESE CHANGES AT THE TIME OF CONSTRUCTION. DECISION SHALL BE MADE BY THE ENGINEER.
6. WHEN TYPE "A" PIPE SUPPORT IS USED AND WHENEVER SO DIRECTED BY THE ENGINEER, THE CONTRACTOR SHALL PIERCE THE WALL WITH SUITABLE OPENINGS TO PREVENT UNEQUAL PRESSURE RESULTING FROM FLOODING OF THE BACKFILL. THE VOLUME OF THE PIERCED OPENING SHALL NOT EXCEED ½ THE VOLUME OF THE SUPPORTING WALL.
7. USE TYPE "B" PIPE SUPPORT INSTEAD OF TYPE "C" WHEN CLEARANCE IS LESS THAN 'Y' IN TABLE, BETWEEN PIPES.

SCHEDULE OF REQUIRED SUPPORTS

PERMANENT	TEMPORARY	
SEWER LINES	CAST IRON PIPE	CONC. STORM DRAIN
	CONC. IRRIG. PIPE	CONC. BOX CULVERT
	BURIED TELCO.	TRAFFIC CONTROL CONDUIT
	GAS PIPES	WATER & SEWER LINES

NOTE: OTHER UTILITIES AS NOTED ON THE PLANS OR AS REQUIRED BY THE ENGINEER AT TIME OF CONSTRUCTION.

DESIGN APPROVED George R. Hale APPROVED FOR DISTRIBUTION	STATE OF ARIZONA DEPARTMENT OF TRANSPORTATION DIVISION OF HIGHWAYS STANDARD DRAWINGS	10/89
	PIPE SUPPORT ACROSS TRENCHES	DRAWING NO. C-22.20 Sheet 1 of 3

TABLE				
'W'	DEPTH OF COVER ON SUPPORTS			
	0' TO 8'		8' TO 16'	
	BAR NO.	Y	BAR NO.	Y
TO 6'	5	8"	6	11"
7'	5	9"	6	12"
8'	5	10"	6	13"
9'	6	11"	6	14"
10'	6	12"	7	15"
11'	6	13"	7	16"
12'	6	14"	7	17"
13'	7	15"	7	19"
14'	7	16"	8	20"
15'	7	17"	8	21"
16'	7	18"		
17'	8	19"		

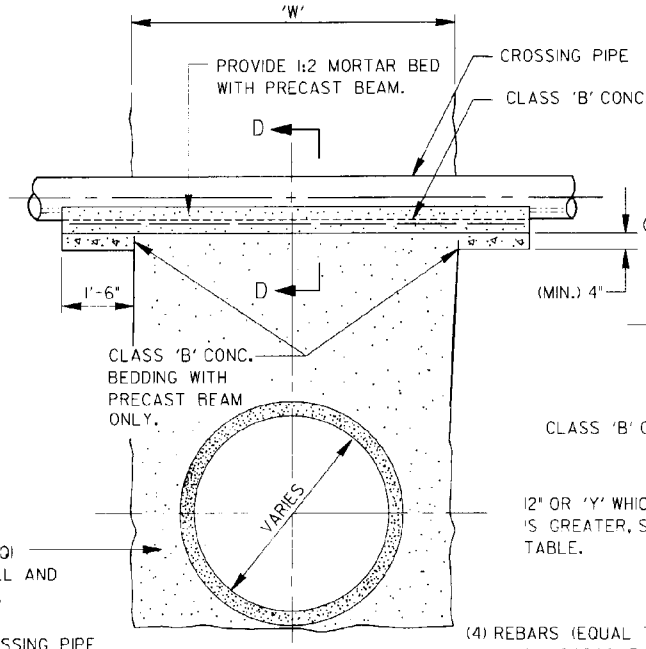

TYPE "C"

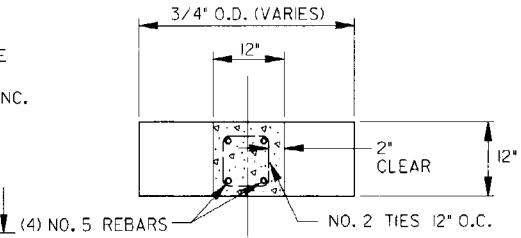

SECTION C-C

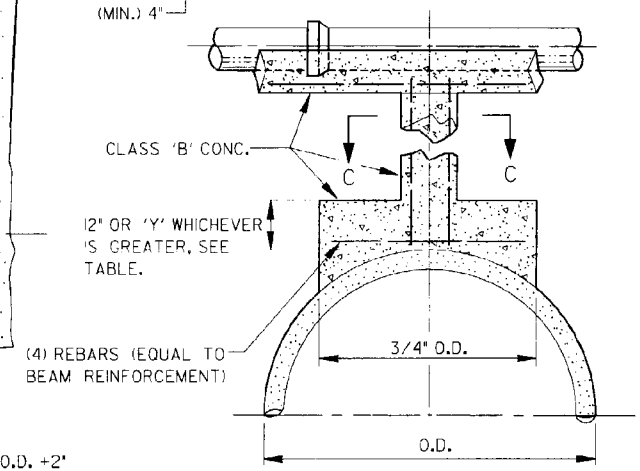

INTERMEDIATE SUPPORT FOR TYPE "B" CROSSINGS

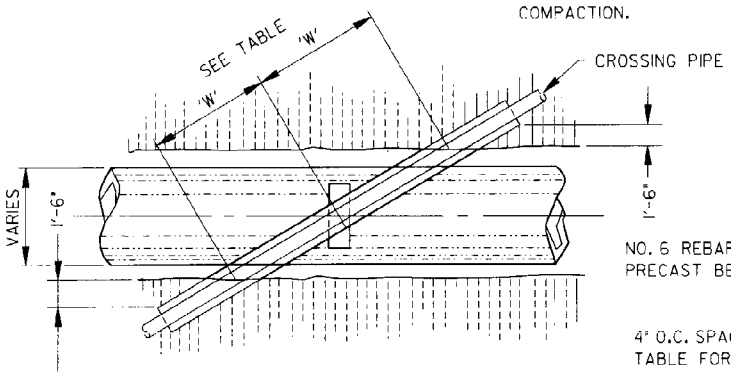

PLAN FOR TYPE "B" SUPPORT

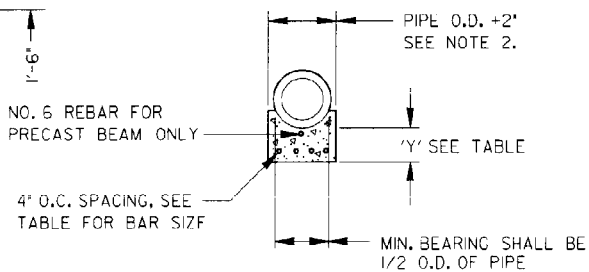

SECTION D-D

DESIGN APPROVED George R. Hale	STATE OF ARIZONA DEPARTMENT OF TRANSPORTATION DIVISION OF HIGHWAYS STANDARD DRAWINGS	10/89
APPROVED FOR DISTRIBUTION [signature]	PIPE SUPPORT ACROSS TRENCHES	DRAWING NO. C-22.20 Sheet 2 of 3

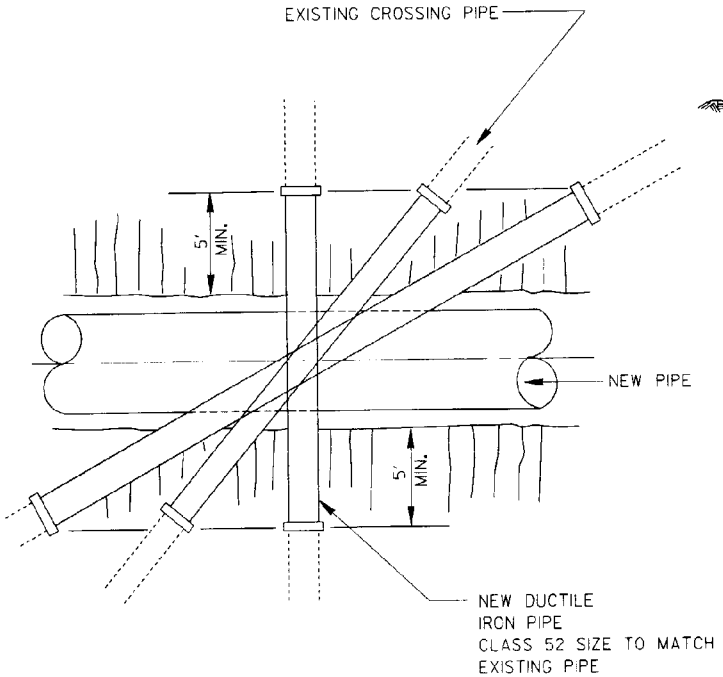

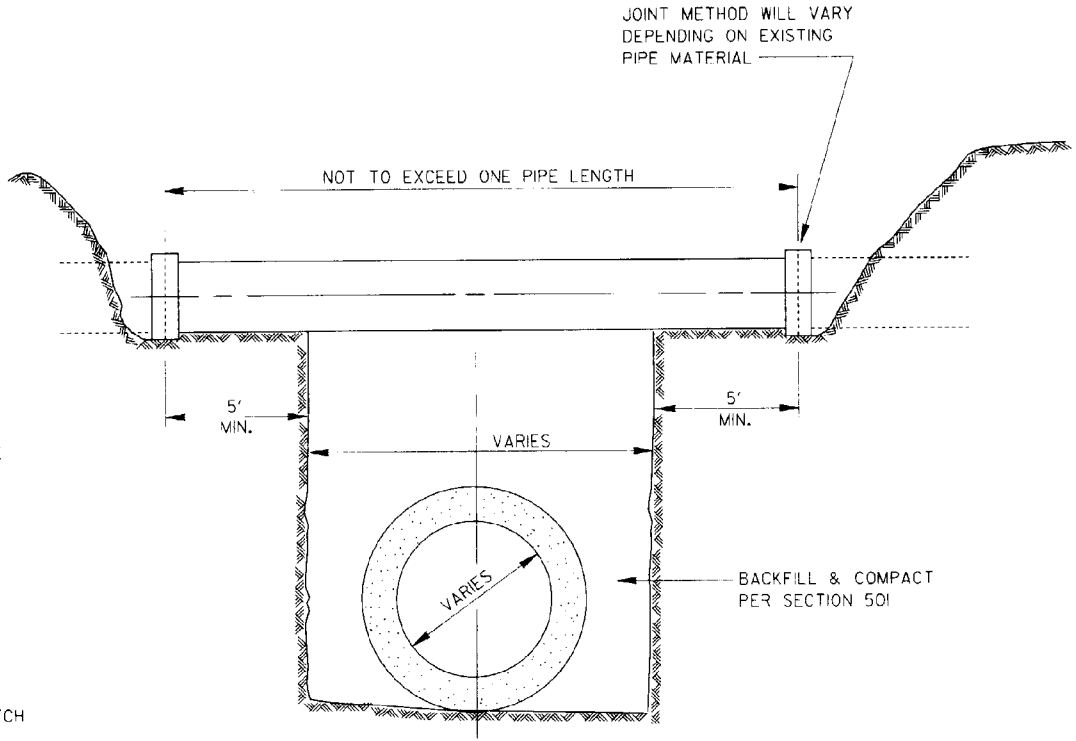

ALTERNATE TO PIPE SUPPORT

DESIGN APPROVED *George R. Hale*	STATE OF ARIZONA DEPARTMENT OF TRANSPORTATION DIVISION OF HIGHWAYS STANDARD DRAWINGS	10/89
APPROVED FOR DISTRIBUTION	PIPE SUPPORT ACROSS TRENCHES	DRAWING NO. C-22.20 Sheet 3 of 3

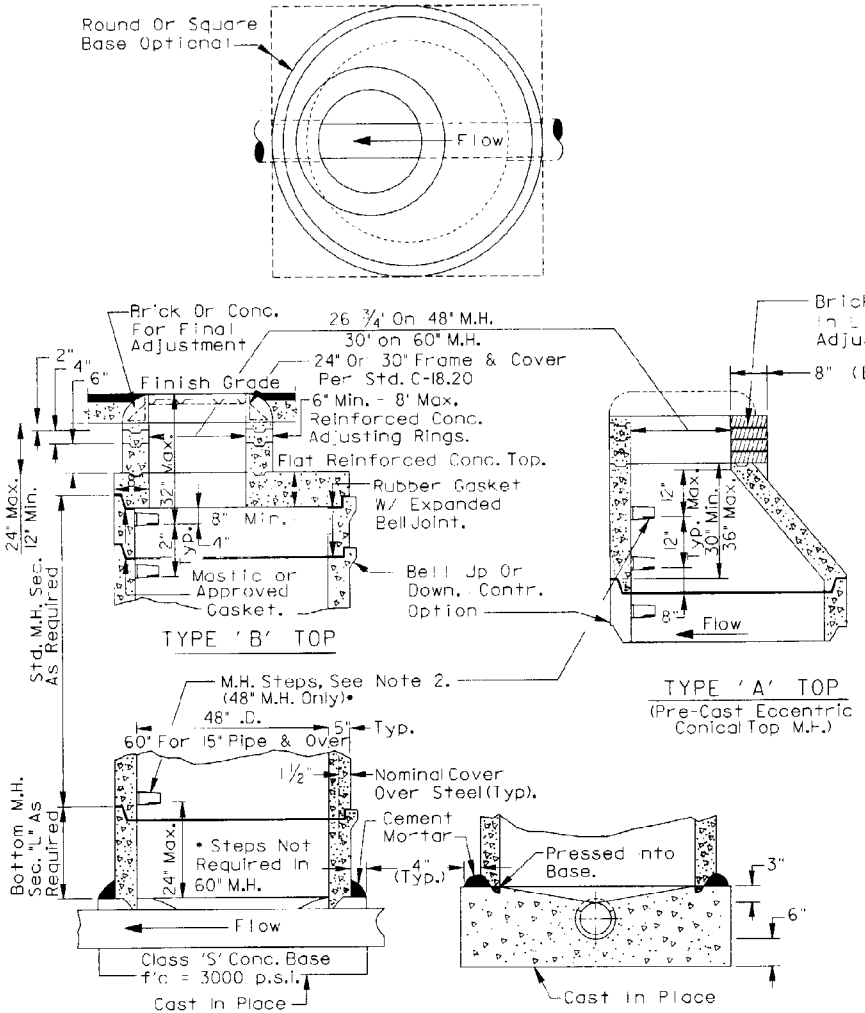

PRECAST SEWER MANHOLE

GENERAL NOTES

1. Pre-cast, reinforced MH sections shall be manufactured in accordance with AASHTO M199 except that the compressive strength of each unit will be determined and accepted in accordance with Section 1006.7 the Specifications.
2. MH steps shall be installed at site of MH section manufacture in accordance with industry standards meeting AASHTO M199 requirements.
3. Use low alkali cement only.
4. Pipe sizes and elevation shown on plans.
5. Frame and cover shall be adjusted to the finished grade prior to placing of the asphaltic concrete or P.C.C.P. surface.

DESIGN APPROVED *George R. Hale*	STATE OF ARIZONA DEPARTMENT OF TRANSPORTATION DIVISION OF HIGHWAYS STANDARD DRAWINGS	10/89
APPROVED FOR DISTRIBUTION	PRECAST SANITARY SEWER MANHOLES	DRAWING NO. C-22.25

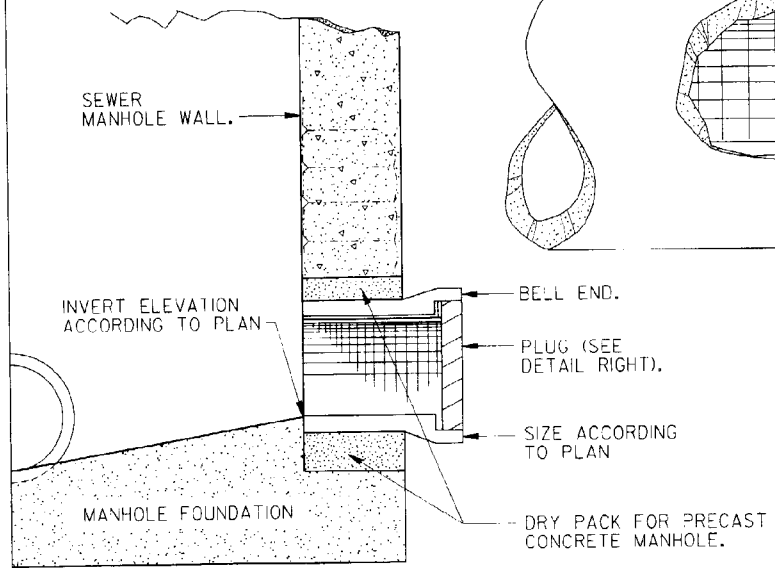

TYPICAL STUB OUT

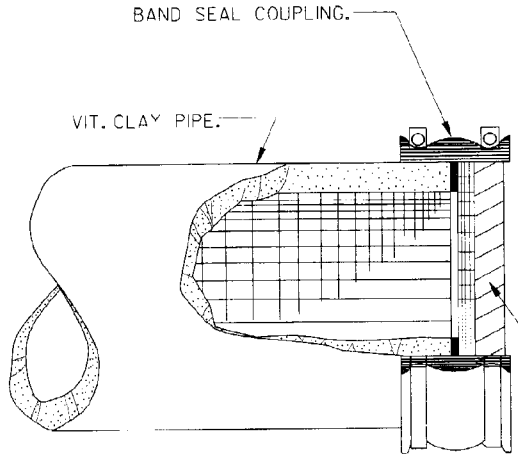

SEWER LINE

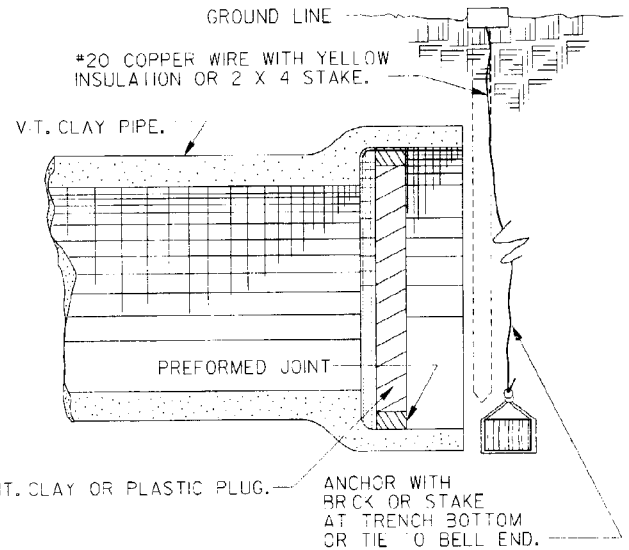

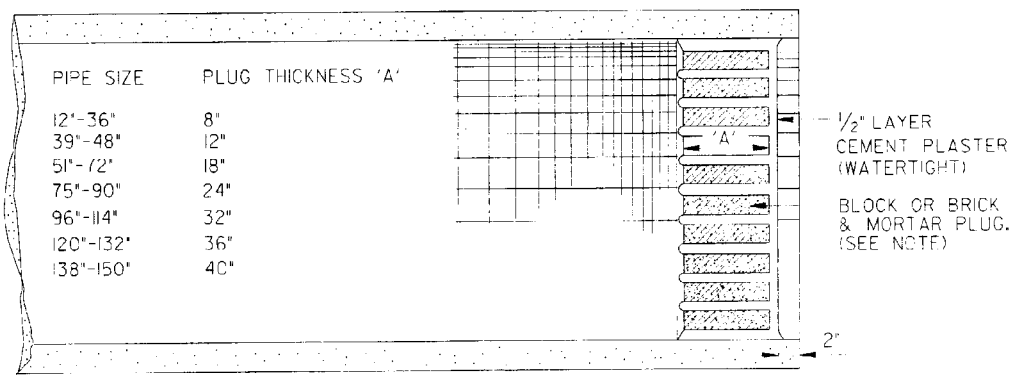

PIPE SIZE	PLUG THICKNESS 'A'
12"-36"	8"
39"-48"	12"
51"-72"	18"
75"-90"	24"
96"-114"	32"
120"-132"	36"
138"-150"	40"

STORM DRAIN LINE

NOTES

1. NOTE: COMPACT SOIL AT END OF PIPE TO 95% OF MAXIMUM DENSITY.
2. IF DEPTH OF COVER IS LESS THAN 5' OR GREATER THAN 10' INCREASE PLUG THICKNESS A MIN. OF 4"

DESIGN APPROVED George R. Hale APPROVED FOR DISTRIBUTION	STATE OF ARIZONA DEPARTMENT OF TRANSPORTATION DIVISION OF HIGHWAYS STANDARD DRAWINGS	10/80
	STUB OUT AND PLUG	DRAWING NO. C-22.30

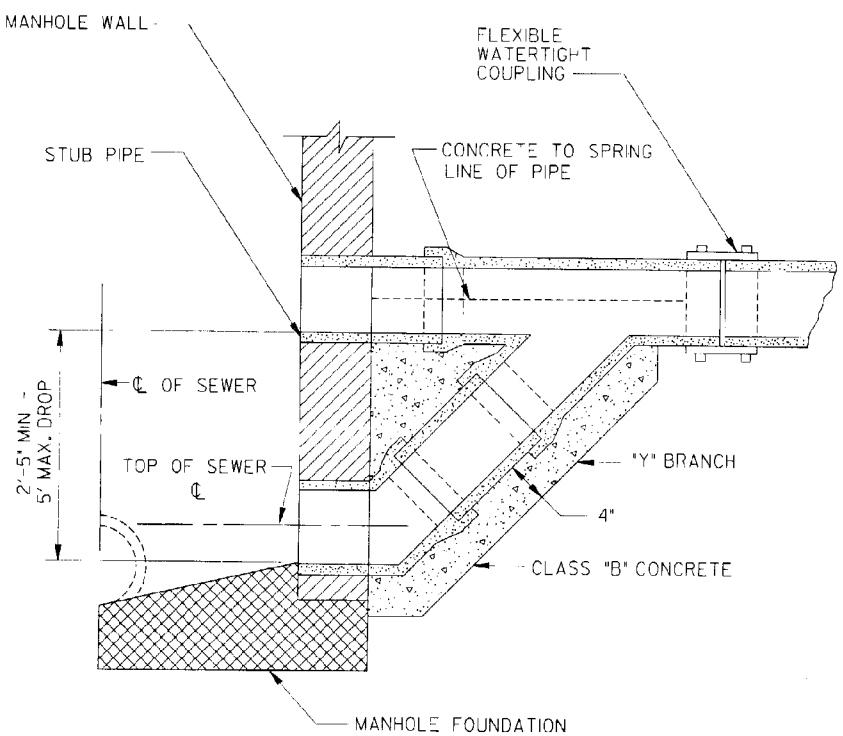

TYPE A

2.5' TO 5' DROP

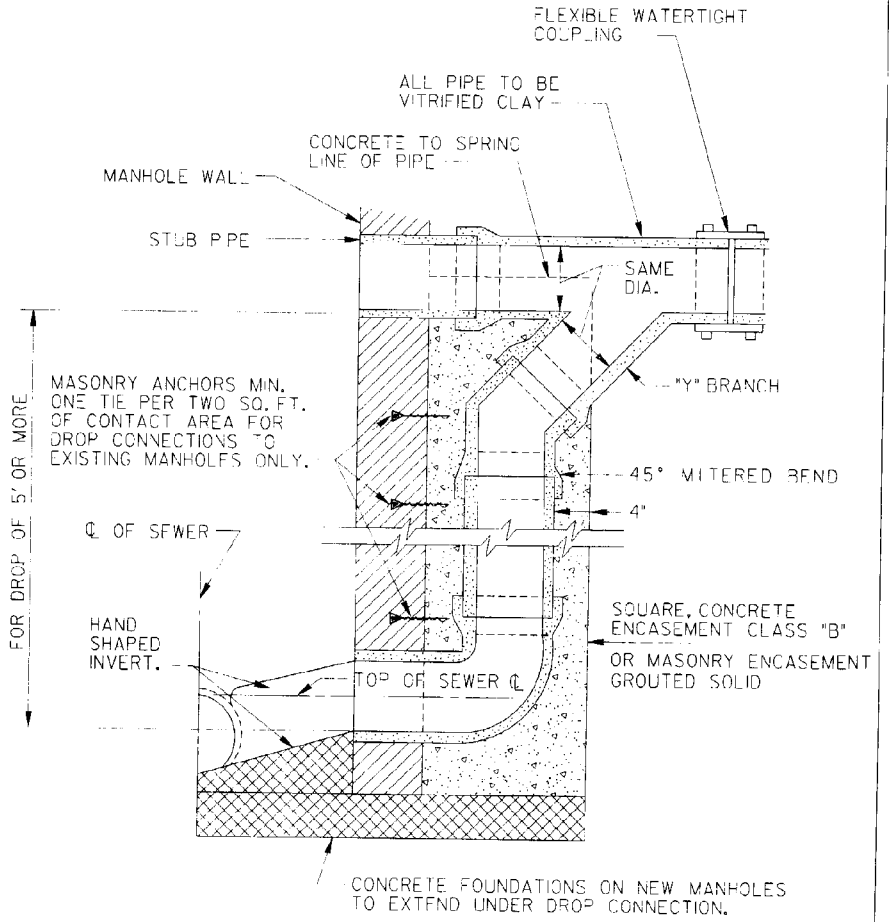

TYPE B

5' OR MORE

DESIGN APPROVED George R. Hale APPROVED FOR DISTRIBUTION	STATE OF ARIZONA DEPARTMENT OF TRANSPORTATION DIVISION OF HIGHWAYS STANDARD DRAWINGS	10/89
	DROP SEWER CONNECTIONS	DRAWING NO. C 22.35

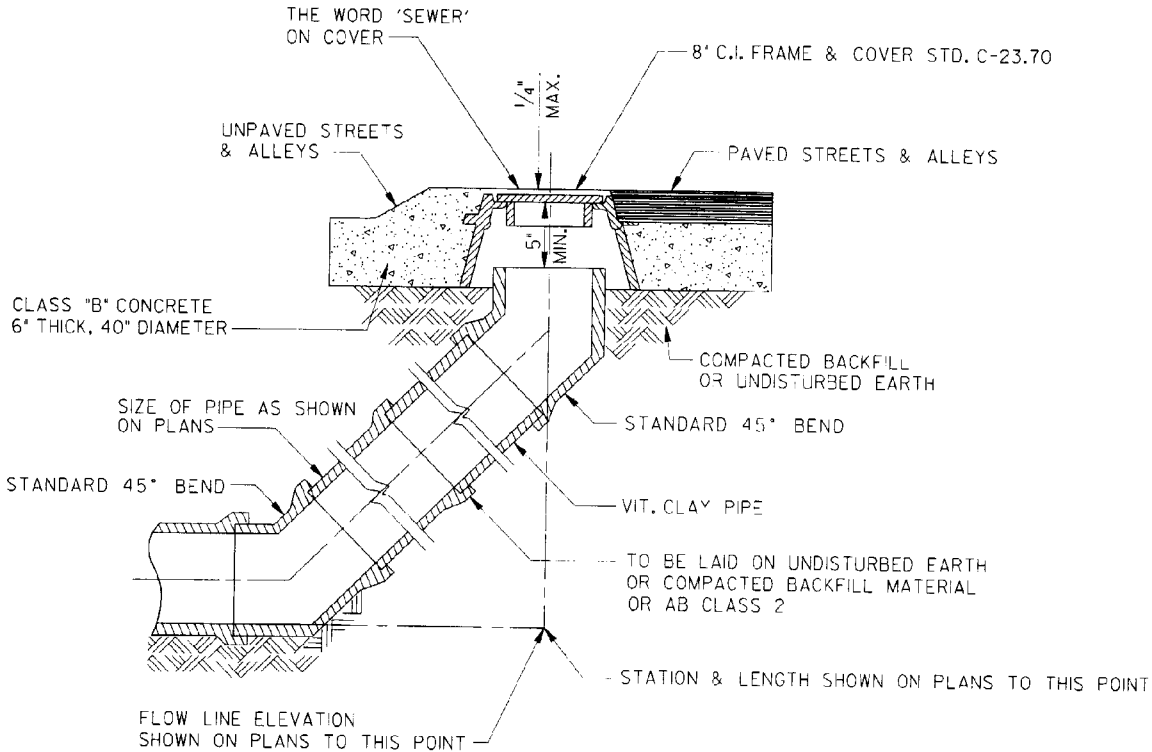

CLEANOUT INSTALLATION

DESIGN APPROVED *George R. Hale*	STATE OF ARIZONA DEPARTMENT OF TRANSPORTATION DIVISION OF HIGHWAYS STANDARD DRAWINGS	10/89
APPROVED FOR DISTRIBUTION	SEWER CLEANOUT	DRAWING NO. C-22.40

TYPICAL LOCATIONS OF THRUST BLOCKS

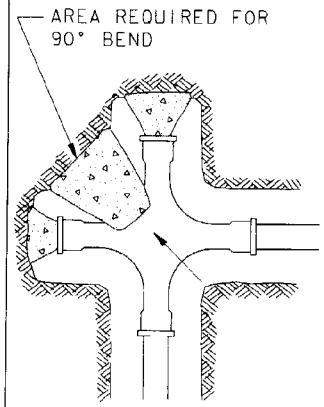

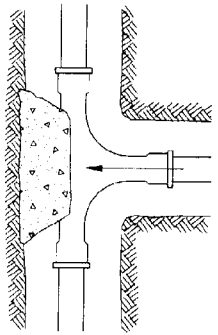

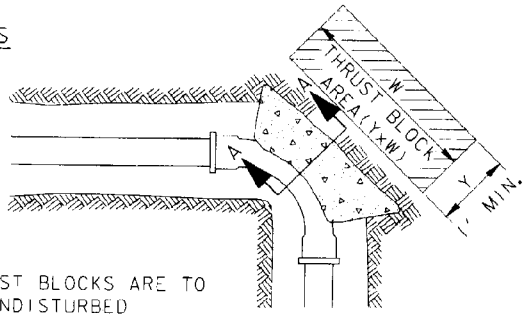

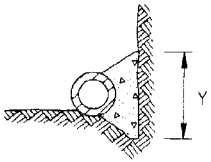

SECTION A-A

NOTE: THRUST BLOCKS ARE TO EXTEND TO UNDISTURBED GROUND. CONCRETE TO BE CLASS 'B'

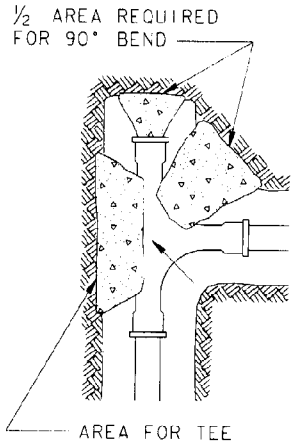

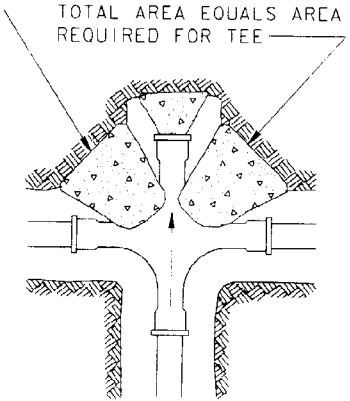

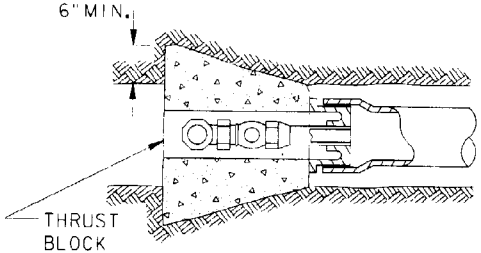

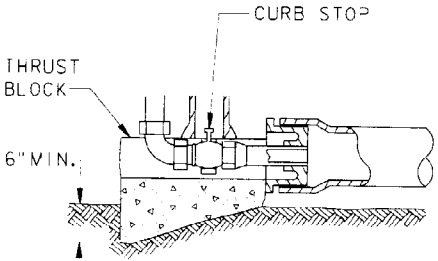

MINIMUM THRUST BLOCK AREA REQUIRED (Y x W)		
PIPE SIZE	WATER PIPE	
	TEE, DEAD END, 90° BEND	45° & 22½° BENDS
4" & LESS	3 SQ. FEET	3 SQ. FEET
6"	4 " "	3 " "
8"	6 " "	3 " "
10"	9 " "	5 " "
12"	13 " "	7 " "
16"	23 " "	12 " "

NOTES:

1. TABLE IS BASED ON 3000#/SQ.FT. SOIL. IF CONDITIONS ARE FOUND TO INDICATE SOIL BEARING IS LESS, THE AREAS SHALL BE INCREASED ACCORDINGLY.
2. AREAS FOR PIPE LARGER THAN 16" SHALL BE CALCULATED FOR EACH PROJECT.
3. FORM ALL NON-BEARING VERTICAL SURFACES.

DESIGN APPROVED George R Hale APPROVED FOR DISTRIBUTION	STATE OF ARIZONA DEPARTMENT OF TRANSPORTATION DIVISION OF HIGHWAYS STANDARD DRAWINGS	10/89
	THRUST BLOCKS FOR WATER LINES	DRAWING NO. C 23.10

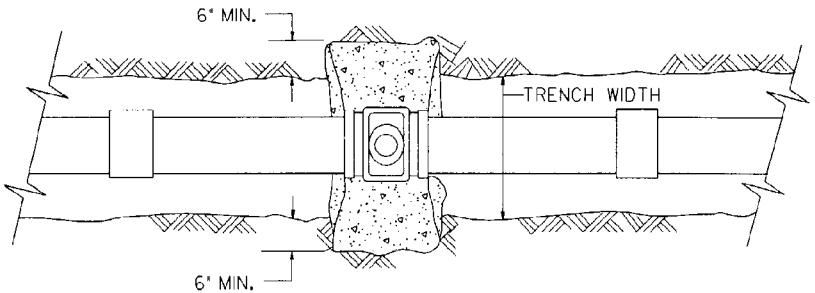

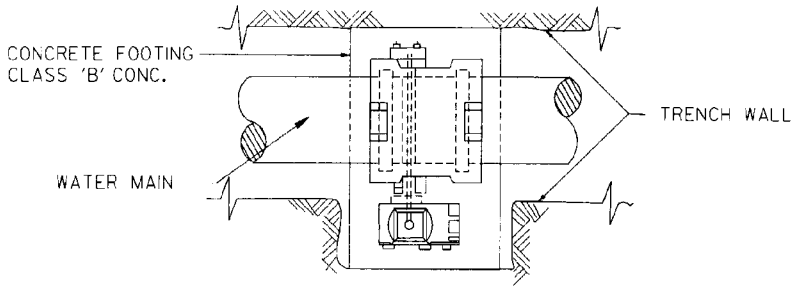

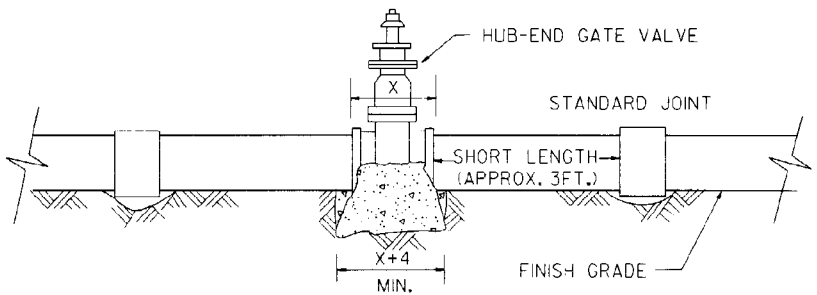

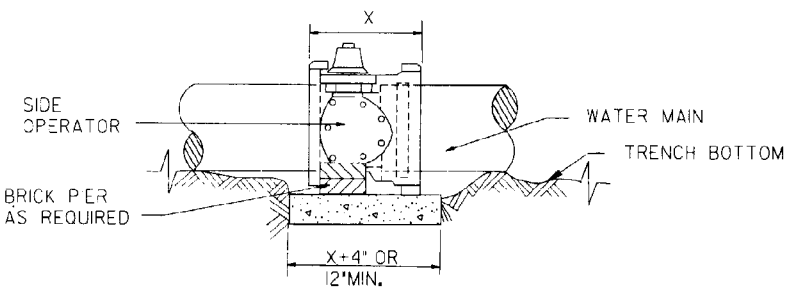

CLASS 'B' CONCRETE
FORM AS REQUIRED TO KEEP CLEAR OF JOINTS.

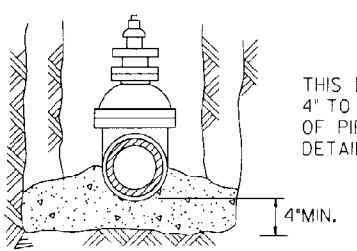

NOTE

THIS DETAIL COVERS WATER GATE VALVES, 4" TO 16" INCLUSIVE, REGARDLESS OF TYPE OF PIPE USED. LARGER LINES TO BE DETAILED ON PLANS.

GATE VALVE

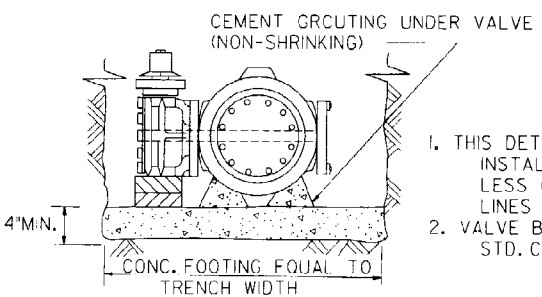

BUTTERFLY VALVE

NOTES

1. THIS DETAIL COVERS BUTTERFLY VALVE INSTALLATION, 3" TO 12" INCLUSIVE, REGARDLESS OF TYPE OF PIPE OR JOINT USED. LARGER LINES TO BE DETAILED ON PLANS.
2. VALVE BOX AND COVER REQUIRED PER STD. C-23.30

DESIGN APPROVED George R. Hale	STATE OF ARIZONA DEPARTMENT OF TRANSPORTATION DIVISION OF HIGHWAYS STANDARD DRAWINGS	10/89
APPROVED FOR DISTRIBUTION	BLOCKING FOR WATER VALVES GATE AND BUTTERFLY	DRAWING NO. C-23.15

NOTE

BARS TO CONCRETE THRUST BLOCK TO BE COATED WITH 2 COATS COAL TAR, EPOXY OR BY OTHER APPROVED METHOD. BARS TO HAVE 90° HOOK ON LOWER END, AS PER TABLE.

PIPE SIZE	MIN. BAR SIZE	"A"-DIMENSION (HOOK)	MIN. * BLOCK DIM.
6"	#6	6"	3'x 3'x 3'
8"	#6	9"	4'x 4'x 2.5'
12"	#8	9"	4'x 5'x 5'

* FOR 125 psi WORKING PRESSURE

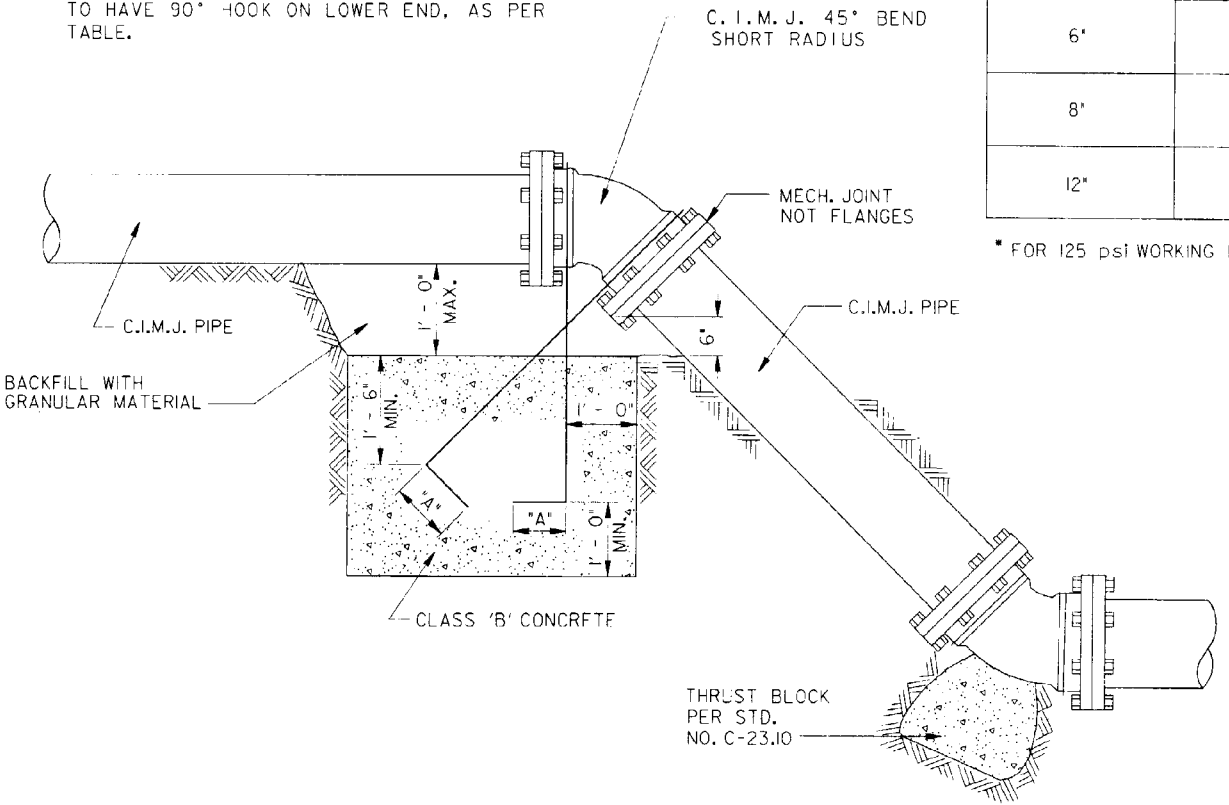

NOTES

1. EITHER THIS DETAIL OR RESTRAINT RODS CAN BE USED WHEN IT IS ALLOWED TO RELOCATE A WATER LINE UPWARD TO CROSS OVER A CONFLICT.
2. DUCTILE IRON PIPE MAY BE USED.
3. THRUST BLOCKS FOR PIPE LARGER THAN 12" SHALL BE CALCULATED FOR EACH PROJECT.

DESIGN APPROVED George R. Hale	STATE OF ARIZONA DEPARTMENT OF TRANSPORTATION DIVISION OF HIGHWAYS STANDARD DRAWINGS	10/89
APPROVED FOR DISTRIBUTION	ANCHOR BLOCK FOR VERTICAL BENDS	DRAWING NO. C-23.20

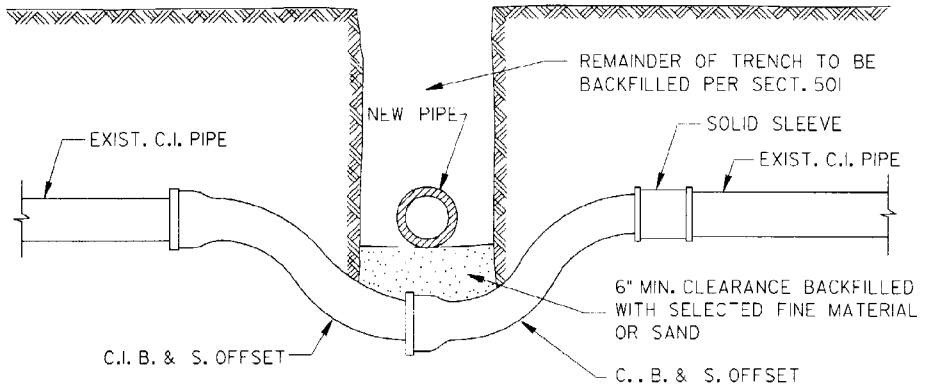

45° CAST IRON BENDS MAY BE USED IN PLACE OF CAST IRON OFFSETS, AS SHOWN

CAST IRON

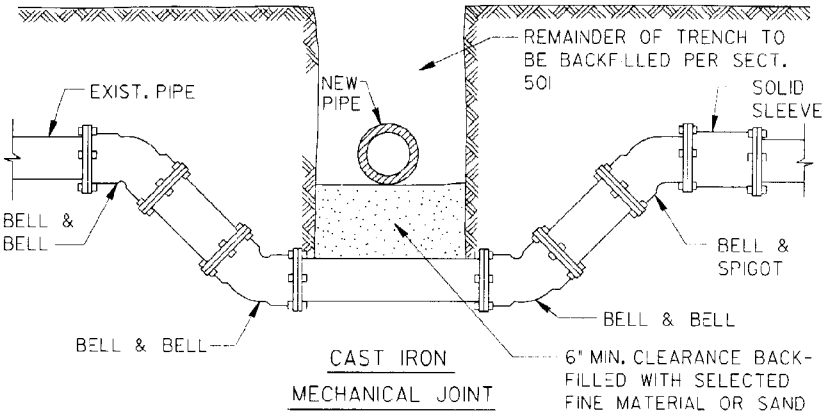

CAST IRON

MECHANICAL JOINT

DROP SECTION IS TO BE PREFABRICATED AND INSTALLED AS A SINGLE UNIT

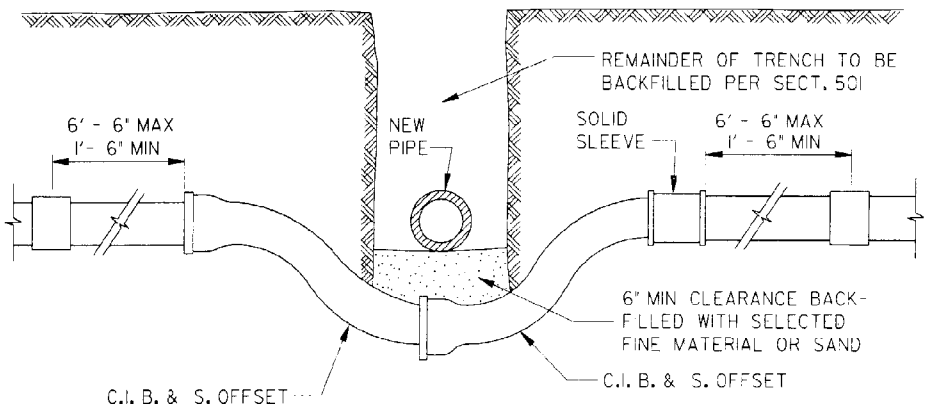

ASBESTOS CEMENT

NOTES

1. THIS DETAIL COVERS MOVING OF WATER MAINS, 2" TO 12" ONLY.
2. THRUST BLOCKING PER STD. NO. C-23.10 AND C-23.20.
3. IF OFFSET IS TO GO OVER OBSTRUCTION, JOINT RESTRAINTS MUST BE USED.
4. PIPE IS TO BE CAST IRON OR DUCTILE IRON.

DESIGN APPROVED *George R. Hole*	STATE OF ARIZONA DEPARTMENT OF TRANSPORTATION DIVISION OF HIGHWAYS STANDARD DRAWINGS	10/89
APPROVED FOR DISTRIBUTION	VERTICAL REALIGNMENT OF WATER MAINS	DRAWING NO. C-23.25

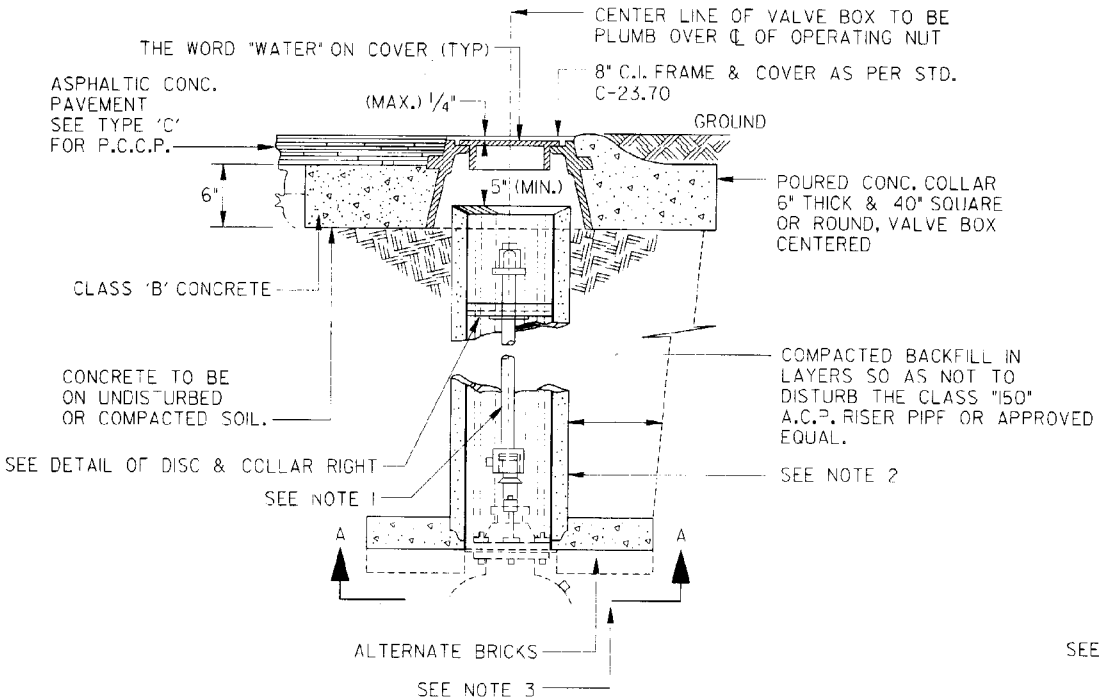

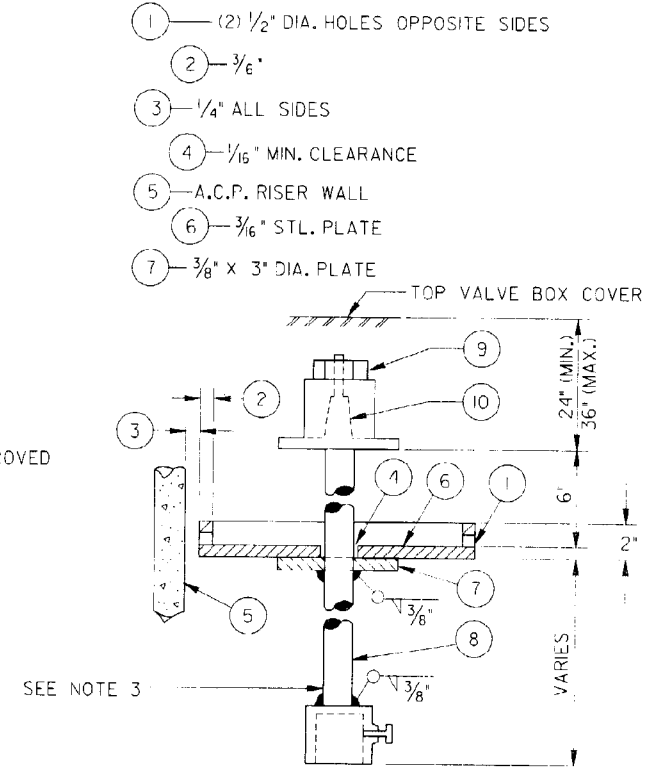

8 — MIN. ROD SIZE 1 1/4" DIA. STL. DESIG. A-15

9 — 2" SQUARE OPER. NUT TO BE HELD DOWN WITH NUT ON THREADED SHAFT AS STD. VALVE STEM NUT ATTACHMENT.

10 THIS PART OF STEM SQUARE WITH 4 SIDES TAPERED.

NOTES

1. EXTENSION STEM: WITH SQUARE SOCKET ON BOTTOM TO FIT 2" SQUARE VALVE NUT. EXTENSION TO VALVE STEMS REQUIRED ON ALL VALVES INSTALLED WHERE OPERATING NUT IS OVER 5' BELOW SURFACE. LENGTH TO FIT EACH INSTALLATION. OPERATING NUT TO BE HELD ON TOP OF EXTENSION WITH STOP NUT.
2. IF TWO OR MORE JOINTS OF A.C.P. ARE USED TO MAKE RISER USE STANDARD A.C. PIPE RUBBER GASKET COUPLING TO JOIN PIPE. WHERE RISER LENGTH EXCEEDS 10' USE 12' A.C. PIPE.
3. STEM PAINTING: ALL STEEL TO HAVE PRIME COAT OF PAINT NO. 4 AND ONE HEAVY APPLICATION (FINISH COAT) OF PAINT NO.1002-4.06 AS PER SECT.1002.

DESIGN APPROVED *George R. Hale*	STATE OF ARIZONA DEPARTMENT OF TRANSPORTATION DIVISION OF HIGHWAYS STANDARD DRAWINGS	10/89
APPROVED FOR DISTRIBUTION	VALVE BOX INSTALLATION	DRAWING NO. C-23.30 Sheet 1 of 3

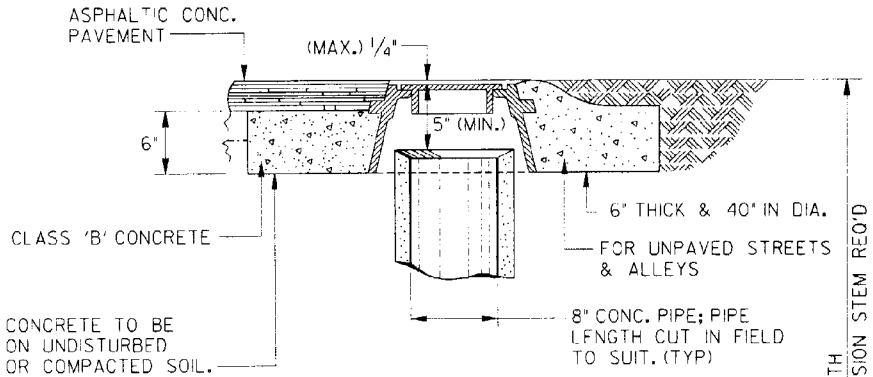

TYPE "A-1"

(TO BE USED IN AREAS SUBJECT TO VEHICULAR TRAFFIC.)

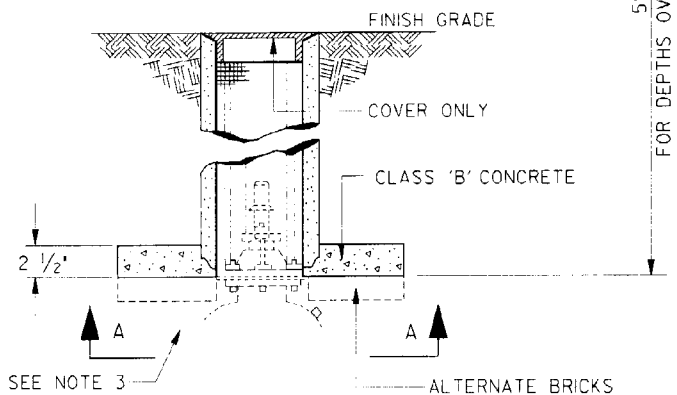

TYPE 'B'

(NOT SUBJECT TO VEHICULAR TRAFFIC)

NOTES

4. VALVE BOX SHALL BE ADJUSTED TO THE FINISHED GRADE PRIOR TO PLACING OF THE ASPHALTIC CONCRETE SURFACE OR P.C.C.P.

5. GROUND BELOW CONCRETE PAD OR 3 BRICKS TO BE COMPACTED 95% OF MAX. DENSITY.

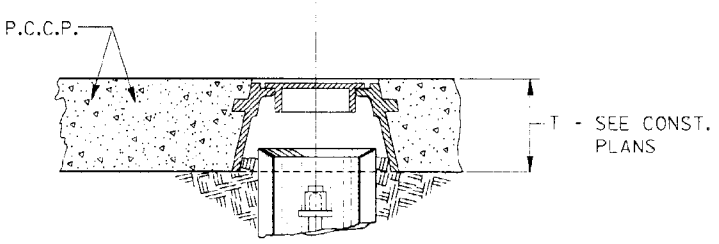

TYPE 'A-2' (TO BE USED WHEN VALVE BOX IS LOCATED WITHIN P.C.C.P. PAVEMENT)

DESIGN APPROVED: George R. Hale APPROVED FOR DISTRIBUTION: [illegible]	STATE OF ARIZONA DEPARTMENT OF TRANSPORTATION DIVISION OF HIGHWAYS STANDARD DRAWINGS	10/89
	VALVE BOX INSTALLATION	DRAWING NO. C-23.30 Sheet 2 of 3

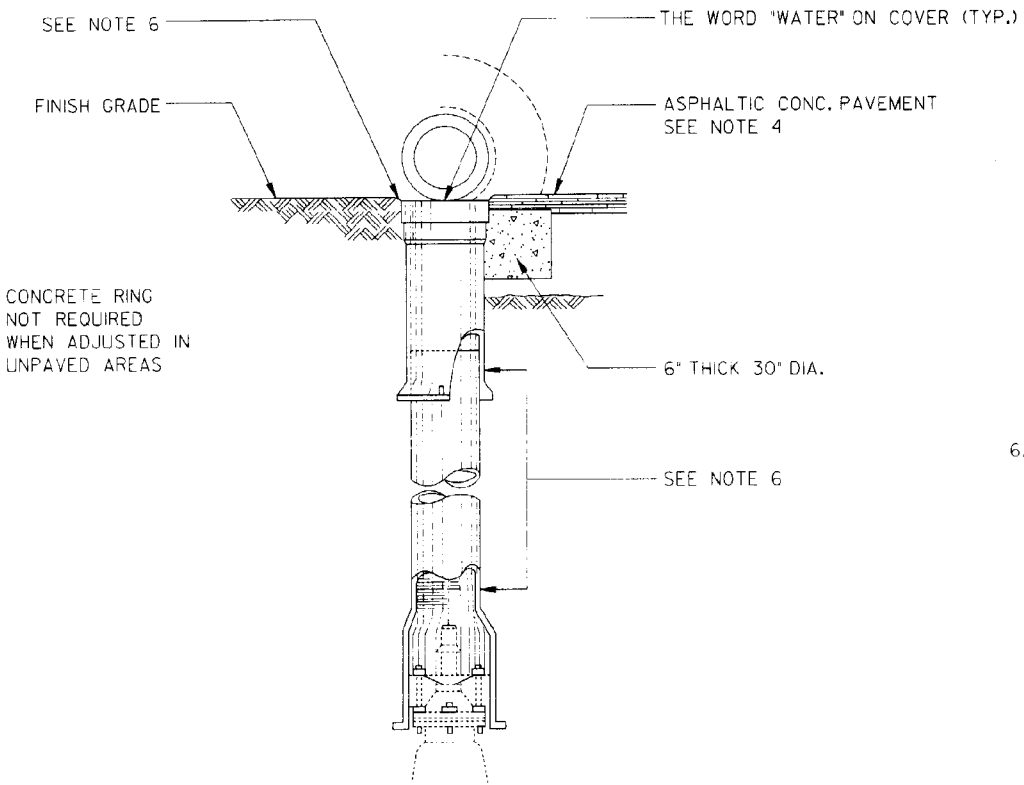

ELEVATION

NOTES

6. USE PARKSON, TYLER, APCO, OR EQUAL DEEP SKIRTED LID (4" OR MORE) TYPE, SLIDING ADJUSTABLE CAST IRON VALVE BOX. C.I. MIN. T.S. 30,000 P.S.I.

DESIGN APPROVED George R. Hale	STATE OF ARIZONA DEPARTMENT OF TRANSPORTATION DIVISION OF HIGHWAYS STANDARD DRAWINGS	10/89
APPROVED FOR DISTRIBUTION	VALVE BOX INSTALLATION	DRAWING NO. C-23.30 Sheet 3 of 3

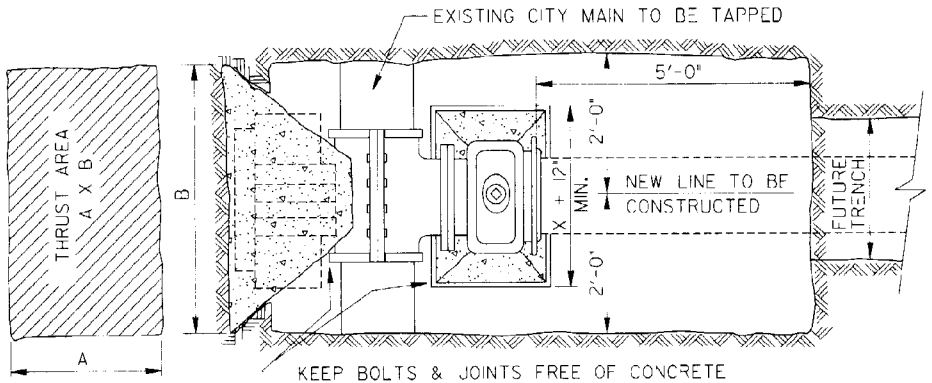

PLAN

CONCRETE: CLASS 'B' CONCRETE NORMALLY, CURE 24 HRS. BEFORE BACKFILLING OR USE HIGH EARLY STRENGTH CONCRETE.

OPTIONAL BLOCKING 2" X 8" X 12" SOLID CONCRETE MASONRY UNITS AS INDICATED.

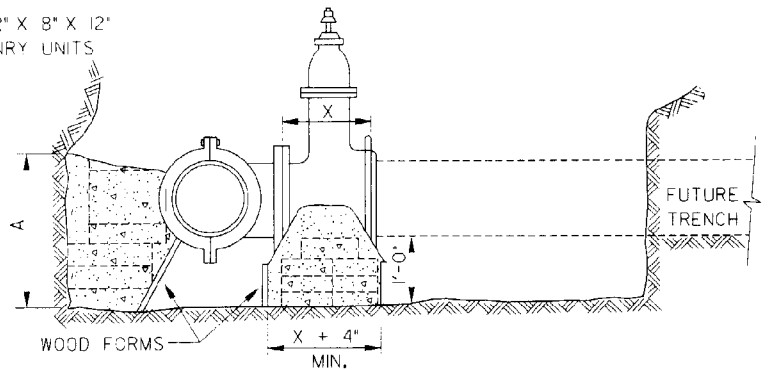

ELEVATION

NOTES

1. BLOCKS ARE TO EXTEND TO UNDISTURBED GROUND.
2. ALL TAPS SHALL BE MADE BY CITY CREWS AT PREVAILING RATES.
3. INSTALL PERMANENT BLOCKING UNDER VALVE BEFORE TAP IS MADE. ALL FLANGE BOLTS SHALL BE CLEAR OF FOOTING.
4. ALL TAPPING SLEEVES MUST BE PRESSURE TESTED PRIOR TO REQUESTS FOR TAP BY CITY.
5. CONTRACTOR SHALL EXCAVATE AS SHOWN AND SHALL SET TAPPING SLEEVE AND VALVE AND TIGHTEN ALL BOLTS PRIOR TO REQUESTING CITY TO MAKE TAP.
6. TAPPING SLEEVE TO BE PLACED A MINIMUM OF 18" FROM ANY BELL, COUPLING, VALVE, OR OTHER OBSTRUCTION.
7. AREAS FOR PIPE LARGER THAN 16" SHALL BE CALCULATED FOR EACH PROJECT.

SIZE OF PIPE BEING CONNECTED	MINIMUM THRUST AREA REQUIRED EQUALS (A X B)
4" & LESS	3 SQUARE FEET
6"	4 SQUARE FEET
8"	6 SQUARE FEET
10'	9 SQUARE FEET
12"	13 SQUARE FEET
16'	23 SQUARE FEET

DESIGN APPROVED George R. Hale APPROVED FOR DISTRIBUTION	STATE OF ARIZONA DEPARTMENT OF TRANSPORTATION DIVISION OF HIGHWAYS STANDARD DRAWINGS	10/89
	TAPPING SLEEVE AND VALVE INSTALLATION	DRAWING NO. C-23.35

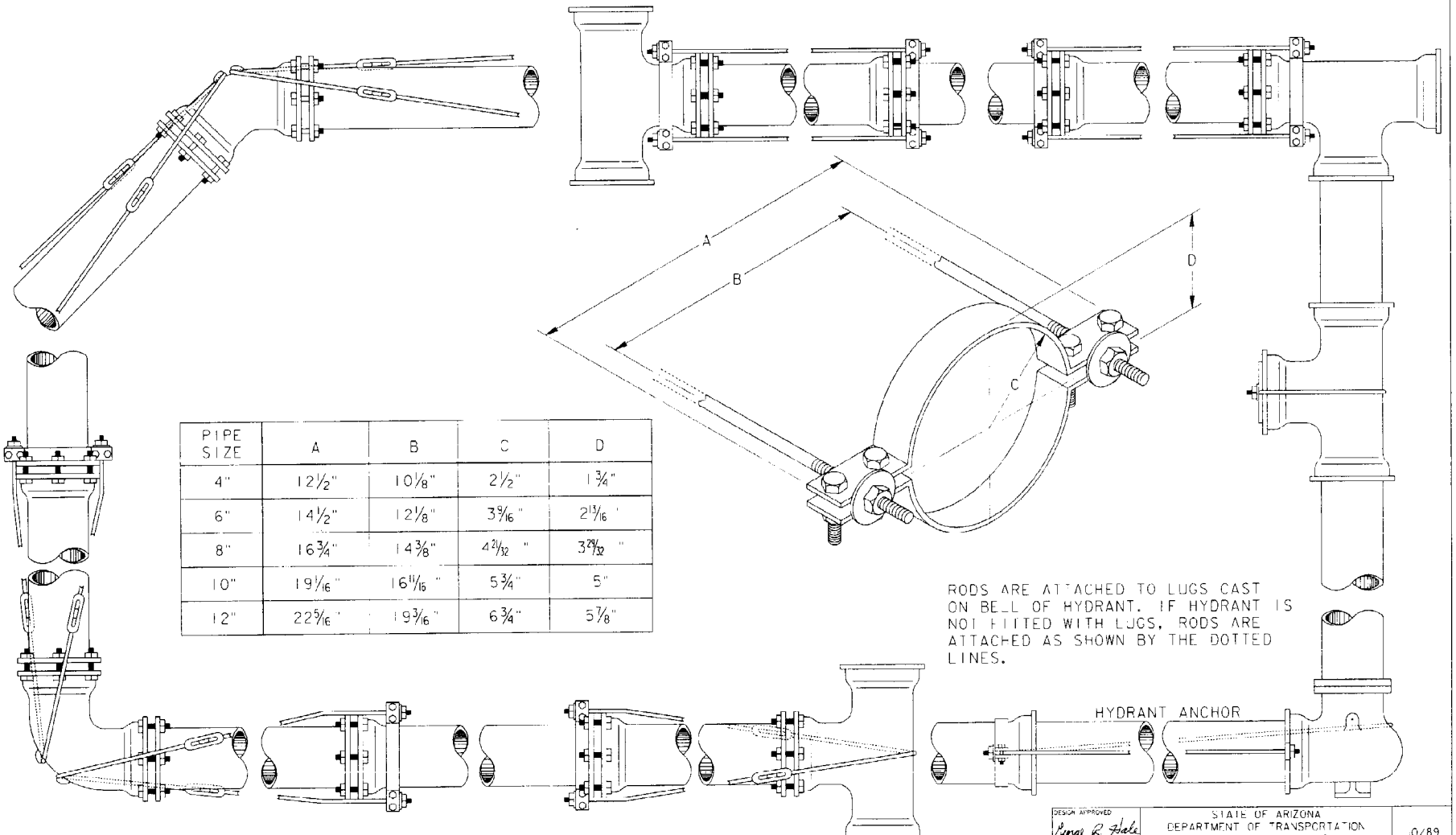

PIPE SIZE	A	B	C	D
4"	12 1/2"	10 1/8"	2 1/2"	1 3/4"
6"	14 1/2"	12 1/8"	3 9/16"	2 13/16"
8"	16 3/4"	14 3/8"	4 21/32"	3 29/32"
10"	19 1/16"	16 11/16"	5 3/4"	5"
12"	22 5/16"	19 3/16"	6 3/4"	5 7/8"

RODS ARE ATTACHED TO LUGS CAST ON BELL OF HYDRANT. IF HYDRANT IS NOT FITTED WITH LUGS, RODS ARE ATTACHED AS SHOWN BY THE DOTTED LINES.

DESIGN APPROVED
George R. Hale

APPROVED FOR DISTRIBUTION

STATE OF ARIZONA
DEPARTMENT OF TRANSPORTATION
DIVISION OF HIGHWAYS
STANDARD DRAWINGS

10/89

JOINT RESTRAINT
WITH TIE RODS

DRAWING NO.
C-23.40
Sheet 1 of 2

THIS DETAIL IS FOR USE ONLY ON UNDERGROUND INSTALLATIONS WHERE THE USE OF CONCRETE THRUST BLOCKING PER STD. NO. C-23.10 CANNOT BE USED BECAUSE OF OBSTRUCTIONS, OR REQUIREMENTS OF THE SPECIFICATIONS...

CLAMPS SHALL BE 1/2 BY 2 INCHES FOR PIPE 4 AND 6 INCHES IN DIAMETER; 5/8 BY 2 1/2 INCHES FOR PIPE 8 AND 10 INCHES; 5/8 BY 3 INCHES FOR PIPE 12 INCHES. BOLT HOLES SHALL BE 1/16 INCH IN DIAMETER LARGER THAN BOLTS.

RODS SHALL BE 3/4 INCHES IN DIAMETER FOR PIPES 4, 6 AND 8 INCHES IN DIAMETER; 7/8 INCHES FOR PIPE 10 INCHES AND 1 INCH IN DIAMETER FOR PIPE 12 INCHES.

BOLTS SHALL BE 5/8 INCHES IN DIAMETER FOR PIPE 4, 6, AND 8 INCHES IN DIAMETER; 3/4 INCHES FOR PIPE 10 INCHES AND 7/8 INCHES IN DIAMETER FOR PIPE 12 INCHES.

WASHERS MAY BE CAST IRON OR STEEL, ROUND OR SQUARE. DIMENSIONS FOR CAST IRON WASHERS ARE 5/8 BY 3 INCHES FOR PIPE 4, 6, 8 AND 10 INCHES IN DIAMETER AND 3/4 BY 3 1/2 INCHES FOR PIPE 12 INCHES. DIMENSIONS FOR STEEL WASHERS ARE 1/2 BY 3 INCHES FOR PIPE 4, 6, 8 AND 10 INCHES IN DIAMETER AND 1/2 BY 3 1/2 INCHES FOR PIPE 12" IN DIA., HOLES SHALL BE 1/8 INCH LARGER THAN THE RODS.

FOR PIPE LARGER THAN 12" IN DIA., RESTRAINT DETAILS SHALL BE SUBMITTED FOR APPROVAL PRIOR TO INSTALLATION.

1. ALL TIE RODS, ROD COUPLINGS, TURNBUCKLES, BOLTS AND NUTS FOR THESE JOINTS SHALL BE OF CARBON STEEL EQUIVALENT TO A.S.T.M. A-307, GRADE B, WITH CADMIUM PLATING IN ACCORDANCE WITH A.S.T.M. A-165, EXCEPT THAT THE MIN. THICKNESS OF THE PLATING SHALL BE .0002 OF AN INCH. CADMIUM PLATED BOLTS SHALL HAVE CLASS 2A THREADS AND THE NUTS, ROD COUPLINGS AND TURNBUCKLES SHALL HAVE 2B THREADS.
2. HIGH STRENGTH, HEAT TREATED CAST IRON TEE-HEAD BOLTS WITH HEXAGON NUTS, ALL IN ACCORDANCE WITH THE STRENGTH REQUIREMENTS OF A.W.W. A C-111, MAY BE USED IN LIEU OF THE CADMIUM PLATED BOLTS AND NUTS.
3. THE SKETCHES IN THIS SERIES OF FIGURES SHOW ACCEPTABLE METHODS OF PROVIDING ANCHORAGE. THERE IS NO PARTICULAR SIGNIFICANCE TO BE ATTACHED TO WHETHER THE SKETCH SHOWS A BELL AND SPIGOT JOINT OR A STANDARD MECHANICAL JOINT. THE ANCHORING PROCEDURE ILLUSTRATED APPLIES IN MOST CASES TO EITHER TYPE OF JOINT. IN SOME CASES, DIMENSIONS OF THE PARTICULAR PIPE OR HUB AND SPACE AVAILABLE FOR WORKING AROUND THE PARTICULAR JOINT WILL INFLUENCE THE CHOICE OF METHODS USED.
4. IN CERTAIN ASSEMBLIES OF RODS AND CLAMPS SHOWN, RODS RUN FROM A LUG ON THE FITTING (OR A CLAMP BEHIND THE HUB OF A BELL) TO A CLAMP AGAINST A FACE OF A BELL. NOTE THAT THIS ARRANGEMENT ANCHORS ONLY ONE JOINT. THE STABILITY OF THE JOINT WHERE THE CLAMP IS AGAINST THE FACE OF THE BELL DEPENDS ON HAVING SOIL ABOVE A RELATIVELY LONG PIECE OF PIPE ON BOTH SIDES OF THE JOINT. CONSEQUENTLY, IF THE DISTANCE BETWEEN THE FIRST AND SECOND JOINTS IS LESS THAN 12 FEET, THE SECOND JOINT SHOWN SHALL BE ANCHORED BY A CLAMP BEHIND THE HUB OF THE BELL AND RODS TO A CLAMP AT THE FACE OF THE NEXT BELL.
5. COATING TYPE: ASPHALTIC PRIMER PER SUBSECTION 907-2.02, - ALL EXPOSED METAL.

DESIGN APPROVED: George R. Hale	STATE OF ARIZONA DEPARTMENT OF TRANSPORTATION DIVISION OF HIGHWAYS STANDARD DRAWINGS	10/89
APPROVED FOR DISTRIBUTION: [signature]	JOINT RESTRAINT WITH TIE RODS	DRAWING NO. C-23.40 Sheet 2 of 2

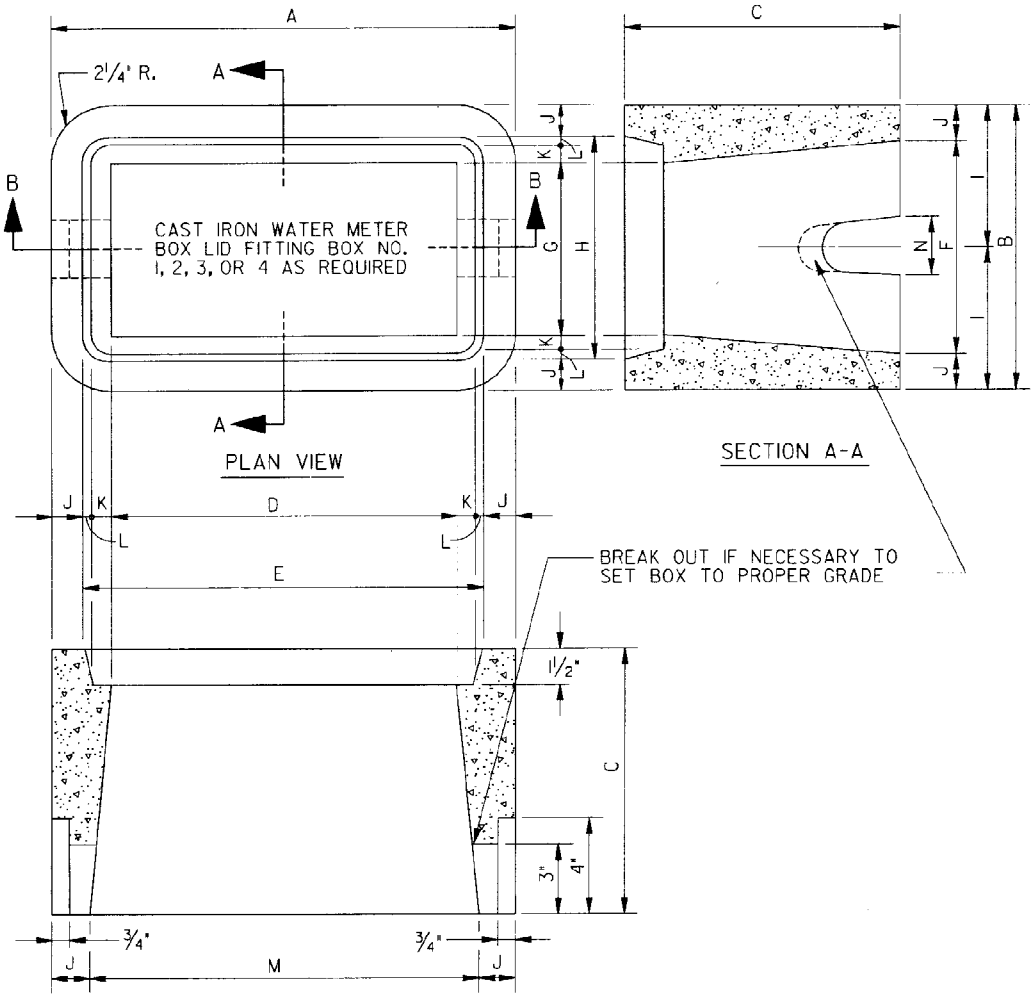

METER BOX DIMENSIONS				
DIM.	BOX NUMBER			
	1	2	3	4
A	19"	24 1/2"	29 1/2"	33 1/2"
B	12"	16 3/4"	18 1/2"	22 3/4"
C	11"	12"	13"	12"
D	14"	19"	23 3/4"	27 3/4"
E	16"	22"	26 1/2"	30 1/2"
F	9"	13 1/4"	15"	19 3/4"
G	7"	11 1/4"	12 3/4"	17"
H	9"	14 1/4"	15 1/2"	19 3/4"
I	6"	8 3/8"	9 1/4"	11 3/8"
J	1 1/2"	1 3/4"	1 3/4"	1 1/2"
K	3/4"	1 1/8"	1"	1"
L	1/4"	3/8"	3/8"	3/8"
M	16"	21"	25 1/2"	30 1/2"
N	2 1/2"	3 1/2"	4"	4"
	5/8" OR 3/4" METER	1" METER	1 1/2" METER	2" METER

NOTES

1. THE METER BOXES SHALL CONFORM TO THE DIMENSIONS AS SHOWN AND SHALL BE MADE OF PORTLAND CEMENT CONCRETE POURED AND TAMPED (OR VIBRATED) IN TRUE FORMS.
2. USE CLASS 'S' CONCRETE, f'c=4000 p.s.i.

DESIGN APPROVED George R. Hale	STATE OF ARIZONA DEPARTMENT OF TRANSPORTATION DIVISION OF HIGHWAYS STANDARD DRAWINGS	10/89
APPROVED FOR DISTRIBUTION	CONCRETE WATER METER BOX	DRAWING NO. C-23.45

NO SCALE

NOTE: ALL STEEL PER SPEC. 1004-1 & 1004-2

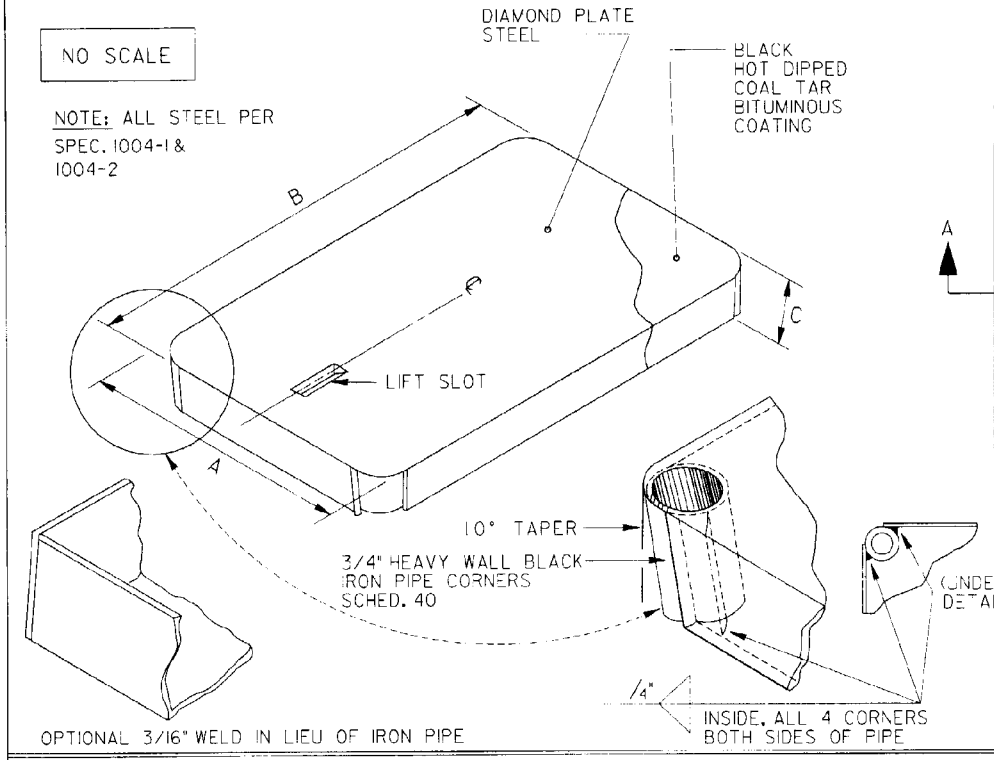

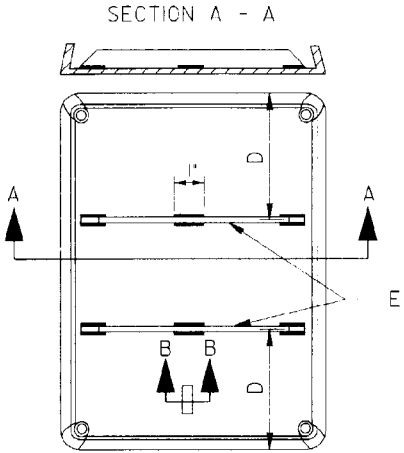

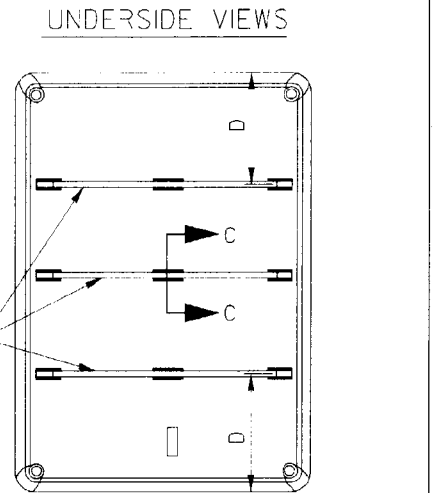

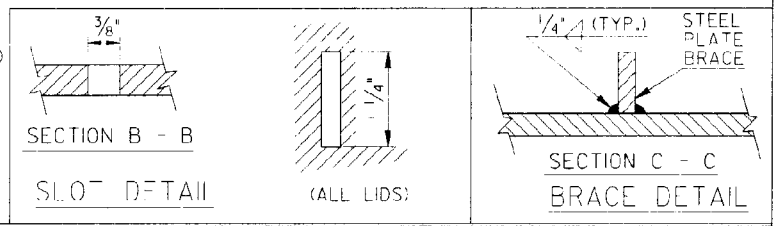

SPECIFICATIONS

NO.	A	B	C	D	E	BRACES	WEIGHT	MATERIAL
1	9"	15 7/8"	1 3/8"	NONE	NONE	NONE	5 1/4 LBS.	14 GAGE
2	14 1/8"	21 3/4"	1 1/2"	6 1/2"	3/16" X 1 1/4" X 13 1/8"	DETAIL 1	12 3/4 LBS.	12 GAGE
3	15 1/4"	26 1/4"	1 1/2"	8 1/4"	3/16" X 1 1/4" X 14 1/4"	DETAIL 1	19 1/4 LBS.	12 GAGE
4	19 1/2"	30"	1 1/2"	7 1/8"	3/16" X 1 1/4" X 18 3/4"	DETAIL 2	33 LBS.	11 GAGE

DESIGN APPROVED *George R. Hale*	STATE OF ARIZONA DEPARTMENT OF TRANSPORTATION DIVISION OF HIGHWAYS STANDARD DRAWINGS	10/89
APPROVED FOR DISTRIBUTION	STEEL COVER FOR WATER METER BOX	DRAWING NO. C-23.50

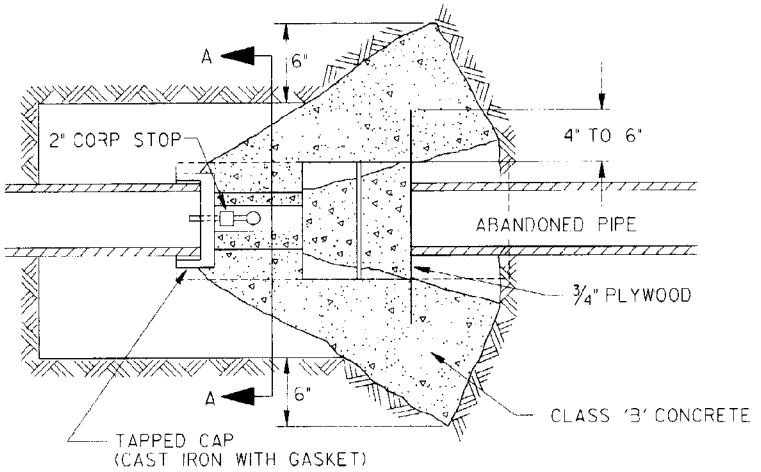

PLAN VIEW

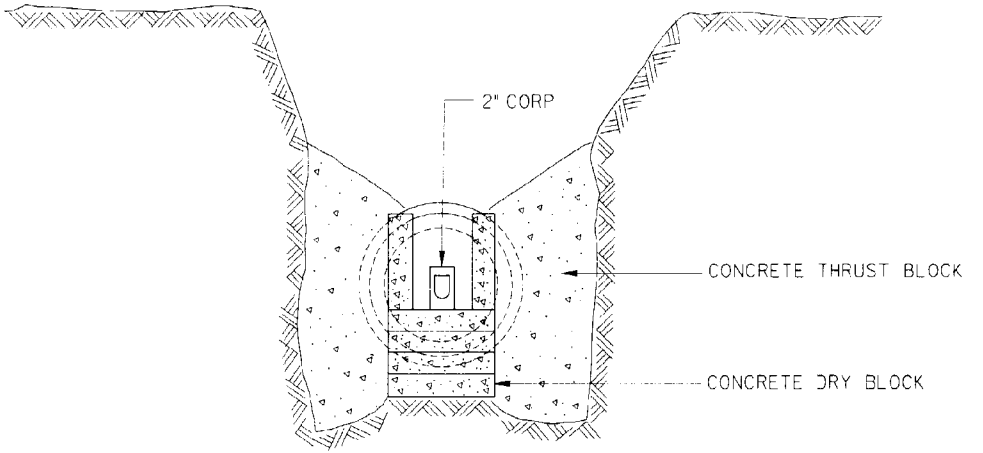

VIEW A - A

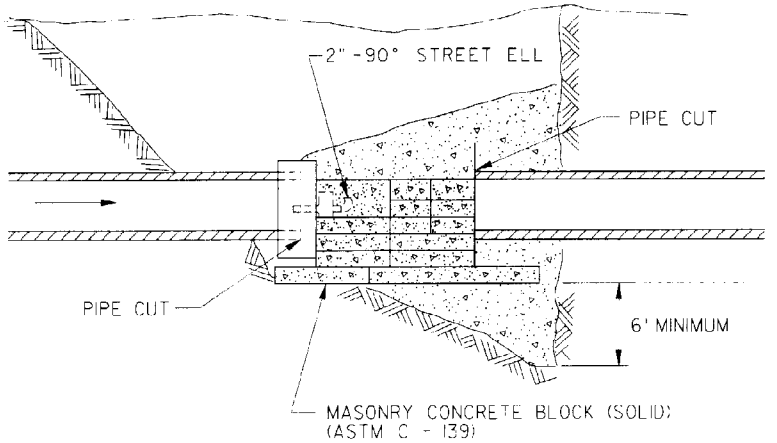

PROFILE VIEW

NOTES

1. CUT AND PLUGS MUST BE ADEQUATELY "DRY BLOCKED".
2. DRY BLOCKS SHALL BE STANDARD SIZE SOLID MASONRY CONCRETE BLOCKS. (ASTM C - 139).
3. THE QUANTITY AND ARRANGEMENT OF THE BLOCKING MUST WITHSTAND LINE PRESSURE BY HOLDING THE CAP OR PLUG IN POSITION.
4. DRY BLOCKS SHALL BE PROPERLY SHIMMED TIGHT AND SECURE AGAINST THE CAP BEFORE LINE PRESSURE IS RESTORED.
5. CONCRETE THRUST BLOCKS SHALL NOT BE POURED UNTIL LINE PRESSURE IS RESTORED AND THE CAP OR PLUG IS INSPECTED FOR LEAKAGE.
6. CONCRETE SHALL NOT BE POURED OVER ANY PORTION OF THE ABANDONED PIPE.
7. MINIMUM THRUST BLOCK AREA PER STD. C-23.10.
8. WHERE A 4" OR LARGER LINE IS SPECIFIED TO BE ABANDONED, THE CUT AND PLUG SHOULD OCCUR AT THE SUPPLY MAIN TO AVOID CREATING AN UNUSED DEADEND LINE.

DESIGN APPROVED George R. Hale	STATE OF ARIZONA DEPARTMENT OF TRANSPORTATION DIVISION OF HIGHWAYS STANDARD DRAWINGS	10/89
APPROVED FOR DISTRIBUTION	WATERLINE-CUT AND PLUG FOR 12" DIA. MAIN AND SMALLER	DRAWING NO. C-23.55

NOTES

1. ALL JOINTS IN HYDRANT RUN-OUT TO BE MECHANICAL JOINTS.
2. HYDRANT TEE: CLOW OR APPROVED EQUAL MAY BE USED IN PLACE OF TEE AND 90° BEND.
3. 90° BEND NOT REQUIRED IF SUFFICIENT ROOM FOR PERPENDICULAR INSTALLATION.
4. FOR CONCRETE THRUST BLOCKS SEE STD. DETAIL.
5. A FLANGE BY MECHANICAL JOINT SHUTOFF VALVE CONNECTING DIRECTLY TO THE TEE OR BELOW AT THE MAIN SHALL BE USED.
6. FIRE HYDRANT, FIRE HYDRANT THREADS, VALVE AND VALVE BOXES PER MUNICIPALITY REQUIREMENTS.

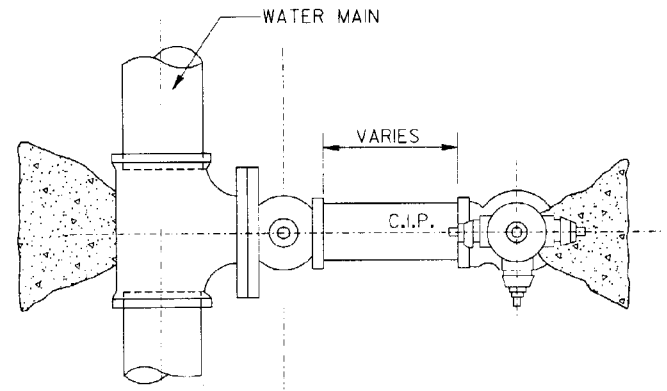

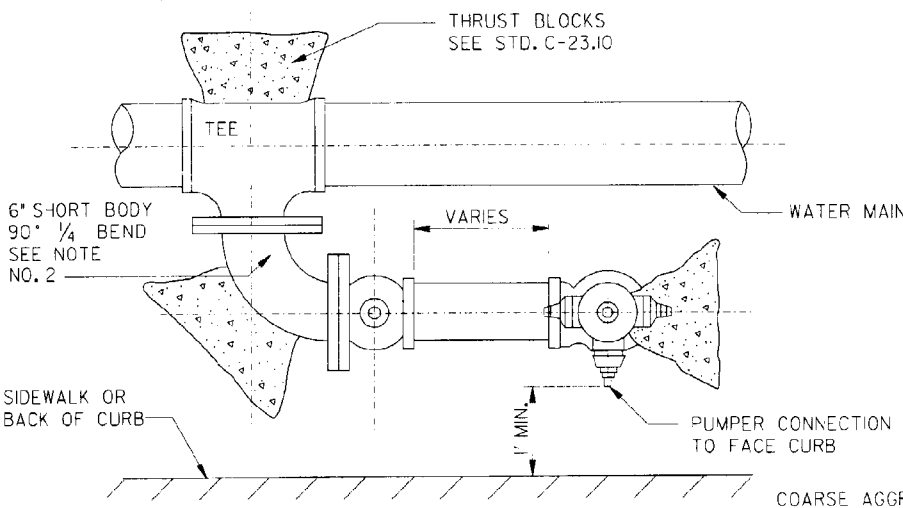

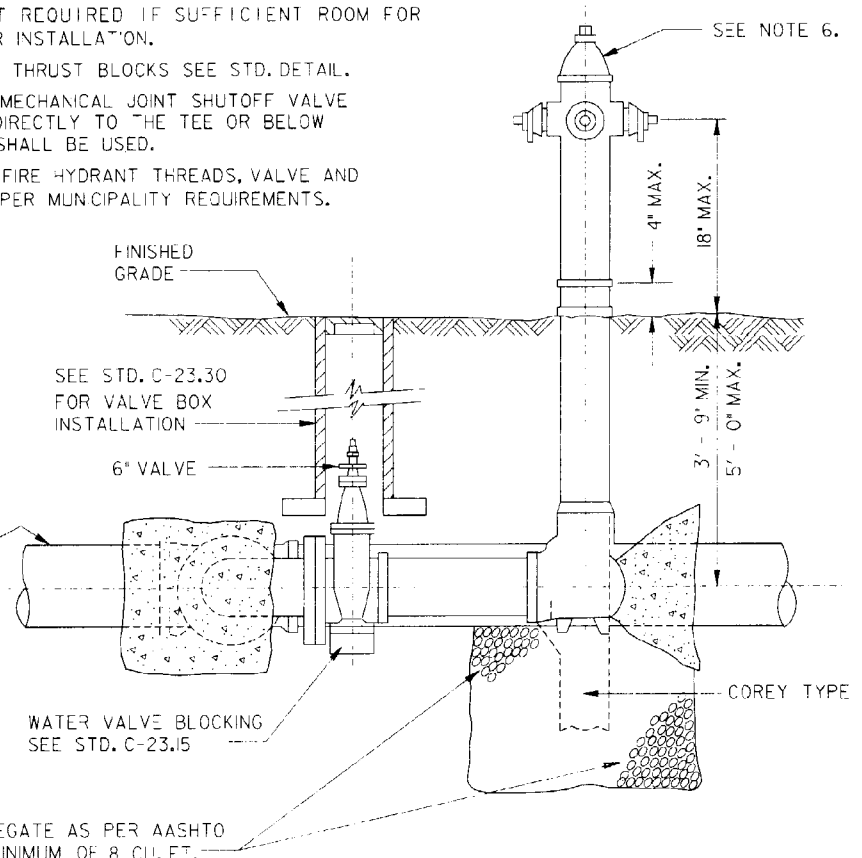

DESIGN APPROVED George R. Hale	STATE OF ARIZONA DEPARTMENT OF TRANSPORTATION DIVISION OF HIGHWAYS STANDARD DRAWINGS	10/89
APPROVED FOR DISTRIBUTION	HYDRANT INSTALLATION	DRAWING NO. C-23.60

NOTES

1. OBSTRUCTION SUCH AS UTILITY POLES, STREET SIGNS, IRRIGATION BOXES, FENCES, ETC., MUST NOT BE PLACED BETWEEN CURB AND HYDRANT.
2. * RADIUS VARIES BY MUNICIPALITY.
3. DIMENSIONS SHOWN ON PLANS SUPERSEDE LOCATIONS SHOWN HERE.
4. ON LOCATIONS IN MIDBLOCK, THE FIRE HYDRANT WILL BE ALIGNED WITH A PROPERTY LINE.

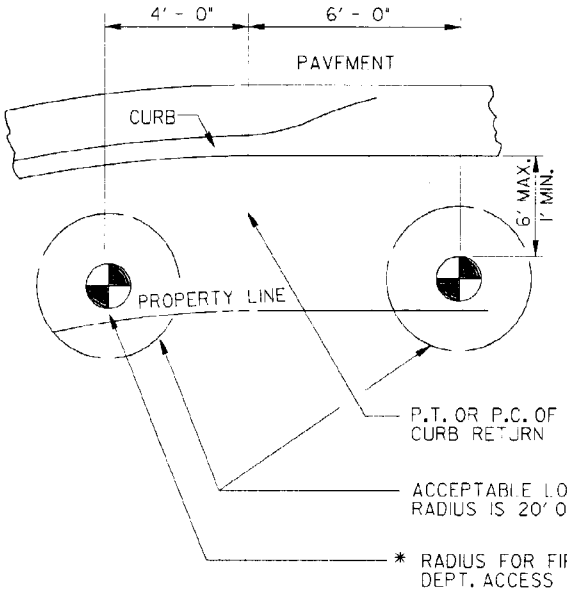

PARKWAY AREA OR NO SIDEWALK

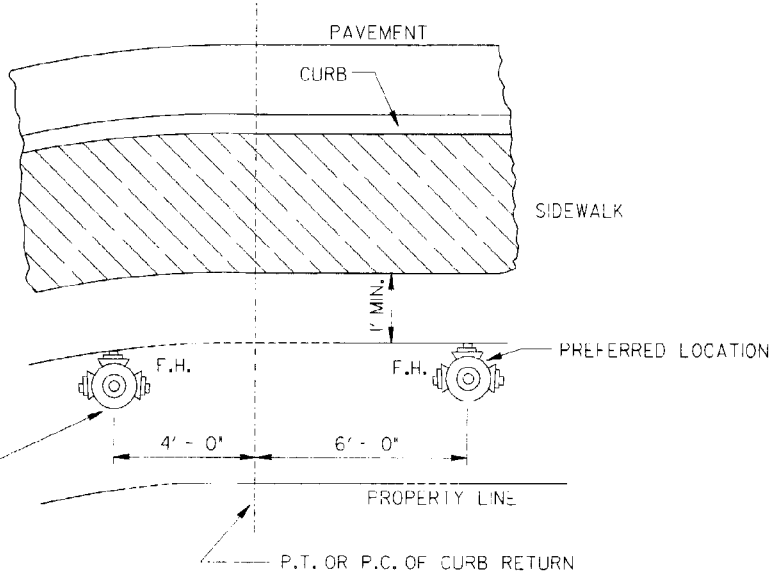

AREA WITH SIDEWALK

DESIGN APPROVED *George R. Hale*	STATE OF ARIZONA DEPARTMENT OF TRANSPORTATION DIVISION OF HIGHWAYS STANDARD DRAWINGS	10/89
APPROVED FOR DISTRIBUTION *Lynn A. Hart*	FIRE HYDRANT LOCATIONS	DRAWING NO. C 23.65