STATE OF ARIZONA

DEPARTMENT OF TRANSPORTATION

CONSTRUCTION

JUNE 1986

DIVISION OF HIGHWAYS

STANDARD DRAWINGS

CONSTRUCTION STANDARDS - INDEX

C-01.10 Plans Symbols
C-01.11 Plans Symbols
C-01.12 Plans Symbols
C-01.30 General Abbreviations
C-01.31 General Abbreviations
C-01.32 General Abbreviations

C-02.10 Slopes, Interstate & Class A-A Roadways
C-02.20 Slopes, Class A & B Roadways
C-02.30 Slopes, Class C & D Roadways
C-02.40 Pavement Crown, Parabolic

C-03.10 Ditches & Dykes
C-03.20 Channels & Dykes Typical Parallel Installations

C-04.10 Spillway, Embankment
C-04.20 Downdrain, Embankment
C-04.30 Spillway, Embankment Length Table
C-04.40 Downdrain, Embankment, Length Table

C-05.10 Single Curb, Curb & Gutter, Embankment Curb
C-05.20 Concrete Sidewalk & Driveway

C-06.10 Turnout & Driveway Layout
C-06.20 Geometrics, Detour

C-07.10 Pavement, Concrete, Transverse Joints
C-07.20 Pavement, Concrete, Longitudinal Joints
C-07.30 Pavement, Cut & Replacement

C-08.10 Geometrics, Exit Ramp
C-08.20 Geometrics, Entrance Ramp

C-09.10 Grooving for Bituminous Shoulders
C-09.20 Grooving for Concrete Shoulders

C-10.01 Type A Guardrail Installation, Reflector Tab
C-10.02 Type B Guardrail Installation, Reflector Tab
C-10.03 Measurement Limits for W Beam & Thrie Beam System
C-10.04 G4(1W) & G4(2W) Blocked Out W Beam (Timber Post)
C-10.05 G4(1S) & G4(2S) Blocked Out W Beam (Steel Post)
C-10.06 G4(1S-Modified) Blocked Out W Beam (Steel Post) with Special Curb & Gutter
C-10.07 G9(A) & G9(B) Blocked Out Thrie Beam (Steel Post)
C-10.08 G9(C) Blocked Out Thrie Beam (Steel Post)
C-10.09 Half Barrier, Cast In Place, Slip Form
C-10.10 Half Barrier, Cast In Place, Fixed Form
C-10.11 Half Barrier, Precast
C-10.12 Median Barrier, Cast In Place, Slip Form
C-10.13 Median Barrier, Cast In Place, Fixed Form
C-10.14 Median Barrier, Precast
C-10.15 Flared Breakaway Cable Terminal Assembly (Timber Post)
C-10.16 Flared Breakaway Cable Terminal Assembly (Steel Post)
C-10.17 BCT Assembly Steel
C-10.18 BCT Assembly Timber
C-10.21 Guardrail Anchor Assembly Steel Terminal Post
C-10.22 Guardrail Anchor Assembly Timber Terminal Post
C-10.23 Buried & Bolted Anchor Timber Post
C-10.24 Buried & Bolted Anchor Steel Post
C-10.25 Transition W Beam (Timber Post) to Concrete Half Barrier (5 sheets)
C-10.30 Transition W Beam (Steel Post) to Concrete Half Barrier (5 sheets)
C-10.35 Transition W Beam (Steel Post) to Concrete Half Barrier, Curb Installation (5 sheets)
C-10.40 Transition W Beam to Concrete Median Barrier (4 sheets)
C-10.45 W Beam BCT Attenuator Assembly (5 sheets)
C-10.50 W Beam BCT Attenuator Assembly, Curb Installation (5 sheets)
C-10.55 Median W Beam BCT Attenuator Assembly (4 sheets)
C-10.96 Glare Screen, Type "P", Concrete Median Barrier
C-10.97 Glare Screen, Type "O", Concrete Median Barrier

C-11.10 Roadway Cattle Guard-Footing Type
C-11.11 Roadway Cattle Guard-Grill Clamp Detail
C-11.12 Roadway Cattle Guard-Footing Type, Misc. Details
C-11.20 Cattle Guard, Drainage
C-11.30 Cattle Guard, Railroad

C-12.10 Fence, Woven and Barbed Wire With Gates (5 sheets)
C-12.20 Fence, Chain Link Type 1 and Type 2 With Gates (3 sheets)

C-13.10 Pipe Culvert Installation
C-13.15 Typical Pipe Installation
C-13.20 Pipe, Reinforced Concrete, End Section
C-13.25 Pipe, Corrugated Metal, End Section
C-13.30 Pipe & Pipe Arch, Corrugated Metal Concrete Invert Paving
C-13.35 Structural Excavation, Payment Limits
C-13.40 Structural Excavation, Payment Limits, Structural Backfill Placement
C-13.45 Structural Backfill Placement
C-13.50 Sturctural Backfill Measurement
C-13.55 Pipe, Cattle-Vehicle Pass, Mitered End Treatment

C-14.10 Headwall, Pipe, Straight & "L" Types
C-14.20 Headwall, Normal to Pipe, 42" - 84" Pipe
C-14.21 Headwalls, 42" - 84" Pipe Skewed
C-14.30 Headwall, Drop Inlet

C-15.10 Catch Basin, Type 1
C-15.20 Catch Basin, Type 3
C-15.30 Catch Basin, Type 4
C-15.40 Catch Basin, Type 5
C-15.50 Catch Basin, Grates, Longitudinal Bars
C-15.60 Catch Basin, Grates, Transverse Bars
C-15.70 Catch Basin, Misc. Details
C-15.80 Catch Basin, Median Flush
C-15.90 Catch Basin, Median Dyke, Precast

C-16.10 Irrigation Headwalls 18" to 60" Diameter Pipes
C-16.20 Irrigation Standpipes
C-16.30 Irrigation Valve & Gate

C-17.10 Bank Protection, Rail Types 1, 2 & 3
C-17.20 Bank Protection, Rail Types 4, 5 & 6

C-18.10 Manhole Details
C-18.20 Manhole Frame & Cover

C-19.10 Ford - Concrete Walls
C-19.20 Fords - Types 1 & 2

C-21.10 Survey Monument, Frame & Cover, Right Of Way Marker
C-21.20 Standard Marker

C-22.10 Utility Line, Protective Concrete Slab

	Pen Size	NEW	Pen Size	EXISTING
City Limits (Zip-a-Tone No.113, Shade inside)			1	
County Line			2	
Forest or Reservation Boundry (Line-Shading, Shade inside)			2	
Property Line	1	P/L P/L	00	P/L P/L
Quarter Section Line			1	
Right-Of-Way Line	1	New R/W	00	Existing R/W
Section Line			1	
Sixteenth Section Line			1	
State or National Boundry			4	
Township or Range Line			2	
Mile Post	1	MP	00	MP
Right-Of-Way Marker	1		00	
Survey Monument	1		00	
Angle Point	1		00	
Construction ℄, Station Marks	3-0		0-0	
Quarter Corners			00	
Section Corners			00	
Survey Control Point	1		00	
Access Control (Chart Pak 256 TAA 1/8" wide, Shade outside)	1	New	00	Existing
Curb & Gutter with Depressed Curb (1" = 20')	1	.05" .10"	00	.05" .10"
Curb & Gutter with Depressed Curb (1" = 100')	1	.05" .05"	00	.05" .05"

	Pen Size	NEW	Pen Size	EXISTING
Curb, Single with Depressed Area	1	.05"	00	.05"
Pavement & Sidewalk Edge	1		00	
Turnout (Indicate width & surface material)	1	R	00	R
Cut	0	C C		
Fill	0	F F		
Transition; Cut to Fill	0	C F		
Railroad Track (1" = 20')			00	
Railroad Track (1" = 100')			00	
Bank Protection	1		00	
Bridge	1		00	
Building	1	Floor Elevation 1984.69'	00	Floor Elevation 1984.69'
Catch Basin, Curb & Gutter	1		00	
Catch Basin, Median Dike			00	
Catch Basin, Off Roadway, Flush	1		00	
Catch Basin, Single Curb	1		00	
Cattle Guard	1		00	
Concrete Box Culvert	1		00	
Dike	1		00	
Downdrain, one way	0		00	

DESIGN APPROVED	ARIZONA DEPARTMENT OF TRANSPORTATION HIGHWAYS DIVISION- STANDARD DRAWINGS	REV. DATE
APPROVED FOR DISTRIBUTION	PLANS SYMBOLS	PLAN NO. C-01.10

	Pen Size	NEW	Pen Size	EXISTING
Downdrain, two way	0		00	
Manhole	1		00	
Manhole Frame & Cover, Reset	1			
Retaining Wall	1		00	
Rock Riprap	1		00	
Spillway, one way	0		00	
Spillway, two way	0		00	
Straight Headwall with End Section (1" = 20')	1		00	
Straight Headwall with End Section (1" = 100')	1		00	
"U" Headwall with End Section (1" = 20')	1		00	
"U" Headwall with End Section (1" = 100')	1		00	
Wing Headwall with End Section (1" = 20')	1		00	
Wing Headwall with End Section (1" = 100')	1		00	
Plan, Aggregate Surface (Zip-a-Tone No. 275-20)	1		00	W AGGREGATE
Bituminous Pavement (Zip-a-Tone No. 309)	1		00	W BITUMINOUS
Concrete Pavement (Zip-a-Tone No. 340)	1		00	W CONCRETE
Graded Surface	1		00	W GRADED
Obliterate Pavement (Zip-a-Tone No. 438)	1			
Section, Asphaltic Concrete Friction Course	1		00	ACFC
Bituminous Pavement	1		00	BITUMINOUS
Concrete Pavement	1		00	CONCRETE

	Pen Size	NEW	Pen Size	EXISTING
Aggregate Base	1		00	AGGREGATE
Select Material	1		00	SELECT
Subgrade Seal	1		00	SUBGRADE
Ground Line Profile			0	
Ground Line Section	0		00	
Barbed Wire Fence & Gate	0		00	
Chain Link Fence & Gate	0		00	
Guard Rail & Breakaway Cable Terminal	1		00	
Gas Line	0	G 3"	00	G 3"
Irrigation Ditch, Concrete	0	IRR	00	IRR
Irrigation Ditch, Earth	0	IRR	00	IRR
Irrigation Line (1" = 20')	0	IRR 24"	00	IRR 24"
Irrigation Line (1" = 100')	0	IRR 24"	00	IRR 24"
Power or Joint Use Line	1		00	
Sanitary Sewer (1" = 20')	0	S 8"	00	S 8"
Sanitary Sewer (1" = 100')	0	S 8"	00	S 8"
Storm Drain (1" = 20')	0		00	SD 24"
Storm Drain (1" = 100')	0	SD 24"	00	SD 24"
Street Light with Mast Arm	1		00	

DESIGN APPROVED	ARIZONA DEPARTMENT OF TRANSPORTATION HIGHWAYS DIVISION - STANDARD DRAWINGS	REV. DATE
APPROVED FOR DISTRIBUTION	PLANS SYMBOLS	PLAN NO. C-01.11

	Pen Size	NEW	Pen Size	EXISTING
Telephone Booth	1	T	00	T
Telephone Line	1	T T	00	T T T T
Utility Pole with Down Guy & Anchor	1		00	
Water or Gas Meter Box	0	W or G	00	W or G
Water or Gas Valve	0	W or G	00	W or G
Water Line	0	W 6"	00	W 6"
Drainage Channel	1		00	
Drainage Ditch	1		00	
Major Wash			00	Name
Minor Wash			00	
Hedge	0		00	
Palm Tree	0		00	
Shrubbery	0		00	
Unclassified Tree	0		00	
Advertising Sign, Large			00	
Advertising Sign, Small			00	
Traffic Sign, Single Post	1		00	
Traffic Sign, Two or More Posts	1		00	
℄ Grade, Profile	2		00	
Dimensions	00			
Visible Outlines, Sections, etc.	1			

	Pen Size	NEW	Pen Size	EXISTING
Ugnd Tel/ Telegraph	1	T T	00	T T
Ugnd Power/Joint Use	1	P P	00	P P

NOTE

ALL LINES AND SYMBOLS NOT SHOWN WILL CONFORM TO;

American National Standard Lines for Engineering Drawings (ANSI Y14.2-1973)

American National Standard Symbols for Section Lining (ANSI Y14.2-1973)

DESIGN APPROVED	ARIZONA DEPARTMENT OF TRANSPORTATION HIGHWAYS DIVISION- STANDARD DRAWINGS	REV. DATE
APPROVED FOR DISTRIBUTION	PLANS SYMBOLS	PLAN NO. C-01.12

WORDS	TITLE	TEXT
Abutment	ABT.	abt
Acceleration	ACC.	acc
Acres	AC.	ac
Aggregate	AGG.	agg
Aggregate Base	AB	AB
Ahead	AHD.	ahd
Aluminum	AL.	Al
American Association of State Highway and Transportation Officials	AASHTO	AASHTO
American Concrete Institute	ACI	ACI
American Institute of Steel Construction	AISC	AISC
American National Standards Institute	ANSI	ANSI
American Road and Transportation Builders Association	ARTBA	ARTBA
American Society for Testing Materials	ASTM	ASTM
Amount	AMT.	amt
And Husband	ET VIR.	et vir
And Others	ET AL.	et al
And Wife	ET UX.	et ux
Approximate	APX.	apx
Asphalt	ASPH.	asph
Asphaltic Concrete	AC	AC
Asphaltic Concrete Friction Course	ACFC	ACFC
Asphaltic Concrete Surface Course	ACSC	ACSC
Avenue	AVE.	ave
Average Daily Traffic	ADT	ADT
Back	BK.	bk
Backfill	BKFL.	bkfl
Balance	BAL.	bal
Balance Point	BP	BP
Bank Protection	BANK PRT.	bank prt
Barbed Wire	BW	BW
Bearing	BRG.	brg
Begin	BGN.	bgn
Begin Full Super	BFS	BFS
Bench Mark	BM	BM
Bevel or Beveled	BEV.	bev
Bituminous	BIT.	bit.
Bituminous Mixture	BIT. MIX	bit. mix
Bituminous Surface Treatment	BST	BST
Bituminous Treated Base	BTB	BTB
Black Steel Pipe	BSP	BSP
Borrow	BOR.	bor
Boulevard	BLVD.	blvd
Boundary	BDY.	bdy

WORDS	TITLE	TEXT
Brass Cap	BC	BC
Breakaway Cable Terminal	BCT	BCT
Bridge	BR.	br
Building	BLDG.	bldg
Calculated	CALC.	calc
Cast-In-Place	C-I-P	C-I-P
Cast Iron	CI	CI
Cast Iron Pipe	CIP	CIP
Catch Basin	CB	CB
Cattle Guard	CG	CG
Cattle Pass	CP	CP
Cement	CEM.	cem
Cement Treated Base	CTB	CTB
Center	CTR.	ctr
Center Line	℄	℄
Center To Center	C.TO C.	c to c
Channel	CHAN.	chan
Class	CL.	cl
Compact or Compaction	COMP.	comp
Complete In Place	C. IN P.	C. IN P.
Concrete	CONC.	conc
Concrete Box Culvert	CBC	CBC
Connection	CONN.	conn
Construct or Construction	CST.	cst
Continuous	CONT.	cont
Corner	COR.	cor
Correction	CORR.	corr
Corrugated Aluminum Pipe	CAP	CAP
Corrugated Aluminum Pipe Arch	CAPA	CAPA
Corrugated Steel Pipe	CSP	CSP
Corrugated Steel Pipe Arch	CSPA	CSPA
County	CO.	co
Crossing	X-ING	x-ing
Cross Section	X-SCT.	x-sct
Crown	CR.	cr
Cubic	CU.	cu
Cubic Feet Per Second	CFS	cfs
Cubic Yard or Cubic Yards	CY	cy

WORDS	TITLE	TEXT
Culvert	CLV.	clv
Curb And Gutter	C & G	C & G
Curve To Spiral	C.S.	C.S.
Deceleration	DCL.	dcl
Deflection	DEF.	def
Deflection Of Total Curve	I	I
Degree Of Curve	D	D
Delineator	DEL.	del
Delta	Δ	Δ
Depressed Curb	DC	DC
Detail	DTL.	dtl
Diameter	DIA.	dia
Dike	DK.	dk
Distance	DST.	dst
Ditch	DT.	dt
Division	DIV.	div
Double	DBL.	dbl
Drain or Drainage	DRN.	drn
Drainage Area	DA	DA
Drawing	DWG.	dwg
Drive	DR.	dr
Each	EA.	ea
Easement	ESM.	esm
East	E	E
Eastbound	EB	EB
Elevation	ELEV.	elev
Elongated	ELG.	elg
Embankment	EMB.	emb
End Full Super	EFS	EFS
Engineer	ENGR.	engr

DESIGN APPROVED	STATE OF ARIZONA DEPARTMENT OF TRANSPORTATION DIVISION OF HIGHWAYS STANDARD DRAWINGS	REV. 1/83
APPROVED FOR DISTRIBUTION	GENERAL ABBREVIATIONS	DRAWING NO. C-01.30

WORDS	TITLE	TEXT
Equation	EQ.	eq
Estimate	EST.	est
Excavation	EX.	ex
Existing	EXST.	exst
Extend or Extension	EXT.	ext
Federal	FED.	fed.
Feet or Foot	FT.	ft
Feet Per Second	FPS	fps
Fence	FC.	fc
Figure	FG.	fg
Finish	FN.	fn
Floor	FL.	fl
Flowage Easement	FE	FE
Flow Line	F.L.	F.L.
Forest	FST.	fst
Found	FND.	fnd
Frame	FR.	fr
Freeway	FWY.	fwy
Frontage	FRT.	frt
Furnish or Furnished	FURN.	furn
Future	FUT.	fut
Galvanize or Galvanized	GALV.	galv
Gauge	GA.	ga
Government	GOVT.	govt
Grade	GR.	gr
Grader	GDR.	gdr
Grade Separation	GS	GS
Ground	GND.	gnd
Grubbing	GRB.	grb
Guard	GRD.	grd
Guard Rail	GR	GR
Headwall	HDWL.	hdwl
Height	HT.	ht
High Water	HW	HW

WORDS	TITLE	TEXT
Highway	HWY.	hwy
Horizontal	HOR.	hor
Horizontal Elliptical Reinforced Concrete Pipe	HERCP	HERCP
House	HSE.	hse
Improvement	IMPR.	impr
Inch or Inches	IN.	in.
Include, Included or Inclusive	INCL.	incl
Inside Diameter	ID	ID
Iron Pipe	IP	IP
Irrigation	IRR.	irr
Joint	JT.	jt
Junction	JCT.	jct
Laboratory	LAB.	lab
Lateral	LAT.	lat
Left	LT.	lt
Length or Length of Curve	L	L
Line	LN.	ln
Linear or Lineal	LIN.	lin
Location	LOC.	loc
Manhole	MH	MH
Material	MTL.	mtl
Maximum	MAX	max
Median	MED.	med
Mile or Miles	MI.	mi
Mile Post	MP	MP
Miles Per Hour	MPH	mph
Mineral Aggregate	MA	MA

WORDS	TITLE	TEXT
Minimum	MIN	min
Miscellaneous	MISC.	misc
Modify or Modified	MOD.	mod.
Monument	MN.	mn
Mountain	MT.	mt
National	NATL.	natl
Non-Reinforced Cast-In-Place Concrete Pipe	NRCIPCP	NRCIPCP
Non-Reinforced Concrete Pipe	NRCP	NRCP
North	N	N
Northbound	NB	NB
Number	NO.	no.
Obliterate	OBL.	obl
Original	ORIG.	orig
Outside Diameter	OD	OD
Overpass	O.P.	O.P.
Parcel	PRC.	prc
Parkway	PKWY.	pkwy
Pavement	PVMT.	pvmt
Piece	PC.	pc
Place	PL.	pl
Plasticity Index	PI	PI
Point	PT.	pt
Point Of Compound Curvature	P.C.C.	P.C.C.
Point Of Curvature	P.C.	P.C.
Point Of Intersection	P.I.	P.I.
Point Of Reverse Curvature	P.R.C.	P.R.C.
Point Of Tangency	P.T.	P.T.
Point On Curve	P.O.C.	P.O.C.

DESIGN APPROVED	STATE OF ARIZONA DEPARTMENT OF TRANSPORTATION DIVISION OF HIGHWAYS STANDARD DRAWINGS	REV. 1/83
APPROVED FOR DISTRIBUTION	GENERAL ABBREVIATIONS	DRAWING NO. C-01.31

WORDS	TITLE	TEXT
Point On Semi-Tangent	P.O.S.T.	P.O.S.T.
Point On Spiral	P.O.S.	P.O.S.
Point On Tangent	P.O.T.	P.O.T.
Poly (Vinyl Chloride)	PVC	PVC
Portland Cement Concrete	PCC	PCC
Portland Cement Concrete Pavement	PCCP	PCCP
Pounds	LBS.	lbs
Pounds Per Square Inch	PSI	psi
Preliminary	PRLM.	prlm
Prestress, Prestressed or Prestressing	PS.	ps
Project	PRJ.	prj
Property Line	P/L	P/L
Protection	PRT.	prt
Provision or Provide	PRV.	prv
Quadrant	QUAD.	quad.
Quantity or Quantities	QUAN.	quan
Quantity Of Drainage Runoff	Q	Q
Radius	R	R
Railroad	RR	RR
Range	R.	R.
Reconstruct	RECST.	recst
Record	REC.	rec
Reference	REF.	ref
Reinforced or Reinforcing	REINF.	reinf
Reinforced Concrete	RC	RC
Reinforced Concrete Pipe	RCP	RCP
Reinforced Concrete Pipe Arch	RCPA	RCPA
Reinforced Concrete Pipe Rubber-Gasketed	RCPRG	RCPRG
Reinforcing bar	REBAR	rebar
Relocate, Relocation or Relocated	RELOC.	reloc
Required	REQD.	reqd
Reservation	RESV.	resv
Residence	RES.	res
Retain or Retaining	RET.	ret
Revised or Revision	REV.	rev.

WORDS	TITLE	TEXT
Right	RT.	rt
Right Of Way	R/W	R/W
Road	RD.	rd
Roadway	RDWY.	rdwy
Section	SCT.	sct
Select Material	SM	SM
Sheet	SH.	sh
Shrinkage	SHR.	shr
Sidewalk	SWLK.	swlk
Sight Distance-Intersection	SD_I	SD_I
Sight Distance-Passing	SD_P	SD_P
Sight Distance-Stopping	SD_S	SD_S
Single	SGL.	sgl
Skew	SK.	sk
South	S	S
Southbound	SB	SB
Special	SPCL.	spcl
Specification	SPEC.	spec
Spiral Rate Of Change	a	a
Spiral To Curve	S.C.	S.C.
Spiral To Tangent	S.T.	S.T.
Square	SQ.	sq
Square Yard	SY	sy
Standard	STD.	std
State Route	SR	SR
Station	STA.	sta
Street	ST.	st
Structure or Structural	STR.	str
Subdivision	SUBDIV.	subdiv
Subgrade	SG	SG
Subgrade Seal	SS	SS
Survey	SUR.	sur
Swell	SW.	sw
Symmetrical	SYM.	sym

WORDS	TITLE	TEXT
Tangent	TAN.	tan.
Tangent Length	T	T
Tangent To Spiral	T.S.	T.S.
Telegraph	TLG.	tlg
Telephone	TEL.	tel
Temporary	TEMP.	temp
Temporary Construction Easement	TCE	TCE
Topography	TOPO.	topo
Township	T.	T.
Traffic Interchange	TI	TI
Transition	TRNS.	trns
Turnout	T.O.	T.O.
Typical	TYP.	typ
Underground	UGND.	ugnd
Underpass	U.P.	U.P.
Variable	VAR.	var
Vertical	VERT.	vert.
Vertical Curve	VC	VC
Vertical Elliptical Reinforced Concrete Pipe	VERCP	VERCP
Vitrified Clay Pipe	VCP	VCP
Volume	VOL.	vol
Welded Wire Fabric	WWF	WWF
West	W	W
Westbound	WB	WB
Western Wood Products Association	WWPA	WWPA
Wide or Width	W.	W.
Yard	YD.	yd

DESIGN APPROVED

APPROVED FOR DISTRIBUTION

STATE OF ARIZONA
DEPARTMENT OF TRANSPORTATION
DIVISION OF HIGHWAYS
STANDARD DRAWINGS

REV 1/83

GENERAL ABBREVIATIONS

DRAWING NO. C-01.32

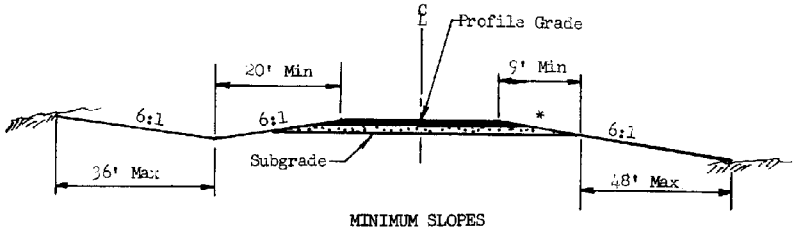

MINIMUM SLOPES

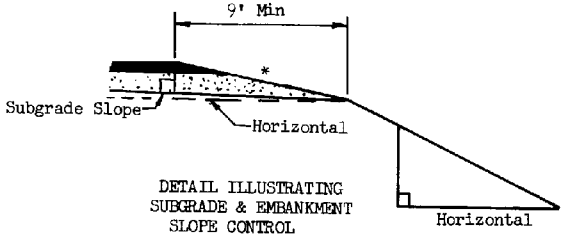

DETAIL ILLUSTRATING SUBGRADE & EMBANKMENT SLOPE CONTROL

GENERAL NOTES

1. Roadway width, cut ditch, superelevation, and type and thickness of roadway surfacing will be shown on project plans.
2. For cuts up to 6' use 5' semi-tangents for slope rounding. For each additional foot of cut add 1' to semi-tangent to 11' maximum.
3. Wetted perimeter should not extend above subgrade in unpaved ditch.
4. Pavement structure slopes are relative to subgrade slope. Slopes beyond the pavement structure, such as embankment and cut slopes, are relative to horizontal.
5. The desirable maximum embankment slope rate should be 4:1 within interchange and grade separation areas.
6. When median slopes intersect, see project plans.

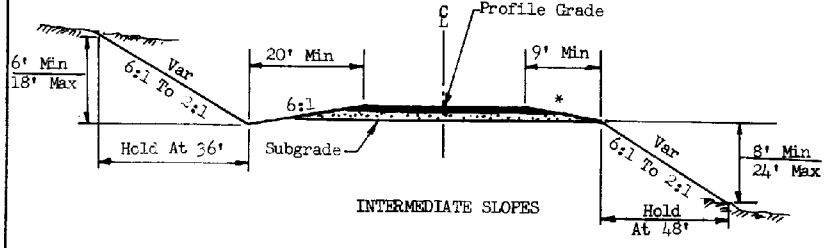

INTERMEDIATE SLOPES

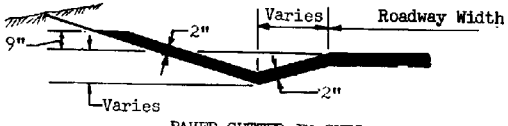

PAVED GUTTER IN CUTS

*Variable to 6:1 maximum

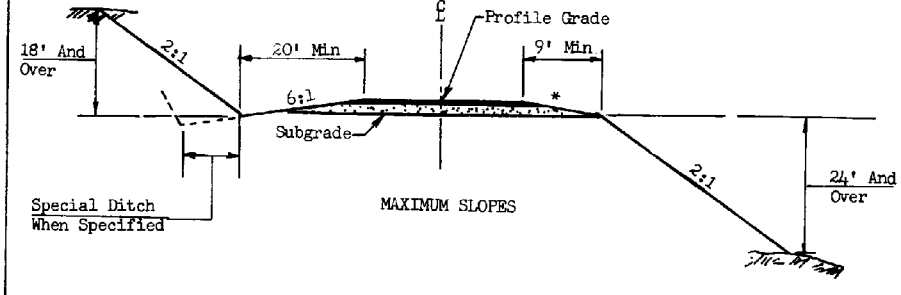

MAXIMUM SLOPES

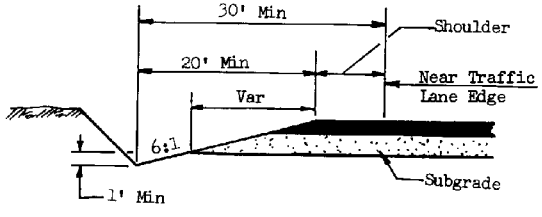

MINIMUM DITCH CONDITIONS

TYPICAL SECTIONS

DESIGN APPROVED	STATE OF ARIZONA DEPARTMENT OF TRANSPORTATION DIVISION OF HIGHWAYS STANDARD DRAWINGS	REV. 1/83
APPROVED FOR DISTRIBUTION	SLOPES, INTERSTATE & CLASS A-A ROADWAYS	DRAWING NO. C-02.10

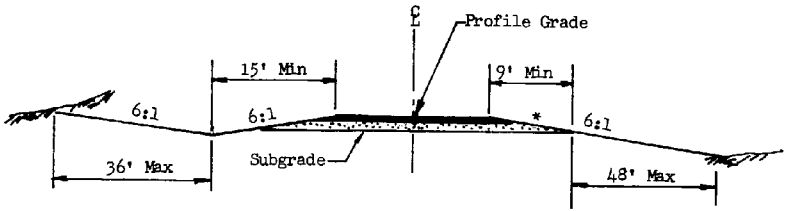

MINIMUM SLOPES

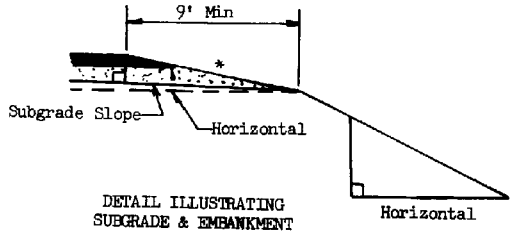

DETAIL ILLUSTRATING SUBGRADE & EMBANKMENT SLOPE CONTROL

GENERAL NOTES

1. Roadway width, cut ditch, superelevation, and type and thickness of roadway surfacing will be shown on project plans.
2. For cuts up to 6' use 5' semi-tangents for slope rounding. For each additional foot of cut add 1' to semi-tangent to 11' maximum.
3. Wetted perimeter should not extend above subgrade in unpaved ditch.
4. Pavement structure slopes are relative to subgrade slope. Slopes beyond the pavement structure, such as embankment and cut slopes, are relative to horizontal.

*Variable to 6:1 maximum

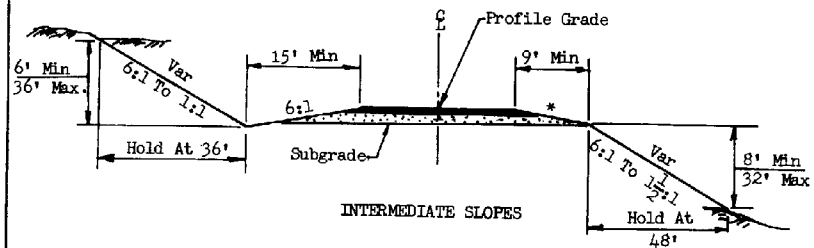

INTERMEDIATE SLOPES

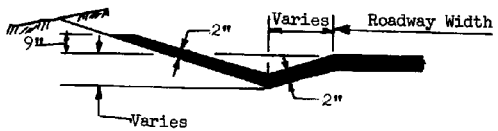

PAVED GUTTER IN CUTS

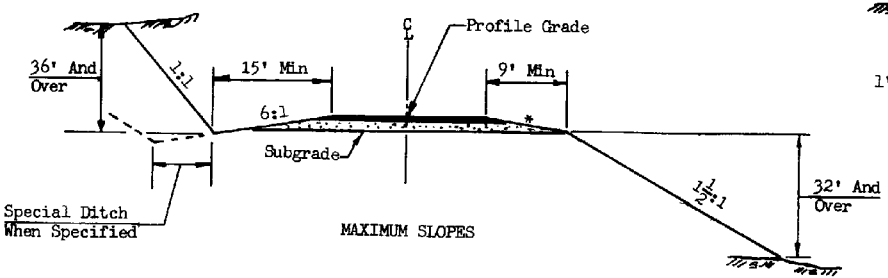

MAXIMUM SLOPES

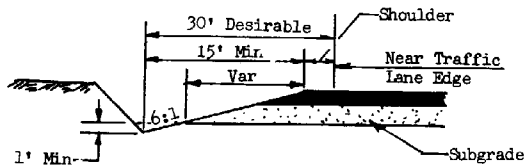

MINIMUM DITCH CONDITIONS

TYPICAL SECTIONS

DESIGN APPROVED	STATE OF ARIZONA DEPARTMENT OF TRANSPORTATION DIVISION OF HIGHWAYS STANDARD DRAWINGS	REV. 1/83
APPROVED FOR DISTRIBUTION	SLOPES CLASS A & B ROADWAYS	DRAWING NO. C-02.20

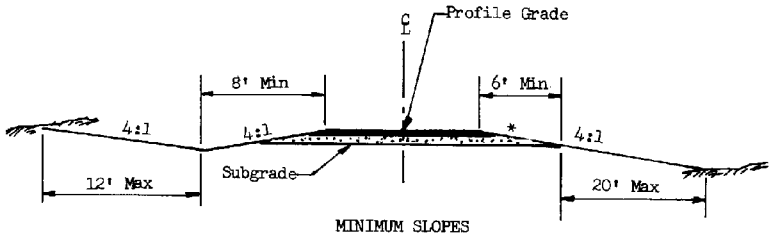

MINIMUM SLOPES

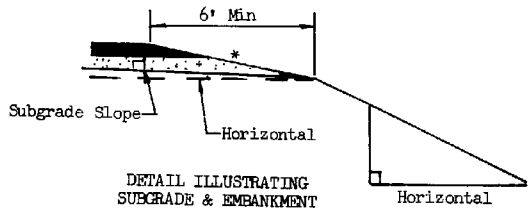

DETAIL ILLUSTRATING SUBGRADE & EMBANKMENT SLOPE CONTROL

GENERAL NOTES

1. Roadway width, cut ditch, superelevation, and type and thickness of roadway surfacing will be shown on project plans.
2. For cuts up to 6' use 5' semi-tangents for slope rounding. For each additional foot of cut add 1' to semi-tangent to 11' maximum.
3. Wetted perimeter should not extend above subgrade in unpaved ditch.
4. Pavement structure slopes are relative to subgrade slope. Slopes beyond the pavement structure, such as embankment and cut slopes, are relative to horizontal.

*Variable to 4:1 maximum

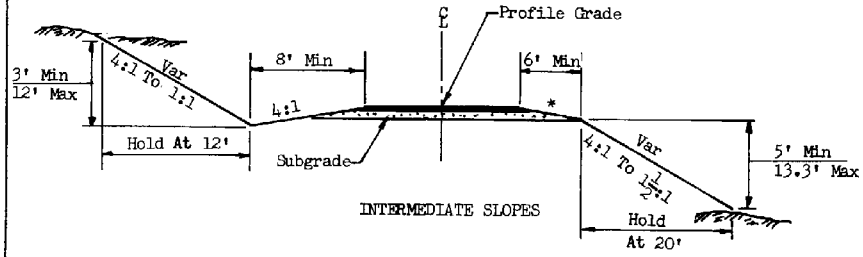

INTERMEDIATE SLOPES

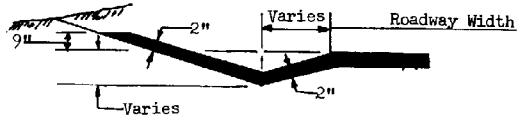

PAVED GUTTER IN CUTS

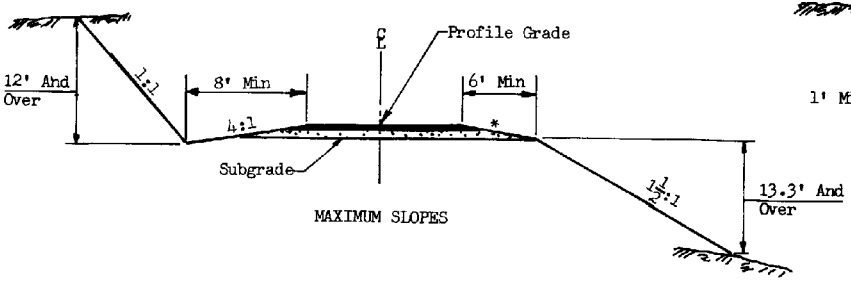

MAXIMUM SLOPES

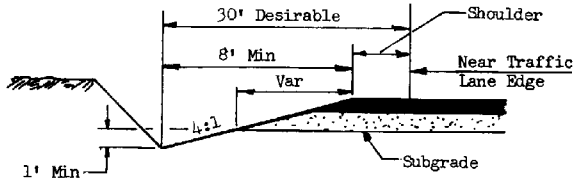

MINIMUM DITCH CONDITIONS

TYPICAL SECTIONS

DESIGN APPROVED	STATE OF ARIZONA DEPARTMENT OF TRANSPORTATION DIVISION OF HIGHWAYS STANDARD DRAWINGS	REV. 1/83
APPROVED FOR DISTRIBUTION	SLOPES CLASS C & D ROADWAYS	DRAWING NO. C-02.30

CUMULATIVE PERCENT OF CROWN "C" FOR EACH FOOT RIGHT OR LEFT OF ℄

W = FULL WIDTH OF ROADWAY - FEET

X →	2'	4'	6'	8'	10'	12'	14'	16'	18'	20'	22'	24'	26'	28'	30'	32'	34'	36'	38'	40'	42'	44'
90	0.20	0.79	1.78	3.16	4.94	7.11	9.68	12.64	16.00	19.75	23.90	28.44	33.38	38.72	44.44	50.57	57.09	64.00	71.31	79.01	87.11	95.61
88	0.21	0.83	1.86	3.31	5.17	7.44	10.12	13.22	16.74	20.66	25.00	29.75	34.92	40.50	46.49	52.89	59.71	66.94	74.59	82.64	91.12	C
86	0.22	0.87	1.95	3.46	5.41	7.79	10.60	13.85	17.52	21.63	26.18	31.15	36.56	42.40	48.67	55.38	62.52	70.09	78.10	86.53	95.40	
84	0.23	0.91	2.04	3.63	5.67	8.16	11.11	14.51	18.37	22.68	27.44	32.65	38.32	44.44	51.02	58.05	65.53	73.47	81.86	90.70	C	
82	0.24	0.95	2.14	3.81	5.95	8.57	11.66	15.23	19.27	23.80	28.79	34.27	40.21	46.64	53.54	60.92	68.77	77.10	85.90	95.18		
80	0.25	1.00	2.25	4.00	6.25	9.00	12.25	16.00	20.25	25.00	30.25	36.00	42.25	49.00	56.25	64.00	72.25	81.00	90.25	C		
78	0.26	1.05	2.37	4.20	6.57	9.47	12.89	16.83	21.30	26.30	31.82	37.87	44.44	51.54	59.17	67.32	76.00	85.21	94.94			
76	0.28	1.11	2.49	4.43	6.93	9.97	13.57	17.73	22.44	27.70	33.52	39.89	46.81	54.29	62.33	70.91	80.06	89.75	C			
74	0.29	1.17	2.63	4.67	7.30	10.52	14.32	18.70	23.67	29.22	35.35	42.07	49.38	57.27	65.74	74.80	84.44	94.67				
72	0.31	1.23	2.78	4.94	7.72	11.11	15.12	19.75	25.00	30.86	37.35	44.44	52.16	60.49	69.44	79.01	89.20	C				
70	0.33	1.31	2.94	5.22	8.16	11.76	16.00	20.90	26.45	32.65	39.51	47.02	55.18	64.00	73.47	83.59	94.37					
68	0.35	1.38	3.11	5.54	8.65	12.46	16.95	22.15	28.03	34.60	41.87	49.83	58.48	67.82	77.85	88.58	C					
66	0.37	1.47	3.30	5.87	9.18	13.21	17.99	23.49	29.73	36.71	44.41	52.86	62.03	71.94	82.59	93.97						
64	0.39	1.56	3.52	6.25	9.77	14.06	19.14	25.00	31.64	39.06	47.27	56.25	66.02	76.56	87.89	C						
62	0.42	1.66	3.75	6.66	10.41	14.98	20.40	26.64	33.71	41.62	50.36	59.94	70.34	81.58	93.65							
60	0.44	1.78	4.00	7.11	11.11	16.00	21.78	28.44	36.00	44.44	53.78	64.00	75.11	87.11	C							
58	0.48	1.90	4.28	7.61	11.89	17.12	23.31	30.44	38.52	47.56	57.55	68.49	80.38	93.22								
56	0.51	2.04	4.59	8.16	12.76	18.37	25.00	32.65	41.33	51.02	61.73	73.47	86.22	C								
54	0.55	2.19	4.94	8.78	13.72	19.75	26.89	35.12	44.44	54.87	66.39	79.01	92.73									
52	0.59	2.37	5.33	9.47	14.79	21.30	28.99	37.87	47.93	59.17	71.60	85.21	C									
50	0.64	2.56	5.76	10.24	16.00	23.04	31.36	40.96	51.84	64.00	77.44	92.16										
48	0.69	2.78	6.25	11.11	17.36	25.00	34.03	44.44	56.25	69.44	84.03	C										
46	0.76	3.02	6.81	12.10	18.90	27.22	37.05	48.39	61.25	75.61	91.49											
44	0.83	3.31	7.44	13.22	20.66	29.75	40.50	52.89	66.94	82.64	C											
42	0.91	3.63	8.16	14.51	22.68	32.65	44.44	58.05	73.47	90.70												
40	1.00	4.00	9.00	16.00	25.00	36.00	49.00	64.00	81.00	C												
38	1.11	4.43	9.97	17.73	27.70	39.89	54.29	70.91	89.75													
36	1.23	4.94	11.11	19.75	30.86	44.44	60.49	79.01	C													
34	1.38	5.50	12.46	22.15	34.60	49.83	67.82	88.58														
32	1.56	6.25	14.06	25.00	39.06	56.25	76.56	C														
30	1.78	7.11	16.00	28.44	44.44	64.00	87.11															
28	2.04	8.16	18.37	32.65	51.02	73.47	C															
26	2.37	9.47	21.30	37.87	59.17	85.21																
24	2.78	11.11	25.00	44.44	69.44	C																
22	3.31	13.22	29.75	52.89	82.64																	
20	4.00	16.00	36.00	64.00	C																	
18	4.94	19.75	44.44	79.01																		
16	6.25	25.00	56.25	C																		
14	8.16	32.63	73.47																			
12	11.11	44.44	C																			

FORMULA

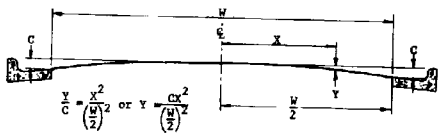

$$\frac{Y}{C} = \frac{X^2}{\left(\frac{W}{2}\right)^2} \text{ or } Y = \frac{CX^2}{\left(\frac{W}{2}\right)^2}$$

USE OF TABLE

Example:

Assume W = 40 ft. and C = 0.45 ft.
Find Y for X = 8 ft.

Table shows Y = 16.00% of C,
or 0.16 X 0.45' = 0.072 ft.

DESIGN APPROVED	STATE OF ARIZONA DEPARTMENT OF TRANSPORTATION DIVISION OF HIGHWAYS STANDARD DRAWINGS	REV.	1/83
APPROVED FOR DISTRIBUTION	PAVEMENT CROWN, PARABOLIC	DRAWING NO.	C-02.40

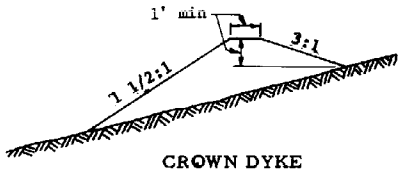

CROWN DYKE

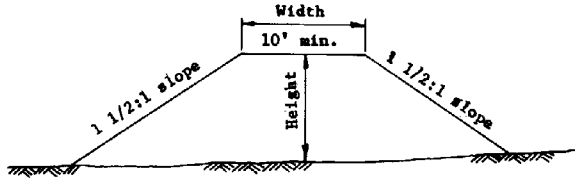

TYPE A DYKE

GENERAL NOTES

1. Dimensions of ditches and dykes, as shown on plans, are top width, height and length.
2. Ditches shall be constructed with a minimum grade to prevent erosion. Ditch outlet treatment shall be as provided on plans.
3. See Std. C-03.20 for parallel channel and dyke treatment with respect to recovery area.

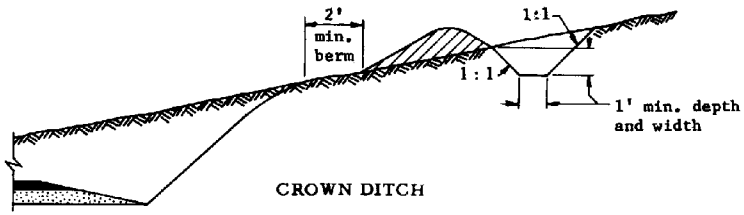

CROWN DITCH

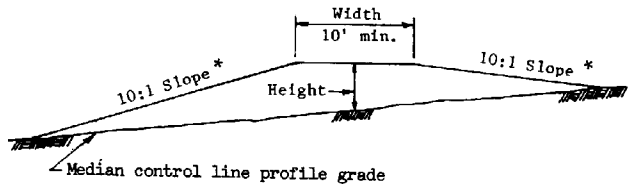

TYPE B TRANSVERSE MEDIAN DYKE

* Slope relative to grade of median at intersection with toe.

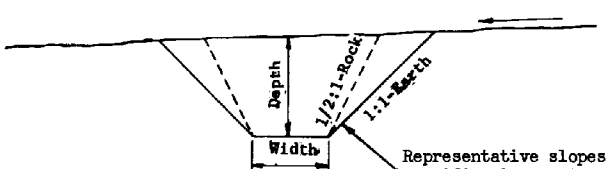

Representative slopes only. For specific slopes, See plans.

GENERAL CHANNEL SLOPES

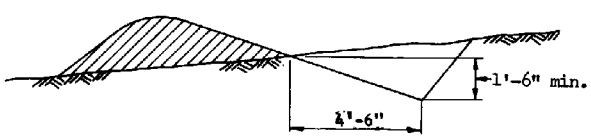

GRADER DITCH

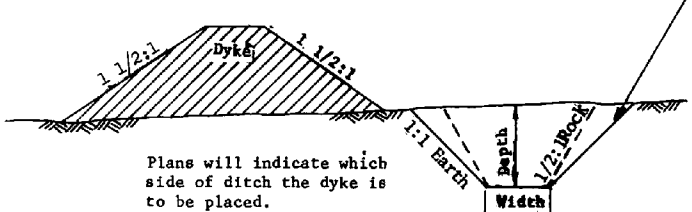

Plans will indicate which side of ditch the dyke is to be placed.

DITCH AND DYKE

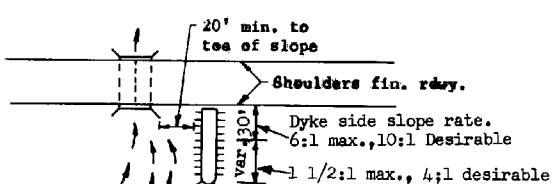

TYPICAL DYKE INSTALLATION AT STRUCTURE

Place dykes at structures to create a water cushion.

DESIGN APPROVED	STATE OF ARIZONA DEPARTMENT OF TRANSPORTATION DIVISION OF HIGHWAYS STANDARD DRAWINGS	REV. 1/83
APPROVED FOR DISTRIBUTION	DITCHES AND DYKES	DRAWING NO. C-03.10

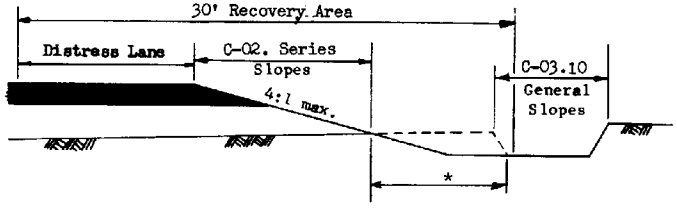

* If channel lies within recovery area, use continuation of emb. slope for inner channel slope and 4:1 slope rate for outer channel slope.

CHANNEL

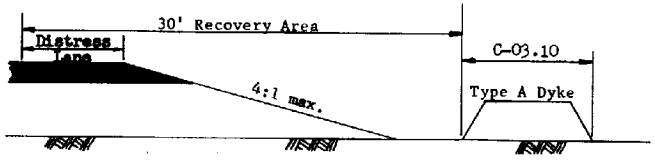

DYKE OUTSIDE RECOVERY AREA

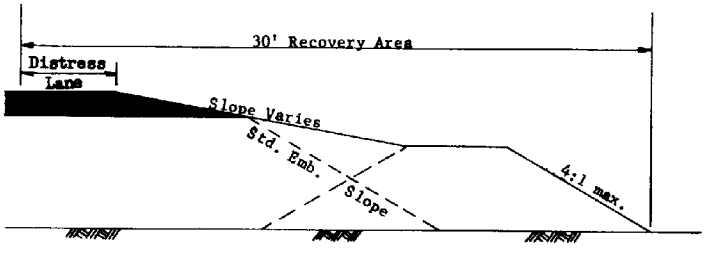

DYKE WITHIN RECOVERY AREA

GENERAL NOTES

See also Std. C-03.10

DESIGN APPROVED	STATE OF ARIZONA DEPARTMENT OF TRANSPORTATION DIVISION OF HIGHWAYS STANDARD DRAWINGS	REV. 1/83
APPROVED FOR DISTRIBUTION	CHANNELS & DYKES TYP. PARALLEL INSTALLATIONS	DRAWING NO. C-03.20

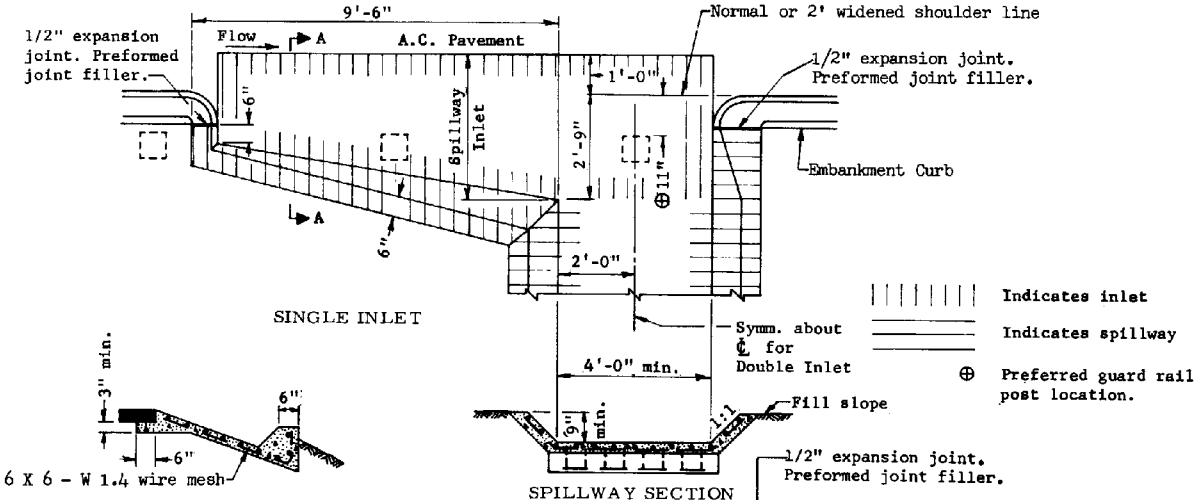

GENERAL NOTES

1. Concrete for the spillway inlet, spillway and outlet shall be Class B.
2. Where rock is encountered, the outlet may be omitted.
3. When outlet is used, the wire mesh shall extend through the joint into the outlet in lieu of bending into the key.
4. Spillway invert slope shall be uniformly downward from A to B.

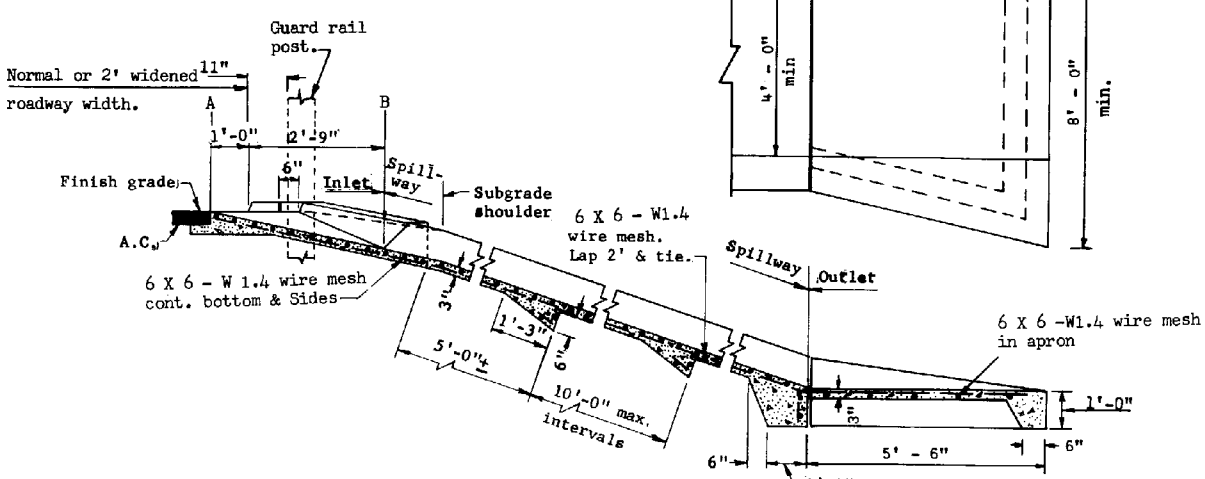

SECTION ON SPILLWAY ℄
DOUBLE INLET

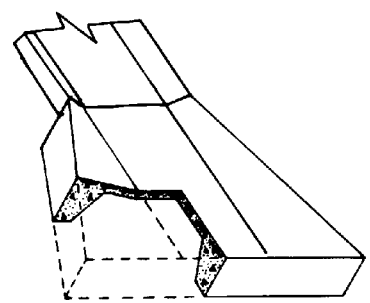

OUTLET DETAIL

DESIGN APPROVED	STATE OF ARIZONA DEPARTMENT OF TRANSPORTATION DIVISION OF HIGHWAYS STANDARD DRAWINGS	REV. 1/83
APPROVED FOR DISTRIBUTION	SPILLWAY, EMBANKMENT	DRAWING NO. C-04.10

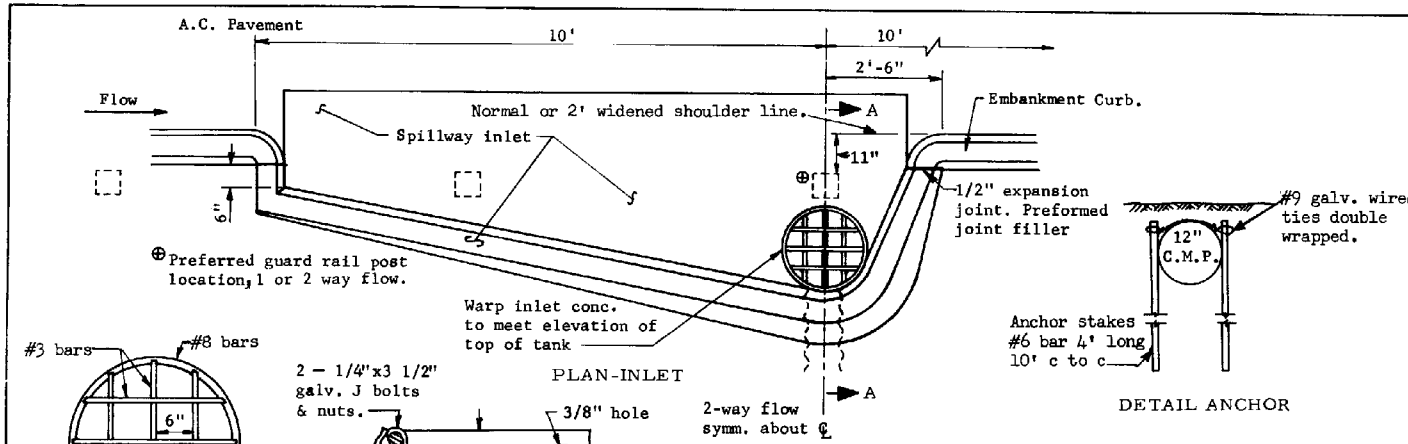

PLAN-INLET

DETAIL ANCHOR

GENERAL NOTES

1. Round all exposed concrete corners.
2. Tank, stub, trash rack and angle supports shall be shop fabricated, welded and galvanized in accordance with ASHTO M 36.
3. Stub shall have annular corrugation. Downdrain piping beyond stub may be either annular or helical.
4. Permissable couplings shall be mechanical, heat-shrinkable polyolatin sheet; one piece lap type neoprene sheet or slip seam; all 12" min. width and 18 ga. min..
5. Inlet invert slope shall be uniformly downward from one foot inside of embankment curb base.
6. Inlet and outlet concrete shall be Class B. Embankment curb concrete shall be in accordance with Standard Specifications.

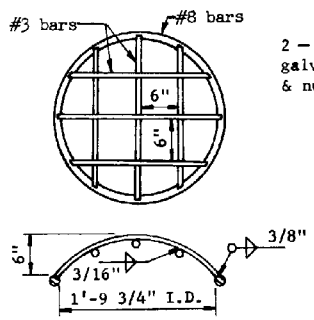

DETAIL-TRASH RACK
STEEL TO BE GALVANIZED AFTER FABRICATION

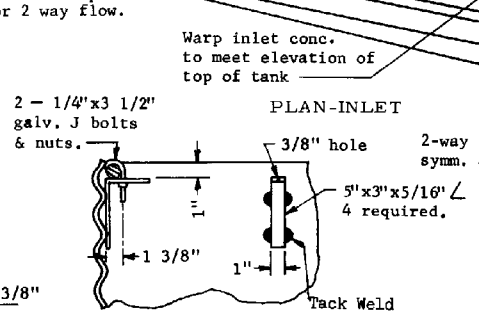

DETAIL-ANGLE SUPPORTS FOR TRASH RACK

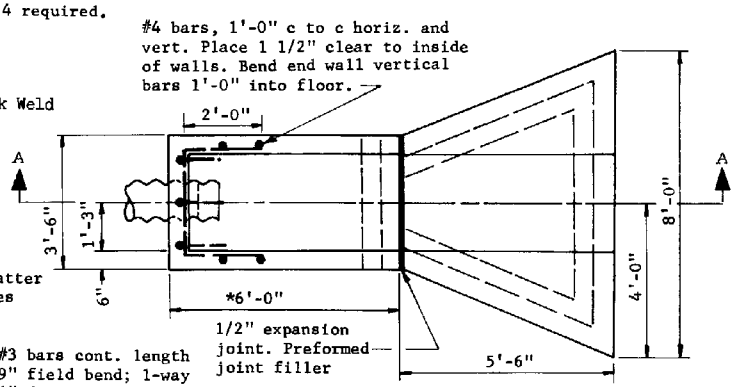

OUTLET-HEADWALL AND CONCRETE APRON

*Varies with fill slope and pipe cover.

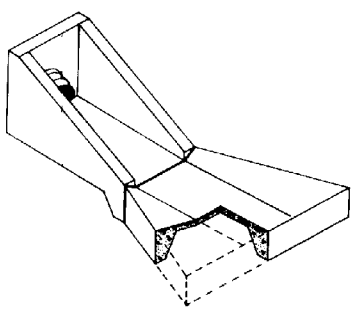

OUTLET DETAIL

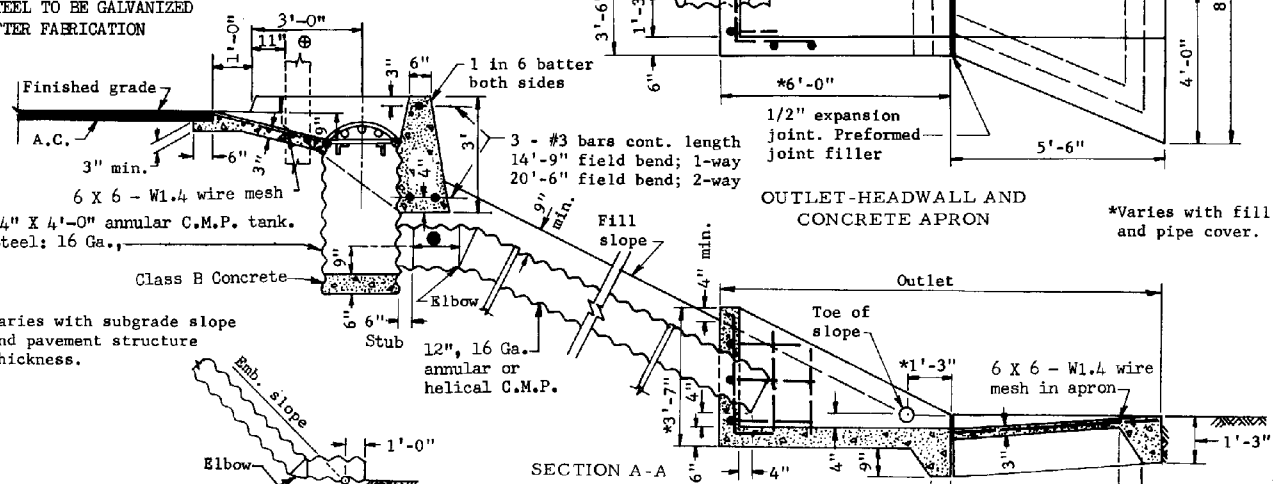

●Varies with subgrade slope and pavement structure thickness.

SECTION A-A

C.M.P. outlet on rock

DESIGN APPROVED	STATE OF ARIZONA DEPARTMENT OF TRANSPORTATION DIVISION OF HIGHWAYS STANDARD DRAWINGS	REV 1/83
APPROVED FOR DISTRIBUTION	DOWNDRAIN, EMBANKMENT	DRAWING NO. C-04.20

C-02.20 Slopes

C-02.10 Slopes

◑	Embankment Height 5'	6'	7'	8'	9'	10'	11'	12'	13'	14'	15'	16'	17'	18'	19'	20'	21'	22'	23'	24'	25'	26'	27'	28'	29'	30'	31'	32'
12"	32	37	43	49	50																							
13"	33	38	44			51																						
14"	34	39	45				52																					
15"	35	40	46					53																				
16"	36	41	47						54																			
17"	37	42	48							55																		
18"	38	43	49								56																	
19"	39	44	50									57																
20"	40	45	51										58															
21"	41	46	52											59														
22"	42	47	53												60													
23"	43	48	54													61												
24"	44	49	55														62											
25"																		63										
26"																			64									
27"																				65								
28"																					66							
29"																						67						
30"																							68					
31"																								69				
32"																									70			
33"																										71		
34"																											72	
35"																												
36"																												

C-02.30 Slopes

◑	Embankment Height 5'	6'	7'	8'	9'	10'	11'	12'	13'
12"									
13"	22								
14"									
15"		23							
16"									
17"			24						
18"									
19"				25					
20"									
21"									
22"				26					
23"					27				
24"									
25"						28			
26"									
27"									
28"						29			
29"									
30"									
31"						30			
32"							31		
33"									
34"								32	
35"									33
36"									

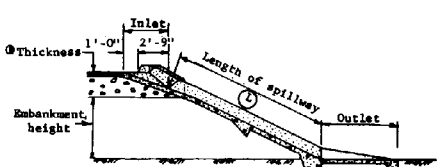

GENERAL NOTES

1. For C-02.10 slopes with embankment height over 24', L = L for embankment height from table + 2.24(emb. height - 24).
2. For C-02.20 slopes with embankment height over 32', L = L for 32' embankment height from table + 1.8(emb. height - 32).
3. For C-02.30 slopes with embankment height over 13', L = L for 13' embankment height from table + 1.8(emb. height - 13).

DESIGN APPROVED	STATE OF ARIZONA DEPARTMENT OF TRANSPORTATION DIVISION OF HIGHWAYS STANDARD DRAWINGS	REV. 1/83
APPROVED FOR DISTRIBUTION	SPILLWAY, EMBANKMENT LENGTH TABLE	DRAWING NO. C-04.30

C-02.20 Slopes

C-02.10 Slopes

◑	Embankment Height 10'	11'	12'	13'	14'	15'	16'	17'	18'	19'	20'	21'	22'	23'	24'	25'	26'	27'	28'	29'	30'	31'	32'
12"	38																						
13"		46																					
14"	40																						
15"			48																				
16"	34			50																			
17"																							
18"	42					52																	
19"																							
20"	36																						
21"							54																
22"	44																						
23"									56														
24"	38																						
25"											58												
26"	46																						
27"	40												60										
28"																							
29"															62								
30"	48																						
31"	42																64						
32"																							
33"																			66				
34"	50																				68		
35"	44																						
36"																							70

GENERAL NOTES

1. For C-02.10 slopes with embankment height over 24' , L = L for embankment height from table + 2.24(emb. height - 24).
2. For C-02.20 slopes with embankment height over 32', L = L for 32' embankment height from table + 1.8(emb. height - 32).
3. For C-02.30 slopes with embankment height over 13', L = L for 13' embankment height from table + 1.8(emb. height - 13).

C-02.30 Slopes

◑	Embankment Height 5'	6'	7'	8'	9'	10'	11'	12'	13'
12"									
13"	14								
14"		16							
15"									
16"									
17"			18						
18"									
19"	16								
20"									
21"									
22"									
23"			20						
24"									
25"	18								
26"									
27"									
28"			22						
29"									
30"	20								
31"									
32"									
33"			24						
34"	22								
35"									
36"				26					30

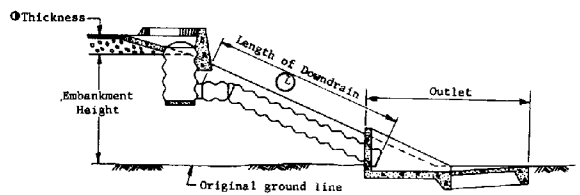

DESIGN APPROVED	STATE OF ARIZONA DEPARTMENT OF TRANSPORTATION DIVISION OF HIGHWAYS STANDARD DRAWINGS	REV. 1/83
APPROVED FOR DISTRIBUTION	DOWNDRAIN, EMBANKMENT, LENGTH TABLE	DRAWING NO. C-04.40

SINGLE CURB

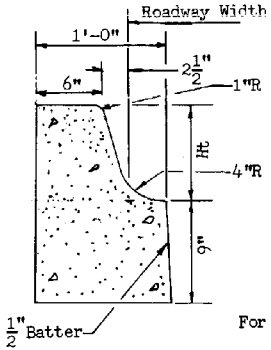

TYPE A
For 6" Curb Height Or Over

CURB & GUTTER

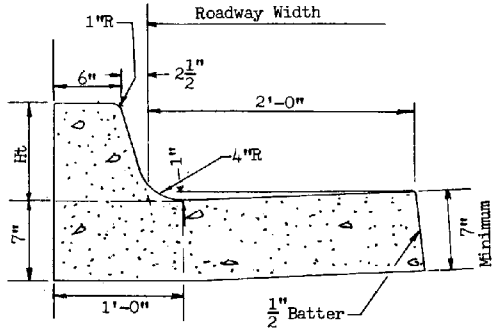

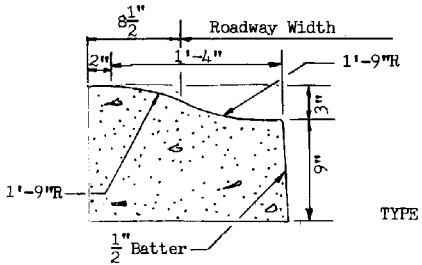

TYPE F

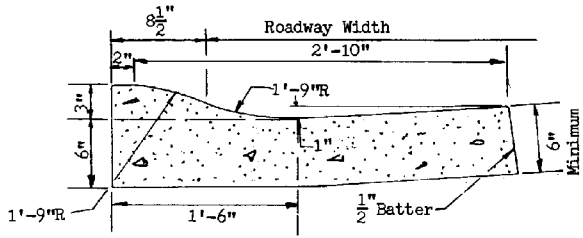

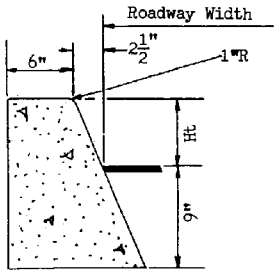

TYPE G

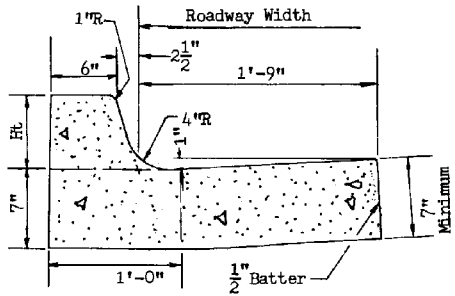

GENERAL NOTES:

SINGLE CURB, AND CURB AND GUTTER:

1. Single curb, and curb and gutter may be constructed by the use of forms or the concrete may be extruded.

2. When the roadway section slopes away from the gutter, the slope of the gutter shall match the roadway cross slope.

3. Two inch deep contraction joints shall be placed in the curb and the gutter at locations which match the joints in adjacent Portland cement concrete pavement and at approximate 15 foot centers when adjacent to asphaltic concrete pavement. Joints shall be either hand tooled or sawed.

4. One half inch thick expansion joints shall be located at tangent points in curb returns, at structures and at maximum 60 foot intervals. The $\frac{1}{2}$ inch joint filler shall extend the full depth of the concrete.

5. Concrete shall be finished with a steel trowel followed by brushing with a fine brush along the length of the curb and gutter.

6. All exposed edges and hand tooled joints shall be finished with a tool having a $\frac{1}{4}$ inch radius unless a larger radius is indicated.

EMBANKMENT CURB:

1. No additional finishing will be required after extrusion or removal of the forms when curb resents a neat appearance and the surface is uniform in texture and color.

2. The curb shall conform to the cross section as shown except that the horizontal dimensions shall not vary more than $\frac{1}{2}$ inch

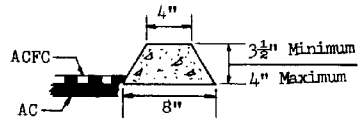

EMBANKMENT CURB

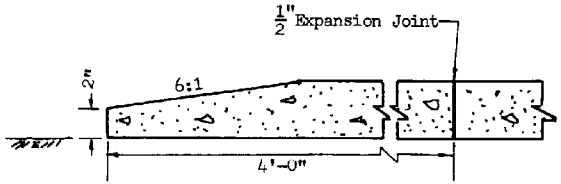

CURB TERMINAL SECTION

DESIGN APPROVED	STATE OF ARIZONA DEPARTMENT OF TRANSPORTATION DIVISION OF HIGHWAYS STANDARD DRAWINGS	REV. 1/83
APPROVED FOR DISTRIBUTION	SINGLE CURB, CURB & GUTTER EMBANKMENT CURB	DRAWING NO. C-05.10

GENERAL NOTES:

1. Unless otherwise specified, sidewalks shall be 4 inches in depth and driveways shall be 6 inches in depth.

2. One inch deep transverse contraction joints shall be placed in sidewalks at intervals of approximately 5 feet. If the sidewalk is over 7 feet in width, a 1 inch deep longitudinal contraction joint shall be placed in the center of the sidewalk. The maximum area of sidewalk without contraction joints shall be approximately 36 square feet. Contraction joints in driveways shall be 1 inch in depth. Joints shall be either formed or sawed. Formed joints shall be finished with a tool having a ½ inch radius.

3. One half inch expansion joints shall be located between sidewalks or driveways and all abutting structures. Maximum length of sidewalk without expansion joint shall be 60 feet. The ½ inch joint filler shall extend the full depth of the concrete.

4. Concrete shall be finished by means of a float, then steel trowelled, and then broomed with a fine brush in a transverse direction.

Driveway

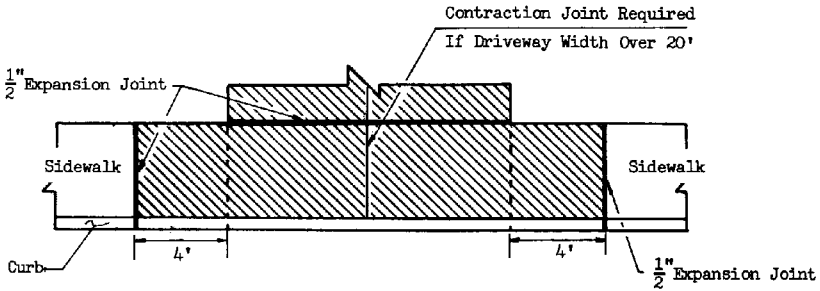

DRIVEWAY WITH SIDEWALK ADJACENT TO CURB

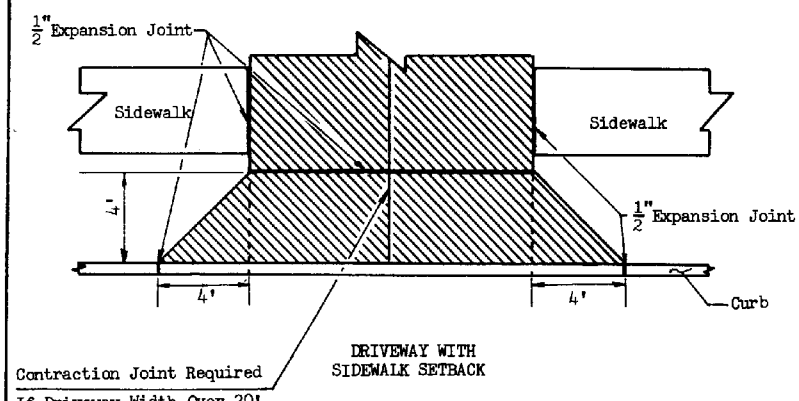

DRIVEWAY WITH SIDEWALK SETBACK

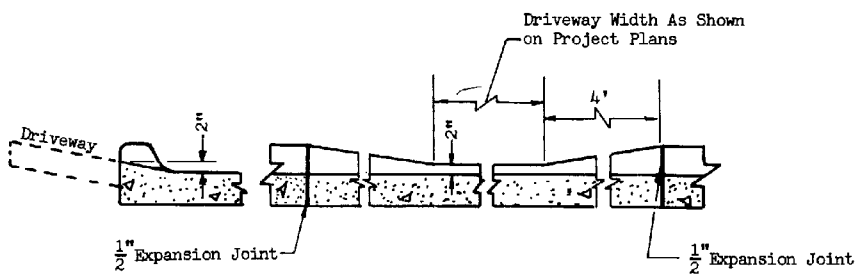

DEPRESSED CURB AT DRIVEWAY ENTRANCE

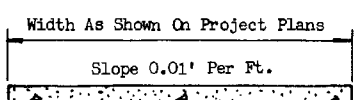

DRIVEWAY

CONCRETE SIDEWALK

DESIGN APPROVED	STATE OF ARIZONA DEPARTMENT OF TRANSPORTATION DIVISION OF HIGHWAYS STANDARD DRAWINGS	REV. 1/83
APPROVED FOR DISTRIB. ON	CONCRETE SIDEWALK & DRIVEWAY	DRAWING NO. C-05.20

**See proper city or county regulation.

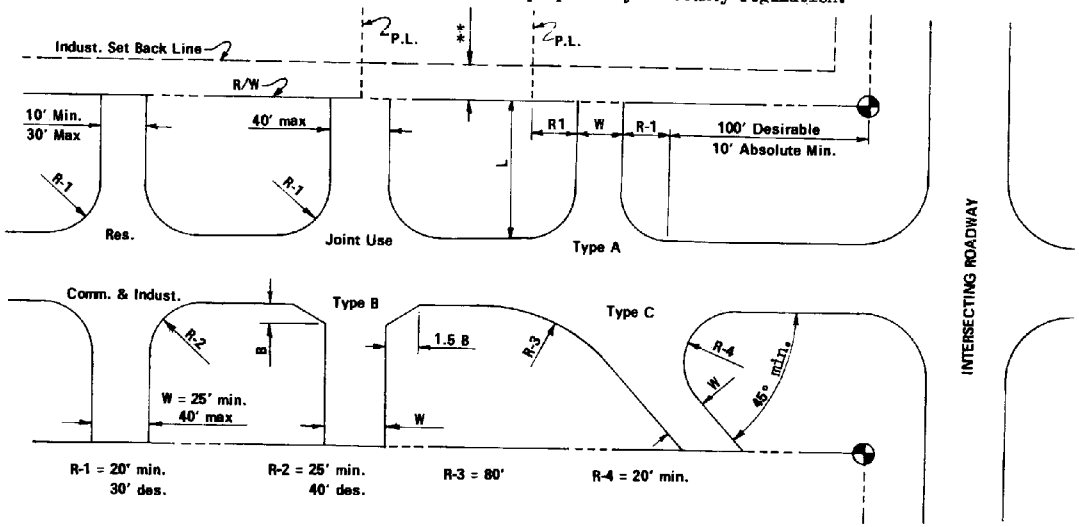

RURAL DEVELOPMENTS

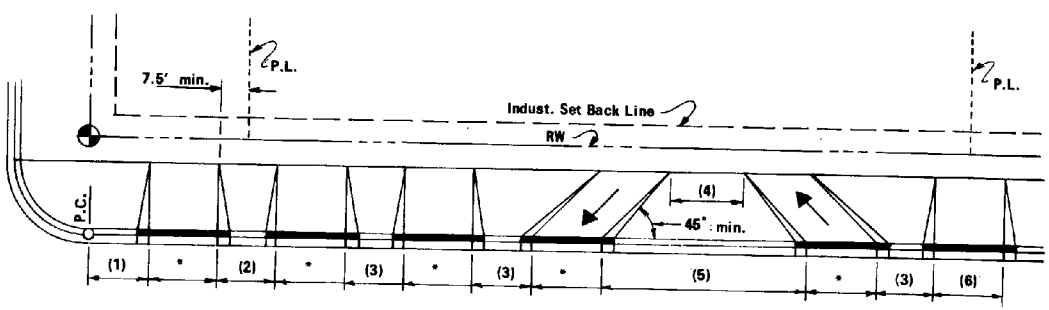

(1) 10' min., 20' des.
(2) 15' min.
(3) 25' min., 40' des.
(4) 40' min.

(5) One way couplet for use only on one way roadways.
(6) 40' max. joint use d'way

* Residential: 10' min., 30' max.
Commercial:
One way, 15' min., 30' max.
Two way, 25' min., 40' max.
Industrial: 20' min., 40' max.

URBAN DEVELOPMENTS.

GENERAL NOTES

Paved Turnouts: Plans notation will be WxL, surface material, type and standard. Example: 20' X 30' A.C.T.O., Type A, Standard C-06.10 Show R graphically.

Base material shall be the same as what shown for main roadway, unless otherwise noted.

Excavation or embankment for turnouts shall be included in quantities for main roadways.

Dimensions indicated as minimum shall be avoided whenever possible in favor of those indicated as desirable.

Driveways and depressed curbs shall be located as noted on plans or as directed by the Engineer.

The Type 'A' turnout is the preferable turnout design. Type 'B' and 'C' shall only be used when absolutely necessary.

Driveway Types:

Residential - one providing access to a single family residence, to a duplex, or to an apartment building containing five or fewer dwelling units.

Commercial - one providing access to an office, retail or institutional building or to an apartment building having more than five dwelling units.

Industrial - one directly serving a substantial number of truck movements to and from loading docks of an industrial facility, warehouse or truck terminal.

Driveways for high volume traffic generators shall be approved individually by Traffic Engineering Section.

Driveways with curb returns in urban areas shall be installed only with the approval of Traffic Engineering Section.

Joint Use Driveways - it may become desirable for landowners of adjacent properties to require a joint driveway to service both properties. If this is the case, only one of the two adjacent landowners need apply for the access permit, but a notorized written mutual agreement, signed by all parties involved, must accompany the application form.

Construction of curb, gutter and sidewalk in urban areas by the permitee, along that portion of the highway frontage under permit application, may be a stipulation of the permit approval if there appears to be reasonable need.

Drainage structures shall be provided under driveways where necessary.

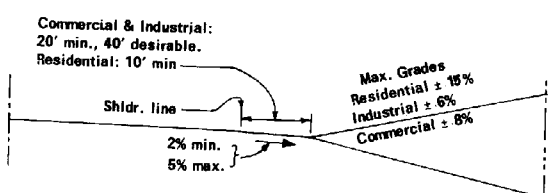

RURAL CROSS SECTION

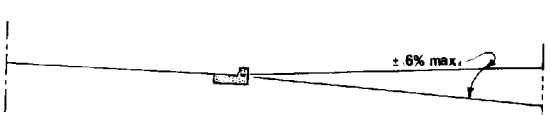

URBAN CROSS SECTION

DESIGN APPROVED	STATE OF ARIZONA DEPARTMENT OF TRANSPORTATION DIVISION OF HIGHWAYS STANDARD DRAWINGS	REV. 1/83
APPROVED FOR DISTRIBUTION	TURNOUT & DRIVEWAY LAYOUT	DRAWING NO. C-06.10

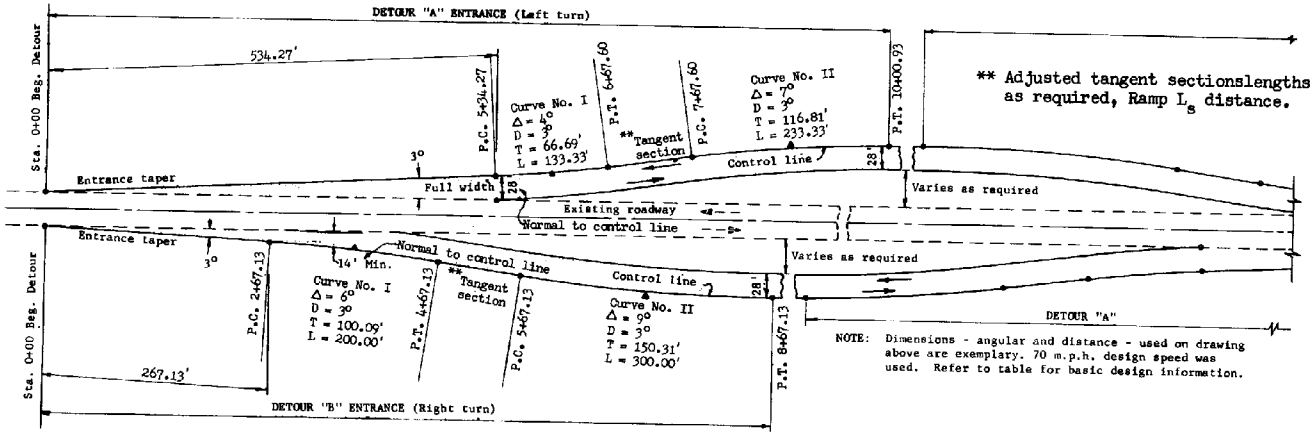

NOTE: Dimensions - angular and distance - used on drawing above are exemplary. 70 m.p.h. design speed was used. Refer to table for basic design information.

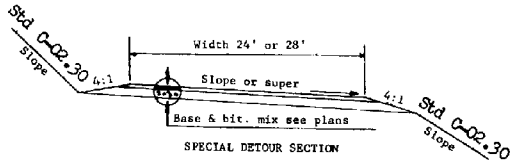

SPECIAL DETOUR SECTION

Tangent Roadway		Curved Roadway		
Entrance Design Speed	Entr. Taper Def'l. Angle	Exist. Horiz. Curve	Detour "A" Take off Curve	Detour "B" Take off Curve
70	3°	1°	2°	2°30'
60	3°	2°	3°	3°30'
50	4°	3°	4°	5°
40	6°	4°	5°	6°
30	10°	5°	6°	7°
		6°	7°	8°
		7°	8°	9°
		8	9°	10°

Entrance Design Speed	Max. Horizontal Curvature			
	Curve No. I		Curve No. II*	
	D	Superelev.	D	Superelev.
70	3°	.09'/ft.	3°	.06'/ft.
60	3°	.08'/ft.	4°	.05'/ft.
50	4°	.07'/ft.	6°	.05'/ft.
40	6°	.07'/ft.	10°	.05'/ft.
30	10°	.07'/ft.	19°	.05'/ft.

*Curve No. II superelevations are for a design speed 20 mph less than entrance speed.

GENERAL NOTES

Detour "A" entrance shall be used where approaching vehicle must turn left. Detour "B" shall be used where approaching vehicle must turn right.

Detour from a horizontal curve: On the inside of the curve the detour take off shall be a curve, see table. On the outside a tangent take off shall be used. A vertical curve may be required to effect a smooth grade change.

The design speed shall be comparable between vertical and horizontal alignment.

The entrance design speed of a detour shall not be less than the normal posted speed of the existing roadway. The design speed for the remainder of the detour may be 20 m.p.h. less than the normal posted speed.

Any intermediate detour entrance may be designed on the basis of normal posted speed less 20 m.p.h. where visible construction activity has slowed traffic for the preceding 1/4 mile.

The minimum width of the detour shall be 28' for existing roadways 34' or wider and a minimum of 24' for existing roadways less than 34' in width.

The entrance taper for Detour "A" shall be extended until full detour width is attained. For Detour "B" the entrance taper shall be extended until a minimum of 14' is attained beyond the edge of existing roadway.

Any deviation from this standard must be approved by the Plans Engineer and Traffic Engineer and the Engineer shall submit the alignment and profile of the proposed change for their review.

Native material used in constructing the detour embankment will be considered suitable for backfill around pipe; however, it shall be reasonably free of rocks and debris

DESIGN APPROVED

APPROVED FOR DISTRIBUTION

STATE OF ARIZONA
DEPARTMENT OF TRANSPORTATION
DIVISION OF HIGHWAYS
STANDARD DRAWINGS

REV. 1/93

GEOMETRICS, DETOUR

DRAWING NO. C-6.20

S indicates sawed contraction control joint
CN indicates construction joint
LL indicates longitudinal joint
See Std. C-07.20 ▲

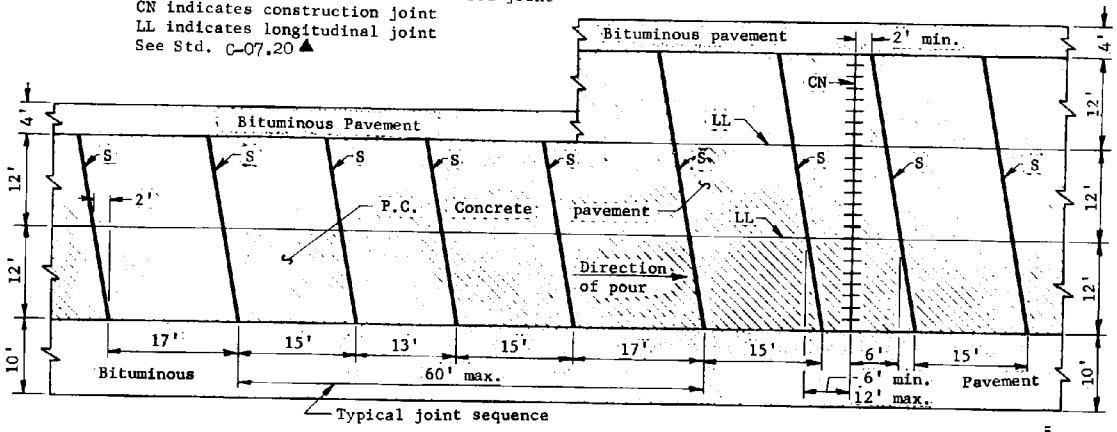

PLAN
See General Notes

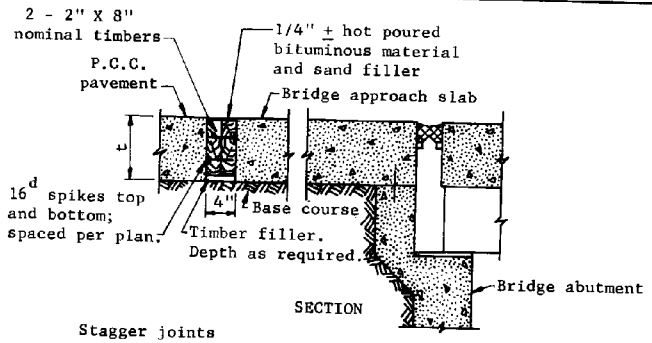

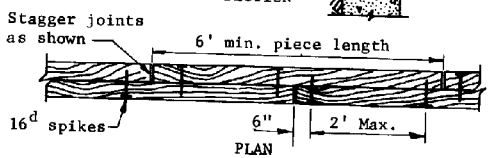

TRANSVERSE EXPANSION JOINT AT BRIDGE APPROACH SLAB

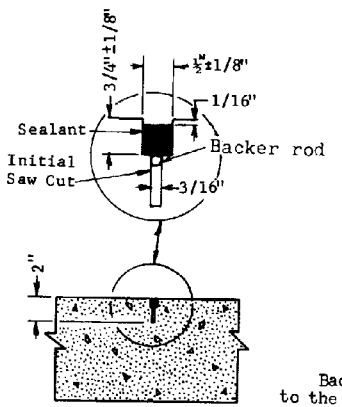

SAWED TYPE S
CONTRACTION CONTROL JOINT

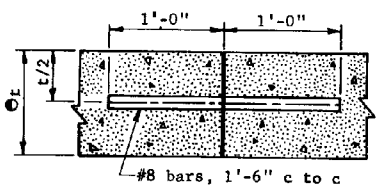

t Indicates P.C.C. thickness

CONSTRUCTION JOINT CN
To be used at end of pour

GENERAL NOTES

All transverse joints shall be in line with joints in adjacent slabs.

At intersection of side roads or streets, joints shall be placed to give the intersection a symmetrical appearance while conforming to the cross section of the intersecting road or street.

Timbers used in transverse expansion joint shall be rough redwood and conform to commercial grade.

Backer Rod - (Expanded cellular rubber) Shall conform to the requirements of ASTM D 1056 Grade # SEE 41.

DESIGN APPROVED	STATE OF ARIZONA DEPARTMENT OF TRANSPORTATION DIVISION OF HIGHWAYS STANDARD DRAWINGS	REV 11/83
APPROVED FOR DISTRIBUTION	PAVEMENT, CONCRETE, TRANSVERSE JOINTS	DRAWING NO C-07.10

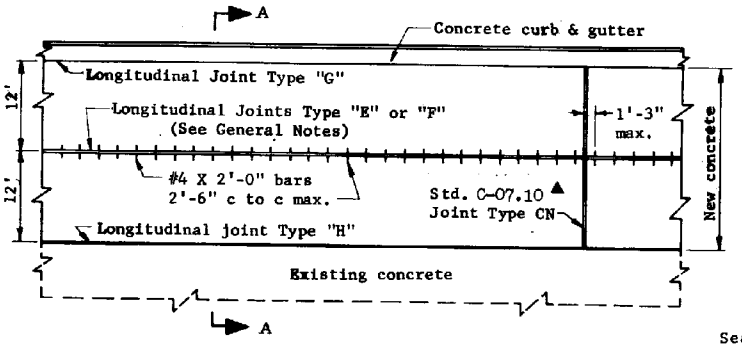

PLAN

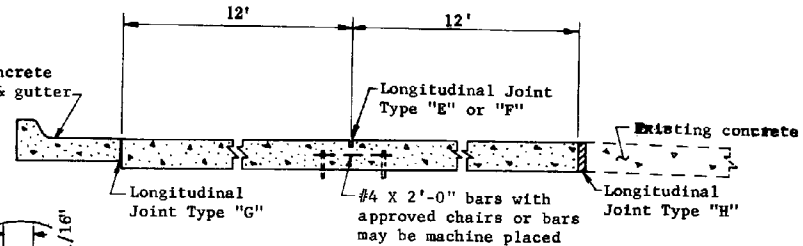

SECTION A-A

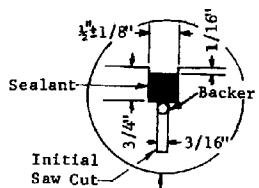

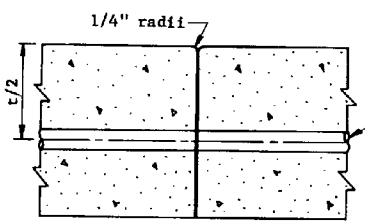

JOINT TYPE "E"
CONSTRUCTION JOINT

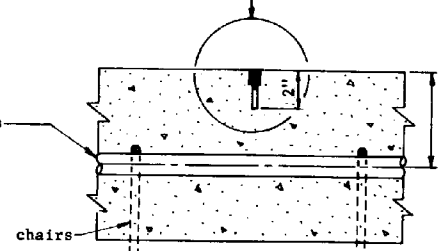

JOINT TYPE "F"
CONSTRUCTION JOINT

Note:
"t" indicates
pavement thickness

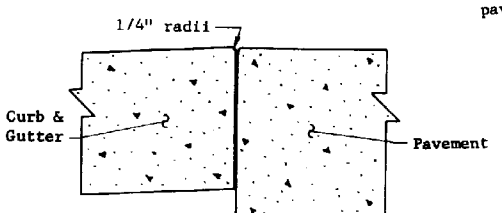

JOINT TYPE "G"

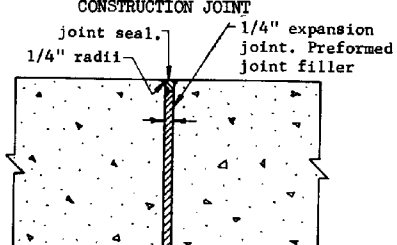

JOINT TYPE "H"
EXPANSION JOINT

LONGITUDINAL JOINT DETAILS

GENERAL NOTES

In slip form type pavement construction, Longitudinal Joint Type "F" shall be used. In fixed form type construction either Longitudinal Joint Type "E or "F" may be used.

Backer Rod - (Expanded cellular rubber) Shall conform to the requirements of ASTM D 1056 Grade # SHE 41.

DESIGN APPROVED	STATE OF ARIZONA DEPARTMENT OF TRANSPORTATION DIVISION OF HIGHWAYS STANDARD DRAWINGS	REV. 11/83
APPROVED FOR DISTRIBUTION	PAVEMENT, CONCRETE, LONGITUDINAL JOINTS	DRAWING NO. C-07.20

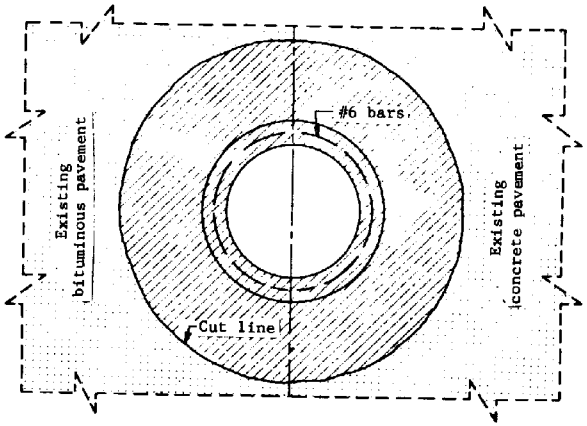

PLAN

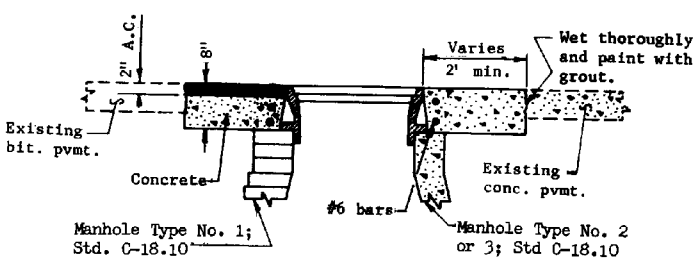

SECTION

PAVEMENT CUT REPLACEMENT FOR MANHOLE

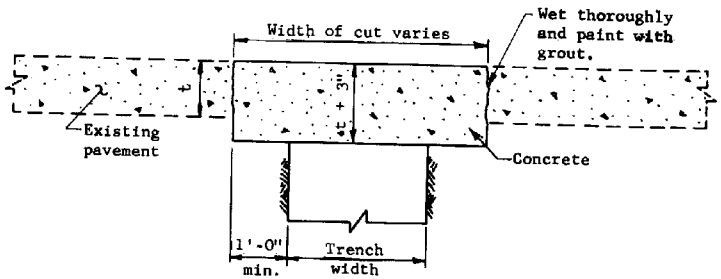

CUT IN CONCRETE PAVEMENT

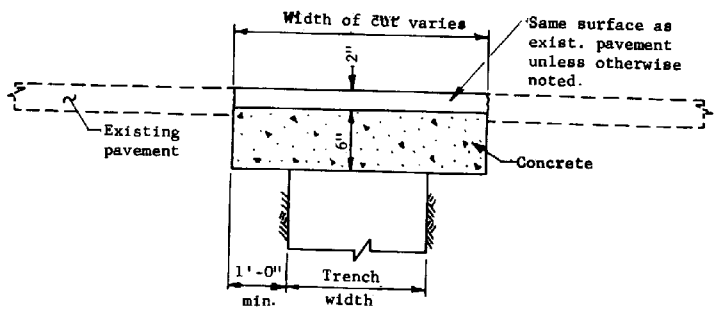

CUT IN BITUMINOUS PAVEMENT

GENERAL NOTES

All concrete shall be Class S, 2000 lbs. psi

DESIGN APPROVED	STATE OF ARIZONA DEPARTMENT OF TRANSPORTATION DIVISION OF HIGHWAYS STANDARD DRAWINGS	REV 1/83
APPROVED FOR DISTRIBUTION	PAVEMENT, CUT & REPLACEMENT	DRAWING NO. C-07.30

GENERAL NOTES

1. For ramp cross section details, see Std. C-8.20.
2. For gore area paving details, see Std. C-8.20.
3. Shaded areas indicate differential shoulder delineation.
4. Parallel deceleration is to be used only under special conditions necessitating ramp curvature ahead of nose.

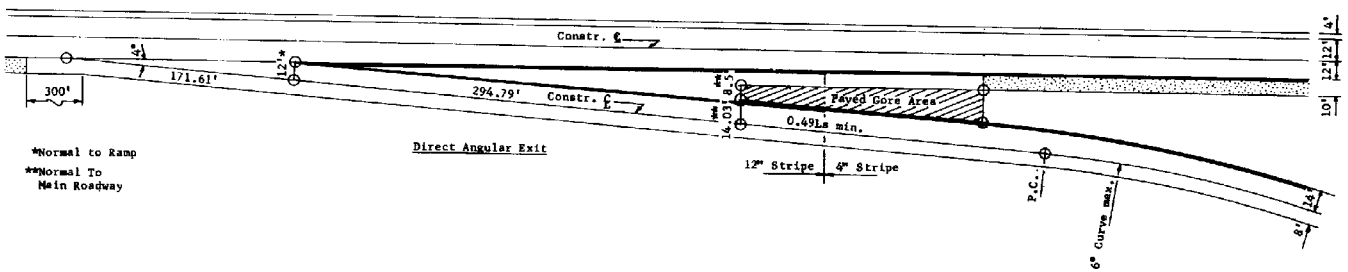

*Normal to Ramp
**Normal To Main Roadway

Direct Angular Exit

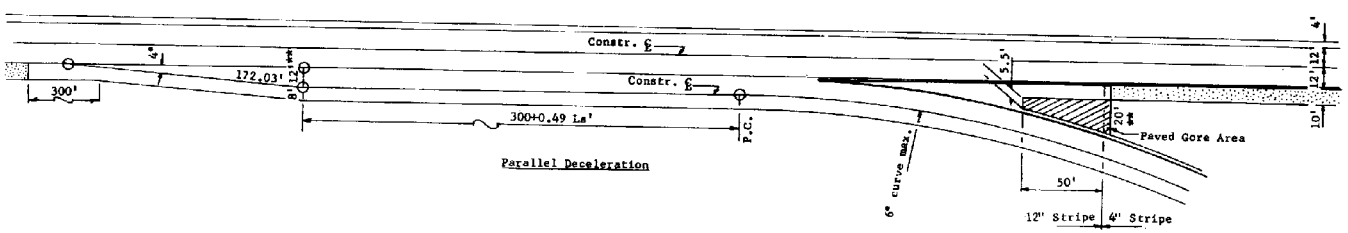

Parallel Deceleration

DESIGN APPROVED	STATE OF ARIZONA DEPARTMENT OF TRANSPORTATION DIVISION OF HIGHWAYS STANDARD DRAWINGS	REV. 1/83
APPROVED FOR DISTRIBUTION	GEOMETRICS, EXIT RAMP	DRAWING NO. C-8.10

GENERAL NOTES

1. The 50:1 taper and corresponding offsets shall also apply when the main roadway has curvature or combined tangent and curvature.

2. Gore area paving joints and scores shall be edged with a ¼" R. tool.

3. Shaded areas indicate differential shoulder delineation.

4. Min. nose paving length shall be that required to attain a width of 20'.

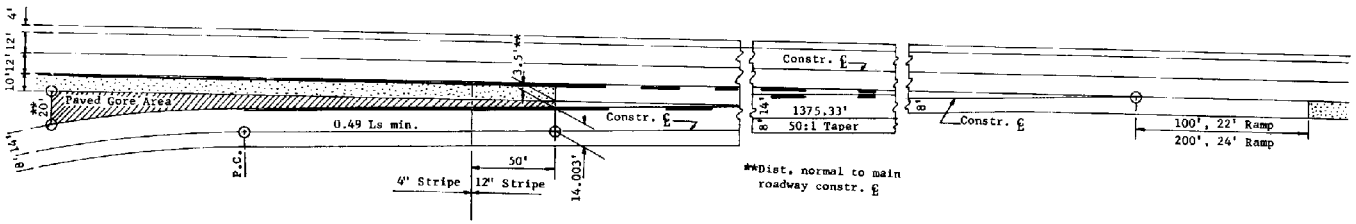

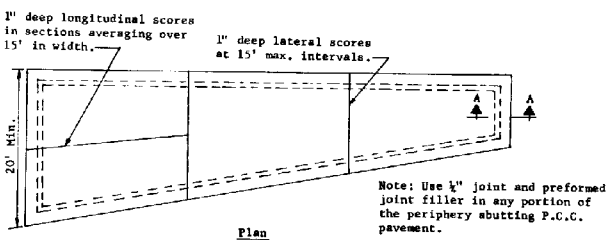

Plan

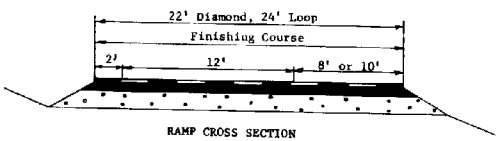

RAMP CROSS SECTION

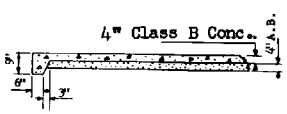

Section A-A

GORE AREA PAVING

DESIGN APPROVED	STATE OF ARIZONA DEPARTMENT OF TRANSPORTATION DIVISION OF HIGHWAYS STANDARD DRAWINGS	REV. 1/83
APPROVED FOR DISTRIBUTION	GEOMETRICS, ENTRANCE RAMP	DRAWING NO. C-8.20

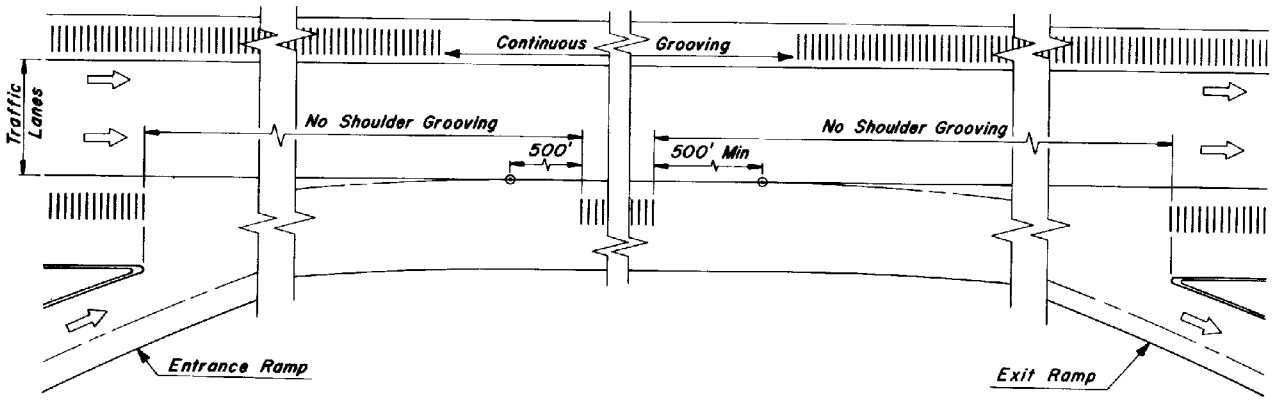

PLAN

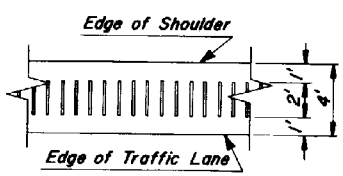

LEFT SHOULDER-DIVIDED ROADWAY

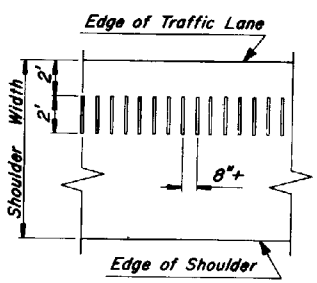

RIGHT SHOULDER-DIVIDED ROADWAY
BOTH SHOULDERS-UNDIVIDED ROADWAY

SHOULDER GROOVING DETAIL

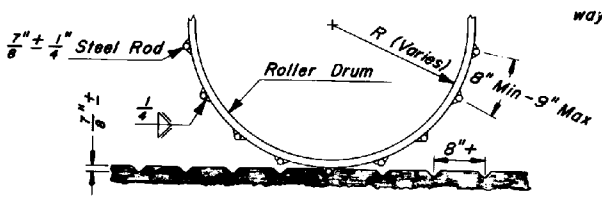

STEEL DRUM DETAIL

GENERAL NOTES

Where shown on the plans rumble strips shall be constructed on the highway shoulders by making indentations approximately $\frac{7}{8}$" deep in the asphalt concrete surfacing.

The indentations shall be formed by rolling the asphalt concrete while still hot with a roller to which segments of $\frac{7}{8}" \pm \frac{1}{4}"$ steel rods have been welded to the drum.

The rod segments shall be 2' long and be fully welded to the roller drum at approximately 8" centers.

Each roller shall be equipped with an acceptable guide that extends in front of the roller and is clearly visible to the operator in order that proper alignment of the completed scored shoulder is obtained.

Use on interstate and primary roadways 40' and wider.

DESIGN APPROVED APPROVED FOR DISTRIBUTION	STATE OF ARIZONA DEPARTMENT OF TRANSPORTATION DIVISION OF HIGHWAYS STANDARD DRAWINGS	REV. 1/83
	GROOVING FOR BITUMINOUS SHOULDERS	DRAWING NO. C-9.10

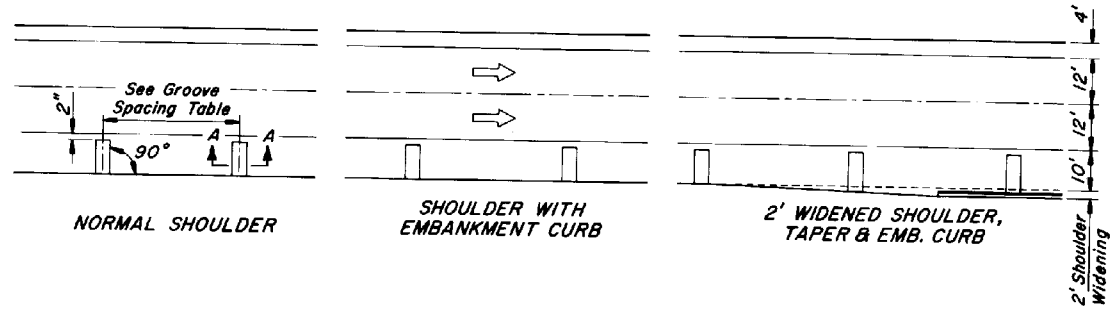

NORMAL SHOULDER

SHOULDER WITH EMBANKMENT CURB

2' WIDENED SHOULDER, TAPER & EMB. CURB

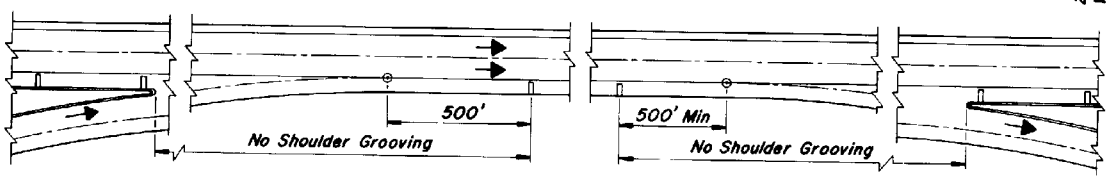

ENTRANCE RAMP

EXIT RAMP

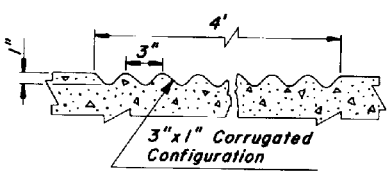

SECTION A-A

GROOVE SPACING	
Design Speed Per Plans M.P.H.	Spacing Ft.
80	60
70	50
60	45
55	40
50	35
40	30

GENERAL NOTES

1. Grooves in curbed shoulders shall terminate at the face of the single curb or at the edge of the gutter.

2. Grooves shall extend through pavement edge of shoulders with no curb.

DESIGN APPROVED	STATE OF ARIZONA DEPARTMENT OF TRANSPORTATION DIVISION OF HIGHWAYS STANDARD DRAWINGS	REV. 1/83
APPROVED FOR DISTRIBUTION	GROOVING FOR CONCRETE SHOULDERS	DRAWING NO. C-9.20

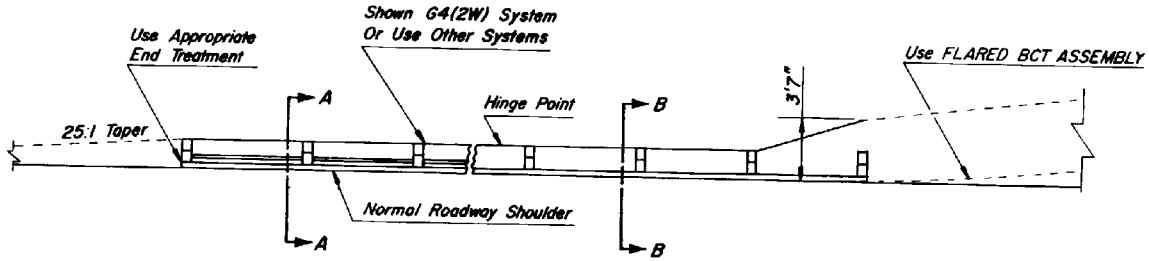

PLAN

GENERAL NOTES

All embankment curb shall be protected by guard rail.

Guard rail, exclusive of flares, shall not begin or end within embankment curb.

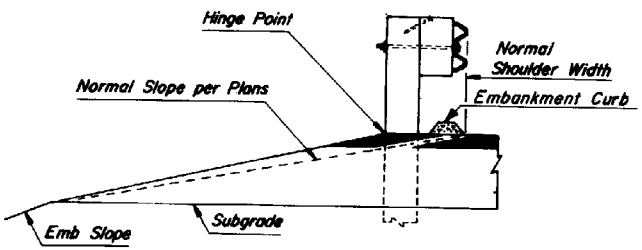

With Embankment Curb

SECTION A-A

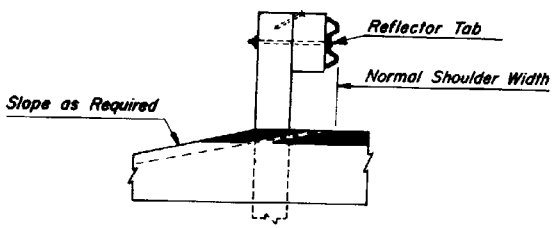

Without Embankment Curb

SECTION B-B

TYPE A GUARD RAIL INSTALLATION

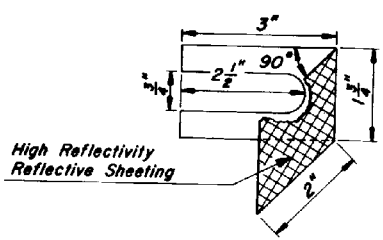

REFLECTOR TAB DETAIL

DESIGN APPROVED	STATE OF ARIZONA DEPARTMENT OF TRANSPORTATION DIVISION OF HIGHWAYS STANDARD DRAWINGS	REV 1/83
APPROVED FOR DISTRIBUTION	TYPE A GUARD RAIL INSTALLATION, REFLECTOR TAB.	DRAWING No. C-10.01

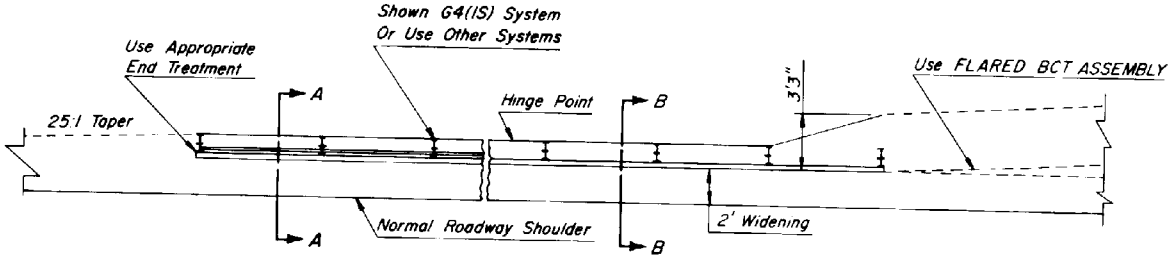

PLAN

GENERAL NOTES

All embankment curb shall be protected by guard rail.

Guard rail, exclusive of flares, shall not begin or end within embankment curb.

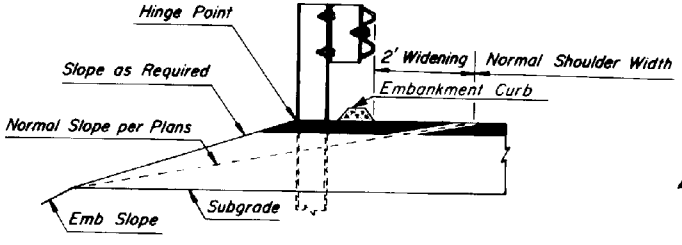

With Embankment Curb

SECTION A-A

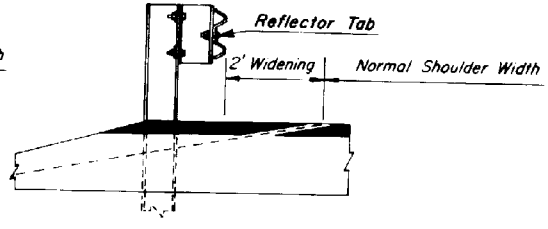

Without Embankment Curb

SECTION B-B

TYPE B GUARD RAIL INSTALLATION

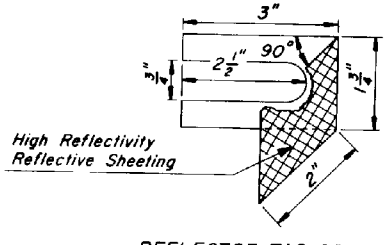

REFLECTOR TAB DETAIL

DESIGN APPROVED	STATE OF ARIZONA DEPARTMENT OF TRANSPORTATION DIVISION OF HIGHWAYS STANDARD DRAWINGS	REV. 1/83
APPROVED FOR DISTRIBUTION	TYPE B GUARD RAIL INSTALLATION, REFLECTOR TAB	DRAWING No. C-10.02

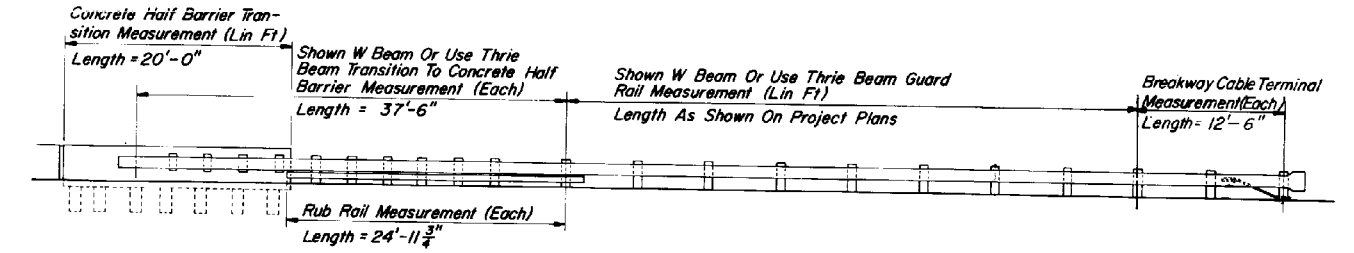

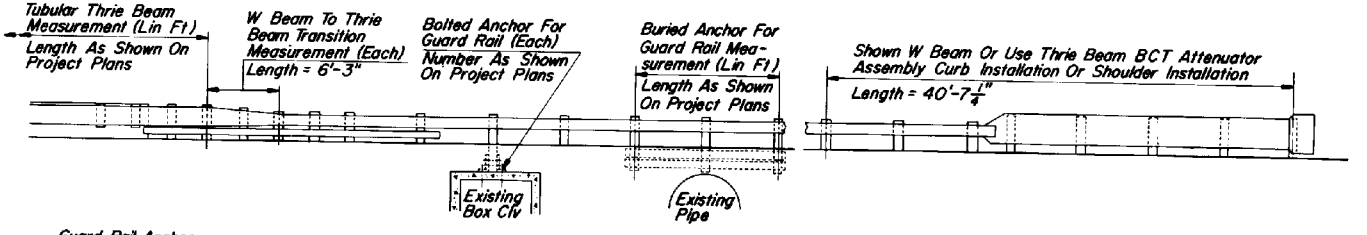

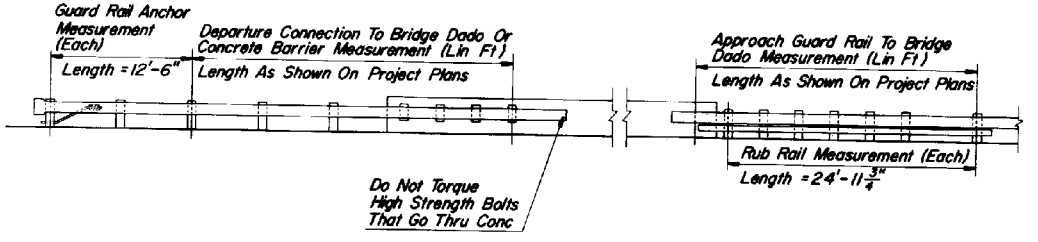

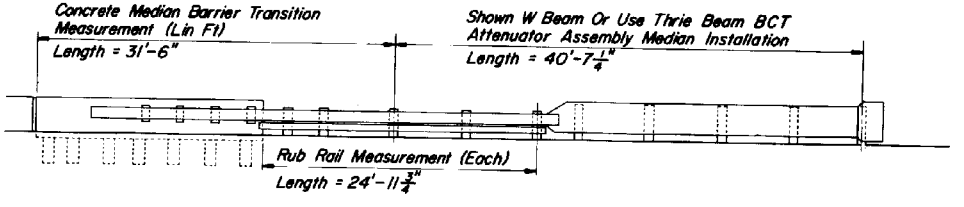

GENERAL NOTES

Length shall be as shown unless otherwise indicated on the project plans.

DESIGN APPROVED	STATE OF ARIZONA DEPARTMENT OF TRANSPORTATION DIVISION OF HIGHWAYS STANDARD DRAWINGS	REV. 7/05
APPROVED FOR DISTRIBUTION	MEASUREMENT LIMITS FOR W BEAM AND THRIE BEAM SYSTEM	DRAWING NO. C-10.03

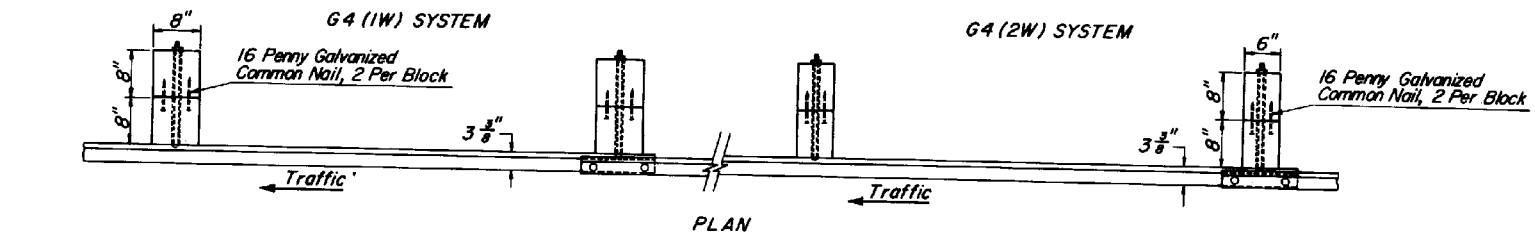

PLAN

GENERAL NOTES

● -Indicates ARTBA designation.

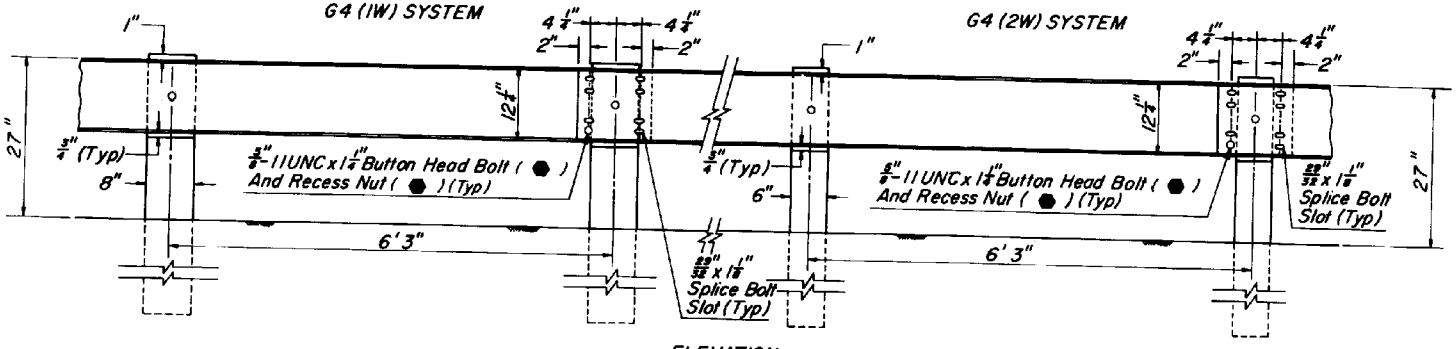

ELEVATION

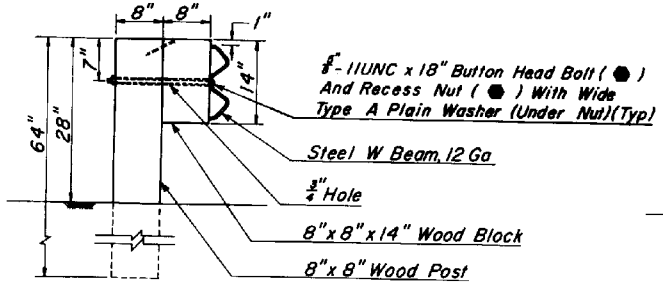

SECTION G4(1W)

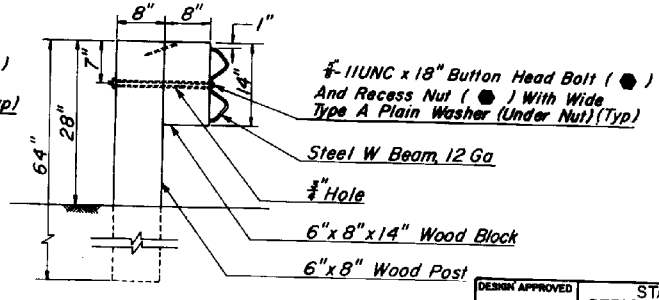

SECTION G4(2W)

DESIGN APPROVED	STATE OF ARIZONA DEPARTMENT OF TRANSPORTATION DIVISION OF HIGHWAYS STANDARD DRAWINGS	REV 7/85
APPROVED FOR DISTRIBUTION	G4(1W) AND G4(2W) BLOCKED OUT W BEAM (TIMBER POST)	DRAWING No. C-10.04

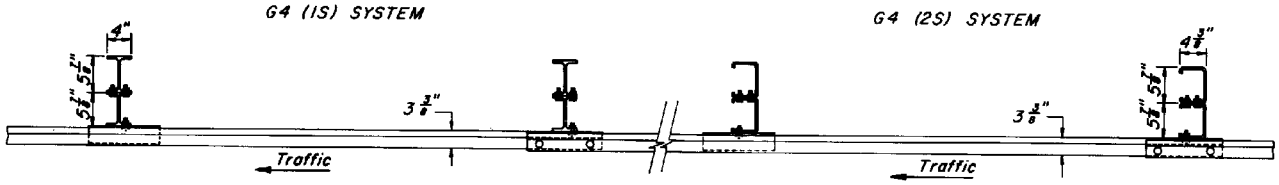

PLAN

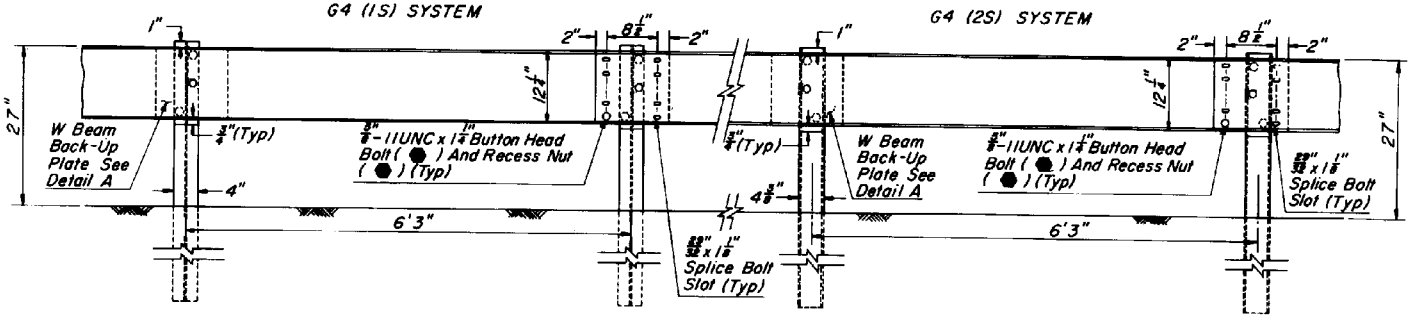

ELEVATION

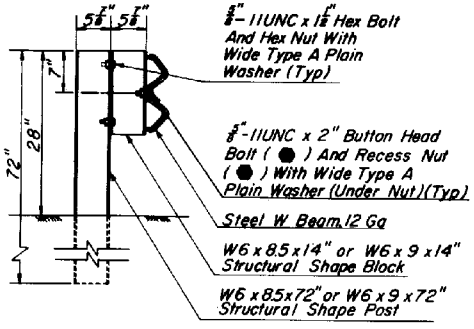

SECTION G4(1S)
WITHOUT CURB

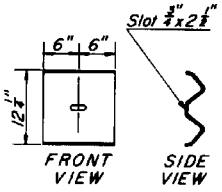

DETAIL A
(W BEAM BACK-UP PLATE)

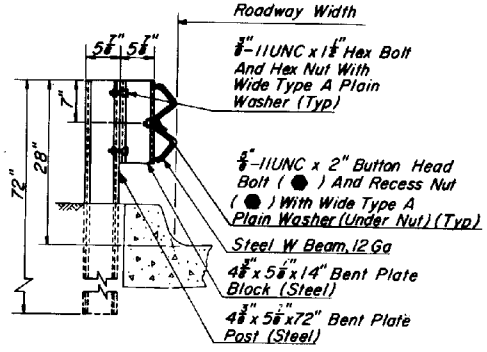

SECTION G4(2S)
WITH CURB

GENERAL NOTES

● - Indicates ARTBA designation.

DESIGN APPROVED	STATE OF ARIZONA DEPARTMENT OF TRANSPORTATION DIVISION OF HIGHWAYS STANDARD DRAWINGS	REV. 7/85
APPROVED FOR DISTRIBUTION	G4 (1S) AND G4 (2S) BLOCKED OUT W BEAM (STEEL POST)	DRAWING No. C-10.05

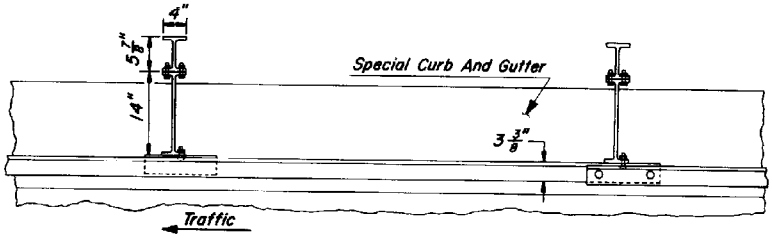

PLAN

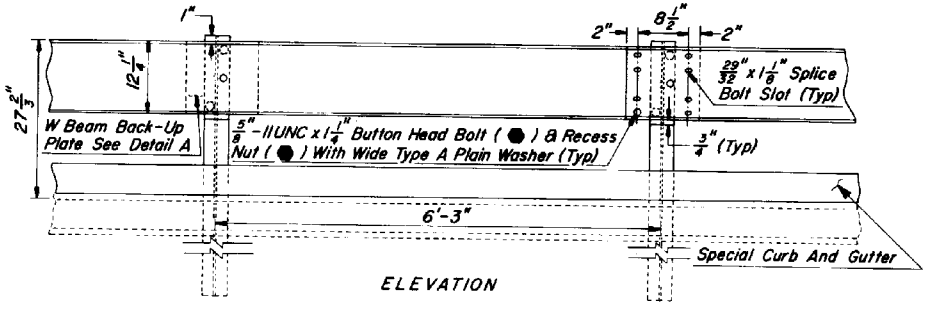

ELEVATION

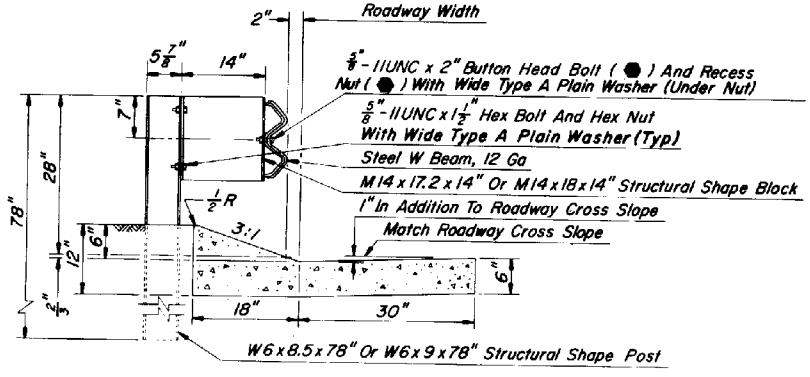

SECTION

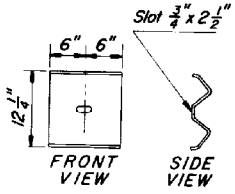

DETAIL A
(W BEAM BACK-UP PLATE)

GENERAL NOTES

● - Indicates ARTBA designation.

DESIGN APPROVED	STATE OF ARIZONA DEPARTMENT OF TRANSPORTATION DIVISION OF HIGHWAYS STANDARD DRAWINGS	REV. 7/85
APPROVED FOR DISTRIBUTION	G4(IS-MODIFIED) BLOCKED OUT W BEAM (STEEL POST) WITH SPECIAL CURB AND GUTTER	DRAWING NO. C-10.06

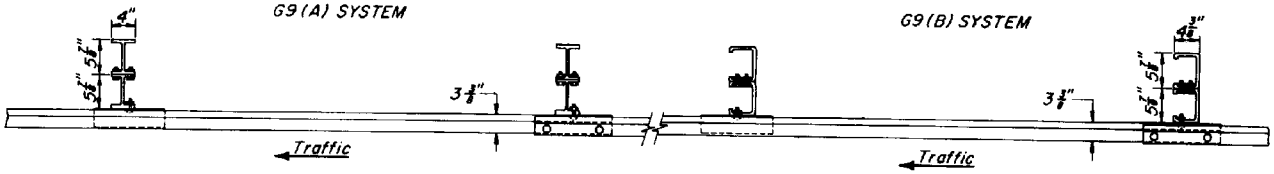

PLAN

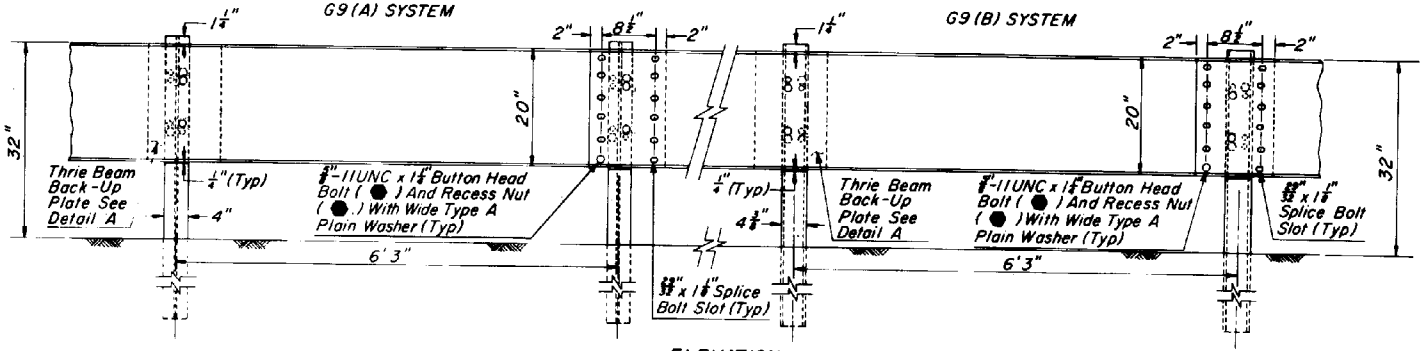

ELEVATION

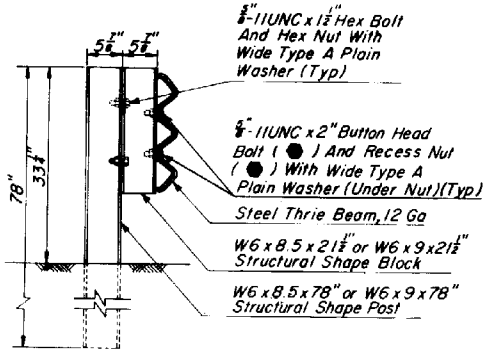

SECTION G9(A)

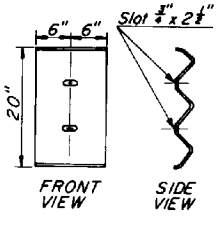

DETAIL A
(THRIE BEAM BACK-UP PLATE)

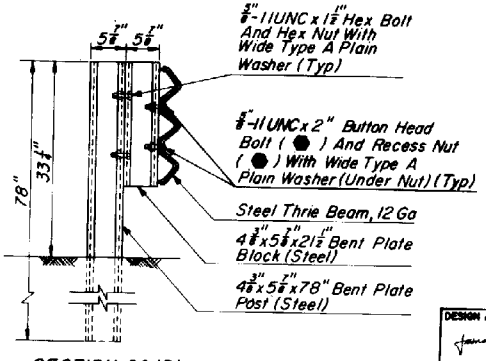

SECTION G9(B)

GENERAL NOTES

● –Indicates ARTBA designation.

DESIGN APPROVED	STATE OF ARIZONA DEPARTMENT OF TRANSPORTATION DIVISION OF HIGHWAYS STANDARD DRAWINGS	REV. 7/85
APPROVED FOR DISTRIBUTION	G9(A) AND G9(B) BLOCKED OUT THRIE BEAM (STEEL POST)	DRAWING No. C-10.07

G9(C) SYSTEM

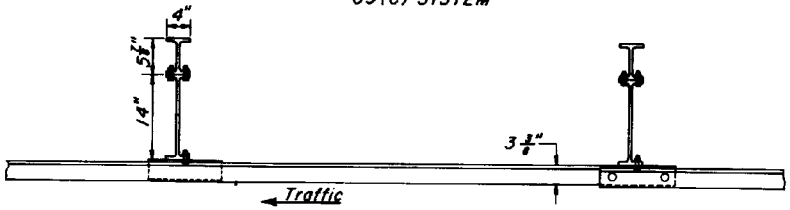

PLAN

G9(C) SYSTEM

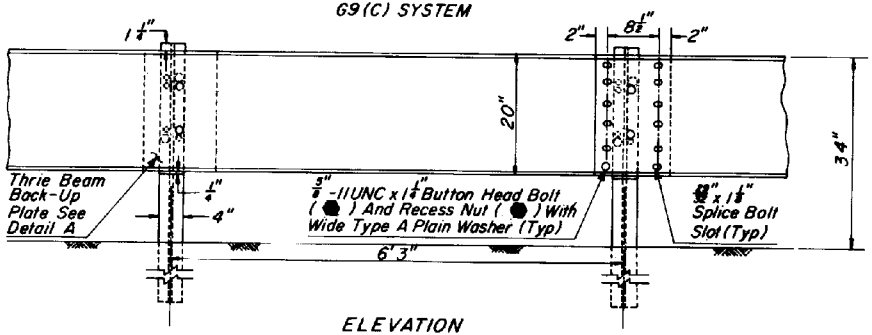

ELEVATION

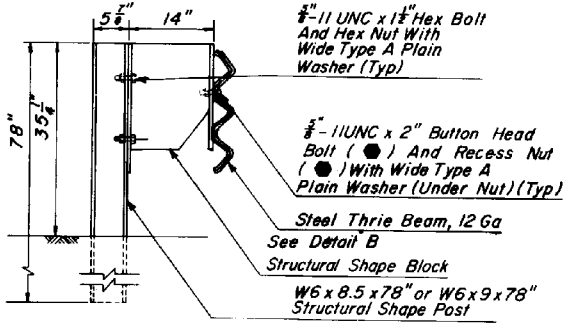

SECTION G9(C)

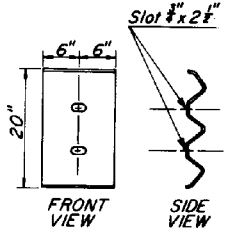

DETAIL A
(THRIE BEAM
BACK-UP PLATE)

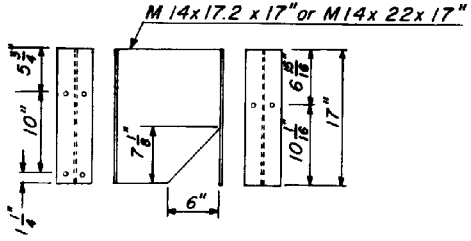

DETAIL B
(MODIFIED STRUCTURAL
SHAPE BLOCK)

GENERAL NOTES

⬢-Indicates ARTBA designation.

DESIGN APPROVED	STATE OF ARIZONA DEPARTMENT OF TRANSPORTATION DIVISION OF HIGHWAYS STANDARD DRAWINGS	REV 7/85
APPROVED FOR DISTRIBUTION	G9 (C) BLOCKED OUT THRIE BEAM (STEEL POST)	DRAWING No. C-10.08

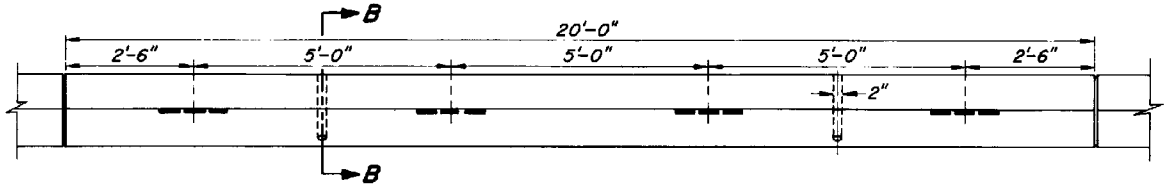

PLAN

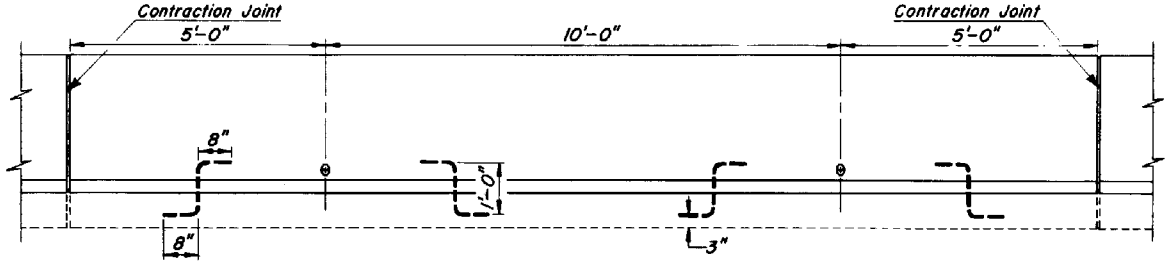

ELEVATION

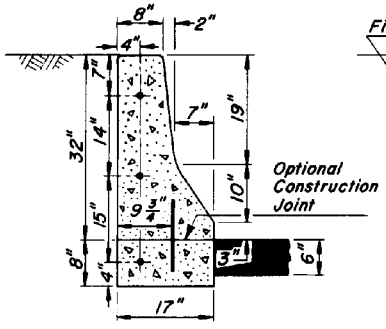

SECTION A-A

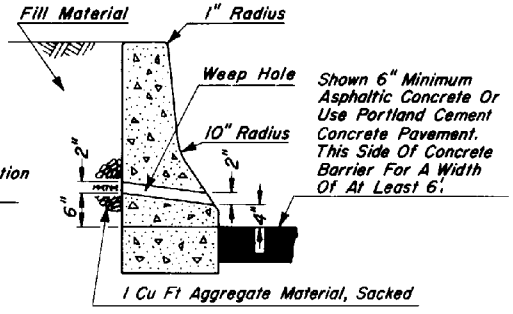

SECTION B-B

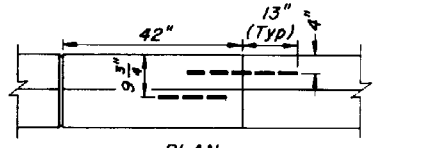

PLAN

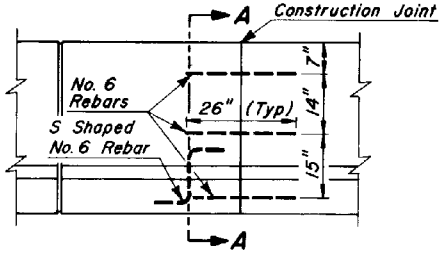

ELEVATION

CONSTRUCTION JOINT DETAIL

DESIGN APPROVED	STATE OF ARIZONA DEPARTMENT OF TRANSPORTATION DIVISION OF HIGHWAYS STANDARD DRAWINGS	REV. 1/83
APPROVED FOR DISTRIBUTION	HALF BARRIER, CAST IN PLACE, SLIP FORM	DRAWING NO. C-10.09

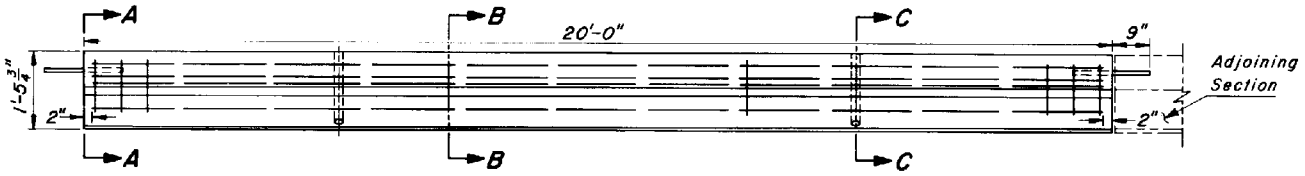

PLAN

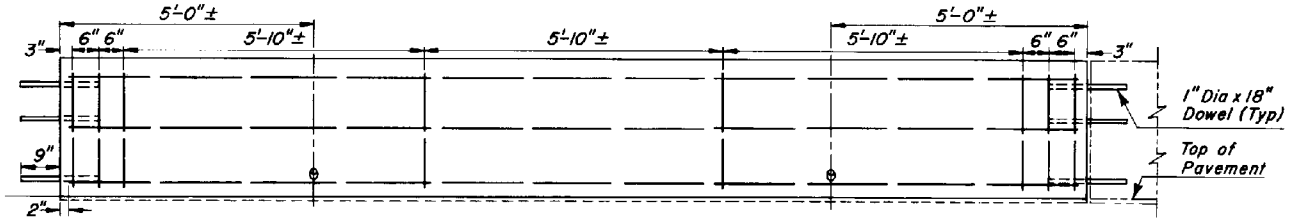

ELEVATION

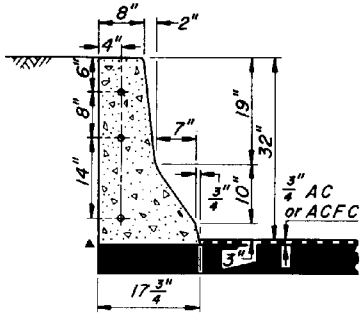

SECTION A-A

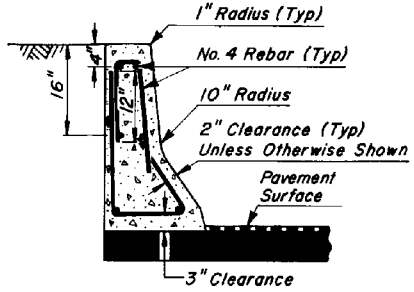

SECTION B-B

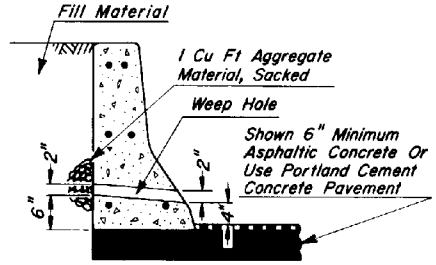

SECTION C-C

DESIGN APPROVED	STATE OF ARIZONA DEPARTMENT OF TRANSPORTATION DIVISION OF HIGHWAYS STANDARD DRAWINGS	REV 11/83
APPROVED FOR DISTRIBUTION	HALF BARRIER, CAST IN PLACE, FIXED FORM	DRAWING NO. C-10.10

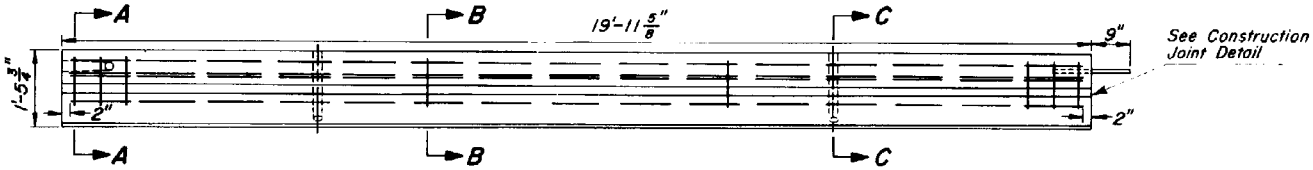

PLAN

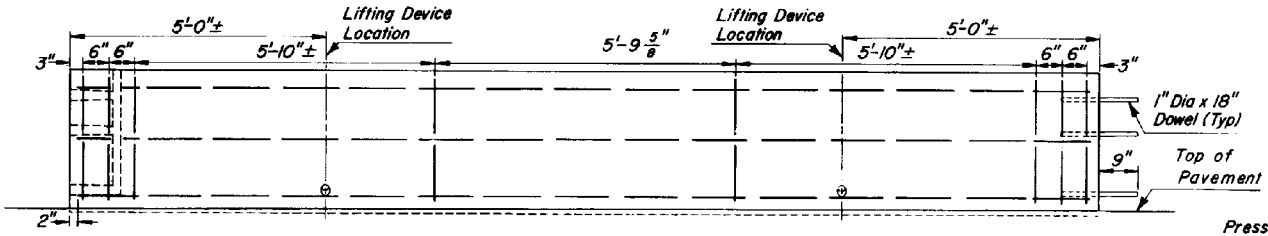

ELEVATION

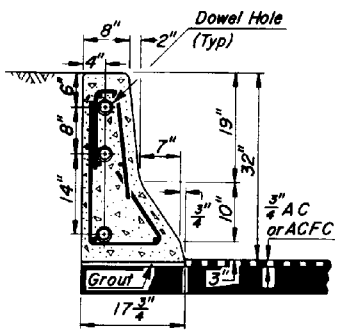

SECTION A-A

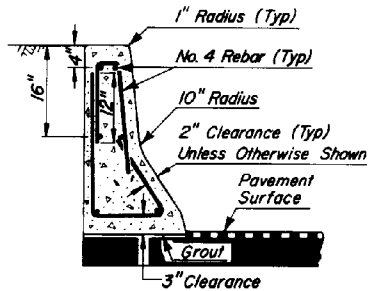

SECTION B-B

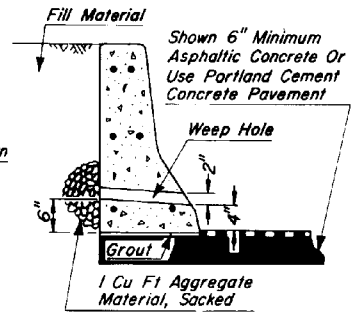

SECTION C-C

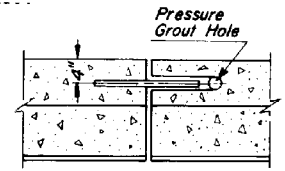

PLAN

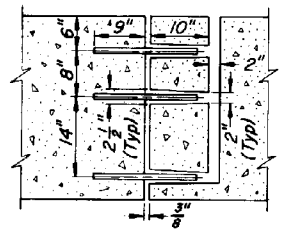

ELEVATION

CONSTRUCTION JOINT DETAIL

DESIGN APPROVED	STATE OF ARIZONA DEPARTMENT OF TRANSPORTATION DIVISION OF HIGHWAYS STANDARD DRAWINGS	REV. 1/83
APPROVED FOR DISTRIBUTION	HALF BARRIER, PRECAST	DRAWING NO. C-10.11

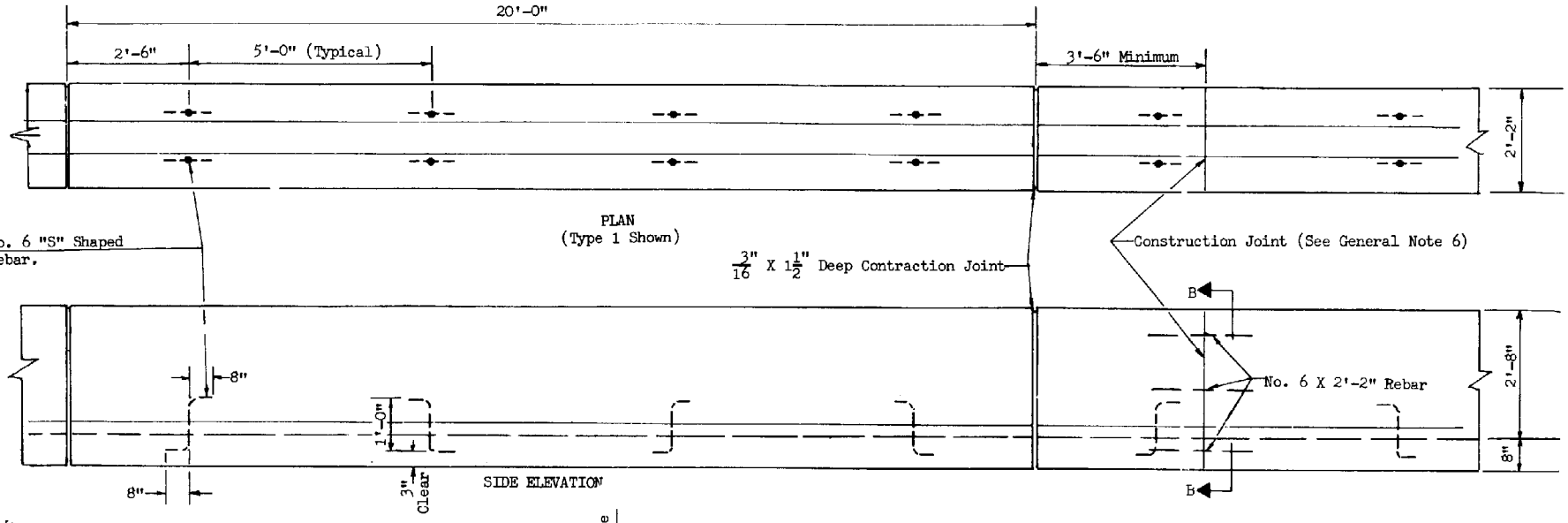

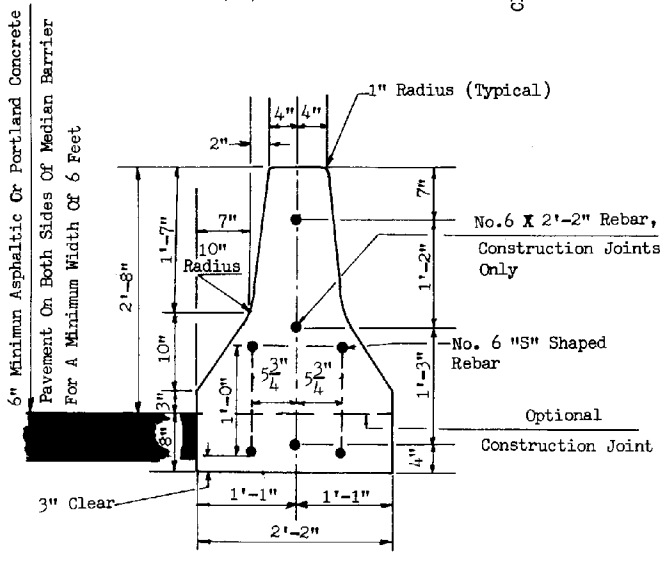

TYPE 1

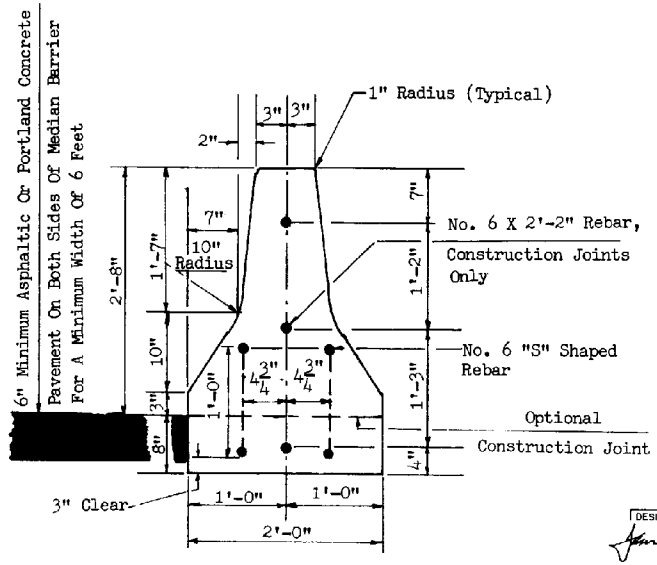

TYPE 2

SECTION B-B

GENERAL NOTES:

1. Median Barrier shall be constructed by the slip form or extrusion method.
2. When obstacles are encountered which prevent the use of slip form equipment, the closure shall be accomplished by the use of stationary forms.
3. Unless otherwise specified on project plans, the Type 1 Median Barrier shall be constructed.
4. Concrete shall be Class S, design strength f'_c = 3000 p.s.i.
5. If the footing and barrier are cast monolithlicly No. 6 "S" shaped rebars and optional construction joint will not be required.
6. Construction joints shall be kept to a minimum. Joints shall be finished with tool having a 1/4 inch radius.
7. Contraction joints shall be sealed with an approved joint sealant.

DESIGN APPROVED	STATE OF ARIZONA DEPARTMENT OF TRANSPORTATION DIVISION OF HIGHWAYS STANDARD DRAWINGS	REV. 1/83
APPROVED FOR DISTRIBUTION	MEDIAN BARRIER, CAST IN PLACE, SLIP FORM	DRAWING NO. C-10.12

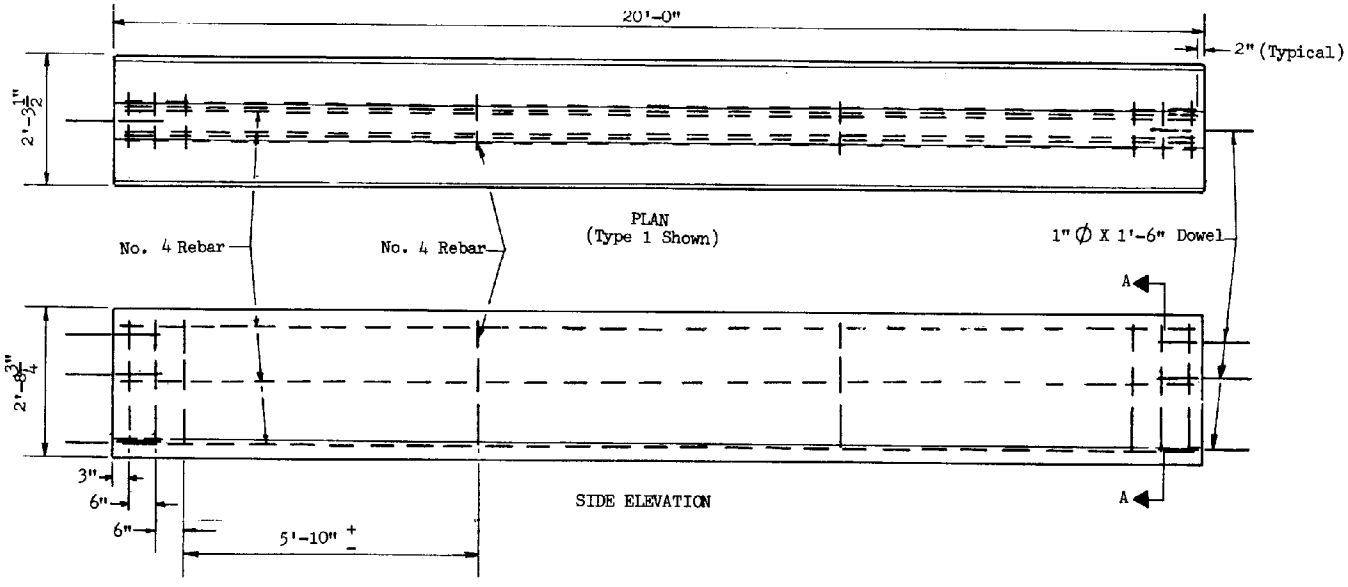

GENERAL NOTES:

1. Concrete shall be Class S, design strength f'_c = 3000 p.s.i.

2. Unless otherwise specified on project plans, the Type 1 Median Barrier shall be constructed.

3. Median Barrier shall be placed upon either Asphaltic or Portland Cement Concrete Pavement.

4. Pavement thickness adjacent to Median Barrier shall be 3/4 inch minimum.

5. Joints shall be finished with a tool having a 1/4 inch radius.

6. This standard shall not be used when an individual run consists of less than five 20 foot sections.

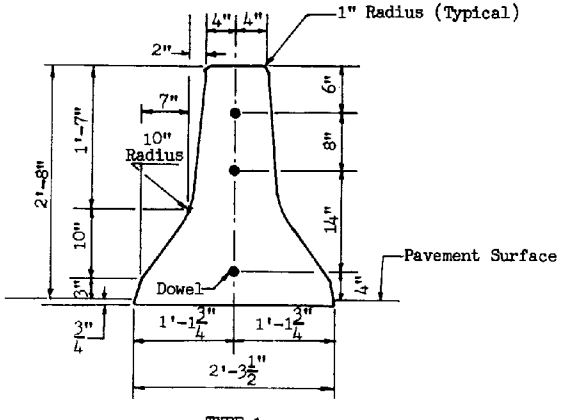

TYPE 1

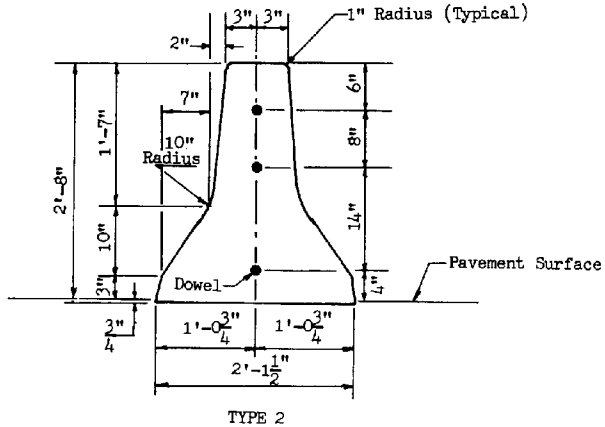

TYPE 2

END ELEVATION

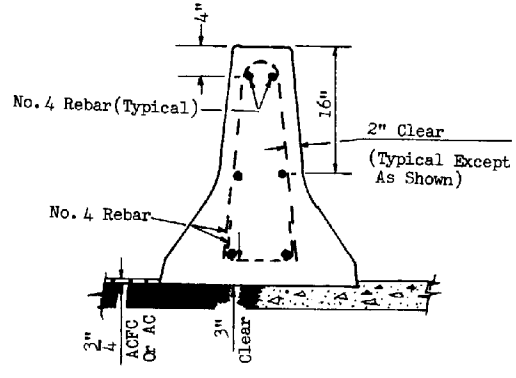

SECTION A-A

DESIGN APPROVED	STATE OF ARIZONA DEPARTMENT OF TRANSPORTATION DIVISION OF HIGHWAYS STANDARD DRAWINGS	REV. 1/83
APPROVED FOR DISTRIBUTION	MEDIAN BARRIER, CAST IN PLACE, FIXED FORM	DRAWING NO. C-10.13

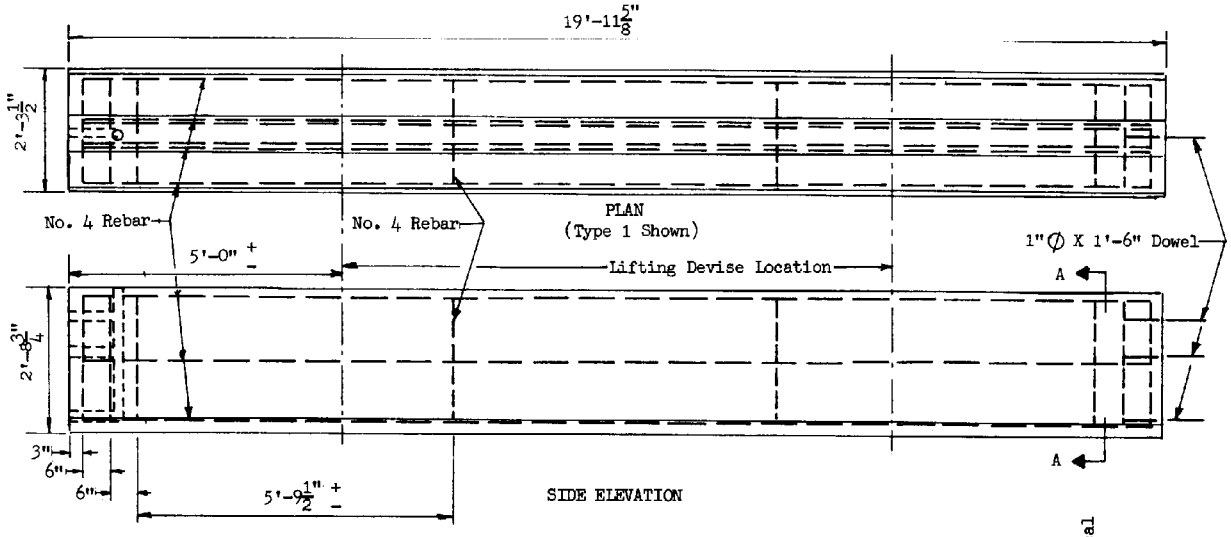

GENERAL NOTES:

1. Concrete shall be Class S, design strength f'_c = 3000 p.s.i.
2. Unless otherwise specified on the project plans, the Type 1 Median Barrier shall be constructed.
3. Median Barrier shall be placed upon either Asphaltic or Portland Cement Concrete Pavement.
4. Pavement thickness adjacent to Median Barrier shall be 3/4 inch minimum.
5. The Median Barrier shall be placed upon a bed of grout in order to provide a uniform bearing.
6. Doweled joints shall be grouted under pressure until all of the openings and the joint are filled.
7. This standard shall not be used when an individual run consists of less than five 20 foot sections.

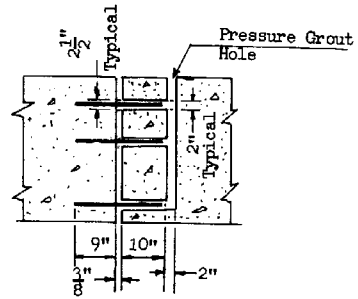

SECTION THROUGH JOINT

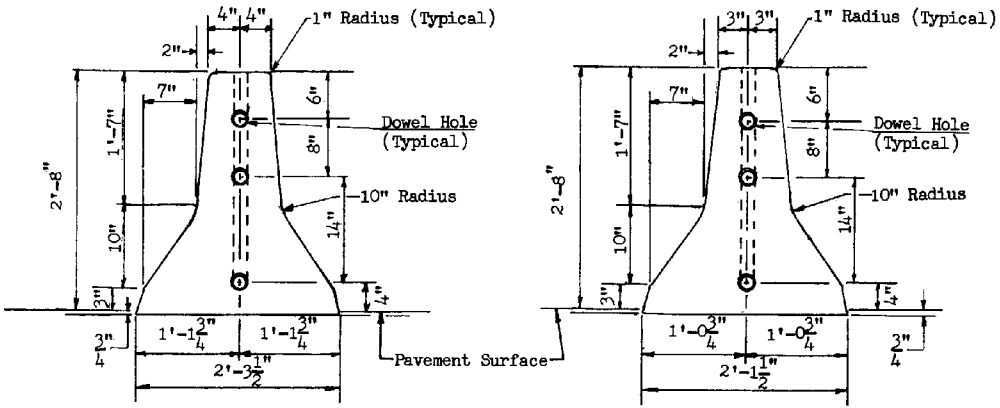

END ELEVATION

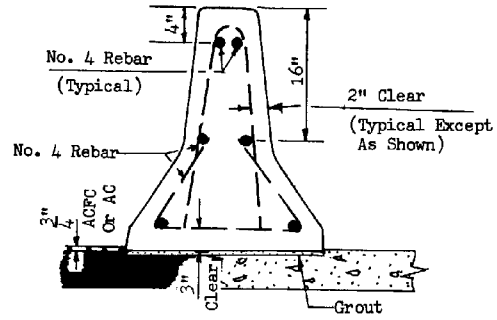

SECTION A-A

DESIGN APPROVED	STATE OF ARIZONA DEPARTMENT OF TRANSPORTATION DIVISION OF HIGHWAYS STANDARD DRAWINGS	REV. 1/83
APPROVED FOR DISTRIBUTION	MEDIAN BARRIER, PRECAST	DRAWING NO. C-10.14

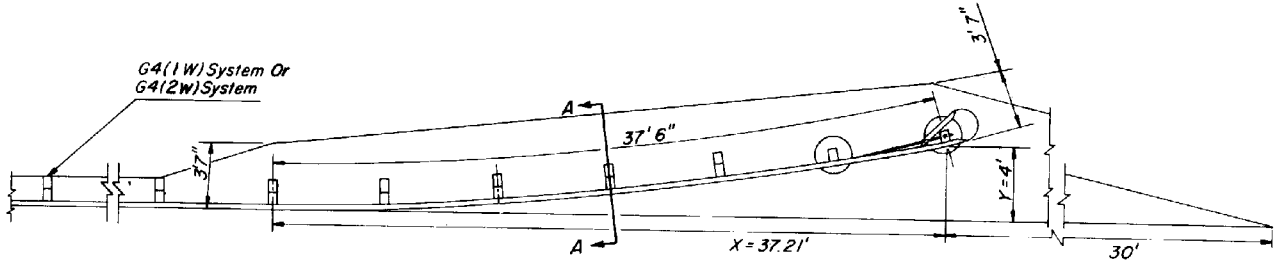

PLAN

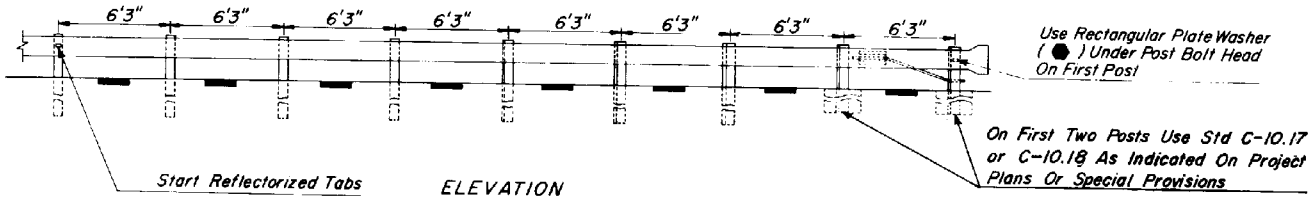

ELEVATION

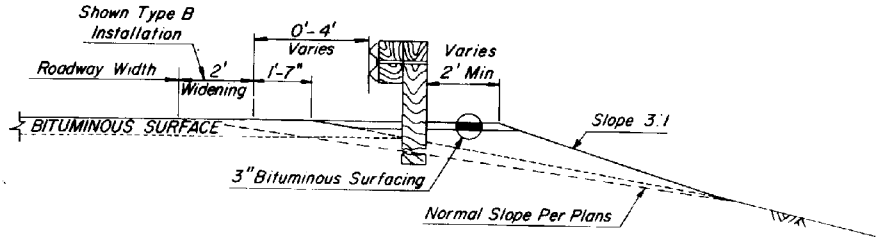

SECTION A-A

FLARED GEOMETRICS		
Dst Along 37'6" Parabolic Curve	Dst Along X Axis	Dst Along Y Axis To Face Of Guard Rail
6'3"	6.25'	0.11'
12'6"	12.49'	0.45'
18'9"	18.71'	1.01'
25'0"	24.92'	1.79'
31'3"	31.08'	2.79'
37'6"	37.21'	4.00'

GENERAL NOTES

●–Indicates ARTBA designation.

LAYOUT AND DETAILS OF THE FLARE

DESIGN APPROVED	STATE OF ARIZONA DEPARTMENT OF TRANSPORTATION DIVISION OF HIGHWAYS STANDARD DRAWINGS	REV. 7/85
APPROVED FOR DISTRIBUTION	FLARED BREAKAWAY CABLE TERMINAL ASSEMBLY (TIMBER POST)	DRAWING NO. C 10.15

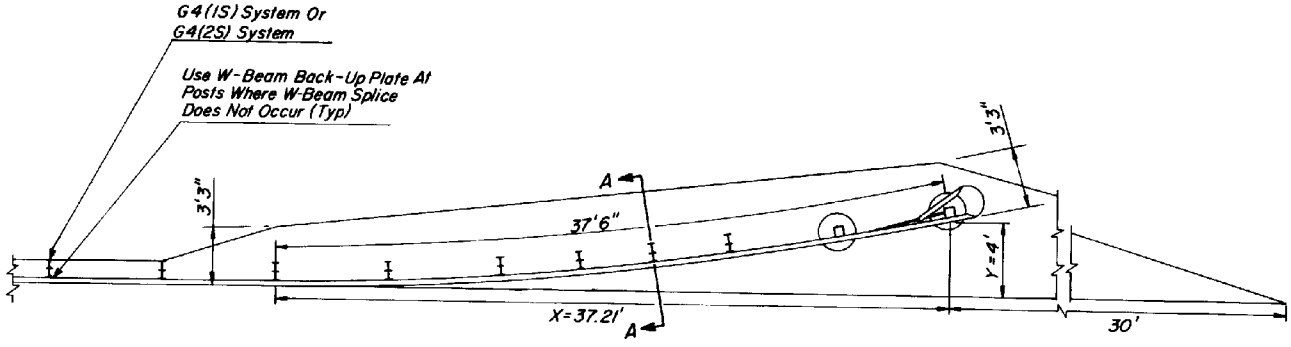

PLAN

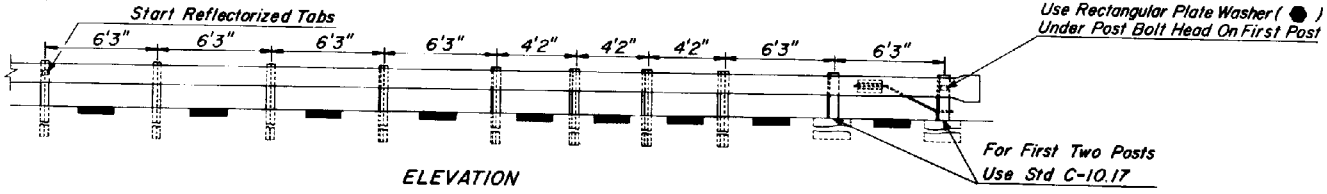

ELEVATION

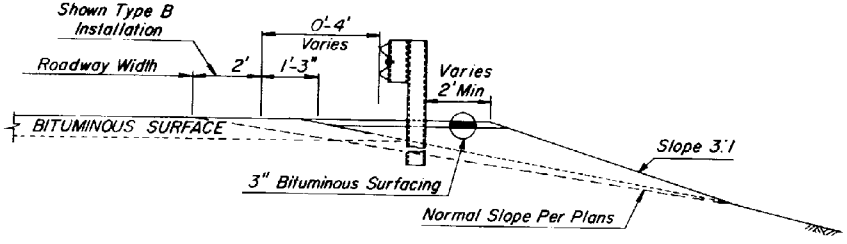

SECTION A-A

GENERAL NOTES

●-Indicates ARTBA designation.

FLARED GEOMETRICS		
Dst Along 37'6" Parabolic Curve	Dst Along X Axis	Dst Along Y Axis To Face Of Guard Rail
6'3"	6.25'	0.11'
12'6"	12.49'	0.44'
16'8"	16.64'	0.79'
20'10"	20.78'	1.23'
25'0"	24.92'	1.78'
31'3"	31.08'	2.78'
37'6"	37.21'	4.00

LAYOUT AND DETAILS OF THE FLARE

DESIGN APPROVED	STATE OF ARIZONA DEPARTMENT OF TRANSPORTATION DIVISION OF HIGHWAYS STANDARD DRAWINGS	REV. 7/85
APPROVED FOR DISTRIBUTION	FLARED BREAKAWAY CABLE TERMINAL ASSEMBLY (STEEL POST)	DRAWING NO. C 10.16

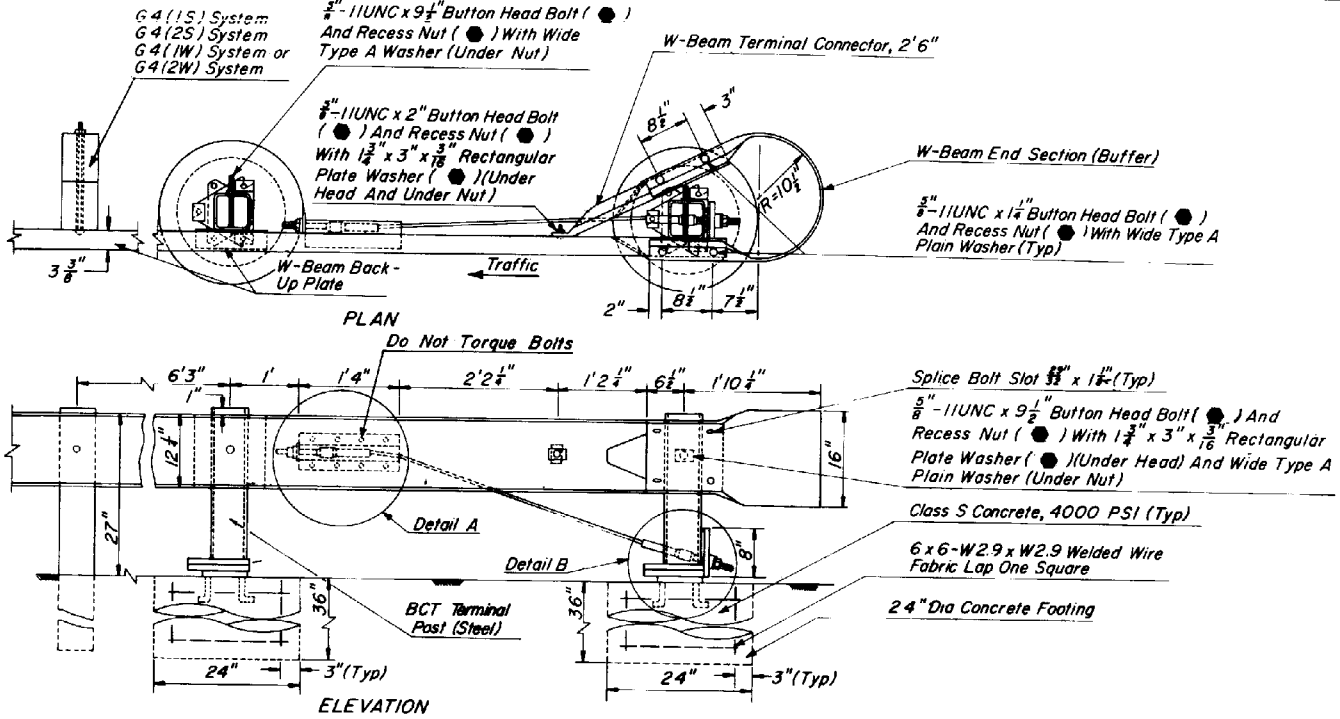

GENERAL NOTES

1. BCT Cable Assembly shall be tightened to remove slack.
2. 5/8"-11UNC x 3 1/4" Heavy Hex Screw, connecting BCT Terminal Post (Steel) and BCT (Steel) Foundation Plates, shall be torqued to 170 ft. lbs.
3. To ensure that the BCT (Steel) Bearing Plate remains in position, one wrap of 14 Gauge Galvanized Steel Wire shall be wrapped around the BCT Terminal Post (Steel) and near the top of the plate.

● - Indicates ARTBA designation.

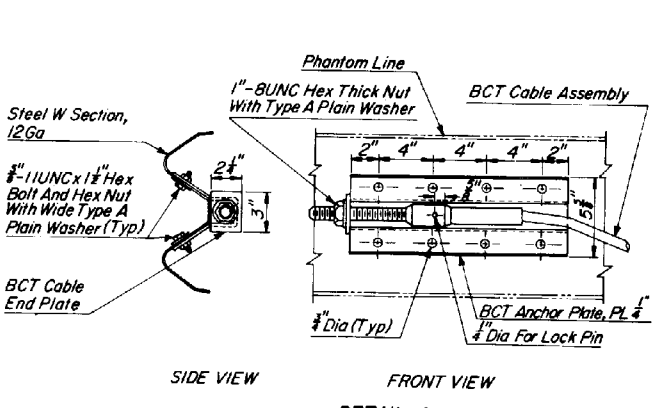

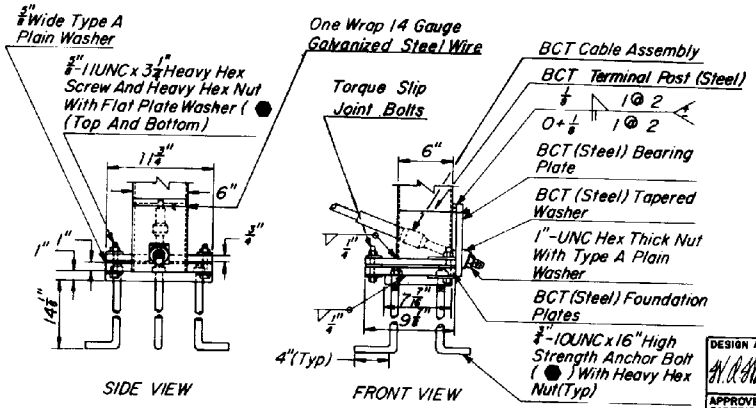

DESIGN APPROVED	STATE OF ARIZONA DEPARTMENT OF TRANSPORTATION DIVISION OF HIGHWAYS STANDARD DRAWINGS	REV. 6/86
APPROVED FOR DISTRIBUTION	BCT ASSEMBLY STEEL	DRAWING NO. C-10.17

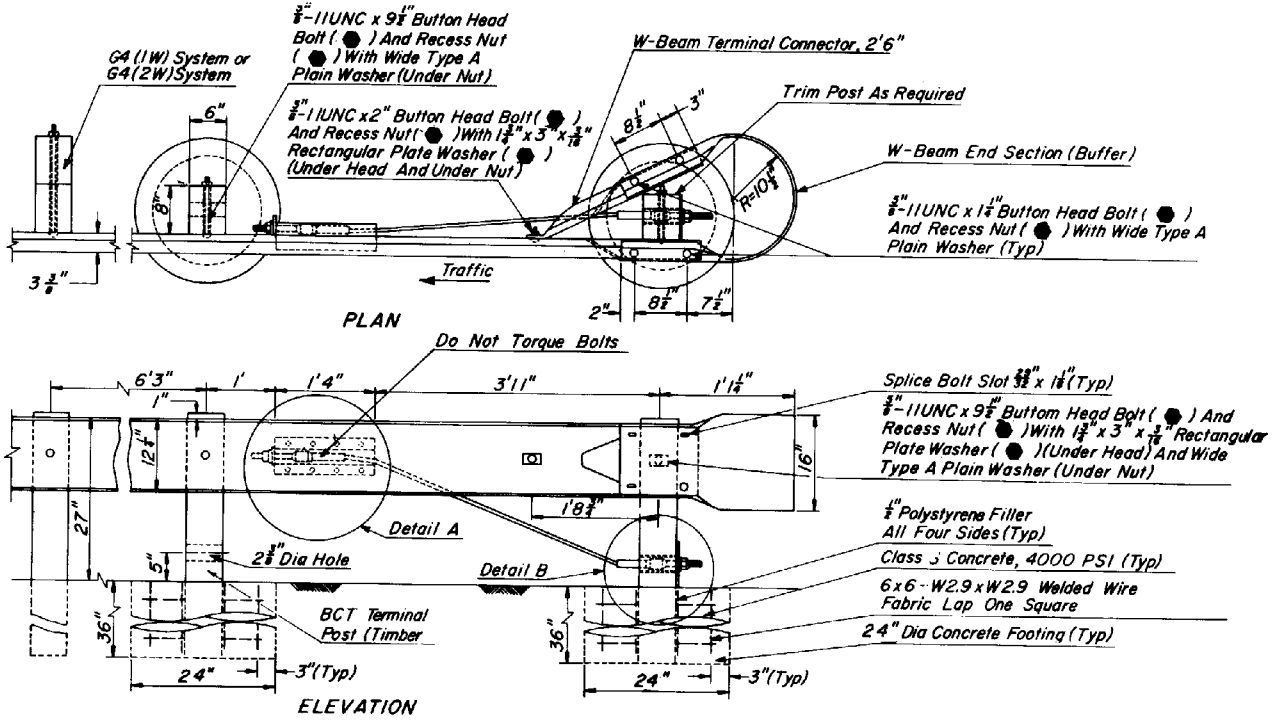

GENERAL NOTES

1. BCT Cable Assembly shall be tightened to remove slack.
2. To ensure that the BCT (Timber) Bearing Plate remains in position, Two eightpenny galvanized steel nails shall be driven into the BCT Terminal Post (Timber) and bent over the plate.

● Indicates ARTBA designation.

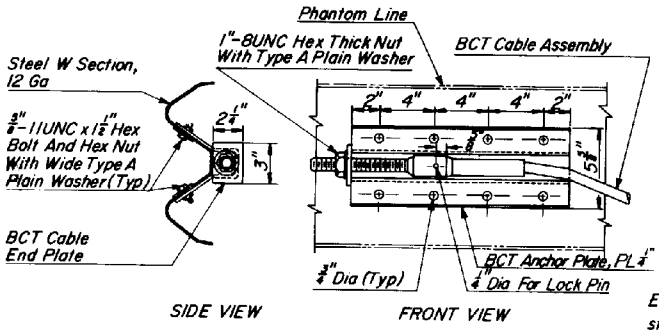

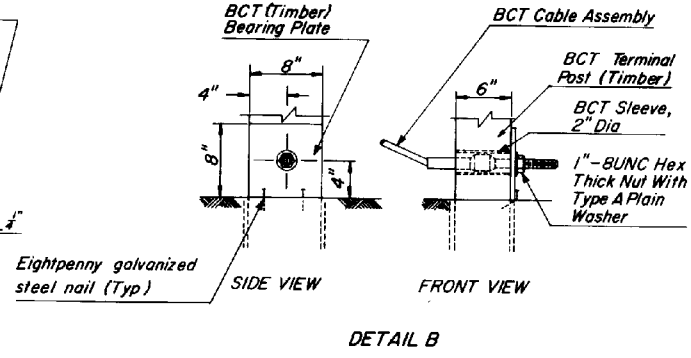

DESIGN APPROVED	STATE OF ARIZONA DEPARTMENT OF TRANSPORTATION DIVISION OF HIGHWAYS STANDARD DRAWINGS	REV. 6/86
APPROVED FOR DISTRIBUTION	BCT ASSEMBLY TIMBER	DRAWING NO. C-10.18

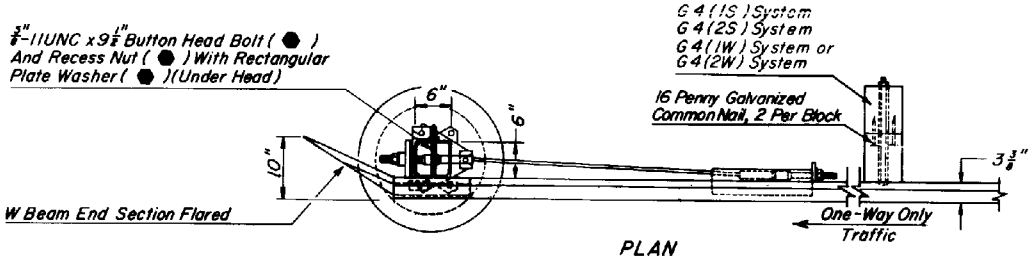

PLAN

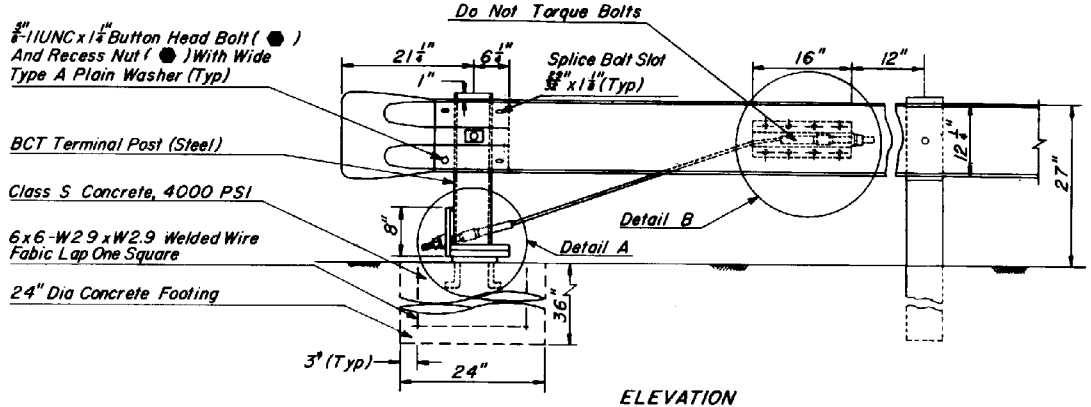

ELEVATION

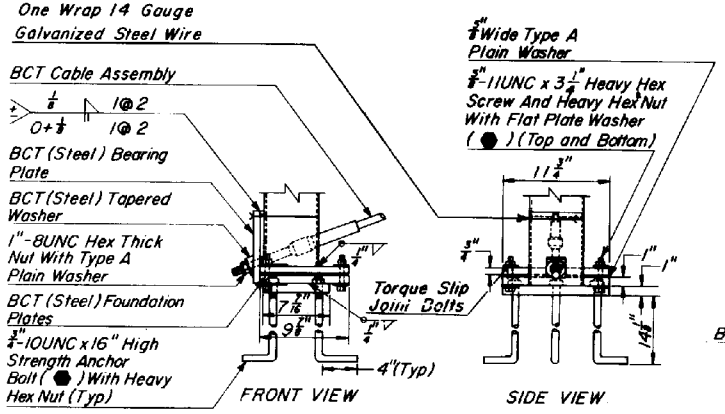

DETAIL A

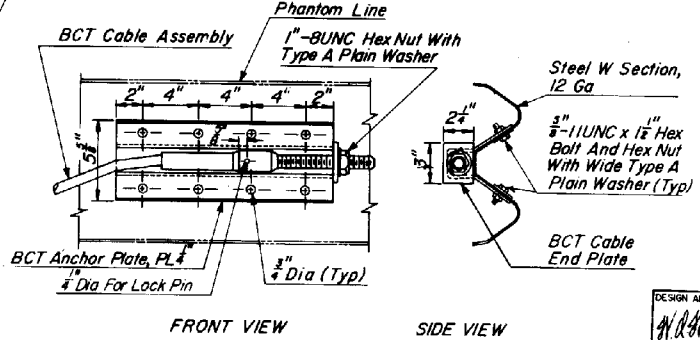

DETAIL B

GENERAL NOTES

1. BCT Cable Assembly shall be tightened to remove slack.
2. 5/8"-11UNC x 3 1/4" Heavy Hex Screw, connecting BCT Terminal Post (Steel) and BCT (Steel) Foundation Plates, shall be torqued to 170 ft. lbs.
3. To ensure that the BCT (Steel) Bearing Plate remains in position, one wrap of 14 Gauge Galvanized Steel Wire shall be wrapped around the BCT Terminal Post (Steel) and near the top of the plate.

● - Indicates ARTBA designation.

DESIGN APPROVED	STATE OF ARIZONA DEPARTMENT OF TRANSPORTATION DIVISION OF HIGHWAYS STANDARD DRAWINGS	REV. 6/86
APPROVED FOR DISTRIBUTION	GUARDRAIL ANCHOR ASSEMBLY STEEL TERMINAL POST	DRAWING NO. C-10.21

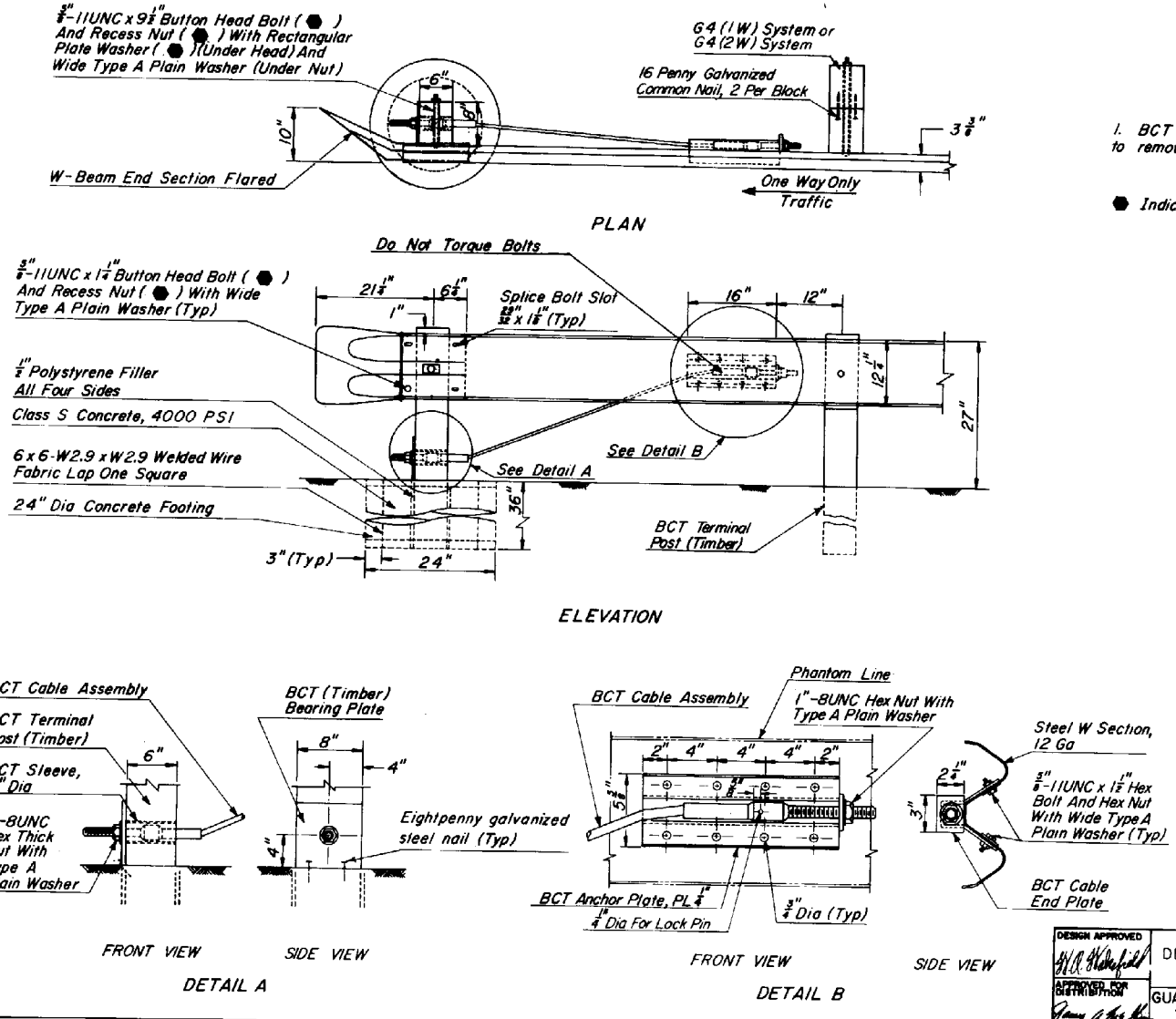

GENERAL NOTES

1. BCT Cable Assembly shall be tightened to remove slack.

● Indicates ARTBA designation.

DESIGN APPROVED	STATE OF ARIZONA DEPARTMENT OF TRANSPORTATION DIVISION OF HIGHWAYS STANDARD DRAWINGS	REV 6/86
APPROVED FOR DISTRIBUTION	GUARD RAIL ANCHOR ASSEMBLY TIMBER TERMINAL POST	DRAWING No. C-10.22

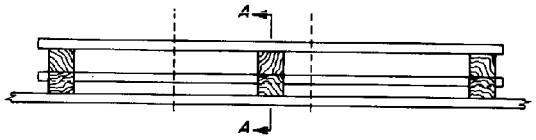

PLAN

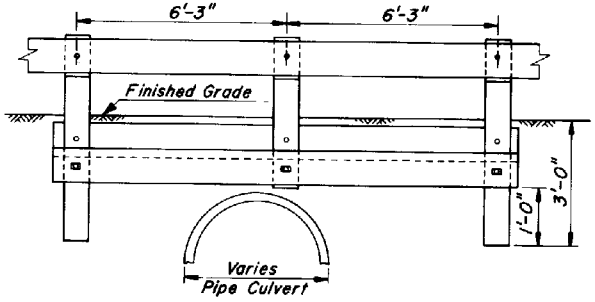

ELEVATION

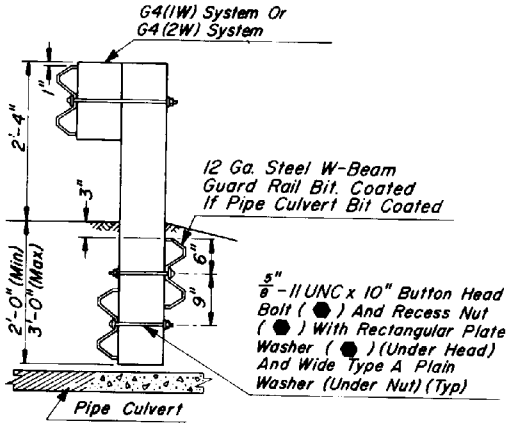

SECTION A-A

BURIED ANCHOR
PIPE CULVERT INSTALLATION

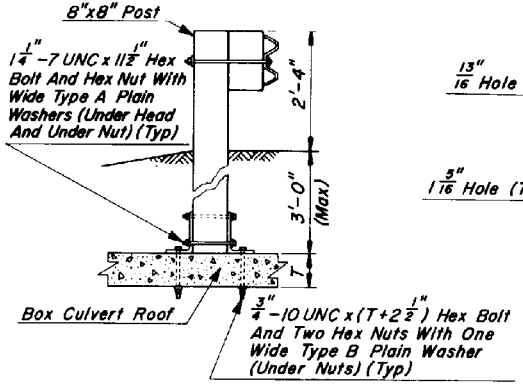

INSTALLATION DETAIL

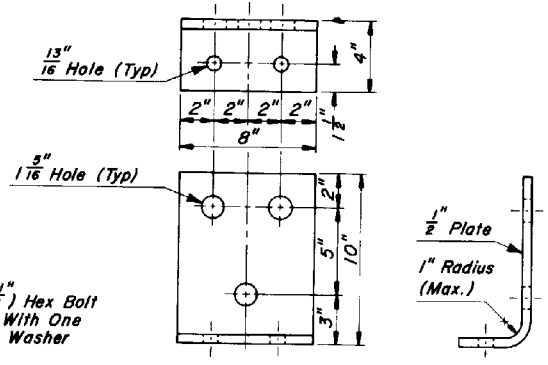

BRACKET DETAIL

BOLTED ANCHOR
BOX CULVERT INSTALLATION

GENERAL NOTES

1. Extend buried W-Beam 6'-3" past last short post.
2. Drill through top of box culvert with rotary drill.
3. Bracket may be made of one piece hot bent, or two pieces welded together.
4. Short posts anchored to box culvert roof shall be 8"x8" only.
5. Rectangular Plate Washer (●) shall be used only at below ground connections

● -Indicates ARTBA designation.

DESIGN APPROVED	STATE OF ARIZONA DEPARTMENT OF TRANSPORTATION DIVISION OF HIGHWAYS STANDARD DRAWINGS	REV. 7/85
APPROVED FOR DISTRIBUTION	BURIED & BOLTED ANCHOR TIMBER POST	DRAWING No. C-10.23

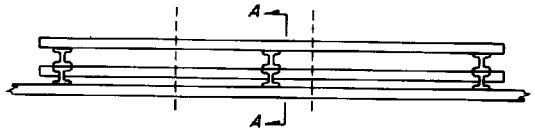

PLAN

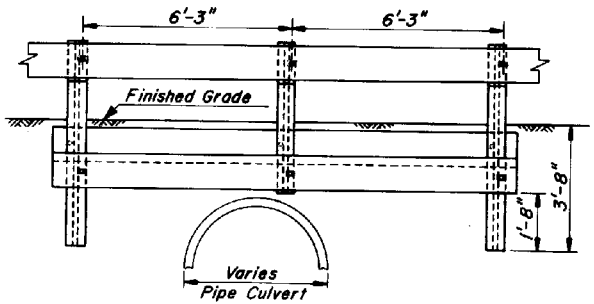

ELEVATION

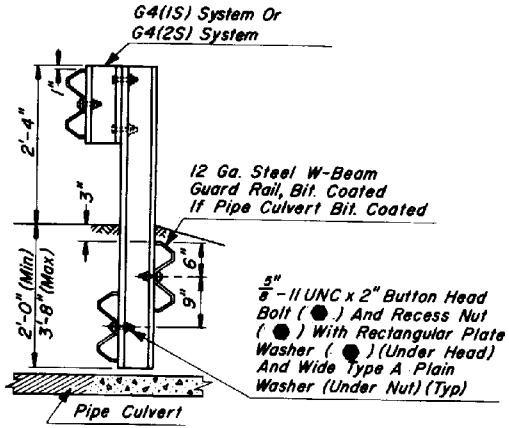

SECTION A-A

BURIED ANCHOR
PIPE CULVERT INSTALLATION

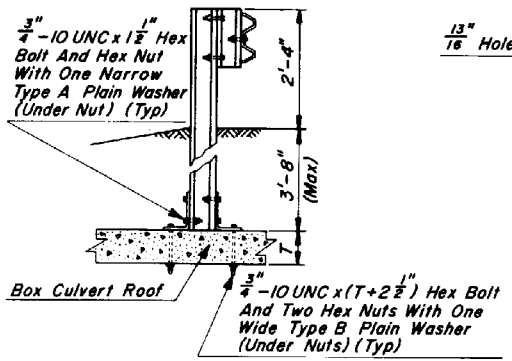

INSTALLATION DETAIL

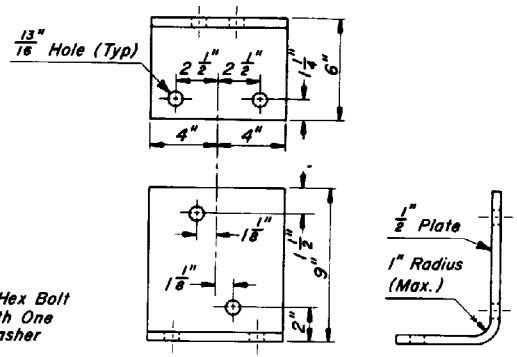

BRACKET DETAIL

BOLTED ANCHOR
BOX CULVERT INSTALLATION

GENERAL NOTES

1. Extend buried W-Beam 6'-3" past last short post.
2. Drill through top of box culvert with rotary drill.
3. Bracket may be made of one piece hot bent, or two pieces welded together.
4. Rectangular Plate Washer (●) shall be used only at below ground connections.

● -Indicates ARTBA designation.

DESIGN APPROVED	STATE OF ARIZONA DEPARTMENT OF TRANSPORTATION DIVISION OF HIGHWAYS STANDARD DRAWINGS	REV. 1/85
APPROVED FOR DISTRIBUTION	BURIED & BOLTED ANCHOR STEEL POST	DRAWING No. C 1024

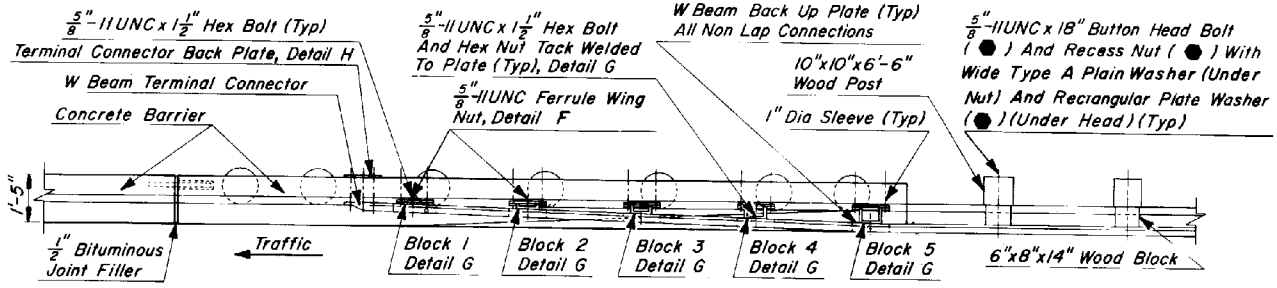

PLAN

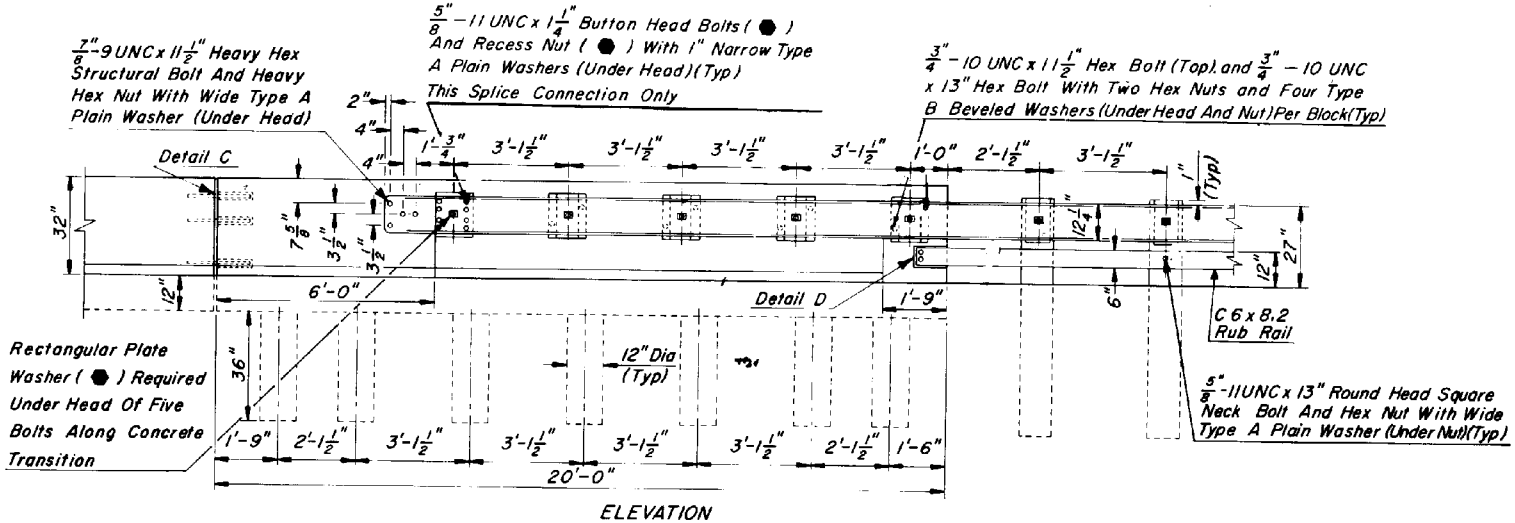

ELEVATION

GENERAL NOTES

● – Indicates ARTBA designation.

DESIGN APPROVED	STATE OF ARIZONA DEPARTMENT OF TRANSPORTATION DIVISION OF HIGHWAYS STANDARD DRAWINGS	REV. 6/86
APPROVED FOR DISTRIBUTION	TRANSITION W BEAM (TIMBER POST) TO CONCRETE HALF BARRIER	DRAWING NO. C-10.25 Sheet 1 of 5

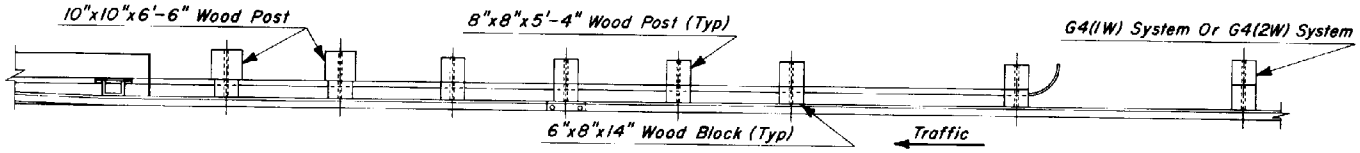

PLAN

GENERAL NOTES

●-Indicates ARTBA designation.

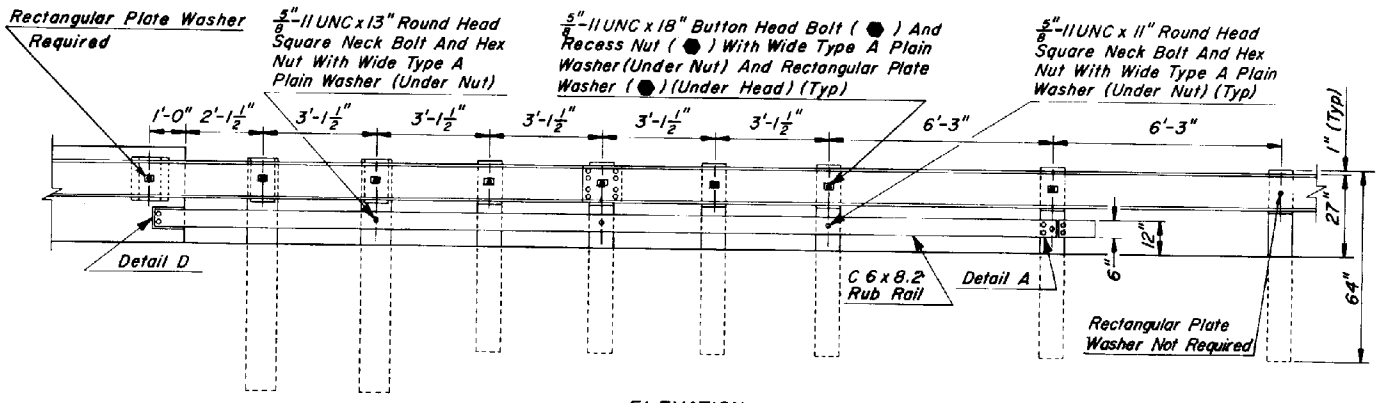

ELEVATION

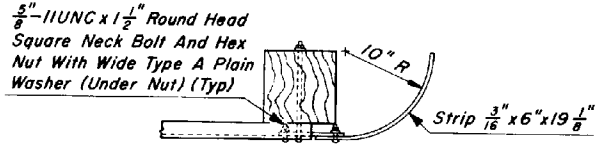

PLAN

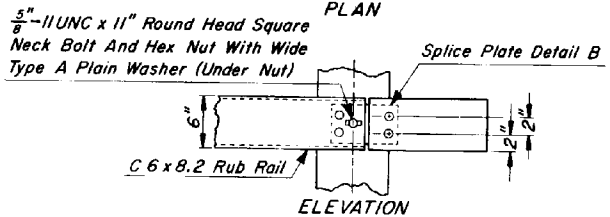

ELEVATION

DETAIL A

RUB RAIL TERMINAL ASSEMBLY

Note : All Slots 11/16" x 2", All Square Holes 11/16"

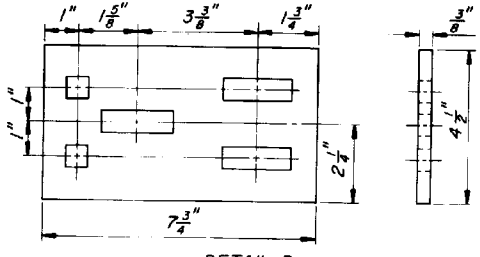

DETAIL B

RUB RAIL SPLICE PLATE

DESIGN APPROVED	STATE OF ARIZONA DEPARTMENT OF TRANSPORTATION DIVISION OF HIGHWAYS STANDARD DRAWINGS	REV 6/86
APPROVED FOR DISTRIBUTION	TRANSITION W BEAM (TIMBER POST) TO CONCRETE HALF BARRIER	DRAWING NO. C-10.25 Sheet 2 of 5

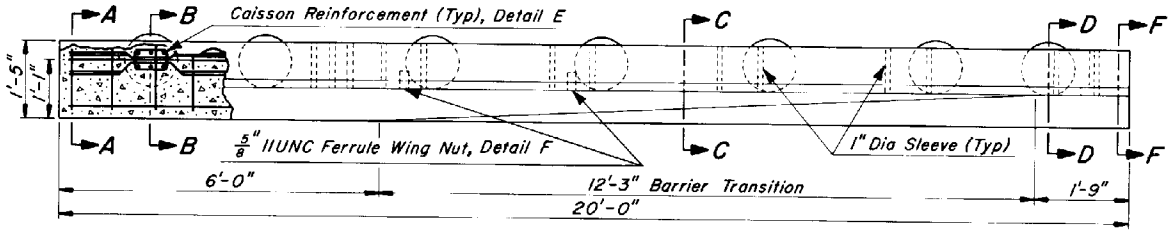

PLAN

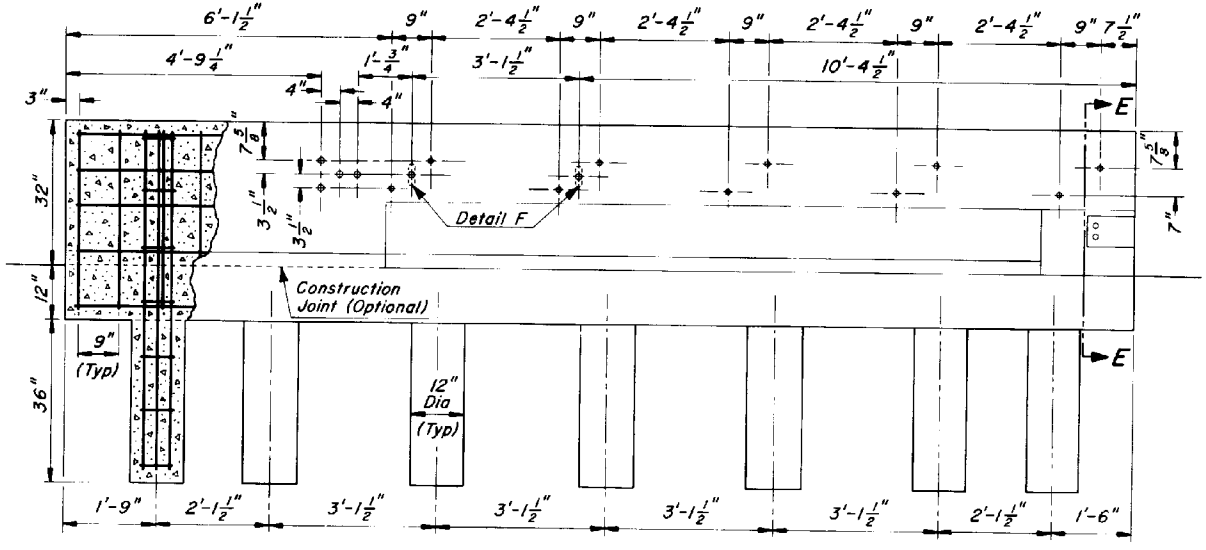

ELEVATION

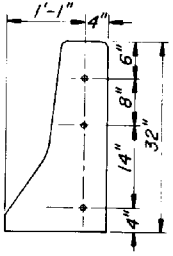

DOWEL LOCATIONS

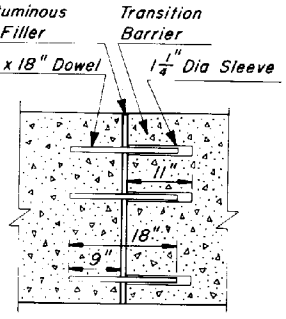

JOINT ASSEMBLY

DETAIL C

DOWEL INSTALLATION AND CONSTRUCTION JOINT

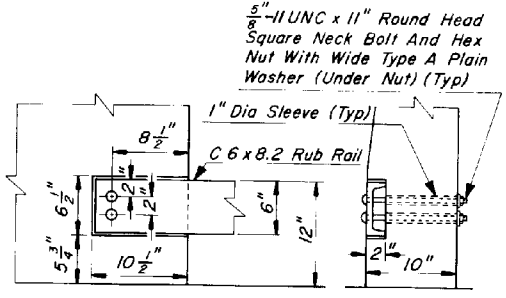

DETAIL D

RUB RAIL ANCHOR

DESIGN APPROVED	STATE OF ARIZONA DEPARTMENT OF TRANSPORTATION DIVISION OF HIGHWAYS STANDARD DRAWINGS	REV. 6/86
APPROVED FOR DISTRIBUTION	TRANSITION W BEAM (TIMBER POST) TO CONCRETE HALF BARRIER	DRAWING NO. C-10.25 Sheet 3 of 5

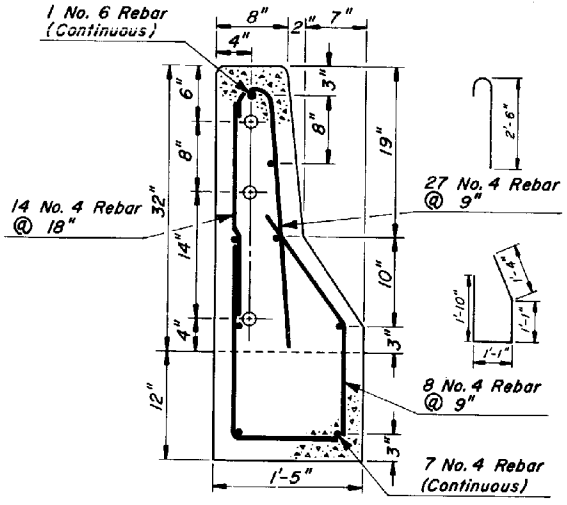

SECTION A-A

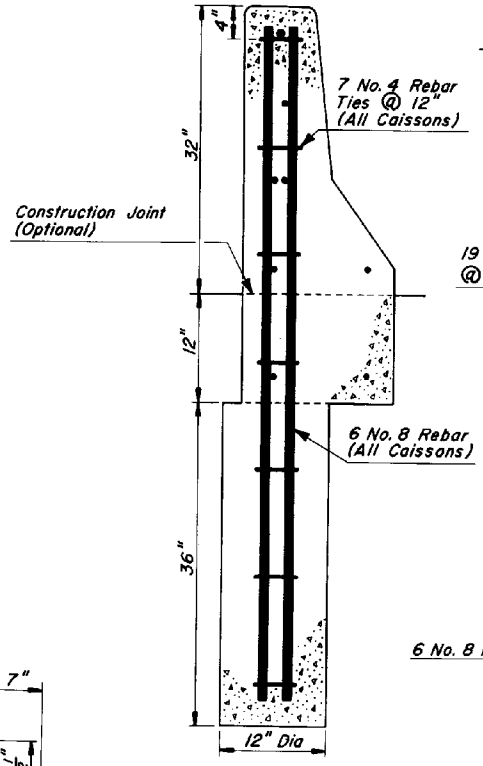

SECTION B-B

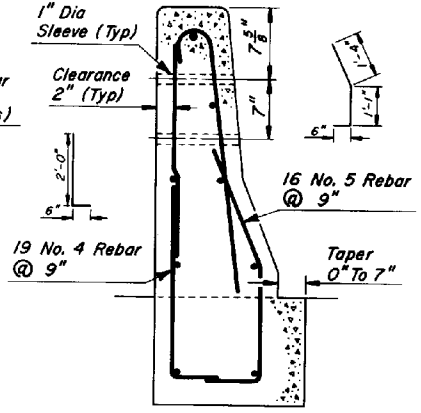

SECTION C-C

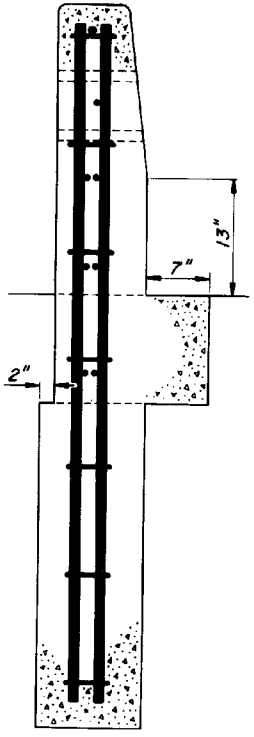

SECTION D-D

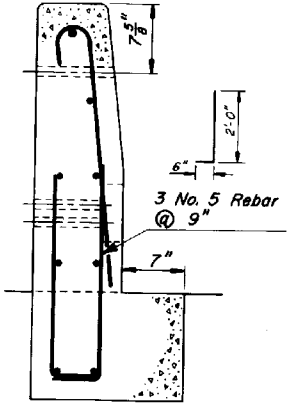

SECTION E-E

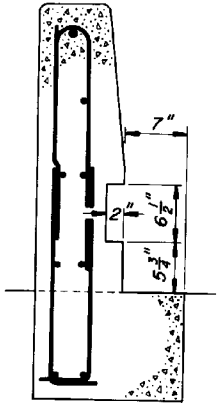

SECTION F-F

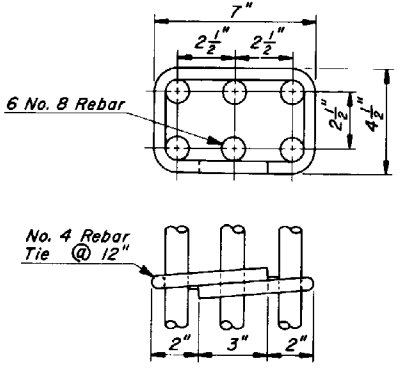

DETAIL E

CAISSON REINFORCEMENT

DESIGN APPROVED	STATE OF ARIZONA DEPARTMENT OF TRANSPORTATION DIVISION OF HIGHWAYS STANDARD DRAWINGS	REV. 7/85
APPROVED FOR DISTRIBUTION	TRANSITION W BEAM (TIMBER POST) TO CONCRETE HALF BARRIER	DRAWING NO. C-10.25 Sheet 4 of 5

	DIMENSION	
BLOCK	A	B
1	0"	0"
2	$1\frac{1}{4}$"	$\frac{7}{8}$"
3	$2\frac{1}{2}$"	$1\frac{3}{4}$"
4	$3\frac{11}{16}$"	$2\frac{5}{8}$"
5	$4\frac{15}{16}$"	$3\frac{7}{16}$"

NOTE: Block 1 Is A $\frac{1}{4}$" x 12" x 14" Plate
Block 2 May Be A Solid 6" x 14" Plate Tapered In Thickness From $1\frac{1}{4}$" To $\frac{7}{8}$" Welded To $\frac{1}{4}$" x 12" x 14" Plate

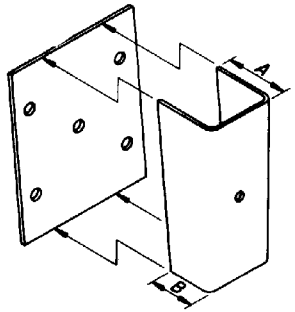

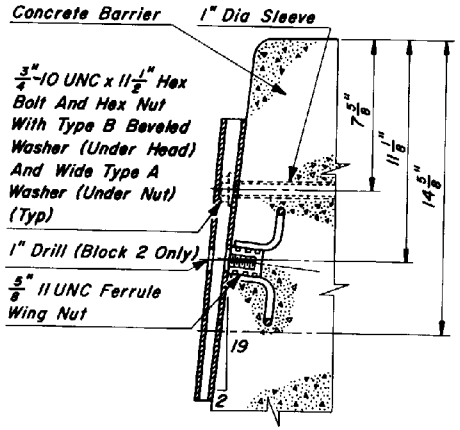

DETAIL F
SECTION THRU BLOCK AND ANCHORAGE

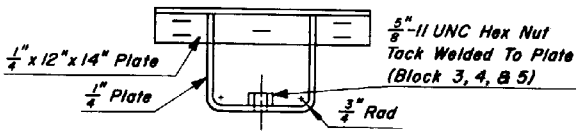

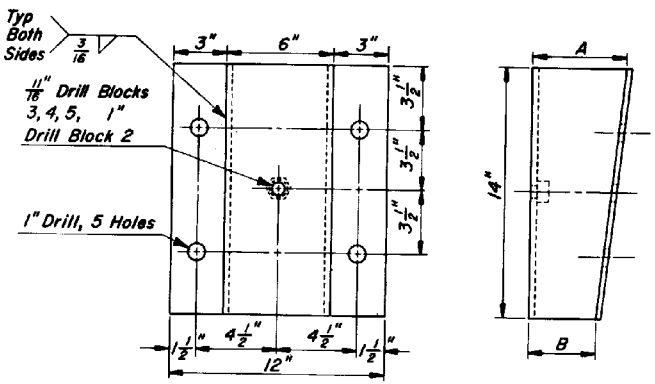

DETAIL G
BLOCK DETAILS

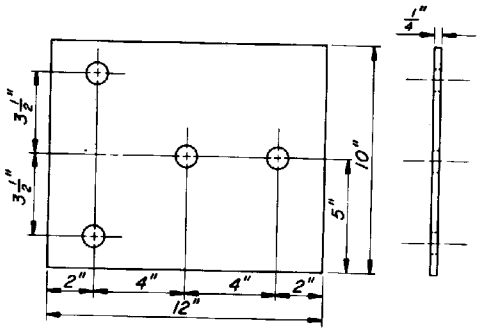

DETAIL H
TERMINAL CONNECTOR BACK PLATE

DESIGN APPROVED	STATE OF ARIZONA DEPARTMENT OF TRANSPORTATION DIVISION OF HIGHWAYS STANDARD DRAWINGS	REV. 7/85
APPROVED FOR DISTRIBUTION	TRANSITION W BEAM (TIMBER POST) TO CONCRETE HALF BARRIER	DRAWING NO. C-10.25 Sheet 5 of 5

	DIMENSION	
BLOCK	A	B
1	0"	0"
2	$1\frac{1}{4}$"	$\frac{7}{8}$"
3	$2\frac{1}{2}$"	$1\frac{3}{4}$"
4	$3\frac{11}{16}$"	$2\frac{5}{8}$"
5	$4\frac{15}{16}$"	$3\frac{7}{16}$"

NOTE: Block 1 Is A $\frac{1}{4}$" x 12" x 14" Plate
Block 2 May Be A Solid 6" x 14" Plate Tapered In Thickness From $1\frac{1}{4}$" To $\frac{7}{8}$" Welded To $\frac{1}{4}$" x 12" x 14" Plate

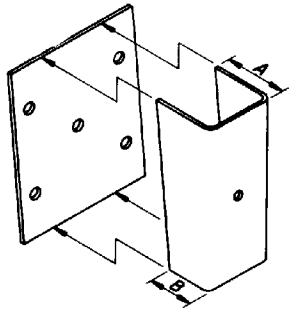

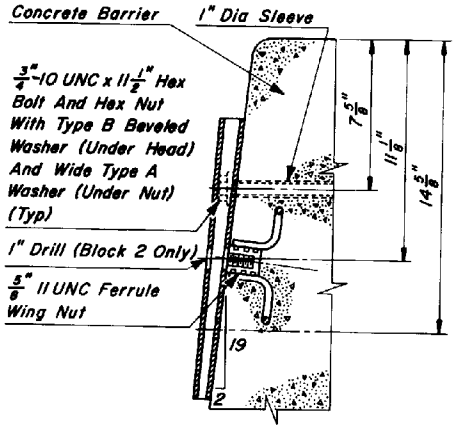

DETAIL F
SECTION THRU BLOCK AND ANCHORAGE

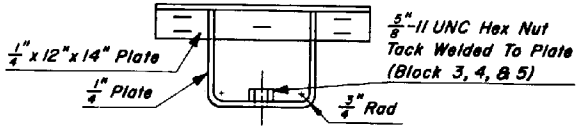

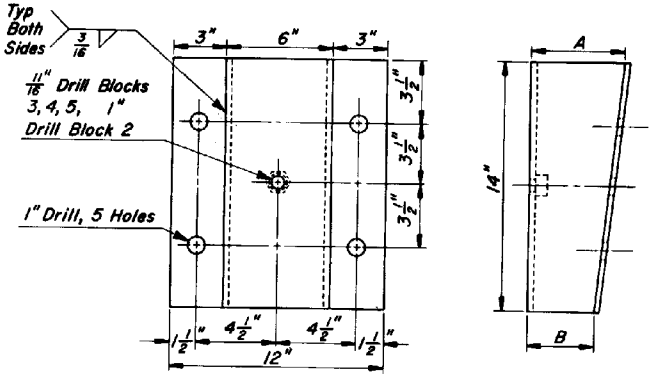

DETAIL G
BLOCK DETAILS

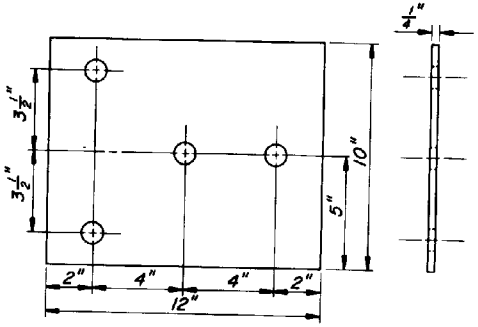

DETAIL H
TERMINAL CONNECTOR BACK PLATE

DESIGN APPROVED	STATE OF ARIZONA DEPARTMENT OF TRANSPORTATION DIVISION OF HIGHWAYS STANDARD DRAWINGS	REV. 7/85
APPROVED FOR DISTRIBUTION	TRANSITION W BEAM (TIMBER POST) TO CONCRETE HALF BARRIER	DRAWING NO. C-10.25 Sheet 5 of 5

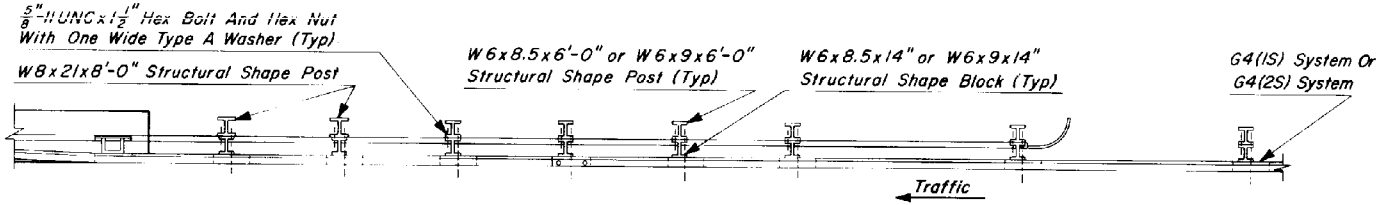

PLAN

GENERAL NOTES

●–Indicates ARTBA designation.

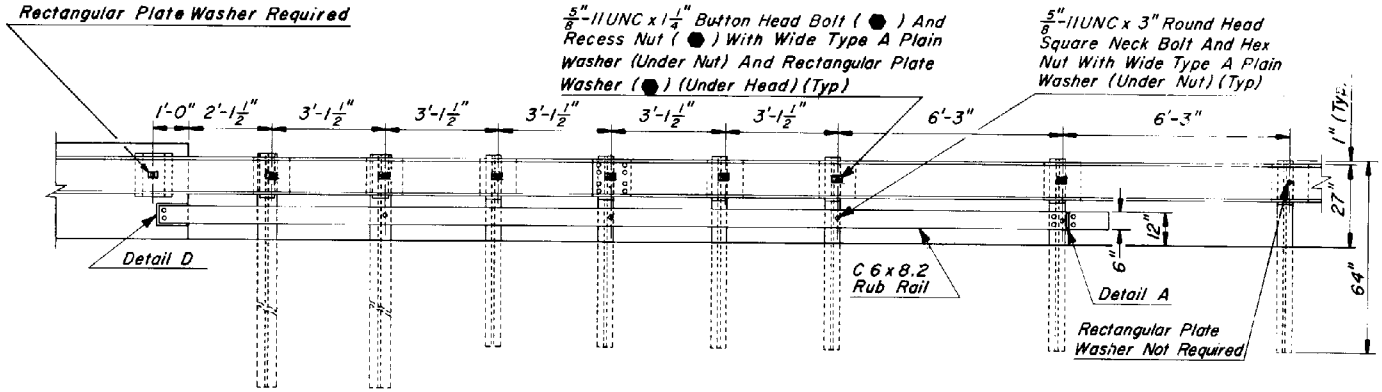

ELEVATION

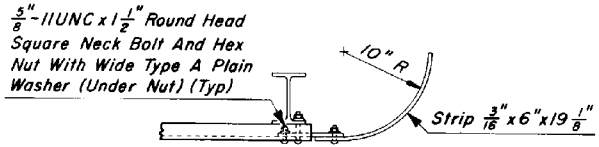

PLAN

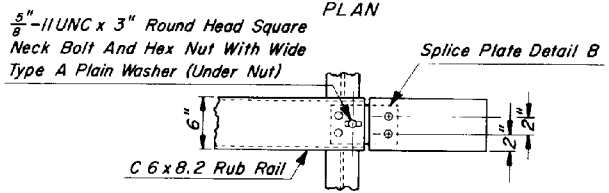

ELEVATION

DETAIL A

RUB RAIL TERMINAL ASSEMBLY

Note: All Slots 11/16" x 2", All Square Holes 11/16"

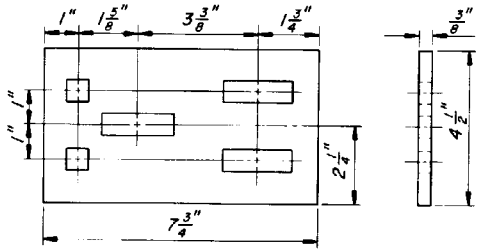

DETAIL B

RUB RAIL SPLICE PLATE

DESIGN APPROVED W.A. Wakefield	STATE OF ARIZONA DEPARTMENT OF TRANSPORTATION DIVISION OF HIGHWAYS STANDARD DRAWINGS	REV. 6/86
APPROVED FOR DISTRIBUTION James E. Tims-Mgr	TRANSITION W BEAM (STEEL POST) TO CONCRETE HALF BARRIER	DRAWING NO. C-10.30 Sheet 2 of 5

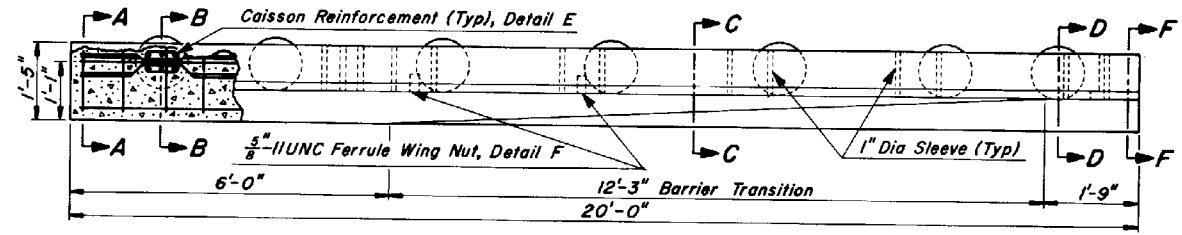

PLAN

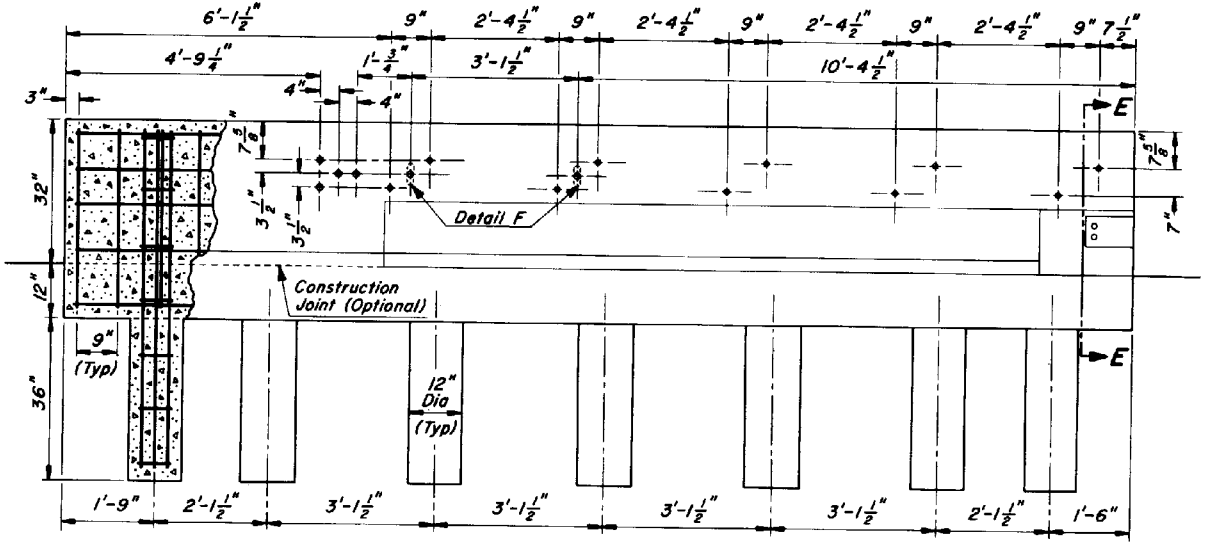

ELEVATION

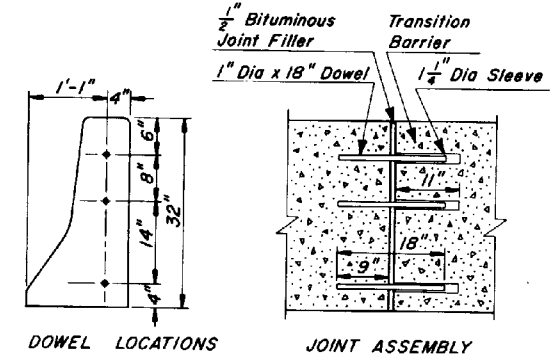

DETAIL C

DOWEL INSTALLATION AND CONSTRUCTION JOINT

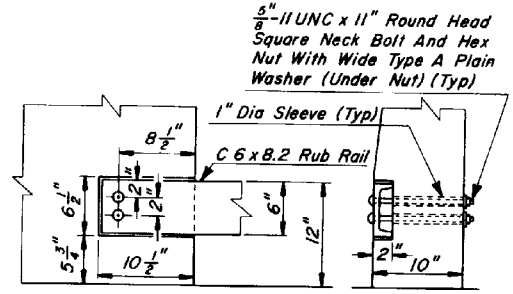

DETAIL D

RUB RAIL ANCHOR

DESIGN APPROVED	STATE OF ARIZONA DEPARTMENT OF TRANSPORTATION DIVISION OF HIGHWAYS STANDARD DRAWINGS	REV. 6/86
APPROVED FOR DISTRIBUTION	TRANSITION W BEAM (STEEL POST) TO CONCRETE HALF BARRIER	DRAWING NO. C-10.30 Sheet 3 of 5

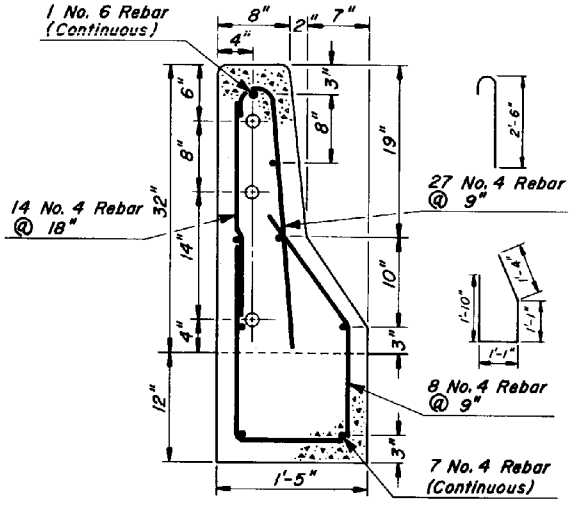

SECTION A-A

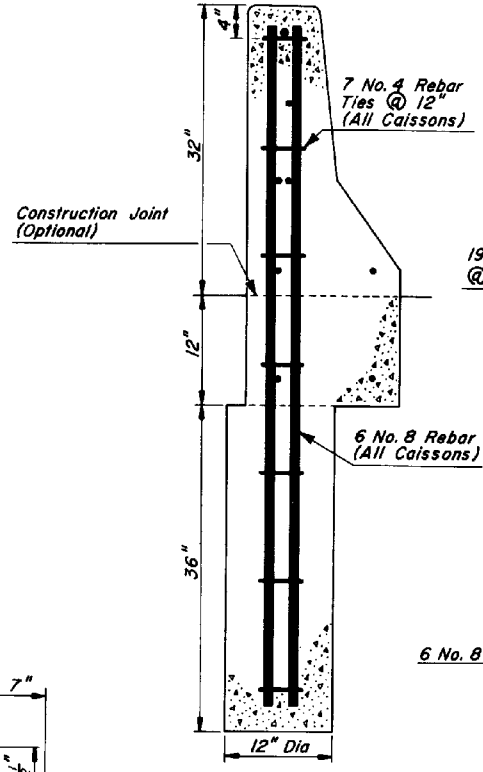

SECTION B-B

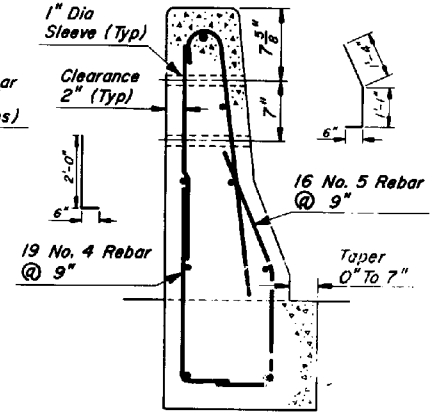

SECTION C-C

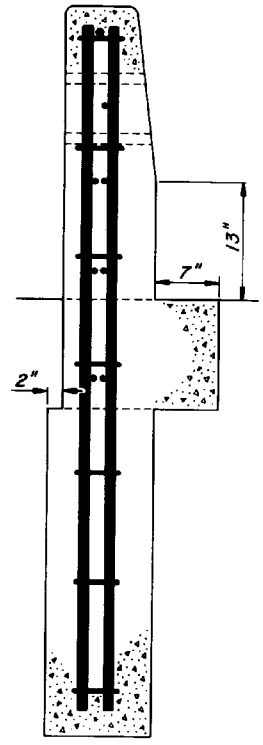

SECTION D-D

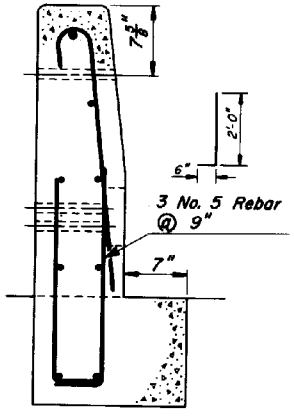

SECTION E-E

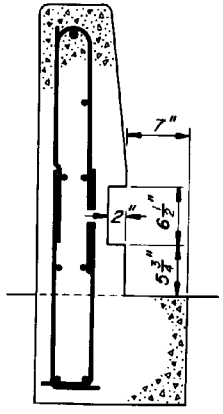

SECTION F-F

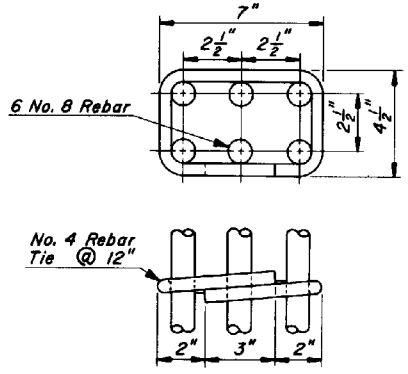

DETAIL E

CAISSON REINFORCEMENT

DESIGN APPROVED	STATE OF ARIZONA DEPARTMENT OF TRANSPORTATION DIVISION OF HIGHWAYS STANDARD DRAWINGS	REV. 7/85
APPROVED FOR DISTRIBUTION	TRANSITION W BEAM (STEEL POST) TO CONCRETE HALF BARRIER	DRAWING NO. C-10.30 Sheet 4 of 5

	DIMENSION	
BLOCK	A	B
1	0"	0"
2	$1\frac{1}{4}$"	$\frac{7}{8}$"
3	$2\frac{1}{2}$"	$1\frac{3}{4}$"
4	$3\frac{11}{16}$"	$2\frac{5}{8}$"
5	$4\frac{15}{16}$"	$3\frac{7}{16}$"

NOTE: Block 1 Is A $\frac{1}{4}$" x 12" x 14" Plate
Block 2 May Be A Solid 6" x 14" Plate Tapered In Thickness From $1\frac{1}{4}$" To $\frac{7}{8}$" Welded To $\frac{1}{4}$" x 12" x 14" Plate

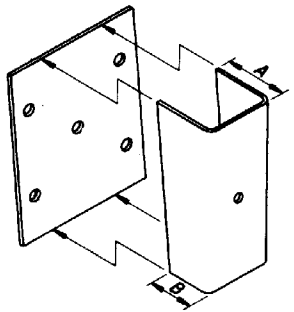

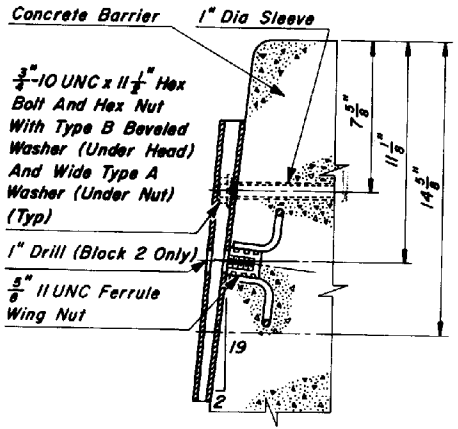

DETAIL F
SECTION THRU BLOCK AND ANCHORAGE

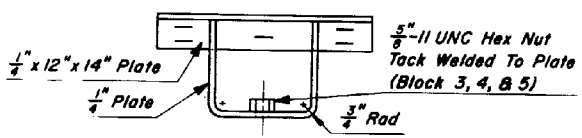

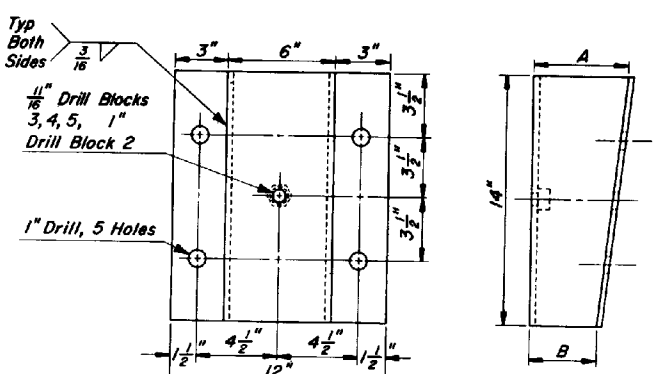

DETAIL G
BLOCK DETAILS

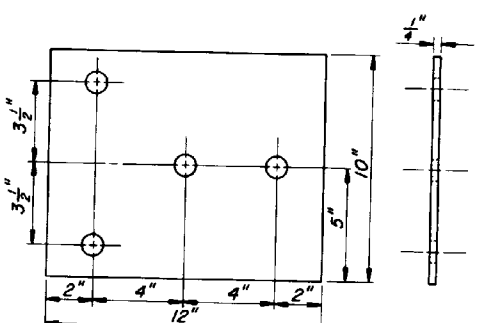

DETAIL H
TERMINAL CONNECTOR BACK PLATE

DESIGN APPROVED	STATE OF ARIZONA DEPARTMENT OF TRANSPORTATION DIVISION OF HIGHWAYS STANDARD DRAWINGS	REV. 7/85
APPROVED FOR DISTRIBUTION	TRANSITION W BEAM (STEEL POST) TO CONCRETE HALF BARRIER	DRAWING NO. C-10.30 Sheet 5 of 5

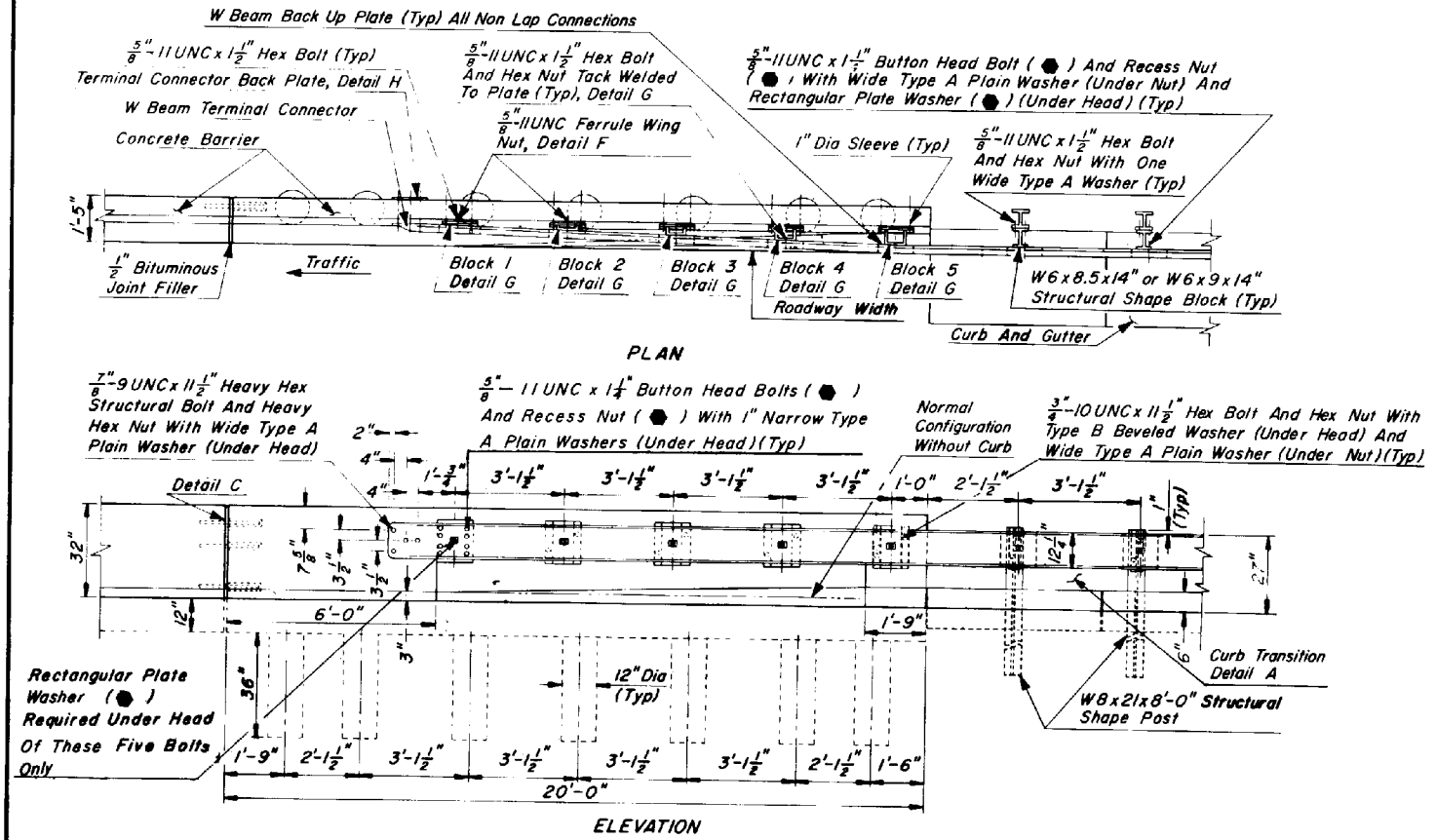

GENERAL NOTES

● - Indicates ARTBA designation.

DESIGN APPROVED	STATE OF ARIZONA DEPARTMENT OF TRANSPORTATION DIVISION OF HIGHWAYS STANDARD DRAWINGS	REV. 6/86
APPROVED FOR DISTRIBUTION	TRANSITION W BEAM (STEEL POST) TO CONCRETE HALF BARRIER, CURB INSTALLATION	DRAWING NO. C-10.35 Sheet 1 of 5

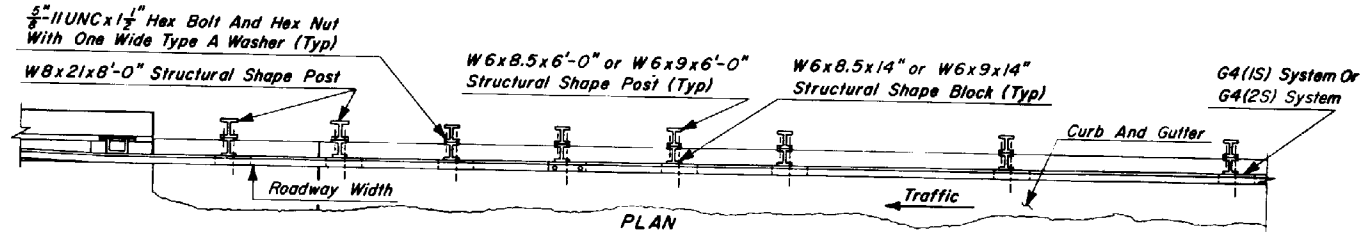

PLAN

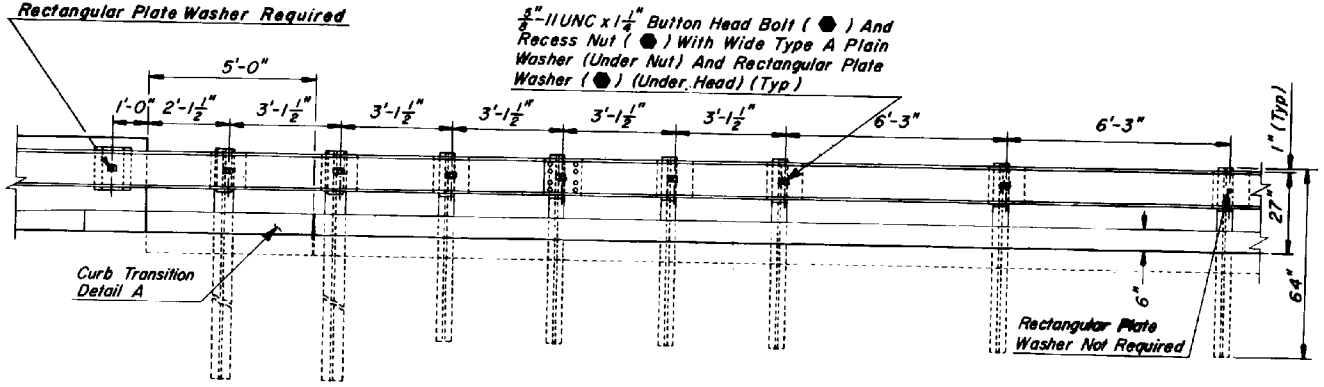

ELEVATION

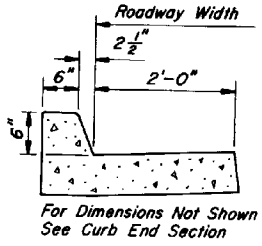

BARRIER END

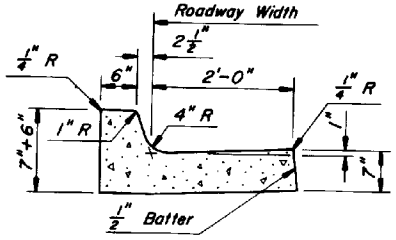

CURB END

CURB TRANSITION

DETAIL A

GENERAL NOTES

⬢-Indicates ARTBA designation.

DESIGN APPROVED	STATE OF ARIZONA DEPARTMENT OF TRANSPORTATION DIVISION OF HIGHWAYS STANDARD DRAWINGS	REV. 6/86
APPROVED FOR DISTRIBUTION	TRANSITION W BEAM (STEEL POST) TO CONCRETE HALF BARRIER, CURB INSTALLATION	DRAWING NO. C-10.35 Sheet 2 of 5

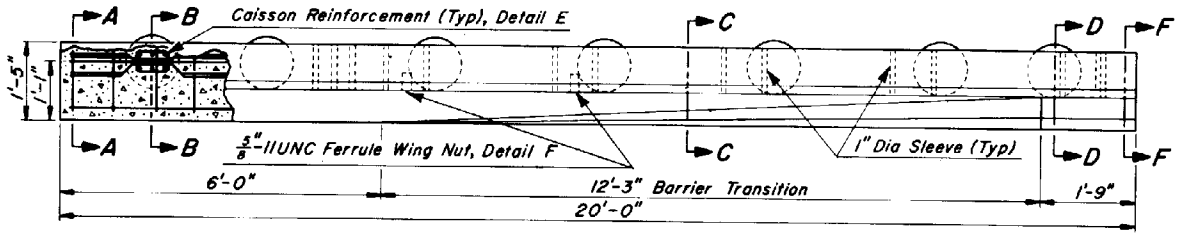

PLAN

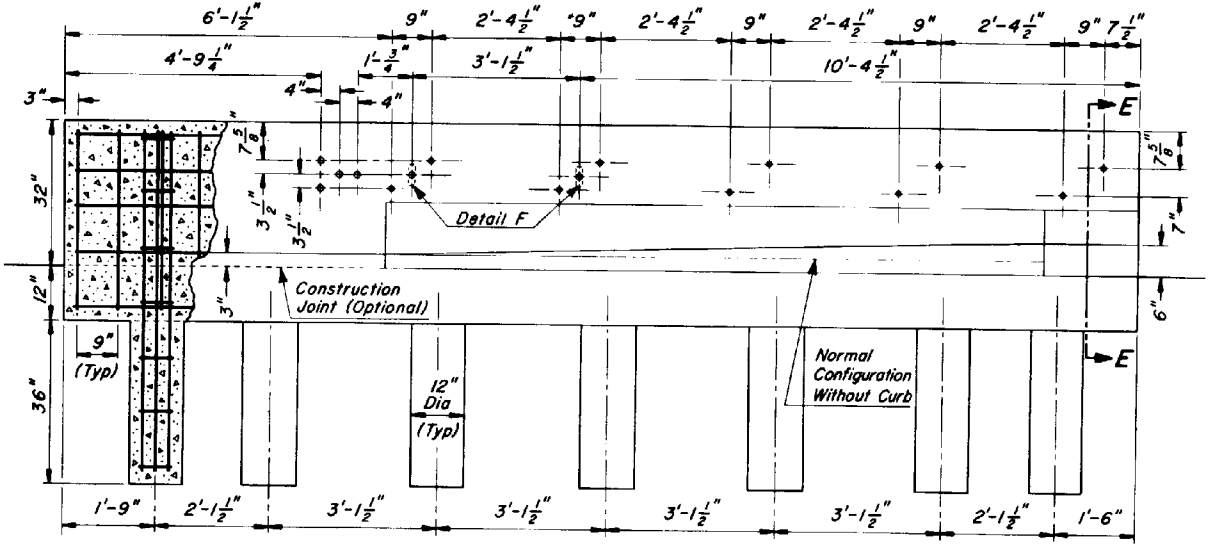

ELEVATION

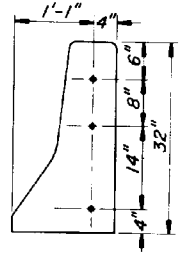

DOWEL LOCATIONS

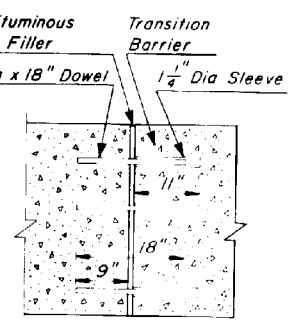

JOINT ASSEMBLY

DETAIL C

DOWEL INSTALLATION AND CONSTRUCTION JOINT

DESIGN APPROVED	STATE OF ARIZONA DEPARTMENT OF TRANSPORTATION DIVISION OF HIGHWAYS STANDARD DRAWINGS	REV. 6/86
APPROVED FOR DISTRIBUTION	TRANSITION W BEAM (STEEL POST) TO CONCRETE HALF BARRIER, CURB INSTALLATION	DRAWING NO. C-10.35 Sheet 3 of 5

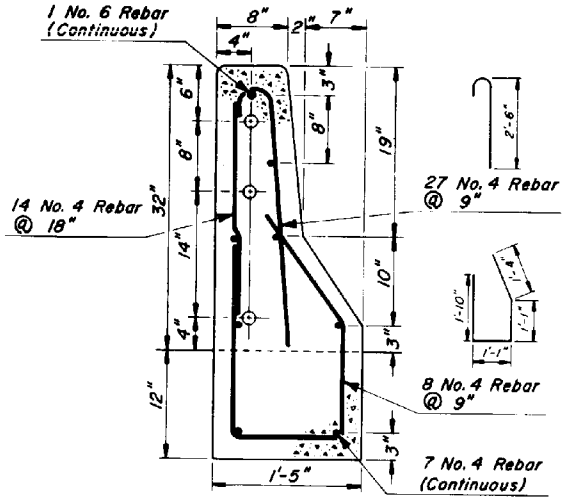

SECTION A-A

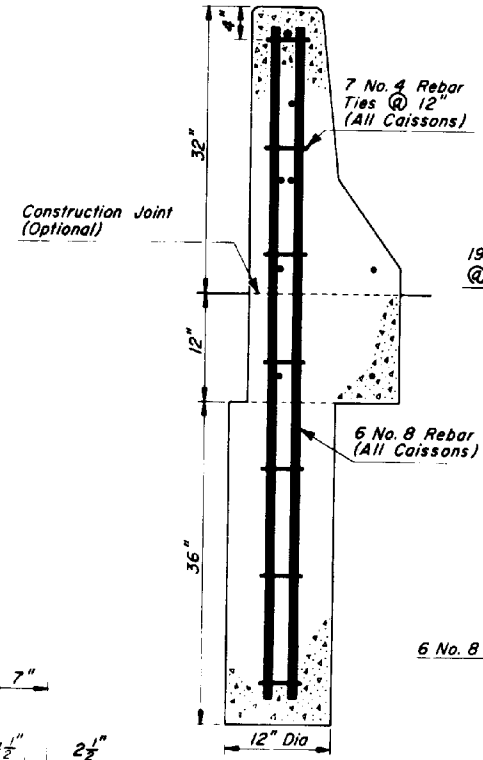

SECTION B-B

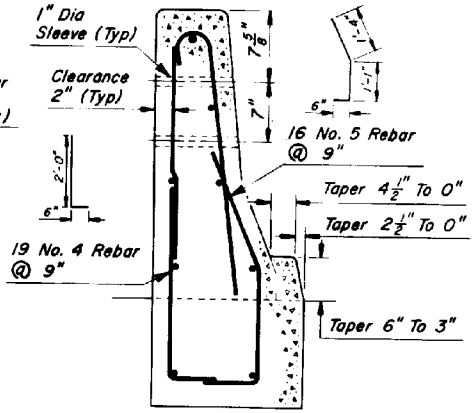

SECTION C-C

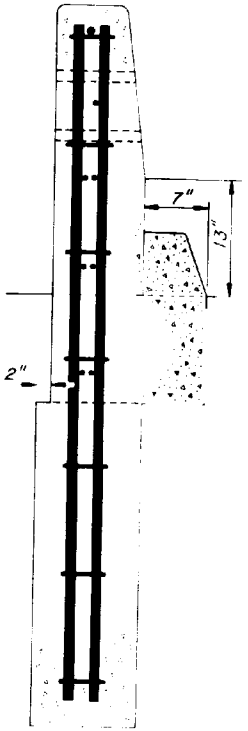

SECTION D-D

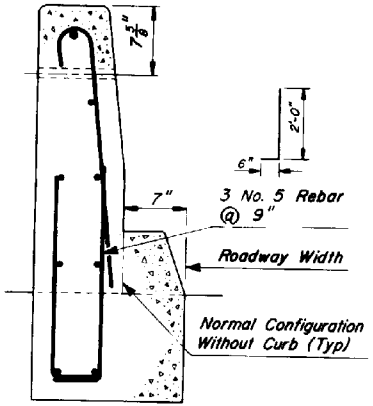

SECTION E-E

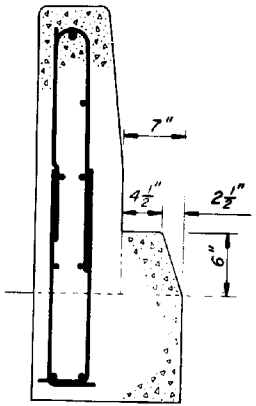

SECTION F-F

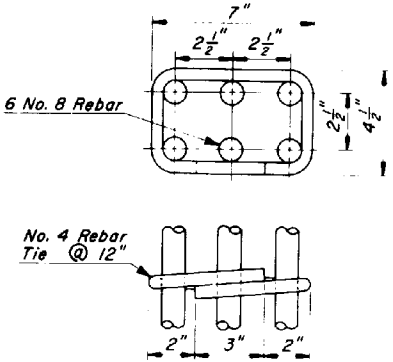

DETAIL E

CAISSON REINFORCEMENT

DESIGN APPROVED	STATE OF ARIZONA DEPARTMENT OF TRANSPORTATION DIVISION OF HIGHWAYS STANDARD DRAWINGS	REV. 7/85
APPROVED FOR DISTRIBUTION	TRANSITION W BEAM (STEEL POST) TO CONCRETE HALF BARRIER, CURB INSTALLATION	DRAWING NO. C-10.35 Sheet 4 of 5

	DIMENSION	
BLOCK	A	B
1	0"	0"
2	$1\frac{1}{4}$"	$\frac{7}{8}$"
3	$2\frac{1}{2}$"	$1\frac{3}{4}$"
4	$3\frac{11}{16}$"	$2\frac{5}{8}$"
5	$4\frac{13}{16}$"	$3\frac{7}{16}$"

NOTE: Block 1 Is A $\frac{1}{4}$" x 12" x 14" Plate Block 2 May Be A Solid 6" x 14" Plate Tapered In Thickness From $1\frac{1}{4}$" To $\frac{7}{8}$" Welded To $\frac{1}{4}$" x 12" x 14" Plate

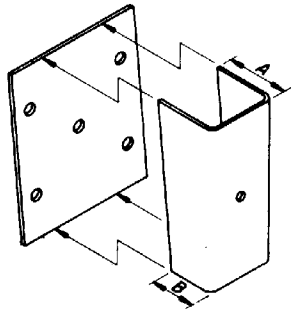

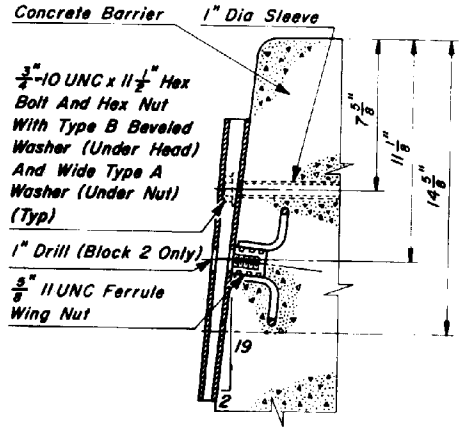

DETAIL F
SECTION THRU BLOCK AND ANCHORAGE

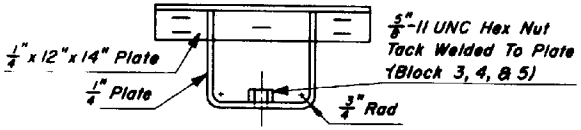

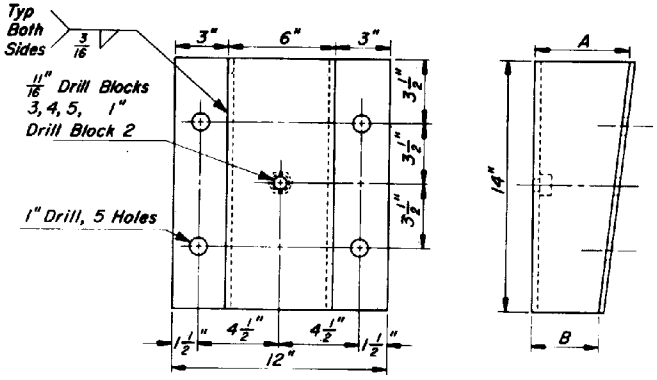

DETAIL G
BLOCK DETAILS

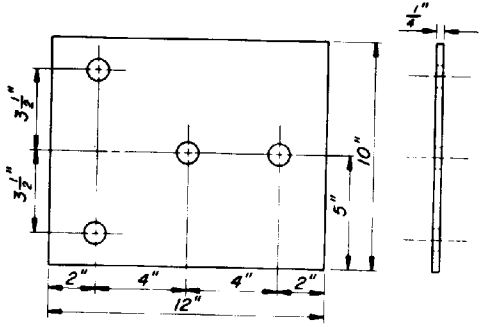

DETAIL H
TERMINAL CONNECTOR BACK PLATE

DESIGN APPROVED	STATE OF ARIZONA DEPARTMENT OF TRANSPORTATION DIVISION OF HIGHWAYS STANDARD DRAWINGS	REV. 7/85
APPROVED FOR DISTRIBUTION	TRANSITION W BEAM (STEEL POST) TO CONCRETE HALF BARRIER, CURB INSTALLATION	DRAWING NO. C-10.35 Sheet 5 of 5

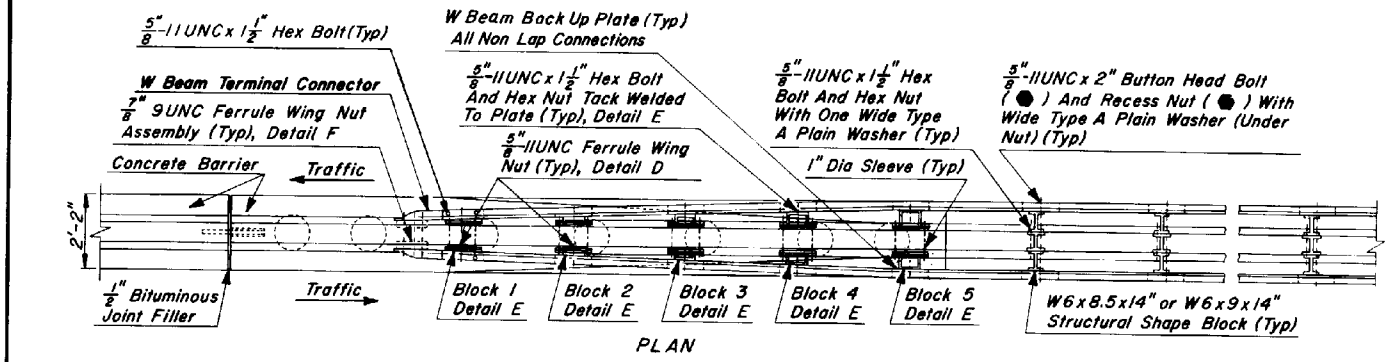

PLAN

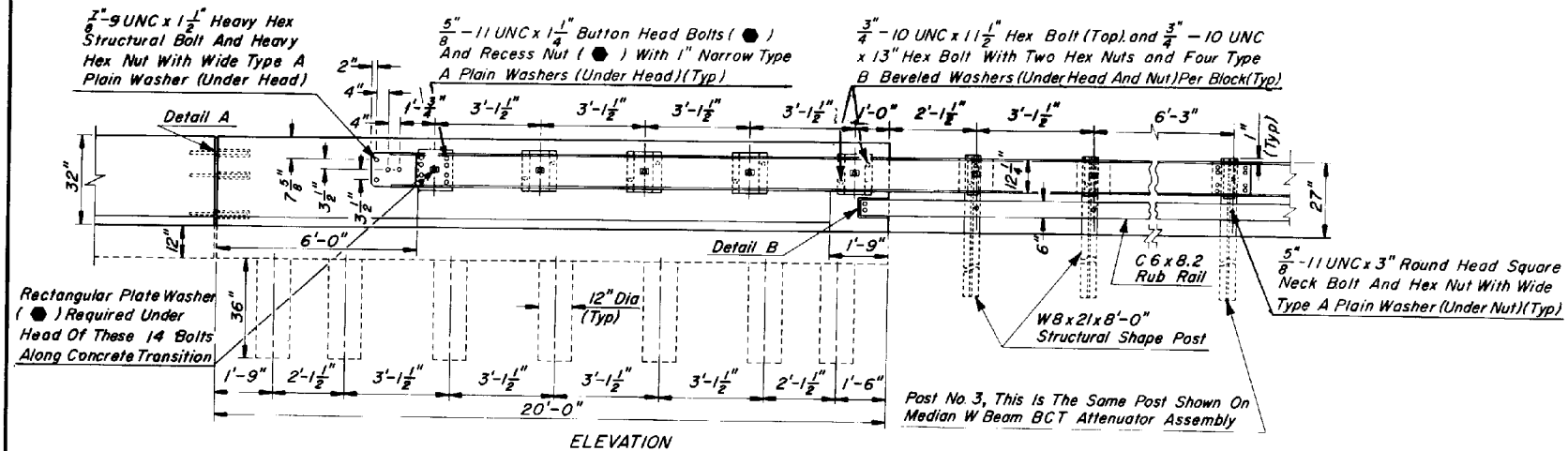

ELEVATION

GENERAL NOTES

●-Indicates ARTBA designation.

DESIGN APPROVED	STATE OF ARIZONA DEPARTMENT OF TRANSPORTATION DIVISION OF HIGHWAYS STANDARD DRAWINGS	REV. 6/86
APPROVED FOR DISTRIBUTION	TRANSITION W BEAM TO CONCRETE MEDIAN BARRIER	DRAWING NO. C-10.40 Sheet 1 of 4

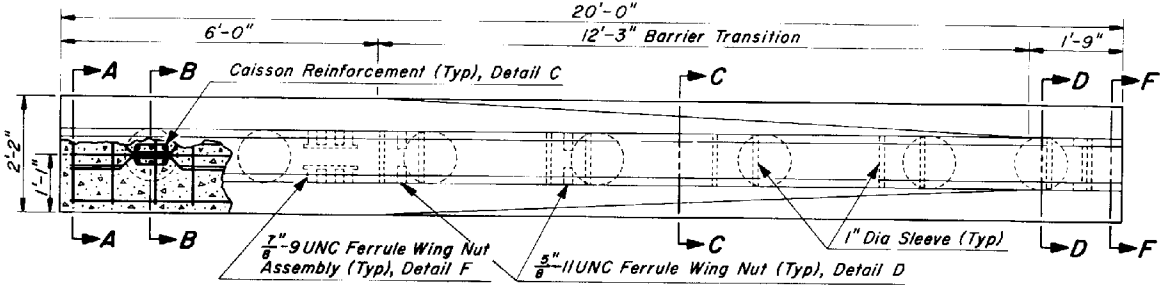

PLAN

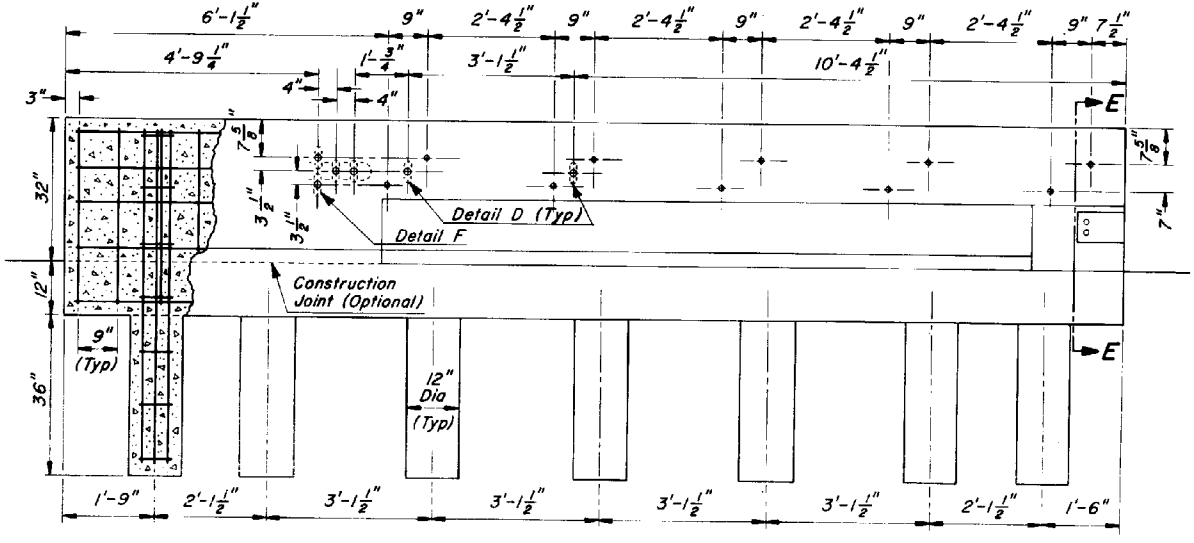

ELEVATION

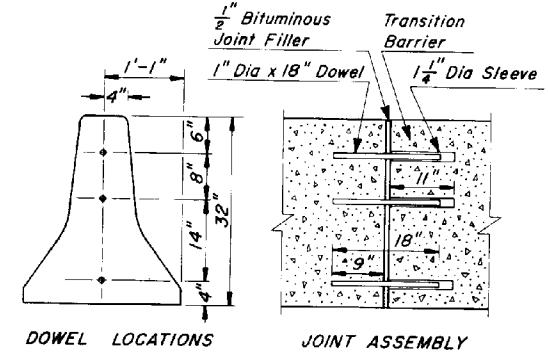

DOWEL LOCATIONS

JOINT ASSEMBLY

DETAIL A

DOWEL INSTALLATION AND CONSTRUCTION JOINT

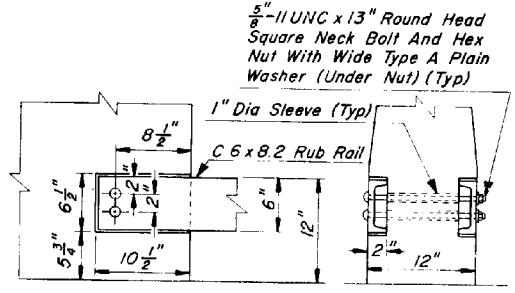

DETAIL B

RUB RAIL ANCHOR

DESIGN APPROVED	STATE OF ARIZONA DEPARTMENT OF TRANSPORTATION DIVISION OF HIGHWAYS STANDARD DRAWINGS	REV. 6/86
APPROVED FOR DISTRIBUTION	TRANSITION W BEAM TO CONCRETE MEDIAN BARRIER	DRAWING NO. C-10.40 Sheet 2 of 4

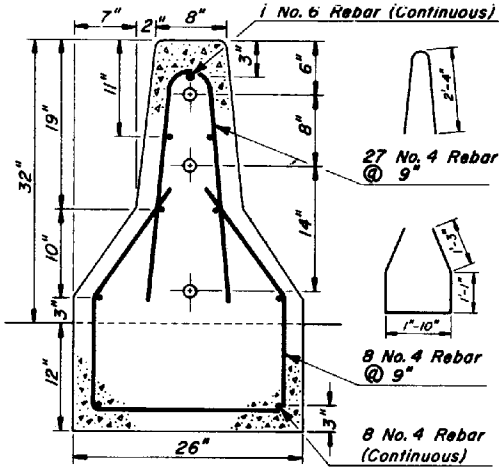

SECTION A-A

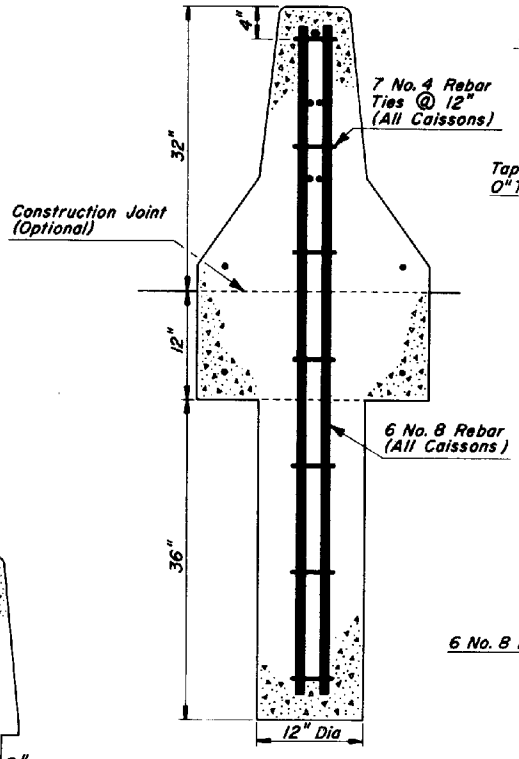

SECTION B-B

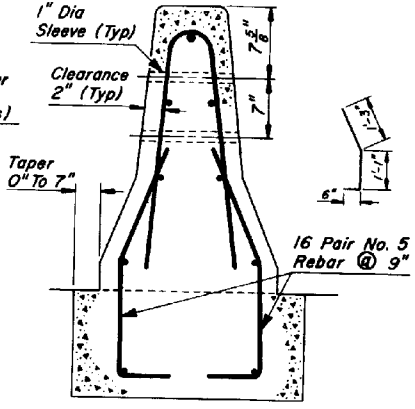

SECTION C-C

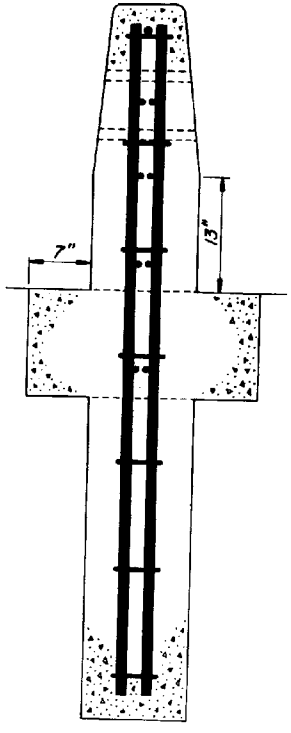

SECTION D-D

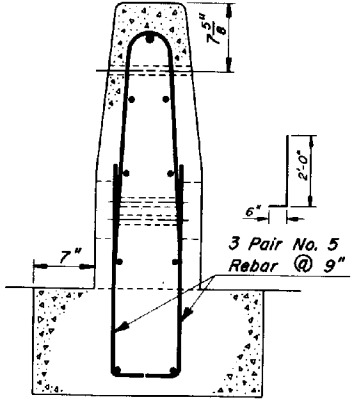

SECTION E-E

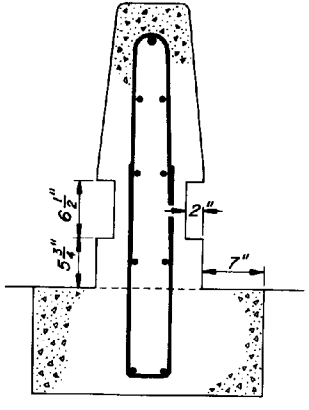

SECTION F-F

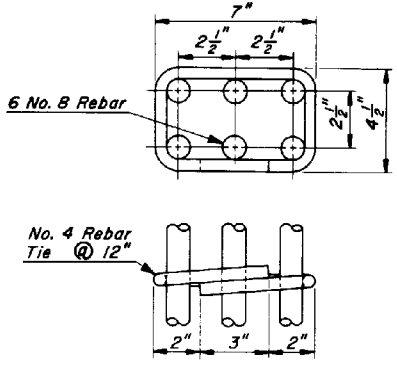

DETAIL C

CAISSON REINFORCEMENT

DESIGN APPROVED	STATE OF ARIZONA DEPARTMENT OF TRANSPORTATION DIVISION OF HIGHWAYS STANDARD DRAWINGS	REV. 7/85
APPROVED FOR DISTRIBUTION	TRANSITION W BEAM TO CONCRETE MEDIAN BARRIER	DRAWING NO. C-10.40 Sheet 3 of 4

	DIMENSION	
BLOCK	A	B
1	0"	0"
2	$1\frac{1}{4}$"	$\frac{7}{8}$"
3	$2\frac{1}{2}$"	$1\frac{3}{4}$"
4	$3\frac{11}{16}$"	$2\frac{5}{8}$"
5	$4\frac{15}{16}$"	$3\frac{7}{16}$"

NOTE: Block 1 Is A $\frac{1}{4}$" x 12" x 14" Plate
Block 2 May Be A Solid 6" x 14" Plate Tapered In Thickness From $1\frac{1}{4}$" To $\frac{7}{8}$" Welded To $\frac{1}{4}$" x 12" x 14" Plate

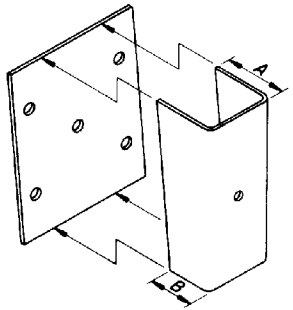

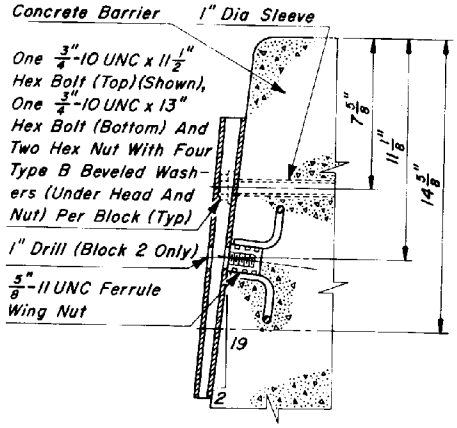

DETAIL D
SECTION THRU BLOCK AND ANCHORAGE

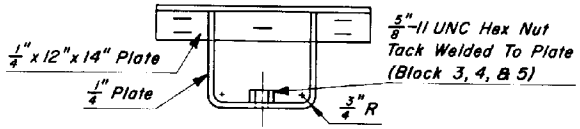

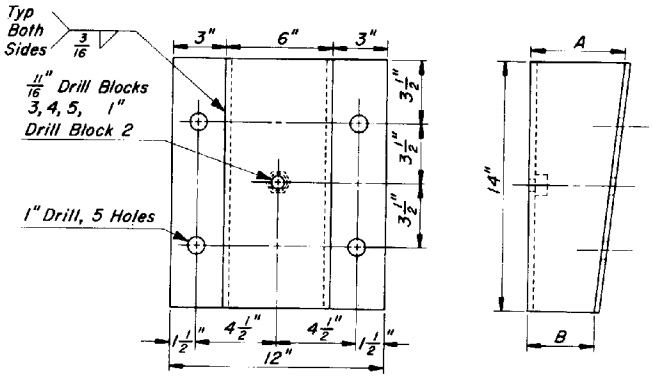

DETAIL E
BLOCK DETAILS

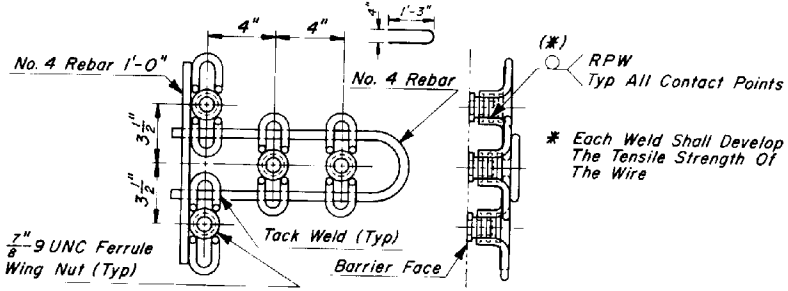

DETAIL F
TERMINAL CONNECTOR ANCHOR

DESIGN APPROVED	STATE OF ARIZONA DEPARTMENT OF TRANSPORTATION DIVISION OF HIGHWAYS STANDARD DRAWINGS	REV. 7/85
APPROVED FOR DISTRIBUTION	TRANSITION W BEAM TO CONCRETE MEDIAN BARRIER	DRAWING NO. C-10.40 Sheet 4 of 4

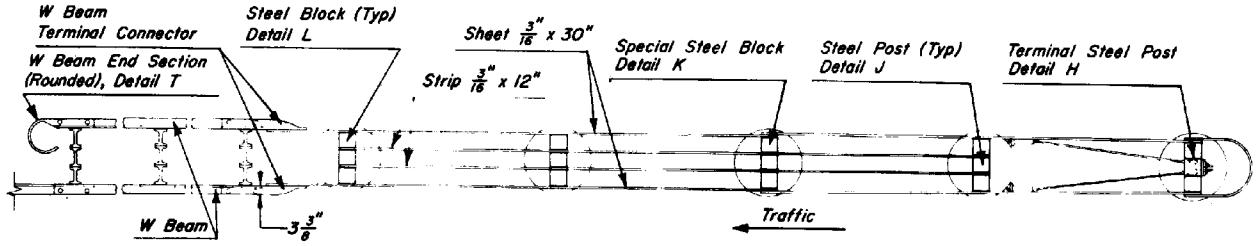

PLAN

GENERAL NOTES

●-Indicates ARTBA designation.

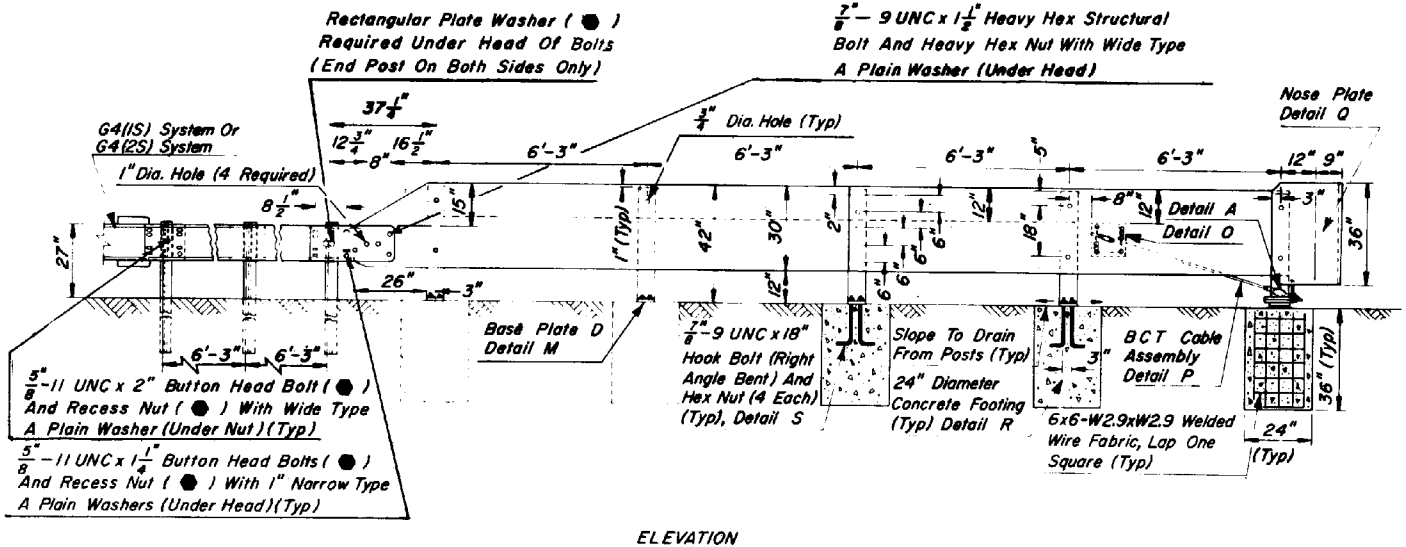

ELEVATION

ONE WAY TRAFFIC-RIGHT SIDE OF ROADWAY
OR TWO WAY TRAFFIC

DESIGN APPROVED	STATE OF ARIZONA DEPARTMENT OF TRANSPORTATION DIVISION OF HIGHWAYS STANDARD DRAWINGS	REV. 7/85
APPROVED FOR DISTRIBUTION	W BEAM BCT ATTENUATOR ASSEMBLY	DRAWING NO. C-10.45 Sheet 1 of 5

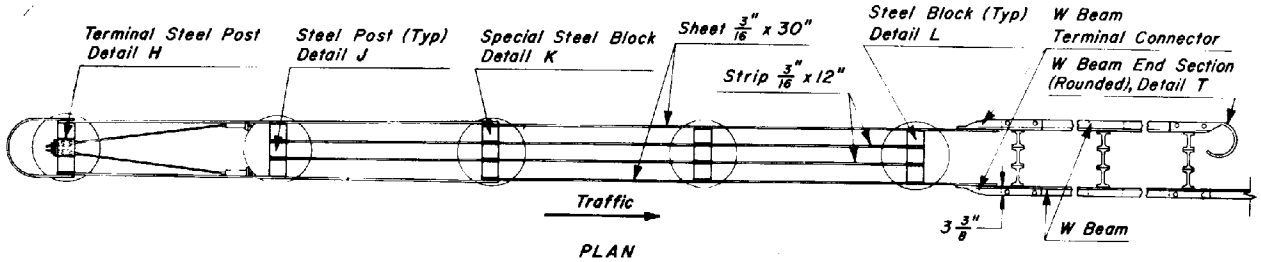

PLAN

GENERAL NOTES

●-Indicates ARTBA designation.

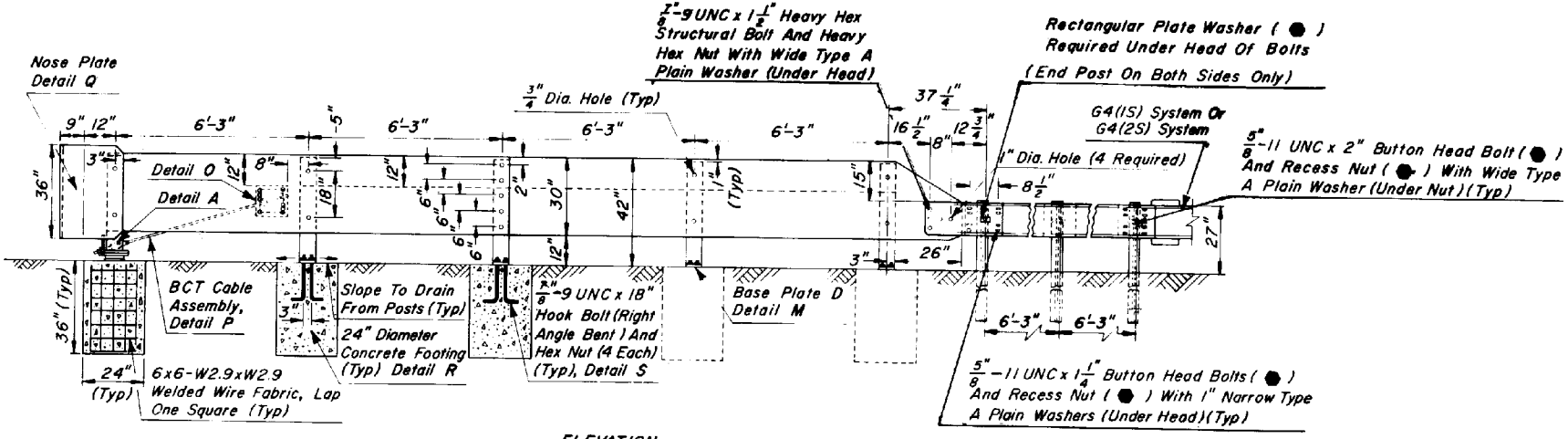

ELEVATION

ONE WAY TRAFFIC-LEFT SIDE OF ROADWAY

DESIGN APPROVED	STATE OF ARIZONA DEPARTMENT OF TRANSPORTATION DIVISION OF HIGHWAYS STANDARD DRAWINGS	REV. 7/85
APPROVED FOR DISTRIBUTION	W BEAM BCT ATTENUATOR ASSEMBLY	DRAWING NO. C-10.45 Sheet 2 of 5

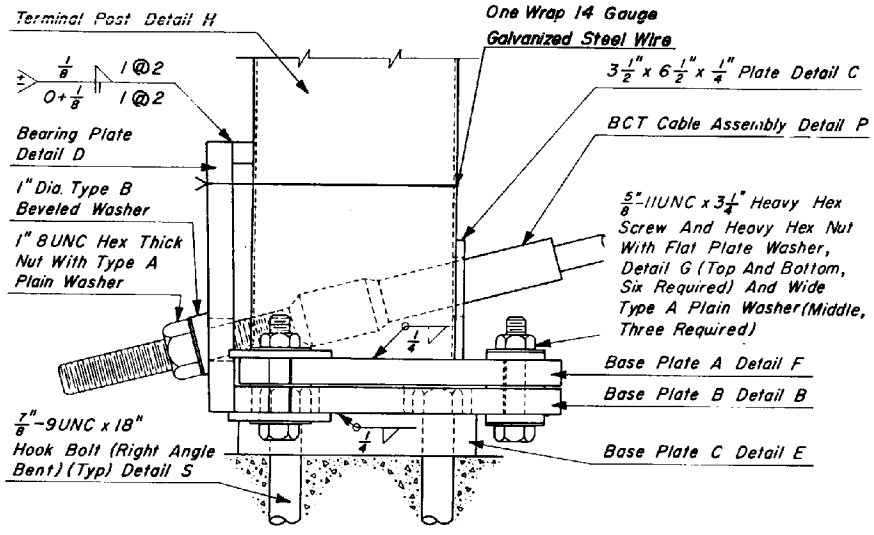

DETAIL A

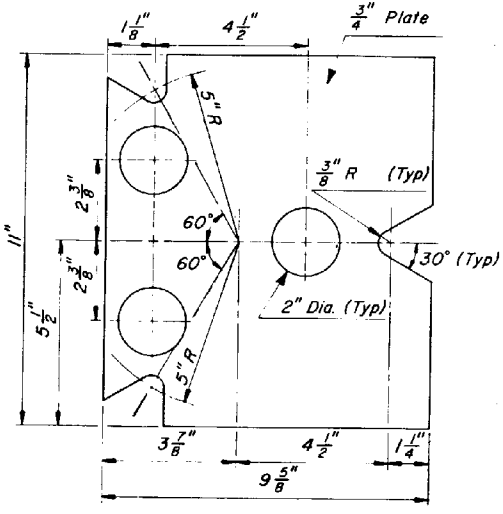

DETAIL B (BASE PLATE B)

GENERAL NOTES

1. BCT Cable Assembly shall be tightened to remove slack.
2. 5/8"-11UNC x 3 1/4" Heavy Hex Screw, connecting Base Plate A to Base Plate B, shall be torqued to 170 ft. lbs.
3. To ensure that the BCT (Steel) Bearing Plate remains in position one wrap of 14 Gauge Galvanized Steel Wire shall be wrapped around the BCT Terminal Post (Steel) and near the top of the plate.

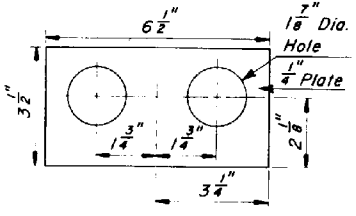

DETAIL C

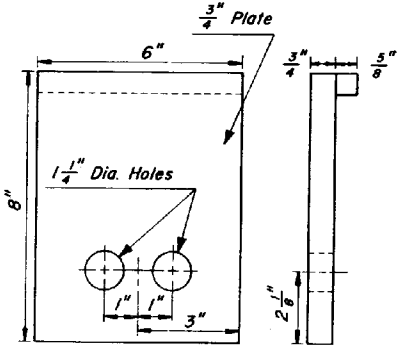

DETAIL D
(BEARING PLATE)

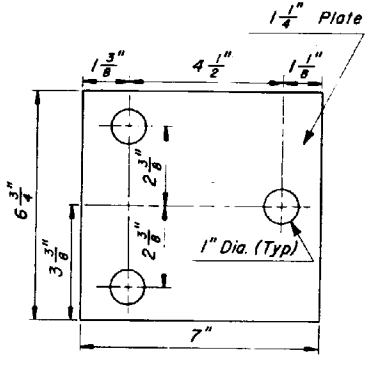

DETAIL E
(BASE PLATE C)

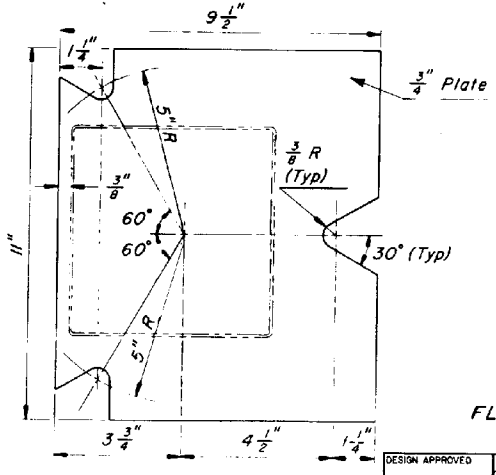

DETAIL F (BASE PLATE A)

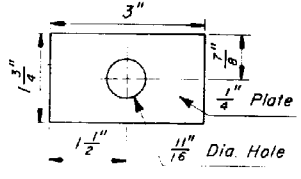

DETAIL G
FLAT PLATE WASHER

DESIGN APPROVED	STATE OF ARIZONA DEPARTMENT OF TRANSPORTATION DIVISION OF HIGHWAYS STANDARD DRAWINGS	REV. 6/86
APPROVED FOR DISTRIBUTION	W BEAM BCT ATTENUATOR ASSEMBLY	DRAWING NO. C-10.45 Sheet 3 of 5

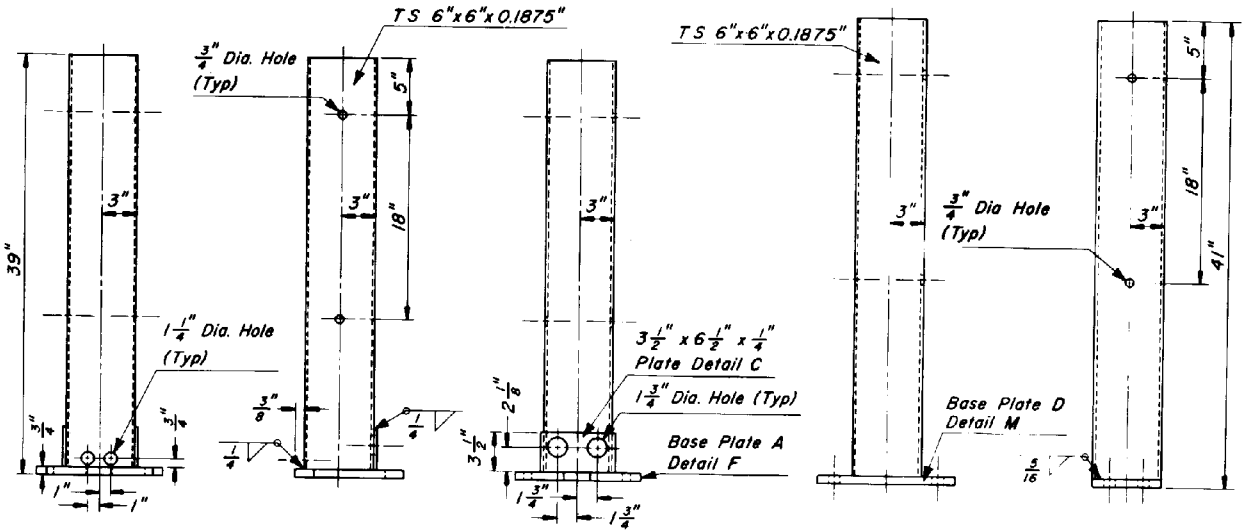

DETAIL H
(TERMINAL STEEL POST)

DETAIL J
(STEEL POST)

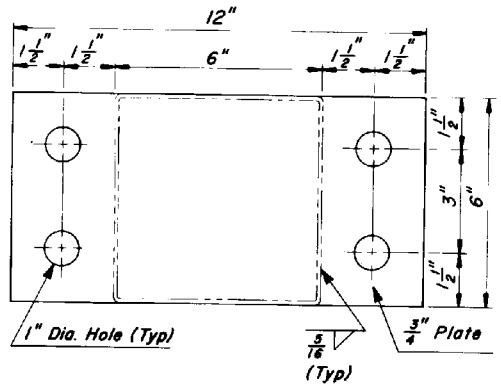

DETAIL M
(BASE PLATE D)

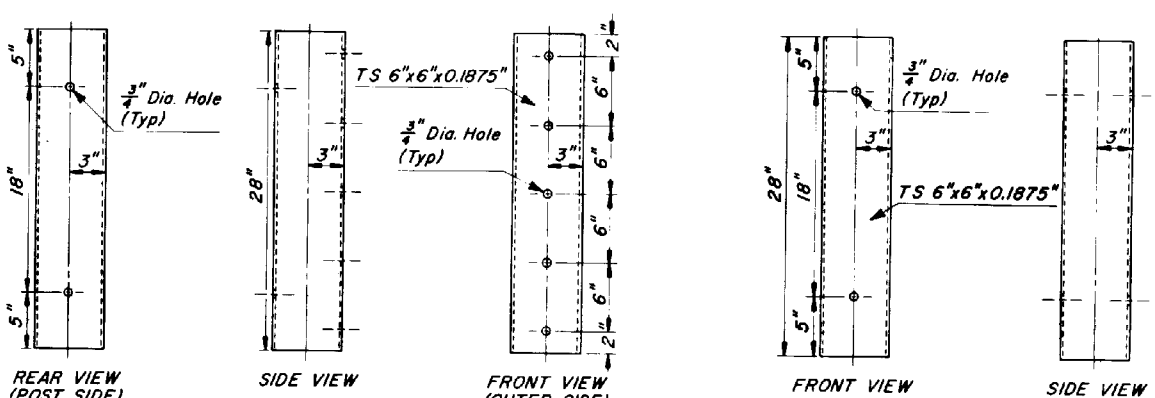

DETAIL K
(SPECIAL STEEL BLOCK)

DETAIL L
(STEEL BLOCK)

DESIGN APPROVED	STATE OF ARIZONA DEPARTMENT OF TRANSPORTATION DIVISION OF HIGHWAYS STANDARD DRAWINGS	REV. 7/85
APPROVED FOR DISTRIBUTION	W BEAM BCT ATTENUATOR ASSEMBLY	DRAWING NO. C-10.45 Sheet 4 of 5

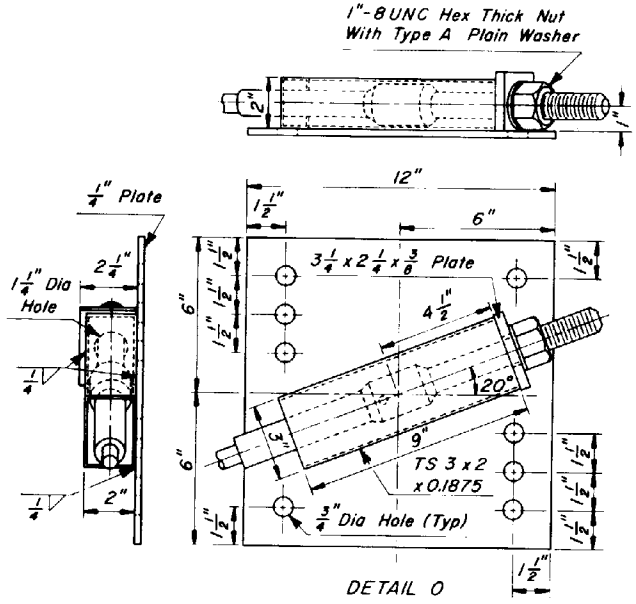

DETAIL O
(BCT PLATE ASSEMBLY)

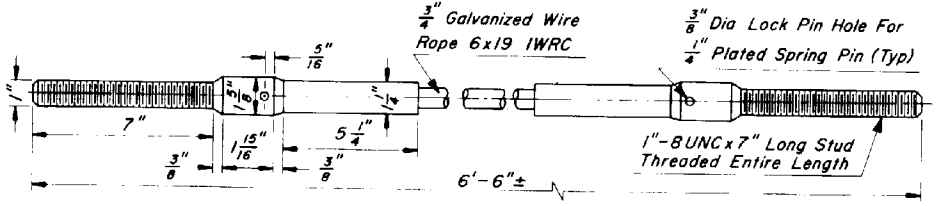

DETAIL P
(BCT CABLE ASSEMBLY)

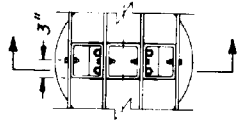

PLAN

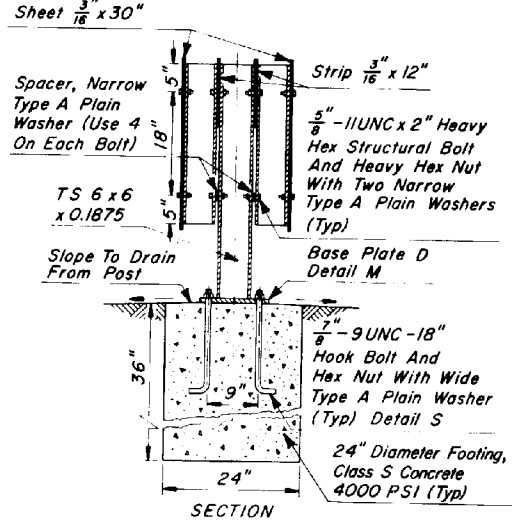

DETAIL R
(POST AND BLOCK ATTACHMENT)

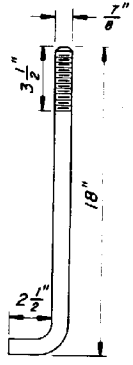

DETAIL S
7/8"-9UNC-18"
HOOK BOLT
(RIGHT ANGLE BENT)

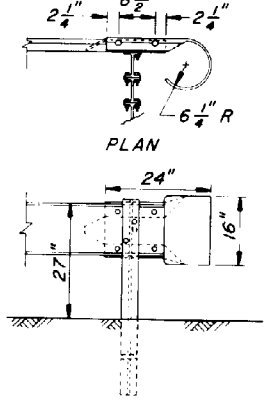

PLAN

ELEVATION

DETAIL T
(W BEAM ROUNDED
END SECTION)

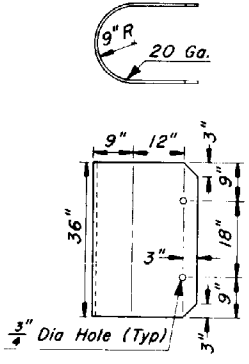

DETAIL Q
(NOSE PLATE)

DESIGN APPROVED	STATE OF ARIZONA DEPARTMENT OF TRANSPORTATION DIVISION OF HIGHWAYS STANDARD DRAWINGS	REV. 7/85
APPROVED FOR DISTRIBUTION	W BEAM BCT ATTENUATOR ASSEMBLY	DRAWING NO. C-10.45 Sheet 5 of 5

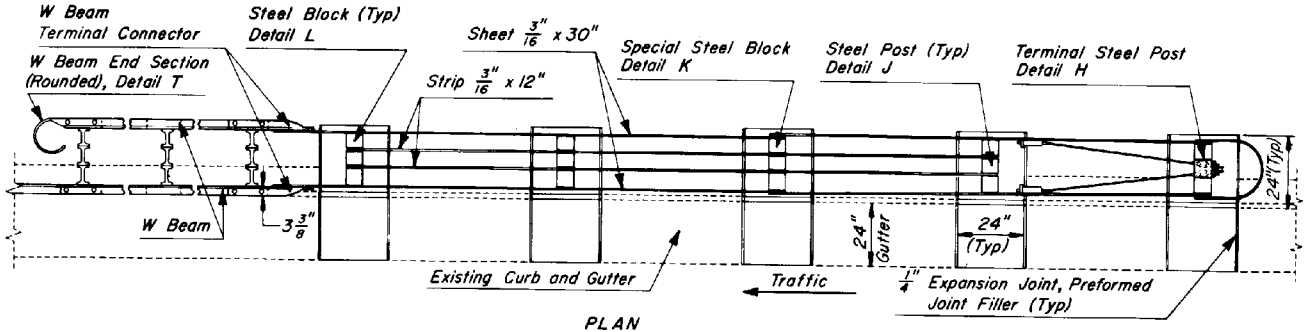

PLAN

GENERAL NOTES

⬢-Indicates ARTBA designation.

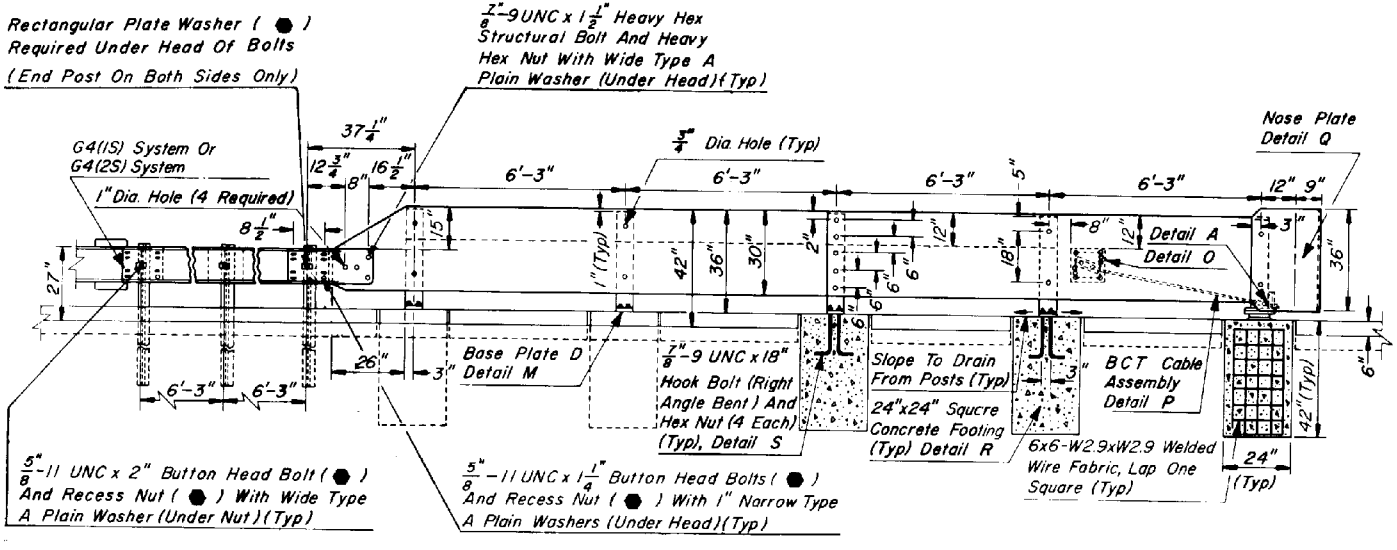

ELEVATION

ONE WAY TRAFFIC-RIGHT SIDE OF ROADWAY
OR TWO WAY TRAFFIC

DESIGN APPROVED	STATE OF ARIZONA DEPARTMENT OF TRANSPORTATION DIVISION OF HIGHWAYS STANDARD DRAWINGS	REV. 7/85
APPROVED FOR DISTRIBUTION	W BEAM BCT ATTENUATOR ASSEMBLY, CURB INSTALLATION	DRAWING NO. C-10.50 Sheet 1 of 5

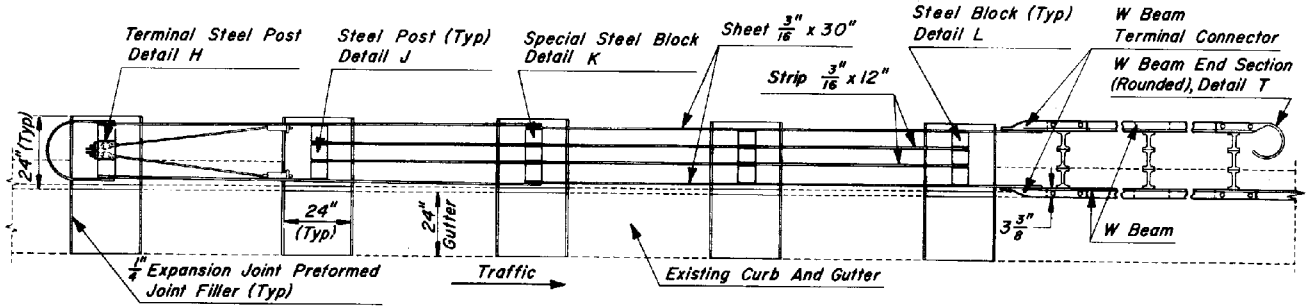

PLAN

GENERAL NOTES

●–Indicates ARTBA designation.

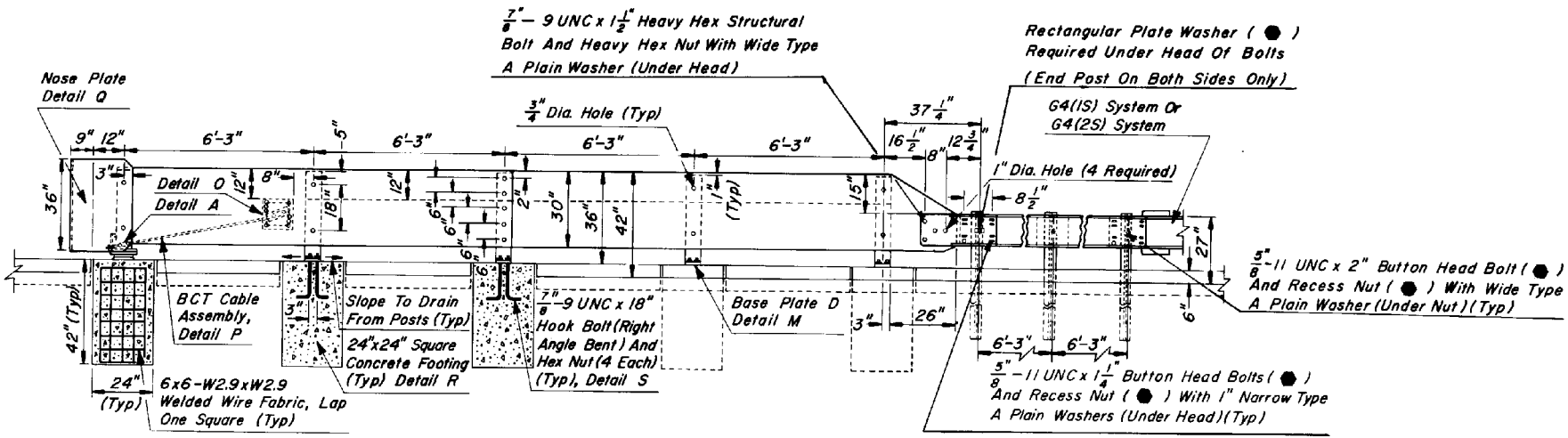

ELEVATION

ONE WAY TRAFFIC–LEFT SIDE OF ROADWAY

DESIGN APPROVED	STATE OF ARIZONA DEPARTMENT OF TRANSPORTATION DIVISION OF HIGHWAYS STANDARD DRAWINGS	REV. 6/86
APPROVED FOR DISTRIBUTION	W BEAM BCT ATTENUATOR ASSEMBLY, CURB INSTALLATION	DRAWING NO. C-10.50 Sheet 2 of 5

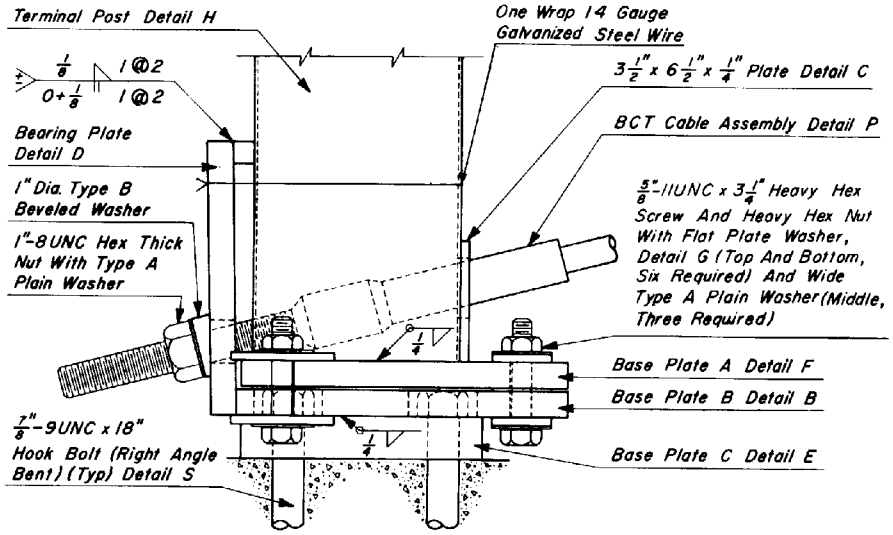

DETAIL A

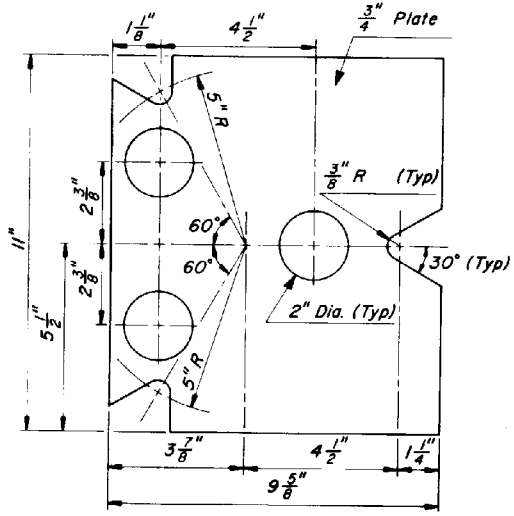

DETAIL B (BASE PLATE B)

GENERAL NOTES

1. BCT Cable Assembly shall be tightened to remove slack.
2. 5/8"-11UNC x 3 1/4" Heavy Hex Screw, connecting Base Plate A to Base Plate B, shall be torqued to 170 ft. lbs.
3. To ensure that the BCT (Steel) Bearing Plate remains in position one wrap of 14 Gauge Galvanized Steel Wire shall be wrapped around the BCT Terminal Post (Steel) and near the top of the plate.

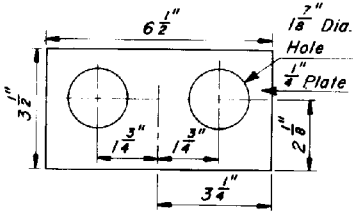

DETAIL C

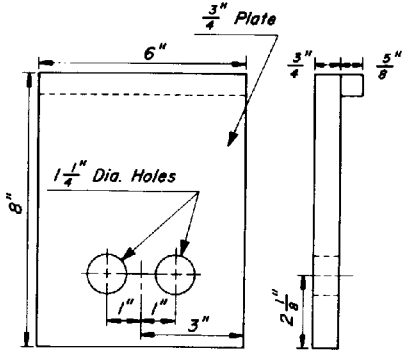

DETAIL D
(BEARING PLATE)

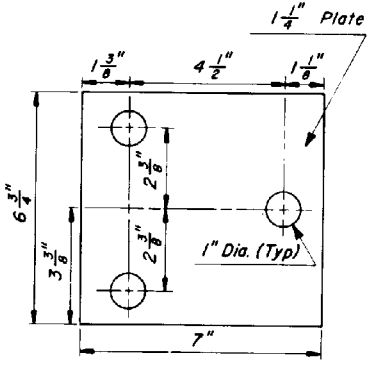

DETAIL E
(BASE PLATE C)

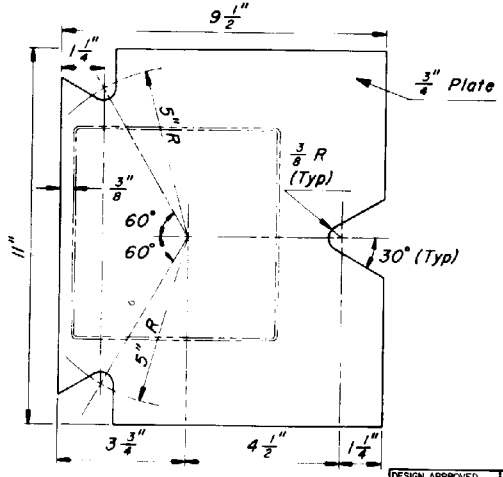

DETAIL F (BASE PLATE A)

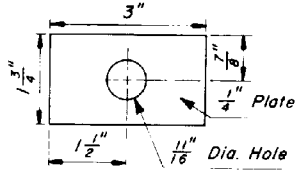

DETAIL G
FLAT PLATE WASHER

DESIGN APPROVED	STATE OF ARIZONA DEPARTMENT OF TRANSPORTATION DIVISION OF HIGHWAYS STANDARD DRAWINGS	REV. 6/86
APPROVED FOR DISTRIBUTION	W BEAM BCT ATTENUATOR ASSEMBLY CURB INSTALLATION	DRAWING NO. C-10.50 Sheet 3 of 5

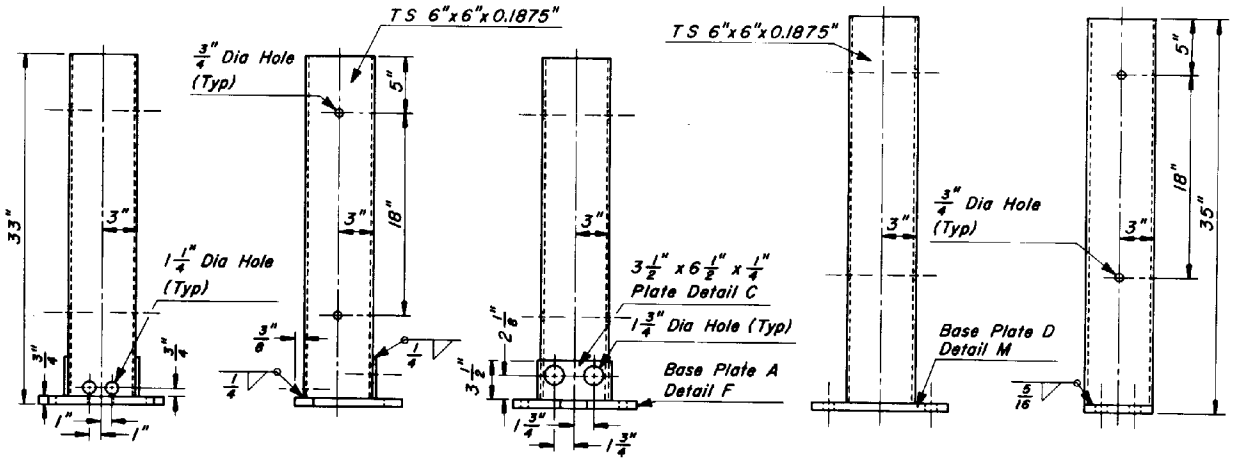

DETAIL H
(TERMINAL STEEL POST)

DETAIL J
(STEEL POST)

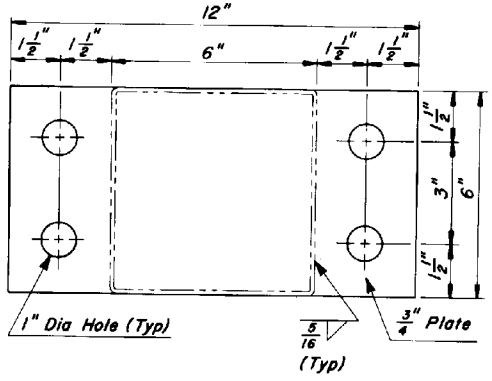

DETAIL M
(BASE PLATE D)

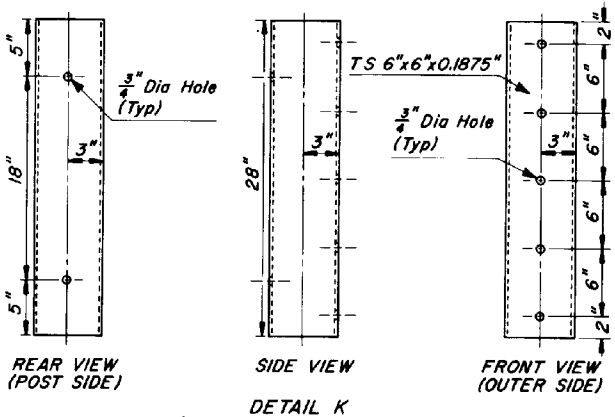

DETAIL K
(SPECIAL STEEL BLOCK)

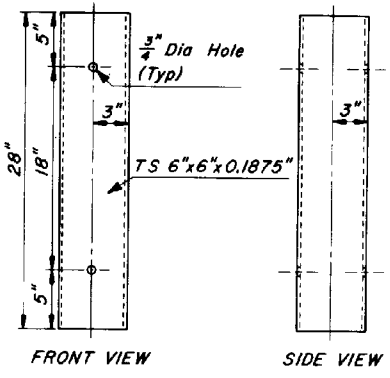

DETAIL L
(STEEL BLOCK)

DESIGN APPROVED	STATE OF ARIZONA DEPARTMENT OF TRANSPORTATION DIVISION OF HIGHWAYS STANDARD DRAWINGS	REV. 7/85
APPROVED FOR DISTRIBUTION	W BEAM BCT ATTENUATOR ASSEMBLY, CURB INSTALLATION	DRAWING NO. C-10.50 Sheet 4 of 5

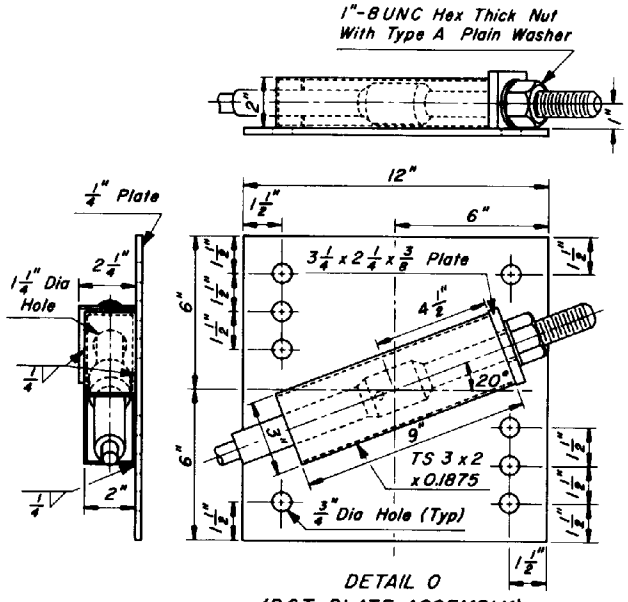

DETAIL O
(BCT PLATE ASSEMBLY)

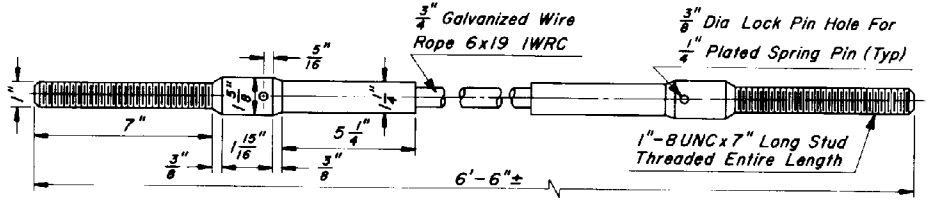

DETAIL P
(BCT CABLE ASSEMBLY)

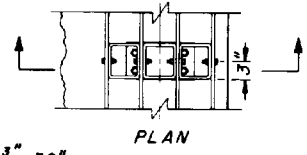

PLAN

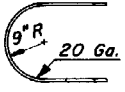

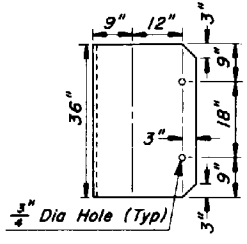

DETAIL Q
(NOSE PLATE)

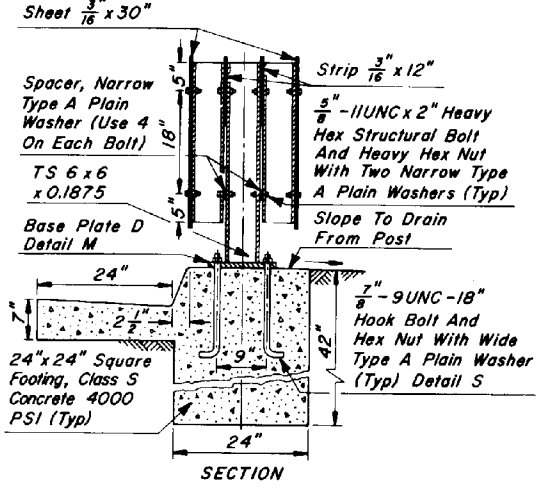

DETAIL R
(POST AND BLOCK ATTACHMENT)

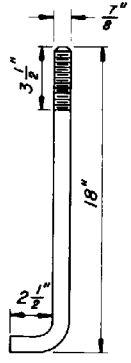

DETAIL S
7/8"-9UNC-18"
HOOK BOLT
(RIGHT ANGLE BENT)

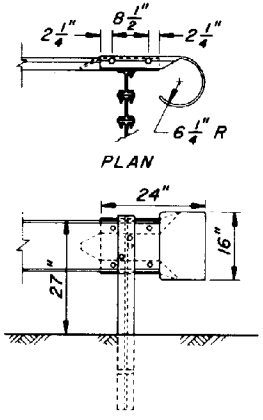

DETAIL T
(W BEAM ROUNDED
END SECTION)

DESIGN APPROVED	STATE OF ARIZONA DEPARTMENT OF TRANSPORTATION DIVISION OF HIGHWAYS STANDARD DRAWINGS	REV. 7/85
APPROVED FOR DISTRIBUTION	W BEAM BCT ATTENUATOR ASSEMBLY, CURB INSTALLATION	DRAWING NO. C-10.50 Sheet 5 of 5

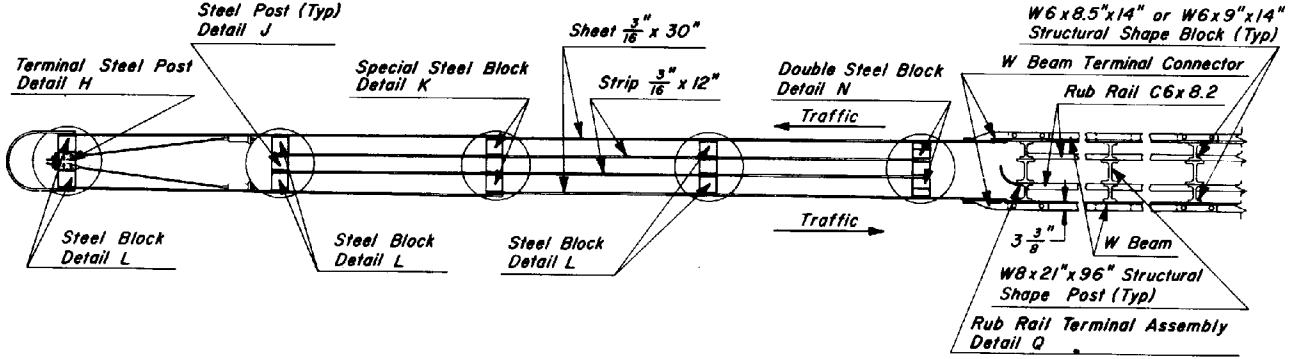

PLAN

GENERAL NOTES

●—Indicates ARTBA designation.

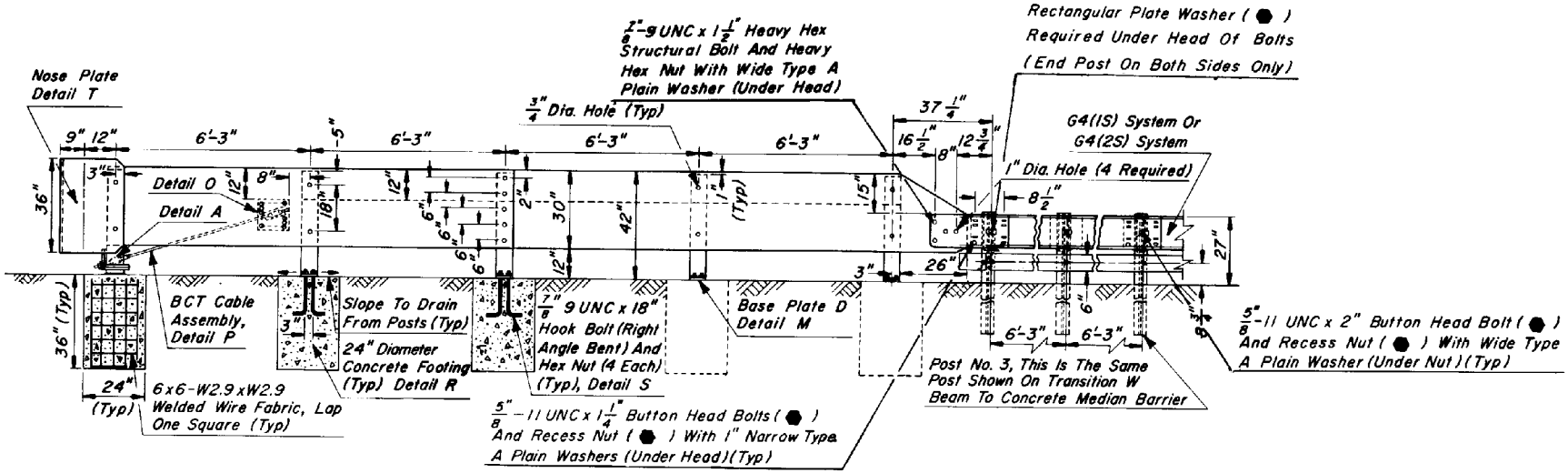

ELEVATION

DESIGN APPROVED	STATE OF ARIZONA DEPARTMENT OF TRANSPORTATION DIVISION OF HIGHWAYS STANDARD DRAWINGS	REV. 7/85
APPROVED FOR DISTRIBUTION	MEDIAN W BEAM BCT ATTENUATOR ASSEMBLY	DRAWING NO. C-10.55 Sheet 1 of 4

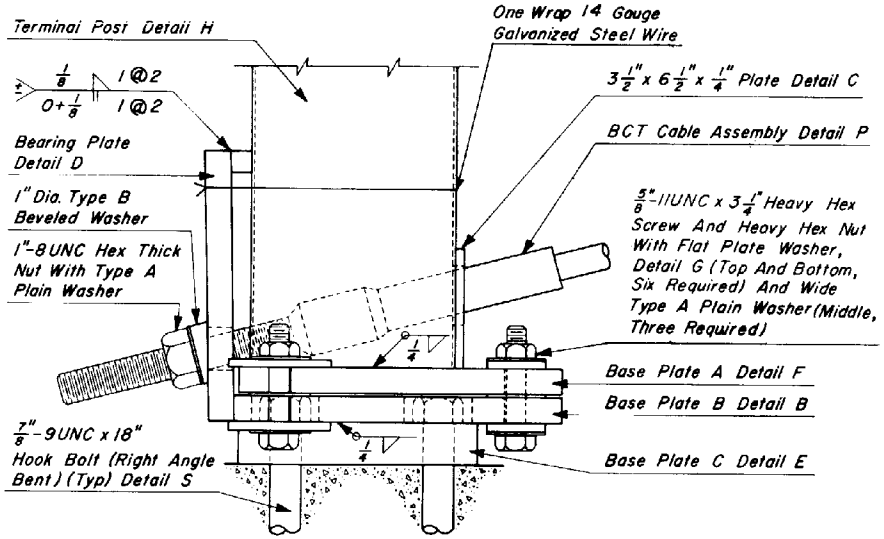

DETAIL A

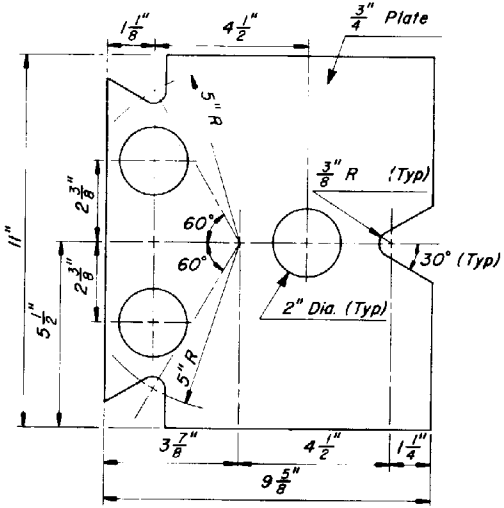

DETAIL B (BASE PLATE B)

GENERAL NOTES

1. BCT Cable Assembly shall be tightened to remove slack.
2. 5/8"-11UNC x 3 1/4" Heavy Hex Screw, connecting Base Plate A to Base Plate B, shall be torqued to 170 ft. lbs.
3. To ensure that the BCT (Steel) Bearing Plate remains in position one wrap of 14 Gauge Galvanized Steel Wire shall be wrapped around the BCT Terminal Post (Steel) and near the top of the plate.

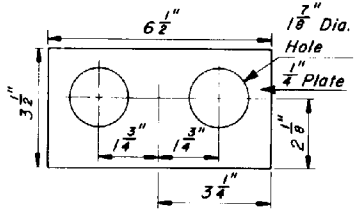

DETAIL C

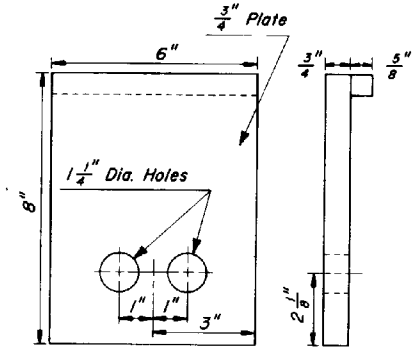

DETAIL D
(BEARING PLATE)

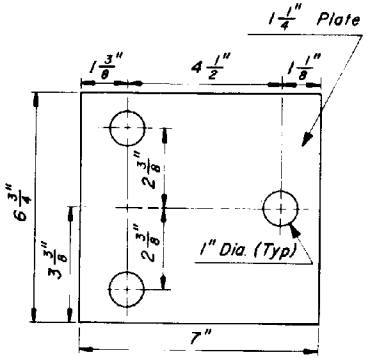

DETAIL E
(BASE PLATE C)

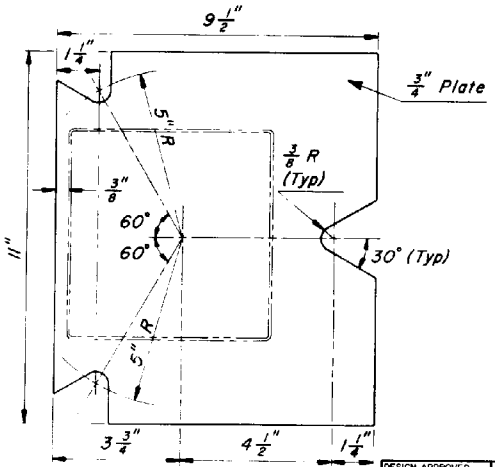

DETAIL F (BASE PLATE A)

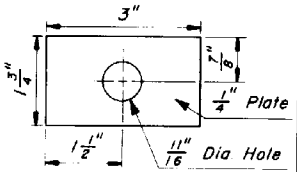

DETAIL G
FLAT PLATE WASHER

DESIGN APPROVED	STATE OF ARIZONA DEPARTMENT OF TRANSPORTATION DIVISION OF HIGHWAYS STANDARD DRAWINGS	REV. 6/86
APPROVED FOR DISTRIBUTION	MEDIAN W BEAM BCT ATTENUATOR ASSEMBLY	DRAWING NO. C-10.55 Sheet 2 of 4

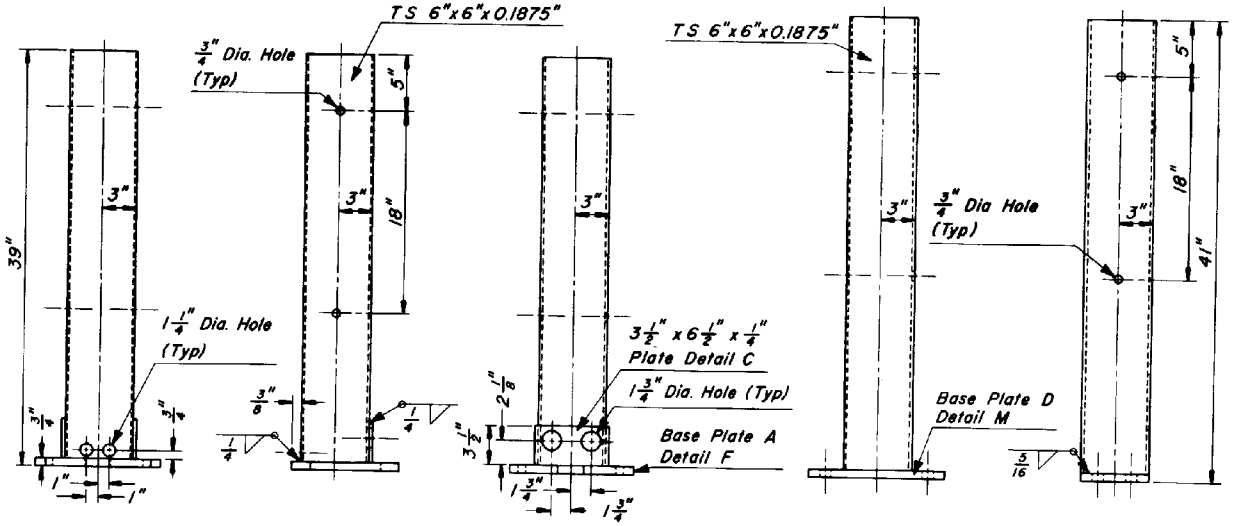

DETAIL H
(TERMINAL STEEL POST)

DETAIL J
(STEEL POST)

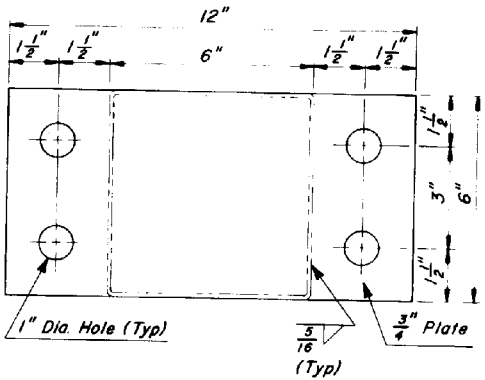

DETAIL M
(BASE PLATE D)

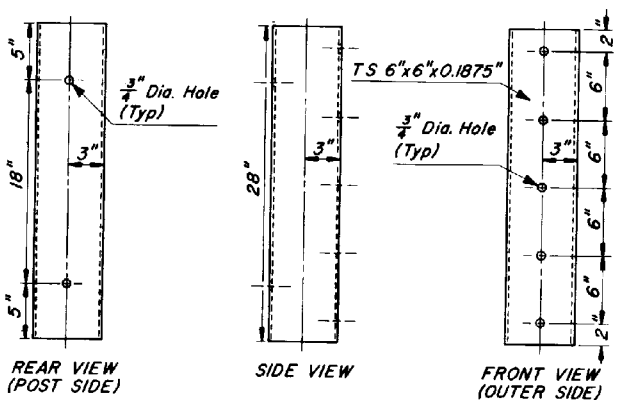

DETAIL K
(SPECIAL STEEL BLOCK)

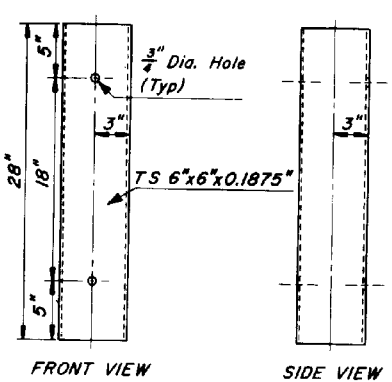

DETAIL L
(STEEL BLOCK)

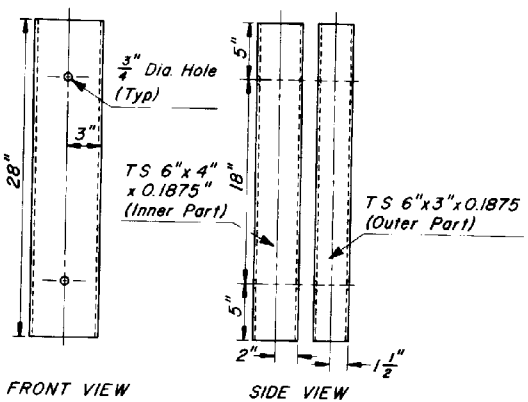

DETAIL N
(DOUBLE STEEL BLOCK)

DESIGN APPROVED	STATE OF ARIZONA DEPARTMENT OF TRANSPORTATION DIVISION OF HIGHWAYS STANDARD DRAWINGS	REV. 7/85
APPROVED FOR DISTRIBUTION	MEDIAN W BEAM BCT ATTENUATOR ASSEMBLY	DRAWING NO. C-10.55 Sheet 3 of 4

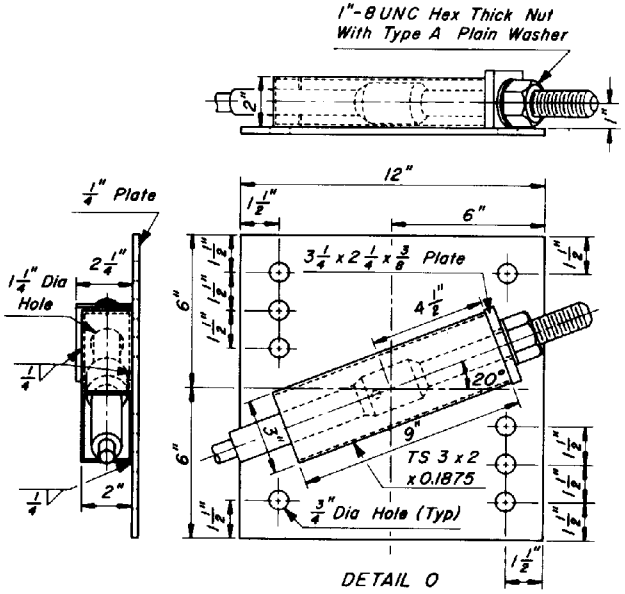

DETAIL O
(BCT PLATE ASSEMBLY)

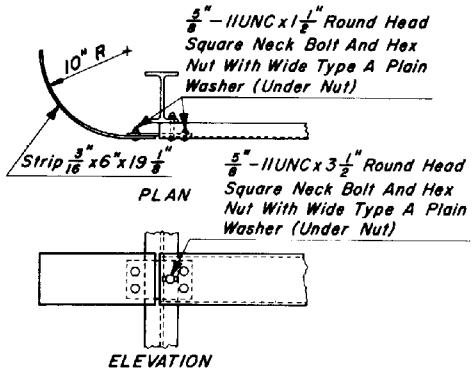

DETAIL Q
(RUB RAIL
TERMINAL ASSEMBLY)

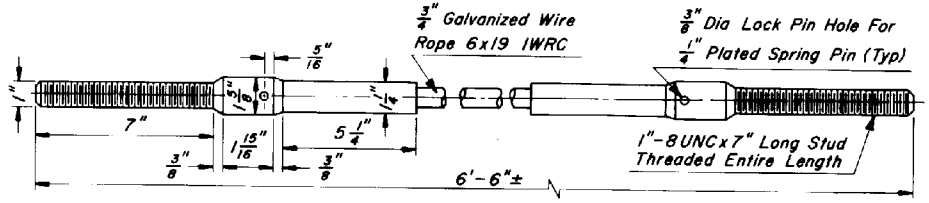

DETAIL P
(BCT CABLE ASSEMBLY)

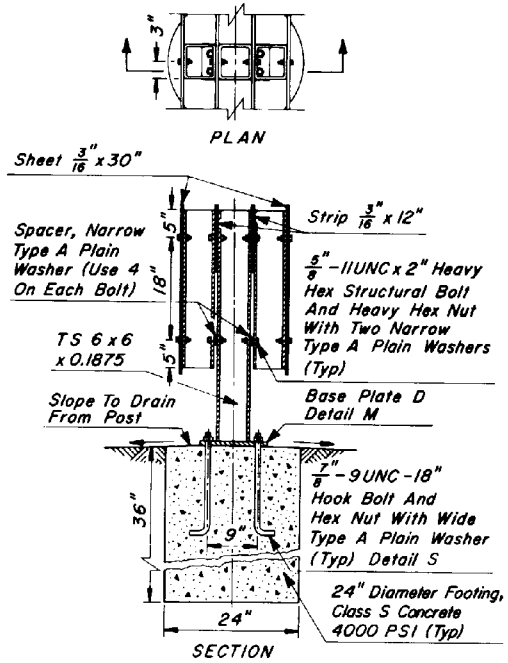

DETAIL R
(POST AND BLOCK ATTACHMENT)

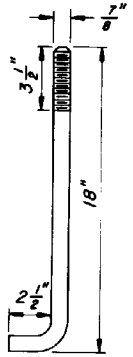

DETAIL S
7/8"-9UNC-18"
HOOK BOLT
(RIGHT ANGLE BENT)

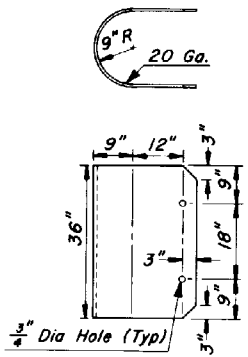

DETAIL T
(NOSE PLATE)

DESIGN APPROVED	STATE OF ARIZONA DEPARTMENT OF TRANSPORTATION DIVISION OF HIGHWAYS STANDARD DRAWINGS	REV. 7/85
APPROVED FOR DISTRIBUTION	MEDIAN W BEAM BCT ATTENUATOR ASSEMBLY	DRAWING NO. C-10.55 Sheet 4 of 4

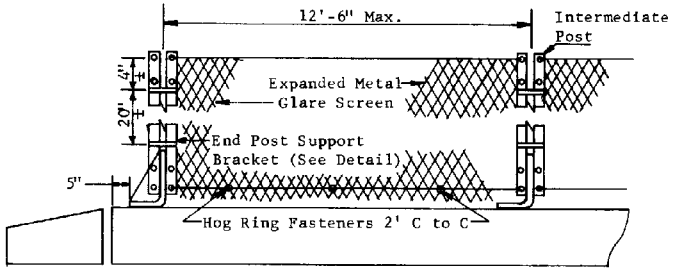

MEDIAN BARRIER GLARE SCREEN

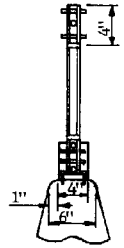

SECTION THRU BARRIER*

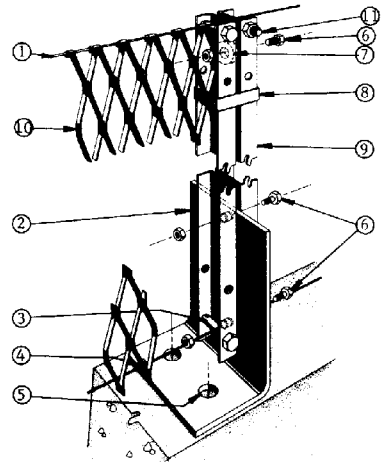

TYPICAL GLARE SCREEN INSTALLATION

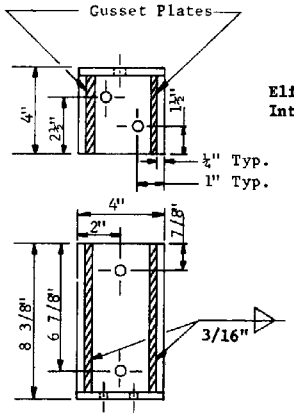

POST SUPPORT BRACKET

Eliminate Gusset Plates on Intermediate Post Support Brackets

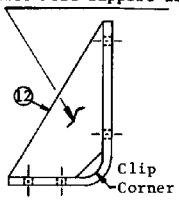

*Note: Contractor may drill holes or cast holes to set anchor bolt required to anchor plate of glare screen post assembly to the median barrier. If cast hole is used, seat bolt in sulfur, epoxy or other material approved by the Engineer.

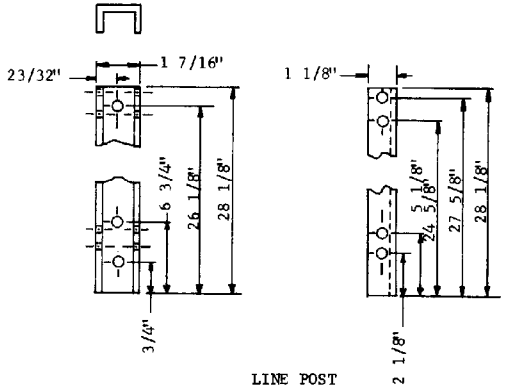

LINE POST

GENERAL NOTES

1. Tension wire: AWG No. 9 (0.148") galv. to conform to ASTM-A-116 Class 2. Wind wire approximately 3 times around ferrule.
2. ½" Support bracket: (0.250") ASTM-A-569, Galv. ASTM-A-123 (after fabrication)
3. Ferrule for tension take-up: ASTM-A-569, 9/16" ID x 1-3/16" long x 0.0747" with 3/16" notch in ends. Galv. ASTM-A-153 Class B-3 (after fabrication)
4. Hog ring: AWG No. 12 (0.105") Galv. ASTM-A-116 Class 2. Fasten glare barrier to bottom tension wire spaced approximately 2' apart.
5. ½" Drilled-in expansion anchors: 5/8" dia. hole-½" hex bolt ASTM-A-307, Glav. ASTM-153 Class C (Phillips Red Head or equal). (See note for alternate).
6. ½" x 1" Hex head bolt with hex nut: ASTM-A-307, Galv. ASTM-A-153 Class C.
7. ¼" x 1" Plate round or square spacer: 9/16" Dia. hole, ASTM-A-36, Galv. ASTM-A-153 Class C.
8. Stainless steel strap & seal shall conform to ASTM-A-176 Type 430. Straps 0.020" x 0.125" (single crimp)
9. Line post: 1-7/16" x 1-1/8" x 0.1196" channel, ASTM-A-569 (2 req'd) Galv. ASTM-A-123 (after fab.)
10. Glare screen: 18 Ga. steel, ASTM-A-526, Galv. ASTM-A-525/G235), expanded to the following dimensions; 1.33" shortway of diamond and 4.0" longway of diamond (C to C of bridges) with a strand width of 0.250" angled at approx. 20° to plane of orig. sheet. Top edge to be shop curled, and crimped on 12" centers. After expansion, galv. steel shall be prepared according to Mil. Spec. TT-C-490 and primed with baked on Zinc Chromate Epoxy min. 0.2 Mil. dry film. Finish coat shall be Polyester Enamel min. 1.0 Mil. by the electrostatic spray method. Color shall be indicated on plans.
11. ½" x 2" Hex head cap screw and hex nut with 3/16" hole drilled through stem ASTM-A-307, Galv. ASTM-A-153, Class C.
12. 0.1793" Gusset ASTM-A-569 Galv. ASTM-A-123.
13. All intermediate post support brackets shall face in same direction. End panel support brackets shall face as shown.

DESIGN APPROVED	STATE OF ARIZONA DEPARTMENT OF TRANSPORTATION DIVISION OF HIGHWAYS STANDARD DRAWINGS	REV. 1/83
APPROVED FOR DISTRIBUTION	GLARE SCREEN, TYPE "P", CONC. MEDIAN BARRIER	DRAWING NO. C-10.96

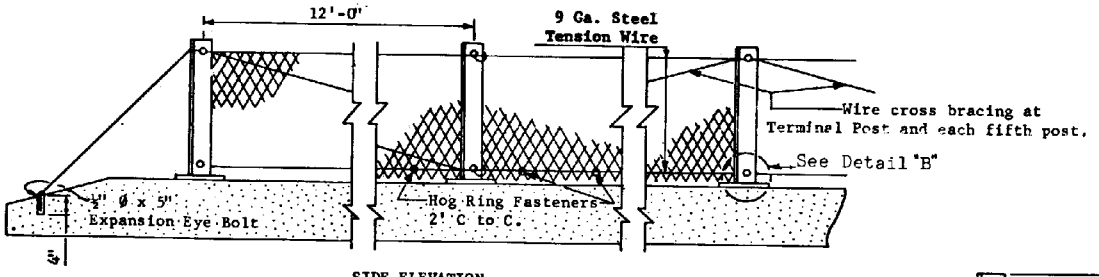

SIDE ELEVATION

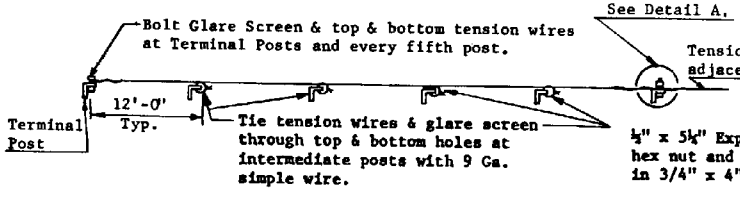

FASTENER LOCATIONS ▲

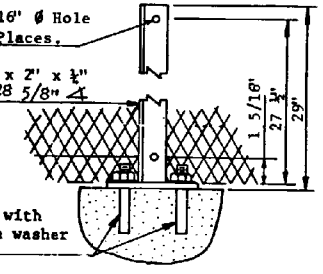

DETAIL "B"
Elevation

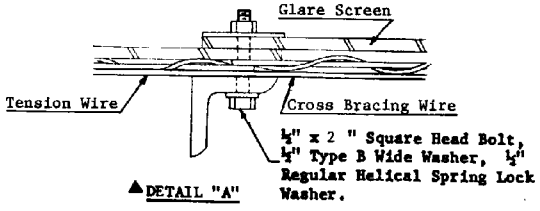

▲DETAIL "A"

Splices allowed in glare screen at posts only, with 1-full diamond overlap.

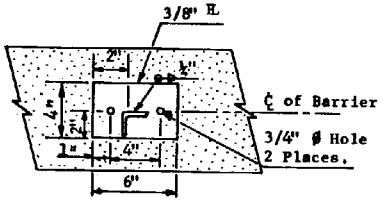

DETAIL "B"
Plan

GENERAL NOTES

Posts shall be 12'-0" C to C. Structural steel shall conform to ASTM-A-36, Galv. ASTM-A-123.

Square head bolt shall conform to ASTM-A-307, Galv. ASTM-A-153 Class C.

Type B washer shall conform to ASTM-F-436, Galv. ASTM-A-153 Class C.

Helical spring lock washer shall conform to ASTM-A-313, Galv. ASTM-A-153 Class C.

For other Glare Screen dimensions and specifications, see Standard C-10.96.

DESIGN APPROVED	STATE OF ARIZONA DEPARTMENT OF TRANSPORTATION DIVISION OF HIGHWAYS STANDARD DRAWINGS	REV. 11/83
APPROVED FOR DISTRIBUTION	GLARE SCREEN, TYPE "O" CONC. MEDIAN BARRIER	DRAWING NO. C-10.97

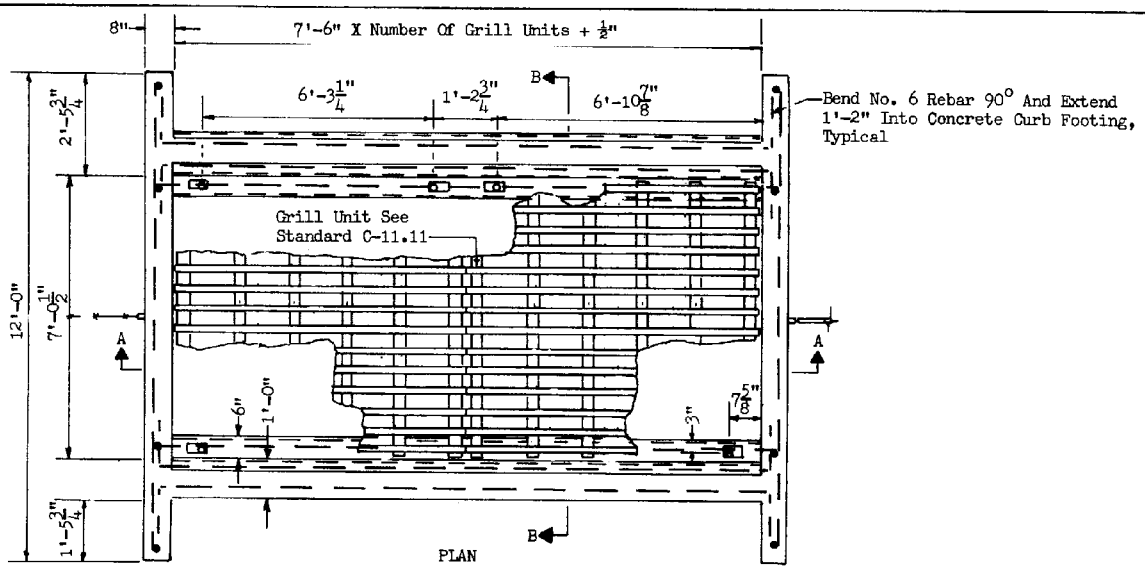

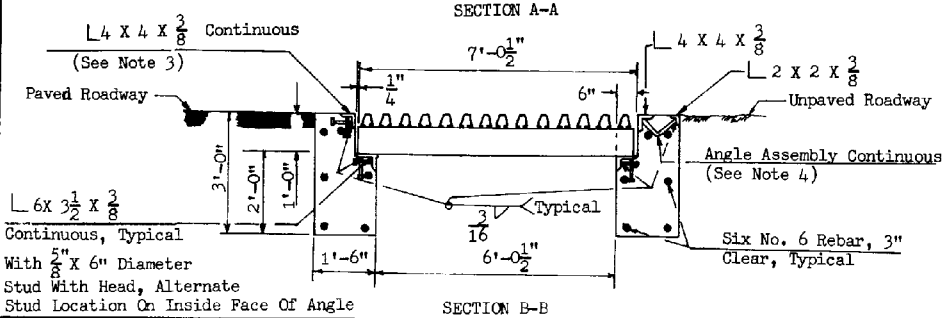

GENERAL NOTES:

1. Standard Plans for Cattle Guard, Footing Type, consists of Standards C-11.10, C-11.11, and C-11.12.
2. Cattle guard shall be sloped to conform to the roadway cross section, except that where an odd number of grill units is specified in a crowned roadway, the center grill unit shall be installed level.
3. Where the adjacent roadway is paved, an angle 4" X 4" X 3/8" with 5/8" diameter stud with head, 1'-0" alternate center to center is required.
4. Where the adjacent roadway is unpaved, an angle assembly is required. An angle asembly consists of one 4" X 4" X 3/8" angle and one 2" X 2" X 3/8" angle connected with 5/8" diameter studs. The studs shall be bent 90° and placed on 1'-0" centers.
5. Each angle and angle assembly shall be fabricated to form a single piece for the full length of the cattle guard.
6. Quantities shown for concrete and reinforcing bars are to be considered approximations for informational purposes only.
7. When guard rail is to be used at the cattle guard, it may be possible to reduce the number of grill units required.

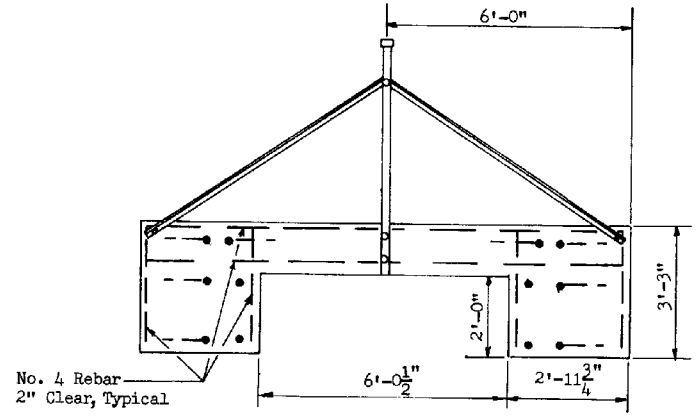

END VIEW

UNIT TABLE

ROADWAY WIDTH (FEET)	GRILL UNITS REQUIRED	CONCRETE CUBIC YARDS	REBAR. LBS.
12	2	5.8	173.3
16	3	8.0	240.9
20	4	10.3	308.5
28	5	12.5	376.1
34	6	14.7	443.7
36	6	14.7	443.7
38	7	16.9	511.2
40	7	16.9	511.2

DESIGN APPROVED

APPROVED FOR DISTRIBUTION

STATE OF ARIZONA
DEPARTMENT OF TRANSPORTATION
DIVISION OF HIGHWAYS
STANDARD DRAWINGS

REV. 1/83

ROADWAY CATTLE GUARD-
FOOTING TYPE

DRAWING NO. C-11.10

GENERAL NOTES:

1. For Cattle Guard details see Std. C-11.10.

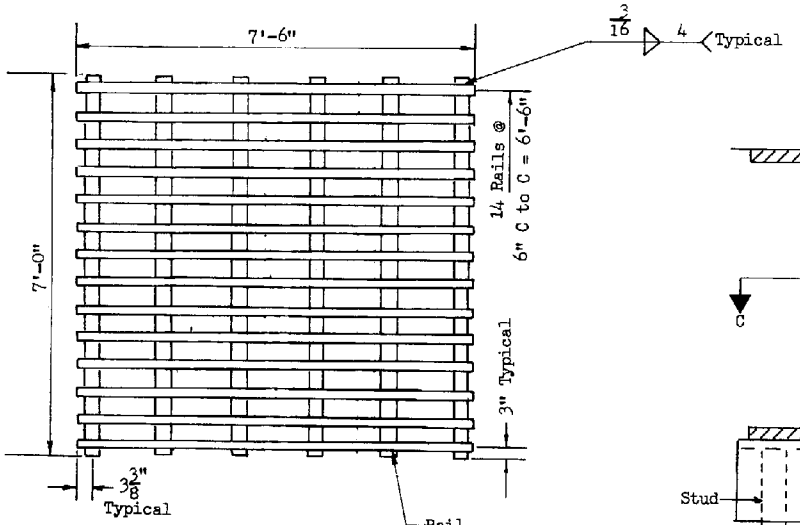

PLAN

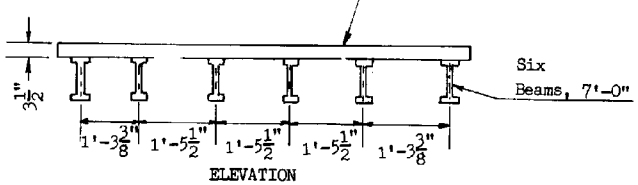

ELEVATION

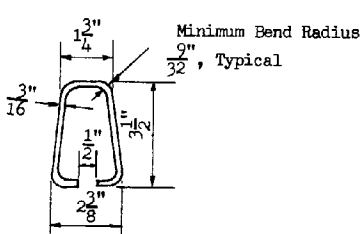

RAIL

GRILL UNIT

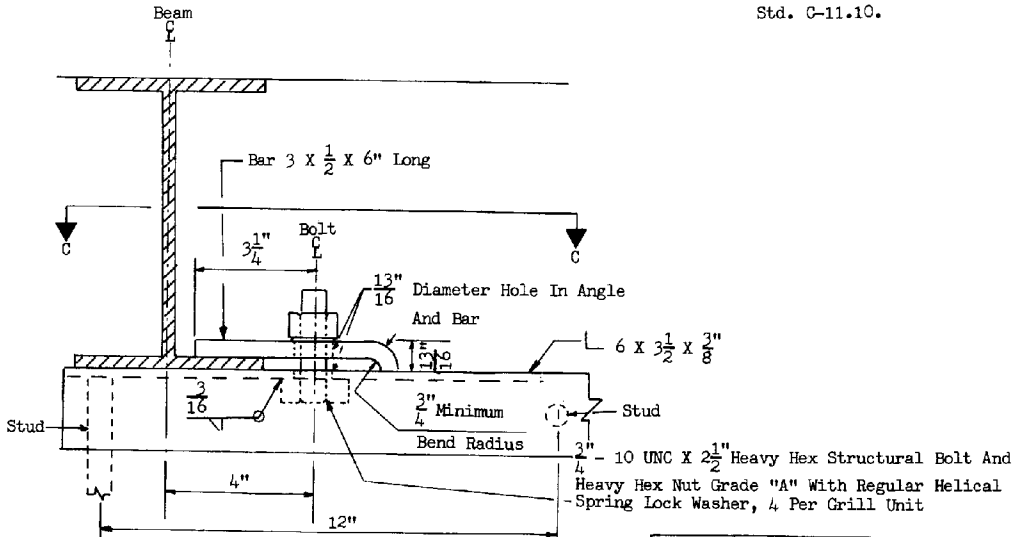

GRILL CLAMP

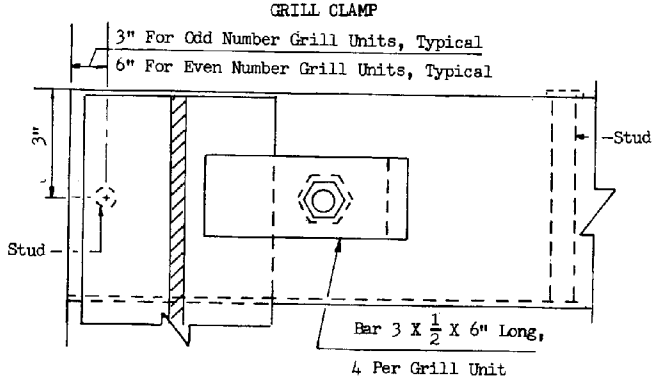

SECTION C-C

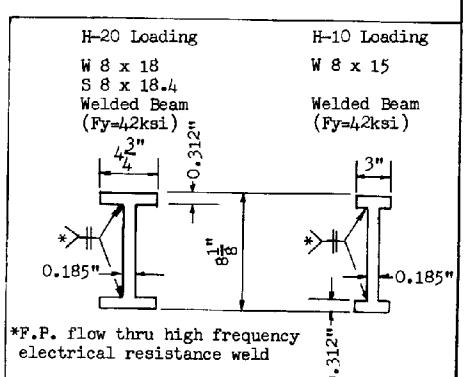

BEAMS

DESIGN APPROVED / APPROVED FOR DISTRIBUTION	STATE OF ARIZONA DEPARTMENT OF TRANSPORTATION DIVISION OF HIGHWAYS STANDARD DRAWINGS	REV. 1/83
	ROADWAY CATTLE GUARD - GRILL & GRILL CLAMP DETAIL	DRAWING NO. C-11.11

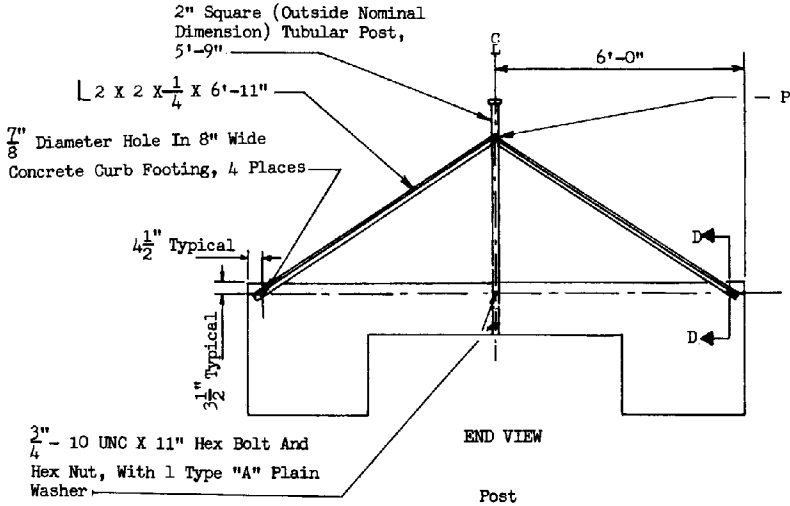

END VIEW

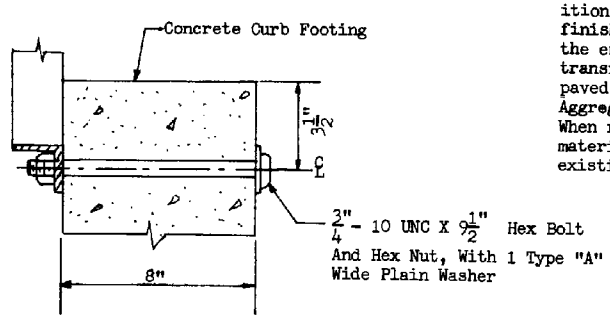

SECTION D-D

GENERAL NOTES:

1. For Cattle Guard details see Std. C-11.10.

2. Material for shoulder transition shall be placed to the finished roadway elevation for the entire length of the transition. When the roadway is paved, Aggregate Subbase or Aggregate Base shall be used. When roadway is unpaved a material equivalent to the existing roadway shall be used.

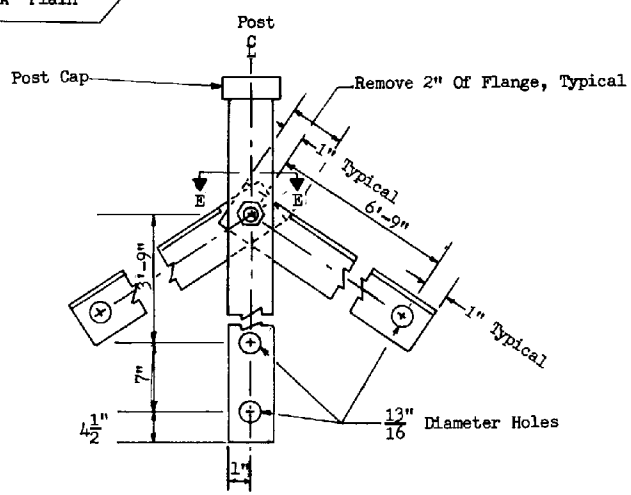

POST AND BRACE ASSEMBLY

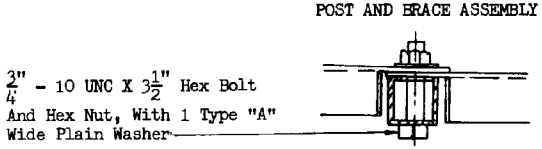

SECTION E-E

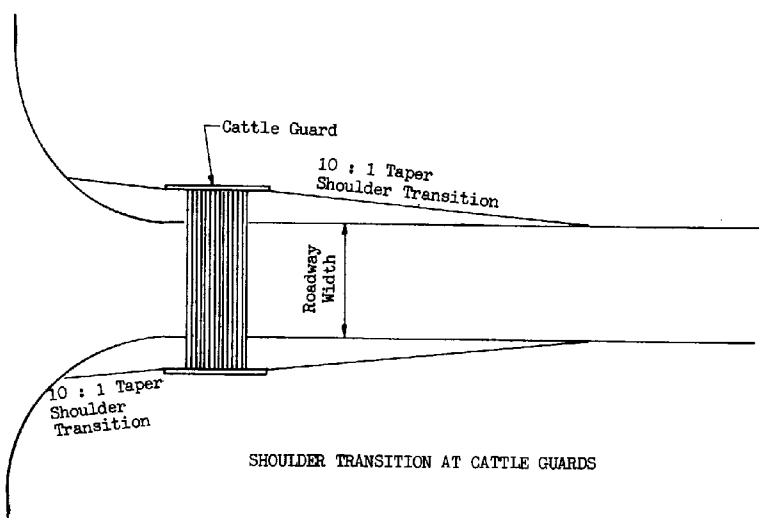

SHOULDER TRANSITION AT CATTLE GUARDS

DESIGN APPROVED	STATE OF ARIZONA DEPARTMENT OF TRANSPORTATION DIVISION OF HIGHWAYS STANDARD DRAWINGS	REV 1/83
APPROVED FOR DISTRIBUTION	ROADWAY CATTLE GUARD - FOOTING TYPE, MISC. DETAILS	DRAWING NO. C-11.12

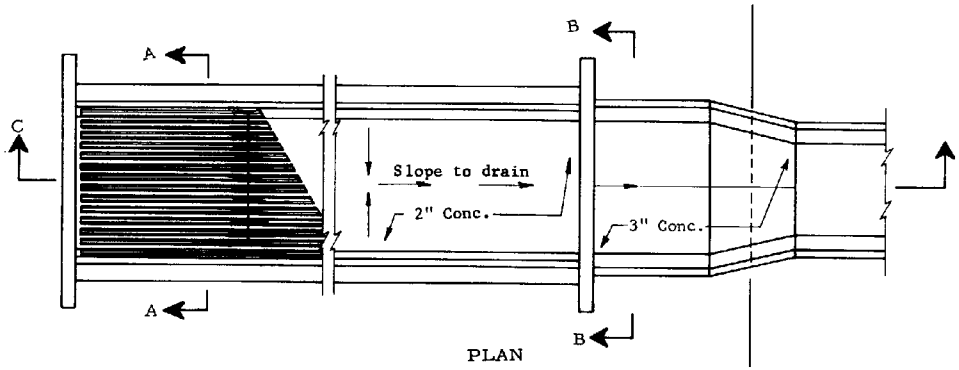

PLAN

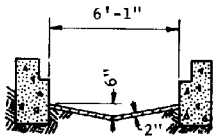

SECTION A-A

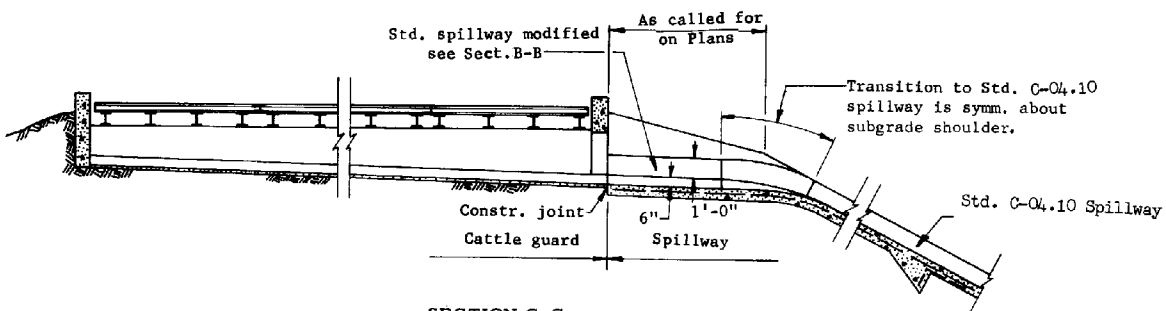

SECTION C-C
IN EMBANKMENT

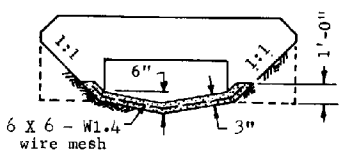

SECTION B-B

GENERAL NOTES

1. For all other cattle guard details, See Stds. C-11.10, 11.11 & 11.12.
2. This standards shall be used in em - bankment or where highly erodable soil is found
3. All concrete shall be Class B.

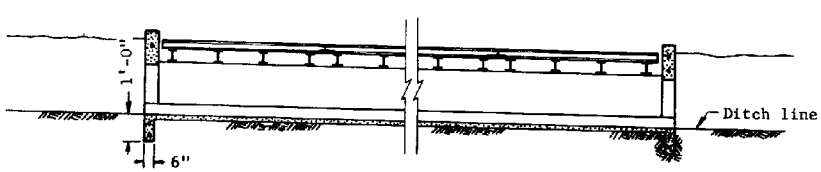

SECTION C-C

WHERE USED FOR THRU DRAINAGE-
CATTLE GUARD OPEN BOTH ENDS

DESIGN APPROVED	STATE OF ARIZONA DEPARTMENT OF TRANSPORTATION DIVISION OF HIGHWAYS STANDARD DRAWINGS	REV. 1/83
APPROVED FOR DISTRIBUTION	CATTLE GUARD, DRAINAGE	DRAWING NO. C-11.20

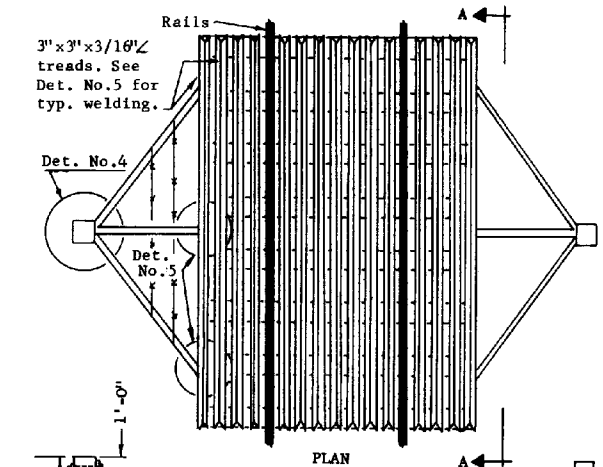

PLAN

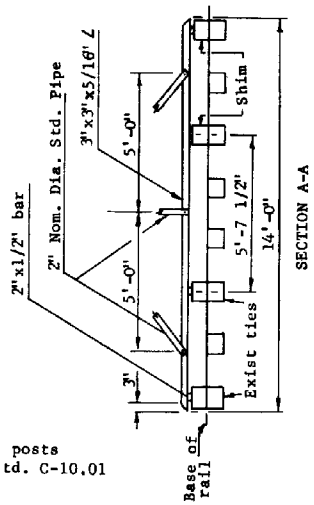

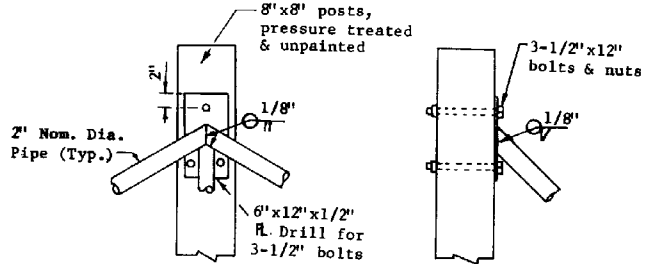

DETAIL NO.4

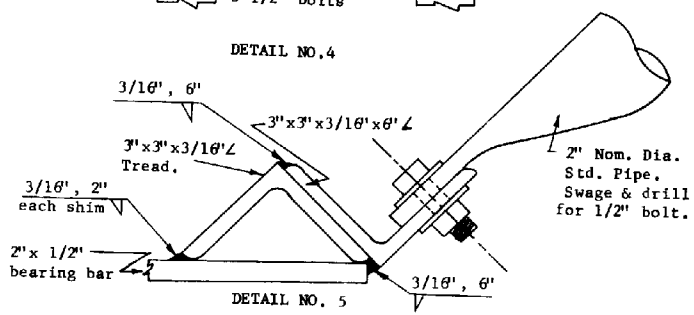

DETAIL NO. 5

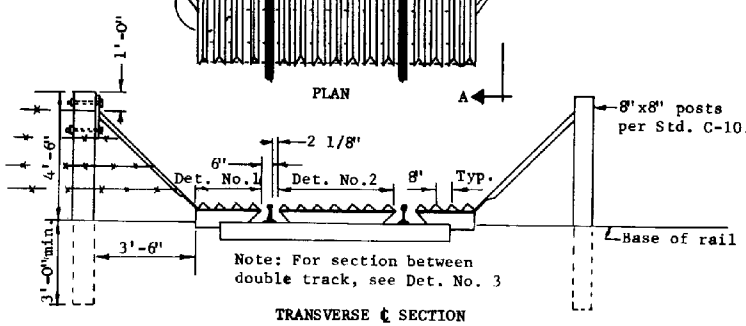

TRANSVERSE ℄ SECTION

*SHIM HEIGHT						
RAIL LBS./YD.						
80	90	110	115	119	131	150
2 1/4"	2 7/8"	3 1/2"	3 7/8"	4 1/16"	4 3/8"	4 9/16"
5/8" DIA. GALV. DOME HEAD SPIKE LENGTH						
11"	11"	11"	11"	13"	13"	13"

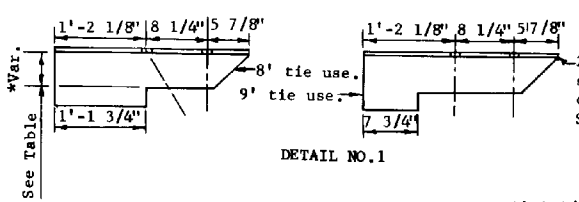

DETAIL NO.1

2"x 1/2" bar. Drill as shown for 5/8" galv. dome head drive spikes. See Table.

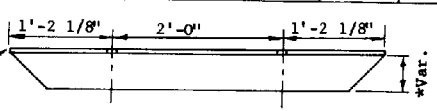

DETAIL NO.2

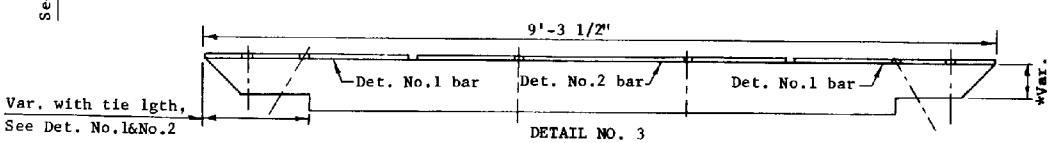

DETAIL NO. 3

CENTER SECTION FOR DOUBLE TRACKS ON 15' CENTERS

GENERAL NOTES

1. This design applicable only to wood tie track construction. Wood shims shall be unpainted and cut from material meeting the specifications of the existing ties.
2. 3"x3"x3/16" treads, 2"x1/2" bearing bars and 2" nom. dia. pipe wing assemblies shall be primed with one coat on No. 1 paint and finished with two coats of yellow enamel paint.

DESIGN APPROVED / APPROVED FOR DISTRIBUTION	STATE OF ARIZONA DEPARTMENT OF TRANSPORTATION DIVISION OF HIGHWAYS STANDARD DRAWINGS	REV. 1/83
	CATTLE GUARD, RAILROAD	DRAWING NO. C-11.30

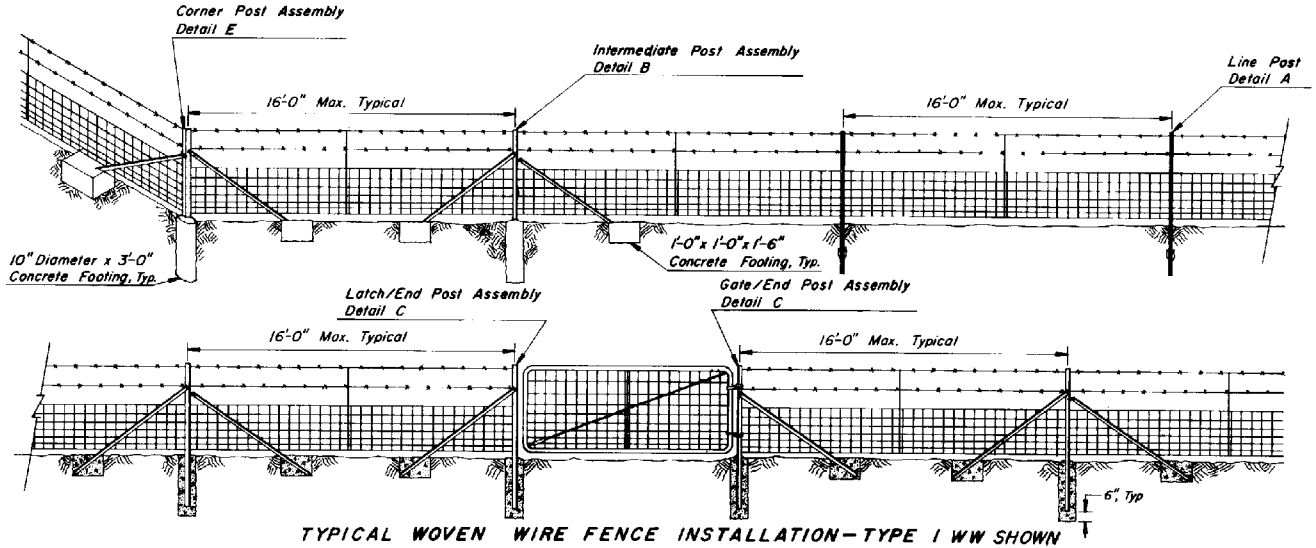

TYPICAL WOVEN WIRE FENCE INSTALLATION—TYPE 1 WW SHOWN

GENERAL NOTES

1. Length of post and braces shall not be less than 7'-0"
2. Woven wire fence fabric shall be attached to the post at the top, bottom, and intermediate wires.
3. Intermediate Post Assemblies shall be located as shown and at intervals to utilize standard rolls to minimize cutting and waste.
4. A twisted wire stay shall be centered between posts.

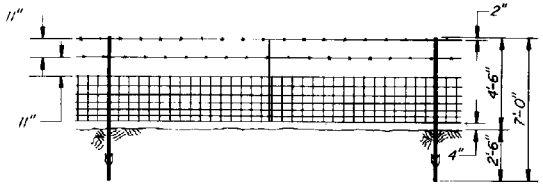

TYPE 1 WOVEN WIRE (WW)

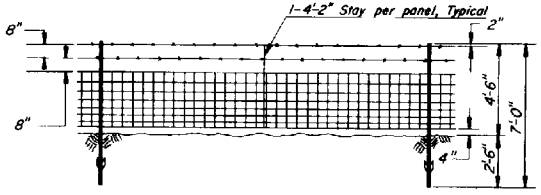

TYPE 2 WOVEN WIRE (WW)

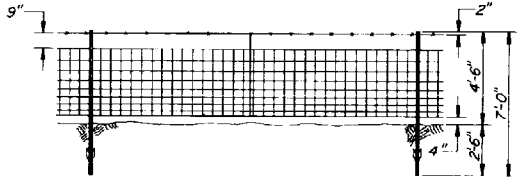

TYPE 3 WOVEN WIRE (WW)

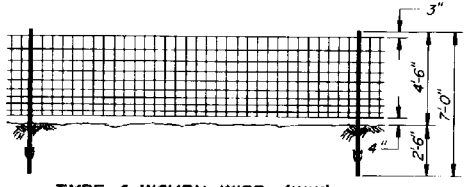

TYPE 4 WOVEN WIRE (WW)

FENCE FABRIC DIMENSIONS AND DESIGN NUMBERS

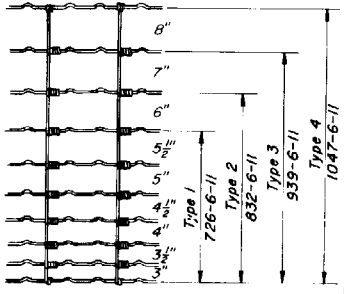

DESIGN APPROVED	STATE OF ARIZONA DEPARTMENT OF TRANSPORTATION DIVISION OF HIGHWAYS STANDARD DRAWINGS	REV. 5/85
APPROVED FOR DISTRIBUTION	Fence, Woven Wire	DRAWING NO. C-12.10 Sheet 1 of 5

SURVEY NOS.	FINISHED PLANS	REVISIONS	LOCATION	DATE

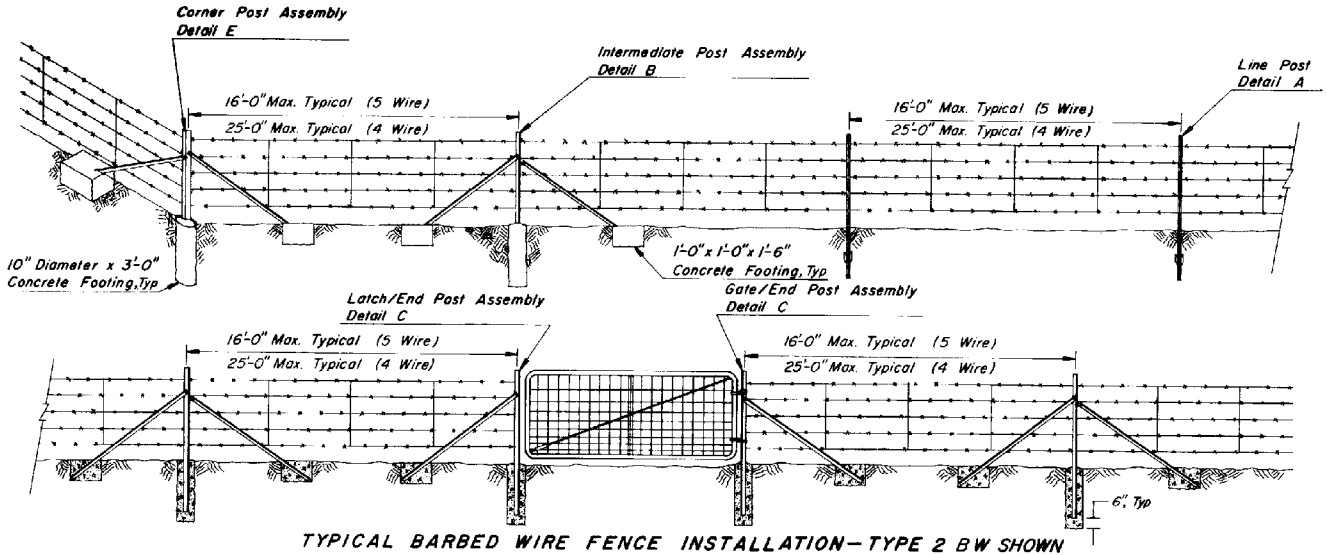

TYPICAL BARBED WIRE FENCE INSTALLATION—TYPE 2 BW SHOWN

GENERAL NOTES

1. Intermediate Post Assemblies shall be located as shown and at intervals not to exceed 650', or midway between all braced posts.
2. For game fence the bottom wire shall be barbless.
3. The stays on game fence shall have their ends turned up, to prevent injuries to game.

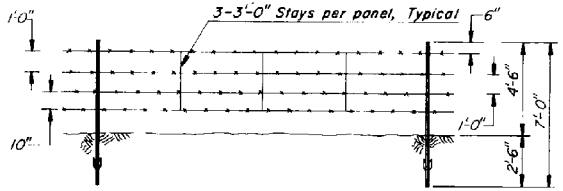

TYPE 1 BARBED WIRE (BW) (4 WIRE)

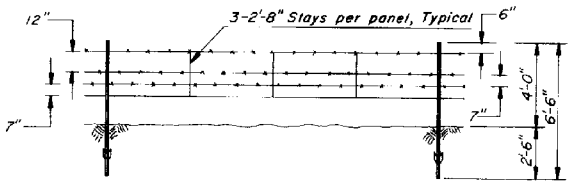

BARBED WIRE GAME FENCE (GF)

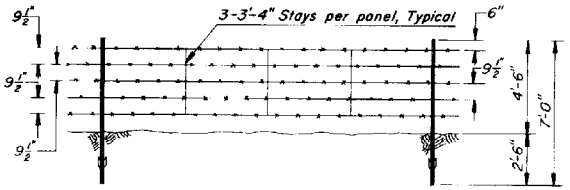

TYPE 2 BARBED WIRE (BW) (5 WIRE)

SURVEY NOS.	FINISHED PLANS	REVISIONS	LOCATION	DATE

DESIGN APPROVED	STATE OF ARIZONA DEPARTMENT OF TRANSPORTATION DIVISION OF HIGHWAYS STANDARD DRAWINGS	REV. 5/85
APPROVED FOR DISTRIBUTION	Fence, Barbed Wire	DRAWING NO. C-12.10 Sheet 2 of 5

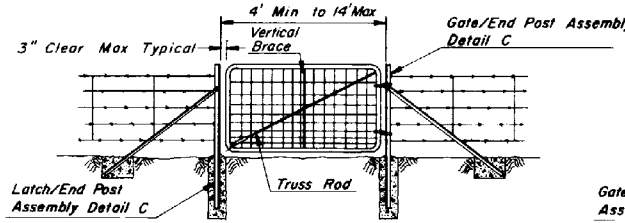

TYPE 1 SINGLE GATE

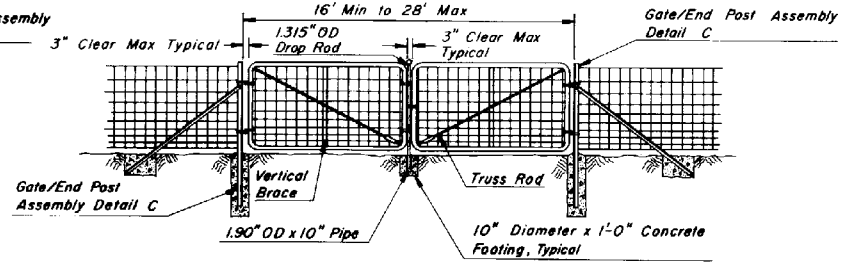

TYPE 1 DOUBLE GATE

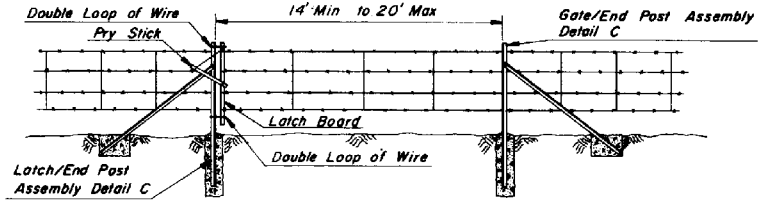

TYPE 2 GATE

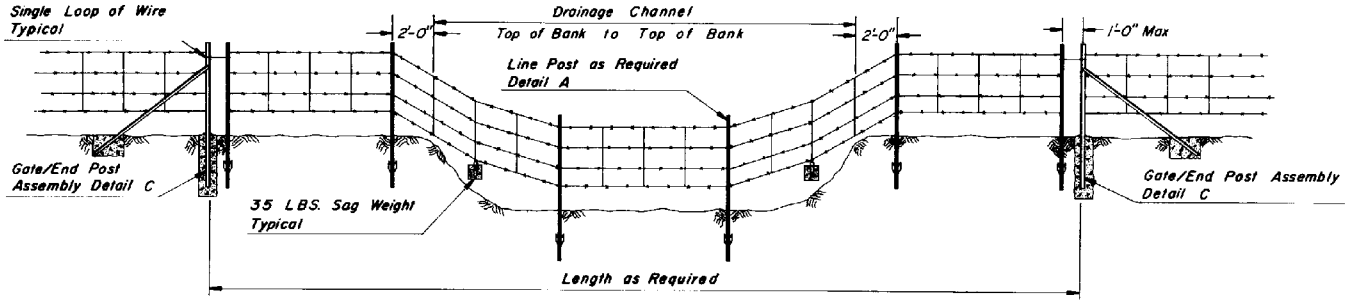

FLOOD GATE

DESIGN APPROVED	STATE OF ARIZONA DEPARTMENT OF TRANSPORTATION DIVISION OF HIGHWAYS STANDARD DRAWINGS	REV. 5/85
APPROVED FOR DISTRIBUTION	Fence, Gate, Type 1 & 2, Flood Gate	DRAWING NO. C-12.10 Sheet 3 of 5

SURVEY NOS.	FINISHED PLANS	REVISIONS	LOCATION	DATE

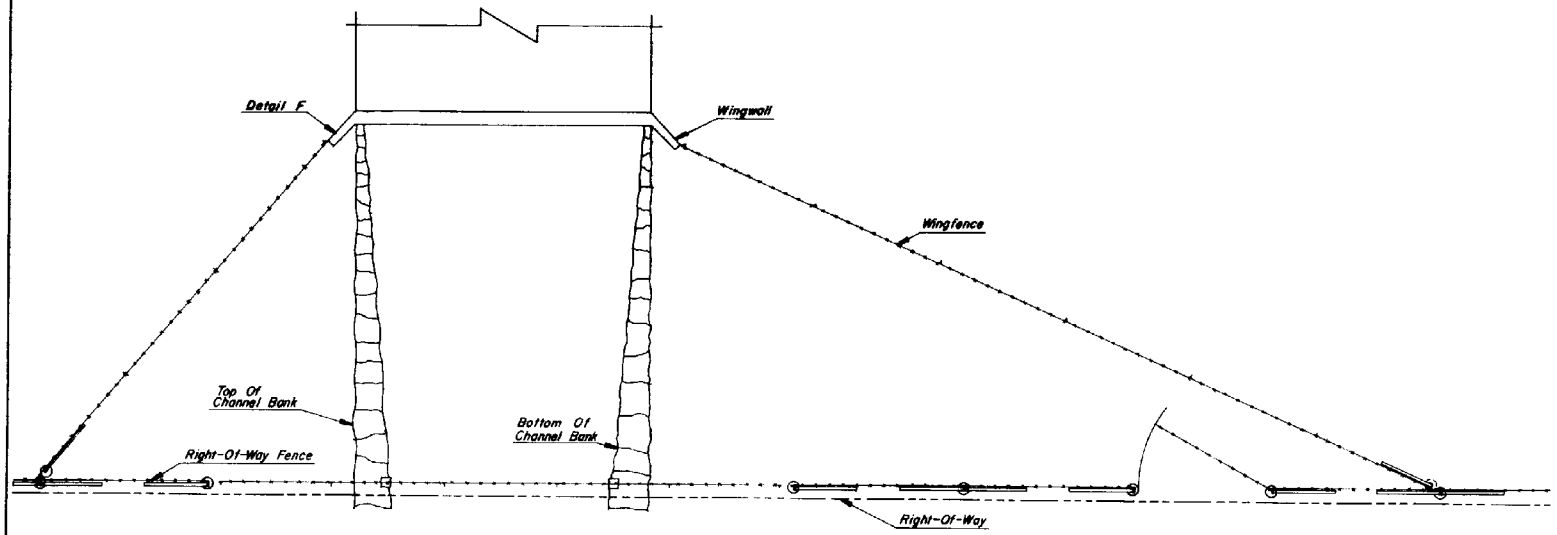

PLAN

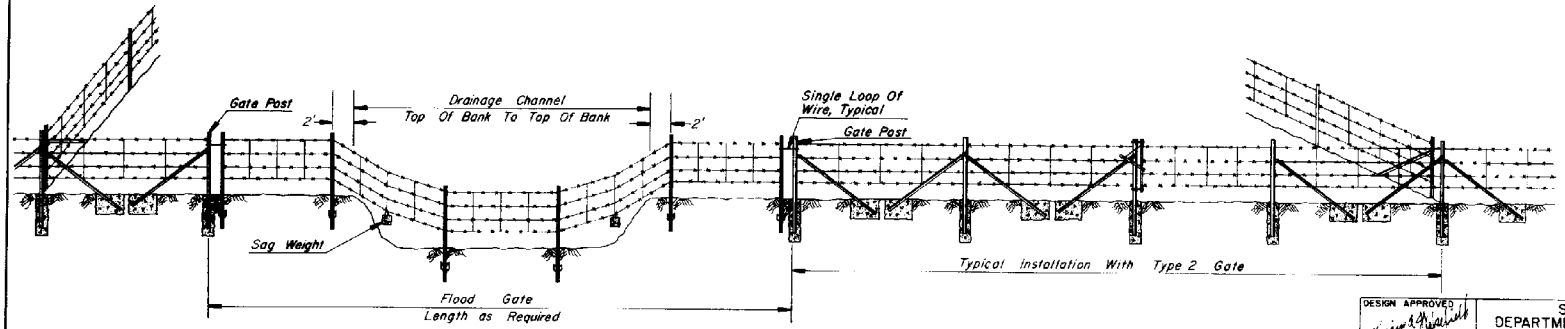

ELEVATION

TYPICAL FLOOD GATE INSTALLATION

SURVEY NOS.	FINISHED PLANS	REVISIONS	LOCATION	DATE

DESIGN APPROVED	STATE OF ARIZONA DEPARTMENT OF TRANSPORTATION DIVISION OF HIGHWAYS STANDARD DRAWINGS	REV. 5/85
APPROVED FOR DISTRIBUTION	Fence, Flood Gate Installation	DRAWING NO. C-12.10 Sheet 4 of 5

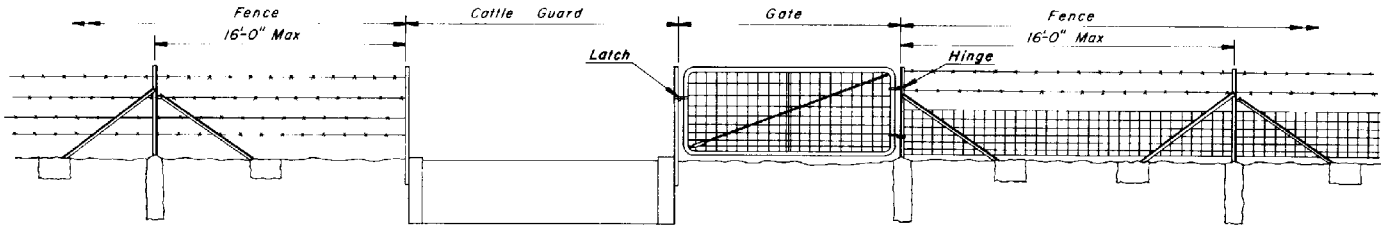

WITHOUT GATE

WITH GATE

TYPICAL FENCE INSTALLATION AT CATTLE GUARD

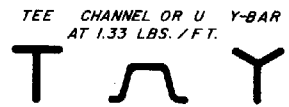

DETAIL A

TYPICAL CROSS SECTIONS OF LINE POST SHAPES

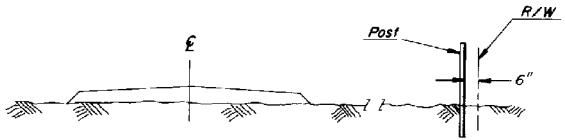

TYPICAL FENCE LOCATION

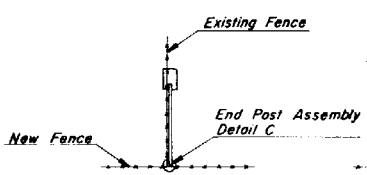

ABUTTING FENCE

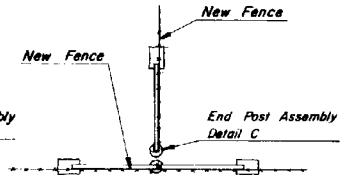

ABUTTING FENCE AT POST

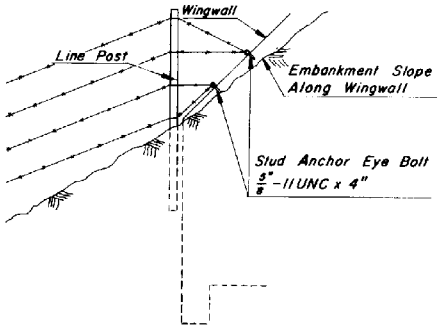

DETAIL F

FENCE CONNECTION TO WINGWALL

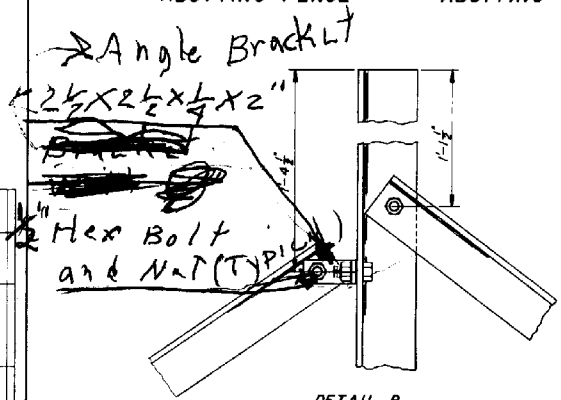

DETAIL B

INTERMEDIATE POST ASSEMBLY

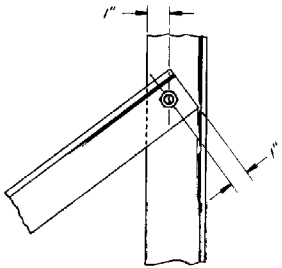

DETAIL C

END POST ASSEMBLY

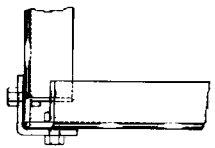

DETAIL E

CORNER POST ASSEMBLY

POST ASSEMBLIES:
UPRIGHT ANGLES 2½x2½x¼ AT 4.10 LBS./FT., BRACE ANGLES 2x2x¼ AT 3.19 LBS./FT.

SURVEY NOS.	FINISHED PLANS	REVISIONS	LOCATION	DATE

DESIGN APPROVED	STATE OF ARIZONA DEPARTMENT OF TRANSPORTATION DIVISION OF HIGHWAYS STANDARD DRAWINGS	REV. 5/85
APPROVED FOR DISTRIBUTION	Fence, Misc. Details	DRAWING NO. C-12.10 Sheet 5 of 5

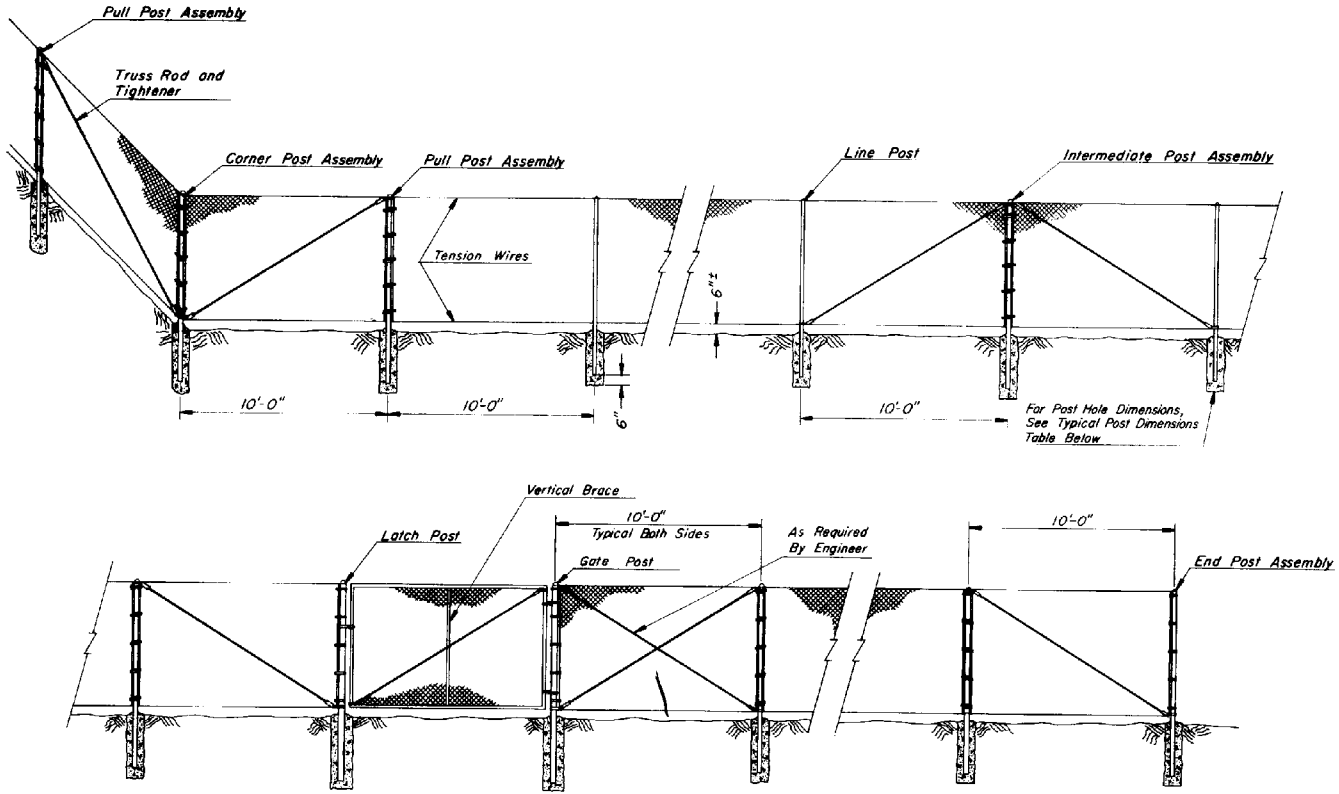

TYPICAL CHAIN LINK FENCE INSTALLATION – TYPE I SHOWN

TYPICAL POST DIMENSIONS

	CORNER, END, INTERMEDIATE, GATE, LATCH AND PULL POSTS					LINE POSTS				
FABRIC HEIGHT	LENGTH	POST HOLE DIA. x DEPTH	ROUND (I.D.)	ROLL FORMED ⌊	ROLL FORMED ⌋	LENGTH	POST HOLE DIA. x DEPTH	ROUND (I.D.)	H-SECTION	ROLL FORMED ⌋
36"	6'-0"	10" x 3'-0"	2.00"	3.50" x 3.50"	2.00" x 1.75"	5'-6"	10" x 2'-6"	1.50"	1.875" x 1.625"	2.00" x 1.75"
48"	7'-0"	10" x 3'-0"	2.00"	3.50" x 3.50"	2.00" x 1.75"	6'-6"	10" x 2'-6"	1.50"	1.875" x 1.625"	2.00" x 1.75"
60"	8'-0"	10" x 3'-0"	2.00"	3.50" x 3.50"	2.00" x 1.75"	7'-6"	10" x 2'-6"	1.50"	1.875" x 1.625"	2.00" x 1.75"
72"	9'-0"	10" x 3'-0"	2.00"	3.50" x 3.50"	2.00" x 1.75"	8'-6"	10" x 2'-6"	1.50"	1.875" x 1.625"	2.00" x 1.75"
OVER 72"	HEIGHT + 3'-0"	12" x 3'-0"	2.50"	3.50" x 3.50"	2.50" x 2.50"	HEIGHT + 2'-6"	12" x 2'-6"	2.00"	2.25" x 2.00"	2.00" x 1.75"

GENERAL NOTES

1. Posts shall be round pipe, H-section or roll-formed and shall conform to the nominal dimensional requirements shown on the plans. In addition the material of which posts are fabricated shall have a nominal thickness, before galvanizing, of not less than 0.111 inch.
2. Chain link fabric shall be either zinc-coated or aluminum-coated steel wire fence fabric. Zinc-coated steel fabric shall conform to the requirements of ASTM A392, Class I coating. Aluminum-coated steel fabric shall conform to the requirements of ASTM A491, with a minimum weight of coating of 0.40 ounce per square foot of wire surface area. Fabric shall be 11 gauge for all fence fabric 60 inches or less in height and shall be 9 gauge for fabrics greater than 60 inches in height.
3. Tension wires shall be 7 gauge (0.177 inch diameter) coil spring steel wire with a minimum tensile strength of 75,000 pounds per square inch, and shall be zinc-coated or aluminum-coated.
4. Truss rods shall be $\frac{3}{8}$ inch diameter adjustable rods. Truss tighteners shall have a strap thickness of not less than $\frac{1}{4}$ inch.
5. Stretcher bars shall be $\frac{3}{16}$ inch by $\frac{3}{4}$ inch steel flat bars. Stretcher bar bands shall be $\frac{1}{8}$ inch by One inch preformed stee bands.
6. Bottom tension wire shall be 5 inches from top of crown on concrete footings.
7. Intermediate post assemblies shall be spaced at 500 foot intervals or midway between pull posts when the distance between such posts is less than 1,000 feet and more than 500 feet.

DESIGN APPROVED	STATE OF ARIZONA DEPARTMENT OF TRANSPORTATION DIVISION OF HIGHWAYS STANDARD DRAWINGS	REV. 5/85
APPROVED FOR DISTRIBUTION	Fence, Chain Link Type I	DRAWING NO. C-12.20 Sheet 1 of 3

SURVEY NOS. | FINISHED PLANS | REVISIONS | LOCATION | DATE

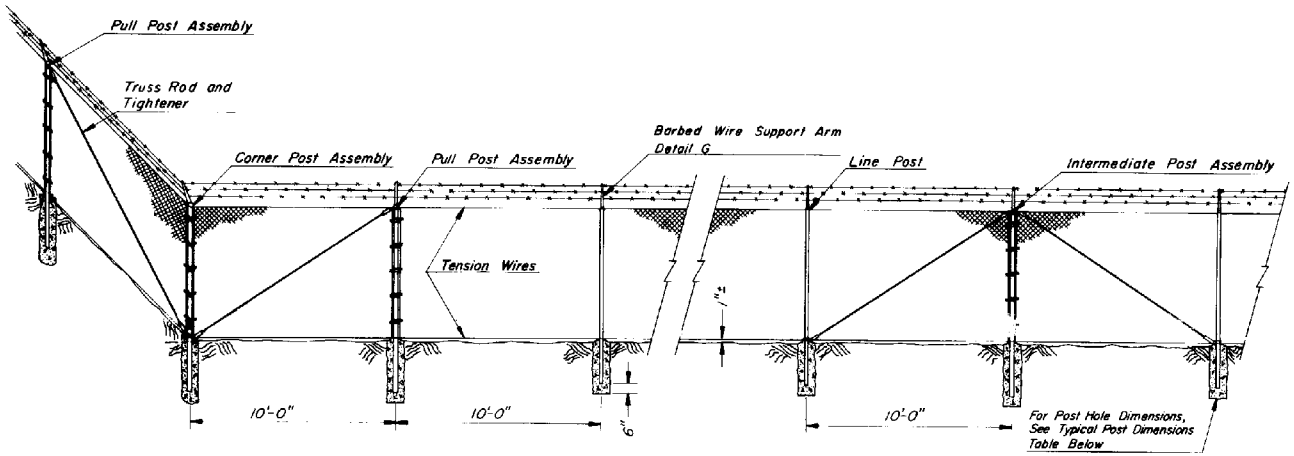

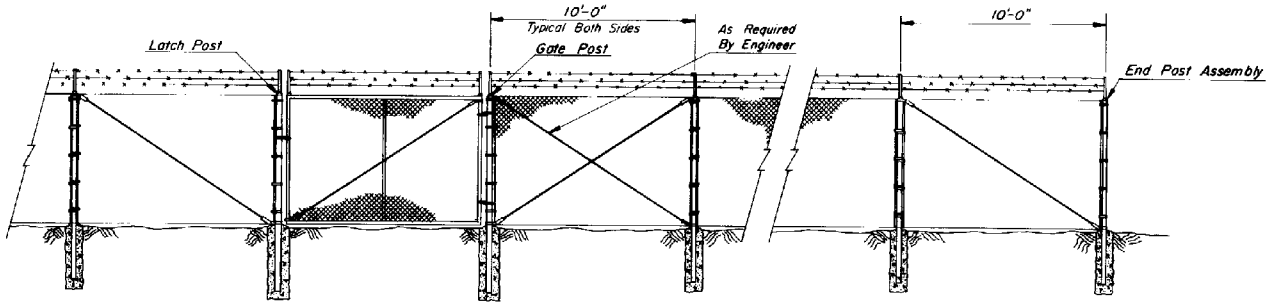

TYPICAL CHAIN LINK FENCE INSTALLATION – TYPE 2 SHOWN

GENERAL NOTES

1. Barbed wire for use with Type 2 chain link fence shall be 12– gauge steel wire with 4 point 14 gauge barbs spaced five inches apart and shall be either zinc-coated or aluminum coated. Zinc-coated steel wire shall conform to the requirements of ASTM A121, Class I coating. Aluminum-coated steel wire shall conform to the requirements of ASTM A585, Type I, Class I coating.
2. Barbed wire support arm shall be of the type shown on the plans, shall be fabricated from commercial quality steel, and shall be zinc-coated in accordance with the requirements of AASHTO M111.
3. Bottom tension wire shall just clear top of crown on concrete footings.
4. For details and notes not shown – see chain link fence – Type I.

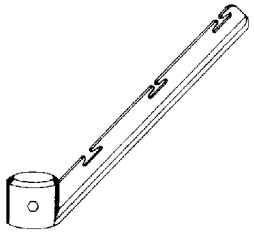

DETAIL G

BARBED WIRE SUPPORT ARM

TYPICAL POST DIMENSIONS										
	CORNER, END, INTERMEDIATE, GATE, LATCH AND PULL POSTS					LINE POSTS				
FABRIC HEIGHT	LENGTH	POST HOLE DIA. x DEPTH	ROUND (I.D.)	ROLL ⊏	FORMED □	LENGTH	POST HOLE DIA. x DEPTH	ROUND (I.D.)	H-SECTION	ROLL FORMED □
72"	9'-0"	10" x 3'-0"	2.00"	3.50" x 3.50"	2.00" x 1.75"	8'-6"	10" x 2'-6"	1.50"	1.875" x 1.625"	2.00" x 1.75"

DESIGN APPROVED [signature]	STATE OF ARIZONA DEPARTMENT OF TRANSPORTATION DIVISION OF HIGHWAYS STANDARD DRAWINGS	REV. 5/85
APPROVED FOR DISTRIBUTION [signature]	Fence, Chain Link Type 2	DRAWING NO. C-12.20 Sheet 2 of 3

SURVEY NOS.	FINISHED PLANS	REVISIONS	LOCATION	DATE

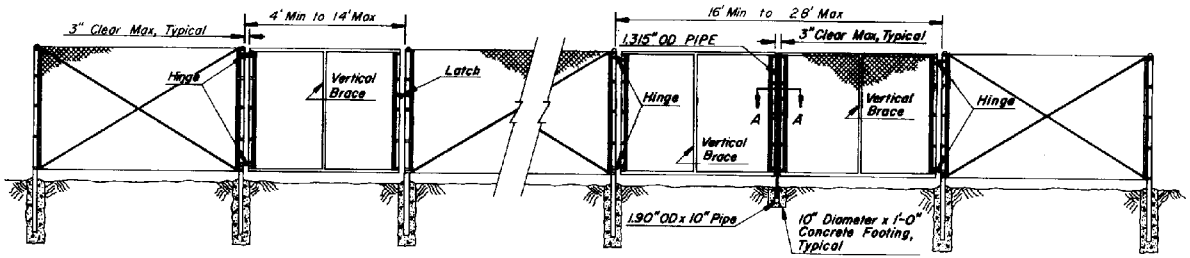

SINGLE GATE

DOUBLE GATE

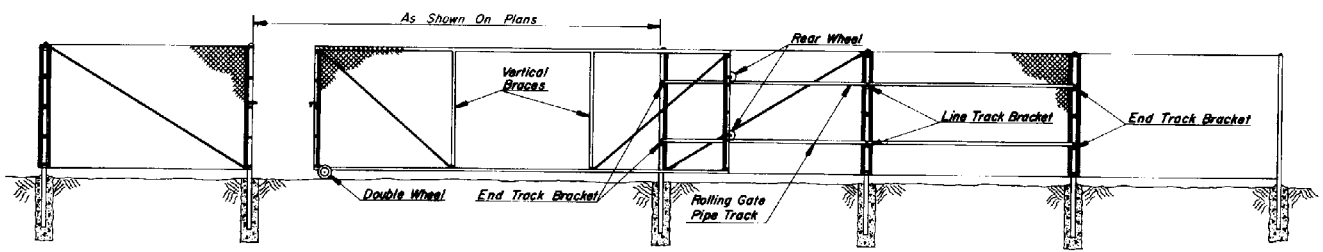

ROLLING GATE

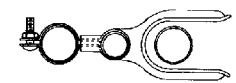

SECTION A-A

DOUBLE GATE LATCH ASSEMBLY

TYPICAL GATE DIMENSIONS

SINGLE AND DOUBLE SWING GATES						ROLLING GATES			
GATE LEAF WIDTH 6'H. OR LESS	VERTICAL BRACES	GATE POST SIZE O.D.	GATE LEAF WIDTH OVER 6'H.	VERTICAL BRACES	GATE POST SIZE O.D.	GATE LEAF WIDTH	NO. OF EQUALLY SPACED VERTICAL BRACES	TENSION RODS PER BRACED PANEL	GATE POST SIZE O.D.
3' to 8'	0	2.8750"	3' to 8'	0	2.8750"	6' to 13'	1	0	2.8750"
8' to 16'	1	4.0000"	8' to 16'	1	4.0000"	13' to 16'	1	1	2.8750"
16' to 18'	2	4.0000"	—	—	—	16' to 21'	2	1	2.8750"
—	—	—	—	—	—	21' to 27'	2	1	2.8750"
—	—	—	—	—	—	28' AND LARGER	3	1	2.8750"

GATES FOR CHAIN LINK FENCE—TYPE 1 SHOWN

(TYPE 2, WITH BARBED WIRE TYPICAL)

SURVEY NOS	FINISHED PLANS	REVISIONS	LOCATION	DATE

DESIGN APPROVED

APPROVED FOR DISTRIBUTION

STATE OF ARIZONA
DEPARTMENT OF TRANSPORTATION
DIVISION OF HIGHWAYS
STANDARD DRAWINGS

REV. 5/85

Fence, Chain Link Gates

DRAWING NO. C-12.20

Sheet 3 of 3

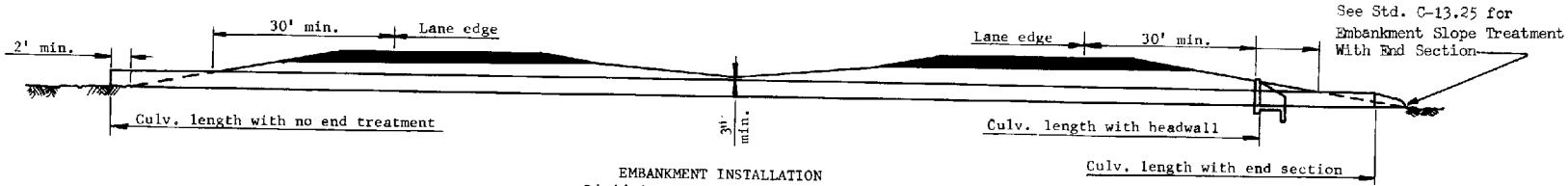

EMBANKMENT INSTALLATION
Divided Hwy. - 2 Way Rdwy. Similar

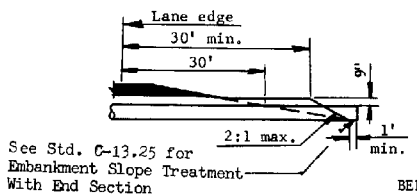

BERM
Not required when pipe projection is protected by guard rail

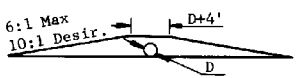

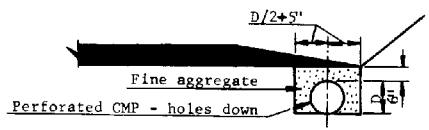

PERFORATED CMP INSTALLATION

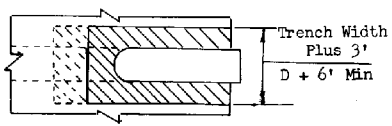

PLAN

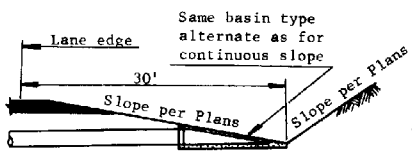

Sag Location

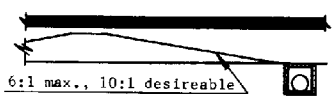

Continuous Slope Location

TRAFFIC - SAFE CUT DITCH INSTALLATION

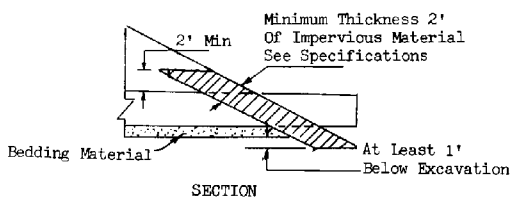

SECTION

PLATING SLOPES AT PIPE LOCATIONS

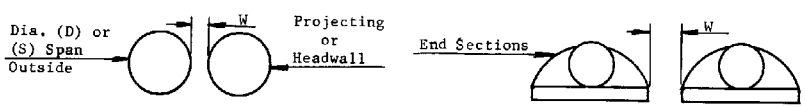

Dia. or Span	W Installation Type		
	Projecting	Headwall	End Sections
Less than 30"	12"	12"	12"
30" - 66"	(D or S)/2	(D or S)/2	12"
72" & Over	36"	36"	12"

MINIMUM SPACING FOR MULTIPLE INSTALLATIONS

GENERAL NOTES

1. Any required inlet and/or outlet protection shall be as called for on plans.
2. See also: C-14.00 and remaining C-13.00 series standards.
3. W Dimension applies to trench condition also.

DESIGN APPROVED	STATE OF ARIZONA DEPARTMENT OF TRANSPORTATION DIVISION OF HIGHWAYS STANDARD DRAWINGS	REV 11/83
APPROVED FOR DISTRIBUTION	PIPE CULVERT INSTALLATION	DRAWING NO. C-13.10

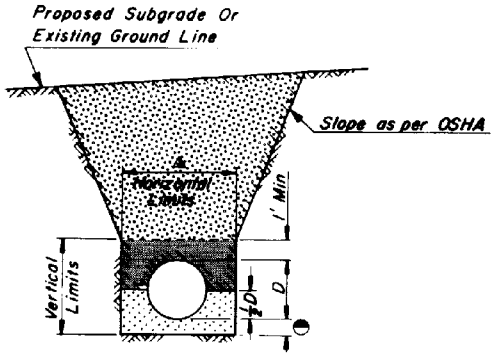

TRENCH CONDITION

IN NATURAL GROUND OR IN EMBANKMENT
WITHOUT BRACING

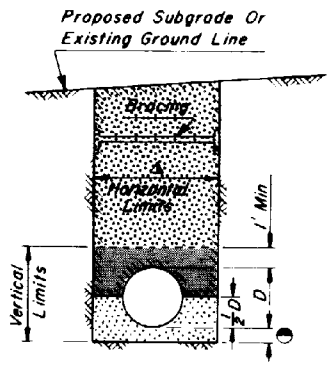

TRENCH CONDITION

IN NATURAL GROUND OR IN EMBANKMENT
WITH BRACING SHOWN

GENERAL NOTES

1. Pipes shall be installed either in a trench condition or in a non-trench condition in natural ground or in an embankment.

2. In a trench condition, the vertical and horizontal limits shall be maintained, if horizontal limits are exceeded or the vertical limits are not maintained, a non-trench condition exists.

3. Bracing and sloping shall conform to OSHA requirements.

4. Pipe backfill may be bedding material.

D – Outside diameter of full circle pipe or outside dimension (span or rise) of arch, arch pipe, elliptical pipe.

T – Minimum wall thickness for NRCIPCP, as per project plans.

▲ – D+2 feet maximum for diameters up to 4 feet and D+3 feet maximum for diameters 4 feet and over.

◓ – 6 inches except when on unyielding or unstable material, then as per the standard specifications.

-NON-TRENCH CONDITION

-TRENCH CONDITION

-BEDDING

-PIPE BACKFILL

-TRENCH BACKFILL

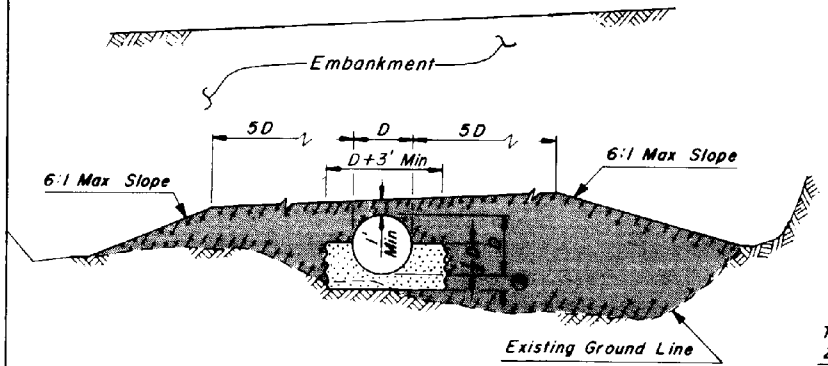

NON-TRENCH CONDITION

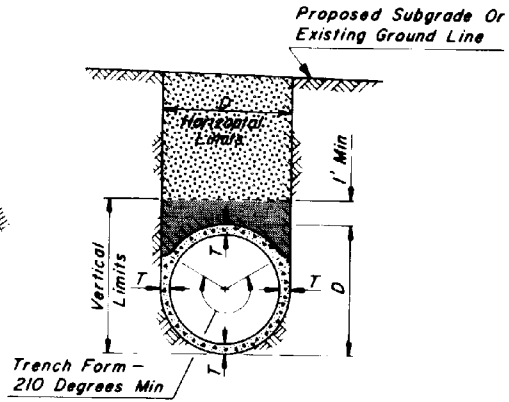

TRENCH CONDITION

NRCIPCP IN NATURAL GROUND
OR IN EMBANKMENT

DESIGN APPROVED	STATE OF ARIZONA DEPARTMENT OF TRANSPORTATION DIVISION OF HIGHWAYS STANDARD DRAWINGS	REV 5/85
APPROVED FOR DISTRIBUTION	TYPICAL PIPE INSTALLATION	DRAWING NO C-13.15

PIPE DIA.	APPROX. WEIGHT	DIMENSIONS - INCHES T	A	B	C	E	F	APPROX. SLOPE
24	1520#	3	9½	43½	30	73½	48	3
27	1930#	3¼	10½	49½	24	73½	54	3
30	2190#	3½	12	54	19¾	73¾	60	3
36	4100#	4	15	63	34¾	97¾	72	3
42	5380#	4½	21	63	35	98	78	3
48	6550#	5	24	72	26	98	84	3
54	8240#	5½	27	65	33¼	98¼	90	2½

GENERAL NOTES

Design of end section shall conform to standards for reinforced concrete pipe.

End section joint conformation shall match the pipe joints.

Embankment slope shall be warped to match slope of end section.

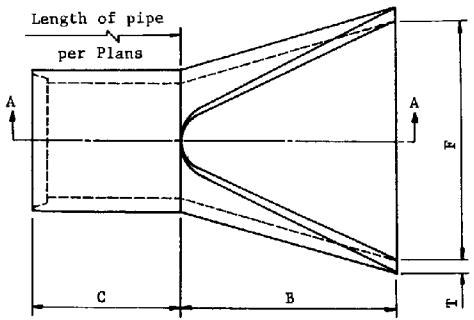

PLAN

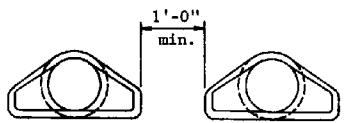

SPACING FOR MULTIPLE INSTALLATION

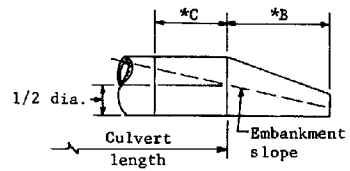

Right Angle Culvert

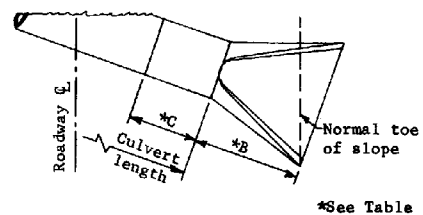

*See Table

Skewed Culvert

CULVERT LENGTH AS SHOWN ON PLANS

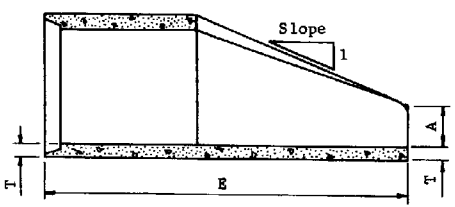

SECTION A-A

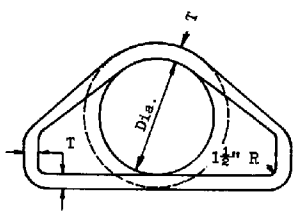

FRONT ELEVATION

DESIGN APPROVED	STATE OF ARIZONA DEPARTMENT OF TRANSPORTATION DIVISION OF HIGHWAYS STANDARD DRAWINGS	REV. 1/83
APPROVED FOR DISTRIBUTION	PIPE, REINFORCED CONCRETE END SECTION	DRAWING NO. C-13.20

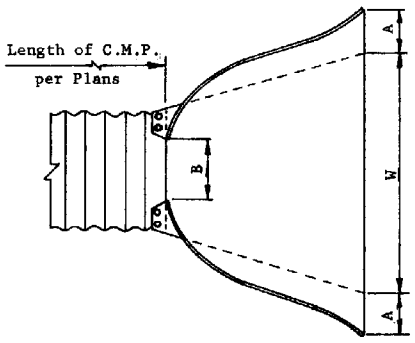

PIPE DIA.	GA.	DIMENSIONS - INCHES A ±1	B Max.	H ±1	L ±1½	W ±2	APPROX. SLOPE	CONNECTION TYPE
18"	16	8	10	6	31	36	2 1/2	1,2,3,4,5
24"	16	10	13	6	41	48	2 1/2	1,2,3,4,5
30"	14	12	16	8	51	60	2 1/2	1,2,4,5
36"	14	14	19	9	60	72	2 1/2	1,2,4,5
42"	12	16	22	11	69	84	2 1/2	1
48"	12	18	27	12	78	90	2 1/4	1
54"	12	18	30	12	84	102	2	1
60"	12,10	18	33	12	87	114	1 3/4	1
66"	12,10	18	36	12	87	120	1 1/2	1
72"	12,10	18	39	12	87	126	1 1/3	1
78"	12,10	18	42	12	87	132	1 1/4	1
84"	12,10	18	45	12	87	138	1 1/6	1

PIPE ARCH SPAN	RISE	GA.	DIMENSIONS - INCHES A ±1	B Max.	H ±1	L ±1½	W ±2	APPROX. SLOPE	CONNECTION TYPE
29"	18"	16	9	14	6	32	48	2 1/2	1,2,3,4,5
36"	22"	14	10	16	6	39	60	2 1/2	1,2,4,5
43"	27"	14	12	18	8	46	75	2 1/2	1,2,4,5
50"	31"	12	13	21	9	53	85	2 1/2	1
58"	36"	12	18	26	12	63	90	2 1/2	1
65"	40"	12	18	30	12	70	102	2 1/2	1
72"	44"	12	18	33	12	77	114	2 1/4	1

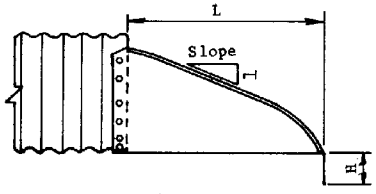

END SECTION DIMENSIONS
Riveted or Bolted Connections

TYPE 1

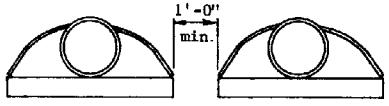

MULTIPLE INSTALLATION SPACING

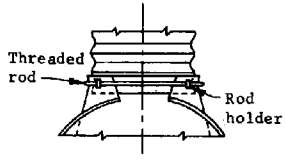

TYPE 2

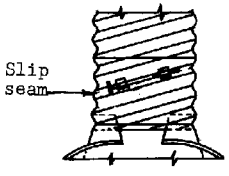

TYPE 5

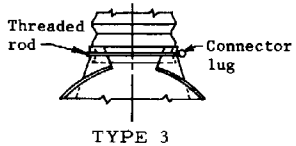

TYPE 3

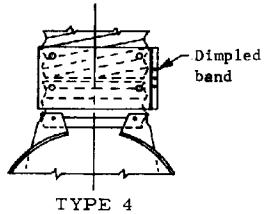

TYPE 4

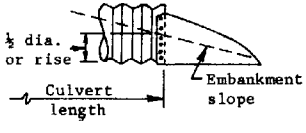

Right Angle Culvert

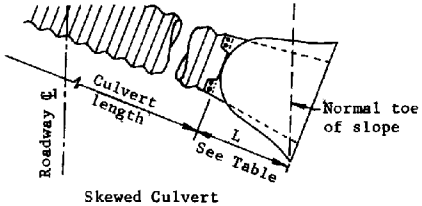

Skewed Culvert

CULVERT LENGTH AS SHOWN ON PLANS

GENERAL NOTES

The end section may be jointed to the pipe or connector section by bolts, rivets, dimpled bands, slip-seam bands or threaded rod type fasteners. For allowable connector types, see table.

The type 1 connector (far left) is by means of bolts or rivets. Maximum circumferential fastener spacing shall be 12" and with a minimum of 8 fasteners per joint. The Type 1 joint may be used with either annular or helical corrugations.

Type 2 and 3 connectors shall be used only with annular pipe or helical pipe with a requisite number of annular corrugations.

Type 4 and 5 connectors shall be used only with helical pipe.

All steel end section components shall be galvanized.

Toe of embankment shall be warped to match toe of skewed end sections.

A berm shall be added to abnormal projections per Std. C-13.10

The foregoing applies to all cross section configurations.

DESIGN APPROVED	STATE OF ARIZONA DEPARTMENT OF TRANSPORTATION DIVISION OF HIGHWAYS STANDARD DRAWINGS	REV. 1/83
APPROVED FOR DISTRIBUTION	PIPE, CORRUGATED METAL, END SECTION	DRAWING NO. C-13.25

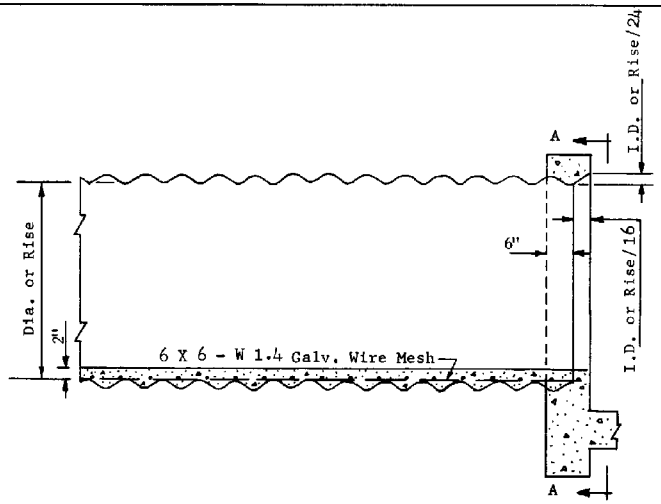

HEADWALL INSTALLATION

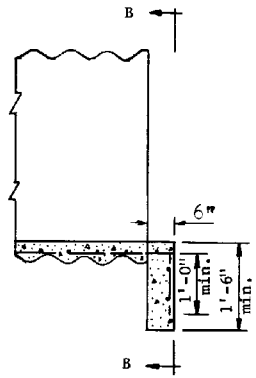

PROJECTING INSTALLATION

GENERAL NOTES

For lateral dimension of invert paving, use 72° control for CMP and span for CMPA.

Paving shall be scored longitudinally at 1'-6" min. lateral intervals.

Use bevel on inlet headwall only.

Wire mesh shall be fastened or welded to corrugation crests at intervals and in a manner approved by the Engineer. Laps shall be 6" min.

Paving shall not be placed until backfilling is completed.

Concrete shall be Class "B".

See Std. C-14.20 for headwall and bevel dimensions not shown.

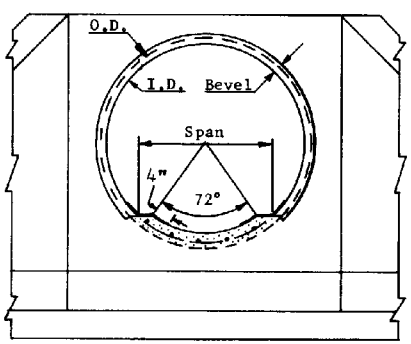

Elevation A-A

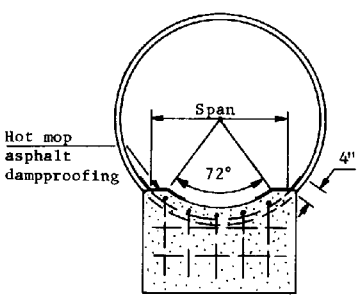

Elevation B-B

DESIGN APPROVED	STATE OF ARIZONA DEPARTMENT OF TRANSPORTATION DIVISION OF HIGHWAYS STANDARD DRAWINGS	REV. 1/83
APPROVED FOR DISTRIBUTION	PIPE & PIPE ARCH, CORRUGATED METAL CONCRETE INVERT PAVING	DRAWING NO. C-13.30

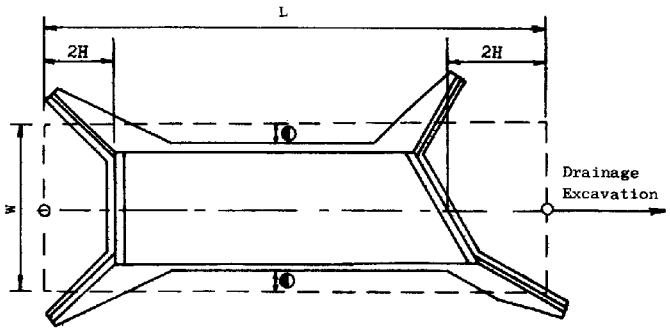

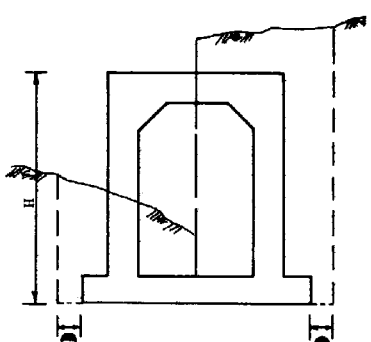

Concrete Box Culvert

GENERAL NOTES

1. Payment limits shown include structural excavation for headwalls, cutoff walls, wingwalls, end sections, etc.
2. W = Width
   L = Length
   H = Height of barrel or headwall w/o cutoff wall
3. ● 6" max in rock & trench.
   1'-6" max all others

DESIGN APPROVED	STATE OF ARIZONA DEPARTMENT OF TRANSPORTATION DIVISION OF HIGHWAYS STANDARD DRAWINGS	REV 1/83
APPROVED FOR DISTRIBUTION	STRUCTURAL EXCAVATION PAYMENT LIMITS	DRAWING NO. C-13.35

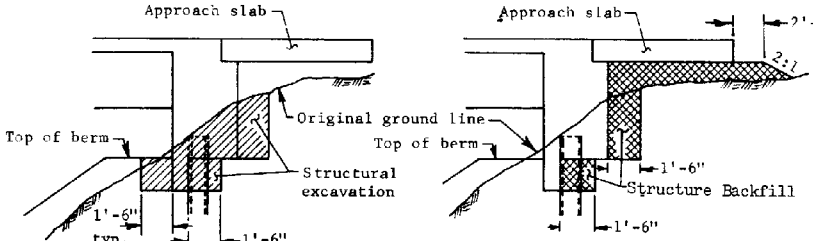

GROUND LINE ABOVE BERM

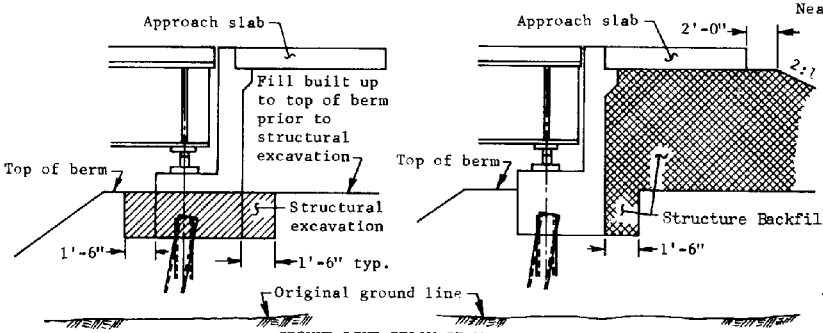

GROUND LINE BELOW BERM

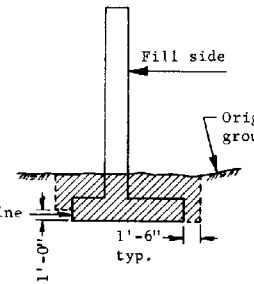

STRUCTURAL EXCAVATION
(Typical)

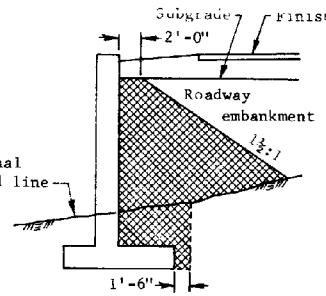

STRUCTURE BACKFILL ▲
(Roadway)

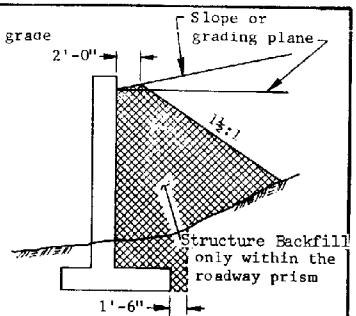

STRUCTURE BACKFILL ▲
(Wingwalls etc.)

RETAINING WALLS

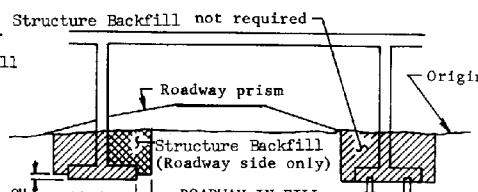

NOTE: Structure Backfill is required for piers only when the pier falls within the roadway prism.

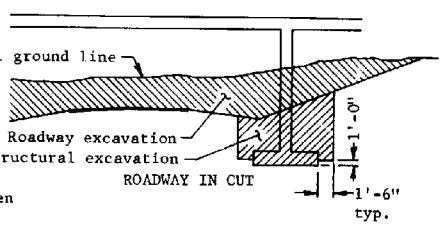

LONGITUDINAL SECTIONS THRU BRIDGE

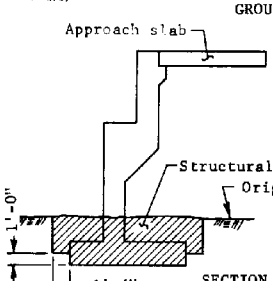

SECTION THRU WALL TYPE ABUTMENT

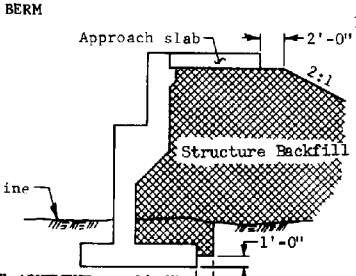

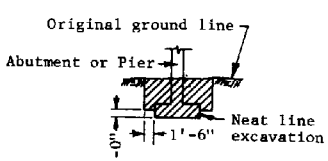

SECTION THRU TYPICAL
SPREAD FOOTING

NOTE: For any footing on piles do not use Neat Line Excavation.

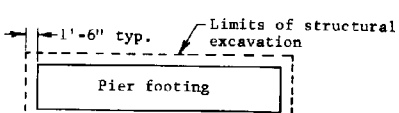

PIER FOOTING PLAN
(Showing Limits of Structural Excavation)

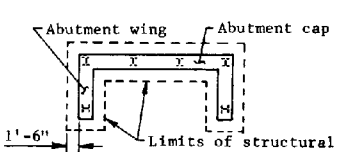

TYPICAL ABUTMENT FOOTING PLAN
(Showing Limits of Structural Excavation)

STRUCTURAL EXCAVATION
FOR ABUTMENTS

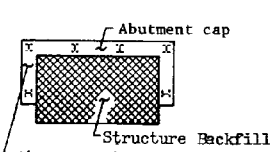

ABUTMENT PLAN
(Showing Limits of Structure Backfill)

STRUCTURE BACKFILL FOR ABUTMENTS ▲

DESIGN APPROVED	STATE OF ARIZONA DEPARTMENT OF TRANSPORTATION DIVISION OF HIGHWAYS STANDARD DRAWINGS	REV. 11/83
APPROVED FOR DISTRIBUTION	STRUC. EXC. PAYMENT LIMITS STR. BACKFILL PLACEMENT ▲	DRAWING NO. C-13.40

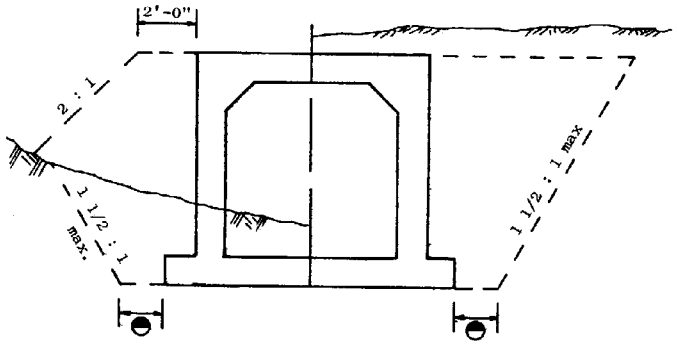

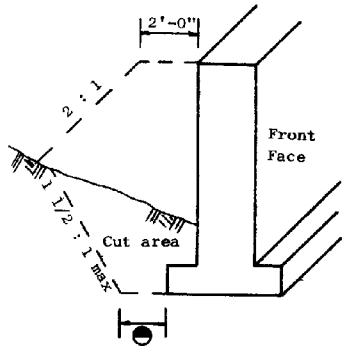

GENERAL NOTES

1. Placement of structure backfill around headwalls and wingwalls shall be the same as around structures.
2. ⊖ 6" min in rock & trench
   1'-6" min all others

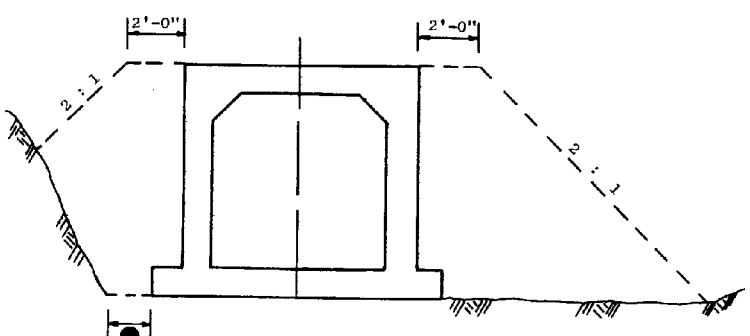

BARREL SECTION

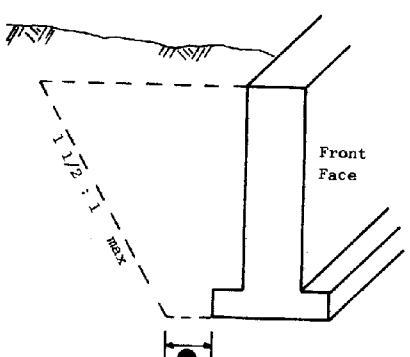

END VIEW WING OF BOX CULVERT

DESIGN APPROVED	STATE OF ARIZONA DEPARTMENT OF TRANSPORTATION DIVISION OF HIGHWAYS STANDARD DRAWINGS	REV 11/83
APPROVED FOR DISTRIBUTION	STRUCTURE BACKFILL PLACEMENT	DRAWING NO. C-13.45

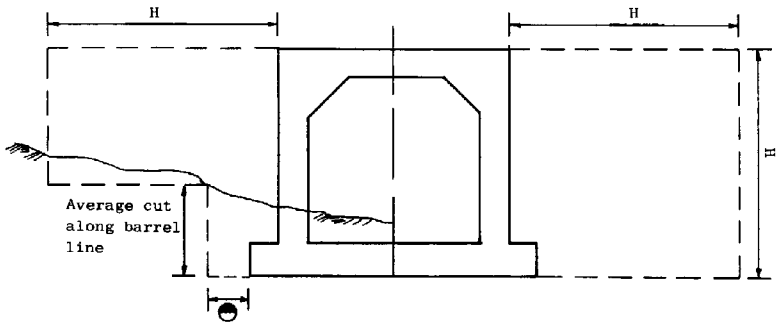

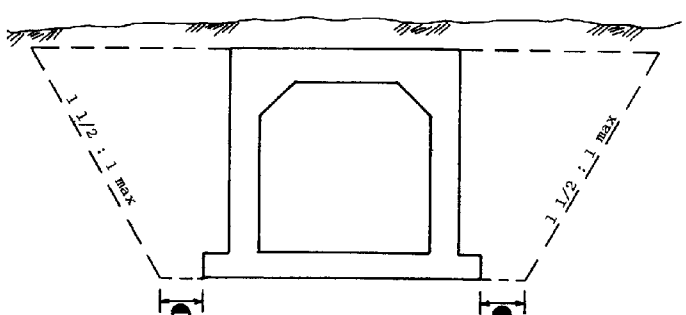

GENERAL NOTES

1. Computation of ▲ Structure Backfill quantities for box culverts is based on the area of a typical installation times((the total length of the structure plus 2H). No measurement is necessary for wing areas. Use H for box extensions on each end extended.
2. H = Height of barrel or headwall w/o cutoff wall.
3. ◓ 6" max in rock & trench
   1'-6" max all others

DESIGN APPROVED	STATE OF ARIZONA DEPARTMENT OF TRANSPORTATION DIVISION OF HIGHWAYS STANDARD DRAWINGS	REV 11/83
APPROVED FOR DISTRIBUTION	STRUCTURE BACKFILL ▲ MEASUREMENT	DRAWING NO. C-13.50

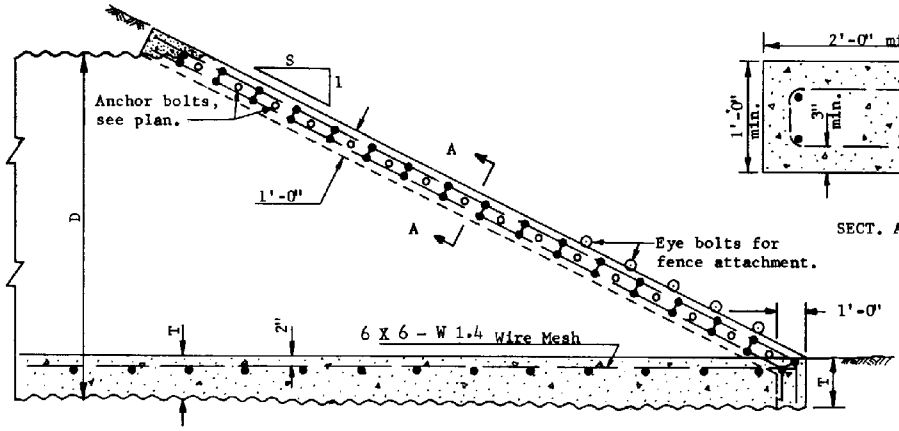

LONGITUDINAL SECTION

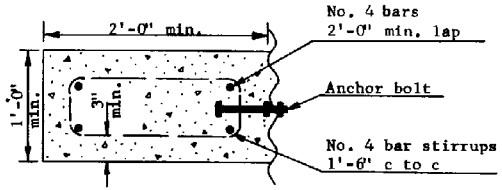

SECT. A-A

	D	T	S
Combination vehicle and cattle pass	144"	1'-6"	Varies
Cattle pass only	120"	6"	Varies

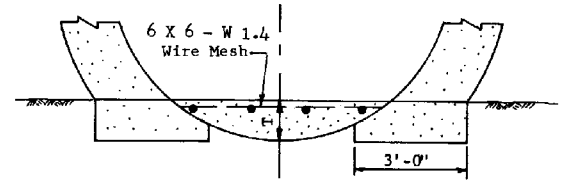

END ELEV.

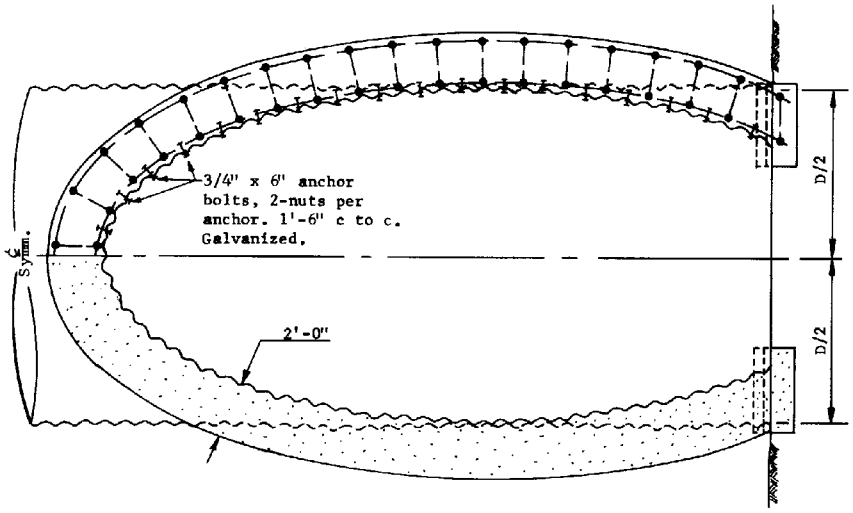

PLAN NORMAL TO SLOPE

GENERAL NOTES

This end treatment is to be used only for those cattle and/or vehicle passes not used for drainage.

All concrete shall be Class B. An optional 12" A.B. invert paving base course and 6" of concrete may be used in the 144" diameter pipe.

Anchor bolts shall be retained in a horizontal position during pour with final tightening a minimum of 7 days after pour.

Pipe shall be backfilled before concrete bond beam is constructed. Minimum forming may be used.

Edges of wire mesh shall be fastened or welded to corrugation crests at intervals and in a manner approved by the Engineer. Laps shall be 6" minimum.

For installation normal to roadway centerline only.

DESIGN APPROVED

APPROVED FOR DISTRIBUTION

STATE OF ARIZONA
DEPARTMENT OF TRANSPORTATION
DIVISION OF HIGHWAYS
STANDARD DRAWINGS

REV. 1/83

PIPE, CATTLE-VEHICLE PASS, MITERED END TREATMENT

DRAWING NO. C-13.55

DIMENSIONS									
I.D.	A	B	C	D	E	L	L + E	F	G
18"	6"	6"	1'-8"	4'-0"	2'-6"	9'-6"	12'-0"	1'-7"	4'-6"
24"	8"	8"	2'-0"	4'-2"	3'-0"	11'-6"	14'-6"	2'-1"	5'-6"
30"	8"	8"	2'-0"	4'-7"	3'-9"	13'-6"	17'-3"	2'-7"	6'-6"
36"	1'-0"	8"	2'-4"	5'-0"	4'-6"	15'-6"	20'-0"	3'-1"	7'-6"
42"	1'-1"	10"	2'-7"	5'-5"	5'-3"	17'-6"	22'-9"	3'-7"	8'-6"
48"	1'-2"	1'-0"	2'-10"	5'-10"	6'-0"	19'-6"	25'-6"	4'-1"	9'-6"

"L" HEADWALL									
I.D.	Conc.C.Y.		Reinf. Steel #4 Bars						lbs.
	For C.M.P.	For Conc. Pipe	a		b		b_1		
			No.	Lgth.	No.	Lgth.	No.	Lgth.	
18"	1.42	1.39	10	4'-8"	6	6'-9"	5	5'-8"	73
24"	2.00	1.96	12	5'-4"	6	8'-3"	6	6'-8"	97
30"	2.53	2.48	14	5'-10"	6	9'-9"	6	7'-8"	118
36"	3.27	3.20	16	6'-8"	6	11'-3"	7	8'-8"	149
42"	4.04	3.95	18	7'-2"	6	12'-9"	7	9'-8"	194
48"	4.94	4.82	20	7'-8"	6	14'-3"	8	10'-8"	215

SINGLE PIPE HEADWALL							
I.D.	Conc.C.Y.		Reinf. Steel #4 Bars				lbs.
	For C.M.P.	For Conc. Pipe	a		b		
			No.	Lgth.	No.	Lgth.	
18"	1.17	1.14	8	4'-8½"	5	9'-3"	56
24"	1.64	1.60	10	5'-4½"	5	11'-3"	74
30"	2.05	2.00	10	5'-10½"	5	13'-3"	83
36"	2.63	2.56	12	6'-8½"	5	15'-3"	105
42"	3.24	3.15	14	7'-2½"	5	17'-3"	125
48"	3.96	3.84	16	7'-8½"	5	19'-3"	147

DOUBLE PIPE HEADWALL							
I.D.	Conc. CY		Reinf. Steel #4 Bars				lbs.
	for CMP	for Conc Pipe	a		b		
			No.	Lgth.	No.	Lgth.	
18"	1.45	1.40	9	4'-8"	5	11'-9"	67
24"	2.00	1.93	10	5'-4"	5	14'-3"	83
30"	2.53	2.43	11	5'-10"	5	17'-0"	100
36"	3.28	3.15	13	6'-8"	5	19'-9"	124
42"	4.04	3.86	15	7'-2"	5	22'-6"	147
48"	4.97	4.74	16	7'-8"	5	25'-3"	156

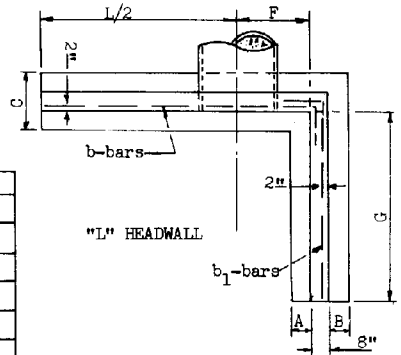

"L" HEADWALL

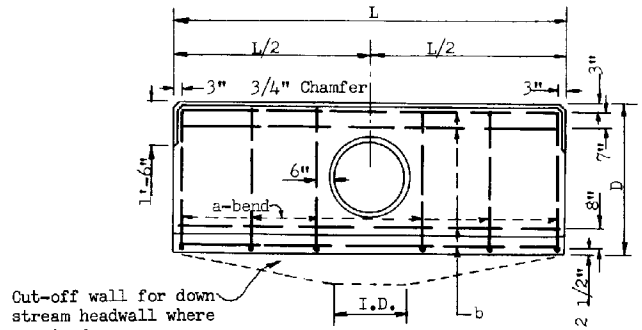

Cut-off wall for down stream headwall where required.

STRAIGHT HEADWALL
SINGLE PIPE

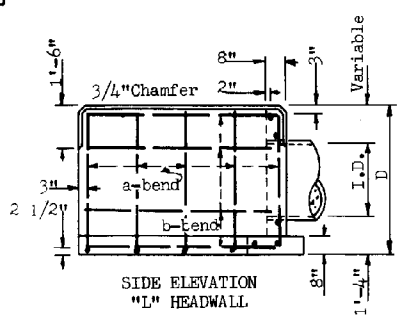

SIDE ELEVATION
"L" HEADWALL

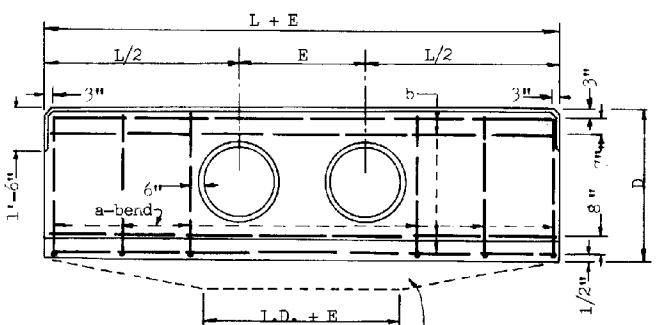

STRAIGHT HEADWALL
DOUBLE PIPE

Cut-off wall for down stream headwall where required.

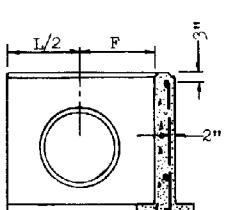

SECTION
"L" HEADWALL

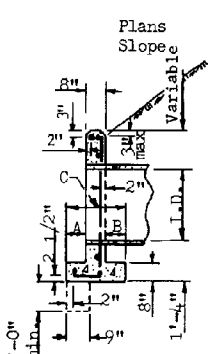

SECTION
STRAIGHT HEADWALL

GENERAL NOTES

1. All concrete shall be Class B
2. High point of headwall shall not project more than 3" above slope.

DESIGN APPROVED	STATE OF ARIZONA DEPARTMENT OF TRANSPORTATION DIVISION OF HIGHWAYS STANDARD DRAWINGS	REV 1/83
APPROVED FOR DISTRIBUTION	HEADWALL, PIPE, STRAIGHT & "L" TYPES	DRAWING NO. C-14.10

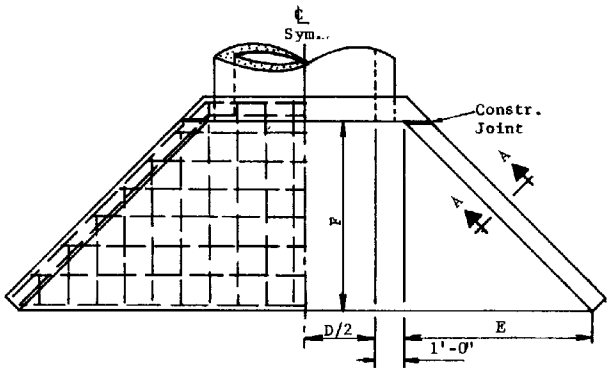

INLET HEADWALL

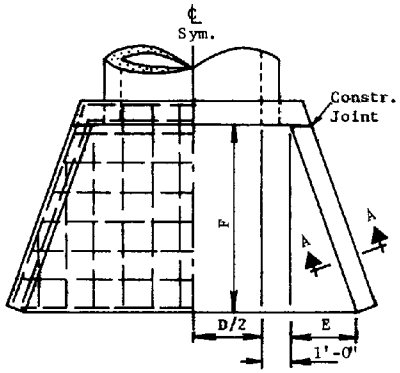

OUTLET HEADWALL

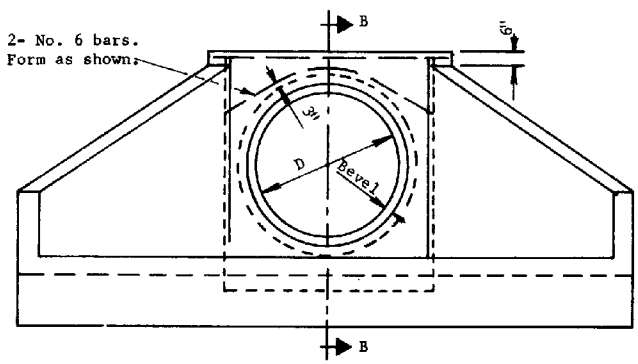

INLET HEADWALL FACE ELEV.-OUTLET SIMILAR

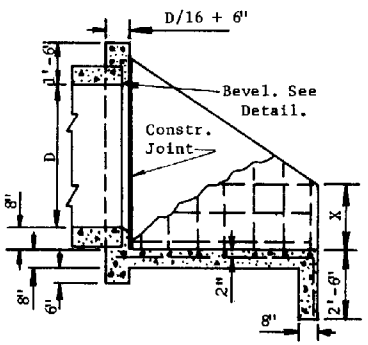

SECTION B-B

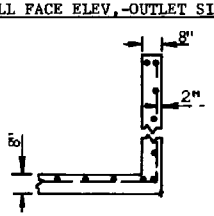

SECTION A-A

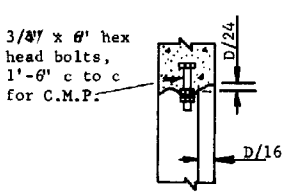

BEVEL DETAIL

D	Type	Dimensions F	Dimensions E	Dimensions X	Conc. (C.Y.) C.M.P.	Conc. (C.Y.) R.C.P.	Reinf. Steel (Lbs.)
		1 1/2:1 Embankment Slope					
42"	1(Inlet)	5'-2"	5'-2"	1'-9"	4.55	4.45	275
	2(Outlet)	5'-2"	1'-11"	1'-9"	3.53	3.45	213
48"	3(Inlet)	5'-8"	5'-8"	1'-11"	5.32	5.20	321
	4(Outlet)	5'-8"	2'-1"	1'-11"	4.12	4.03	249
54"	5(Inlet)	6'-2"	6'-2"	2'-1"	6.14	6.01	370
	6(Outlet)	6'-2"	2'-3"	2'-1"	4.75	4.65	287
60"	7(Inlet)	6'-8"	6'-8"	2'-3"	7.03	6.88	424
	8(Outlet)	6'-8"	2'-5"	2'-3"	5.43	5.31	328
66"	9(Inlet)	7'-2"	7'-2"	2'-5"	7.98	7.81	481
	10(Outlet)	7'-2"	2'-7"	2'-5"	6.16	6.02	372
72"	11(Inlet)	7'-8"	7'-8"	2'-7"	8.99	8.80	542
	12(Outlet)	7'-8"	2'-9"	2'-7"	6.94	6.78	419
78"	13(Inlet)	8'-2"	8'-2"	2'-9"	10.07	9.85	608
	14(Outlet)	8'-2"	3'-0"	2'-9"	7.78	7.61	469
84"	15(Inlet)	8'-8"	8'-8"	2'-11"	11.20	10.96	676
	16(Outlet)	8'-8"	3'-2"	2'-11"	8.66	8.47	522
		4:1 Embankment Slope					
42"	17(Inlet)	8'-8"	8'-8"	3'-0"	7.88	7.70	475
	18(Outlet)	8'-8"	3'-2"	3'-0"	5.59	5.46	337
48"	19(Inlet)	8'-8"	8'-8"	3'-6"	8.47	8.28	511
	20(Outlet)	8'-8"	3'-2"	3'-6"	6.10	5.97	368
54"	21(Inlet)	8'-8"	8'-8"	4'-0"	9.07	8.87	548
	22(Outlet)	8'-8"	3'-2"	4'-0"	6.63	6.48	400
60"	23(Inlet)	9'-4"	9'-4"	4'-4"	10.39	10.16	627
	24(Outlet)	9'-4"	3'-5"	4'-4"	7.60	7.43	458
66"	25(Inlet)	9'-8"	9'-8"	4'-9"	11.42	11.17	689
	26(Outlet)	9'-8"	3'-6"	4'-9"	8.39	8.20	506
72"	27(Inlet)	9'-8"	9'-8"	5'-3"	12.11	11.84	731
	28(Outlet)	9'-8"	3'-6"	5'-3"	8.99	8.80	542
78"	29(Inlet)	10'-0"	10'-0"	5'-8"	13.22	12.93	798
	30(Outlet)	10'-0"	3'-8"	5'-8"	9.88	9.66	596
84"	31(Inlet)	10'-8"	10'-8"	6'-0"	14.81	14.48	893
	32(Outlet)	10'-8"	3'-11"	6'-0"	11.00	10.76	664

GENERAL NOTES

1. All concrete shall be Class B
2. All rebars shall be No. 4 except 2-formed bars over pipe. Bar spacing shall be 1'-0" c to c.
3. High point of headwall shall not project more than 3" above slope.
4. For skewed pipe dimensions, see Std. C-14.21
5. Bevel is required only on inlet headwalls. Bell end of concrete pipe may replace bevel.

DESIGN APPROVED

APPROVED FOR DISTRIBUTION

STATE OF ARIZONA
DEPARTMENT OF TRANSPORTATION
DIVISION OF HIGHWAYS
STANDARD DRAWINGS

HEADWALL, NORMAL TO PIPE
42" - 84" PIPE

REV. 1/83

DRAWING NO. C-14.20

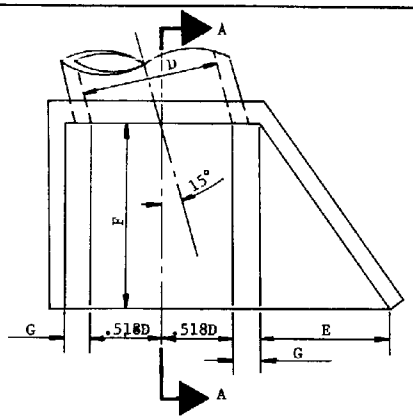

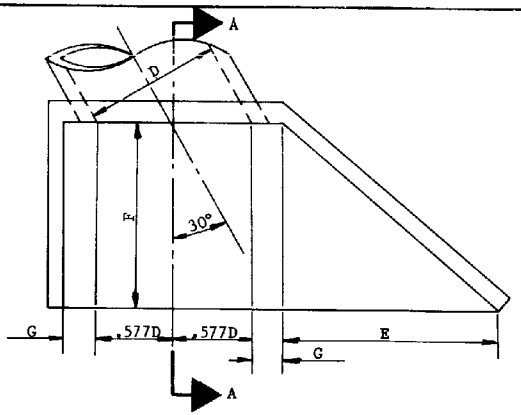

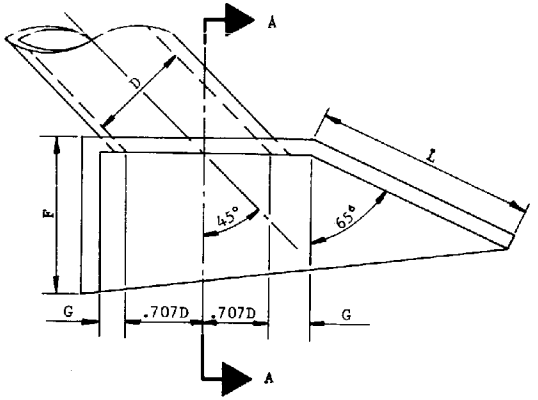

D	Type	Dimensions E	F	G	X*	Conc. (CY) CMP	RCP	Reinf. Steel (Lbs.)
1 1/2:1 Embankment Slope								
42"	1	3'-7"	5'-2"	0'-8"	1'-9"	3.46	3.38	208
48"	2	4'-0"	5'-8"	0'-9"	1'-11"	4.03	3.94	246
54"	3	4'-4"	6'-2"	0'-9"	2'-1"	4.66	4.56	285
60"	4	4'-8"	6'-8"	0'-10"	2'-3"	5.41	5.29	324
66"	5	5'-0"	7'-2"	0'-11"	2'-5"	6.21	6.07	374
72"	6	5'-4"	7'-8"	0'-11"	2'-7"	7.01	6.86	421
78"	7	5'-9"	8'-2"	1'-0"	2'-9	7.94	7.76	479
84"	8	6'-1"	8'-8"	1'-1"	2'-11"	8.74	8.54	529
4:1 Embankment Slope								
42"	9	6'-1"	8'-8"	0'-8"	3'-0"	5.32	5.20	338
48"	10	6'-1"	8'-8"	0'-9"	3'-6"	6.01	5.88	369
54"	11	6'-1"	8'-8"	0'-9"	4'-0"	6.55	6.41	400
60"	12	6'-6"	9'-4"	0'-10"	4'-4"	7.55	7.38	453
66"	13	6'-9"	9'-8"	0'-11"	4'-9"	8.48	8.30	512
72"	14	6'-9"	9'-8"	0'-11"	5'-3"	8.90	8.70	552
78"	15	7'-0"	10'-0"	1'-0"	5'-8"	10.08	9.86	608
84"	16	7'-6"	10'-8"	1'-1"	6'-0"	11.38	11.13	687

15° Sk. Headwalls

D	Type	Dimensions E	F	G	X*	Conc. (CY) CMP	RCP	Reinf. Steel (Lbs.)
1 1/2:1 Embankment Slope								
42"	17	6'-2"	5'-2"	1'-0"	1'-9"	4.07	3.98	245
48"	18	6'-9"	5'-8"	1'-0"	1'-11"	4.76	4.66	286
54"	19	7'-4"	6'-2"	1'-1"	2'-1"	5.58	5.46	337
60"	20	7'-11"	6'-8"	1'-2"	2'-3"	6.47	6.33	391
66"	21	8'-6"	7'-2"	1'-3"	2'-5"	7.41	7.25	448
72"	22	9'-2"	7'-8"	1'-4"	2'-7"	8.51	8.32	508
78"	23	9'-9"	8'-2"	1'-4"	2'-9"	9.46	9.25	567
84"	24	10'-4"	8'-8"	1'-5"	2'-11"	10.61	10.37	632
4:1 Embankment Slope								
42"	25	10'-4"	8'-8"	1'-0"	3'-0"	6.70	6.56	415
48"	26	10'-4"	8'-8"	1'-0"	3'-6"	7.29	7.13	451
54"	27	10'-4"	8'-8"	1'-1"	4'-0"	7.97	7.79	481
60"	28	11'-1"	9'-4"	1'-2"	4'-4"	9.21	9.01	559
66"	29	11'-6"	9'-8"	1'-3"	4'-9"	10.25	10.03	619
72"	30	11'-6"	9'-8"	1'-4"	5'-3"	11.04	10.80	666
78"	31	11'-11"	10'-0"	1'-4"	5'-8"	12.11	11.84	734
84"	32	12'-9"	10'-8"	1'-5"	6'-0"	13.65	13.35	826

30° Sk. Headwalls

D	Type	Dimensions F	G	L	X*	X'*	Conc. (CY) CMP	RCP	Reinf. Steel (Lbs.)
1 1/2:1 Embankment Slope									
42"	33	5'-2"	1'-5"	9'-6"	1'-9"	2'-6"	5.27	5.16	316
48"	34	5'-8"	1'-6"	9'-6"	1'-11"	3'-0"	6.11	5.99	367
54"	35	6'-2"	1'-7"	9'-6"	2'-1"	3'-6"	7.09	6.95	426
60"	36	6'-8"	1'-8"	9'-9"	2'-3"	3'-11"	8.16	8.00	490
66"	37	7'-2"	1'-9"	9'-9"	2'-5"	4'-5"	9.30	9.11	558
72"	38	7'-8"	1'-10"	9'-9"	2'-7"	4'-11"	10.60	10.39	636
78"	39	8'-2"	1'-11"	10'-1"	2'-9"	5'-4"	11.65	11.42	699
84"	40	8'-8"	2'-0"	10'-4"	2'-11"	5'-9"	12.94	12.68	777
4:1 Embankment Slope									
42"	41	8'-8"	1'-5"	10'-10"	3'-0"	4'-0"	6.98	6.84	419
48"	42	8'-8"	1'-6"	10'-10"	3'-6"	4'-6"	7.61	7.46	457
54"	43	8'-8"	1'-7"	10'-10"	4'-0"	5'-0"	8.29	8.12	498
60"	44	9'-4"	1'-8"	11'-8"	4'-4"	5'-5"	9.62	9.43	577
66"	45	9'-8"	1'-9"	12'-1"	4'-9"	5'-11"	10.68	10.47	641
72"	46	9'-8"	1'-10"	12'-1"	5'-3"	6'-5"	11.53	11.30	692
78"	47	10'-0"	1'-11"	12'-6"	5'-8"	6'-10"	12.69	12.44	762
84"	48	10'-8"	2'-0"	13'-4"	6'-0"	7'-3"	14.15	13.87	849

45° Sk. Headwalls

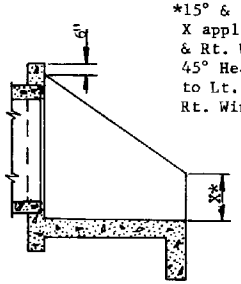

Section A-A

*15° & 30° Sk. Headwalls, X applies to both Lt. & Rt. Wings.
45° Headwalls, X applies to Lt. Wing and X' to Rt. Wing.

For other headwall dimensions, steel reinforcing, inlet bevel and other details not shown, see Std. C-14.20

For skewed installations, inlet and outlet headwall types are identical for equal embankment slopes.

For inlet and outlet wingwall flare differences for headwalls normal to pipe, see Std. C-14.20

See Structures Section Standards for headwall design for pipes over 84" Dia.

DESIGN APPROVED

APPROVED FOR DISTRIBUTION

STATE OF ARIZONA
DEPARTMENT OF TRANSPORTATION
DIVISION OF HIGHWAYS
STANDARD DRAWINGS

REV. 1/83

HEADWALLS, 42" - 84" PIPE SKEWED

DRAWING NO. C-14.21

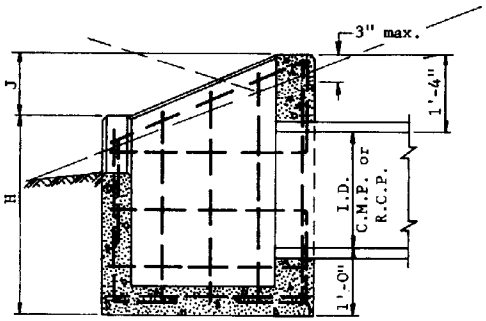

SECTION Z-Z

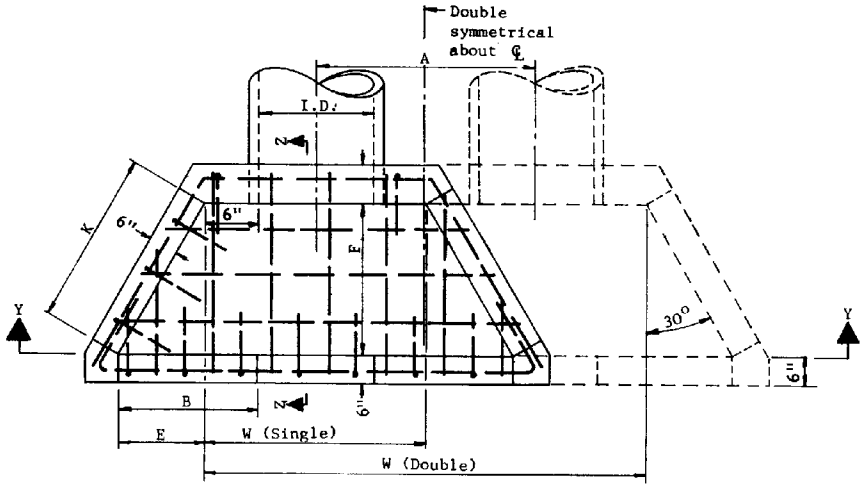

PLAN

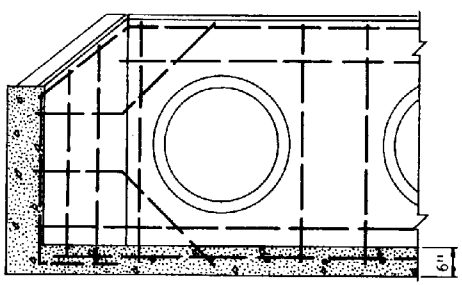

SECTION Y-Y

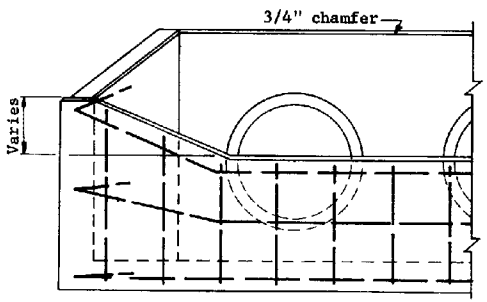

ELEVATION

GENERAL NOTES

1. See also Std. C-13.10
2. High point of headwall shall not project more than 3" above slope.
3. All concrete shall be Class B
4. All reinforcing bars shall be number 4, 1'-0" c to c and 3" clear to inside of walls and floor.

PIPE	DIMENSIONS									QUANTITIES					
										CONC. C.Y.				REINF. STEEL LBS.	
										Single		Double			
I.D.	W Single	W Double	A	B	E	F	H	J	K	C.M.P.	For Conc. Pipe Deduct	C.M.P.	For Conc. Pipe Deduct	Single	Double
18"	2'-6"	5'-2"	2'-8"	1'-3"	9"	1'-3 5/8"	3'-1"	9"	1'-6"	0.76	0.03	1.12	0.06	75	107
24"	3'-0"	6'-6"	3'-6"	1'-7 1/2"	1'-1 1/2"	1'-11 3/8"	3'-5"	11"	2'-3"	1.00	0.04	1.55	0.09	92	136
30"	3'-6"	7'-10"	4'-4"	2'-0"	1'-6"	2'-7 1/4"	3'-9"	1'-1"	3'-0"	1.50	0.06	2.29	0.13	112	166
36"	4'-0"	9'-2"	5'-2"	2'-4 1/2"	1'-10 1/2"	3'-3"	4'-0"	1'-4"	3'-9"	1.96	0.09	3.01	0.17	145	214
42"	4'-6"	10'-6"	6'-0"	2'-9"	2'-3"	3'-10 3/4"	4'-4"	1'-6"	4'-6"	2.49	0.11	3.85	0.23	189	279

DESIGN APPROVED

APPROVED FOR DISTRIBUTION

STATE OF ARIZONA
DEPARTMENT OF TRANSPORTATION
DIVISION OF HIGHWAYS
STANDARD DRAWINGS

HEADWALL, DROP INLET

REV. 1/83

DRAWING NO. C-14.30

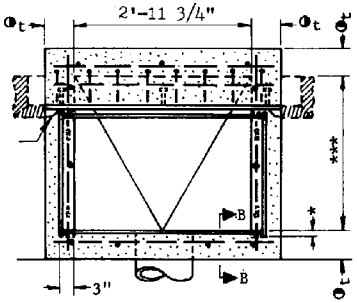

PLAN-CATCH BASIN TYPE 1 - SINGLE

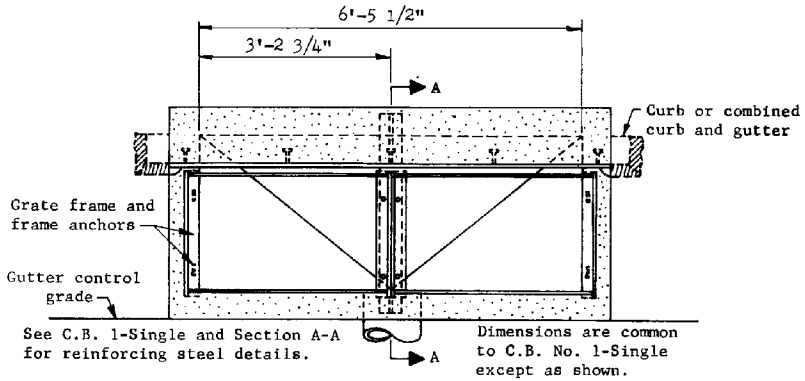

PLAN-CATCH BASIN TYPE 1 - DOUBLE

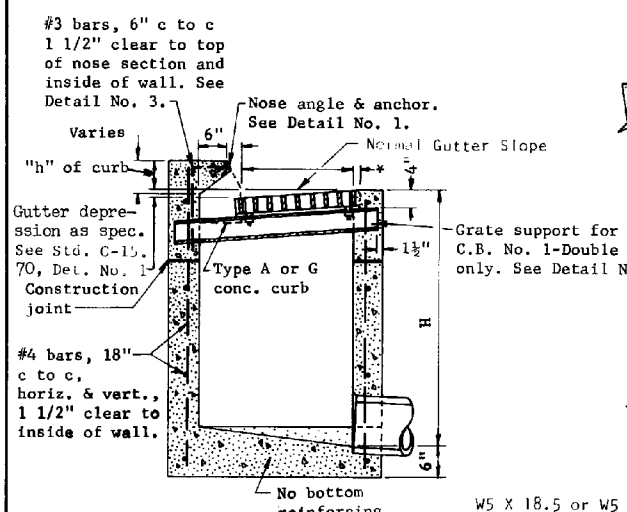

SECTION A-A

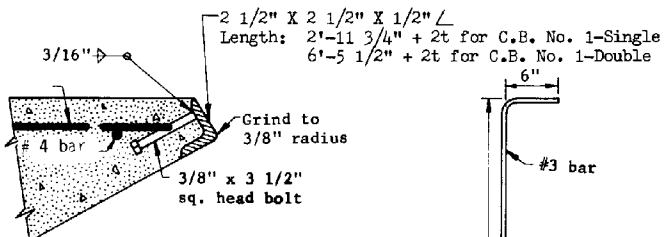

DETAIL NO. 1

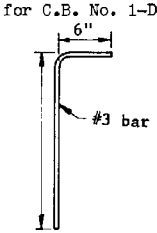

DETAIL NO. 3

NOTE: Provide Std. C-15.70 Construction Drain.

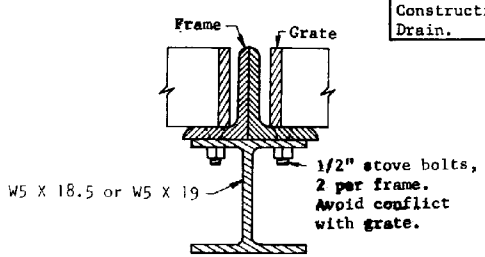

DETAIL NO. 2

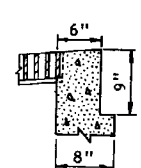

SECTION B-B

Use this section when t = 8"

GENERAL NOTES

Pipes can be placed in any wall.

Floor shall have a wood trowel finish and a minimum 4:1 slope in all directions to outlet.

All structural steel shall be ASTM A 36.

Welding shall be in accordance with Std. Welding Specifications.

Grate, frame, beam and nose angle shall be given one shop coat of No. 1 paint.

Concrete shall be Class B

Construction joints and drains shall be placed to meet field conditions. See Std. C-15.70

Any specified gutter depression shall be warped to opening according to Std. C-15.70

Curb opening areas, sq. ft., for Type 1-Single and Type 1-Double equal 0.25 and 0.54, respectively, for each inch of "h" + gutter depression —2.35". See Std. C-15.70

For grate and frame details and grate opening areas, see Stds. C-15.50 & C-15.60

*3/4" for longitudinal and 3" for transverse bar grates.

** 2'-0" for LW, LB, EF, TW and TB series 1 grates. 1'-6" for LW, LB, EF, TW and TB series 2 grates. Use 1'-6" with combined curb and gutter.

*** 2'-8½" for LW, LB, TW and TB series 1 grates. 2'-2½" for LW, LB, TW and TB series 2 grates.

◑ t=6" when H is 8' or less; 8" when H is over 8". See Sect. B-B.

DESIGN APPROVED: W. A. Wakefield	STATE OF ARIZONA DEPARTMENT OF TRANSPORTATION DIVISION OF HIGHWAYS STANDARD DRAWINGS	REV. 6/86
APPROVED FOR DISTRIBUTION: James A. McGee	CATCH BASIN, TYPE 1	DRAWING NO. C-15.10

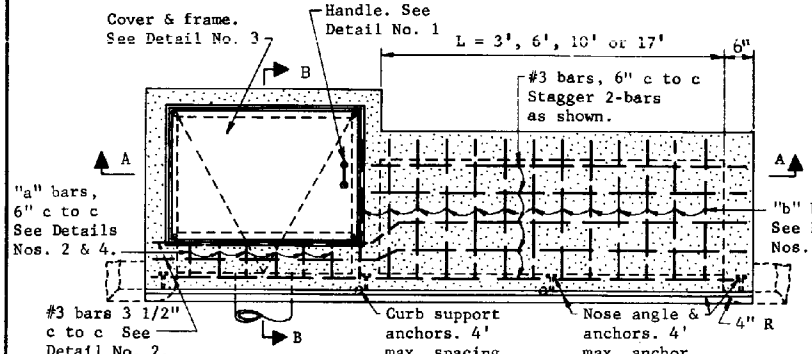

Note: Reinf. bars shown are for roof slab only. See Sections for other reinf.

PLAN

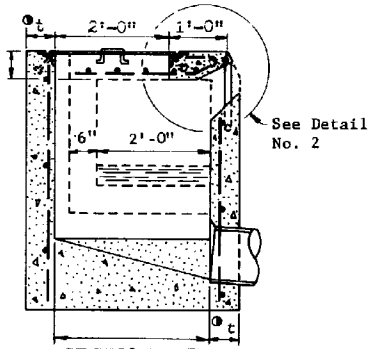

SECTION B-B

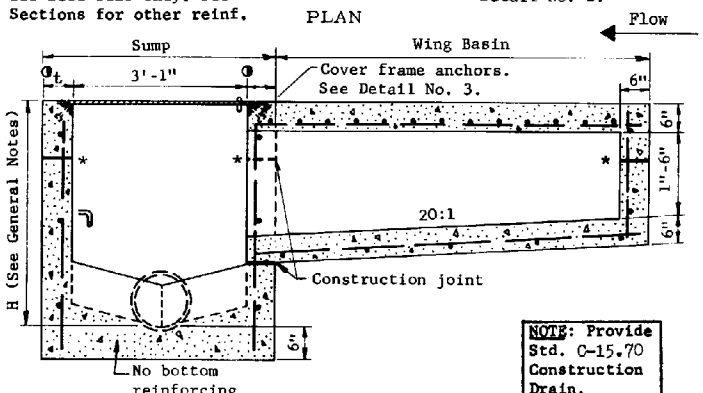

SECTION A-A

NOTE: Provide Std. C-15.70 Construction Drain.

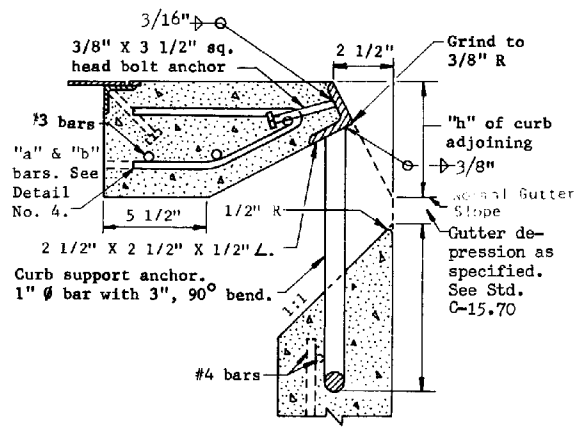

DETAIL NO. 2

GENERAL NOTES

Type 3 - Sump Only.

Type 3-Wing(illustrated), sump with wing basin upstream.

Type 3-Double wing, sump with symmetrical wing basin each side.

Pipes can be placed in any wall except wall adjacent to wing basin.

Sump floor shall have a wood trowel finish and a minimum slope of 4:1 in all directions toward outlet pipe.

Gutter depression shall be warped to opening according to Std. C-15.70

All structural steel shall be ASTM A 36.

Nose angle, frame and cover shall be given one shop coat of No. 1 paint.

All concrete shall be Class B

All reinforcing bars shall be #4, 1'-6" c to c both ways and 1 1/2" clear to inside of walls and outside of wing basin floor except as shown.

Curb opening area (Sq. Ft.) per inch of curb "h" + gutter depression = curb opening length (ft.) X 0.0833.

Welding shall be in accordance with Standard Welding Specifications.

* Construction joints at or below bottom of curb line. Construction joints and drains shall be placed to meet field conditions. See Std. C-15.70

◑ t = 6" when H = 8' or less
8" when H is greater than 8'.
See Sect. B-B, Std. C-15.01.

H = 2'-10" min. when L = 3'
3'-0" min. when L = 6'
3'-2" min. when L = 10'
3'-7" min. when L = 17'

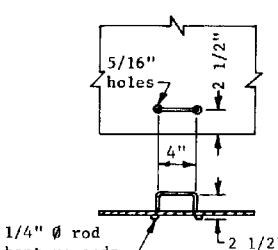

DETAIL NO. 1

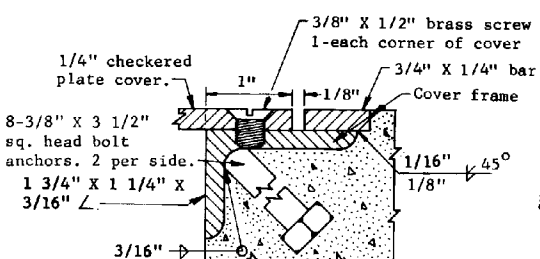

DETAIL NO. 3

Miter frame sections 45° butt weld and surface grind.

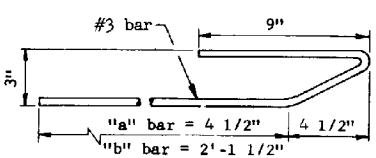

DETAIL NO. 4

DESIGN APPROVED	STATE OF ARIZONA DEPARTMENT OF TRANSPORTATION DIVISION OF HIGHWAYS STANDARD DRAWINGS	6/86
APPROVED FOR DISTRIBUTION	CATCH BASIN, TYPE 3	DRAWING NO C-15.20

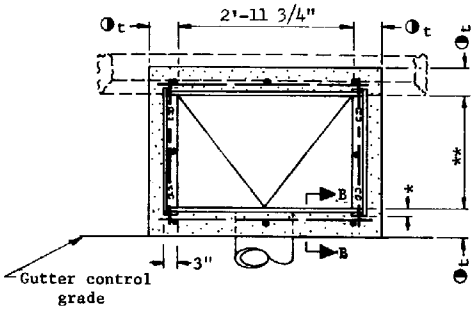

PLAN, CATCH BASIN TYPE 4 - SINGLE

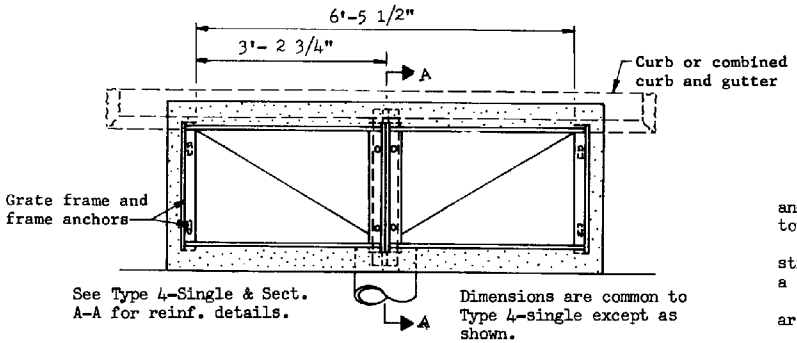

PLAN, CATCH BASIN TYPE 4 - DOUBLE

NOTE: Provide Std. C-15.70 Construction Drain.

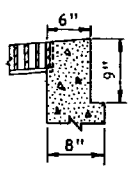

SECTION B-B

Use this section when t = 8"

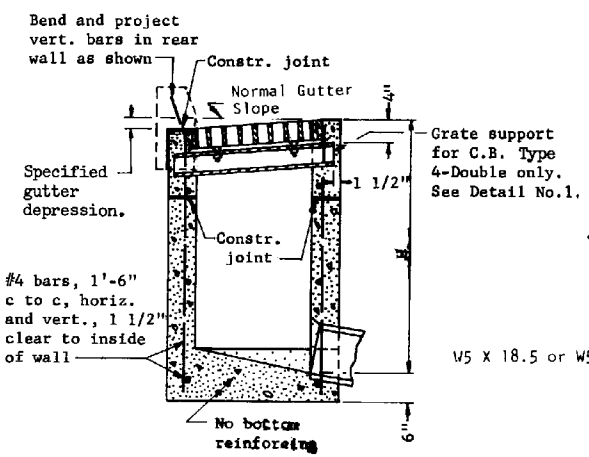

SECTION A-A

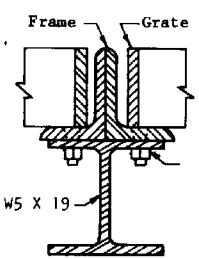

DETAIL NO. 1

GENERAL NOTES

Pipes can be placed in any wall.

Sump floor shall have a wood trowel finish and a minimum slope of 4:1 in all directions toward outlet pipe.

Curb over catch basin shall not be constructed until catch basin concrete has set for a minimum of 24 hours.

For grate and frame details and opening areas, see Stds. C-15.50 & C-15.60 .

Any specified gutter depression shall be warped to opening according to Std. C-15.70

All structural steel shall be ASTM A 36.

Grate, frame and beam shall be given one shop coat of No. 1 paint.

All concrete shall be Class B

Construction joints & drains shall be placed to meet field conditions. See Std. C-15.70

* 3/4" for longitudinal and 3" for transverse bar grates.

** 2'-0" for LW, LB, EF, TW and TB series 1 grates. 1'-6" for LW, LB, EF, TW and TB series 2 grates. Use 1'-6" with combined curb & gutter.

◑ t=6" when H=8' or less; 8" when H is greater than 8'. See Section B-B.

DESIGN APPROVED	STATE OF ARIZONA DEPARTMENT OF TRANSPORTATION DIVISION OF HIGHWAYS STANDARD DRAWINGS	REV. 6/86
APPROVED FOR DISTRIBUTION	CATCH BASIN, TYPE 4	DRAWING NO. C-15.30

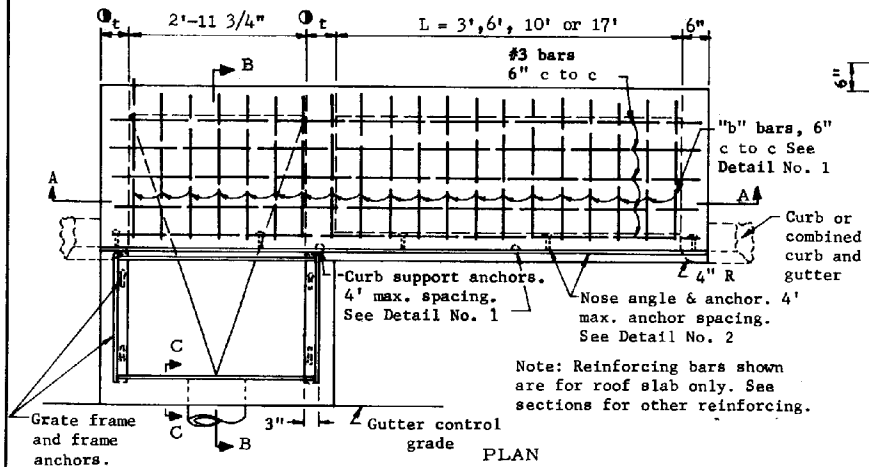

PLAN

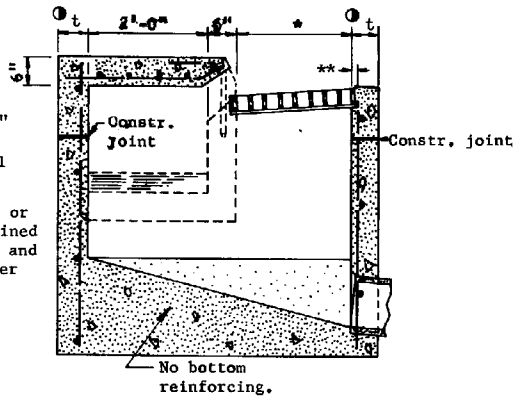

SECTION B-B

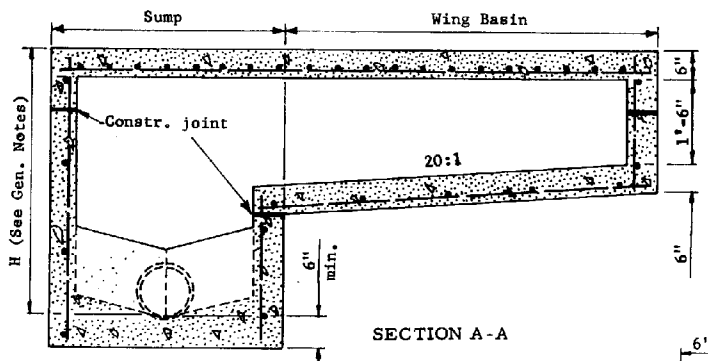

SECTION A-A

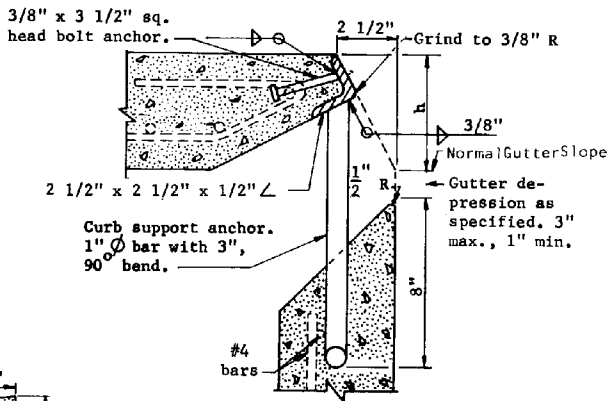

DETAIL NO. 2

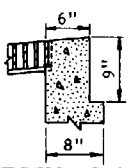

SECTION C-C
Use this section when t = 8"

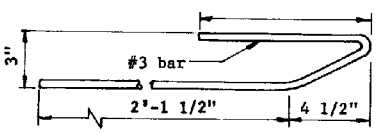

DETAIL NO. 1

NOTE: Provide Std. C-15.70 Construction Drain.

GENERAL NOTES

C.B. 5, sump only.

C.B. 5 Single, (illustrated), sump with wing basin upstream.

C.B. 5 Double, sump with symmetrical wing basins each side.

Pipes can be placed in any wall except wall adjacent to a wing basin.

Sump floor shall have a wood trowel finish and a minimum slope of 4:1 in all directions toward outlet pipe.

Welding shall be in accordance with Std. Welding Specifications.

Gutter depression shall be warped to opening according to Std. C-15.70

All structural steel shall be in accordance with ASTM A 36.

Nose angle shall be painted with one No. 1 shop coat.

All concrete shall be Class B

All reinforcing bars shall be #4, 18" c to c both ways and 1 1/2" clear to inside of walls and outside of wing basin floor except as shown.

Curb opening area (Sq. Ft.) per inch of curb "h" + gutter depression = curb opening length (Ft.) X 0.0834.

For grate and frame details and opening areas, see Stds. C-15.50 & C-15.60

Construction joints shall be placed to meet field conditions.

t = 6" when H = 8' or less; 8" when H is greater than 8'. (See Section C-C)

* 2'-0" for LW, LB, EF, TW and TB series 1 grates. 1'-6" for LW, LB, EF, TW and TB series 2 grates. Use 1'-6" with combined curb and gutter.

** 3/4" for longitudinal and 3" for transverse bar grates.

H=3'-3" min. when L=3'
H=3'-5" min. when L=6'
H=3'-7" min. when L=10'
H=4'-0" min. when L=17'

DESIGN APPROVED	STATE OF ARIZONA DEPARTMENT OF TRANSPORTATION DIVISION OF HIGHWAYS STANDARD DRAWINGS	REV 6/86
APPROVED FOR DISTRIBUTION	CATCH BASIN, TYPE 5	DRAWING NO. C-15.40

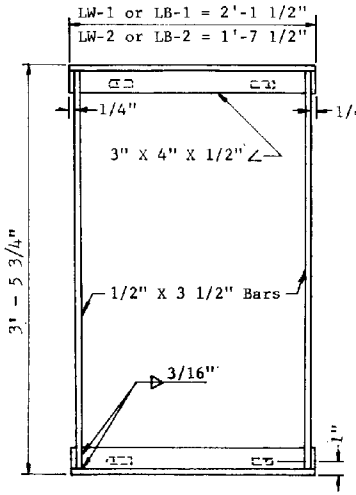

PLAN

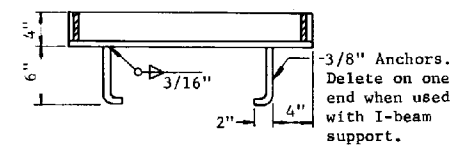

SECTION

FRAME

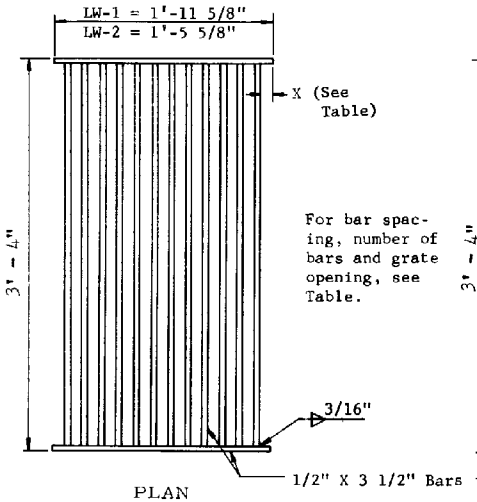

PLAN

For bar spacing, number of bars and grate opening, see Table.

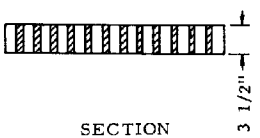

SECTION

GRATES TYPE LW & EF
Restrict to slopes of 3% or less.

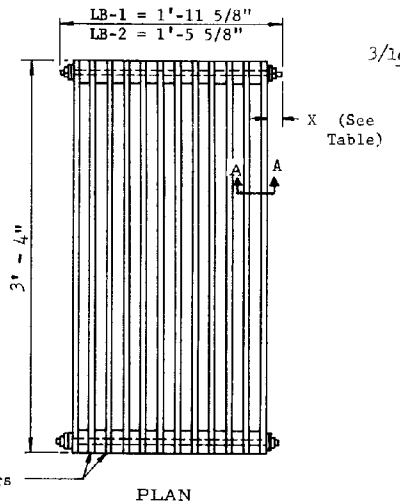

PLAN

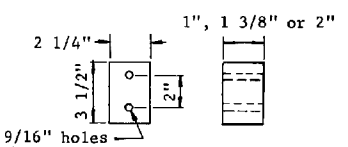

BAR SPACER DETAIL
Cast iron, cast steel or steel bar stock.

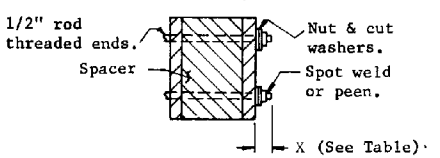

SECTION A-A'

GRATES TYPE LB
Use on longitudinal grades in excess of 3% or as an alternate to Types LW or EF on grades of 3% or less.

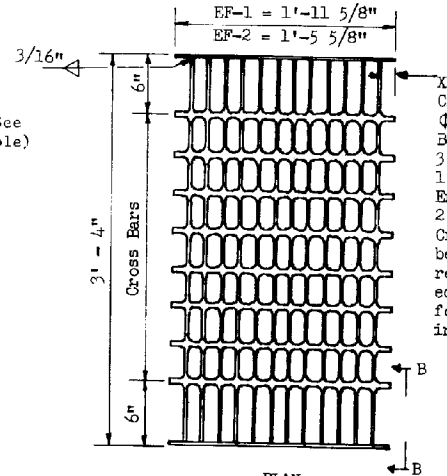

PLAN

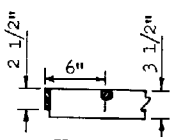

SECT. B-B

GRATE TYPE	CLEAR BAR SPACING	NO. BARS	X	GRATE OPENING SQ. FT.
LW or LB - 1.0	1"	16	5/16"	3.97
" " - 1.1	1 3/8"	13	5/16"	4.34
" " - 1.2	2"	9	1 9/16"	4.84
EF - 1	1 5/8"	13	7/16"	4.66
LW or LB - 2.0	1"	12	5/16"	2.98
" " - 2.1	1 3/8"	9	1 1/16"	3.35
" " - 2.2	2"	7	1 1/16"	3.60
EF - 2	1 5/8"	10	1/4"	3.48

GENERAL NOTES

LW indicates longitudinal welded.
LB indicates longitudinal bolted.
EF indicates electroforged.

Grating units and frames shall be fabricated from structural steel ASTM A 36 except as noted.

All welding shall be in accordance with Standard Welding Specifications.

The completed assembly shall be given one shop coat of No. 1 paint.

Frames and grates shall fit to a maximum rock of 0.093" at any point.

DESIGN APPROVED	STATE OF ARIZONA DEPARTMENT OF TRANSPORTATION DIVISION OF HIGHWAYS STANDARD DRAWINGS	REV. 1/83
APPROVED FOR DISTRIBUTION	CATCH BASIN, GRATES, LONGITUDINAL BARS	DRAWING NO. C-15.50

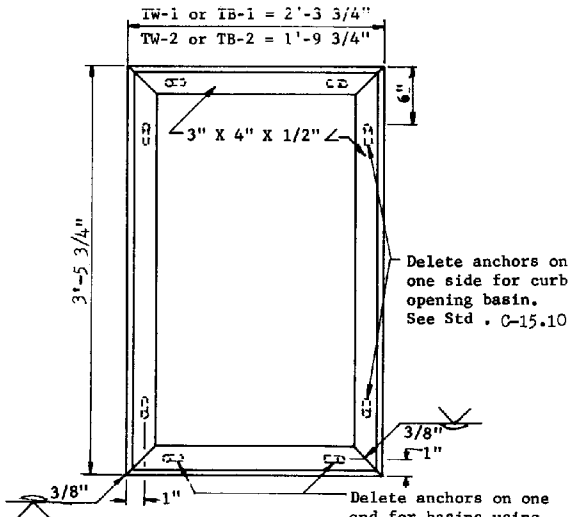

PLAN

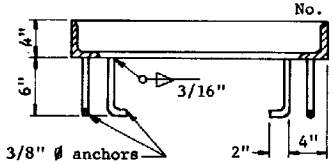

SECTION

FRAME

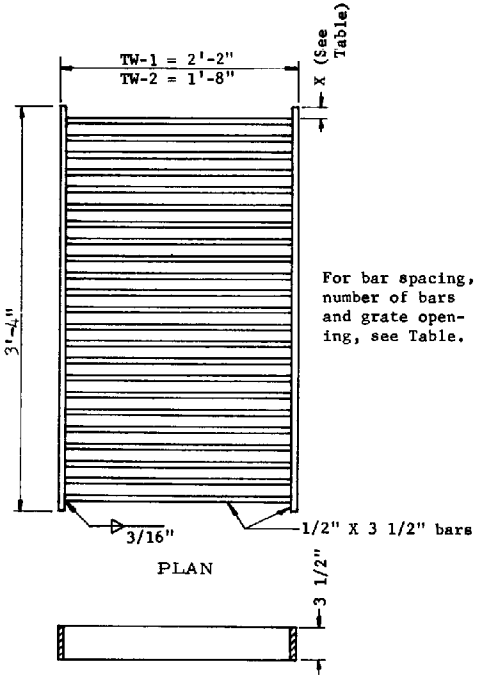

PLAN

SECTION

GRATE TYPES TW-1 & TW-2

NOTE: See also Type EF grates, Std. C-15.50.

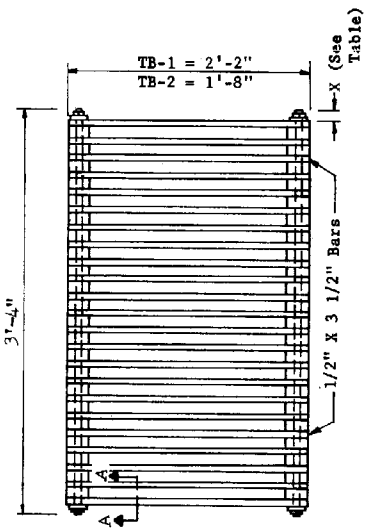

PLAN

GRATE TYPES TB-1 & TB-2

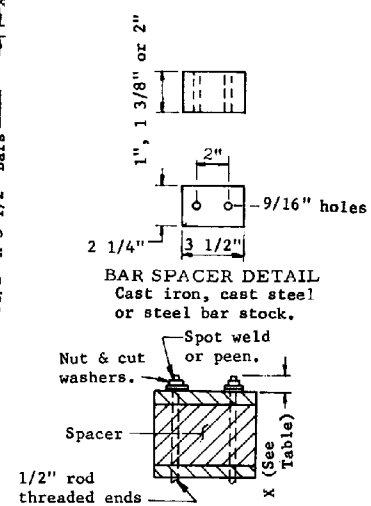

BAR SPACER DETAIL
Cast iron, cast steel or steel bar stock.

SECTION A-A

Type	Clear Spacing	No. Bars	X	Grate Opening Sq. Ft.
TW or TB-1.0	1"	26	1"	3.21
TW or TB-1.1	1 3/8"	21	1"	3.32
TW or TB-1.2	2"	16	1"	4.66
TW or TB-2.0	1"	26	1"	2.32
TW or TB-2.1	1 3/8"	21	1"	2.41
TW or TB-2.2	2"	16	1"	2.65

GENERAL NOTES

Grating units and frames shall be fabricated from structural steel except as noted. Structural steel shall be in accordance with ASTM A 36.

Welding shall be in accordance with Standard Welding Specifications.

The completed assembly shall be given one shop coat of No. 1 paint.

TW indicates transverse welded.

TB indicates transverse bolted.

Frame and grate shall fit to a max. rock of 0.093" at any point.

Restrict use to grades of 3% or less.

DESIGN APPROVED	STATE OF ARIZONA DEPARTMENT OF TRANSPORTATION DIVISION OF HIGHWAYS STANDARD DRAWINGS	REV. 1/83
APPROVED FOR DISTRIB.	CATCH BASIN, GRATES TRANSVERSE BARS	DRAWING NO. C-15.60

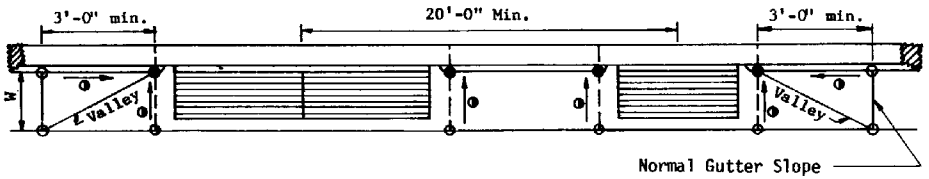

GUTTER DEPRESSION AND SPACING
CATCH BASIN TYPES 1, 4 & 5

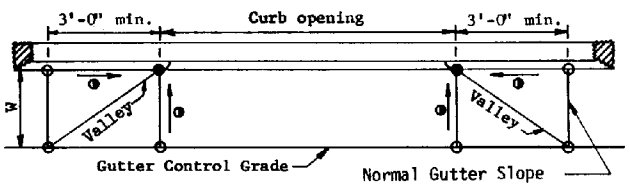

GUTTER DEPRESSION
CATCH BASIN TYPE 3

LEGEND

Gutter depression: 3" max. (See Detail No. 1)

○ = Normal pavement or gutter flow line elev.

● = Depressed elevation.

= Straight grade with downward slope.

W = Normal gutter width per Std. C-05.10

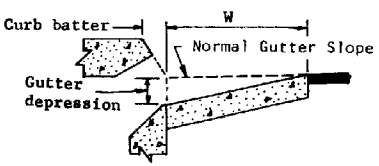

DETAIL NO. 1

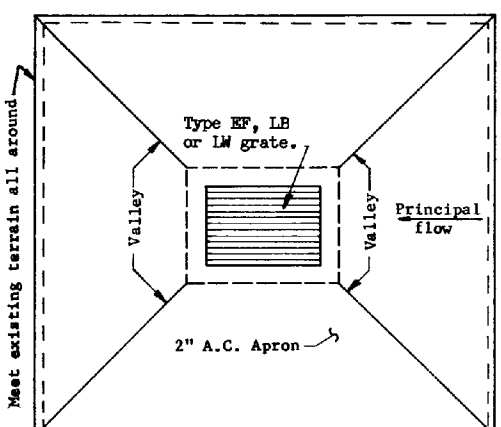

CATCH BASIN TYPE 4
(Off roadway location)

Apron shall be shaped to suit local conditions and shall extend a minimum of 4'-0" from edge of grate in all directions. Grate shall be depressed a minimum of 4" below surrounding terrain and bearing bars shall parallel direction of principal flow.

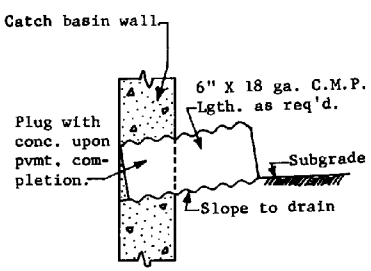

CATCH BASIN
CONSTRUCTION DRAIN
Drain may be deleted at option of Engineer

GENERAL NOTES

No gutter depression shall extend into a traffic lane.

DESIGN APPROVED	STATE OF ARIZONA DEPARTMENT OF TRANSPORTATION DIVISION OF HIGHWAYS STANDARD DRAWINGS	REV. 6/86
APPROVED FOR DISTRIBUTION	CATCH BASIN MISC. DETAILS	DRAWING NO. C-15.70

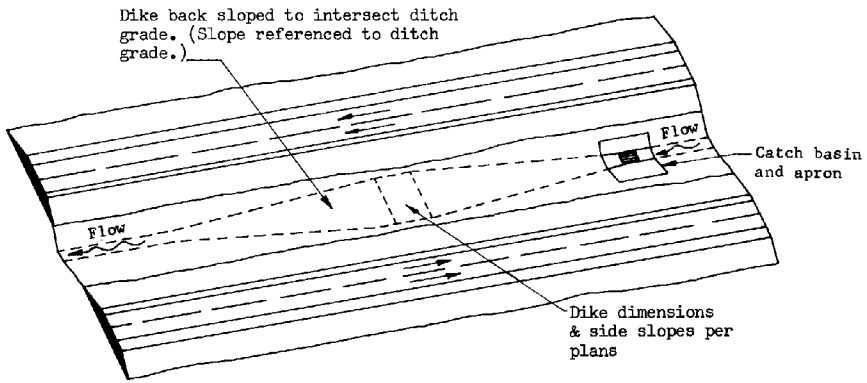

PLAN PERSPECTIVE
ILLUSTRATING 1-WAY FLOW WITH DYKE

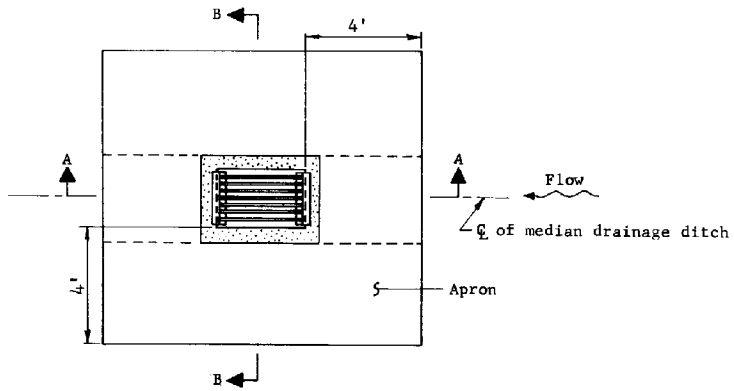

PLAN

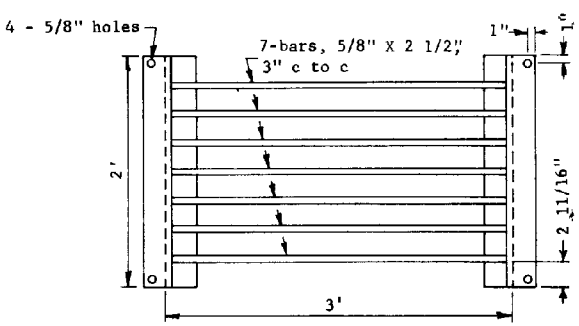

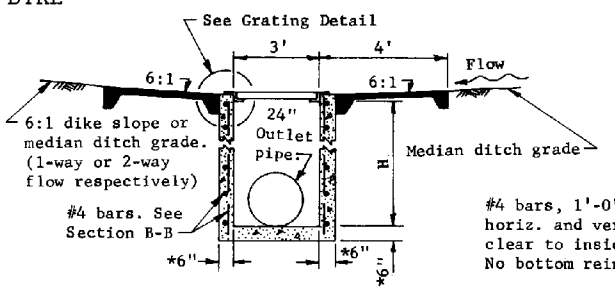

SECTION A-A

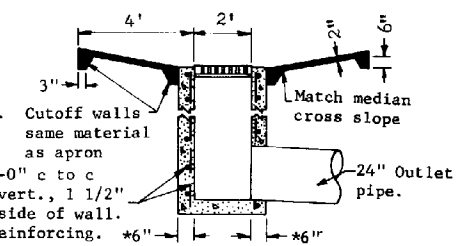

SECTION B-B

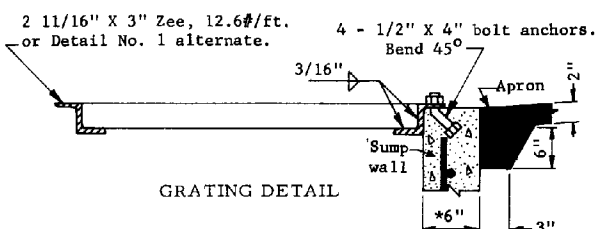

GRATING DETAIL

* 8" when wall height exceeds 8'.

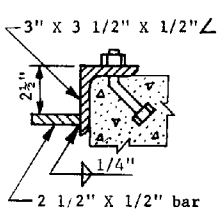

DETAIL NO. 1

GENERAL NOTES

Apron shall be A.C. or P.C. concrete as specified on Plans.
Concrete shall be Class B.
Grating shall be fabricated of structural steel.
Structural steel shall be in accordance with ASTM A 36.
Welding shall be in accordance with Standard Welding Specifications.
Grating assembly shall be given one shop coat of No. 1 paint.
"H" indicated on Plans.

DESIGN APPROVED	STATE OF ARIZONA DEPARTMENT OF TRANSPORTATION DIVISION OF HIGHWAYS STANDARD DRAWINGS	REV. 1/83
APPROVED FOR DISTRIBUTION	CATCH BASIN, MEDIAN FLUSH	DRAWING NO. C-15.80

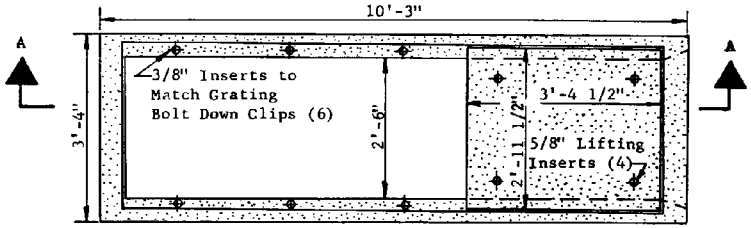

PLAN

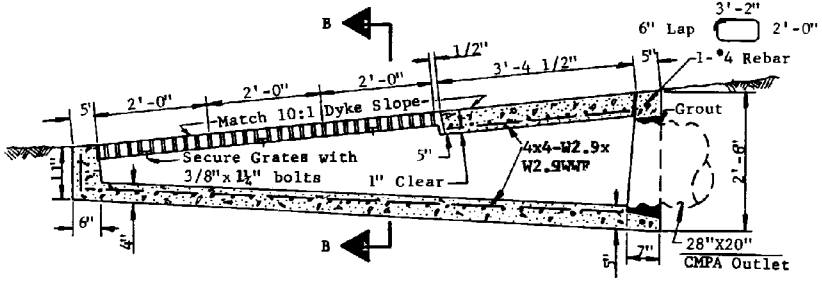

SECTION A-A

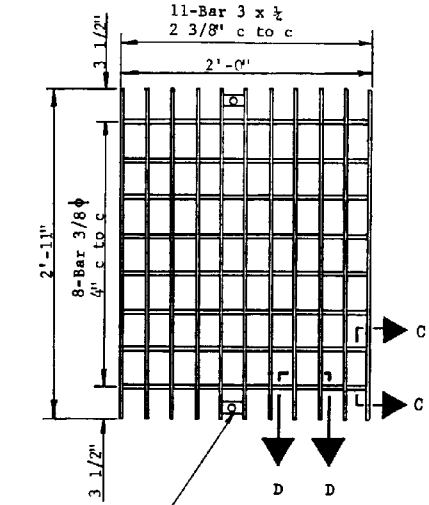

PLAN

GRATE (3-REQ'D)

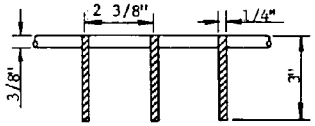

SECT. D-D

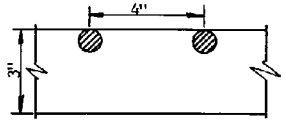

SECT. C-C

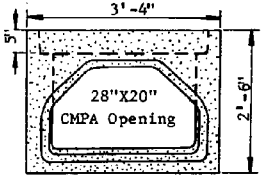

END VIEW

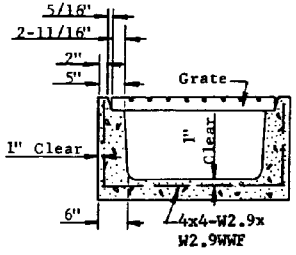

SECTION B-B

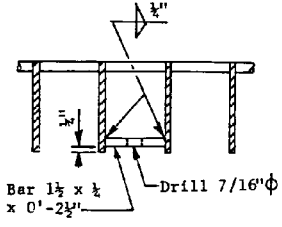

BOLT DOWN CLIP DETAIL

GENERAL NOTES:

1. Concrete shall conform to the requirements for Class S Concrete. The minimum strength shall be 4000 psi.
2. Grout shall be in accordance with Standard Specifications except water content shall be such that the consistancy is proper for smooth trowling.
3. Grate cross rods shall be resistance welded, fillet welded or electro-forged to bearing bars.
4. The completed grate shall be given one shop coat of No. 1 paint.
5. Foundation soil and backfill shall be compacted to not less than 95% of the maximum densty determined in accordance with the requirements of the Materials Testing Manual of the Materials Services.

DESIGN APPROVED	STATE OF ARIZONA DEPARTMENT OF TRANSPORTATION DIVISION OF HIGHWAYS STANDARD DRAWINGS	REV 6/86
APPROVED FOR DISTRIBUTION	CATCH BASIN, MEDIAN DYKE, PRECAST	DRAWING NO C-15.90

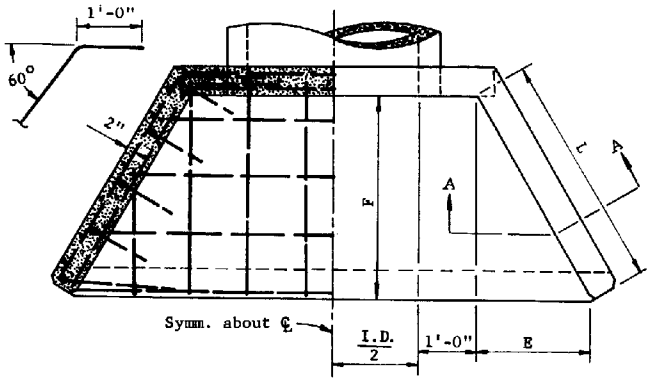

PLAN

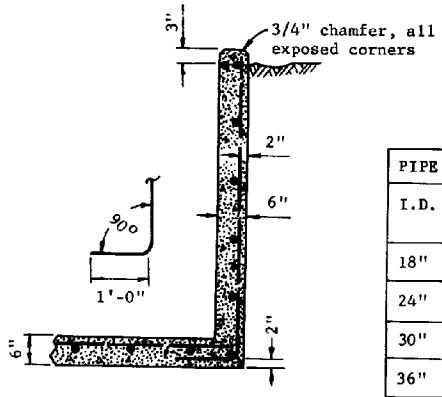

SECTION A-A

PIPE	DIMENSIONS			QUANTITIES		
I.D.	L	E	F (Approx)	C.Y. Conc. C.M.P.	C.Y. Conc. R.C.P.	Reinf.Steel Lbs.
18"	2'-0"	1'-0"	1'-9"	0.97	0.96	65
24"	2'-0"	1'-0"	1'-9"	1.11	1.07	78
30"	3'-0"	1'-6"	2'-7"	1.50	1.44	108
36"	4'-0"	2'-0"	3'-6"	2.08	2.01	150
42"	5'-0"	2'-6"	4'-4"	2.71	2.63	205
48"	6'-0"	3'-0"	5'-2"	3.39	3.30	270
54"	7'-0"	3'-6"	6'-1"	4.14	4.02	335
60"	8'-0"	4'-0"	6'-11"	4.96	4.80	410

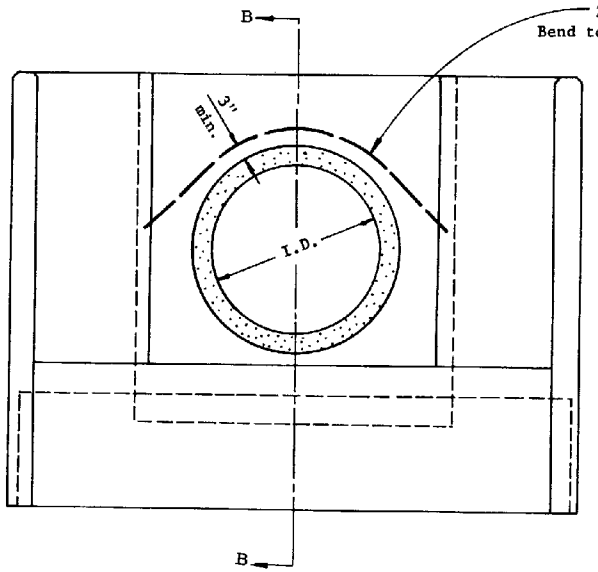

ELEVATION

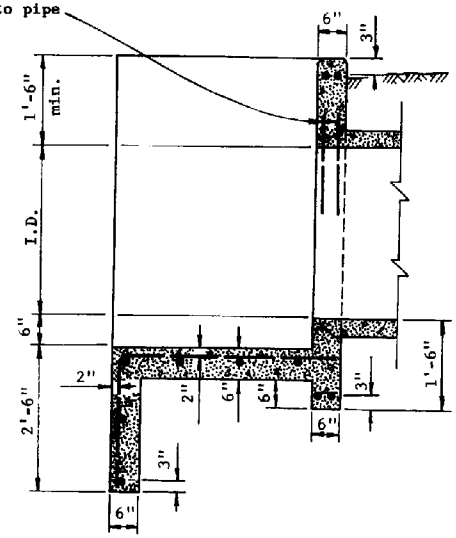

SECTION B-B

GENERAL NOTES

All concrete shall be Class B.

All reinforcing bars shall be #4 except two #6 bars over pipe. Bar spacing approximately 1'-0" c to c unless otherwise noted.

30° wing wall flare shown; 45° normally desirable. See Hydraulics and Utility & R.R. Engr. Divisions.

DESIGN APPROVED	STATE OF ARIZONA DEPARTMENT OF TRANSPORTATION DIVISION OF HIGHWAYS STANDARD DRAWINGS	REV. 1/83
APPROVED FOR DISTRIBUTION	IRRIGATION HEADWALLS 18" TO 60" DIAMETER PIPES	DRAWING NO. C-16.10

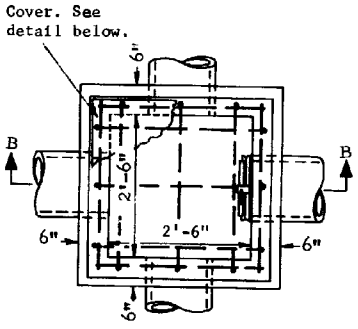

PLAN

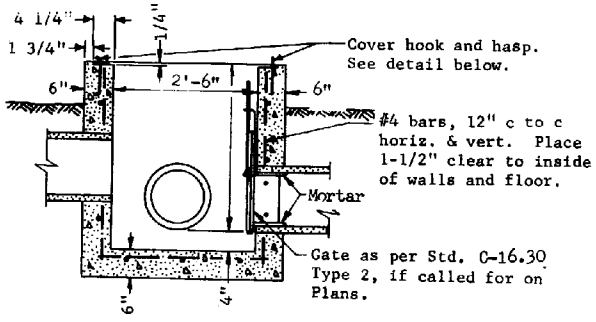

SECTION B-B

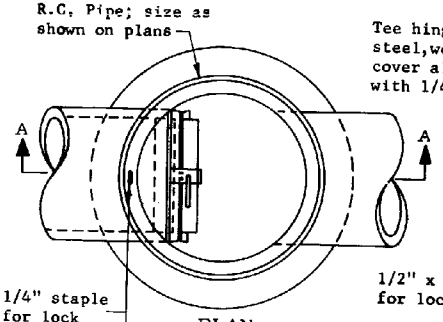

PLAN

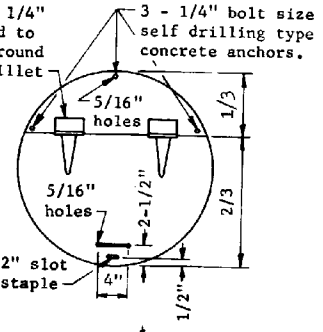

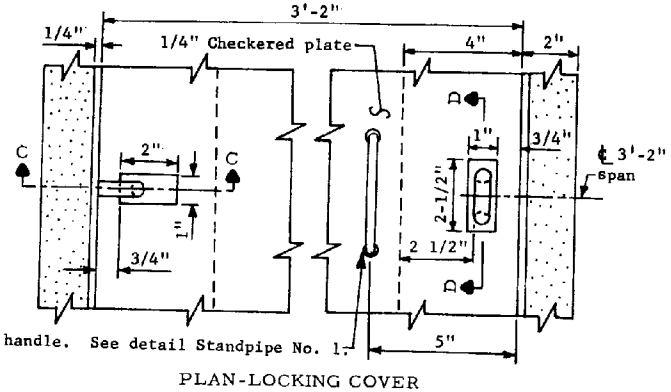

PLAN-LOCKING COVER

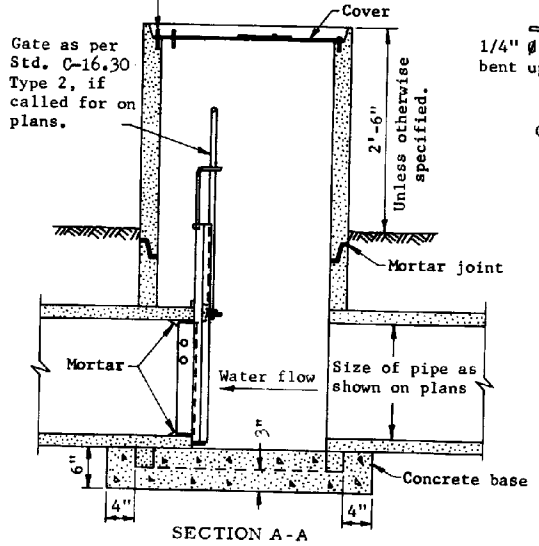

SECTION A-A

IRRIGATION STANDPIPE NO. 1

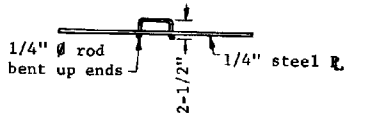

COVER FOR NO. 1 STANDPIPE

GENERAL NOTES

All concrete shall be Class B.

Structural steel shall be in accordance with ASTM A 36.

All cover steel and exposed appurtenances shall be given one shop coat of No. 1 paint.

Plans shall specify locked or bolted cover for Standpipe No. 2

For specific details of a flush pavement or sidewalk installation, see Utility & Railroad Engineering Div.

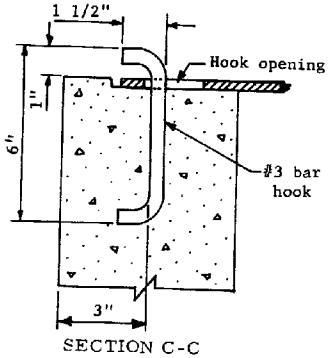

SECTION C-C

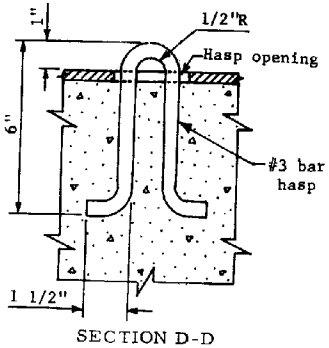

SECTION D-D

IRRIGATION STANDPIPE NO. 2

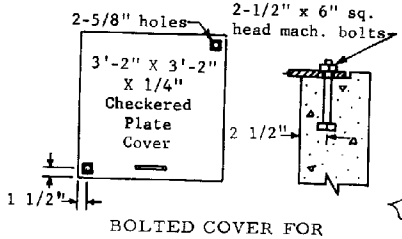

BOLTED COVER FOR STANDPIPE NO. 2

DESIGN APPROVED	STATE OF ARIZONA DEPARTMENT OF TRANSPORTATION DIVISION OF HIGHWAYS STANDARD DRAWINGS	REV. 1/83
APPROVED FOR DISTRIBUTION	IRRIGATION STANDPIPES	DRAWING NO. C-16.20

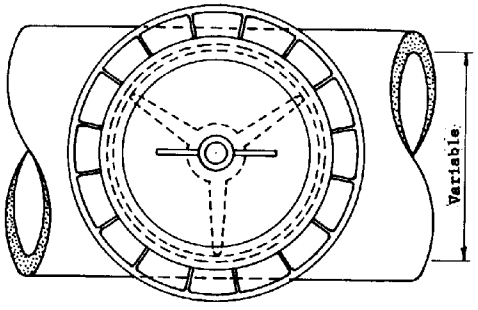

PLAN

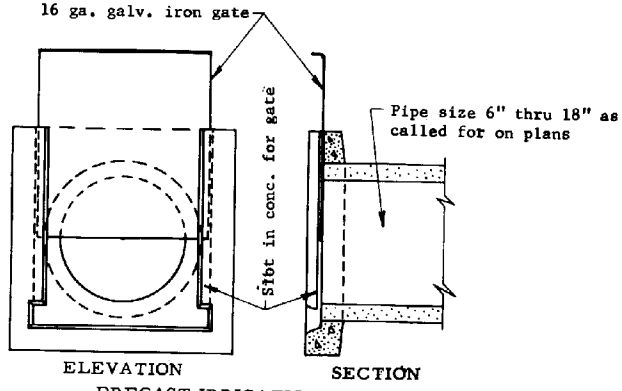

PRECAST IRRIGATION GATE
For open ditch installation
TYPE 1

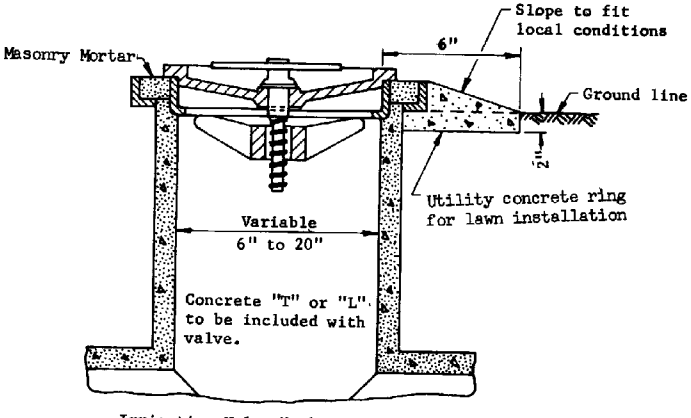

Irrigation Valve Number of valve shall correspond to the size of the pipe in inches. No. 6 to No. 20.

PART SECTION
FLUSH IRRIGATION VALVE

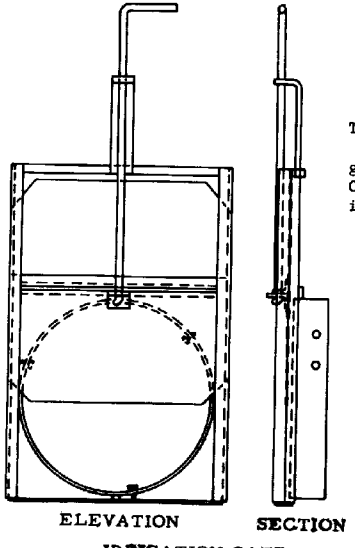

IRRIGATION GATE
For standpipe installation
TYPE 2

TYPE 2

For pipes 6" through 24". Gate and frame shall be galvanized iron. Type shown is for concrete pipe. For C.M.P., external steel adjustable band shall be used in place of internal steel ring.

DESIGN APPROVED	STATE OF ARIZONA DEPARTMENT OF TRANSPORTATION DIVISION OF HIGHWAYS STANDARD DRAWINGS	REV. 1/83
APPROVED FOR DISTRIBUTION	IRRIGATION VALVE & GATE	DRAWING NO. C-16.30

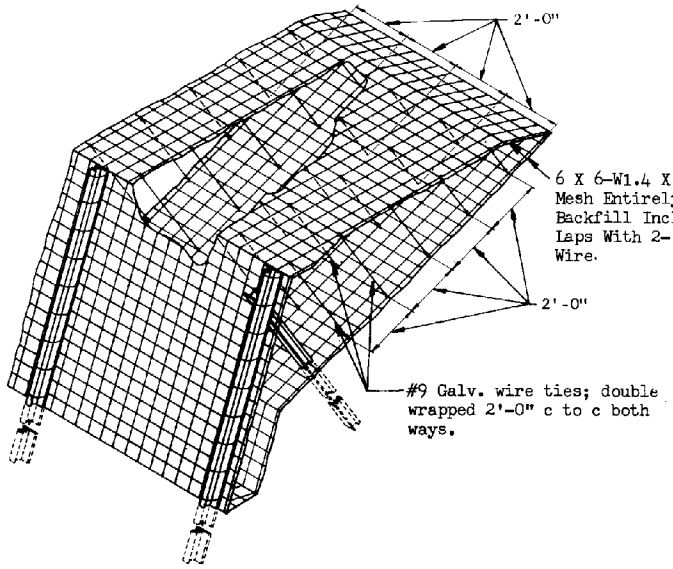

PERSPECTIVE
Drawn For Types 1 & 2. Type 3 Similar

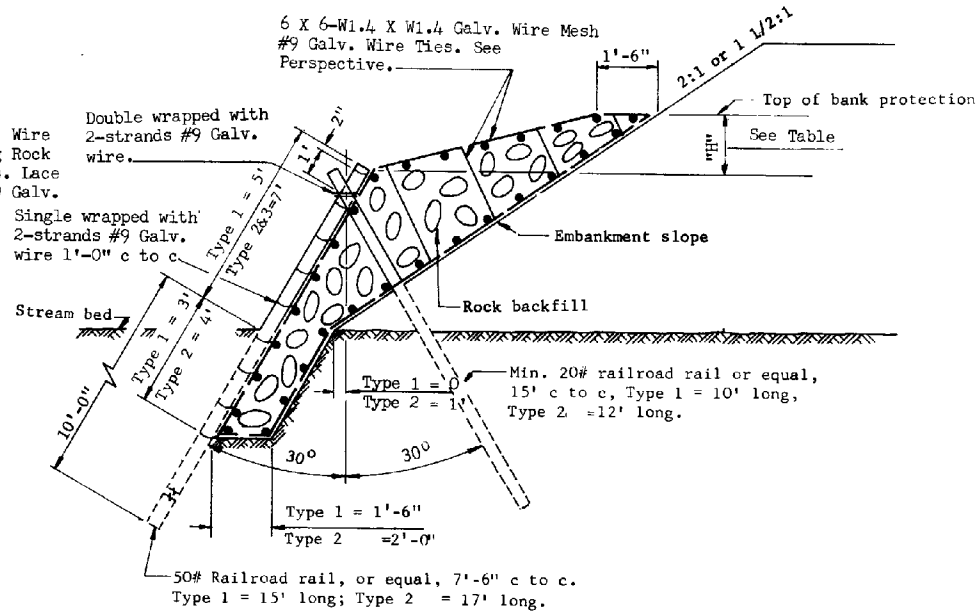

TYPE 1, 2 BANK PROTECTION

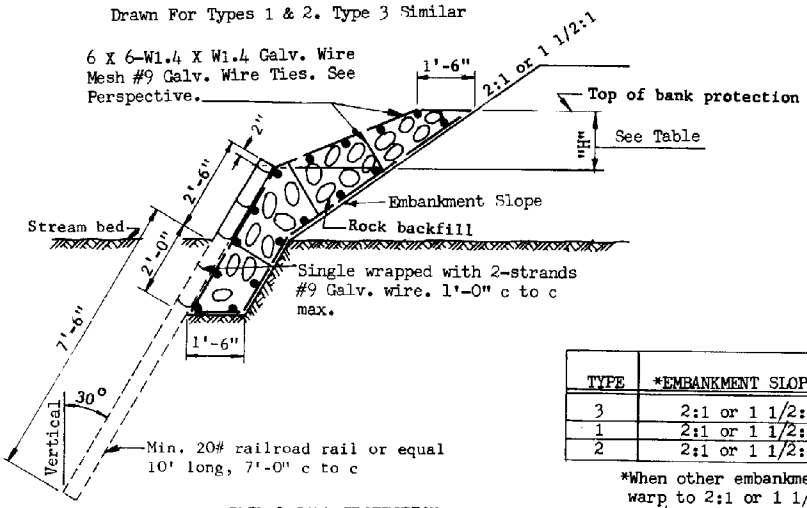

TYPE 3 BANK PROTECTION

TYPE	*EMBANKMENT SLOPE RATE	"H"	TOP OF BANK PROTECTION ABOVE STREAM BED
3	2:1 or 1 1/2:1	0' to 2'	2' to 4'
1	2:1 or 1 1/2:1	0' to 3'	4' to 7'
2	2:1 or 1 1/2:1	0' to 6'	6' to 12'

*When other embankment slope rates are encountered, warp to 2:1 or 1 1/2:1; that is warp 1:1 slope to 1 1/2:1.

GENERAL NOTES

Rock shall be sound and durable, of rounded or angular shape and with a nominal diameter of 8" min. and 12" max. Flat or needle shapes are not acceptable.

Wire mesh splice shall have 6" min. lap vertically and horizontally.

DESIGN APPROVED	STATE OF ARIZONA DEPARTMENT OF TRANSPORTATION DIVISION OF HIGHWAYS STANDARD DRAWINGS	REV. 6/86
APPROVED FOR DISTRIBUTION	BANK PROTECTION, RAIL TYPES 1, 2 & 3	DRAWING NO. C-17.10

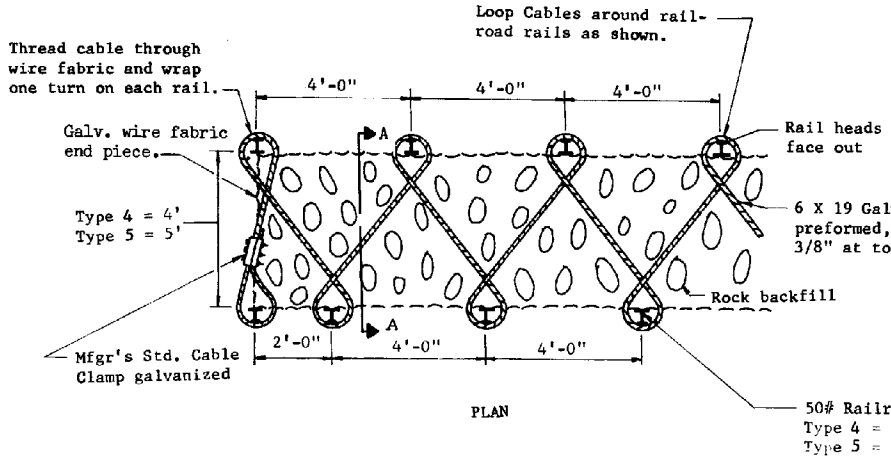

PLAN

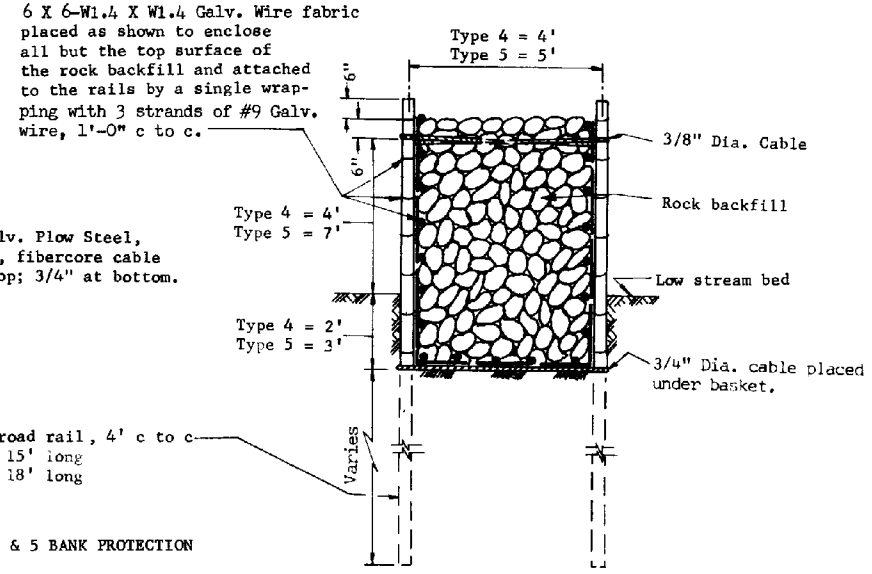

TYPES 4 & 5 BANK PROTECTION

SECTION A-A

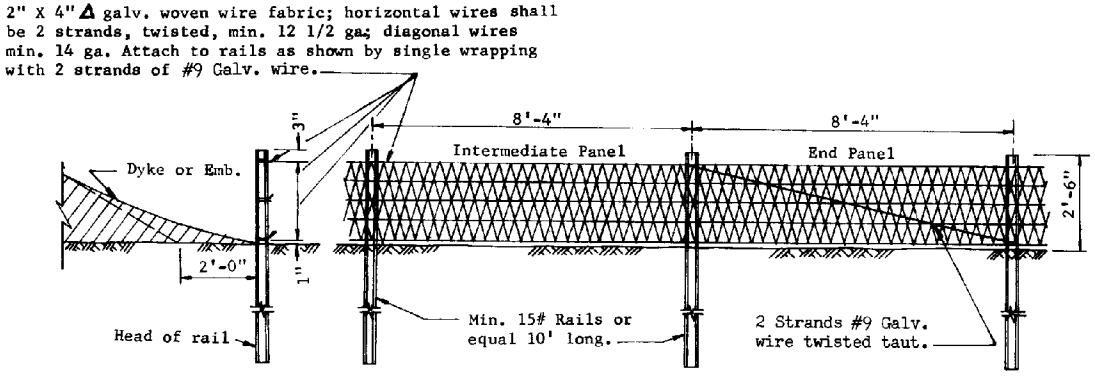

TYPE 6 BANK PROTECTION

GENERAL NOTES

Rock shall be sound and durable, of rounded or angular shape and with a nominal diameter of 8" min. and 21" max. Flat or needle shapes are not acceptable. Rock shall be comprised of 50% min. 8" to 12" and 5% max. 18" to 21".

Wire mesh splice shall have 6" min. lap vertically and horizontally.

DESIGN APPROVED APPROVED FOR DISTRIBUTION	STATE OF ARIZONA DEPARTMENT OF TRANSPORTATION DIVISION OF HIGHWAYS STANDARD DRAWINGS	REV. 6/86
	BANK PROTECTION, RAIL TYPES 4, 5 & 6	DRAWING Nº C-17.20

HALF PLAN

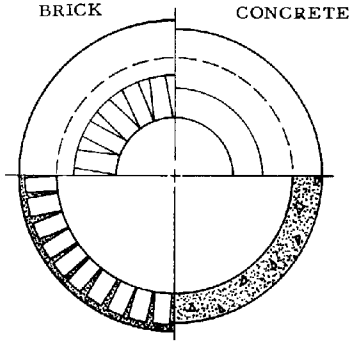

SECTION A-A

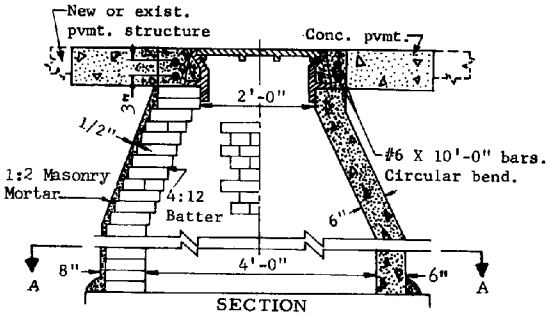

SECTION

BRICK MANHOLE NO. 1

CONCRETE MANHOLE NO. 2

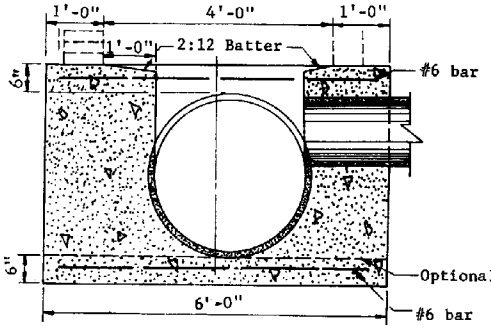

SECTION
STANDARD BASE STRUCTURE
FOR PIPES 6" TO 36" I.D.

HALF PLAN
PIPES 36" I. D. & SMALLER

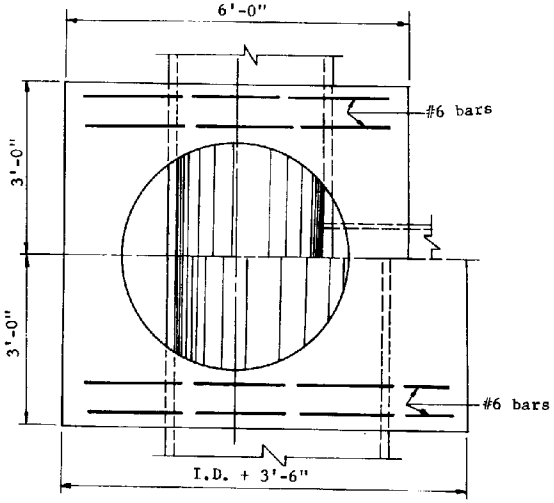

HALF PLAN
PIPES OVER 36" I. D.

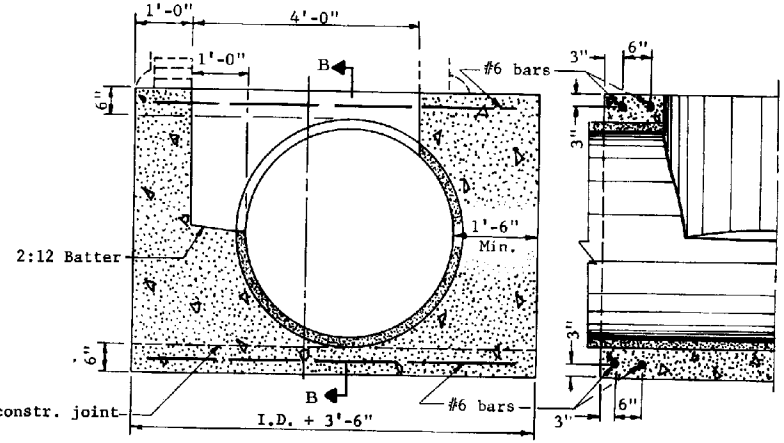

SECTION
STANDARD BASE STRUCTURE
FOR PIPES OVER 36" I. D.

PART SECTION
B-B

GENERAL NOTES

1. Precast Manholes shall conform to the requirements of AASHTO M 199 except that the compressive strength of each unit will be determined and accepted in accordance with Section 1006.7 of the ADOT Specifications.
2. Concrete for all other manholes shall be Class B.
3. Every fifth course of bricks in Manhole No. 1 shall be laid as stretchers.
4. For manhole cut and replacement of bituminous or concrete pavement see Std. C-7.30.
5. For Std. C-18.20 frame and cover type, see Plans.

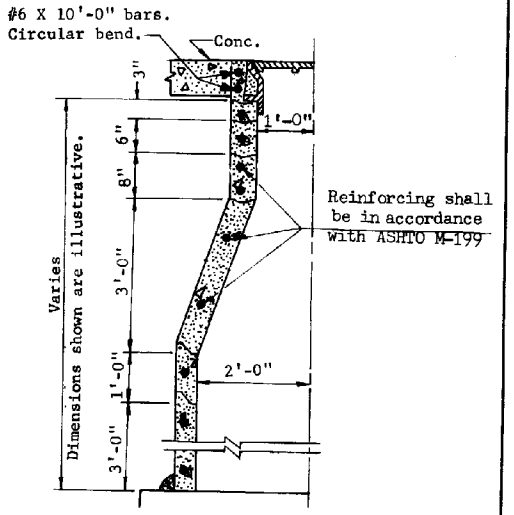

HALF SECTION
MANHOLE NO. 3
PRECAST REINFORCED CONCRETE

DESIGN APPROVED	STATE OF ARIZONA DEPARTMENT OF TRANSPORTATION DIVISION OF HIGHWAYS STANDARD DRAWINGS	REV. 1/83
APPROVED FOR DISTRIBUTION	MANHOLE DETAILS	DRAWING NO. C-18.10

Plan

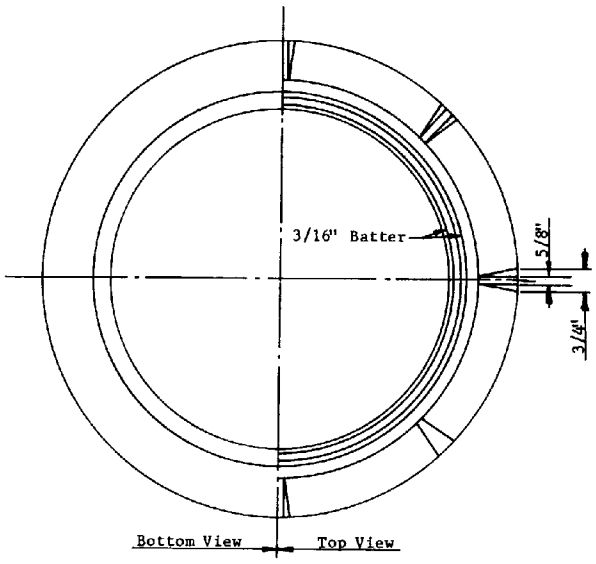

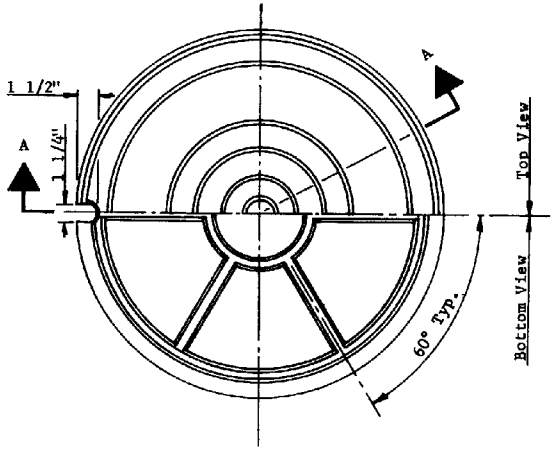

GENERAL NOTES

1. H 20 Loading minimum
2. Detail shown is typical.
3. Alternate design of Manhole frame and cover may be utilized with the approval of the Engineer, as long as mimimum loading and weight are equivalent.

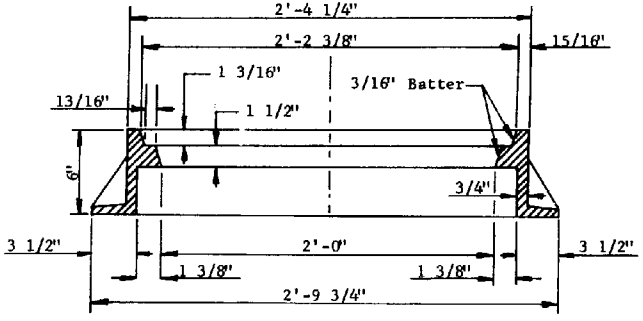

Section

FRAME
APPROX. WT. 200 LBS.

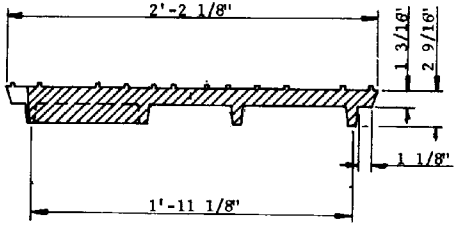

Section A-A

COVER
APPROX. WT. 200 LBS.

DESIGN APPROVED	STATE OF ARIZONA DEPARTMENT OF TRANSPORTATION DIVISION OF HIGHWAYS STANDARD DRAWINGS	REV. 1/83
APPROVED FOR DISTRIBUTION	MANHOLE FRAME & COVER	DRAWING NO. C-18.20

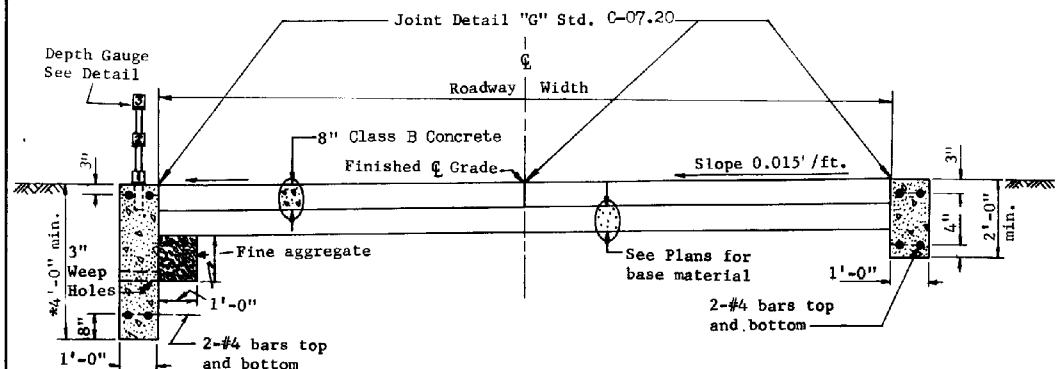

CONCRETE SURFACE FORD
CONCRETE WALLS

*Min. Distance
Below Stream Bed

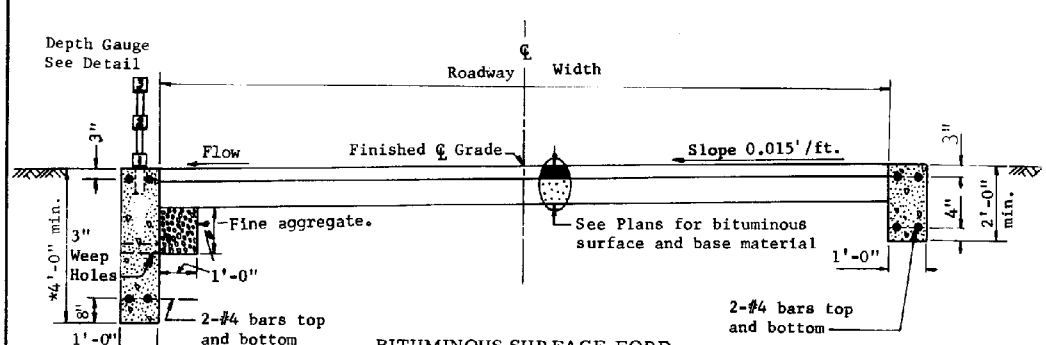

BITUMINOUS SURFACE FORD
CONCRETE WALLS

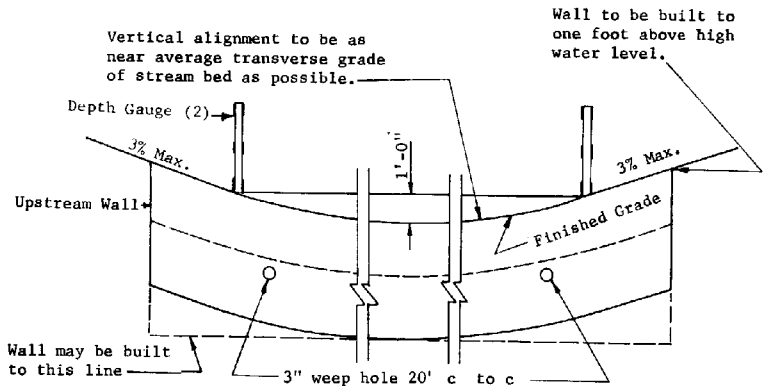

ELEVATION LOOKING UPSTREAM

GENERAL NOTES

Ford walls shall be Class B concrete.

Depth Gauge tubing shall be protected against concrete entering through bottom or perforations.

Depth Gauge tubing and both sides of numeral tabs shall be painted 2- coats white enamel. Numerals and markers shall be 1- coat Gloss black enamel

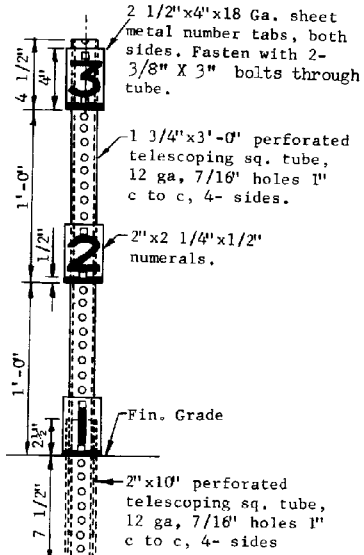

DEPTH GAUGE DETAIL

DESIGN APPROVED	STATE OF ARIZONA DEPARTMENT OF TRANSPORTATION DIVISION OF HIGHWAYS STANDARD DRAWINGS	REV 1/83
APPROVED FOR DISTRIBUTION	FORD - CONCRETE WALLS	DRAWING NO. C-19.10

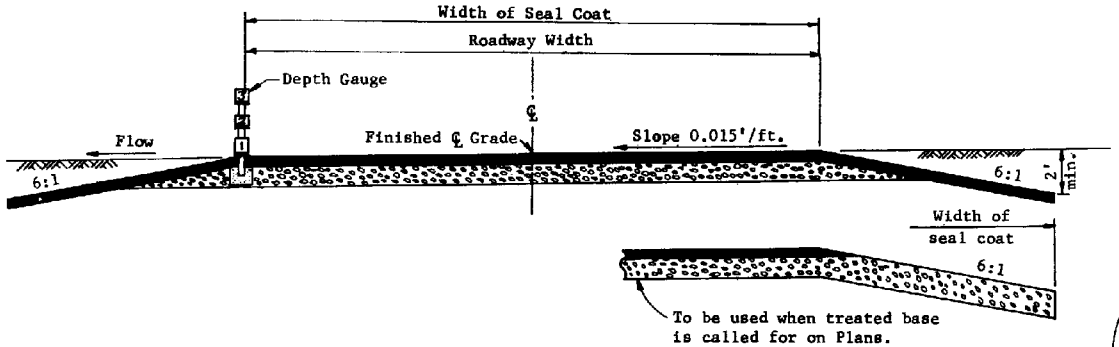

TYPE 1
BITUMINOUS SURFACE FORD

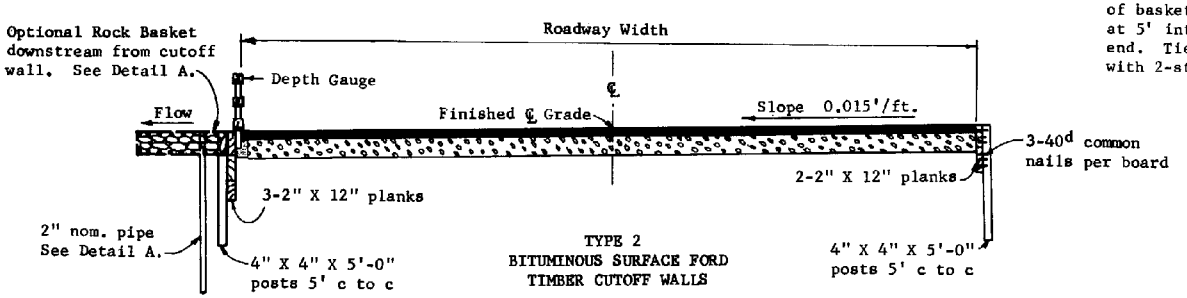

TYPE 2
BITUMINOUS SURFACE FORD
TIMBER CUTOFF WALLS

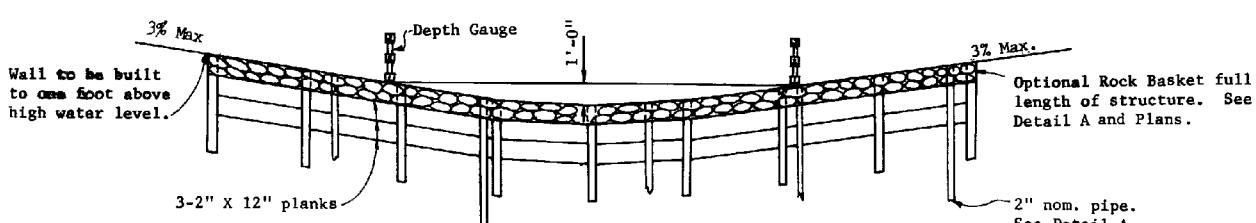

ELEVATION - TYPE 2

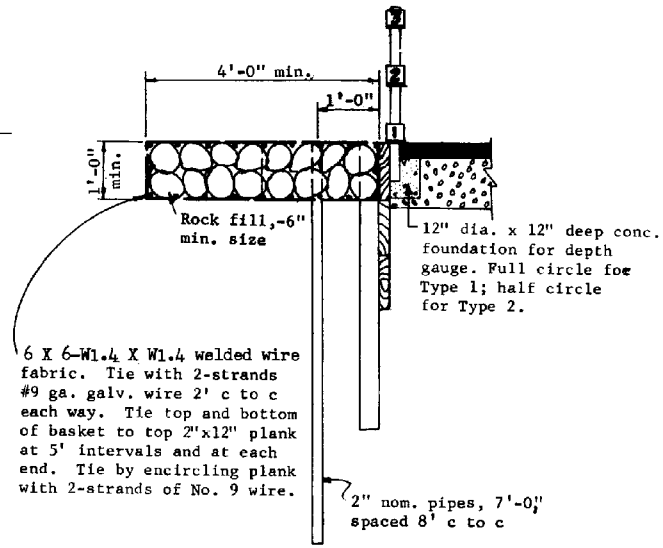

DETAIL A

GENERAL NOTES

All timber shall be rough, pressure treated and unpainted.

Rock basket, full length of structure, shall be included only when called for on Plans.

See Plans for bituminous surface and base material details.

See Std. C-19.10 for Depth Gauge details.

Depth Gauge foundation may be utility concrete.

DESIGN APPROVED	STATE OF ARIZONA DEPARTMENT OF TRANSPORTATION DIVISION OF HIGHWAYS STANDARD DRAWINGS	REV. 1/83
APPROVED FOR DISTRIBUTION	FORDS - TYPES 1 & 2	DRAWING NO. C-19.20

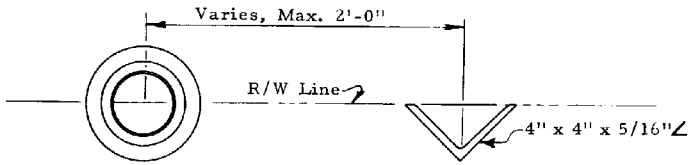

PLAN

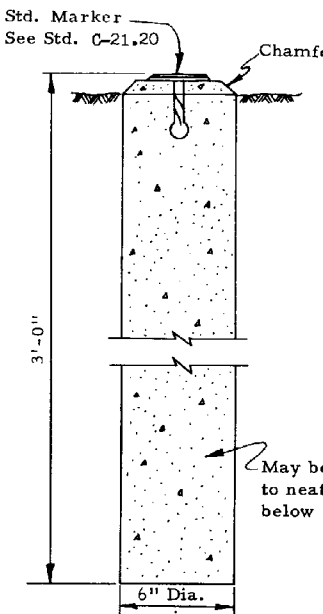

ELEVATION

Survey Monument

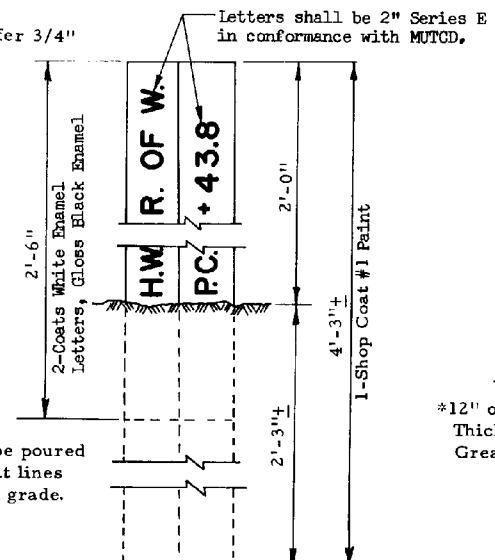

ELEVATION

Reference Marker

RIGHT OF WAY MARKER

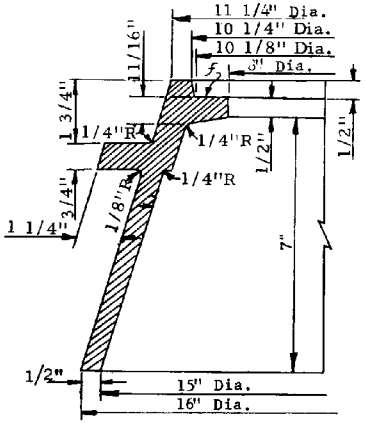

FRAME A

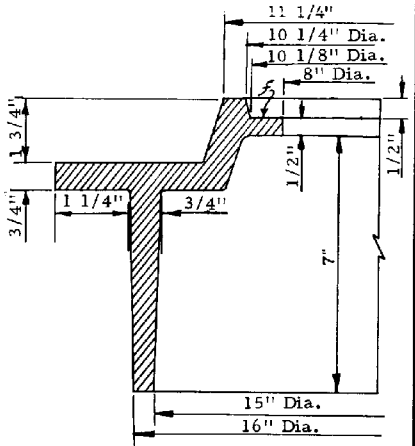

FRAME B

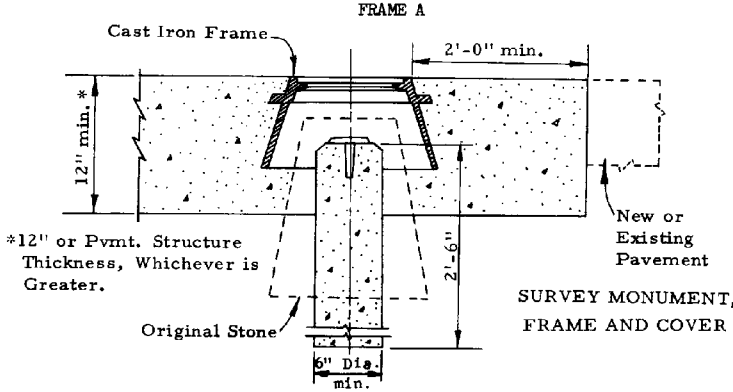

SURVEY MONUMENT, FRAME AND COVER

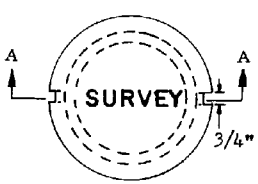

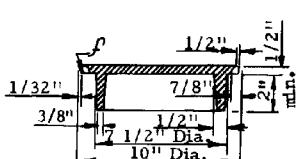

1/8" Fillets Cover Only

COVER SECTION

GENERAL NOTES

A Survey monument, frame and cover, complete in place shall be considered a unit.

A Right-of-way marker, consisting of a survey monument and a reference marker, complete in place shall be considered a unit.

All markers shall be placed as shown on the plans or as directed by the engineer.

Frames may be either Type A or Type B. Frames shall weigh at least 63 pounds.

Covers shall weigh at least 16 pounds.

Portions of frame and cover to be machined is shown by the symbol "$\mathcal{f}$". The allowable tolerances for machined areas shall be $\pm$ 1/64".

Concrete shall conform to the requirements of the specifications.

DESIGN APPROVED	STATE OF ARIZONA DEPARTMENT OF TRANSPORTATION DIVISION OF HIGHWAYS STANDARD DRAWINGS	REV. 1/83
APPROVED FOR DISTRIBUTION	SURVEY MONUMENT, FRAME AND COVER, RIGHT OF WAY MARKER	DRAWING NO. C-21.10

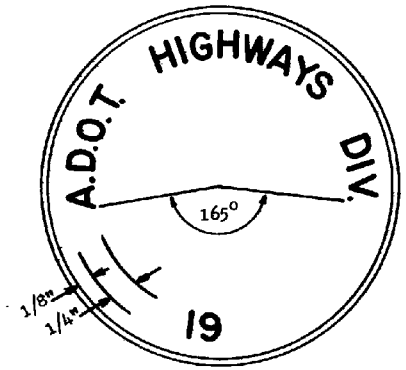

PLAN

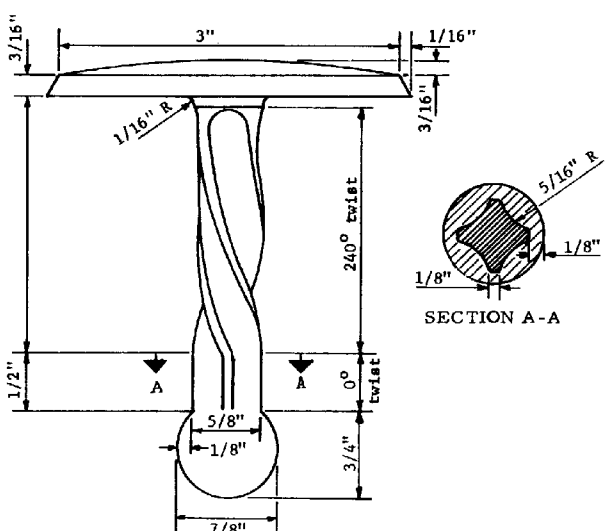

ELEVATION

STANDARD MARKEF

For use as bench, survey monument and R/W markers

GENERAL NOTES

Standard marker shall be made of brass, bronze or aluminum.

Standard marker will be furnished by the Department.

Bench marks will be established by the Engineer on headwalls, bridge curbs or other permanent structures.

Aluminum marker shall not be used when calcium chloride is used in the concrete.

DESIGN APPROVED	STATE OF ARIZONA DEPARTMENT OF TRANSPORTATION DIVISION OF HIGHWAYS STANDARD DRAWINGS	REV. 1/83
APPROVED FOR DISTRIBUTION	STANDARD MARKER	DRAWING NO. C-21.20

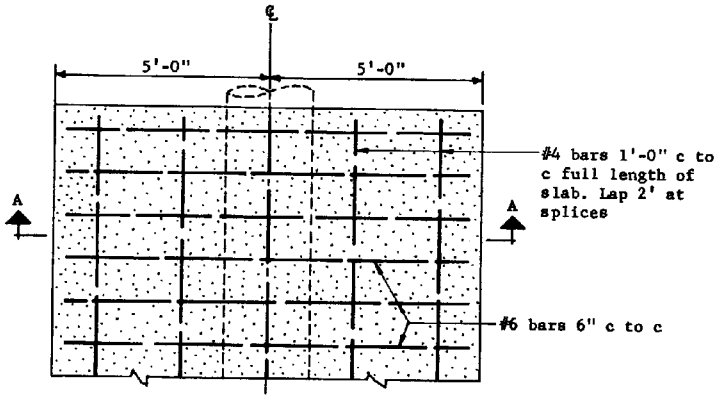

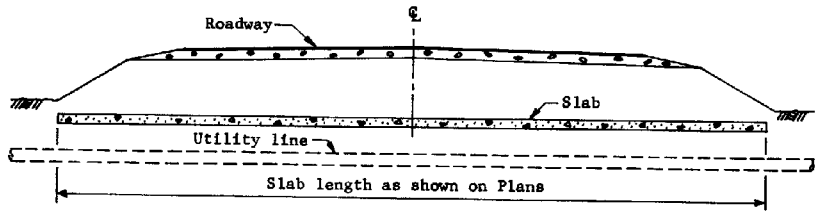

CROSS SECTION

FOR SINGLE INSTALLATION

Quantities per ft. of slab length	
Concrete	Reinforcing Steel
0.31 C.Y.	35.22 lbs.

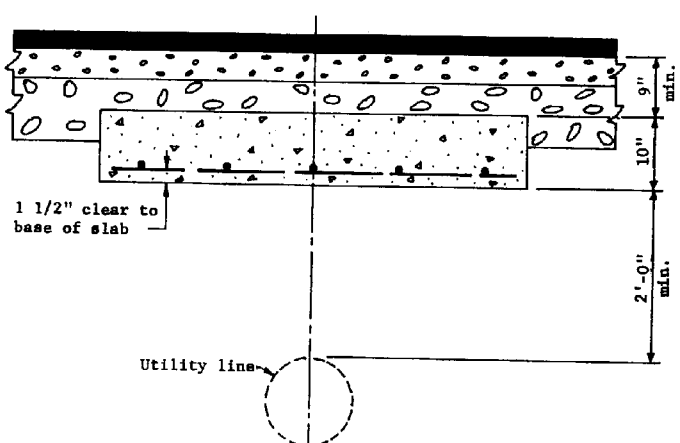

SECTION A-A

GENERAL NOTES
Concrete shall be Class B

DESIGN APPROVED	STATE OF ARIZONA DEPARTMENT OF TRANSPORTATION DIVISION OF HIGHWAYS STANDARD DRAWINGS	REV. 1/83
APPROVED FOR DISTRIBUTION	UTILITY LINE, PROTECTIVE CONCRETE SLAB	DRAWING NO. C-22.10