STATE OF ARIZONA

DEPARTMENT OF TRANSPORTATION

CONSTRUCTION DETAILS

19 74 "C"

DIVISION OF HIGHWAYS

STANDARD DRAWINGS

STANDARD DRAWINGS

PART

I

CONSTRUCTION DETAILS

INDEX – CONSTRUCTION DETAILS

STANDARD NO.	SUBJECT	LAST REVISION DATE	CURRENT REVISION DATE
C-17.01	Bank Protection Types 1, 2, & 3	3/71	6/74
C-17.02	Bank Protection Types 4, 5 & 6	2/73	6/74
C-10.11	Barrier, Fence, Chain Link & Cable		3/71
C-10.08	Barrier, Median, Cast In Place, Slip Form	6/74	2/78
C-10.08.1	Barrier Median, Cast In Place, Fixed Form	6/74	2/78
C-10.08.2	Barrier Median, Precast	6/74	2/78
C-10.09	Barrier Median, C.I.P. Conc. Transition Details		6/74
C-15.06	Catch Basin, Grates, Longitudinal Bars	12/68	6/74
C-15.07	Catch Basin, Grates, Transverse Bars	12/68	6/74
C-15.09	Catch Basin, Median Flush	11/68	10/70
C-15.10.1	Catch Basin, Median Dyke, Precast		8/78
C-15.10	Catch Basin, Median, Dyke	5/72	6/74
C-15.08	Catch Basin, Misc. Details	5/72	6/74
C-15.01	Catch Basin, Type 1	3/71	6/74
C-15.03	Catch Basin, Type 3	3/71	6/74
C-15.04	Catch Basin, Type 4	3/71	6/74
C-15.05	Catch Basin, Type 5	3/71	6/74
C-11.04	Cattle Guard, Drainage		12/68
C-11.03	Cattle Guard, Railroad	6/74	11/74
C-11.01	Cattle Guard, Roadway	6/74	11/74
C-3.02	Channels & Dykes, Typ. Parrallel Installations		
C-5.01	Curb, Gutter, Sidewalk & Driveway Details		6/74
C-3.01	Ditches & Dykes	5/72	6/74
C-4.02	Downdrain, Embankment	5/72	6/74
C-4.04	Downdrain, Embankment, Length Table	3/71	6/74
C-12.05	Fence, Barrier, Wood Posts	5/72	6/74
C-12.03	Fence & Gate, Chain Link	5/72	7/75
C-12.04	Fence & Gate, Indust. Type, Fab. Wire	3/71	5/72
C-12.01	Fence & Gates, Line, Steel Posts	6/74	11/74
C-12.02	Fence, Line, Supplementary Details	6/74	3/78
C-19.01	Fords, Concrete Walls	3/71	6/74
C-19.02	Fords, Types 1 & 2	12/68	6/74
C-6.02	Geometrics, Detour	5/72	6/74
C-8.02	Geometrics, Entrance Ramp	6/74	7/75
C-8.01	Geometrics, Exit Ramp	6/74	7/75
C-5.02	Geometrics, Street Intersection		
C-10.10	Glare Screen, Double Face, Guard Rail	2/73	6/74
C-10.10.2	Glare Screen, Type "O" Conc. Median Barrier		
C-10.10.1	Glare Screen, Type "P" Conc. Median Barrier		
C-10.03	Guard Rail, Approach End Treatment	4/73	6/74
C-10.12	Guard Rail, Breakaway Cable Terminal	12/76	9/78
C-10.13	Guard Rail, Breakaway Cable Terminal, Hardware Details		12/76
C-10.01.2	Guard Rail, Emb. Curb & Pvmt. Widening Details - Plan		
C-10.01.1	Guard Rail, Emb. Curb & Pvmt. Widening Details - Section		
C-10.05	Guard Rail, Flare to Median	4/73	6/74
C-10.02	Guard Rail, Misc. Details	2/73	6/74
C-10.01	Guard Rail, Single Face Details	11/74	5/77

STANDARD NO.	SUBJECT	LAST REVISION DATE	CURRENT REVISION DATE
C-10.04	Guard Rail, Steel Bridge Approach Details	4/73	6/74
C-10.06	Guard Rail, Typical Installations	5/72	6/74
C-14.03	Headwall, Drop Inlet	3/71	6/74
C-14.02	Headwall, 42" - 84" Pipe, Normal to Pipe	9/74	5/78
C-14.02.1	Headwall, 42" - 84" Pipe Skewed		
C-14.01	Headwall, Pipe, Straight & L Types	11/74	8/77
C-16.01	Irrigation Headwalls 18" to 60" Diameter Pipe		
C-16.02	Irrigation Standpipes		6/74
C-16.03	Irrigation Valve & Gate		
C-18.01	Manhole Details	6/74	8/78
C-18.02	Manhole Frame & Cover Details		7/75
C-7.02	Pavement, Concrete, Longitudinal Joints	6/74	11/74
C-7.01	Pavement, Concrete, Transverse Joints	6/74	11/74
C-2.04	Pavement Crown, Parabolic		12/68
C-7.03	Pavement, Cut & Replacement	5/72	6/74
C-13.18	Pipe, Cattle-Vehicle Pass, Miltered End Treatment		
C-13.08	Pipe, Corr, Metal Arch, Fill Heights		1/71
C-13.09	Pipe, Corr. Metal Arch, Fill Heights Design Data		12/68
C-13.05	Pipe, Corr. Metal, End Section	4/70	6/74
C-13.06	Pipe, Corr. Metal, Fill Heights	2/73	4/73
C-13.07	Pipe, Corr. Metal, Fill Height Design Data		12/68
C-13.01	Pipe Culvert Installation	3/71	6/74
C-13.02	Pipe Culvert Placement	2/73	6/74
C-13.03.1	Pipe, Non-Reinforced, Fill Heights		
C-13.10	Pipe & Pipe Arch, Corr. Metal, Conc. Invert Paving	6/74	11/74
C-13.04	Pipe, Reinforced Conc. End Section		
C-13.03	Pipe, Reinforced Conc. Fill Heights		
C-1.01	Plans Symbols-Exist. Topog.	6/74	11/74
C-1.02	Plans Symbols-New Construction		
C-20.01	Railroad Crossing Signs		5/72
C-2.02	Slopes, Class A & B Roadways	8/76	12/76
C-2.03	Slopes, Class C & D Roadways	8/76	12/76
C-2.01	Slopes, Interstate & Class A-A Roadways	8/76	12/76
C-13.14	Special Backfill Measurement Limits	5/72	6/74
C-13.13	Special Backfill Placement Pipes, Culverts & Headwalls	5/72	2/73
C-4.01	Spillway, Embankment	5/72	6/74
C-4.03	Spillway, Embankment, Length Table	3/71	5/72
C-21.02	Standard Marker	9/72	11/74
C-13.11	Struc. Excavation Payment Limits Pipe, Culvert & Headwalls	5/72	6/74
C-13.12	Struc. Excavation Payment Limits, Special Backfill Placement		
C-21.01	Survey Monument, Frame & Cover, Right of Way Marker	5/72	11/74
C-6.01	Turnouts & Driveway Layout	6/74	11/74
C-22.01	Utility Line, Protective Concrete Slab		
C-9.10	Shoulder Grooving	4/78	8/78

FEATURE	Drawing Scale	Pen No.	SYMBOL
State or National Line	All	4	
County Line	All	2	
Township or Range Line	All	2	
Forest or Reservation Line-Shading (Outside)	All	2	
City Limits-Blue Zip No. 113, Shading Inside	All	1	
Section Line	All	1	
Quarter Section Line	All	1	
Section and Quarter Corners	All	00	
Highway R/W Line	All	00	
Right of Way Marker	All	00	
Roadway-Plan	All	00	Width & Type
Roadway-Section	All	00	
Turnout	All	00	Show Width and Type
Roadway ℄	All	0	
Angle Point	All	00	
Mile Post	All	–	
Survey Monument	All	00	
Ground Line-Plans Sheet Profile	All	0	
Ground Line-Details	All	00	
Single or Embankment Curb Showing Depressed Curb	20' & 100'	00	.05"
Curb and Gutter Showing Depressed Curb	20'	00	.05" .10"
Curb and Gutter Showing Depressed Curb	100'	00	.05" .05" .05"
Cattle Guard	All	00	
Guardrail	All	00	
Barbed Wire Fence and Gate	All	00	
Wood Fence	All	00	
Wire Fabricated Fence	All	00	
Trees and Shrubs	All	00	
Well or Pump House	All	00	
Traffic Sign	All	00	
Advertising Sign-Large, Small	All	00	
Railroad Track	100'	00	.05"
Railroad Track	20'	00	.10"
Telephone Booth	All	00	T
Tel. or Tel. Line	All	00	
Power or Joint Line	All	00	
Down Guy and Anchor	All	00	

FEATURE	Drawing Scale	Pen No.	SYMBOL
Buildings	All	00	Floor El. 1903.50'
Bank Protection	All	00	
Bridge	All	00	
Street Light-Ext'n. Arm	All	00	
Water Line	All	00	W 6"
Gas Line	All	00	G 3"
Irrigation Conduit	All	00	IRR 24"
Irrigation Ditch-Concrete	All	00	IRR
Irrigation Ditch-Earth	All	00	IRR
Storm Drain	All	00	SD 24"
Sanitary Sewer	All	00	S 8"
Catch Basin, Gutter-Single Curb, Curb and Gutter	All	00	
Catch Basin, Off Roadway, Flush	All	00	
Catch Basin, Median Dyke or Shoulder Slope	All	00	
Spillway-One Way, Two Way	All	00	
Downdrain-One Way, Two Way	All	00	
Manhole	All	00	
Fire Hydrant	All	00	
Water or Gas Valve	All	00	W or G
Water or Gas Meter Box	All	00	W or G
Pipe Culvert-Wing H'dw'l, End Section	All	00	
Drop Inlet Headwall	All	00	
"L" Headwall	All	00	
"U" Headwall	All	00	
Straight Headwall	All	00	
Concrete Box Culvert	All	00	
Rock Riprap	All	00	
Dyke	All	00	
Major Wash or Natural Channel	All	00	Name
Minor Wash	All	00	
Retaining Wall	All	00	

DESIGN APPROVED

APPROVED FOR DISTRIBUTION

STATE OF ARIZONA
DEPARTMENT OF TRANSPORTATION
DIVISION OF HIGHWAYS
STANDARD DRAWINGS

REV. 6/74 11/74

PLANS SYMBOLS-EXIST. TOPOG.

DRAWING NO. C-1.01

FEATURE	DRAWING SCALE	PEN NO.	SYMBOL
New R/W Line	All	1	
R/W Marker	All	1	
Access Control at R/W } Chart Pak 256 TAA 1/8" wide	All	1	
Access Control Not at R/W } Shading Inside	All	1	
Pavement and Sidewalk Edge	All	1	
Bituminous Pavement- Plan. Blue Zip No. 309	All	-	
Concrete Pavement- Plan. Blue Zip No. 340	All	-	
Gravel Surface- Plan. Blue Zip No. 18	All	-	
Graded Surface- Plan. Blue Zip No. 310	All	-	
Obliterate Pavement- Plan. Blue Zip No. 438	All	-	
Bituminous Pavement- Section	All	-	
Aggregate Base- Section	All	1	
Select Material- Section	All	1	
Subgrade Seal- Section	All	1	
Concrete Pavement- Section	All	1	
Constr. ℄, Sta. Marks	All	3-0	
Angle Point	All	1	
PC, PT, POT, PVC, etc.	All	1	
Mile Post	All	-	
Survey Monument	All	1	
Ground Line- Details	All	1	
Single or Emb. Curb Showing Depressed Curb	100' & 20'	1	20' D.C. .05"
Curb and Gutter Showing Depressed Curb	100'	1	.05" .05"
Curb and Gutter Showing Depressed Curb	20'	1	.10" .05"
Cattle Guard	All	1	
Guardrail	All	1	
Barbed Wire Fence and Gate	All	1	
Wood Fence	All	1	
Wire Fabric Fence	All	1	
Traffic Sign	All	1	
Tel. or Tel. Line- Relocated	All	1	
Power or Joint Line- Relocated	All	1	
Down Guy and Anchor	All	1	
Street Light- Extension Arm	All	1	
Pipe Culv., Irrig. Conduit, Storm Drain- Wing H'dw'l., End Sect.	100'	3	
Pipe Culv., Irrig. Conduit, Storm Drain- Wing H'dw'l., End Sect.	20'	1	
Channel and Ditch	All	1	
Bank Protection	All	1	
Retaining Wall	All	1	

7/20" 1/4"

FHWA REGION	STATE	PROJECT NO.	SHEET NO.	TOTAL SHEETS	AS BUILT
3/4"	1/2"	1 1/2"	1/2"	3/5"	1 3/20" 1/4"

7/20"

FEATURE	DRAWING SCALE	PEN NO.	SYMBOL
Catch Basin, Rdwy.- Single Curb, Curb and Gutter	All	1	
Catch Basin, Off Rdwy., Flush	All	1	
Catch Basin, Med. Dyke or Shoulder Slope	All	1	
Spillway, 1 Way, 2 Way	All	1	
Downdrain, 1 Way, 2 Way	All	1	
Manhole	All	1	
Manhole to be Reconstructed	All	1	
Fire Hydrant	All	1	
Drop Inlet Headwall	All	1	
"L" Headwall	100' & 20'	1	
"U" Headwall	100' & 20'	1	
Straight Headwall	100' & 20'	1	
Concrete Box Culvert	All	1	
Rock Riprap	All	1	
Dyke	All	1	
Turnout	All	1	W R
1" 1" 1" 2/3" 1/3" 7/40"	Large Drawings	1	
3/5" 3/5" 3/5" 2/5" 1/5" 1/8"	Small Drawings	1	

DESIGN APPROVED

APPROVED FOR DISTRIBUTION

STATE OF ARIZONA
DEPARTMENT OF TRANSPORTATION
DIVISION OF HIGHWAYS
STANDARD DRAWINGS

Plans Symbols
New Construction

REV.

DRAWING NO. C-1.02

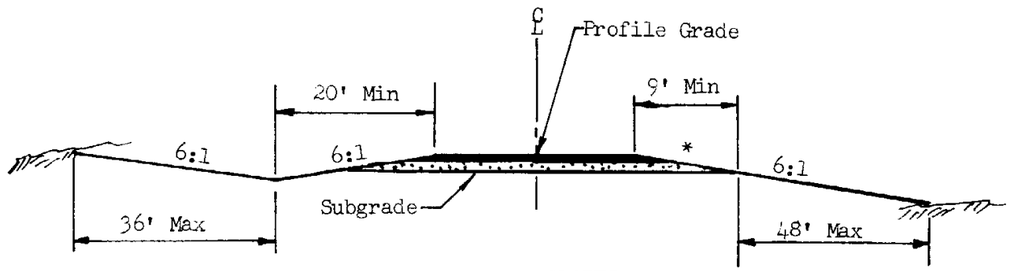

MINIMUM SLOPES

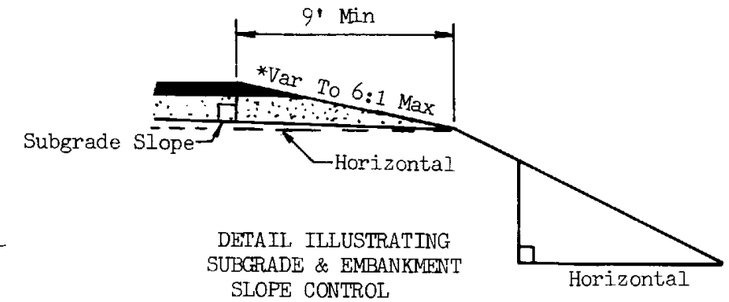

DETAIL ILLUSTRATING SUBGRADE & EMBANKMENT SLOPE CONTROL

GENERAL NOTES

1. Roadway width, cut ditch, superelevation, and type and thickness of roadway surfacing will be shown on project plans.
2. For cuts up to 6' use 5' semi-tangents for slope rounding. For each additional foot of cut add 1' to semi-tangent to 11' maximum.
3. Wetted perimeter should not extend above subgrade in unpaved ditch.
4. Pavement structure slopes are relative to subgrade slope. Slopes beyond the pavement structure, such as embankment and cut slopes, are relative to horizontal.
5. The desirable maximum embankment slope rate should be 4:1 within interchange and grade seperation areas.
6. When median slopes intersect, see project plans.

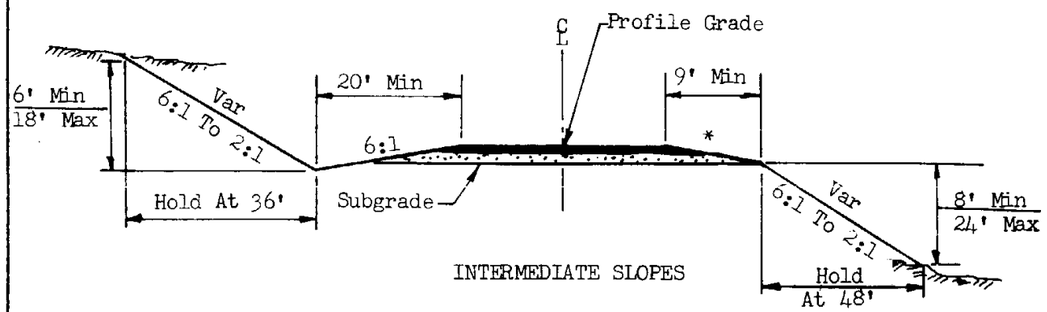

INTERMEDIATE SLOPES

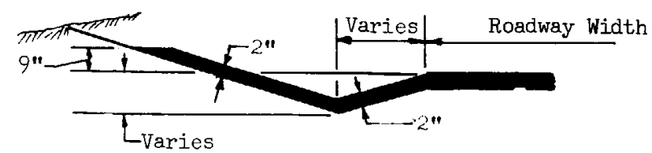

PAVED GUTTER IN CUTS

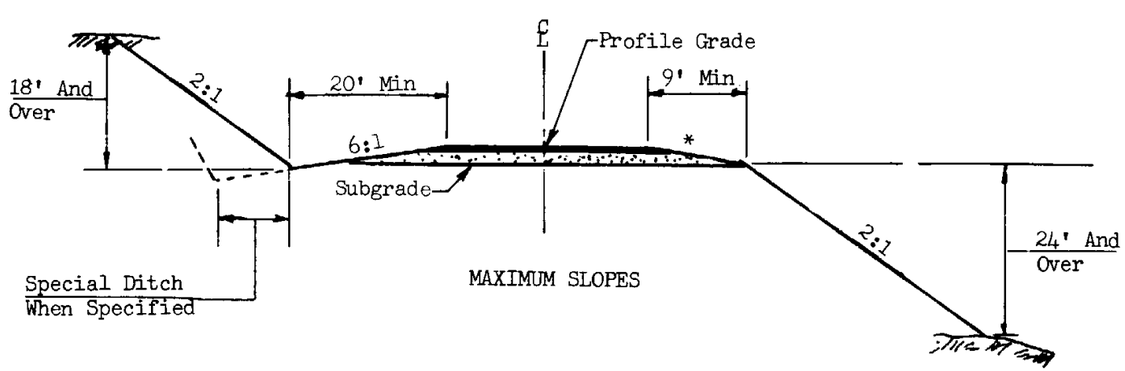

MAXIMUM SLOPES

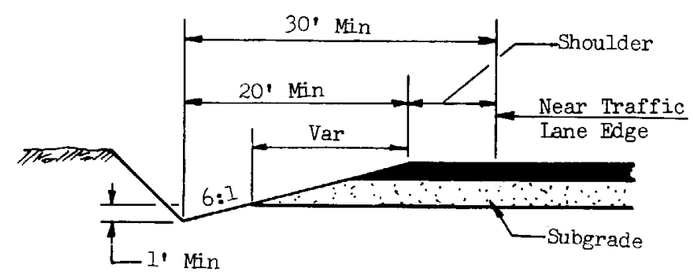

MINIMUM DITCH CONDITIONS

TYPICAL SECTIONS

DESIGN APPROVED	STATE OF ARIZONA DEPARTMENT OF TRANSPORTATION DIVISION OF HIGHWAYS STANDARD DRAWINGS	REV. 8/76 12/76
APPROVED FOR DISTRIBUTION	SLOPES, INTERSTATE & CLASS A-A ROADWAYS	DRAWING NO. C-2.01

GENERAL NOTES

1. Roadway width, cut ditch, superelevation, and type and thickness of roadway surfacing will be shown on project plans.
2. For cuts up to 6' use 5' semi-tangents for slope rounding. For each additional foot of cut add 1' to semi-tangent to 11' maximum.
3. Wetted perimeter should not extend above subgrade in unpaved ditch.
4. Pavement structure slopes are relative to subgrade slope. Slopes beyond the pavement structure, such as embankment and cut slopes, are relative to horizontal.

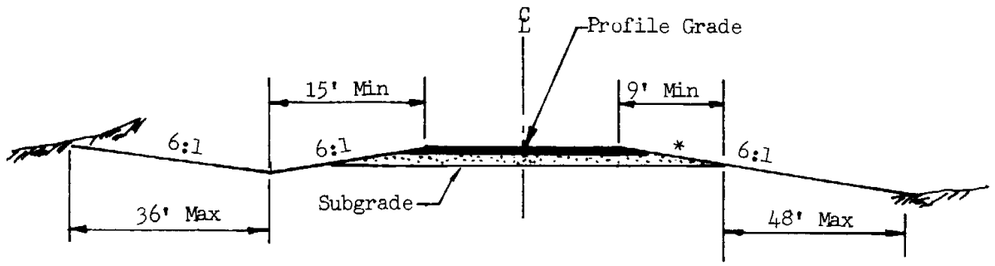

MINIMUM SLOPES

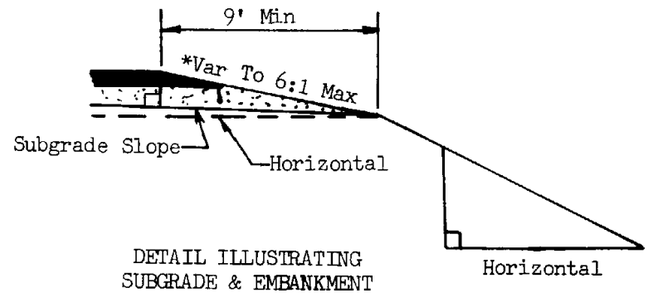

DETAIL ILLUSTRATING SUBGRADE & EMBANKMENT SLOPE CONTROL

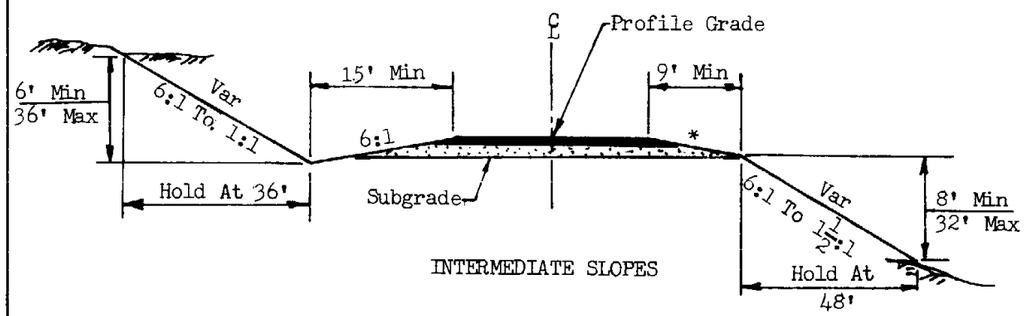

INTERMEDIATE SLOPES

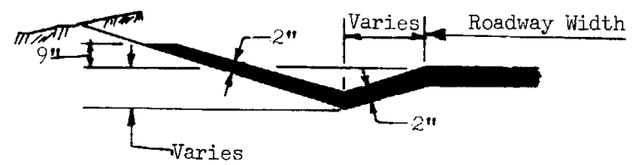

PAVED GUTTER IN CUTS

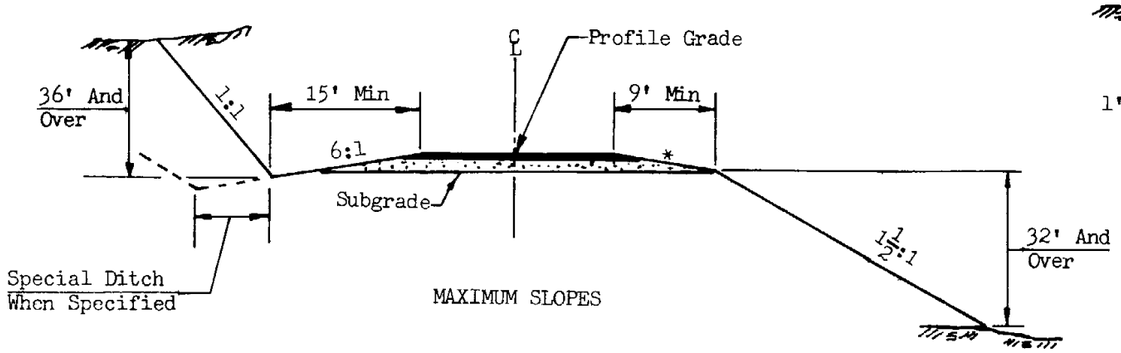

MAXIMUM SLOPES

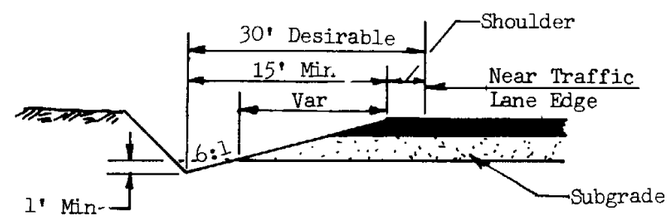

MINIMUM DITCH CONDITIONS

TYPICAL SECTIONS

DESIGN APPROVED	STATE OF ARIZONA DEPARTMENT OF TRANSPORTATION DIVISION OF HIGHWAYS STANDARD DRAWINGS	REV 8/76 12/76
APPROVED FOR DISTRIBUTION	SLOPES CLASS A & B ROADWAYS	DRAWING NO. C-2.02

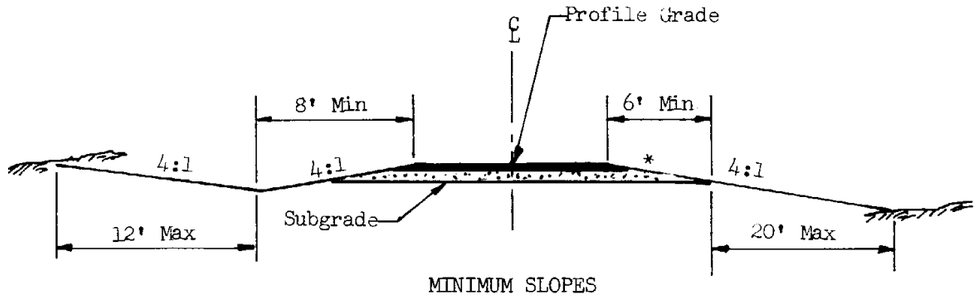

MINIMUM SLOPES

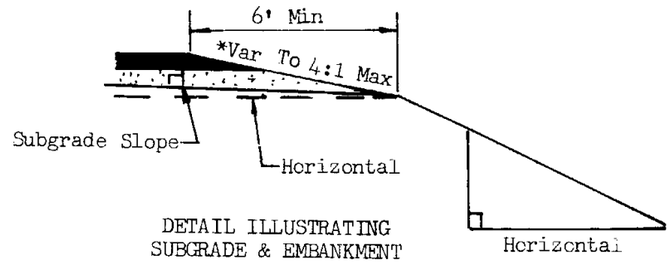

DETAIL ILLUSTRATING SUBGRADE & EMBANKMENT SLOPE CONTROL

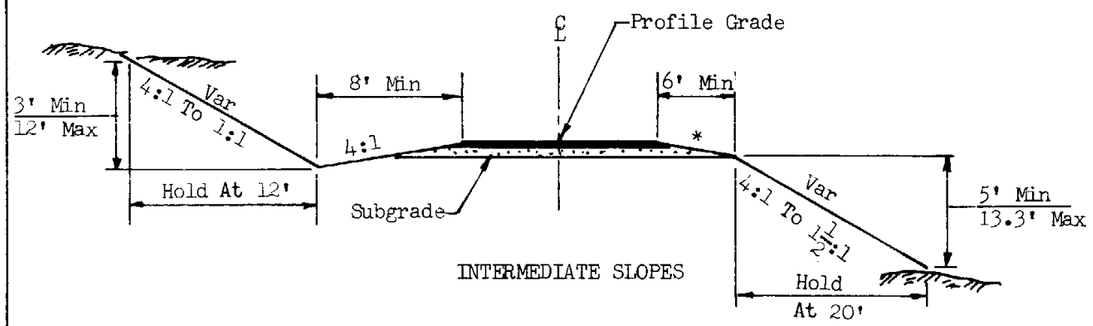

INTERMEDIATE SLOPES

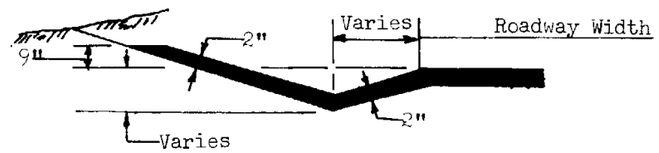

PAVED GUTTER IN CUTS

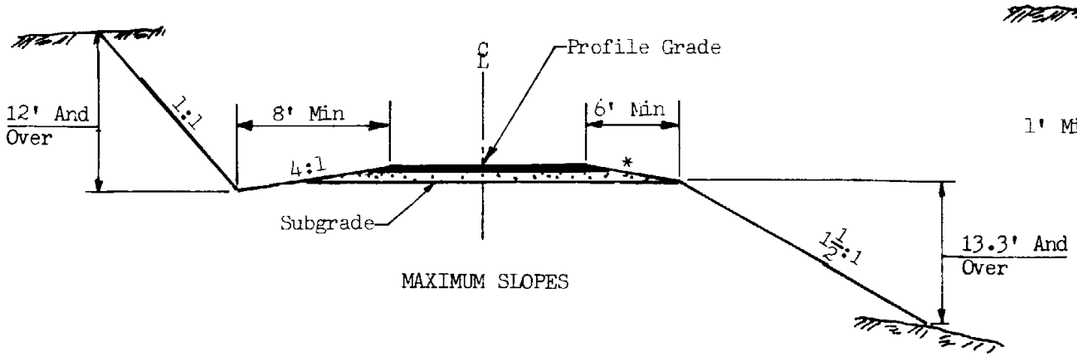

MAXIMUM SLOPES

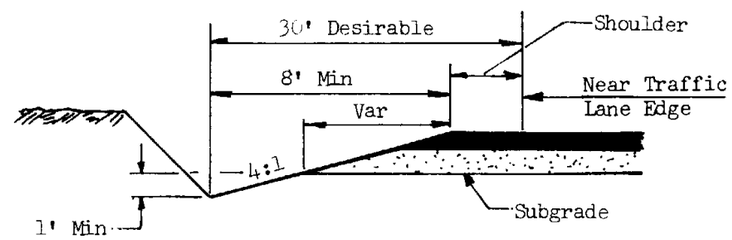

MINIMUM DITCH CONDITIONS

GENERAL NOTES

1. Roadway width, cut ditch, superelevation, and type and thickness of roadway surfacing will be shown on project plans.
2. For cuts up to 6' use 5' semi-tangents for slope rounding. For each additional foot of cut add 1' to semi-tangent to 11' maximum.
3. Wetted perimeter should not extend above subgrade in unpaved ditch.
4. Pavement structure slopes are relative to subgrade slope. Slopes beyond the pavement structure, such as embankment and cut slopes, are relative to horizontal.

TYPICAL SECTIONS

DESIGN APPROVED	STATE OF ARIZONA DEPARTMENT OF TRANSPORTATION DIVISION OF HIGHWAYS STANDARD DRAWINGS	REV. 8/76 12/76
APPROVED FOR DISTRIBUTION	SLOPES CLASS C & D ROADWAYS	DRAWING NO. C-2.03

CUMULATIVE PERCENT OF CROWN "C" FOR EACH FOOT RIGHT OR LEFT OF ℄

W = FULL WIDTH OF ROADWAY - FEET

X →	2'	4'	6'	8'	10'	12'	14'	16'	18'	20'	22'	24'	26'	28'	30'	32'	34'	36'	38'	40'	42'	44'
90	0.20	0.79	1.78	3.16	4.94	7.11	9.68	12.64	16.00	19.75	23.90	28.44	33.38	38.72	44.44	50.57	57.09	64.00	71.31	79.01	87.11	95.61
88	0.21	0.83	1.86	3.31	5.17	7.44	10.12	13.22	16.74	20.66	25.00	29.75	34.92	40.50	46.49	52.89	59.71	66.94	74.59	82.64	91.12	C
86	0.22	0.87	1.95	3.46	5.41	7.79	10.60	13.85	17.52	21.63	26.18	31.15	36.56	42.40	48.67	55.38	62.52	70.09	78.10	86.53	95.40	
84	0.23	0.91	2.04	3.63	5.67	8.16	11.11	14.51	18.37	22.68	27.44	32.65	38.32	44.44	51.02	58.05	65.53	73.47	81.86	90.70	C	
82	0.24	0.95	2.14	3.81	5.95	8.57	11.66	15.23	19.27	23.80	28.79	34.27	40.21	46.64	53.54	60.92	68.77	77.10	85.90	95.18		
80	0.25	1.00	2.25	4.00	6.25	9.00	12.25	16.00	20.25	25.00	30.25	36.00	42.25	49.00	56.25	64.00	72.25	81.00	90.25	C		
78	0.26	1.05	2.37	4.20	6.57	9.47	12.89	16.83	21.30	26.30	31.82	37.87	44.44	51.54	59.17	67.32	76.00	85.21	94.94			
76	0.28	1.11	2.49	4.43	6.93	9.97	13.57	17.73	22.44	27.70	33.52	39.89	46.81	54.29	62.33	70.91	80.06	89.75	C			
74	0.29	1.17	2.63	4.67	7.30	10.52	14.32	18.70	23.67	29.22	35.35	42.07	49.38	57.27	65.74	74.80	84.44	94.67				
72	0.31	1.23	2.78	4.94	7.72	11.11	15.12	19.75	25.00	30.86	37.35	44.44	52.16	60.49	69.44	79.01	89.20	C				
70	0.33	1.31	2.94	5.22	8.16	11.76	16.00	20.90	26.45	32.65	39.51	47.02	55.18	64.00	73.47	83.59	94.37					
68	0.35	1.38	3.11	5.54	8.65	12.46	16.95	22.15	28.03	34.60	41.87	49.83	58.48	67.82	77.85	88.58	C					
66	0.37	1.47	3.30	5.87	9.18	13.21	17.99	23.49	29.73	36.71	44.41	52.86	62.03	71.94	82.59	93.97						
64	0.39	1.56	3.52	6.25	9.77	14.06	19.14	25.00	31.64	39.06	47.27	56.25	66.02	76.56	87.89	C						
62	0.42	1.66	3.75	6.66	10.41	14.98	20.40	26.64	33.71	41.62	50.36	59.94	70.34	81.58	93.65							
60	0.44	1.78	4.00	7.11	11.11	16.00	21.78	28.44	36.00	44.44	53.78	64.00	75.11	87.11	C							
58	0.48	1.90	4.28	7.61	11.89	17.12	23.31	30.44	38.52	47.56	57.55	68.49	80.38	93.22								
56	0.51	2.04	4.59	8.16	12.76	18.37	25.00	32.65	41.33	51.02	61.73	73.47	86.22	C								
54	0.55	2.19	4.94	8.78	13.72	19.75	26.89	35.12	44.44	54.87	66.39	79.01	92.73									
52	0.59	2.37	5.33	9.47	14.79	21.30	28.99	37.87	47.93	59.17	71.60	85.21	C									
50	0.64	2.56	5.76	10.24	16.00	23.04	31.36	40.96	51.84	64.00	77.44	92.16										
48	0.69	2.78	6.25	11.11	17.36	25.00	34.03	44.44	56.25	69.44	84.03	C										
46	0.76	3.02	6.81	12.10	18.90	27.22	37.05	48.39	61.25	75.61	91.49											
44	0.83	3.31	7.44	13.22	20.66	29.75	40.50	52.89	66.94	82.64	C											
42	0.91	3.63	8.16	14.51	22.68	32.65	44.44	58.05	73.47	90.70												
40	1.00	4.00	9.00	16.00	25.00	36.00	49.00	64.00	81.00	C												
38	1.11	4.43	9.97	17.73	27.70	39.89	54.29	70.91	89.75													
36	1.23	4.94	11.11	19.75	30.86	44.44	60.49	79.01	C													
34	1.38	5.50	12.46	22.15	34.60	49.83	67.82	88.58														
32	1.56	6.25	14.06	25.00	39.06	56.25	76.56	C														
30	1.78	7.11	16.00	28.44	44.44	64.00	87.11															
28	2.04	8.16	18.37	32.65	51.02	73.47	C															
26	2.37	9.47	21.30	37.87	59.17	85.21																
24	2.78	11.11	25.00	44.44	69.44	C																
22	3.31	13.22	29.75	52.89	82.64																	
20	4.00	16.00	36.00	64.00	C																	
18	4.94	19.75	44.44	79.01																		
16	6.25	25.00	56.25	C																		
14	8.16	32.69	73.47																			
12	11.11	44.44	C																			

FORMULA

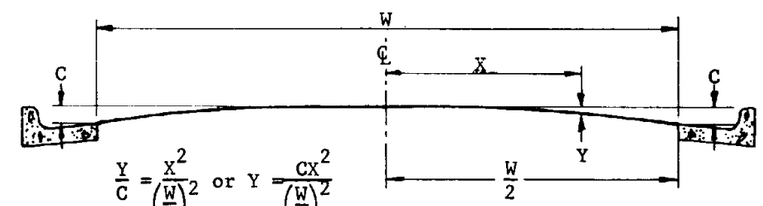

$$\frac{Y}{C} = \frac{X^2}{\left(\frac{W}{2}\right)^2} \text{ or } Y = \frac{CX^2}{\left(\frac{W}{2}\right)^2}$$

USE OF TABLE

Example:

Assume W = 40 ft. and C = 0.45 ft.
Find Y for X = 8 ft.

Table shows Y = 16.00% of C,
or 0.16 X 0.45' = 0.072 ft.

DESIGN APPROVED	STATE OF ARIZONA DEPARTMENT OF TRANSPORTATION DIVISION OF HIGHWAYS STANDARD DRAWINGS	REV 12/68
APPROVED FOR DISTRIBUTION	PAVEMENT CROWN, PARABOLIC	DRAWING NO. C-2.04

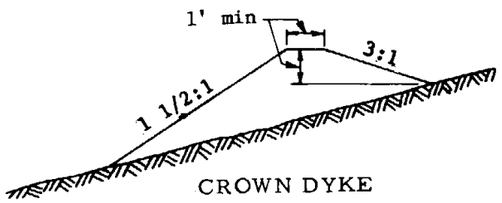

CROWN DYKE

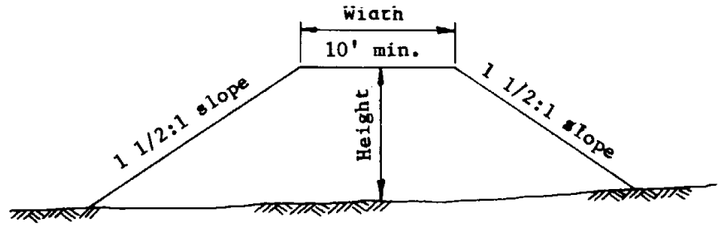

TYPE A DYKE

GENERAL NOTES

Dimensions of ditches and dykes, as shown on Plans, are top width, height and length.

Ditches shall be constructed with a minimum grade to prevent erosion. Ditch outlet treatment shall be as provided on plans.

See Std. C-3.02 for parallel channel and dyke treatment with respect to recovery area.

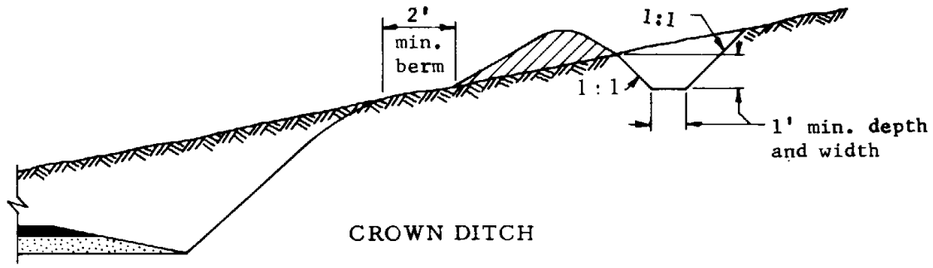

CROWN DITCH

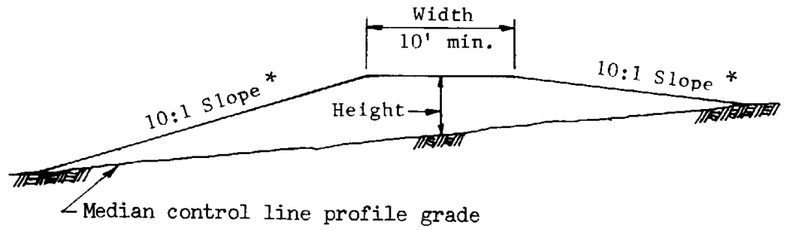

TYPE B TRANSVERSE MEDIAN DYKE

* Slope relative to grade of median at intersection with toe.

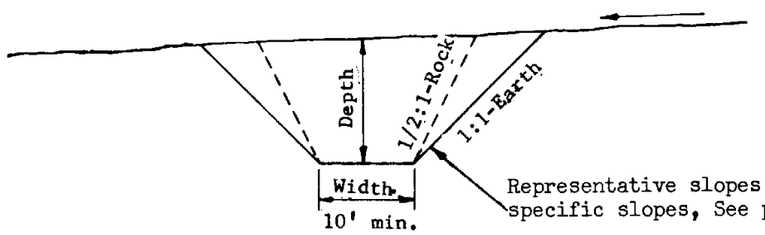

GENERAL CHANNEL SLOPES

Representative slopes only. For specific slopes, See plans.

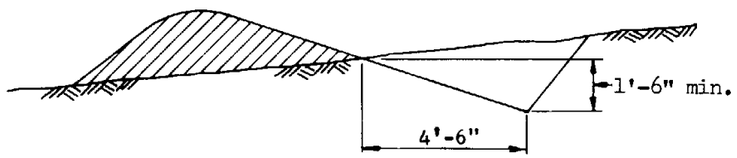

GRADER DITCH

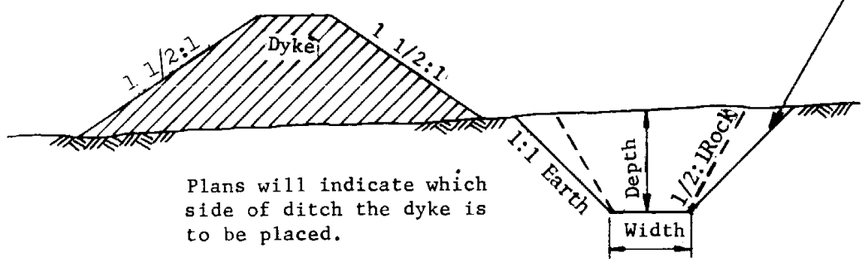

Plans will indicate which side of ditch the dyke is to be placed.

DITCH AND DYKE

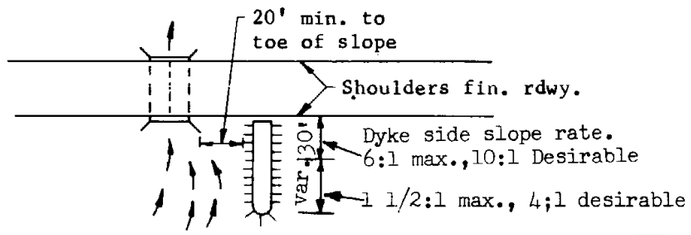

TYPICAL DYKE INSTALLATION AT STRUCTURE

Place dykes at structures to create a water cushion.

DESIGN APPROVED	STATE OF ARIZONA DEPARTMENT OF TRANSPORTATION DIVISION OF HIGHWAYS STANDARD DRAWINGS	REV. 6/74
APPROVED FOR DISTRIBUTION	Ditches and Dykes	DRAWING NO. C-3.01

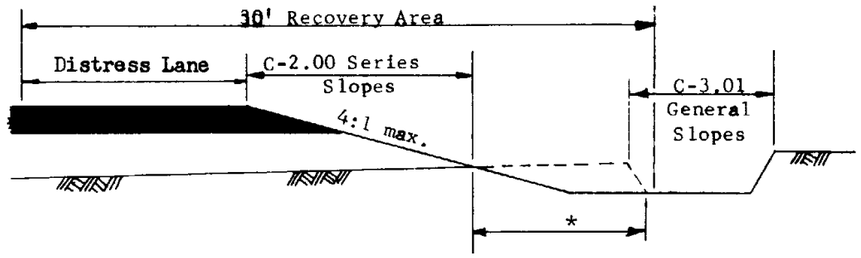

* If channel lies within recovery area, use continuation of emb. slope for inner channel slope and 4:1 slope rate for outer channel slope.

CHANNEL

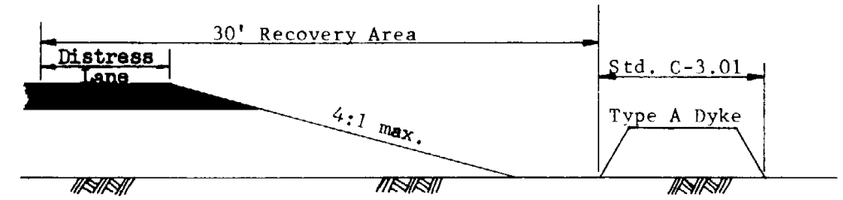

DYKE OUTSIDE RECOVERY AREA

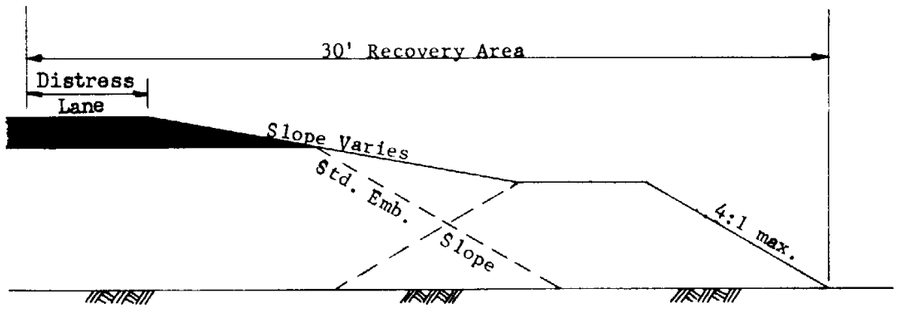

DYKE WITHIN RECOVERY AREA

GENERAL NOTES

See also Std. C-3.01

DESIGN APPROVED	STATE OF ARIZONA DEPARTMENT OF TRANSPORTATION DIVISION OF HIGHWAYS STANDARD DRAWINGS	REV.
APPROVED FOR DISTRIBUTION	CHANNELS & DYKES TYP. PARALLEL INSTALLATIONS	DRAWING NO. C-3.02

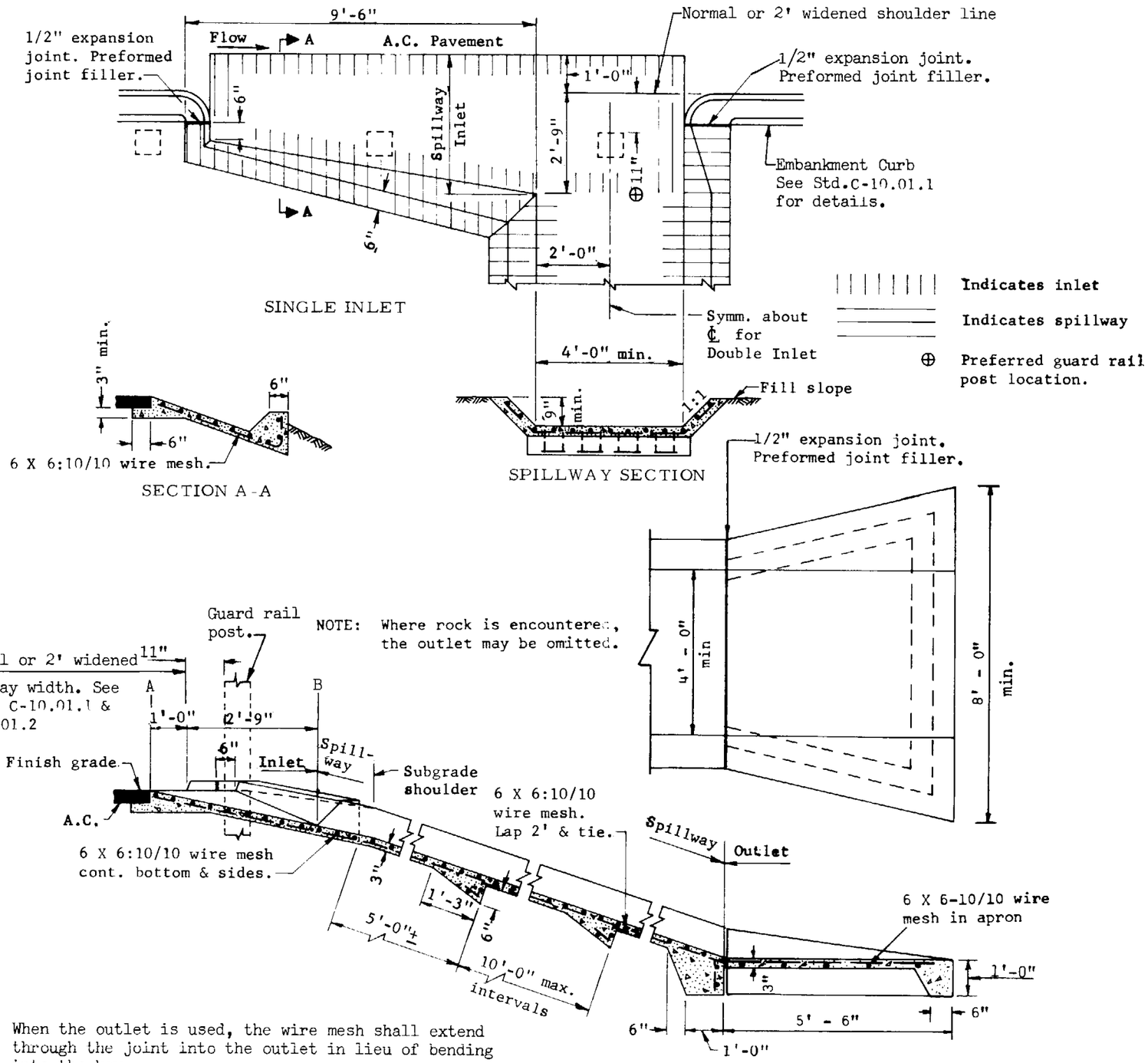

NOTE: When the outlet is used, the wire mesh shall extend through the joint into the outlet in lieu of bending into the key.
Spillway invert slope shall be uniformly downward from A to B.

SECTION ON SPILLWAY ℄
DOUBLE INLET

GENERAL NOTES

Concrete for the spillway inlet, spillway and outlet shall be Class A.

Concrete for the embankment curb shall be in accordance with Section 611 of Standard Specifications.

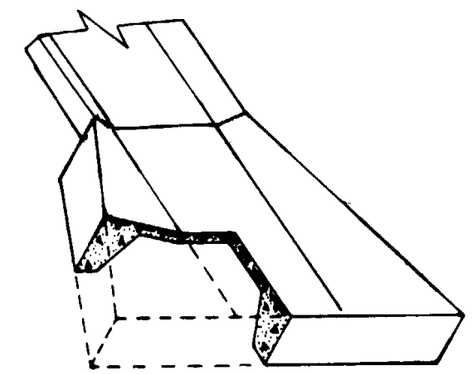

OUTLET DETAIL

DESIGN APPROVED	STATE OF ARIZONA DEPARTMENT OF TRANSPORTATION DIVISION OF HIGHWAYS STANDARD DRAWINGS	REV. 6/74
APPROVED FOR DISTRIBUTION	SPILLWAY, EMBANKMENT	DRAWING NO. C-4.01

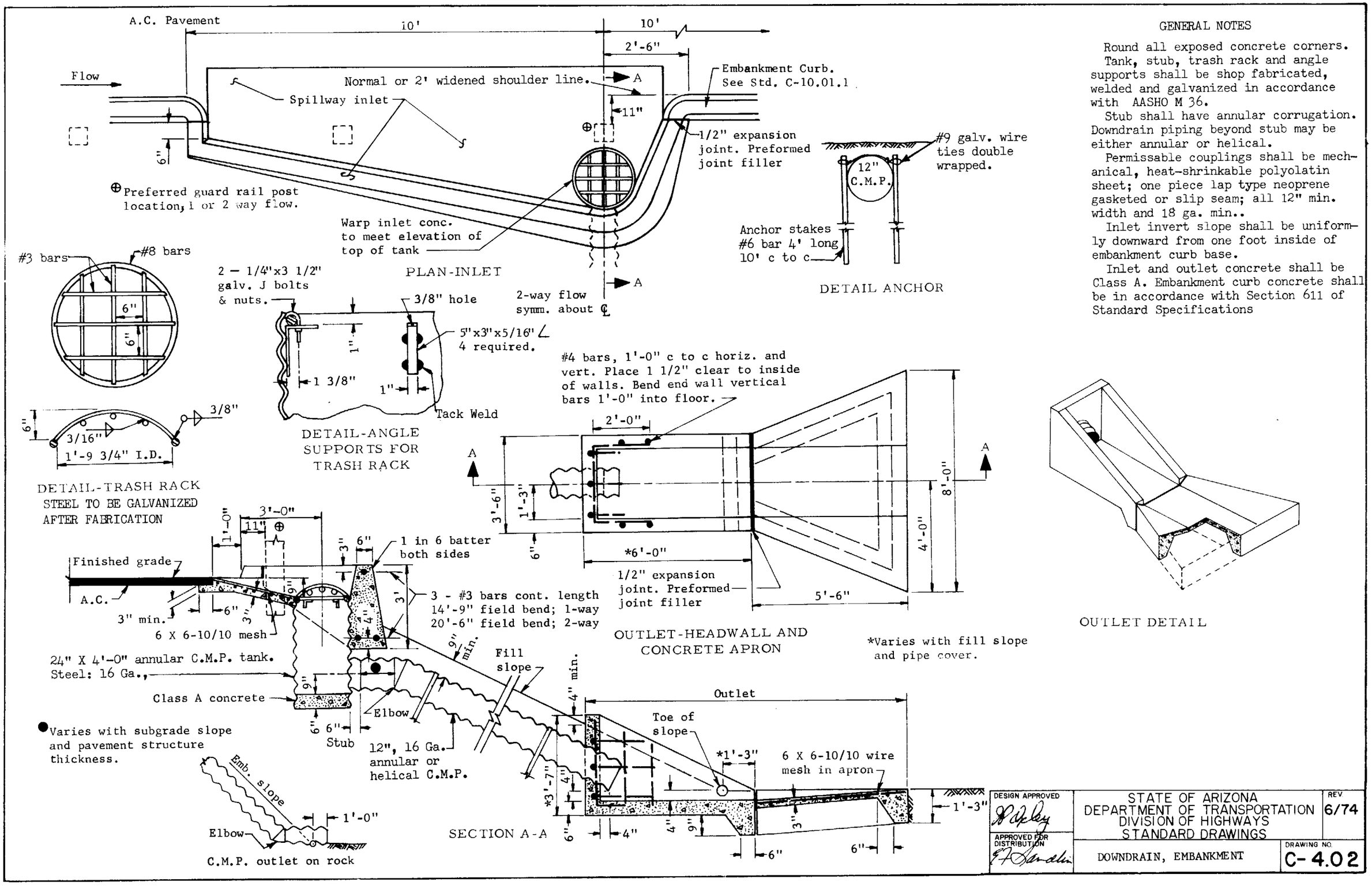

GENERAL NOTES

Round all exposed concrete corners.

Tank, stub, trash rack and angle supports shall be shop fabricated, welded and galvanized in accordance with AASHO M 36.

Stub shall have annular corrugation. Downdrain piping beyond stub may be either annular or helical.

Permissable couplings shall be mechanical, heat-shrinkable polyolatin sheet; one piece lap type neoprene gasketed or slip seam; all 12" min. width and 18 ga. min..

Inlet invert slope shall be uniformly downward from one foot inside of embankment curb base.

Inlet and outlet concrete shall be Class A. Embankment curb concrete shall be in accordance with Section 611 of Standard Specifications

DESIGN APPROVED	STATE OF ARIZONA DEPARTMENT OF TRANSPORTATION DIVISION OF HIGHWAYS STANDARD DRAWINGS	REV 6/74
APPROVED FOR DISTRIBUTION	DOWNDRAIN, EMBANKMENT	DRAWING NO. C-4.02

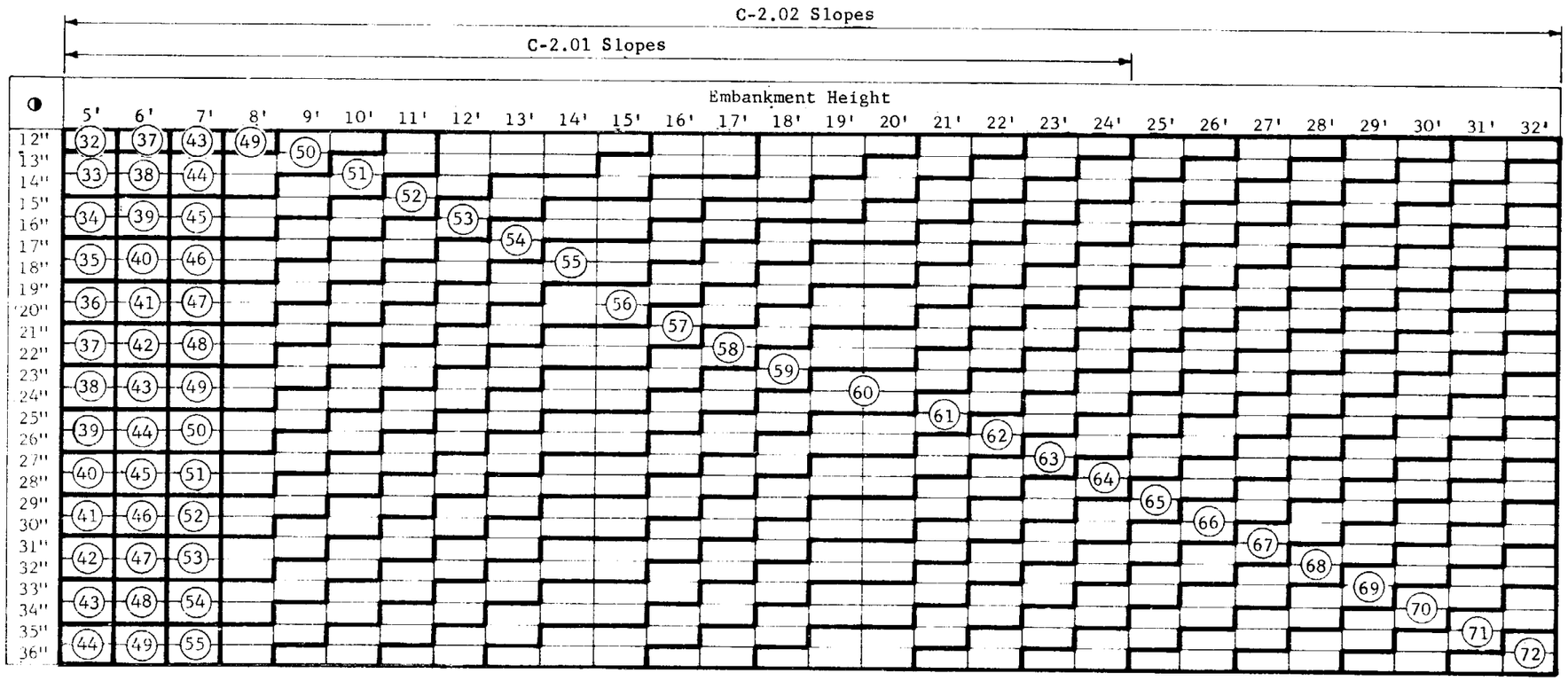

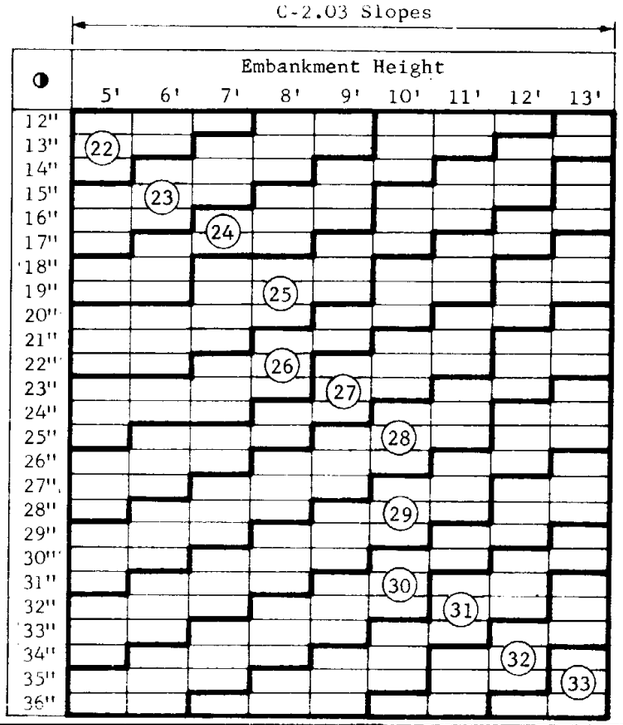

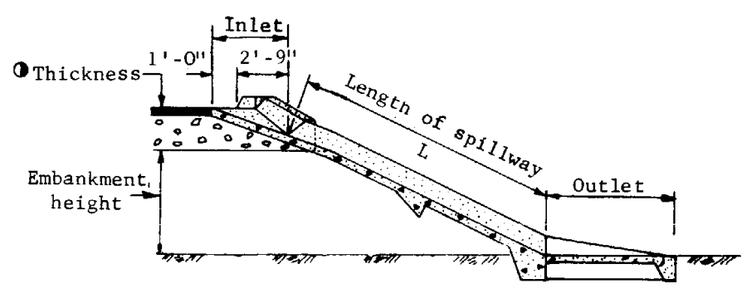

GENERAL NOTES

For C-2.01 slopes with emb. height over 24', L = L for 24' emb. height from table + 2.24(emb. height - 24).

For C-2.02 slopes with emb. height over 32', L = L for 32' emb. height from table + 1.8(emb. height - 32).

For C-2.03 slopes with emb. height over 13', L = L for 13' emb. height from table + 1.8(emb. height - 13).

◑ Indicates thickness of pavement structure.

◯ Indicates Length of Spillway.

DESIGN APPROVED	STATE OF ARIZONA DEPARTMENT OF TRANSPORTATION DIVISION OF HIGHWAYS STANDARD DRAWINGS	REV. 5/72
APPROVED FOR DISTRIBUTION	SPILLWAY, EMBANKMENT, LENGTH TABLE	DRAWING NO. C-4.03

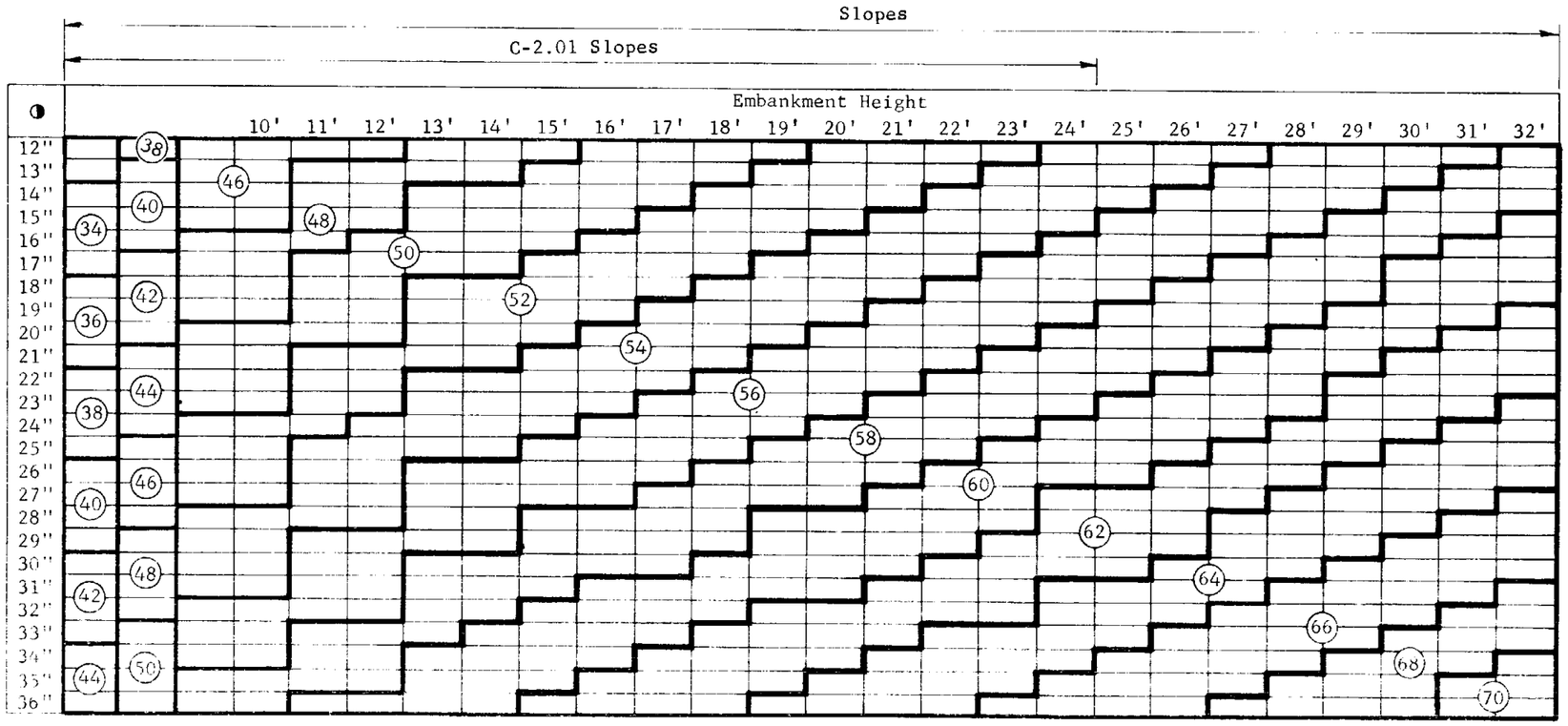

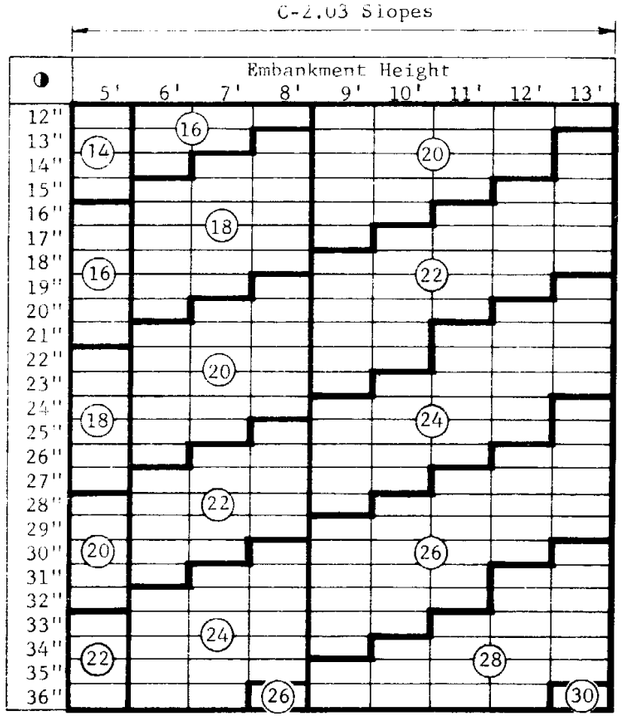

GENERAL NOTES

For C-2.01 slopes with emb. height over 24', L = L for 24' emb. height from table + 2.24(emb. height - 24).

For C-2.02 slopes with emb. height over 32', L = L for 32' emb. height from table + 1.8(emb. height - 32).

For C-2.03 slopes with emb. height over 13', L = L for 13' emb. height from table + 1.8(emb. height - 13).

◑ Indicates thickness of pavement structure.

◯ Indicates length of Downdrain.

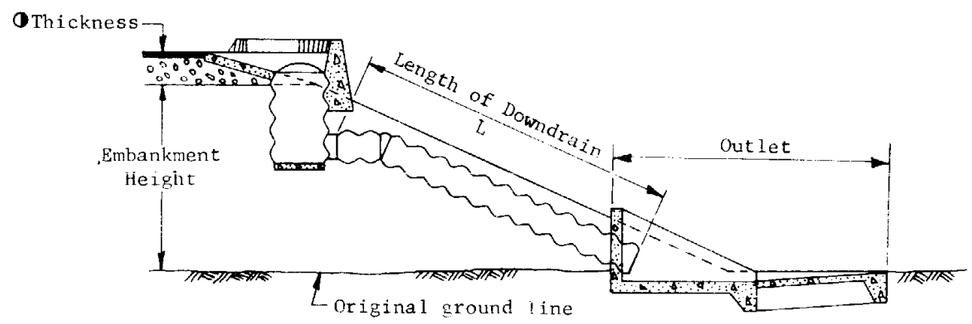

DESIGN APPROVED	STATE OF ARIZONA DEPARTMENT OF TRANSPORTATION DIVISION OF HIGHWAYS STANDARD DRAWINGS	REV 6/74
APPROVED FOR DISTRIBUTION	DOWNDRAIN, EMBANKMENT, LENGTH TABLE	DRAWING NO. C-4.04

NOTE: Radii shown for single curbs are typical throughout for respective type.
h=curb height as shown on Plans.

SINGLE CURB

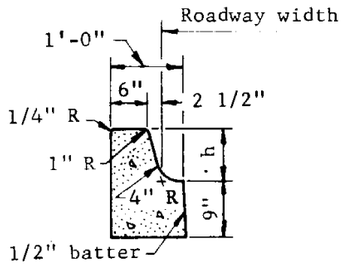

COMBINED CURB & GUTTER

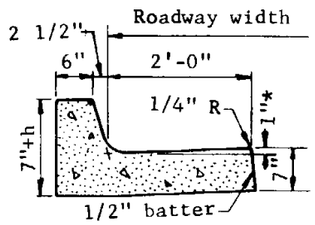

TYPE "A"
For 6" curb height or over

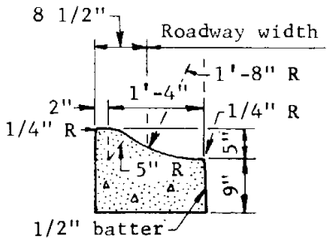

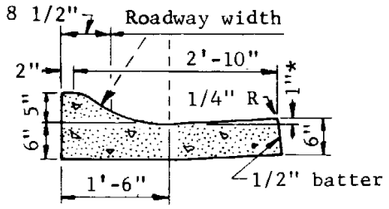

TYPE "E"

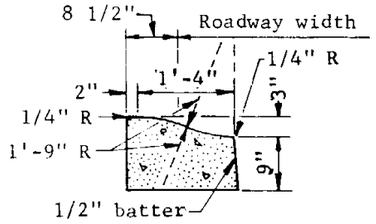

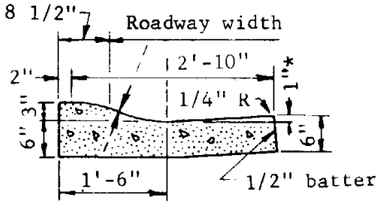

TYPE "F"

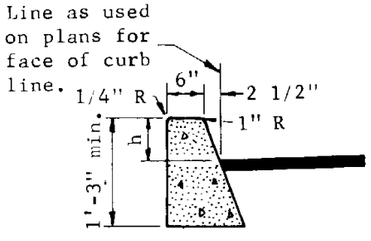

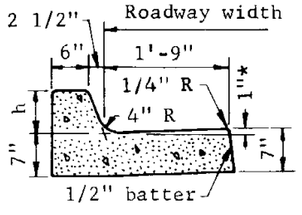

TYPE "G"

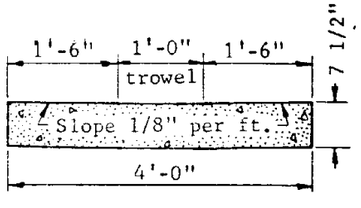

VALLEY GUTTER

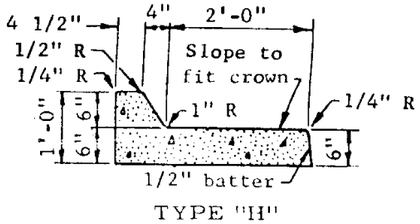

TYPE "H"

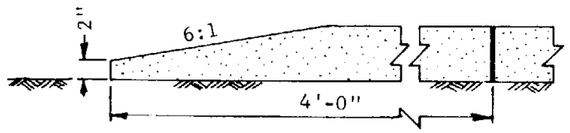

CURB TERMINAL SECTION

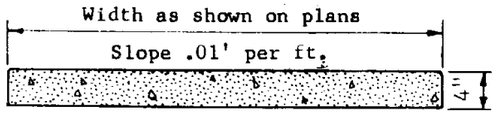

CONCRETE SIDEWALK

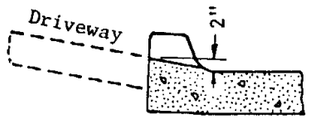

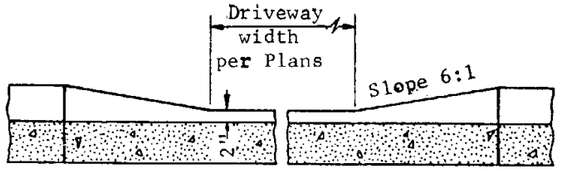

Center joint required if driveway width over 20'.

◑ DEPRESSED CURB FOR DRIVEWAY ENTRANCE

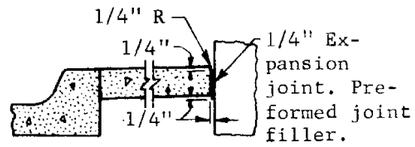

◑ SIDEWALK EXPANSION JOINT AT STRUCTURES

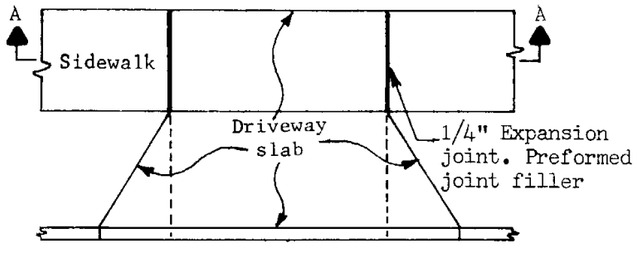

PLAN

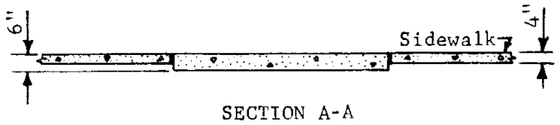

SECTION A-A

Joint is required between driveway slab and adjacent sidewalk.

◑ SIDEWALK AT DRIVEWAY

GENERAL NOTES

Curb and combined curb and gutter shall be Class A concrete and may be either formed or extruded.

Finish shall be smooth trowel with final fine brush finish parallel to the curb.

Curb, or curb and gutter, shall have a hand tooled or sawed joint 1 inch to 1 1/2 inch deep at locations matching the joints in the adjacent P.C.C. pavement or at approximately 15 feet centers when adjacent to bituminous pavement. At tangent points in curb returns, and at structures, joint shall be constructed with 1/2" bituminous type preformed expansion joint filler conforming to AASHO M-33 or AASHO M-153, Type B, extending all the way through the concrete for expansion relief.

*When curb and gutter section is located with the roadway section sloping toward the gutter, the slope provided by the 1 inch drop shall be in addition to the roadway cross slope. Similarly, when the curb and gutter section is located with the roadway section sloping away from the curb, the gutter slope shall match the roadway cross slope.

Sidewalk shall be Class A concrete. Finish shall be by float, smooth troweling and brooming with brooming transverse to traffic. 1/4", edged expansion joints shall be located to match those in adjacent curb, at 60' intervals with no curb and at driveways and adjacent structures. ◑ Expansion joint filler shall be premolded and conform to ASTM D 1751. Sidewalk surface shall be marked into rectangles not less than 12' square or more than 20' square with scoring tool which leaves edges rounded.

DESIGN APPROVED	STATE OF ARIZONA DEPARTMENT OF TRANSPORTATION DIVISION OF HIGHWAYS STANDARD DRAWINGS	REV 6/74
APPROVED FOR DISTRIBUTION	Curb, Gutter, Sidewalk & Driveway Details	DRAWING NO C-5.01

NOTE: Shaded area to be constructed & measured as valley gutter. Area(sq.ft.)/4' =lin. ft.

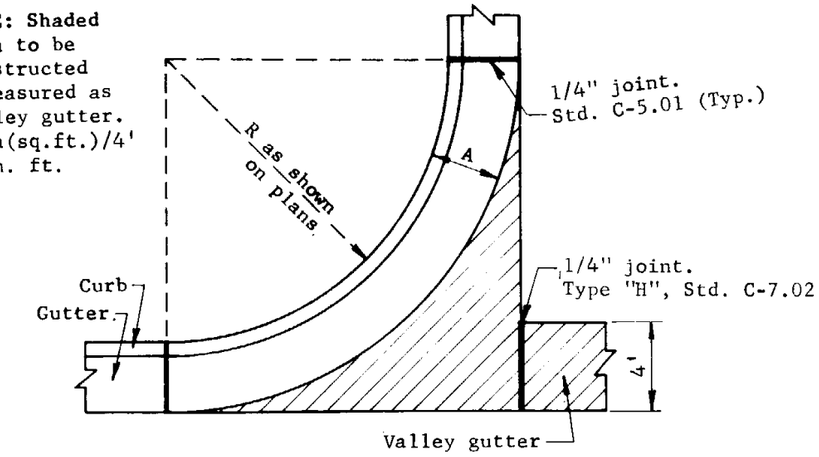

TYPICAL VALLEY GUTTER CONSTRUCTION AT STREET INTERSECTION OR ALLEY

A = Overall curb and gutter width.
d = Drop from point controlled by grade to outside edge of gutter.
F = Total crown from ℄ elev. to gutter grade.
a = Distance from ℄ to inside edge of gutter.
b = Distance from outside edge of gutter to point controlled by grade.
e = Drop from ℄ to inside edge of gutter.

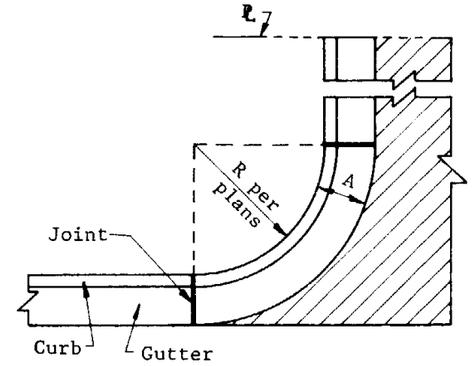

TYPICAL CONCRETE ALLEY OR DRIVEWAY CONSTRUCTION

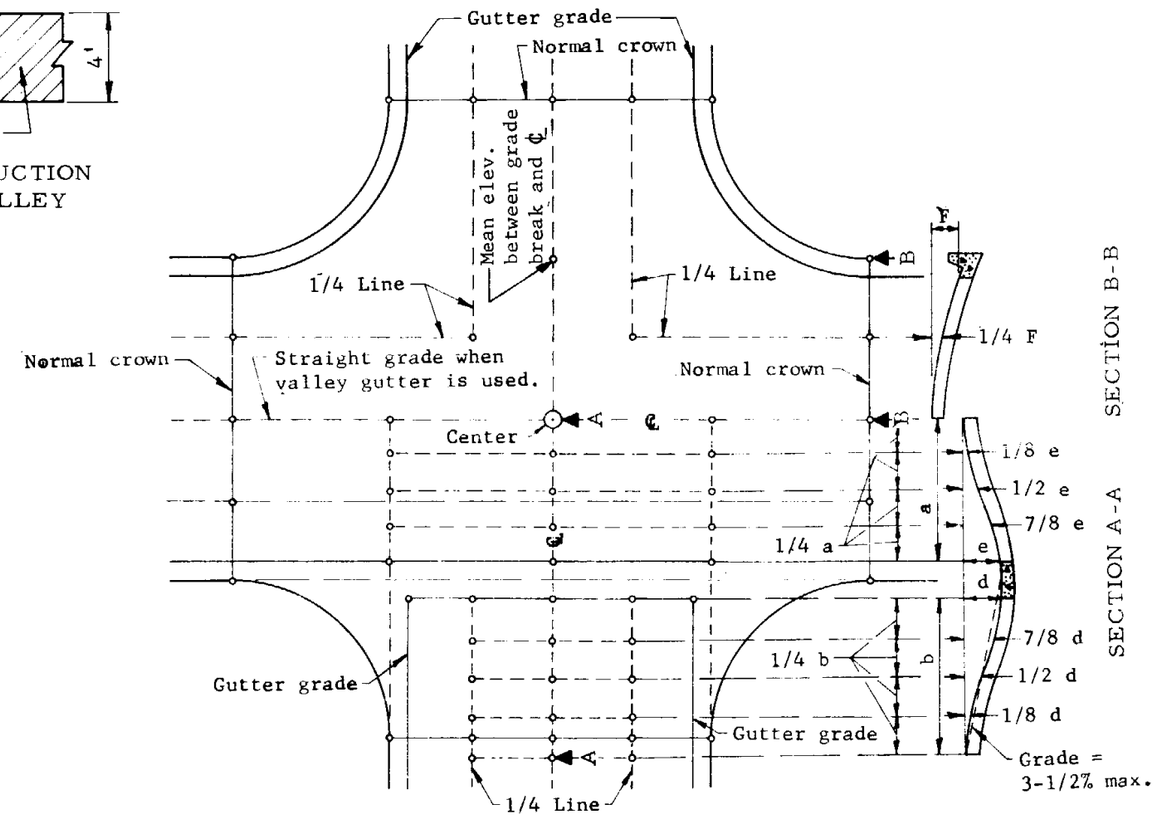

GENERAL NOTES

To determine the value of F, see roadway typical section.

For Curb and Gutter details, see Std. C-5.01.

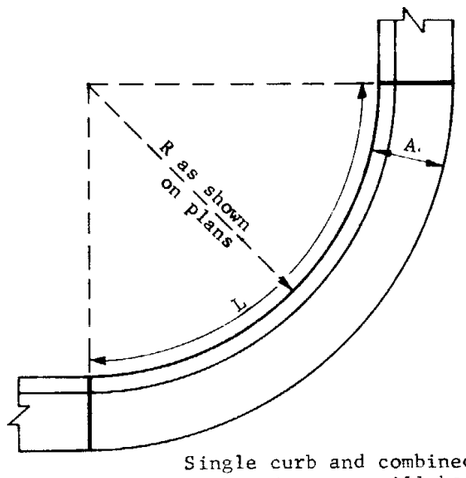

Single curb and combined curb and gutter will be measured along the back of the curb.

CURB & GUTTER MEASUREMENT ON CURVES

FORMULA FOR QUARTER POINTS

S = Sum of intersecting pavement widths. (Distance between gutter grade lines.)
D = Drop from center of intersection to center of return

where S =	0' to 90',	P = 0.17
" S =	91' to 100',	P = 0.18
" S =	101' to 110',	P = 0.19
" S =	111' to 136',	P = 0.20

PD = Drop from center of intersection to quarter point.

STREET INTERSECTION GRADES

DESIGN APPROVED	STATE OF ARIZONA DEPARTMENT OF TRANSPORTATION DIVISION OF HIGHWAYS STANDARD DRAWINGS	REV
APPROVED FOR DISTRIBUTION	GEOMETRICS, STREET INTERSECTION	DRAWING NO. C-5.02

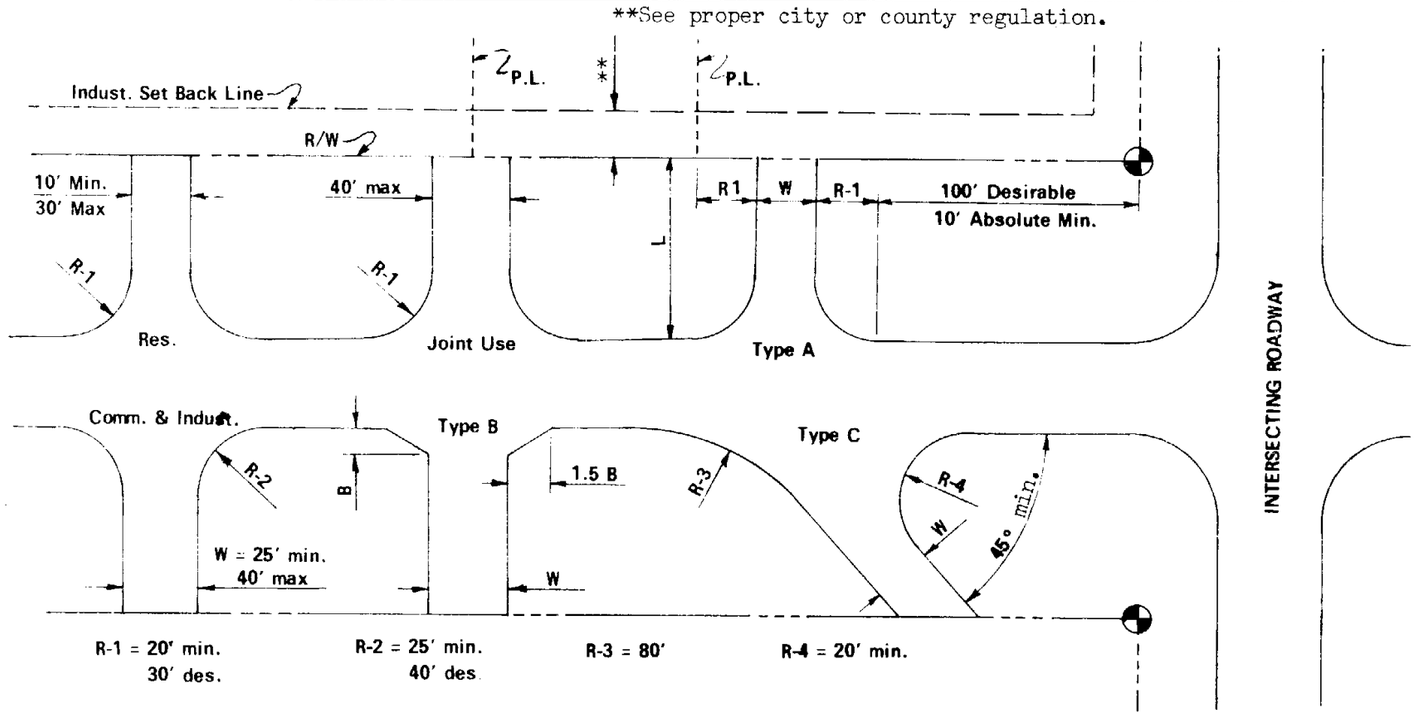

RURAL DEVELOPMENTS

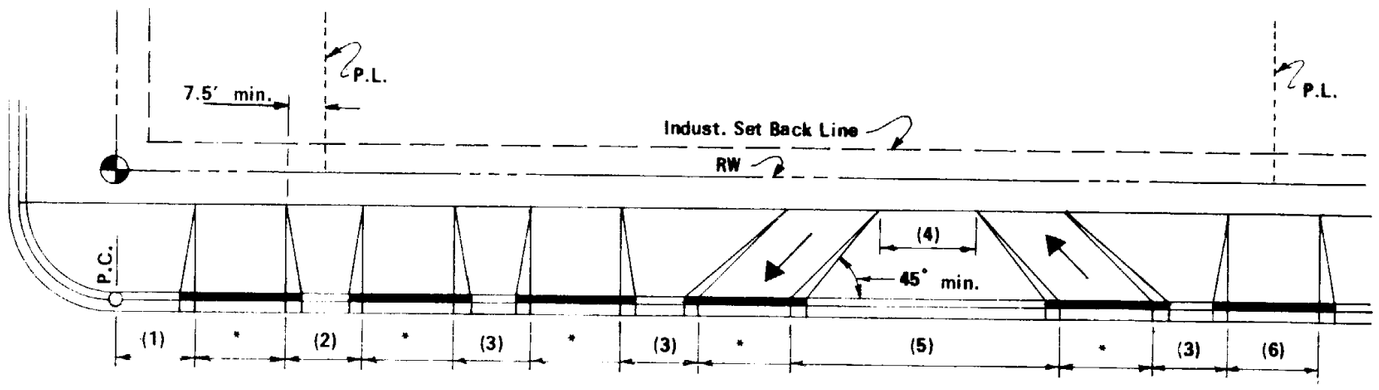

(1) 10' min., 20' des.
(2) 15' min.
(3) 25' min., 40' des.
(4) 40' min.
(5) One way couplet for use only on one way roadways.
(6) 40' max. joint use d'way

* Residential: 10' min., 30' max.
Commercial:
One way, 15' min., 30' max.
Two way, 25' min., 40' max.
Industrial: 20' min., 40' max.

URBAN DEVELOPMENTS

GENERAL NOTES

Paved Turnouts: Plans notation will be WxL, surface material, type and standard. Example: 20' X 30' A.C.T.O., Type A, Standard C-6. 01, Show R graphically.

Base material shall be the same as what shown for main roadway, unless otherwise noted.

Excavation or embankment for turnouts shall be included in quantities for main roadways.

Dimensions indicated as minimum shall be avoided whenever possible in favor of those indicated as desirable.

Driveways and depressed curbs shall be located as noted on plans or as directed by the Engineer.

The Type 'A' turnout is the preferable turnout design. Type 'B' and 'C' shall only be used when absolutely necessary.

Driveway Types:

Residential - one providing access to a single family residence, to a duplex, or to an apartment building containing five or fewer dwelling units.

Commercial - one providing access to an office, retail or institutional building or to an apartment building having more than five dwelling units.

Industrial - one directly serving a substantial number of truck movements to and from loading docks of an industrial facility, warehouse or truck terminal.

Driveways for high volume traffic generators shall be approved individually by Traffic Engineering Section.

Driveways with curb returns in urban areas shall be installed only with the approval of Traffic Engineering Section.

Joint Use Driveways - it may become desirable for landowners of adjacent properties to require a joint driveway to service both properties. If this is the case, only one of the two adjacent landowners need apply for the access permit, but a notorized written mutual agreement, signed by all parties involved, must accompany the application form.

Construction of curb, gutter and sidewalk in urban areas by the permitee, along that portion of the highway frontage under permit application, may be a stipulation of the permit approval if there appears to be reasonable need.

Drainage structures shall be provided under driveways where necessary.

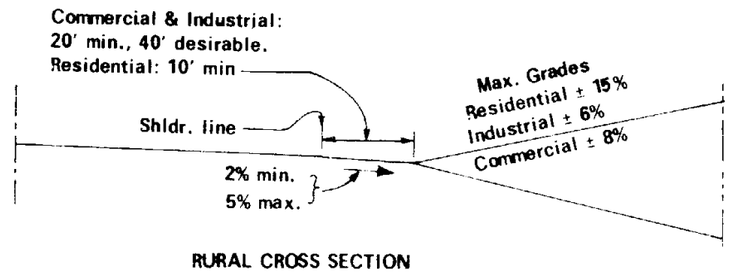

RURAL CROSS SECTION

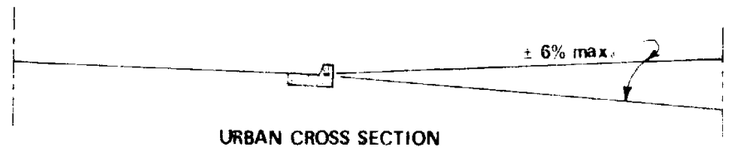

URBAN CROSS SECTION

DESIGN APPROVED	STATE OF ARIZONA DEPARTMENT OF TRANSPORTATION DIVISION OF HIGHWAYS STANDARD DRAWINGS	REV 6/74 11/74
APPROVED FOR DISTRIBUTION	TURNOUT & DRIVEWAY LAYOUT	C-6.01

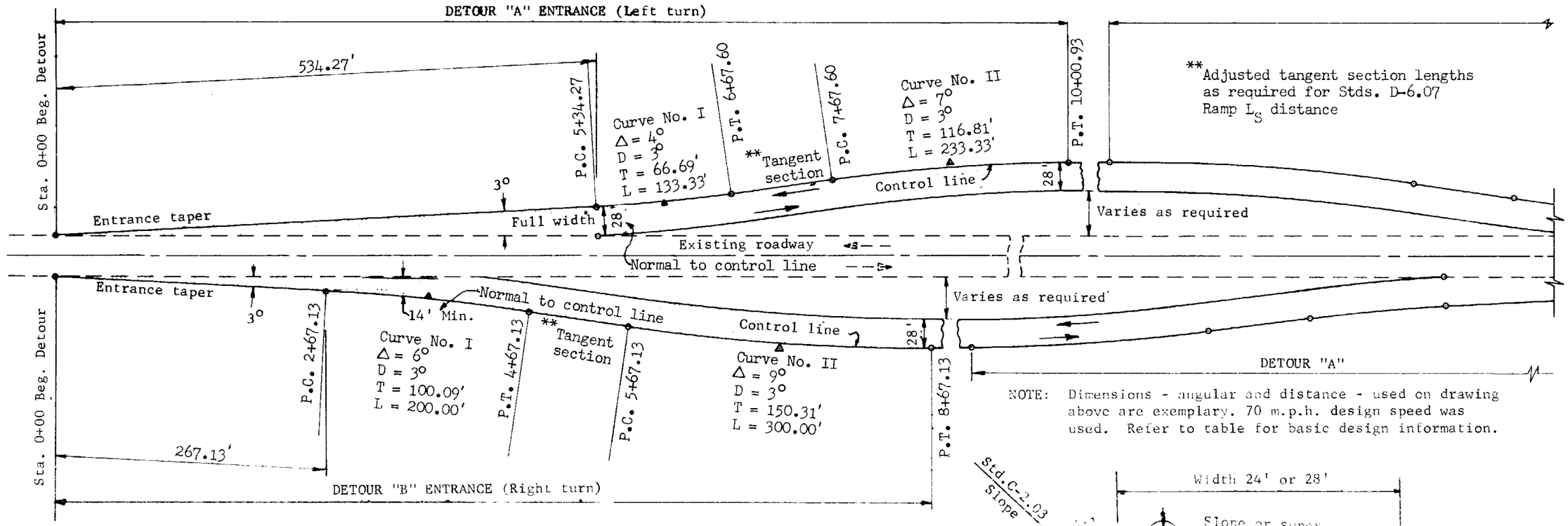

NOTE: Dimensions - angular and distance - used on drawing above are exemplary. 70 m.p.h. design speed was used. Refer to table for basic design information.

SPECIAL DETOUR SECTION

GENERAL NOTES

Detour "A" entrance shall be used where approaching vehicle must turn left. Detour "B" shall be used where approaching vehicle must turn right.

Detour from a horizontal curve: On the inside of the curve the detour take off shall be a curve, see table. On the outside a tangent take off shall be used. A vertical curve may be required to effect a smooth grade change.

The design speed shall be comparable between vertical and horizontal alignment.

The entrance design speed of a detour shall not be less than the normal posted speed of the existing roadway. The design speed for the remainder of the detour may be 20 m.p.h. less than the normal posted speed.

Any intermediate detour entrance may be designed on the basis of normal posted speed less 20 m.p.h. where visible construction activity has slowed traffic for the preceding 1/4 mile.

The minimum width of the detour shall be 28' for existing roadways 34' or wider and a minimum of 24' for existing roadways less than 34' in width.

The entrance taper for Detour "A" shall be extended until full detour width is attained. For Detour "B" the entrance taper shall be extended until a minimum of 14' is attained beyond the edge of existing roadway.

Any deviation from this standard must be approved by the Plans Engineer and Traffic Engineer and the Engineer shall submit the alignment and profile of the proposed change for their review.

Native material used in constructing the detour embankment will be considered suitable for backfill around pipe; however, it shall be reasonably free of rocks and debris

Tangent Roadway		Curved Roadway		
Entrance Design Speed	Entr. Taper Def'l. Angle	Exist. Horiz. Curve	Detour "A" Take off Curve	Detour "B" Take off Curve
70	3°	1°	2°	2°30'
60	3°	2°	3°	3°30'
50	4°	3°	4°	5°
40	6°	4°	5°	6°
30	10°	5°	6°	7°
		6°	7°	8°
		7°	8°	9°
		8°	9°	10°

Entrance Design Speed	Max. Horizontal Curvature			
	Curve No. I		Curve No. II*	
	D	Superelev.	D	Superelev.
70	3°	.09'/ft.	3°	.06'/ft.
60	3°	.08'/ft.	4°	.05'/ft.
50	4°	.07'/ft.	6°	.05'/ft.
40	6°	.07'/ft.	10°	.05'/ft.
30	10°	.07'/ft.	19°	.05'/ft.

*Curve No. II superelevations are for a design speed 20 mph less than entrance speed.

DESIGN APPROVED
APPROVED FOR DISTRIBUTION

STATE OF ARIZONA
DEPARTMENT OF TRANSPORTATION
DIVISION OF HIGHWAYS
STANDARD DRAWINGS

GEOMETRICS, DETOUR

REV 6/74

DRAWING NO. C-6.02

S indicates sawed contraction control joint
CN indicates construction joint
LL indicates longitudinal joint
See Std. C-7.02

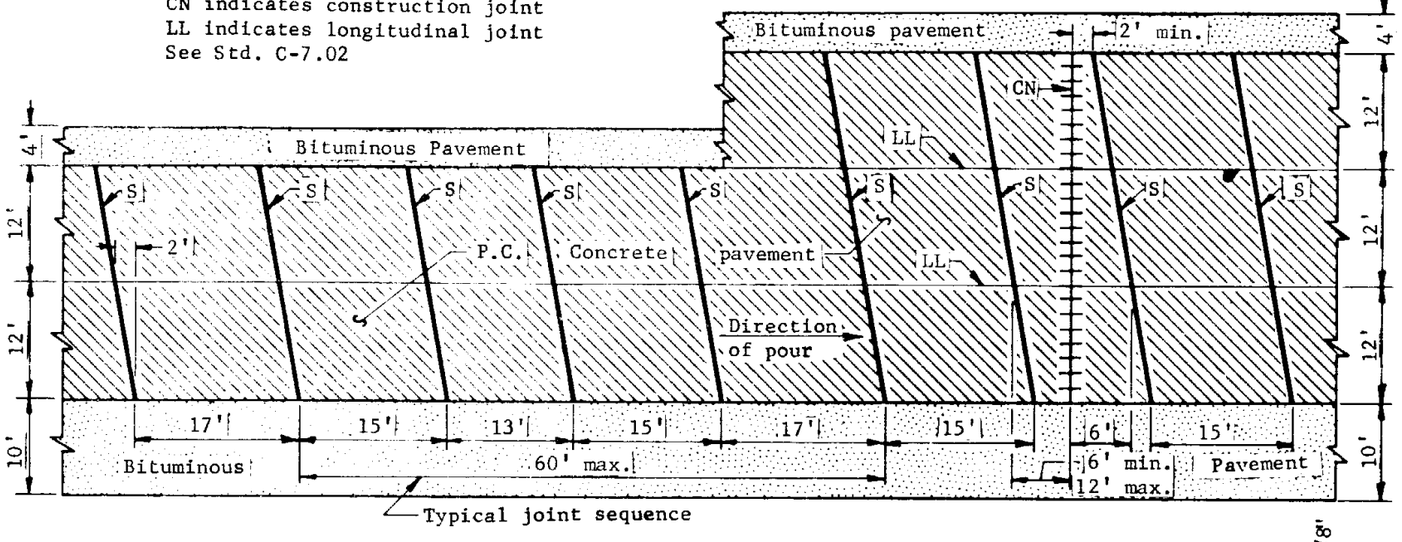

PLAN
See General Notes

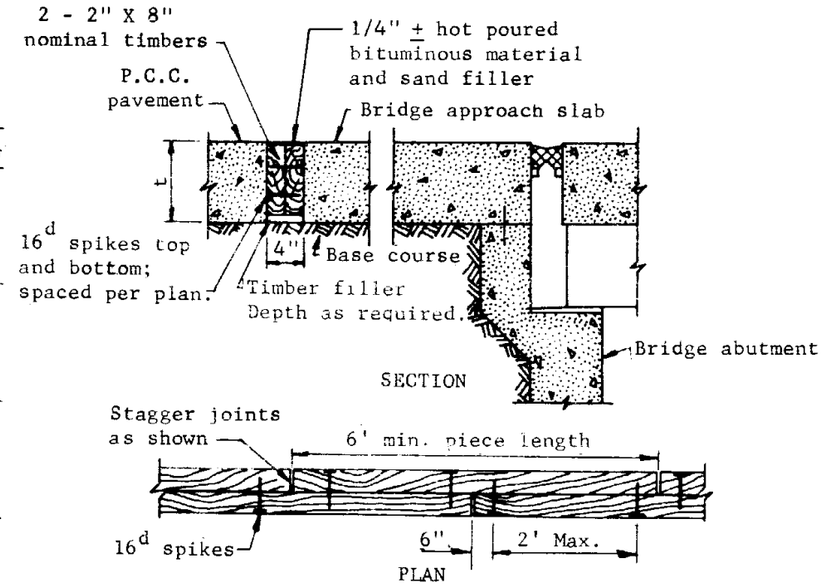

TRANSVERSE EXPANSION JOINT AT BRIDGE APPROACH SLAB

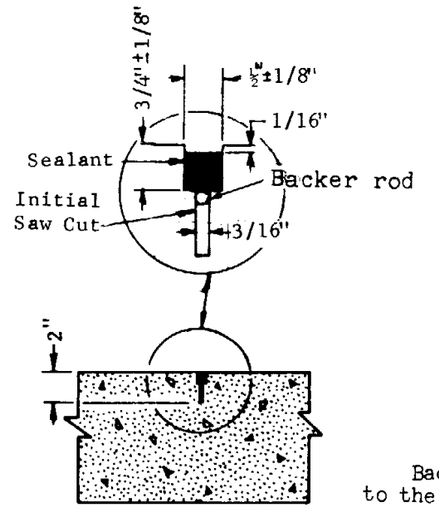

SAWED TYPE S
CONTRACTION CONTROL JOINT

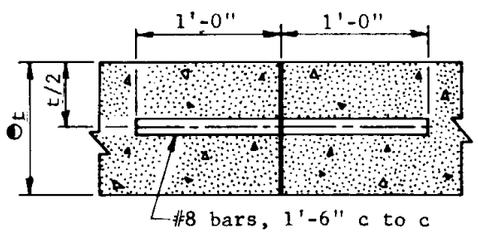

t Indicates P.C.C. thickness

CONSTRUCTION JOINT CN
To be used at end of pour

GENERAL NOTES

All transverse joints shall be in line with joints in adjacent slabs.

At intersection of side roads or streets, joints shall be placed to give the intersection a symmetrical appearance while conforming to the cross section of the intersecting road or street.

Timbers used in transverse expansion joint shall be rough redwood and conform to commercial grade.

Backer Rod - (Expanded cellular rubber) Shall conform to the requirements of ASTM D 1056 Grade # SBE 41.

DESIGN APPROVED	STATE OF ARIZONA DEPARTMENT OF TRANSPORTATION DIVISION OF HIGHWAYS STANDARD DRAWINGS	REV 6/74 11/74
APPROVED FOR DISTRIBUTION	PAVEMENT, CONCRETE, TRANSVERSE JOINTS	DRAWING NO. C-7.01

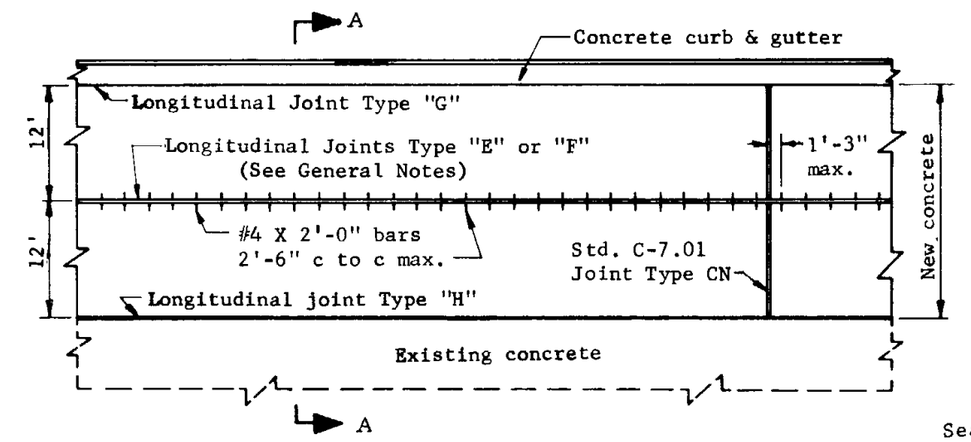

PLAN

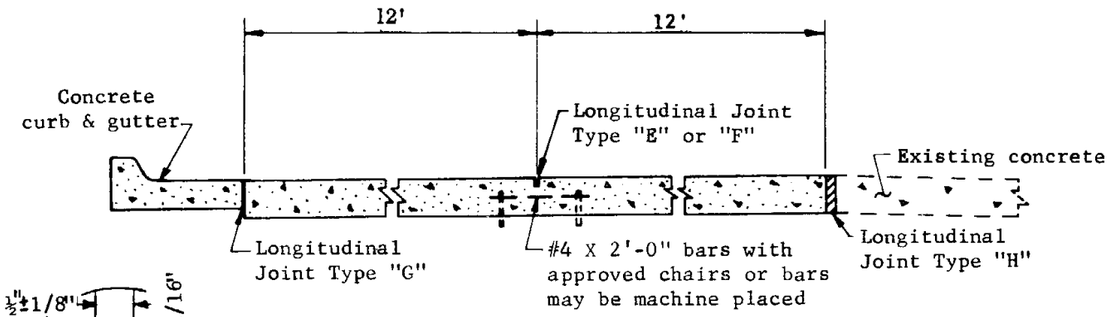

SECTION A-A

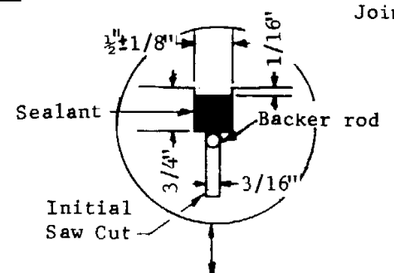

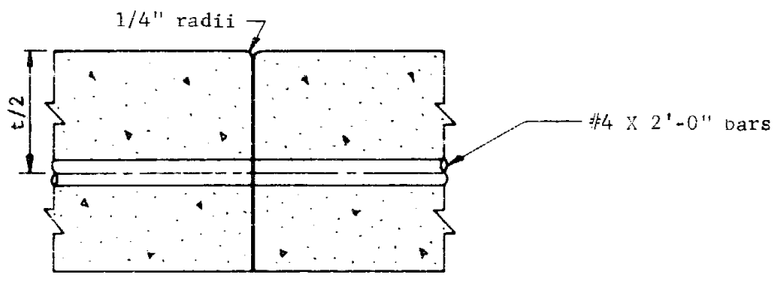

JOINT TYPE "E"
CONSTRUCTION JOINT

Note:
"t" indicates
pavement thickness

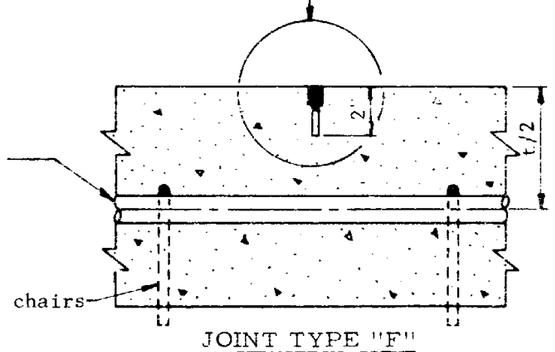

JOINT TYPE "F"
CONSTRUCTION JOINT

GENERAL NOTES

In slip form type pavement construction, Longitudinal Joint Type "F" shall be used. In fixed form type construction either Longitudinal Joint Type "E or "F" may be used.

Backer Rod - (Expanded cellular rubber) Shall conform to the requirements of ASTM D 1056 Grade # SBE 41.

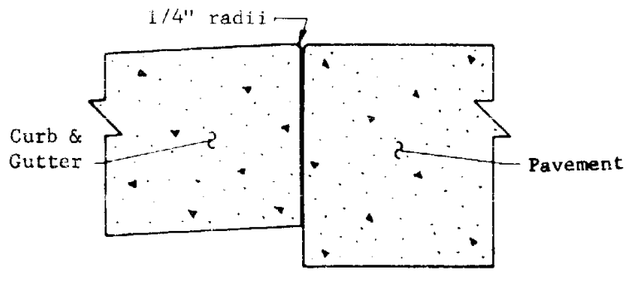

JOINT TYPE "G"

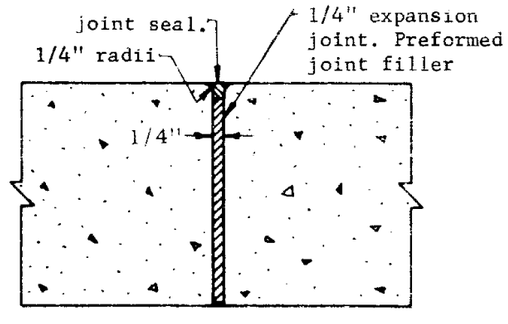

JOINT TYPE "H"
EXPANSION JOINT

LONGITUDINAL JOINT DETAILS

DESIGN APPROVED	STATE OF ARIZONA DEPARTMENT OF TRANSPORTATION DIVISION OF HIGHWAYS STANDARD DRAWINGS	REV 6/74 11/74
APPROVED FOR DISTRIBUTION	PAVEMENT, CONCRETE, LONGITUDINAL JOINTS	DRAWING NO C-7.02

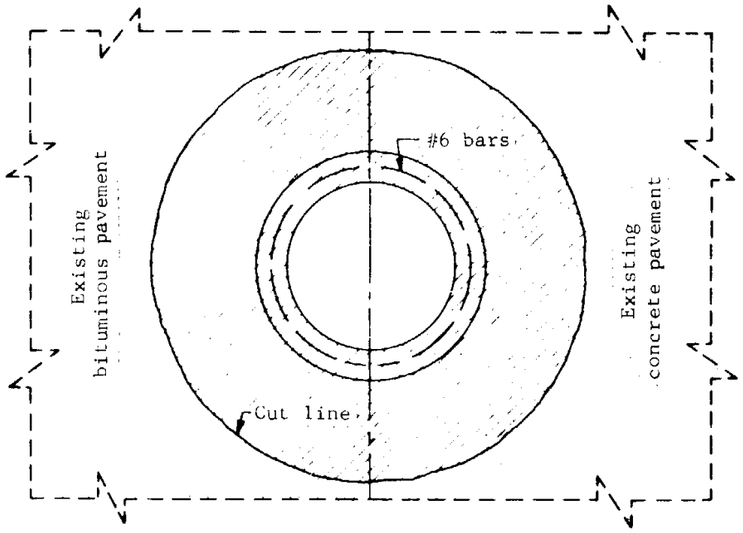

PLAN

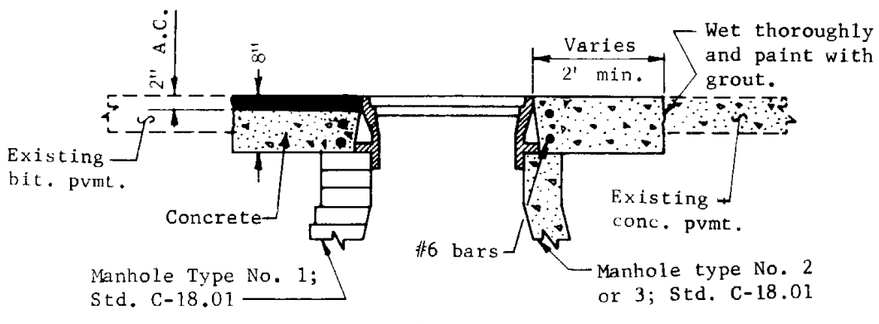

SECTION

PAVEMENT CUT REPLACEMENT FOR MANHOLE

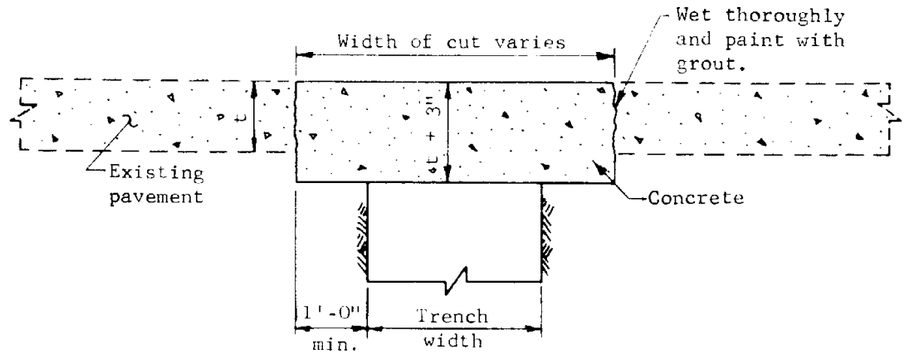

CUT IN CONCRETE PAVEMENT

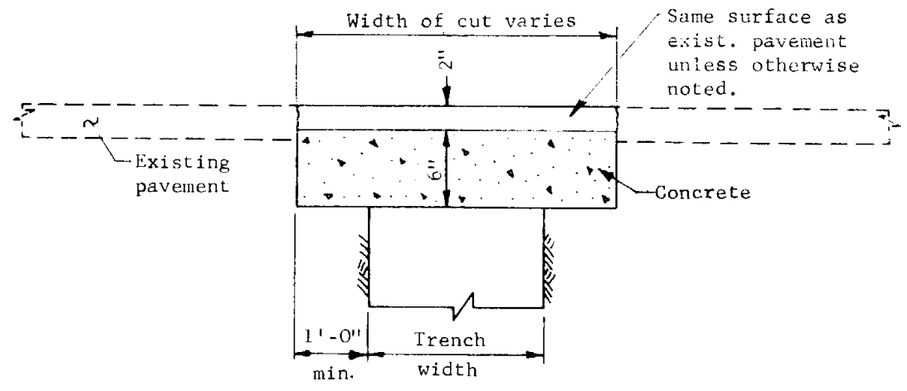

CUT IN BITUMINOUS PAVEMENT

GENERAL NOTES

All concrete shall be Class A.

DESIGN APPROVED	STATE OF ARIZONA DEPARTMENT OF TRANSPORTATION DIVISION OF HIGHWAYS STANDARD DRAWINGS	REV. 6/74
APPROVED FOR DISTRIBUTION	PAVEMENT, CUT & REPLACEMENT	DRAWING NO. C-7.03

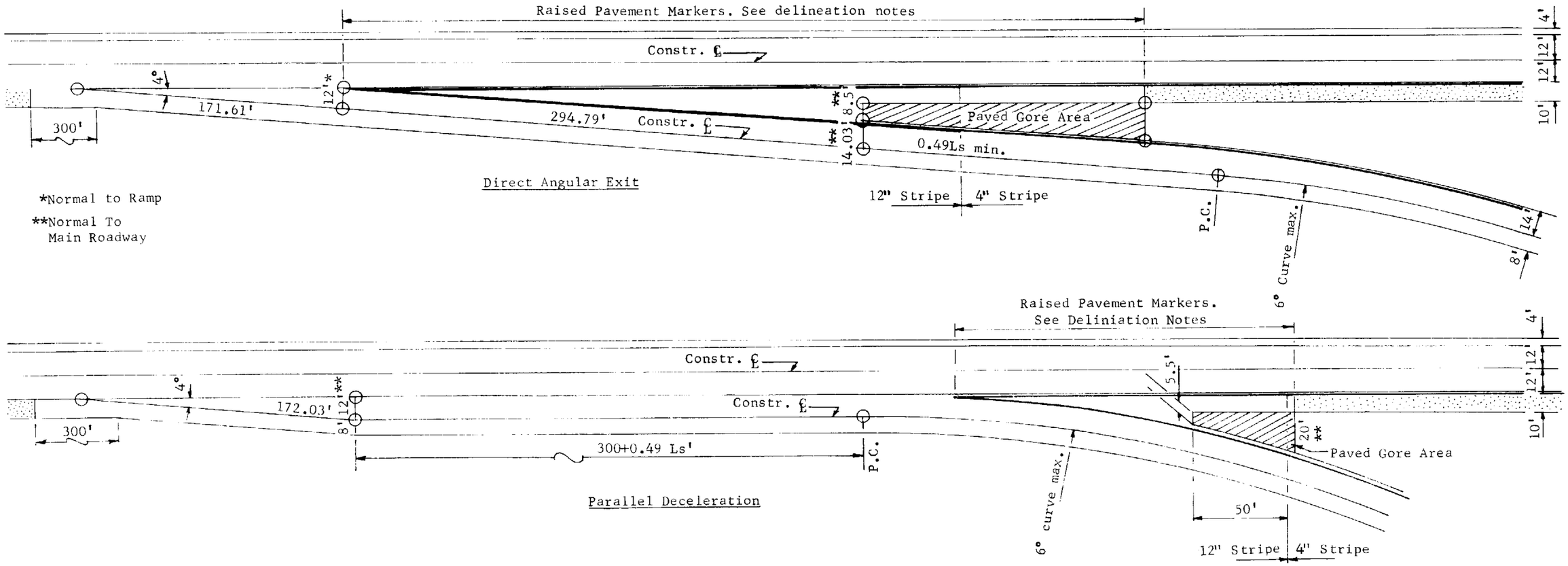

DELINEATION NOTES

1. Striping shall be in accordance with Std. 4-M-109.
2. In case one or both sides of paved gore area abuts P.C.C. pavement, raised pavement markers are to be installed as follows:
   (a) Right main rdwy. edge line, Std. 4-M-2.01, Type G, 25' intervals.
   (b) Left ramp edge line, Std. 4-M-2.01, Type H, 25' intervals.
3. If both sides of gore area abut bituminous pavement, no raised pvmt. markers are required.

GENERAL NOTES

1. For ramp cross section details, see Std. C-8.02.
2. For gore area paving details, see Std. C-8.02.
3. Shaded areas indicate differential shoulder delineation.
4. Parallel deceleration is to be used only under special conditions necessitating ramp curvature ahead of nose.

DESIGN APPROVED	ARIZONA DEPARTMENT OF TRANSPORTATION HIGHWAYS DIVISION STANDARD PLANS	6/74 7/75
APPROVED FOR DISTRIBUTION	GEOMETRICS, EXIT RAMP	PLAN NO. C-8.01

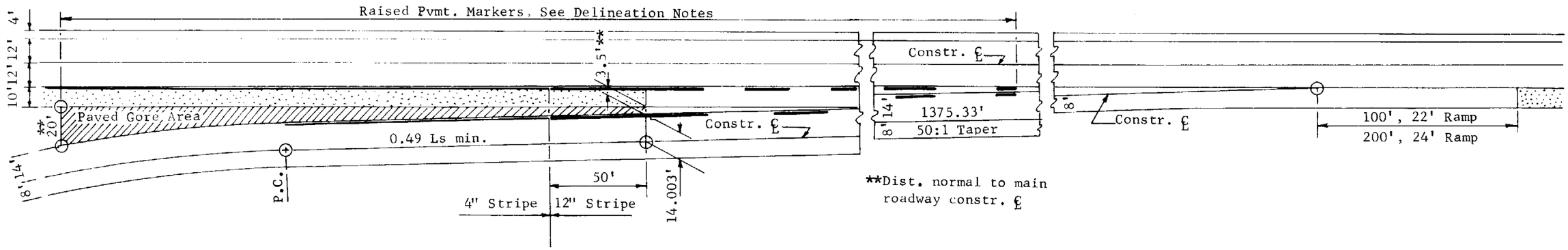

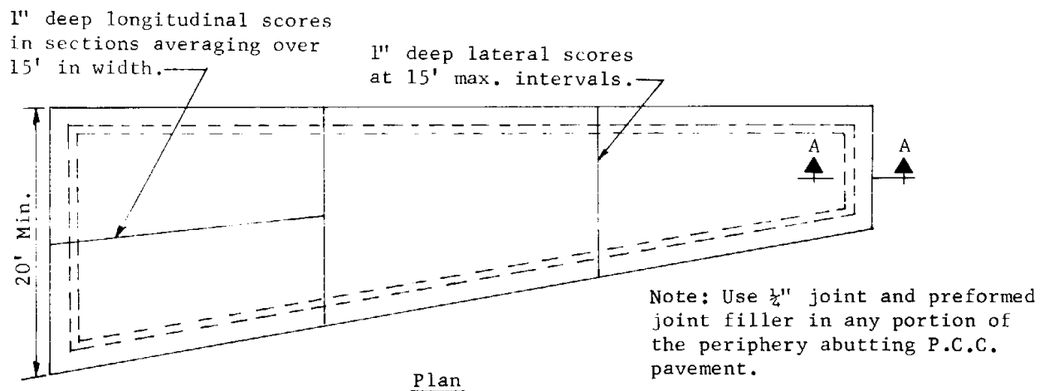

Plan

Note: Use ¼" joint and preformed joint filler in any portion of the periphery abutting P.C.C. pavement.

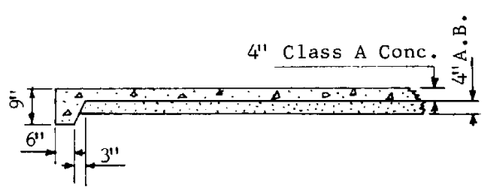

Section A-A

GORE AREA PAVING

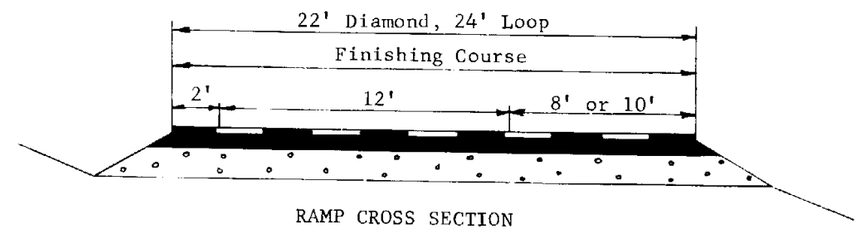

RAMP CROSS SECTION

DELINEATION NOTES

1. Striping shall be in accordance with Std. 4-M-109.
2. In case one or both sides of paved gore area abuts P.C.C. pavement raised pavement markers are to be installed as follows:
   (a) Right main roadway edge line, Std. 4-M-2.01, Type G, 25' intervals.
   (b) Left ramp edge line, Std. 4-M-2.01, Type H, 25' intervals.
3. If both sides of gore area abut bituminous pavement, no raised pavement markers are required.

GENERAL NOTES

1. The 50:1 taper and corresponding offsets shall also apply when the main roadway has curvature or combined tangent and curvature.
2. Gore area paving joints and scores shall be edged with a ¼" R. tool.
3. Shaded areas indicate differential shoulder delineation.
4. Min. nose paving length shall be that required to attain a width of 20'.

DESIGN APPROVED	ARIZONA DEPARTMENT OF TRANSPORTATION HIGHWAYS DIVISION STANDARD PLANS	REV. DATE 6/74 7/75
APPROVED FOR DISTRIBUTION	GEOMETRICS, ENTRANCE RAMP	PLAN NO. C-8.02

SHOULDER GROOVING

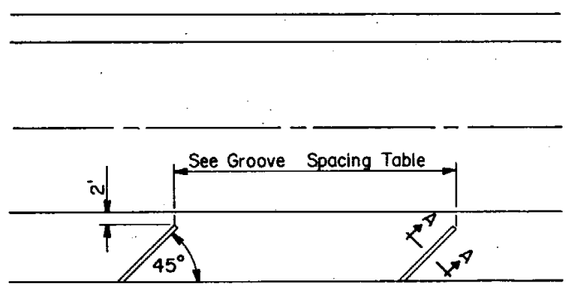

Normal Shoulder

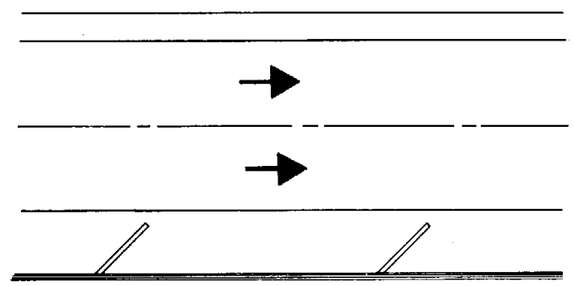

Shoulder With Embankment Curb

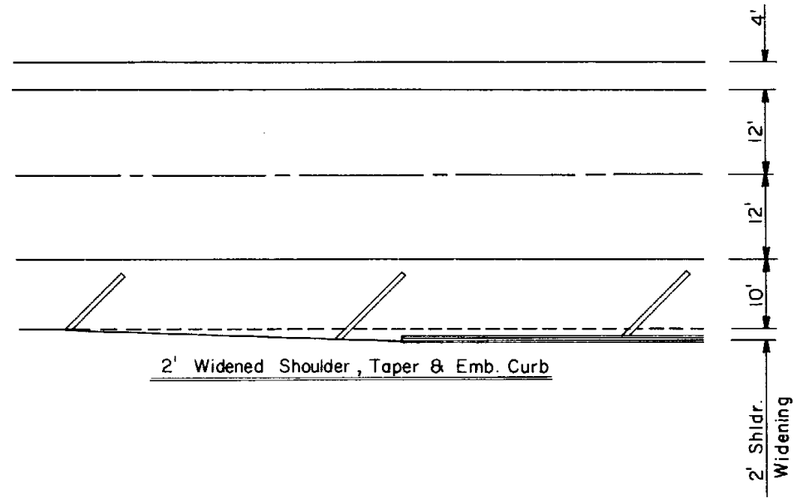

2' Widened Shoulder, Taper & Emb. Curb

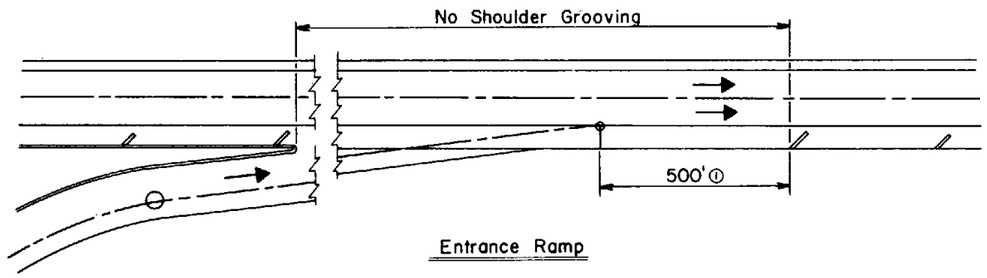

Entrance Ramp

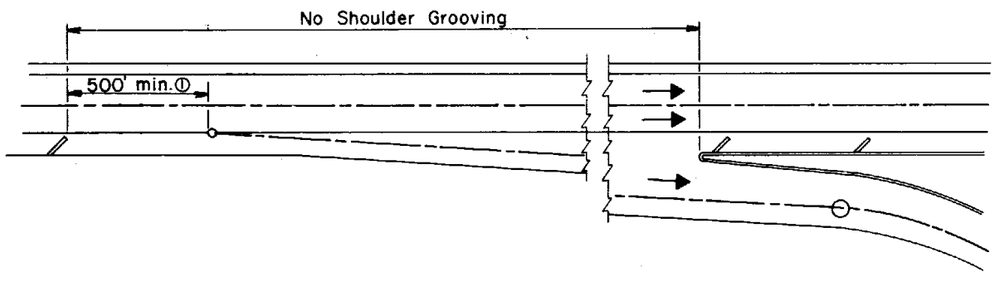

Exit Ramp

GROOVE SPACING	
Design Speed Per Plans M. P. H.	Spacing Ft.
80	60
70	50
60	45
55	40
50	35
40	30

GENERAL NOTES

Grooves in curbed shoulders shall terminate at the face of the single curb or at the edge of the gutter. Grooves shall extend through pavement edge of shoulders with no curb.

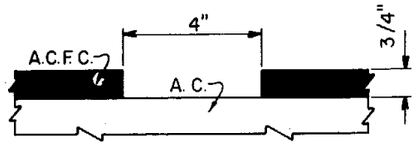

After A.C.F.C. Laydown

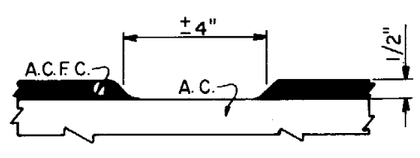

After A.C.F.C. Compaction

SECTION A-A
BITUMINOUS SHOULDERS

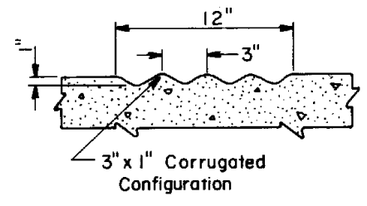

SECTION A-A
P.C.C. SHOULDERS

DESIGN APPROVED Carlin Bowman 4/7/78	STATE OF ARIZONA DEPARTMENT OF TRANSPORTATION DIVISION OF HIGHWAYS STANDARD DRAWINGS	REV. 8-78 ①
APPROVED FOR DISTRIBUTION F. R. Scudder 4/14/78	SHOULDER GROOVING	DRAWING NO. C-9.10

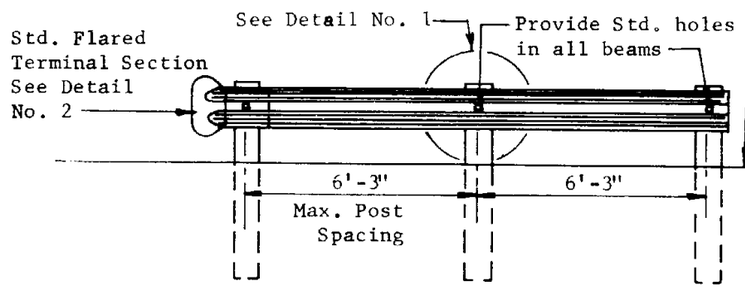

GUARD RAIL FACE ELEVATION

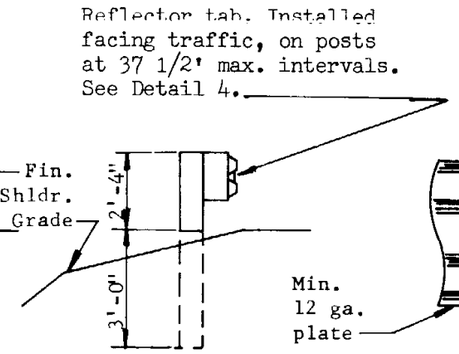

SIDE ELEVATION

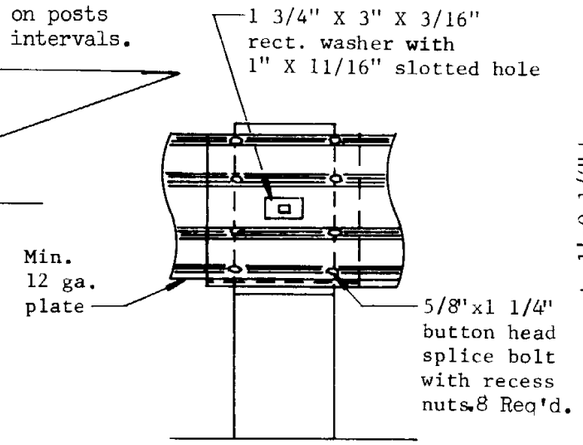

DETAIL NO. 1

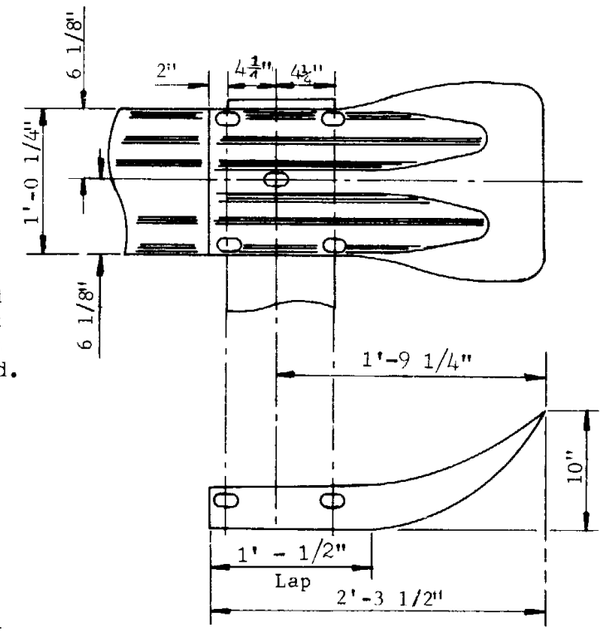

DETAIL NO. 2

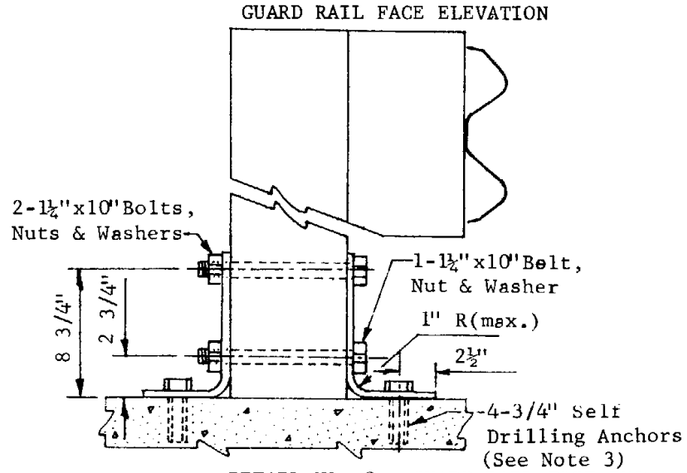

DETAIL NO. 3 - GUARD RAIL POST INSTALLATION ON STRUCTURES

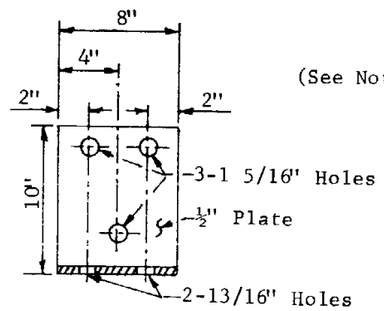

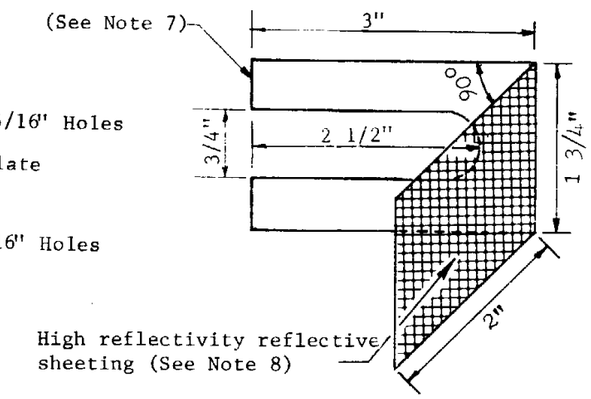

REFLECTOR TAB
DETAIL NO. 4

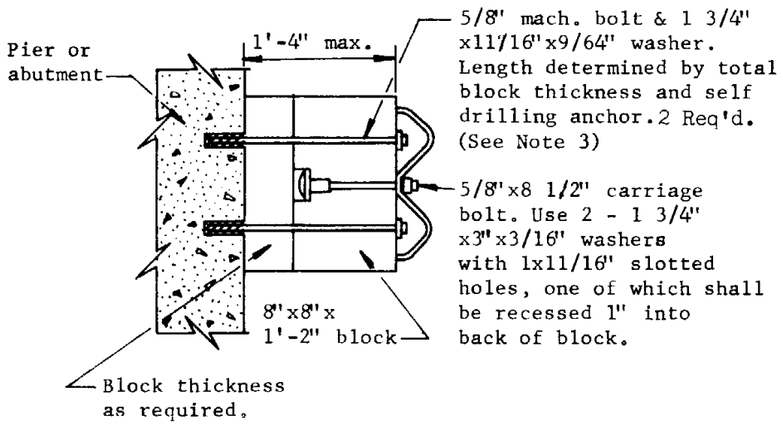

SECTION

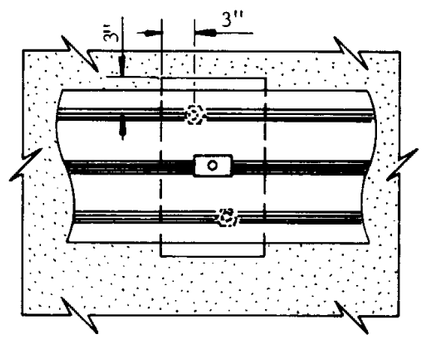

ELEVATION

DETAIL NO. 5 - ATTACHMENT OF GUARD RAIL TO STRUCTURES

GENERAL NOTES:

1. Posts and block shall be nominal 8" X 8" rough, unpainted and pressure treated after holes are drilled.
2. All guard rail, fittings and hardware shall be galvanized steel.
3. 3/4" self drilling anchors (Detail 3 & 5) shall have a minimum pullout strength of 1500# force in 2500 p.s.i. concrete minimum.
4. For additional details see Std C-10.02.
5. Reflectore tabs shall be either 3003-H14 Aluminum sheet, 0.063 inches thick or Galvanized steel with a minimum thickness of 0.164 inches.
6. Reflective sheeting shall be placed on side facing oncoming traffic.
7. Bend ends of slotted tabs up against mounting bolt after installation.
8. On reflector tab use high reflectivity silver reflective sheeting on the right hand side of all roadways. Use high reflectivity yellow reflective sheeting on the left hand side of divided one way roadways and left side of ramps.

DESIGN APPROVED	STATE OF ARIZONA DEPARTMENT OF TRANSPORTATION DIVISION OF HIGHWAYS STANDARD DRAWINGS	REV 11/74 5/77
APPROVED FOR DISTRIBUTION	GUARD RAIL SINGLE FACE DETAIL	DRAWING NO C-10.01

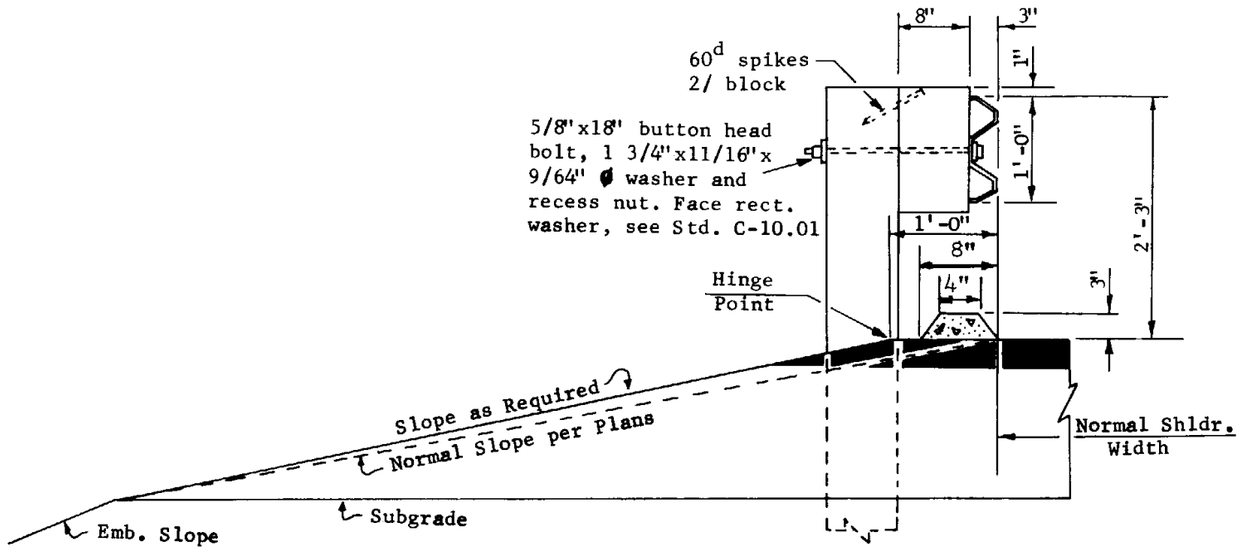

With Embankment Curb

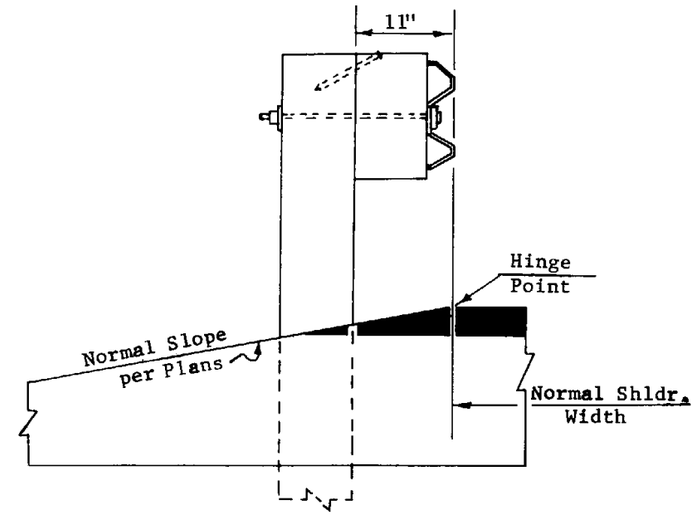

Without Embankment Curb

TYPE A INSTALLATION

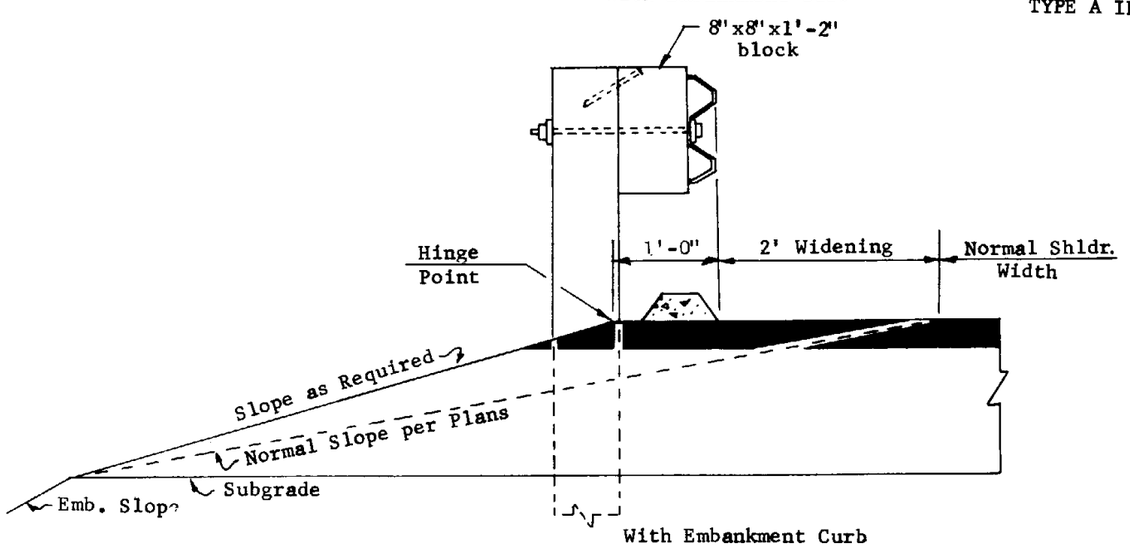

With Embankment Curb

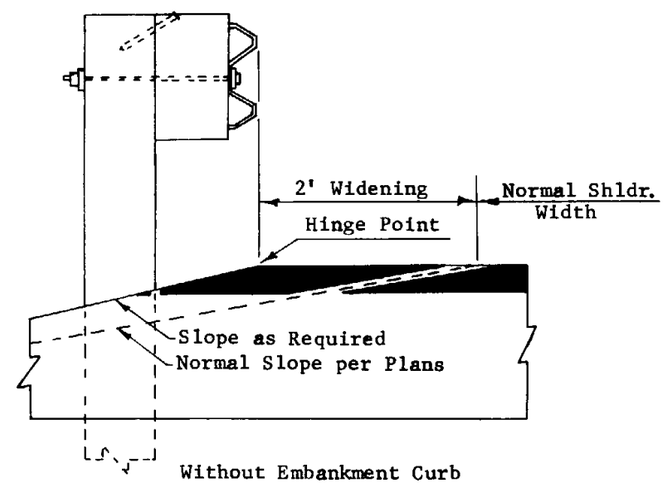

Without Embankment Curb

TYPE B INSTALLATION

GENERAL NOTES

Type A Installation: Guard rail face coincides with normal shoulder line.
Type B Installation: Guard rail face coincides with widened shoulder line.
See Std. C-10.01 for details not shown.
See Std. C-10.01.2 for Type B Installation plan views.
Concrete for the embankment curb shall be in accordance with Section 611 of Standard Specifications.

DESIGN APPROVED	STATE OF ARIZONA DEPARTMENT OF TRANSPORTATION DIVISION OF HIGHWAYS STANDARD DRAWINGS	REV. 5/78
APPROVED FOR DISTRIBUTION	GUARD RAIL, EMB. CURB & PVMT. WIDENING DETAILS - SECTION	DRAWING NO. C-10.01.1

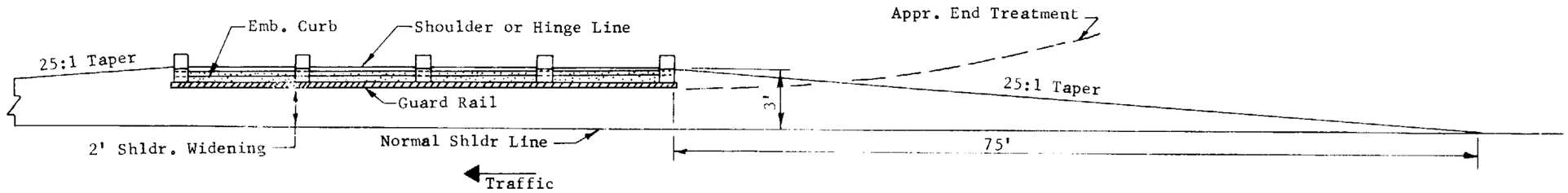

TYPE B INSTALLATION WITH EMB. CURB

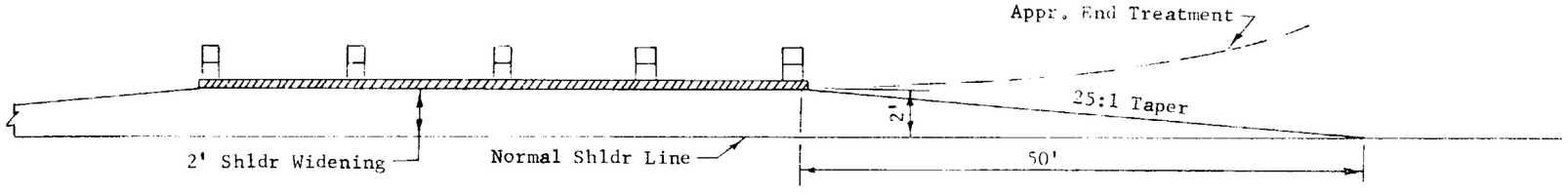

TYPE B INSTALLATION WITHOUT EMB. CURB

Note: No taper involved in Type A installation without embankment curb. Use a 25:1 taper for a Type A installation with embankment curb.

Note: For further single face guard rail, pavement widening and embankment curb details, see Stds. C-10.01 & C-10.01.1

GENERAL NOTES

Type A Installation: Guard rail face coincides with normal shoulder line.
Type B Installation: Guard rail face coincides with widened shoulder line.
All embankment curb shall be protected by guard rail. Guard rail, exclusive of flares, shall not begin or end within embankment curb length.

DESIGN APPROVED	STATE OF ARIZONA DEPARTMENT OF TRANSPORTATION DIVISION OF HIGHWAYS STANDARD DRAWINGS	REV.
APPROVED FOR DISTRIBUTION	GUARD RAIL, EMBANKMENT CURB & PVMT. WIDENING DETAILS - PLAN	DRAWING NO. C-10.01.2

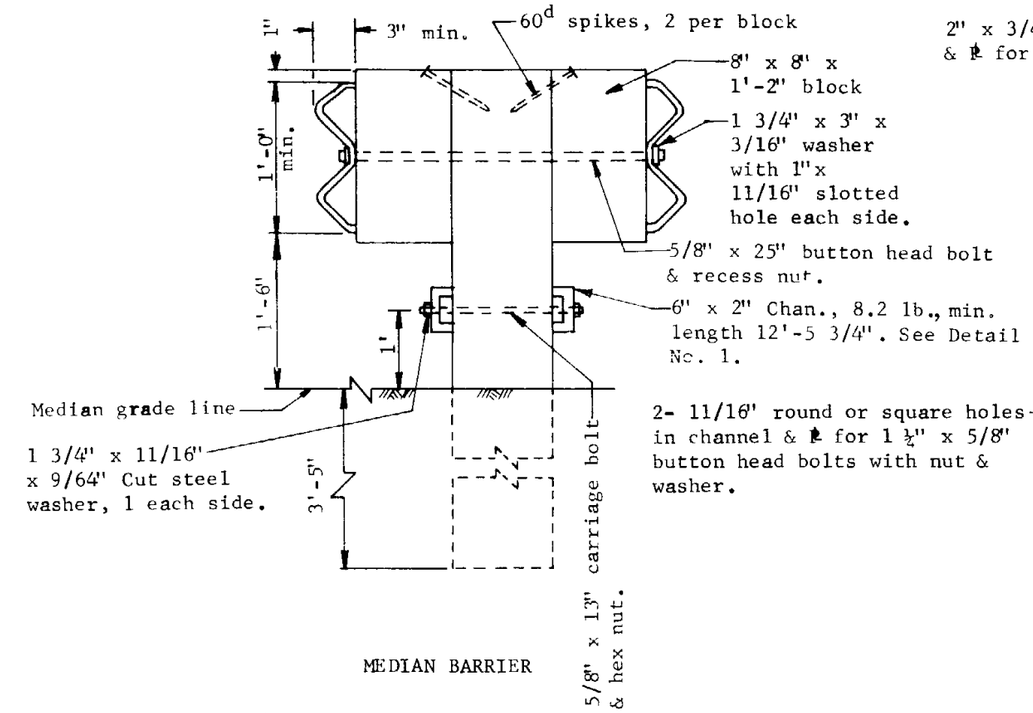

MEDIAN BARRIER

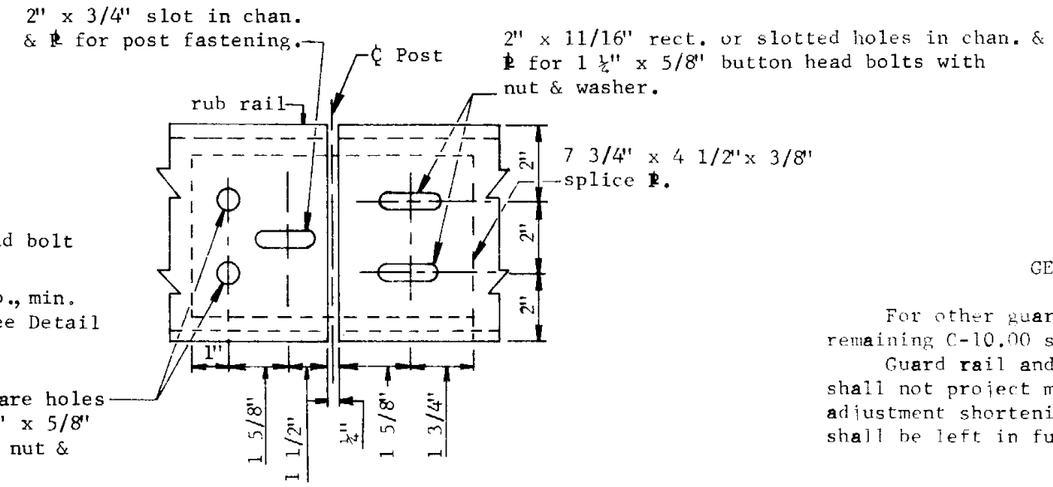

DETAIL NO. 1-RUB RAIL SPLICE
(Splice at post only)

GENERAL NOTES

For other guard rail details, see remaining C-10.00 series standards.

Guard rail and rub rail post bolts shall not project more than 1". If adjustment shortening is required, threads shall be left in functional condition.

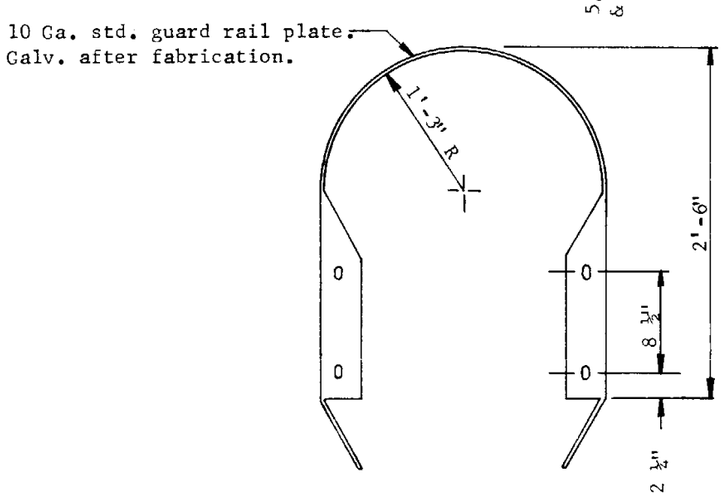

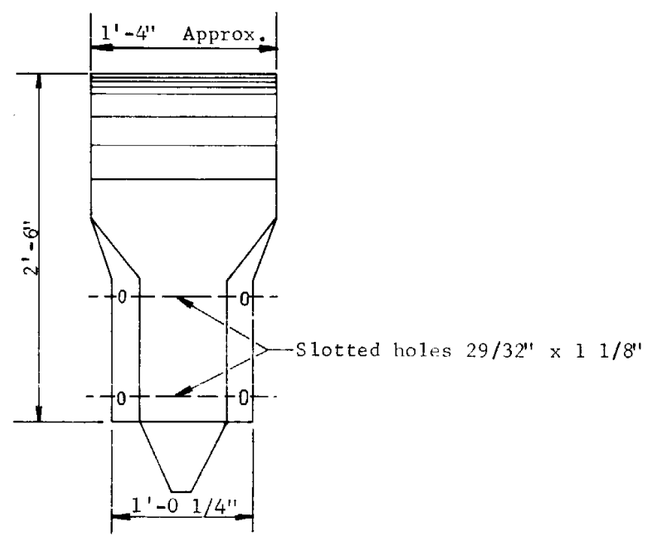

DETAIL NO. 2-BUFFER END SECTION

DESIGN APPROVED	STATE OF ARIZONA DEPARTMENT OF TRANSPORTATION DIVISION OF HIGHWAYS STANDARD DRAWINGS	REV. 6/74
APPROVED FOR DISTRIBUTION	GUARD RAIL, MISC. DETAILS	DRAWING NO. C-10.02

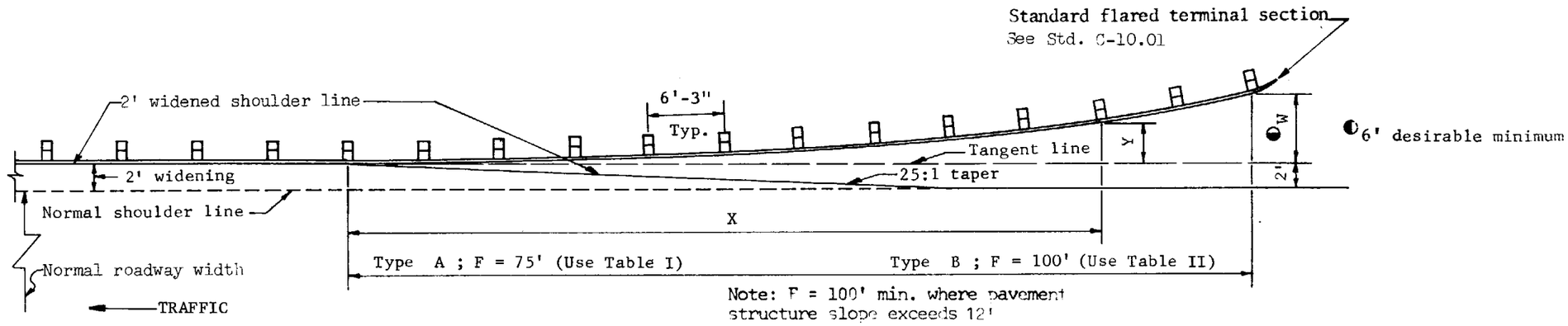

When the value of W and/or F is different than values shown in the tables, use the formula to compute applicable Y values.

Where necessary, dimension F may be increased to provide better alignment and grade.

Type A) Installation on normal shoulder line.

Type B) Installation on 2' widened roadway shoulder line.

Type B installation without emb. curb is shown. Type A installation without emb. curb is the same except that inside face of guard rail coincides with normal shoulder line and no pavement taper is involved.

For details of Type A & B installations with Emb. curb, see Std. C-10.01.1 and Std. C-10.01.2.

TABLE I

X	Y (Feet)			
	W			
	3'-0"	4'-0"	5'-0"	6'-0"
12'-6"	0.08	0.11	0.14	0.17
25'-0"	0.33	0.44	0.55	0.67
37'-6"	0.75	1.00	1.25	1.50
50'-0"	1.33	1.78	2.22	2.67
62'-6"	2.08	2.78	3.42	4.11
75'-0"	3.00	4.00	5.00	6.00

TABLE II

X	Y (Feet)					
	W					
	5'-0"	6'-0"	7'-0"	8'-0"	9'-0"	10'-0"
12'-6"	0.08	0.09	0.11	0.12	0.14	0.16
25'-0"	0.31	0.37	0.44	0.50	0.56	0.62
37'-6"	0.70	0.84	0.99	1.13	1.27	1.41
50'-0"	1.25	1.50	1.75	2.00	2.25	2.50
62'-6"	1.90	2.28	2.66	3.01	3.42	3.91
75'-0"	2.81	3.39	3.94	4.50	5.06	5.62
87'-6"	3.81	4.57	5.34	6.10	6.86	7.66
100'-0"	5.00	6.00	7.00	8.00	9.00	10.00

$Y = (W)X^2/F^2$ = Offset from Tangent line to guard rail.
W = Distance between Tangent line and desired location of end of guard rail.
F = Length of flared guard rail.
X = Distance from beginning of parabolic flare.

☐ indicates the preferred distance

DESIGN APPROVED	STATE OF ARIZONA DEPARTMENT OF TRANSPORTATION DIVISION OF HIGHWAYS STANDARD DRAWINGS	REV. 6/74
APPROVED FOR DISTRIBUTION	GUARD RAIL, APPROACH END TREATMENT	DRAWING NO. C-10.03

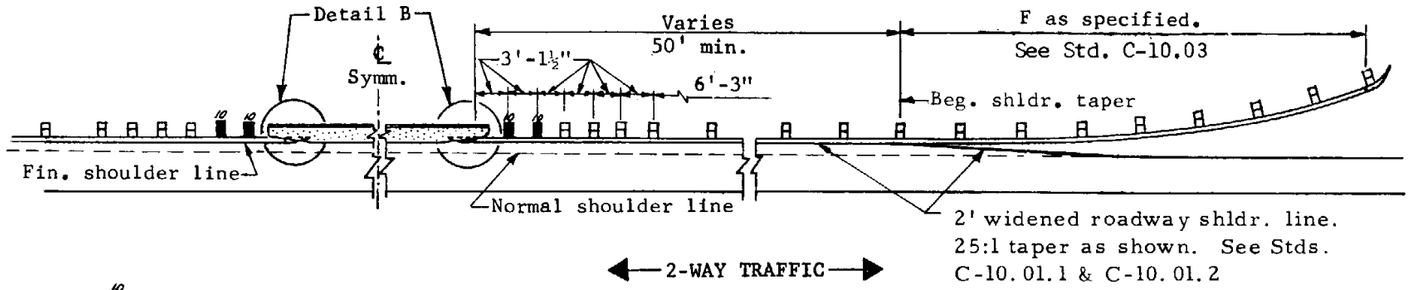

NOTE: ▮ Indicates 10"x10" post & block.

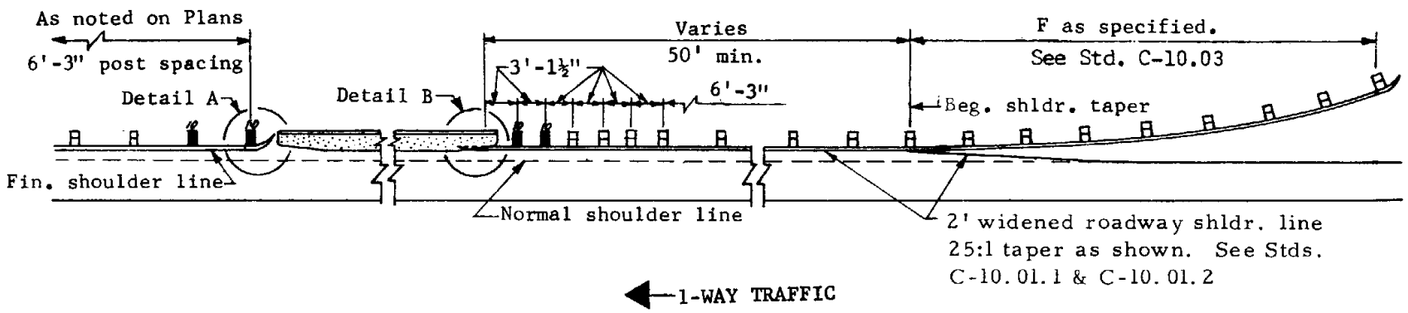

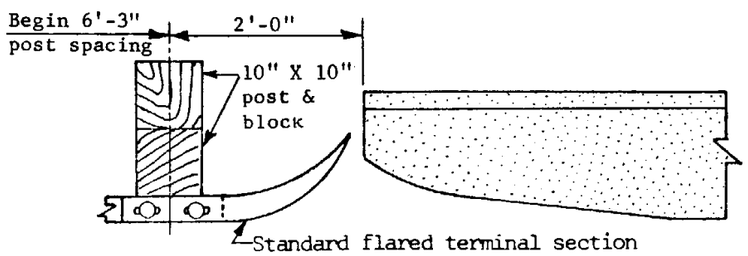

DETAIL A

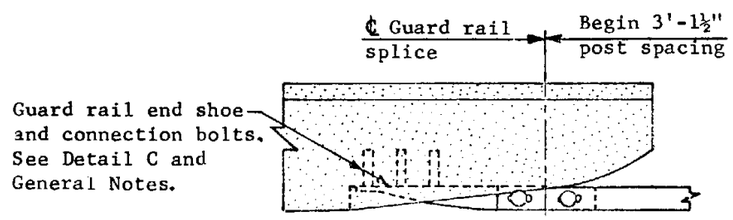

DETAIL B

GENERAL NOTES

Where necessary, dimension F may be increased to provide better alignment and grade.

Connect end shoe to dado with 4 - 7/8" high strength bolts with washers set in internally threaded tubular expansion anchors having an externally slit expansion element and a single cone expander. Tensile proof test load in 2500 p.s.i. concrete shall be 6500.lbs.

The guard rail end shoe shall be galvanized in accordance with A.S.T.M. specification A 123.

For construction details of guard rail attachment to bridge, see Plans.

Type A) Installation on normal shoulder line.

Type B) Installation on 2' widened roadway shoulder line.

Type B installation shown. Type A installation same except that inside face of guard rail coincides with normal shoulder line.

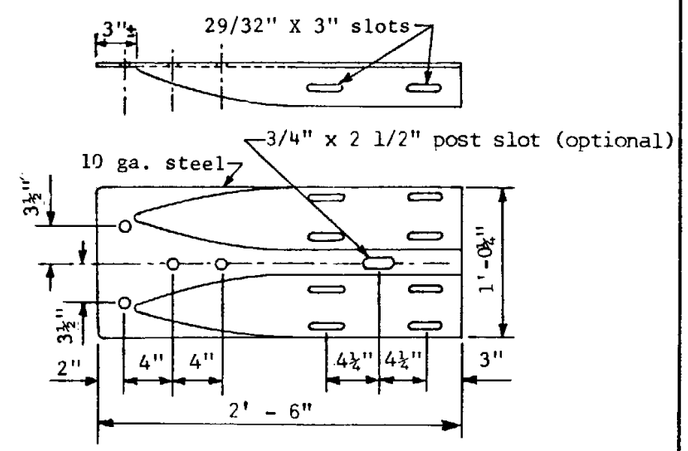

DETAIL C

DESIGN APPROVED	STATE OF ARIZONA DEPARTMENT OF TRANSPORTATION DIVISION OF HIGHWAYS STANDARD DRAWINGS	REV. 6/74
APPROVED FOR DISTRIBUTION	GUARD RAIL-STEEL BRIDGE APPROACH DETAILS	DRAWING NO. C-10.04

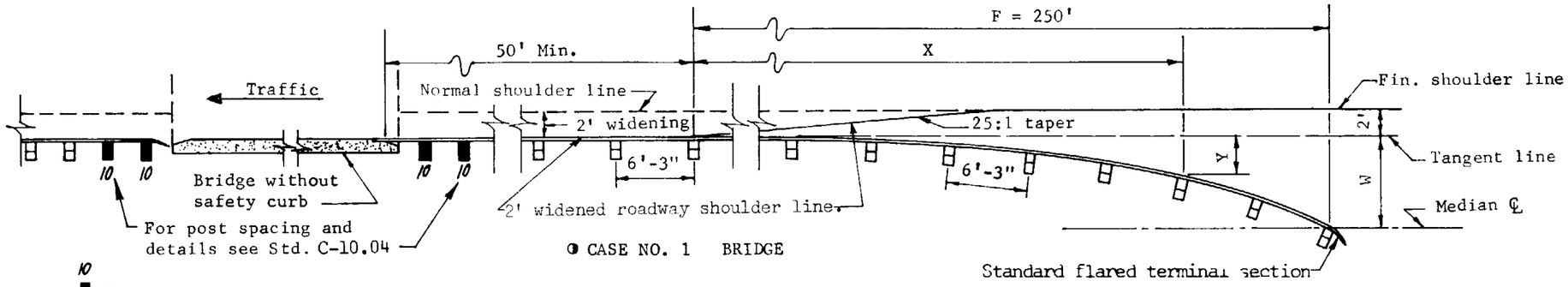

◑ CASE NO. 1 BRIDGE

NOTE: ▮ Indicates 10" x 10" post & block

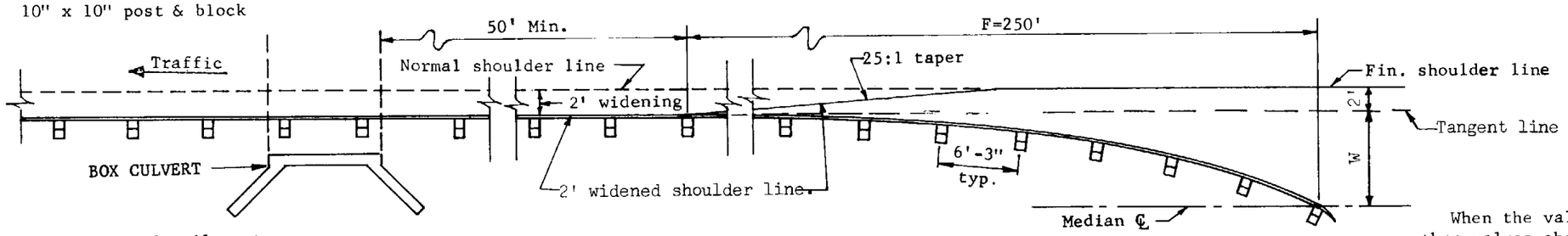

NOTE: For guard rail post installation on structures, see Std. C-10.01.

◑ CASE NO. 2 BOX CULVERT

X	Y(Feet) W				
	26'	30'	34'	38'	42'
12'-6"	.065	.075	.085	.095	.105
25'-0"	.260	.300	.340	.38	.42
37'-6"	.585	.675	.765	.86	.95
50'-0"	1.040	1.200	1.360	1.52	1.68
62'-6"	1.625	1.875	2.125	2.38	2.63
75'-0"	2.340	2.700	3.060	3.42	3.78
87'-6"	3.185	3.675	4.165	4.66	5.15
100'-0"	4.16	4.800	5.440	6.08	6.72
112'-6"	5.265	6.075	6.885	7.70	8.51
125'-0"	6.500	7.500	8.500	9.50	10.50
137'-6"	7.865	9.075	10.285	11.50	12.71
150'-0"	9.360	10.800	12.240	13.68	15.12
162'-6"	10.985	12.675	14.365	16.06	17.75
175'-0"	12.740	14.700	16.660	18.62	20.58
187'-6"	14.625	16.875	19.125	21.38	23.63
200'-0"	16.640	19.200	21.760	24.32	26.88
212'-6"	18.785	21.675	24.565	27.46	30.35
225'-0"	21.060	24.300	27.540	30.78	34.02
237'-6"	23.465	27.075	30.685	34.28	37.88
250'-0"	26.00	30.00	34.00	38.00	42.00

◑ One way roadway shown. For two way roadway, use symm. guard rail flare and fixed dado attachment at trailing end of bridge.

$Y = (W)X^2/F^2$ = Offset from Tangent line to guard rail.
W = Distance between Tangent line and median center line.
F = Length of flared portion of guard rail.
X = Distance from beginning of parabolic flare to any 12'-6" multiple of parabolic flare.

NOTE: See also, Plans Div. Design Memorandum 74-1.

GENERAL NOTES

When the value of W and/or F is different than values shown in the table, use the formula to compute the applicable Y values.

For construction details of guard rail attachment to bridge, see Std. C-10.04 and Plans.

Where necessary, dimension F may be increased to provide better alignment and grade.

Type A) Installation on normal shoulder line.

Type B) Installation on 2' widened roadway shoulder line.

Type B installation without emb. curb shown. Type A installation same except that inside face of guard rail coincides with normal shoulder line.

For details of Type B installation with emb. curb, see Stds. C-10.01.1 and C-10.01.2

DESIGN APPROVED

APPROVED FOR DISTRIBUTION

STATE OF ARIZONA
DEPARTMENT OF TRANSPORTATION
DIVISION OF HIGHWAYS
STANDARD DRAWINGS

REV. 6/74

GUARD RAIL
FLARE TO MEDIAN

DRAWING NO. C-10.05

* Min. Std. approach end treatment for type B installation

** Std. median flare

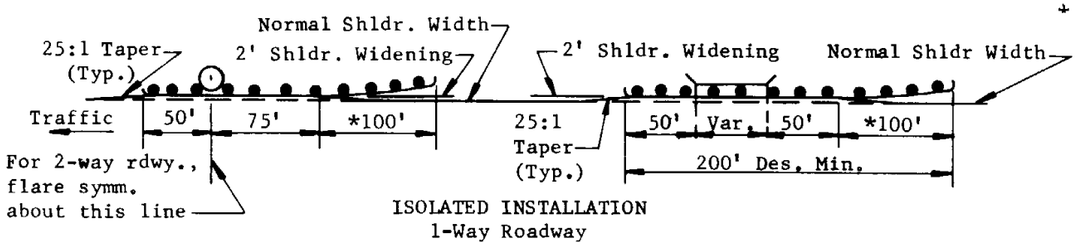

ISOLATED INSTALLATION
1-Way Roadway

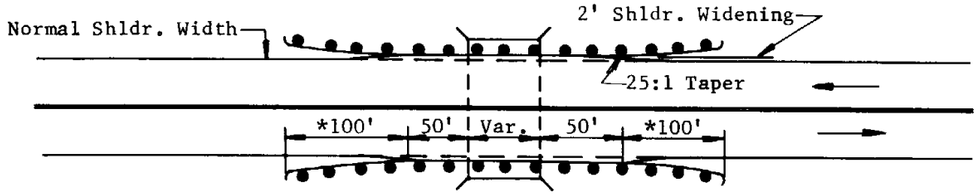

2-WAY ROADWAY OBSTRUCTION

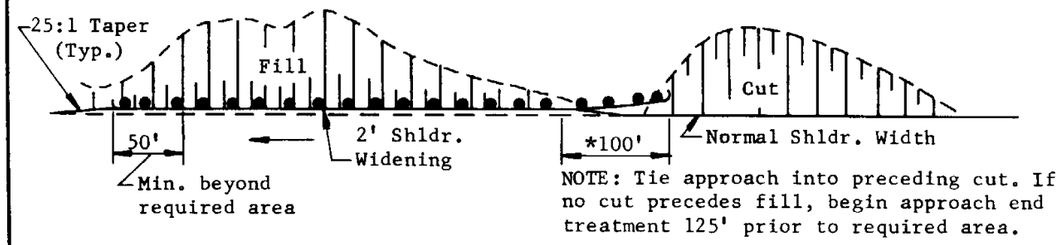

NOTE: Tie approach into preceding cut. If no cut precedes fill, begin approach end treatment 125' prior to required area.

FILL PROTECTION

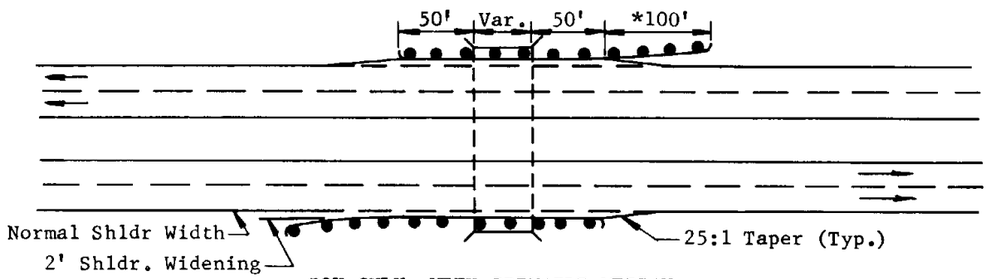

BOX CULV. WITH DRIVABLE MEDIAN

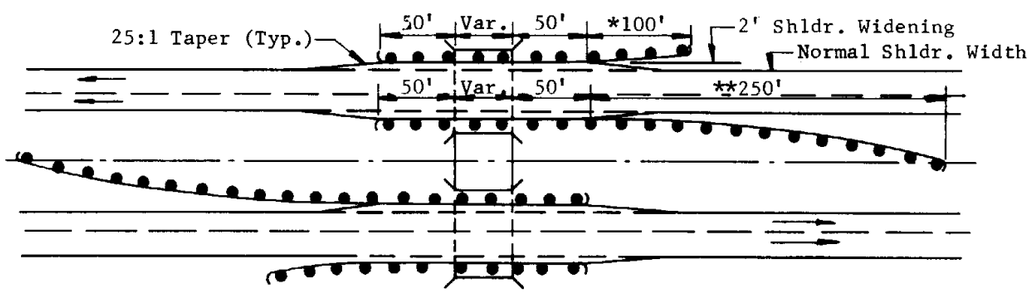

BOX CULVERT WITHOUT DRIVABLE MEDIAN

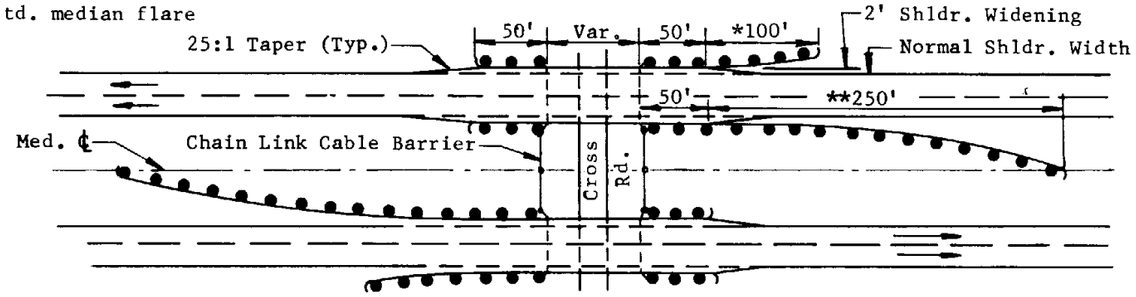

BRIDGE STRUCTURE WITH CROSS ROAD

⊗ If distance from face of pier to face of guard rail is less than 2', attach guard rail to pier. See Std. C-10.01

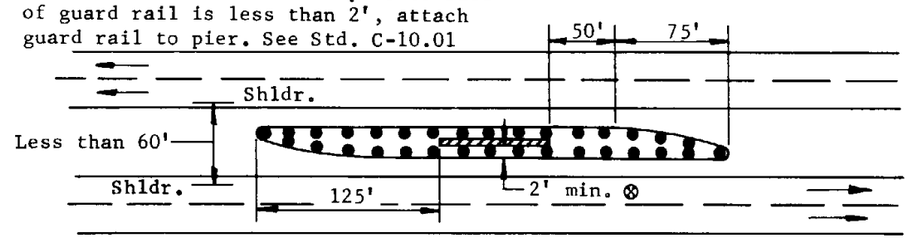

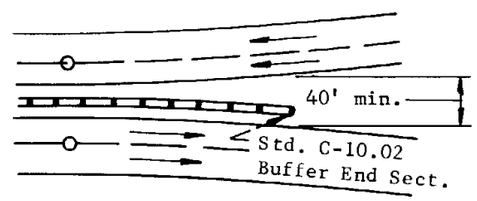

MEDIAN BARRIER TERMINUS

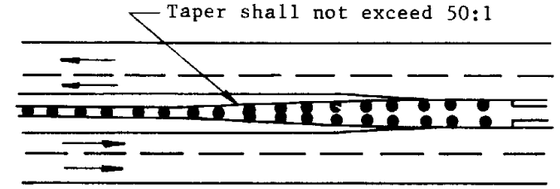

BARRIER TRANSITION AT OVERPASS

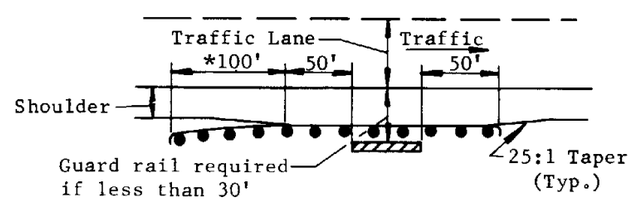

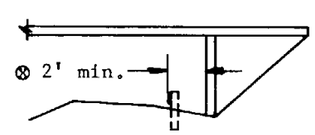

PIER ABUTMENT OR SIGN BASE
RIGHT SIDE OF ROADWAY

GENERAL NOTES

This standard does not establish warrants for guard rail installation.

Max. post spacing shall be 6'-3". See Stds. C-10.01 through C-10.12 for all installation details.

See also Plans Div. Design Memo No. 74-1

DESIGN APPROVED	STATE OF ARIZONA DEPARTMENT OF TRANSPORTATION DIVISION OF HIGHWAYS STANDARD DRAWINGS	REV. 6/74
APPROVED FOR DISTRIBUTION	GUARD RAIL TYPICAL INSTALLATIONS	DRAWING NO. C-10.06

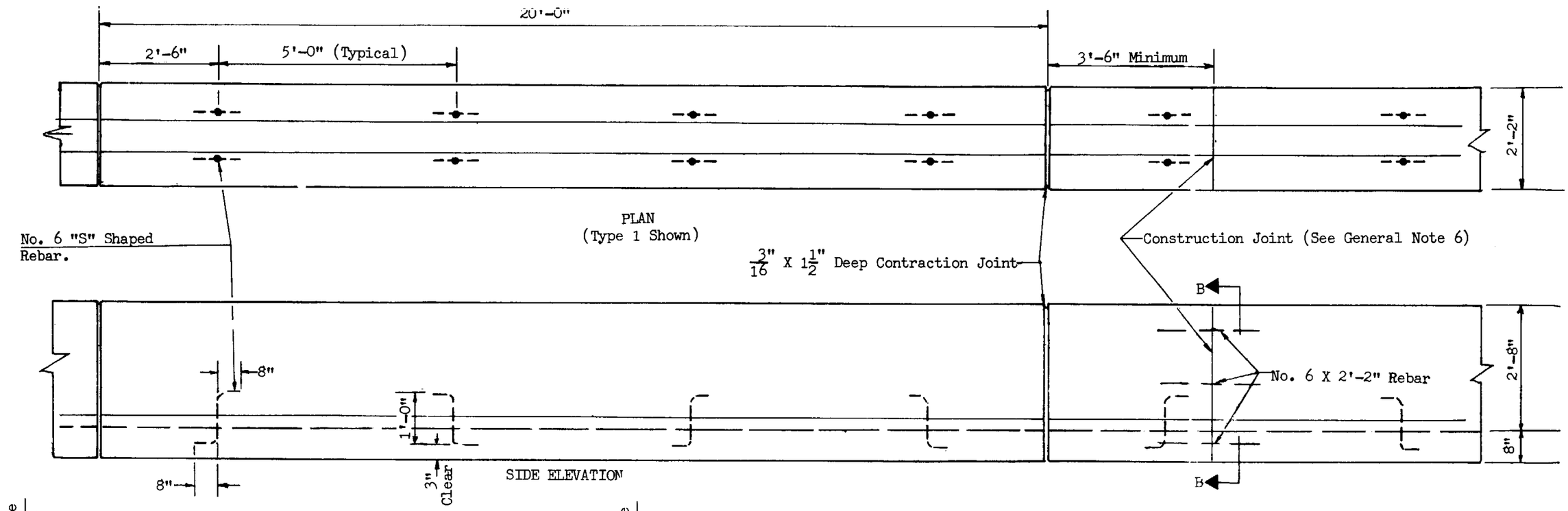

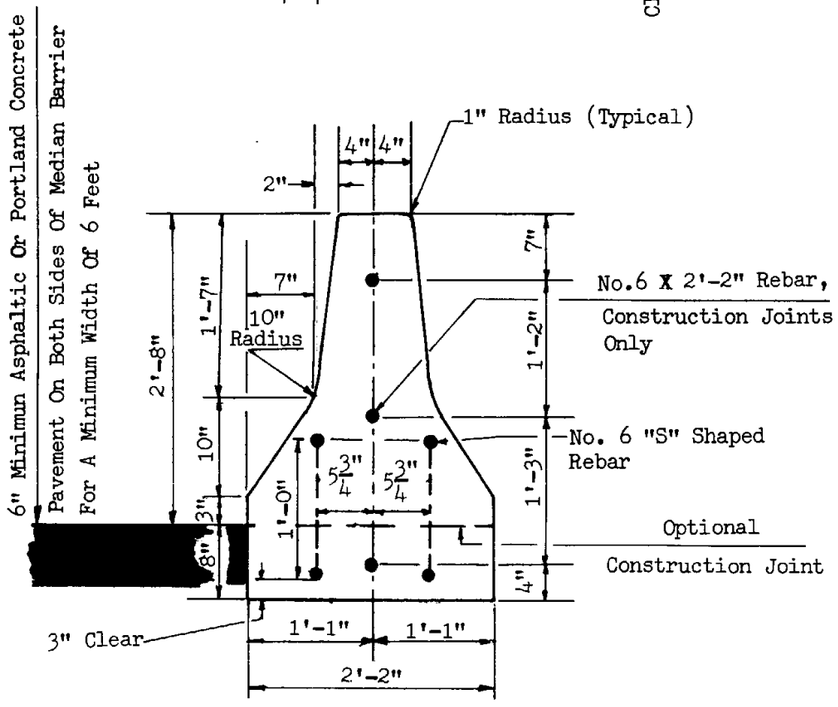

TYPE 1

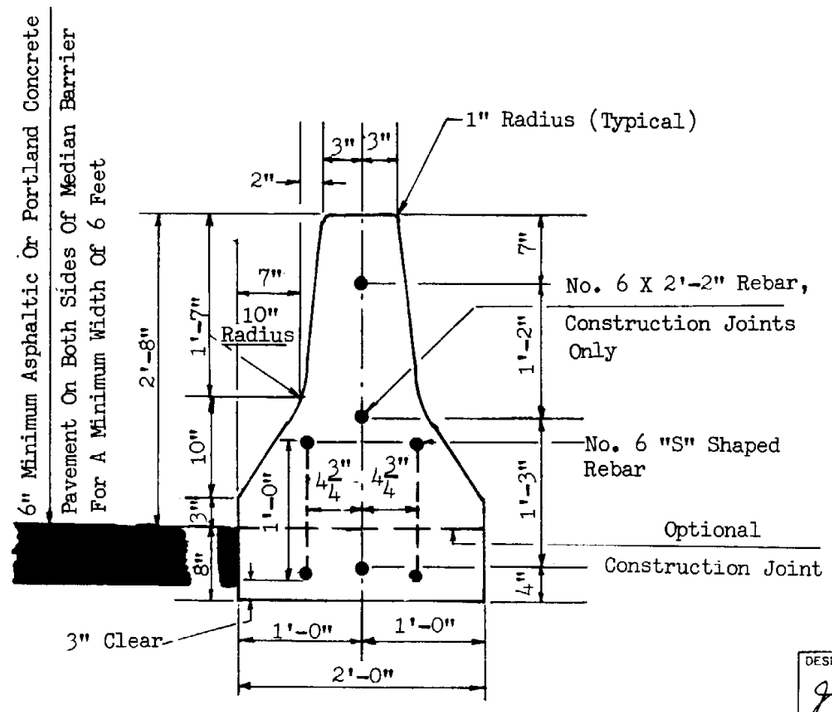

TYPE 2

SECTION B-B

GENERAL NOTES:

1. Median Barrier shall be constructed by the slip form or extrusion method.
2. When obstacles are encountered which prevent the use of slip form equipment, the closure shall be accomplished by the use of stationary forms.
3. Unless otherwise specified on project plans, the Type 1 Median Barrier shall be constructed.
4. Concrete shall be Class S, design strength f'_c = 3000 p.s.i.
5. If the footing and barrier are cast monolithlicly No. 6 "S" shaped rebars and optional construction joint will not be required.
6. Construction joints shall be kept to a minimum. Joints shall be finished with tool having a 1/4 inch radius.
7. Contraction joints shall be sealed with an approved joint sealant.

DESIGN APPROVED	STATE OF ARIZONA DEPARTMENT OF TRANSPORTATION DIVISION OF HIGHWAYS STANDARD DRAWINGS	REV. 6/74 2/78
APPROVED FOR DISTRIBUTION	MEDAIN BARRIER, CAST IN PLACE, SLIP FORM	DRAWING NO. C-10.08

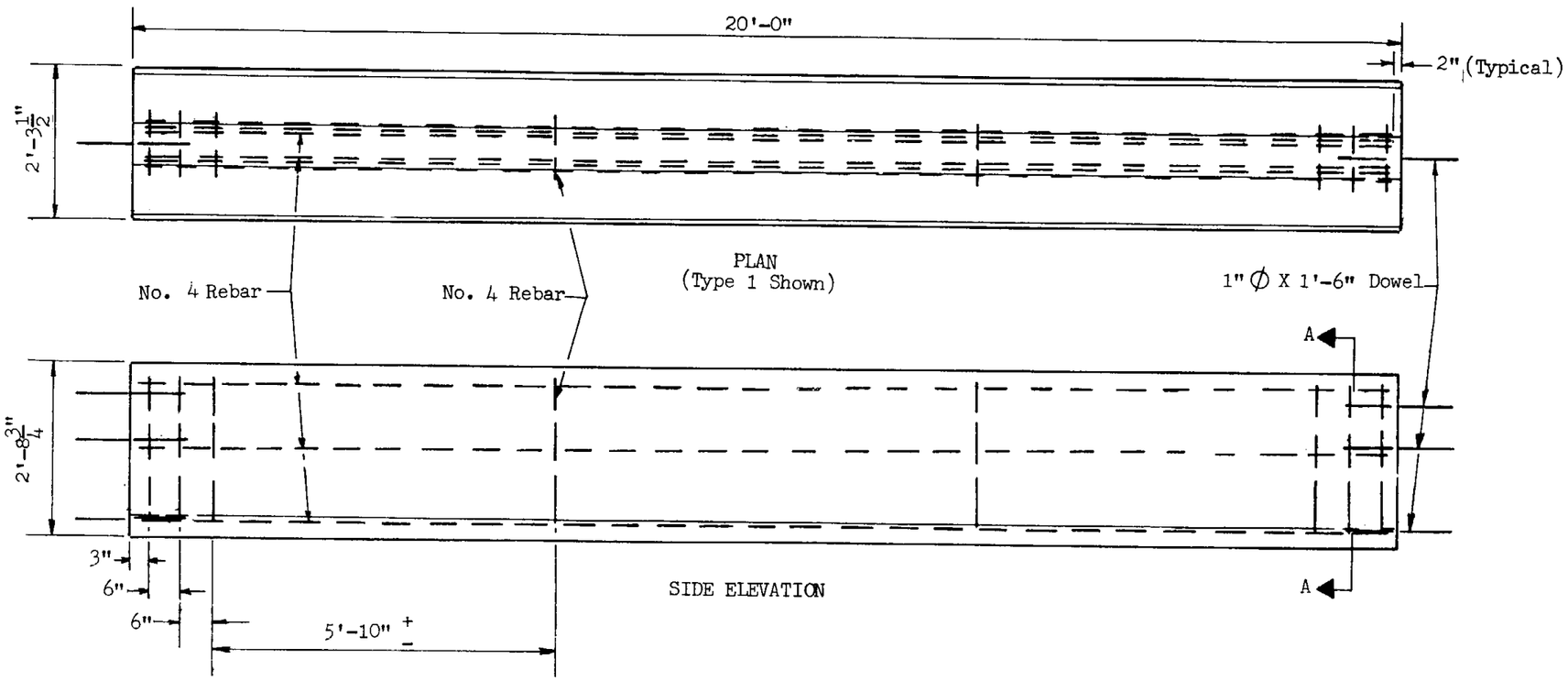

GENERAL NOTES:

1. Concrete shall be Class S, design strength f'_c = 3000 p.s.i.
2. Unless otherwise specified on project plans, the Type 1 Median Barrier shall be constructed.
3. Median Barrier shall be placed upon either Asphaltic or Portland Cement Concrete Pavement.
4. Pavement thickness adjacent to Median Barrier shall be 3/4 inch minimum.
5. Joints shall be finished with a tool having a 1/4 inch radius.
6. This standard shall not be used when an individual run consists of less than five 20 foot sections.

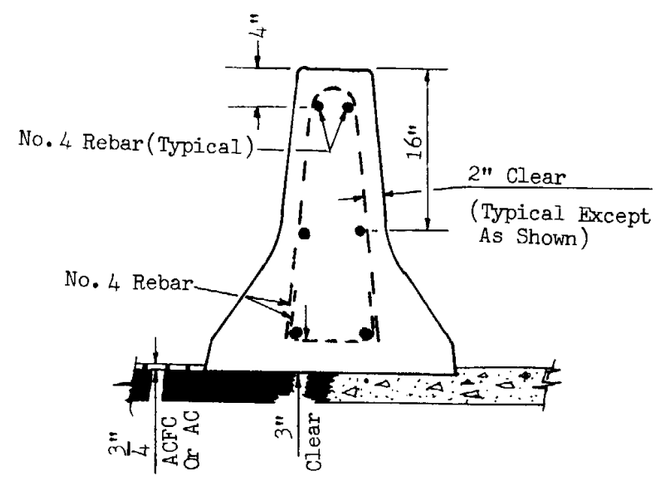

SECTION A-A

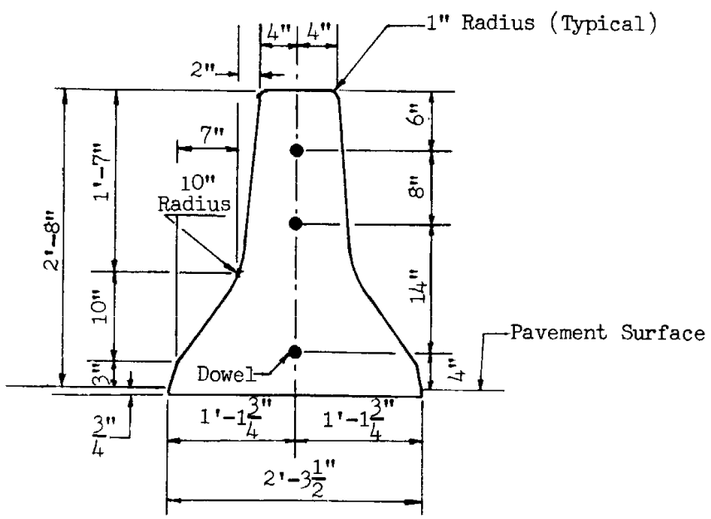

TYPE 1

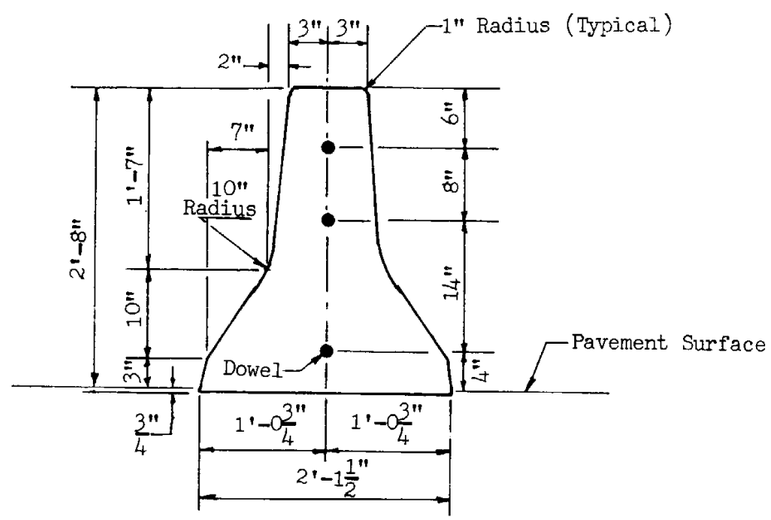

TYPE 2

END ELEVATION

DESIGN APPROVED [signature]	STATE OF ARIZONA DEPARTMENT OF TRANSPORTATION DIVISION OF HIGHWAYS STANDARD DRAWINGS	REV. 6/74 2/78
APPROVED FOR DISTRIBUTION [signature]	MEDIAN BARRIER, CAST IN PLACE, FIXED FORM	DRAWING NO. C-10.08.1

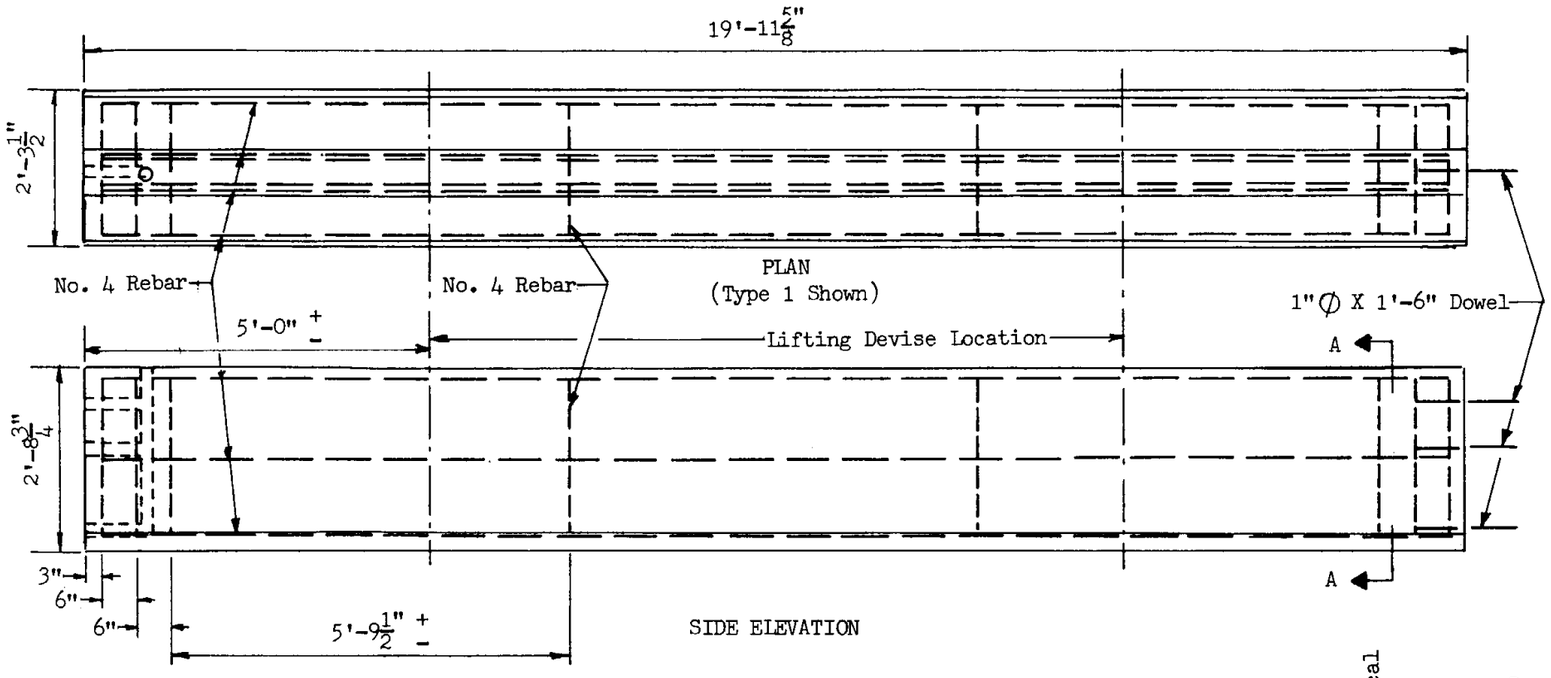

GENERAL NOTES:

1. Concrete shall be Class S, design strength f'_c = 3000 p.s.i.
2. Unless otherwise specified on the project plans, the Type 1 Median Barrier shall be constructed.
3. Median Barrier shall be placed upon either Asphaltic or Portland Cement Concrete Pavement.
4. Pavement thickness adjacent to Median Barrier shall be 3/4 inch minimum.
5. The Median Barrier shall be placed upon a bed of grout in order to provide a uniform bearing.
6. Doweled joints shall be grouted under pressure until all of the openings and the joint are filled.
7. This standard shall not be used when an individual run consists of less than five 20 foot sections.

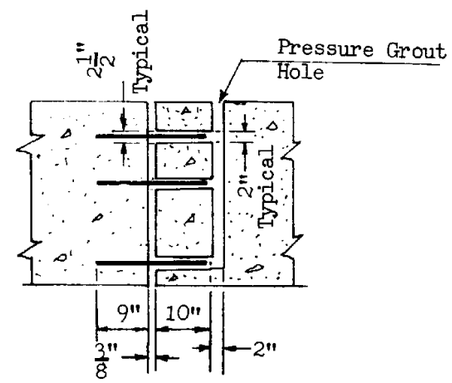

SECTION THROUGH JOINT

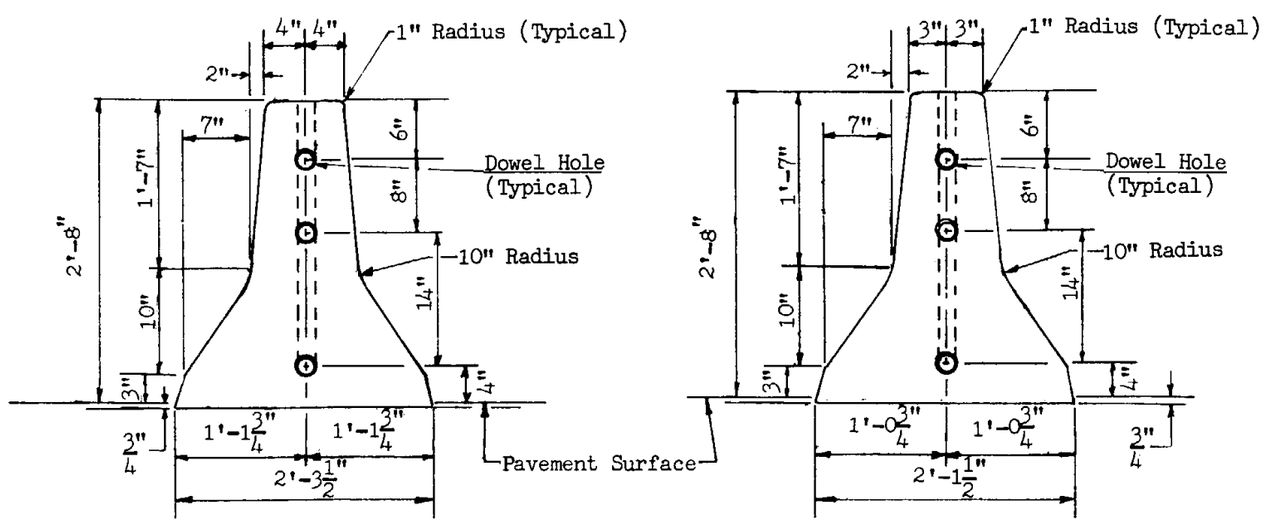

TYPE 1

TYPE 2

END ELEVATION

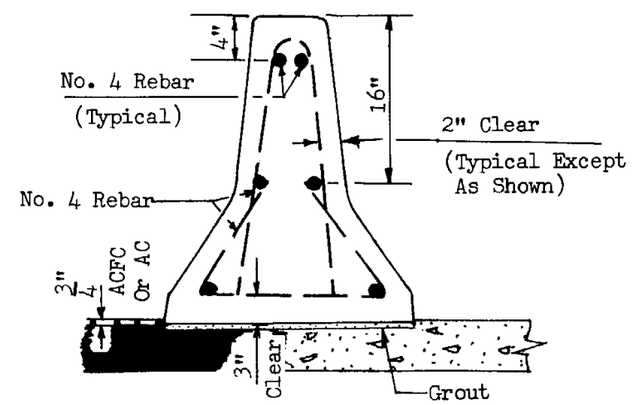

SECTION A-A

DESIGN APPROVED	STATE OF ARIZONA DEPARTMENT OF TRANSPORTATION DIVISION OF HIGHWAYS STANDARD DRAWINGS	REV. 6/74 2/78
APPROVED FOR DISTRIBUTION	MEDIAN BARRIER, PRECAST	DRAWING NO. C-10.08.2

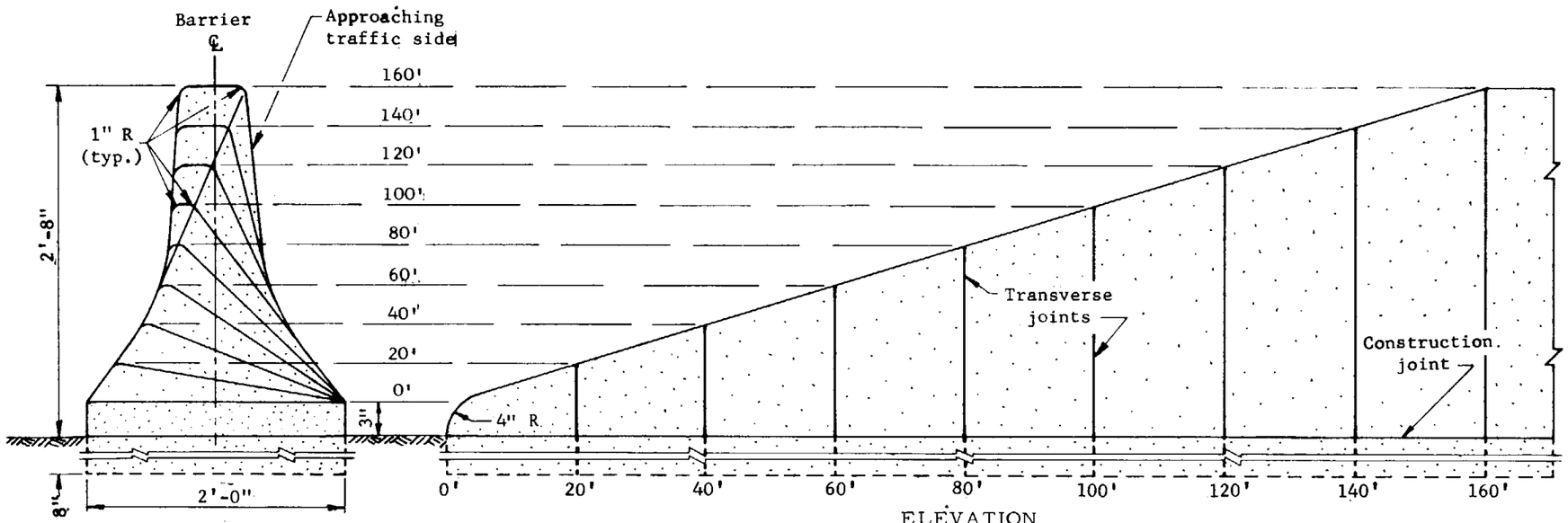

END VIEW

ELEVATION

TRANSITION AT TERMINALS

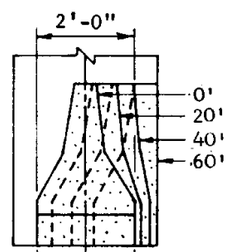

SECTION A-A

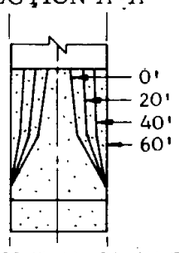

SECTION B-B; 2'-0" PIER

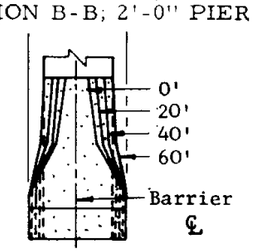

SECTION B-B; 1'-6" PIER

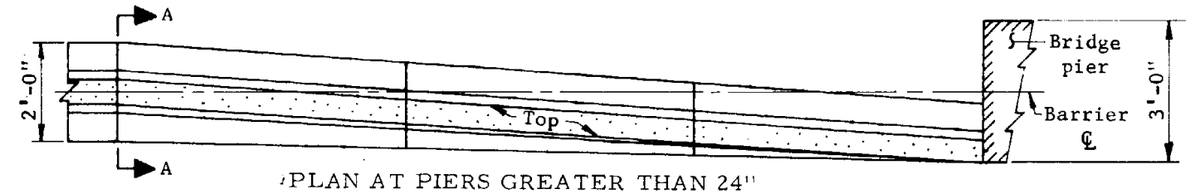

PLAN AT PIERS GREATER THAN 24"

Symm. 20: 1 base width taper for 1'-6" pier

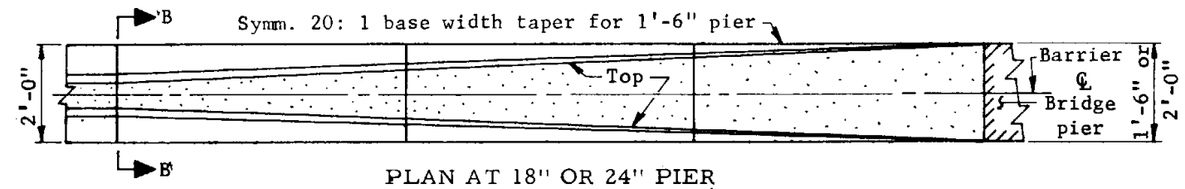

PLAN AT 18" OR 24" PIER

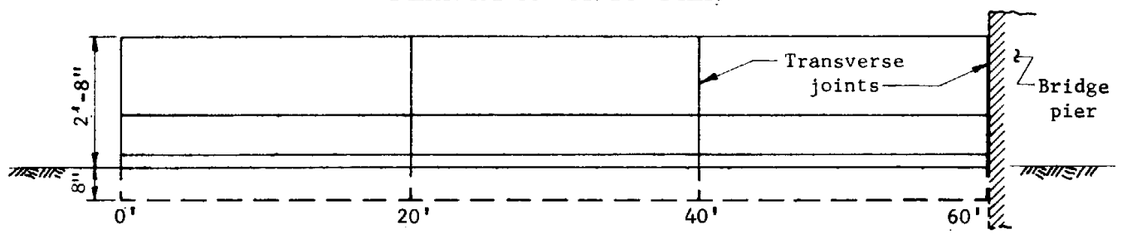

ELEVATION

TYPICAL TRANSITION AT BRIDGE PIERS

GENERAL NOTES

All concrete shall be Class A.

Faces of median barrier shall provide a smooth transition.

For median barrier construction details, see Std. C-10.08.

DESIGN APPROVED	STATE OF ARIZONA DEPARTMENT OF TRANSPORTATION DIVISION OF HIGHWAYS STANDARD DRAWINGS	REV. 6/74
APPROVED FOR DISTRIBUTION	BARRIER, MEDIAN, CIP CONC., TRANSITION DETAILS	DRAWING NO. C-10.09

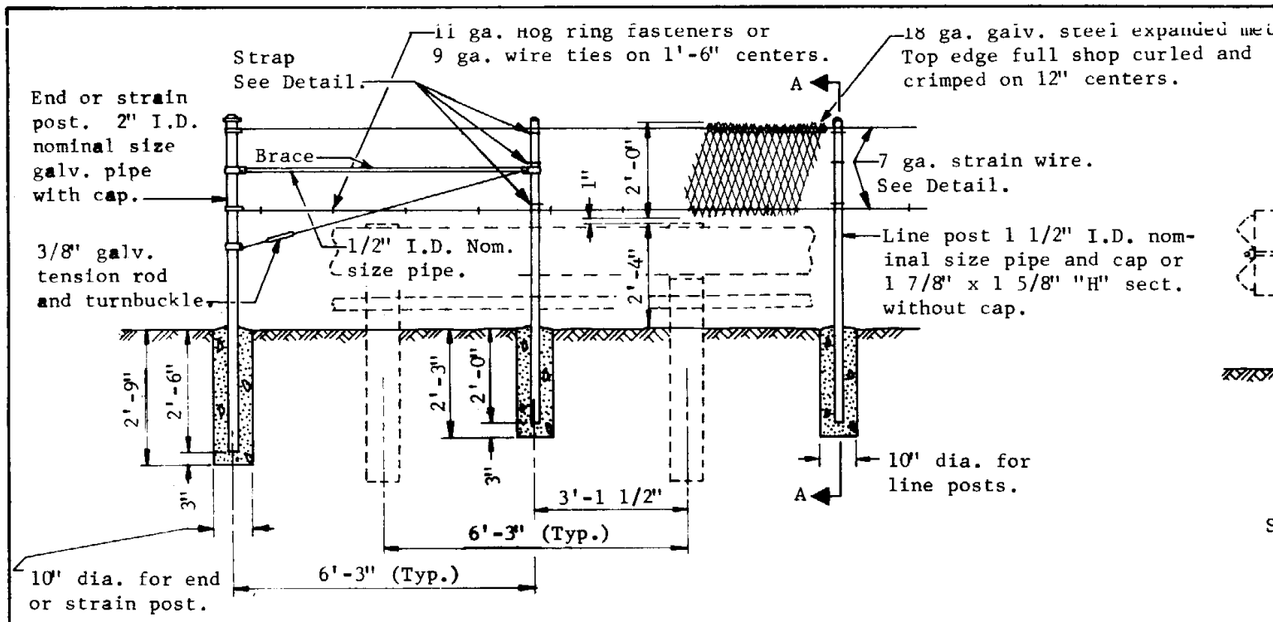

EXPANDED METAL GLARE SCREEN

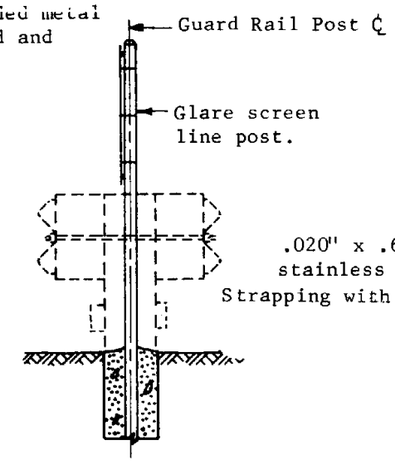

SECTION A-A

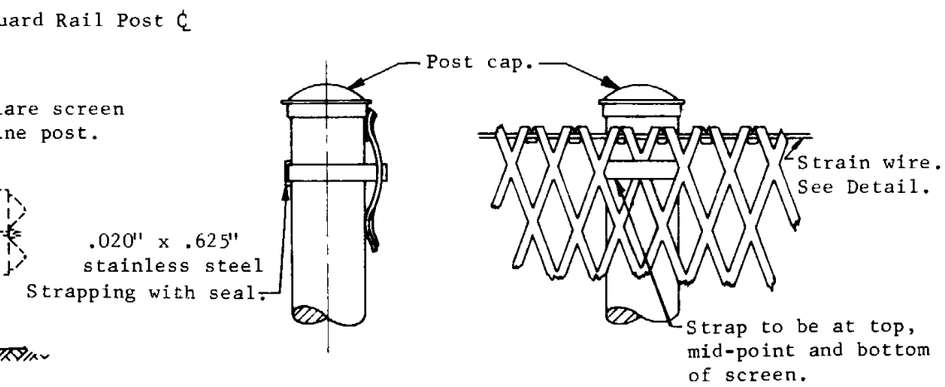

EXPANDED METAL POST STRAPPING DETAIL

NOTE: End posts shall be braced with brace and tension rod one side only as shown. Place intermediate strain posts at 500' max. intervals, between end posts, with brace and tension rod each side.

GENERAL NOTES

For guard rail details, see appropriate guard rail standard.

There shall be no connection made between the glare screen and the guard rail.

Galvanizing shall be in accordance with section 711 of A.H.D. Standard Specifications.

All pipe posts shall be capped.

Concrete may be job mix concrete of not less than 5 sacks per cu. yd.

Expanded metal shall be 18 ga., 0.250" strand width with 1.33" x 4.0" bridge dimensions on tangents and 0.188" strand width with 0.93" x 2.0" bridge dimensions on curves.

Overlaps shall be one full diamond and shall occur at posts only.

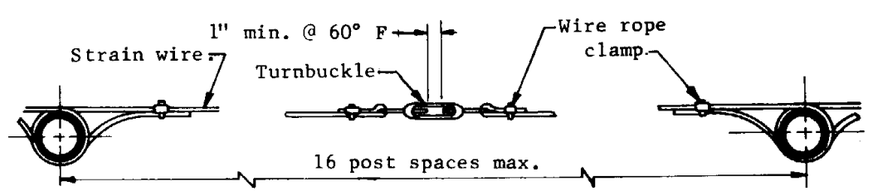

STRAIN WIRE DETAIL

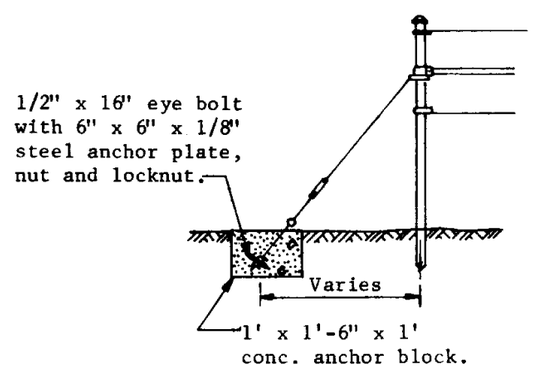

ALTERNATE END POST TENSION ROD LOCATION

DESIGN APPROVED	STATE OF ARIZONA DEPARTMENT OF TRANSPORTATION DIVISION OF HIGHWAYS STANDARD DRAWINGS	REV 6/74
APPROVED FOR DISTRIBUTION	GLARE SCREEN, DOUBLE FACE GUARD RAIL	DRAWING NO. C-10.10

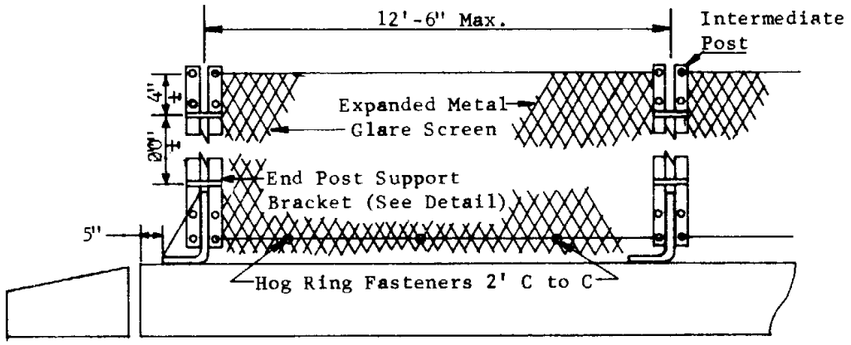

MEDIAN BARRIER GLARE SCREEN

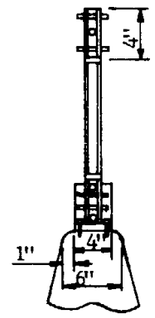

SECTION THRU BARRIER*

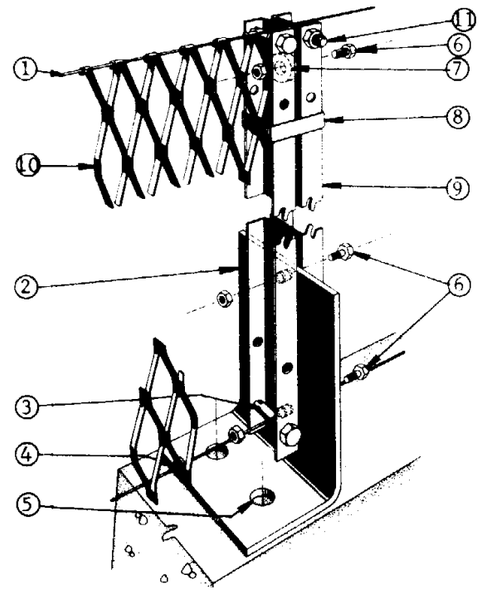

TYPICAL GLARE SCREEN INSTALLATION

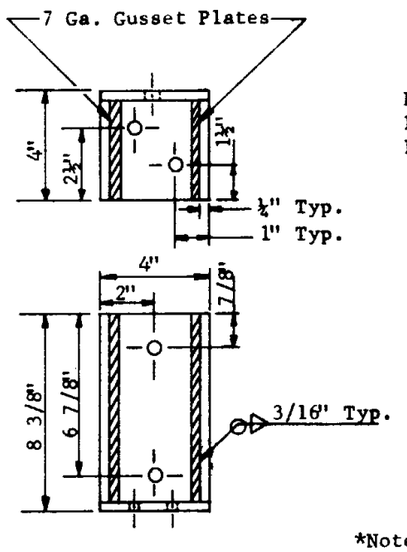

POST SUPPORT BRACKET

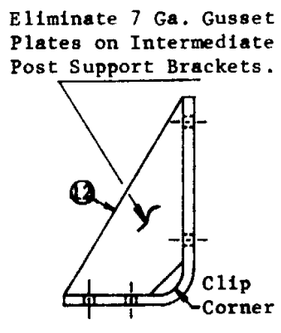

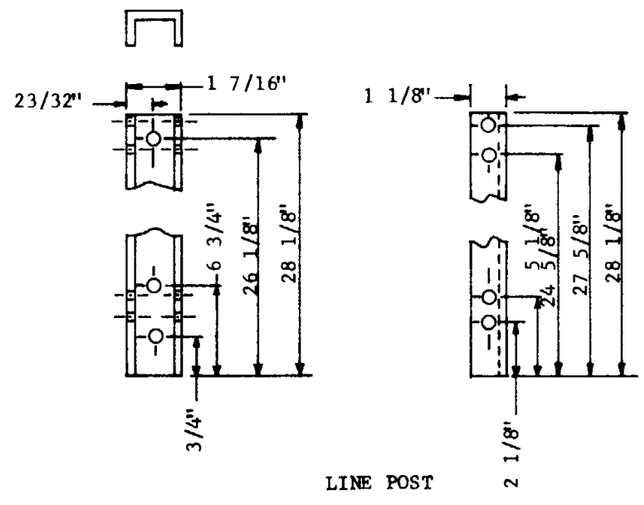

LINE POST

*Note: Contractor may drill holes or cast holes to set anchor bolt required to anchor plate of glare screen post assembly to the median barrier. If cast hole is used, seat bolt in sulfur, epoxy or other material approved by the Engineer.

GENERAL NOTES

1. Tension Wire: AWG No. 9 (0.148"Ø) Galv. to conform to ASTM-A-116 Class "2". Wind wire approximately 3 times around ferrule.
2. ¼" Support Bracket: (0.250") ASTM-A-569 Grade "C" Galv. ASTM-A-153 Class "B-1" (After Fabrication)
3. Ferrule for Tension Take-up: ASTM-A-569 Grade "A" 9/16" ID x 1 3/16" long x 14 Ga. with 3/16" notch in ends. ASTM-A-153 Class "B-3" Galv. (After Fabrication)
4. Hog Ring: AWG No. 12 (0.105"Ø) ASTM-A-116 Class "2" Galv. Fasten Glare Barrier to Bottom Tension Wire Spaced Approx. 2' Apart.
5. ½" Drilled-in Expansion Anchors: 5/8" Diam. hole-½" hex bolt ASTM-A-307 Galv. ASTM-153 Class "C" (Phillips Red Head or equal). (See Detail for Alternate)
6. ½"Ø x 1" Hex Head Bolt with Hex Nut: ASTM-153 Class "C" Hot dip Galv. ASTM-A-307.
7. ½" x 1" Plate Washer Spacer: 9/16" dia. hole, galv. to conform to ASTM-A-153.
8. Stainless Steel Strap & Seal shall conform to ASTM-A-176 Type 430. Straps 0.020" x 0.625" No. 1 or 2 finish. Seals 0.020" x 0.125" (Single Crimp)
9. Line Post: ASTM-A-569 B/B Channels, 1 7/16" x 1 1/8" x 11 Ga. Galv. ASTM-A-153, Class "B-2" (After Fabrication)
10. Glare Screen shall be expanded metal of 18 Ga. ASTM-A-525 with 0.250" strand width, and 1.333" x 4.0" C to C of Bridges. Top edge to be shop curled, and crimped on 12" centers. The galv. steel shall be 0.2 mil prime coat prepared according to Mil. Spec. TT-C-490. Prime coat shall be baked on zinc chromate epoxy dry film. Finish coat shall be 1.0 mil baked polyester enamel by electrostatic spray. For finish color see Plans.
11. ½" x 2" Ø Hex Head Cap Screw and Hex Nut with 3/16" hole drilled through stem.
12. Gusset: ASTM-A-569 7 Ga.
13. All Intermediate Post Support Brackets shall face in same direction. End Panel Support Brackets shall face as shown.

DESIGN APPROVED	STATE OF ARIZONA DEPARTMENT OF TRANSPORTATION DIVISION OF HIGHWAYS STANDARD DRAWINGS	REV.
APPROVED FOR DISTRIBUTION	GLARE SCREEN, TYPE "P", CONC. MEDIAN BARRIER	DRAWING NO. C-10.10.1

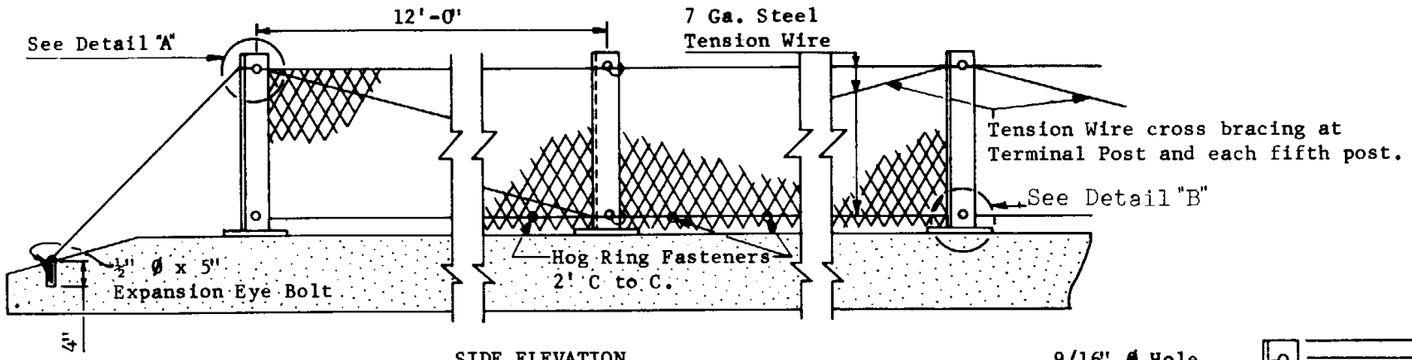

SIDE ELEVATION

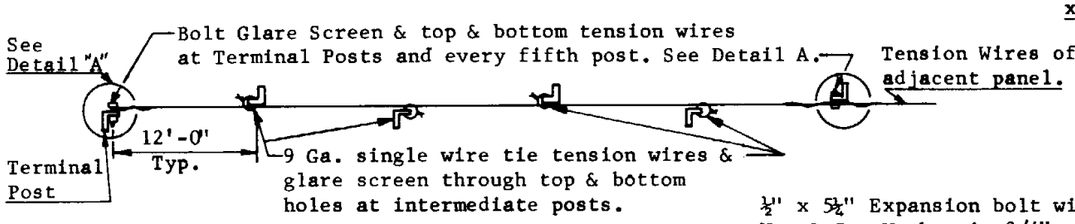

FASTENER LOCATIONS

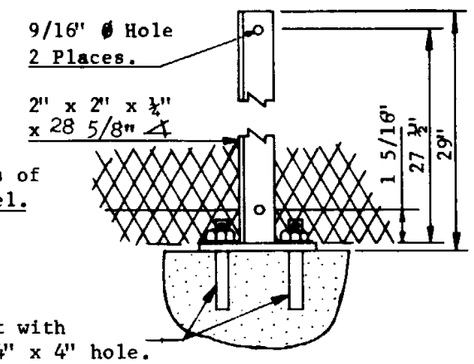

DETAIL "B"
Elevation

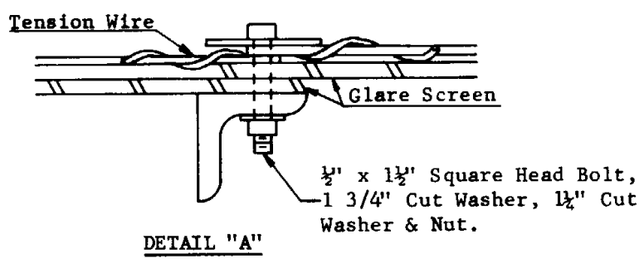

DETAIL "A"

Splices allowed in glare screen at
posts only, with 1-full diamond overlap.

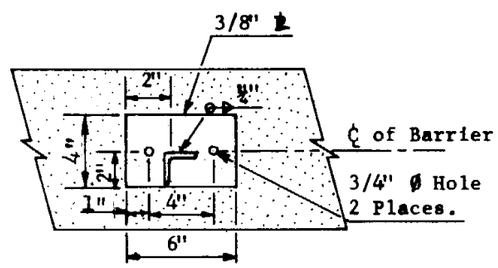

DETAIL "B"
Plan

GENERAL NOTES

Posts shall be 12'-0" C to C. Structural steel shall conform to A.S.T.M. A-36.

Top edge of glare screen shall be fully shop crimped. Tension wire shall pass through all crimps with crimps tightened at 1'-0" intervals.

For other Glare Screen dimensions and specifications, see Std. C-10.10.1.

Welding shall be shielded arc, full penetration.

Structural Steel, Glare Screen and Hardware shall be primed and finish coated in accordance with standard specifications. Color per Plans.

DESIGN APPROVED	STATE OF ARIZONA DEPARTMENT OF TRANSPORTATION DIVISION OF HIGHWAYS STANDARD DRAWINGS	REV.
APPROVED FOR DISTRIBUTION	GLARE SCREEN, TYPE "O", CONC. MEDIAN BARRIER	DRAWING NO. C-10.10.2

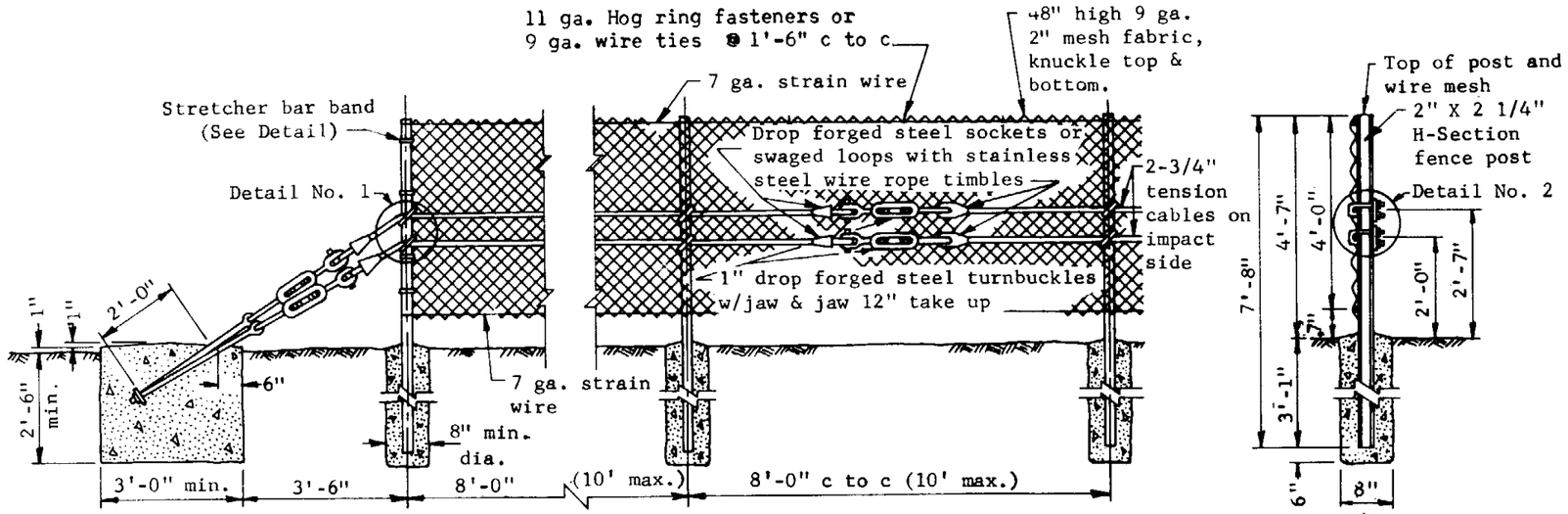

ELEVATION

END VIEW

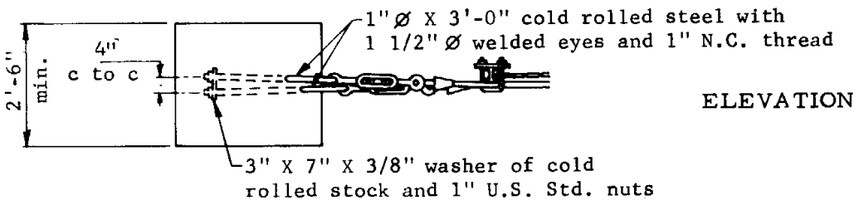

ANCHOR BLOCK PLAN

GENERAL NOTES

All concrete shall be Class A.

All material and fittings shall be galvanized in accordance with sections 711(E) and 723 of Std. Specifications.

3/4" tension cables shall be preformed, 6 X 9, hemp core, galvanized right regular lay and improved plow steel

Fittings not specifically detailed shall be approved, heavy duty design.

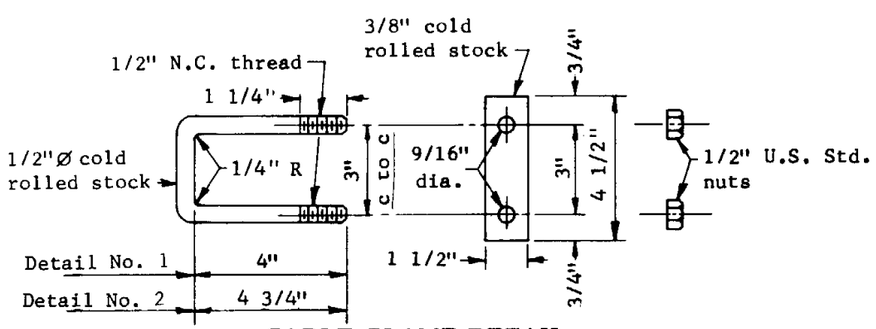

CABLE CLAMP DETAIL

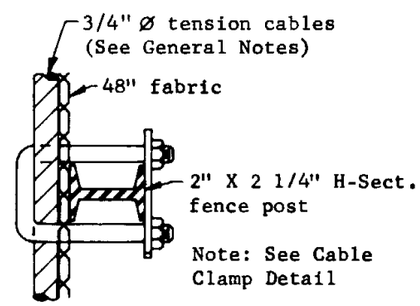

DETAIL NO. 2
Line Post Assembly

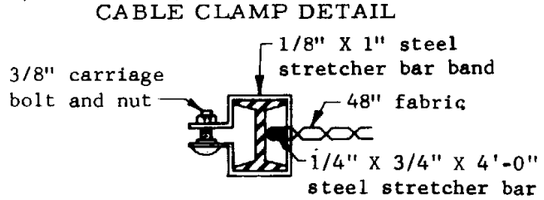

STRETCHER BAR
BAND DETAIL

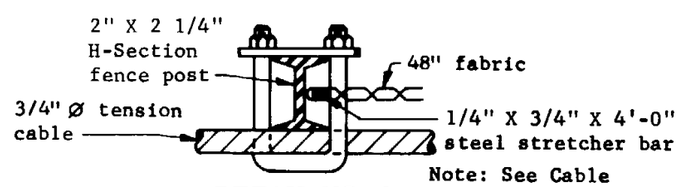

DETAIL NO. 1
End Post Assembly

DESIGN APPROVED	STATE OF ARIZONA DEPARTMENT OF TRANSPORTATION DIVISION OF HIGHWAYS STANDARD DRAWINGS	REV. 3/71
APPROVED FOR DISTRIBUTION	BARRIER, FENCE, CHAIN LINK & CABLE	DRAWING NO. C-10.11

GENERAL NOTE

Refer to Standard C-10.12 for Installation Details.

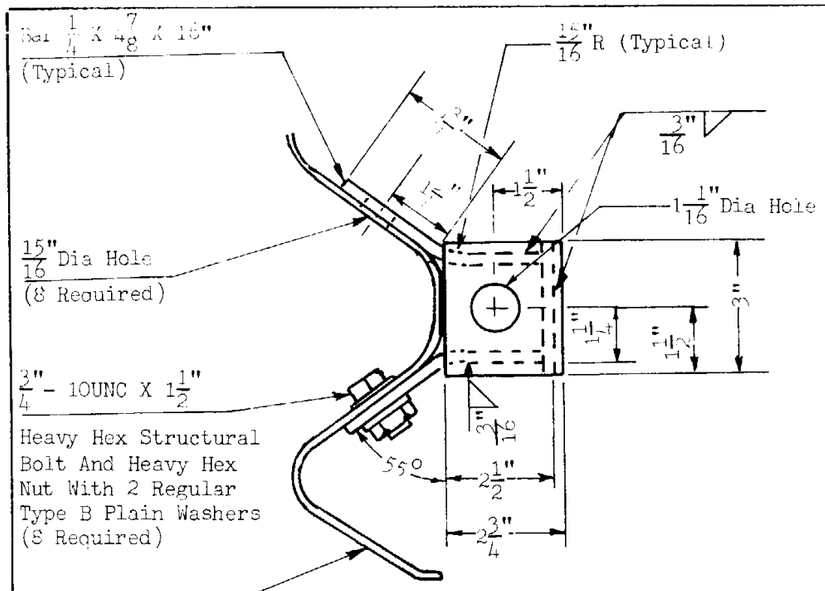

END VIEW

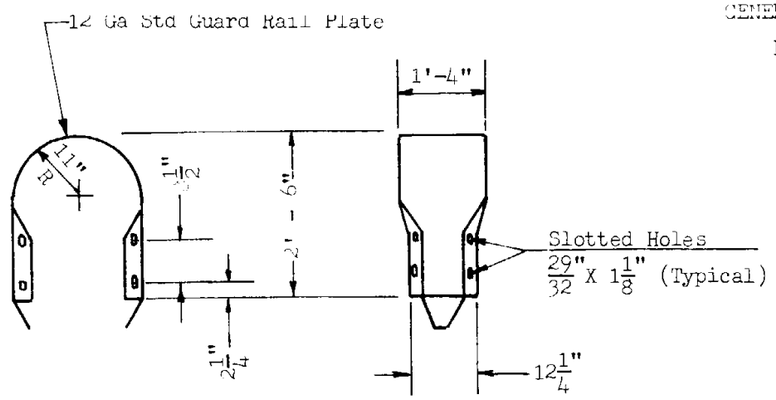

BUFFER END SECTION

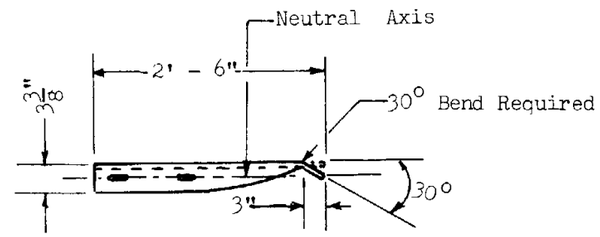

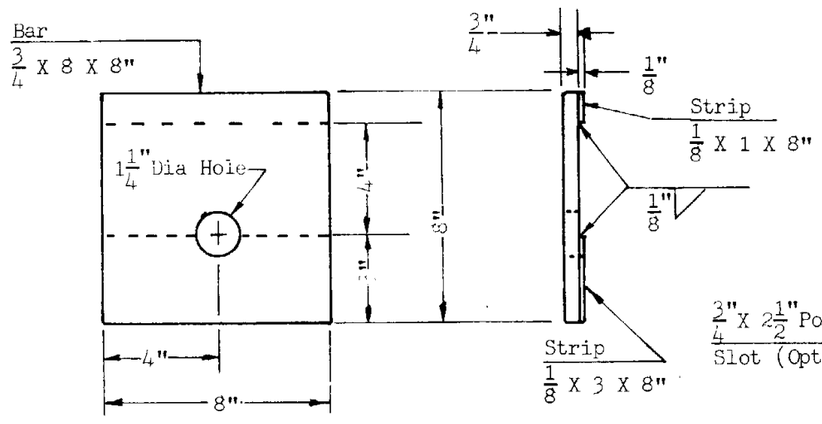

BEARING BAR

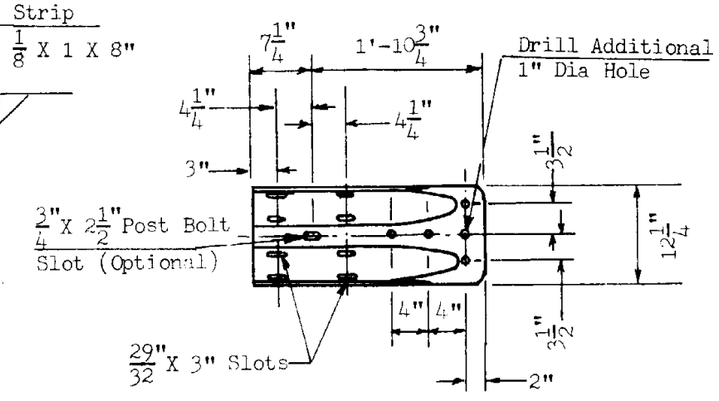

MODIFIED TERMINAL CONNECTOR

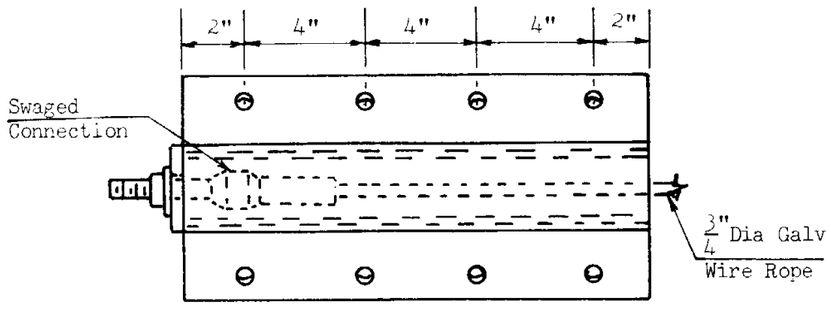

TOP VIEW

SIDE VIEW

RAIL ANCHOR ASSEMBLY

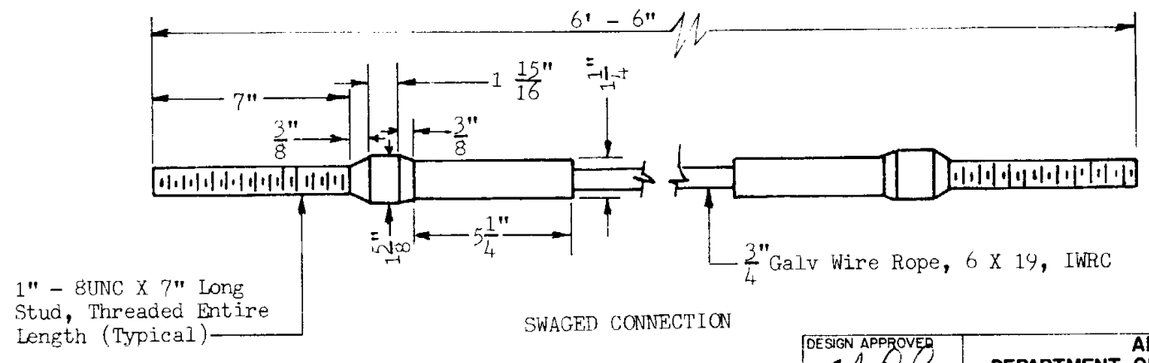

SWAGED CONNECTION

DESIGN APPROVED	ARIZONA DEPARTMENT OF TRANSPORTATION HIGHWAYS DIVISION-STANDARD PLANS	REV DATE 12/76
APPROVED FOR DISTRIBUTION	BREAKAWAY CABLE TERMINAL, HARDWARE DETAILS	PLAN NO. C-10.13

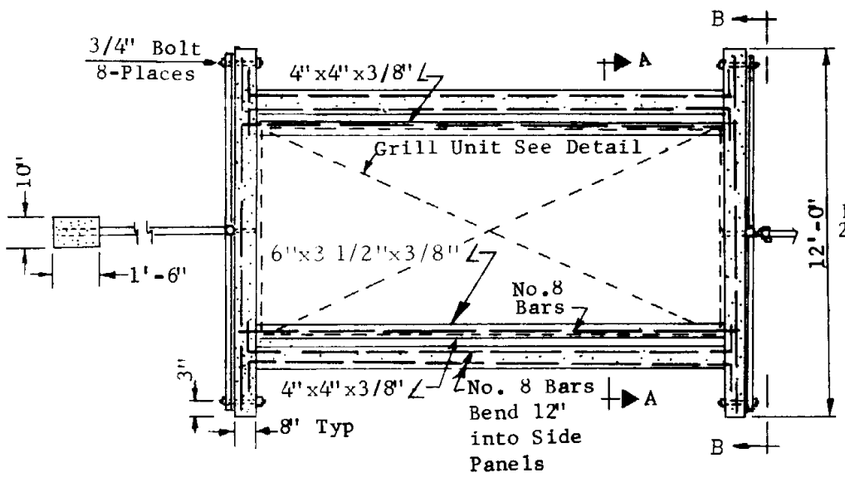

PLAN

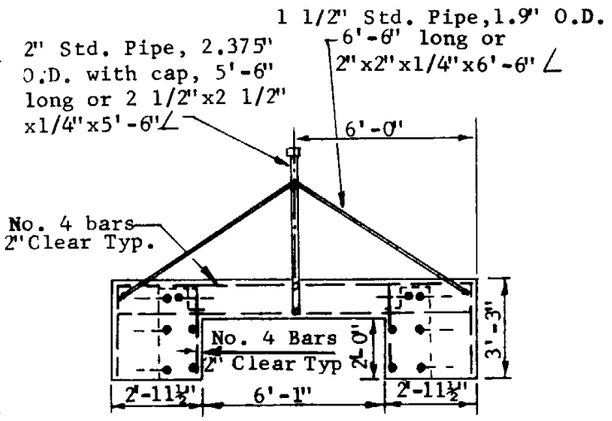

SECTION B-B
Typical Both Ends

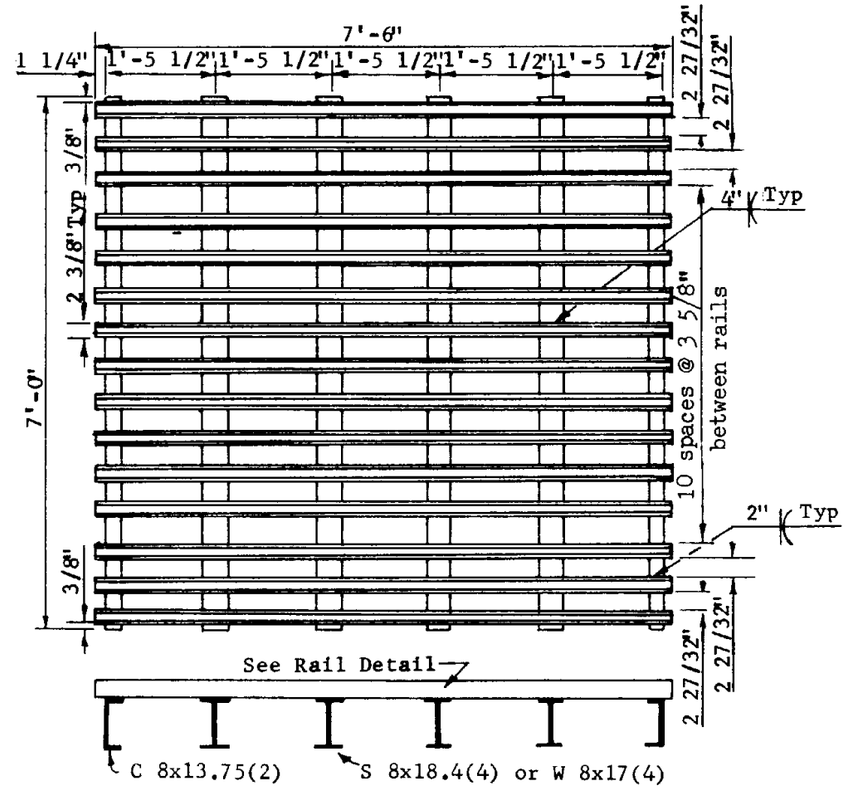

GRILL UNIT DETAIL

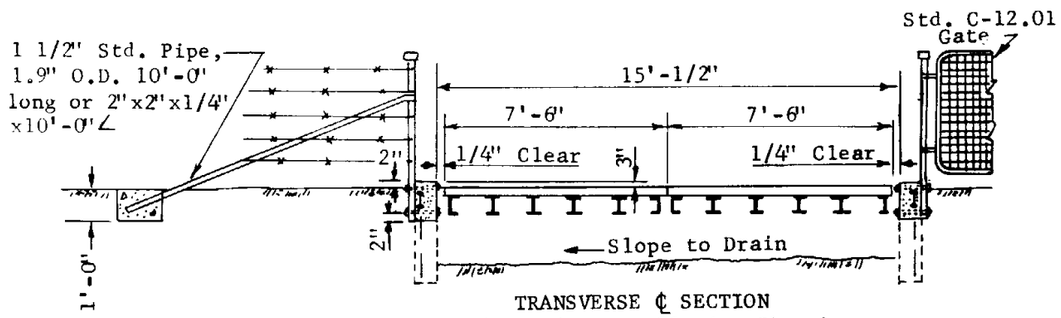

TRANSVERSE ℄ SECTION
(2- Unit Installation Shown)

Rdwy. Width	Grill Units Required
20'	4
28'	5
34'	6
36'	6
38'	7
40'	7

WIDTH TABLE

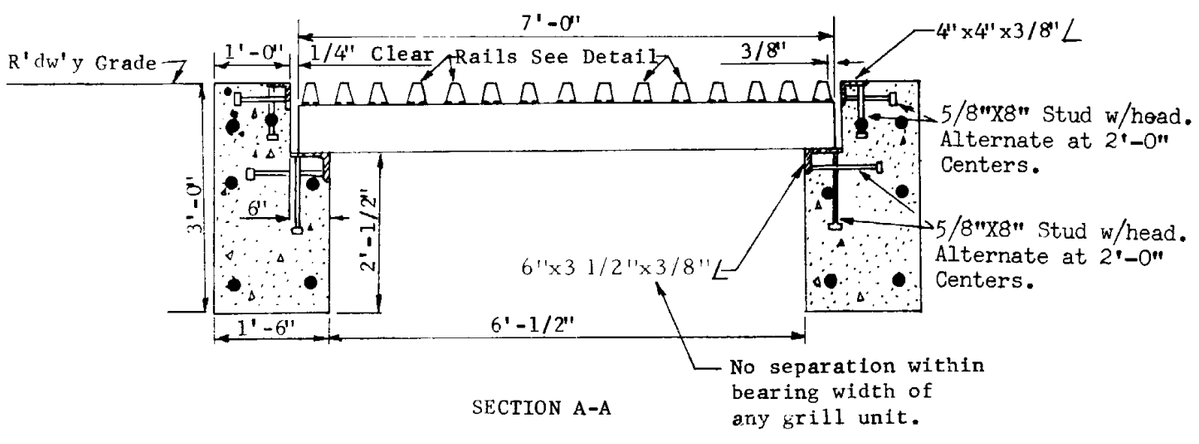

SECTION A-A

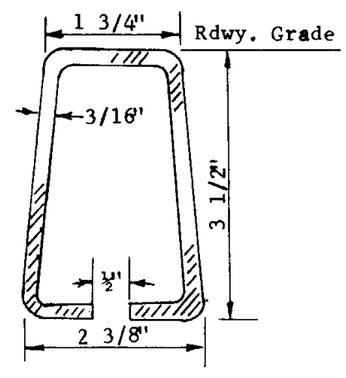

RAIL DETAIL

GENERAL NOTES

All concrete shall be Class A. Round exposed concrete corners of concrete side sections only.

All structural steel, posts, and braces shall be in accordance with the specifications

All exposed structural steel, posts and braces shall be given one coat of No. 1 paint

Cattle Guard may be constructed with or without gate. See Plans. Cattle Guard width shall be specified in number of grill units. See table.

DESIGN APPROVED	STATE OF ARIZONA DEPARTMENT OF TRANSPORTATION DIVISION OF HIGHWAYS STANDARD DRAWINGS	REV 6/74 11/74
APPROVED FOR DISTRIBUTION	CATTLE GUARD, ROADWAY	DRAWING NO. C-11.01

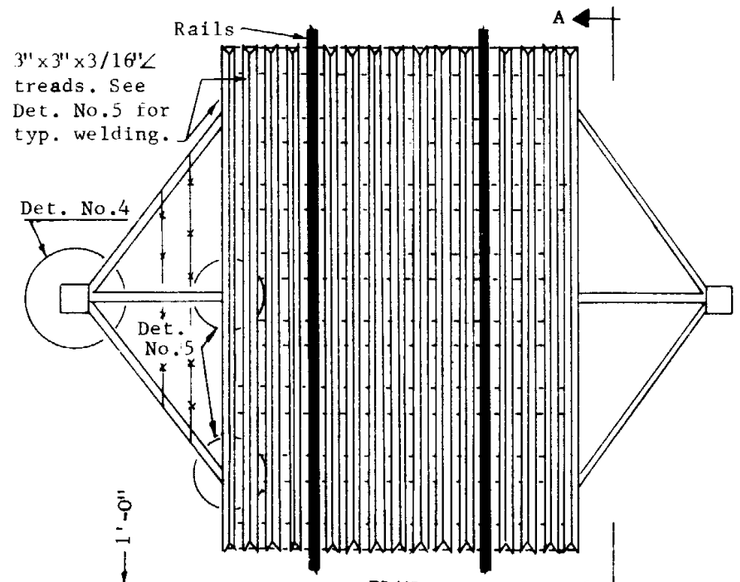

PLAN

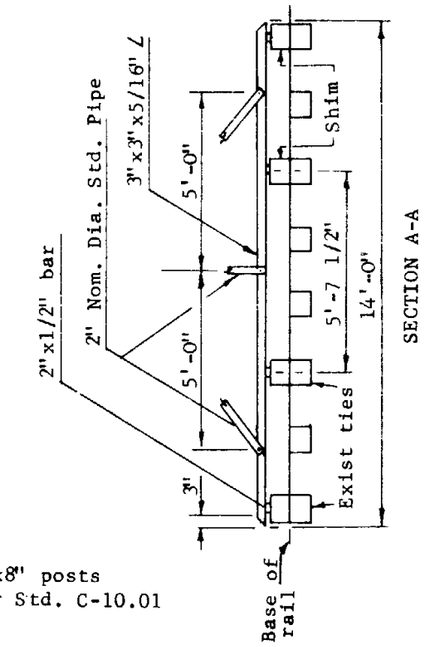

SECTION A-A

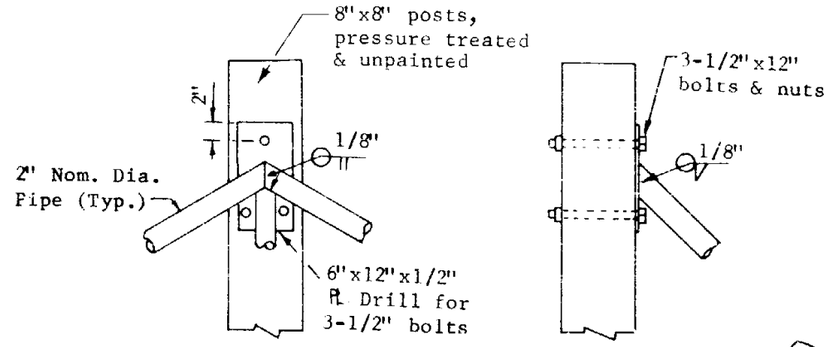

DETAIL NO.4

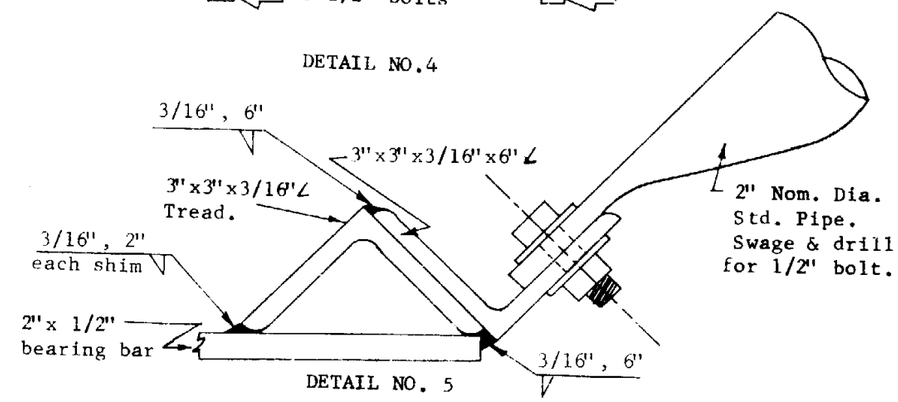

DETAIL NO. 5

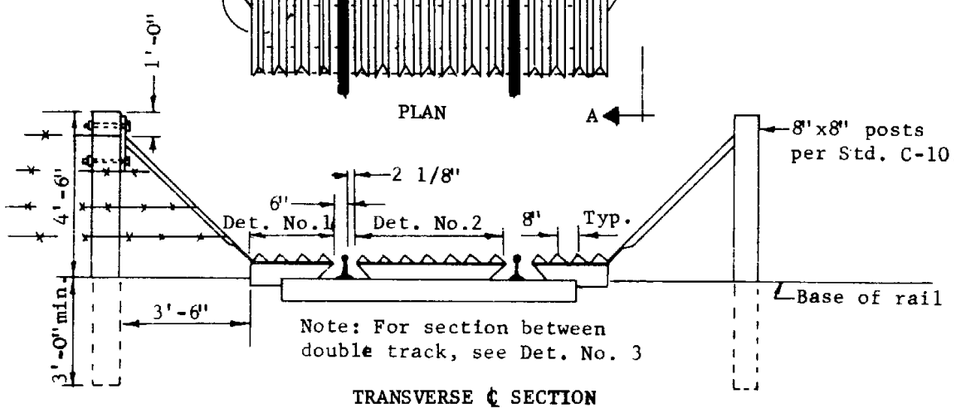

Note: For section between double track, see Det. No. 3

TRANSVERSE ℄ SECTION

*SHIM HEIGHT						
RAIL LBS./YD.						
80	90	110	115	119	131	150
2 1/4"	2 7/8"	3 1/2"	3 7/8"	4 1/16"	4 3/8"	4 9/16"
5/8" DIA. GALV. DOME HEAD SPIKE LENGTH						
11"	11"	11"	11"	13"	13"	13"

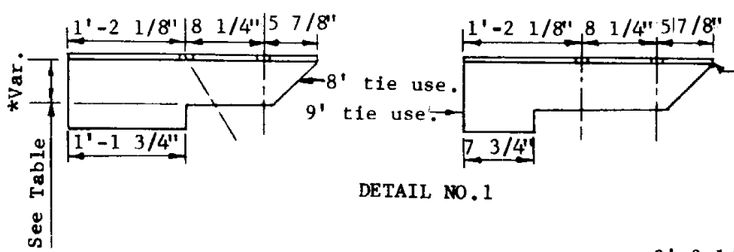

DETAIL NO.1

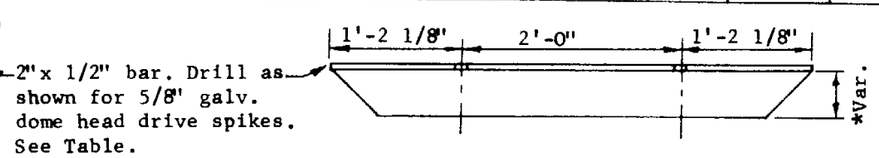

2"x 1/2" bar. Drill as shown for 5/8" galv. dome head drive spikes. See Table.

DETAIL NO.2

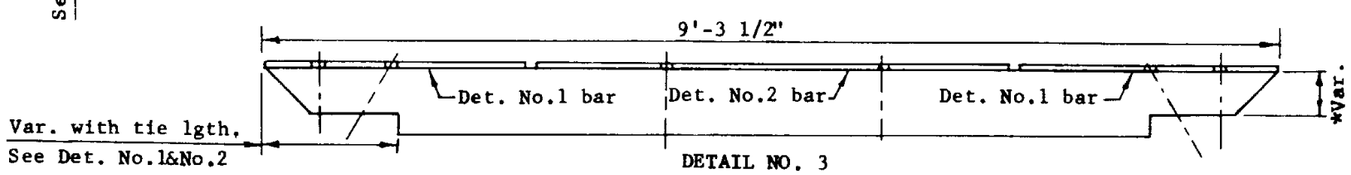

DETAIL NO. 3

CENTER SECTION FOR DOUBLE TRACKS ON 15' CENTERS

GENERAL NOTES

This design applicable only to wood tie track construction. Wood shims shall be unpainted and cut from material meeting the specifications of the existing ties.

3"x3"x3/16" treads, 2"x1/2" bearing bars and 2" nom. dia. pipe wing assemblies shall be primed with one coat of No. 1-B paint and finished with two coats of No. 12 paint.

DESIGN APPROVED	STATE OF ARIZONA DEPARTMENT OF TRANSPORTATION DIVISION OF HIGHWAYS STANDARD DRAWINGS	REV. 6/74 11/74
APPROVED FOR DISTRIBUTION	CATTLE GUARD, RAILROAD	DRAWING NO. C-11.03

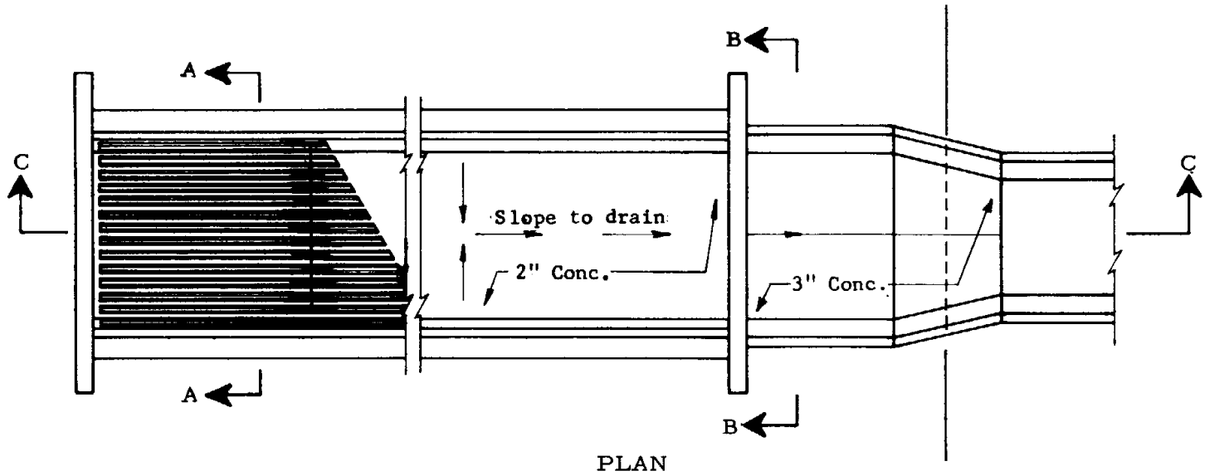

PLAN

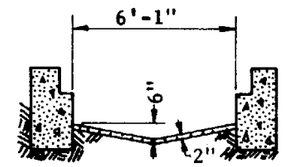

SECTION A-A

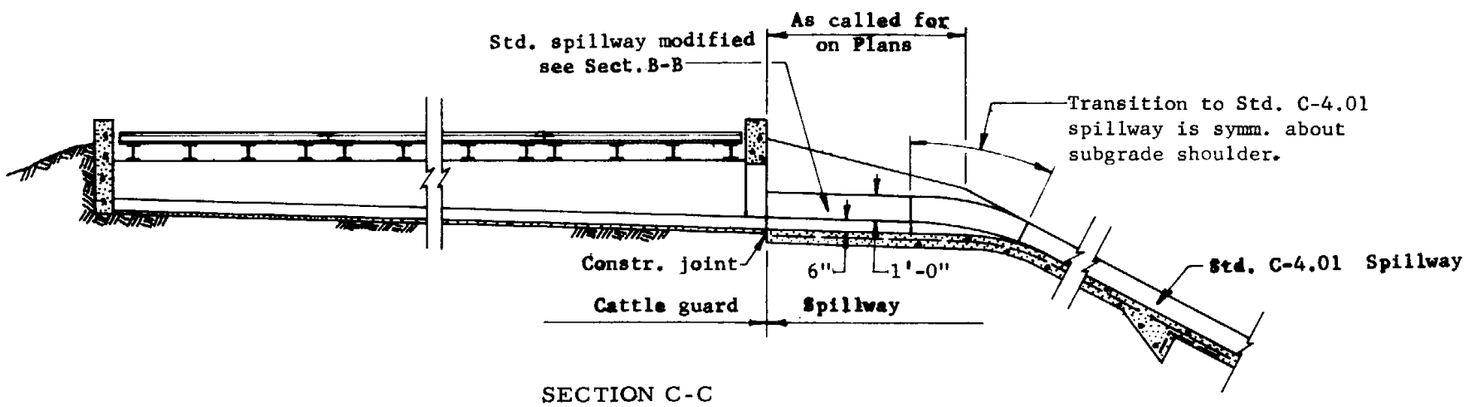

SECTION C-C
IN EMBANKMENT

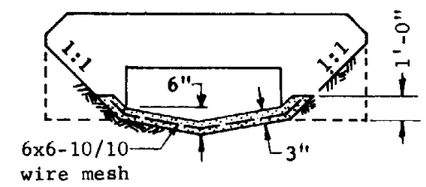

SECTION B-B

GENERAL NOTES

For all other cattle guard details, see Std. C-11.01.

This standard shall be used in embankment or where highly erodable soill is found.

All concrete shall be Class A.

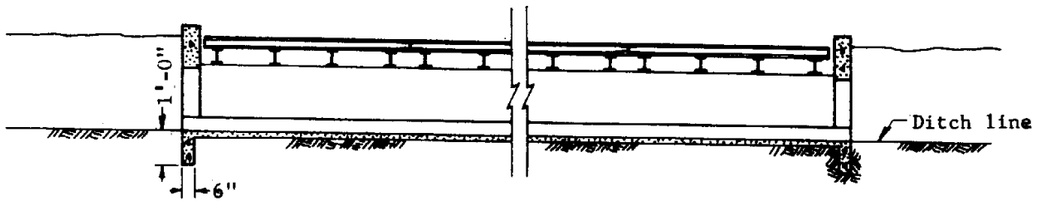

SECTION C-C

WHERE USED FOR THRU DRAINAGE-
CATTLE GUARD OPEN BOTH ENDS

DESIGN APPROVED	STATE OF ARIZONA DEPARTMENT OF TRANSPORTATION DIVISION OF HIGHWAYS STANDARD DRAWINGS	REV. 12/68
APPROVED FOR DISTRIBUTION	Cattle Guard, Drainage	DRAWING NO. C-11.04

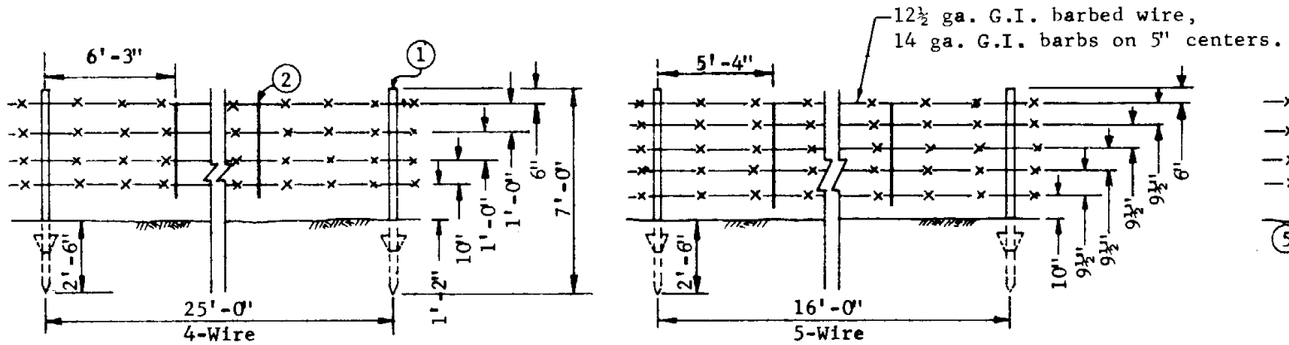

LINE PANELS

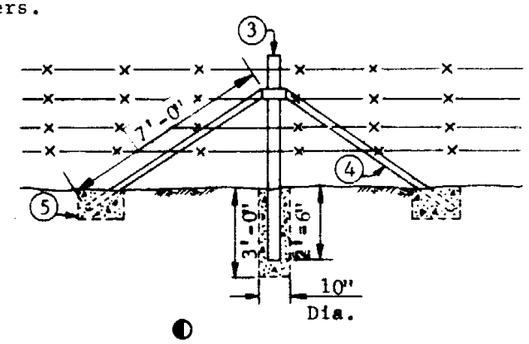

STRAIN POST
To be spaced at 650' max. intervals

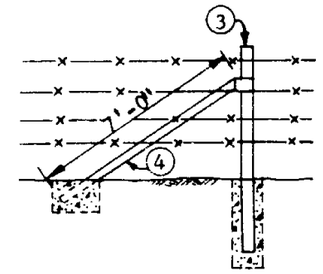

BRACE POST

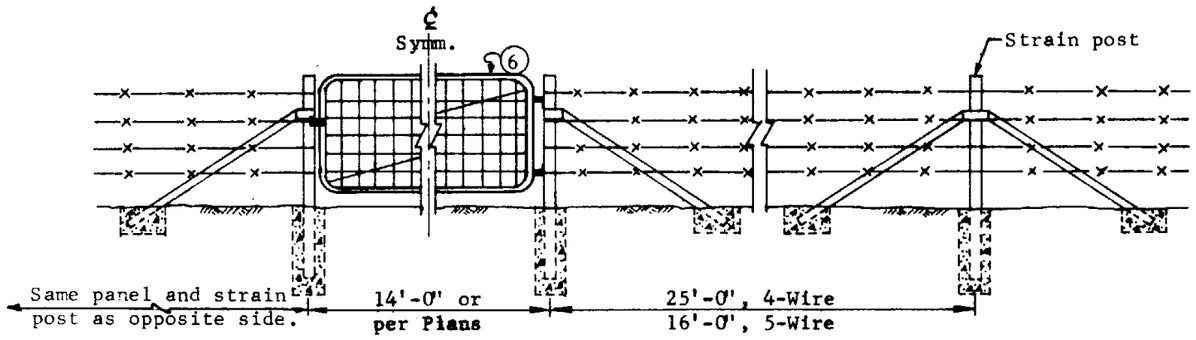

NO. 1 GATE

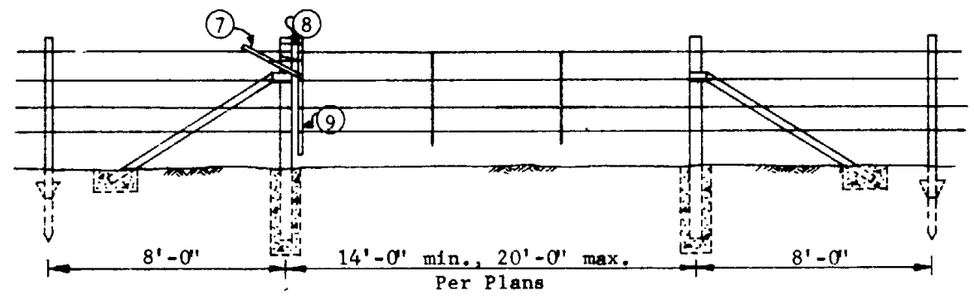

NO. 2 GATE

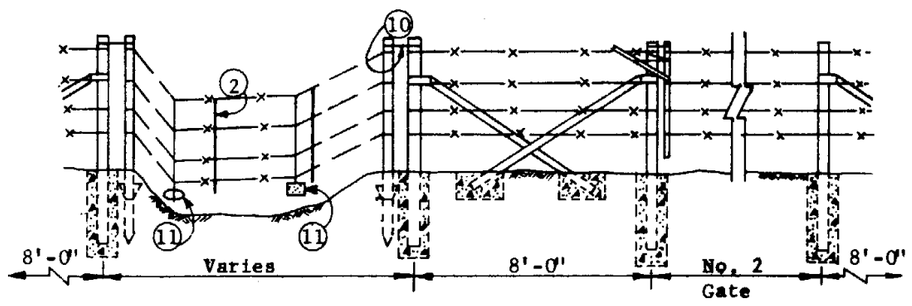

FLOOD GATE

◐ Strain posts with braces shall be installed at all corners, angles exceeding 15° and fence intersections. There shall be a brace from the post to the ground in each fence panel attached to the strain post. The first line post from each strain post shall be installed at a maximum distance of 8 ft.

(1) Line Post. "T","U","Rail","Hat" or similar production section. Wt., exclusive of anchor, 1.3lb/ft. min. Shall be punched, knobbed or corrugated to hold wire firmly. Wire ties shall be 11 ga galv. wire min.
(2) 9½ ga., galv.,twisted wire stays, 42" long. Space at 5'-4" & 6'-3" int. for 5 & 4 wire fence respectively.
(3) 2" nom. dia. pipe or 2½"x 2½"x ¼"∠
(4) 1½"nom. dia. pipe or 2"x 2"x ¼"∠
(5) 1'-6"x 1'-0"x 1'-0" conc. footing.
(6) 1 3/8" Ø tubing. 2-Vertical braces. 1-adjustable diagonal guy. Mesh shape optional with min. 11 ga. line wires and 12½ ga. cross wires. Fully galv.
(7) 2"x2"x2' pry stick. D.F. constr. grade.
(8) Double loops of 9 ga. galv. wire. Top & bottom.
(9) 2"x 2"x 4'-0" D.F. constr. grade.
(10) Single loop. 9 ga. galv. wire.
(11) 30-35 lb. stone sag wt. As alternate, use 7½"x 7½"x 7½" conc. cube with cast in doubled and twisted 9 ga. wire loop hanger.

GENERAL NOTES

Posts and braces shall be green in color. Posts may have white tops. Wood parts of No. 2 gate shall be unpainted.

When line post anchors are omitted or post hole is drilled, posts shall be set in concrete.

On curves, the fence shall be so constructed that the wire tension is against the post and not against the wire ties.

A maximum of two splices is permitted between strain posts but not on the same wire. No splice shall be placed less than 100' from a strain, corner or gate post.

Concrete shall conform to the requirements of the specifications

Tolerance on distance between ground and bottom wire at any point equals ±4"

DESIGN APPROVED [signature]	STATE OF ARIZONA DEPARTMENT OF TRANSPORTATION DIVISION OF HIGHWAYS STANDARD DRAWINGS	REV. 6/74 11/74
APPROVED FOR DISTRIBUTION [signature]	FENCE & GATES, LINE, STEEL POSTS	DRAWING NO. C-12.01

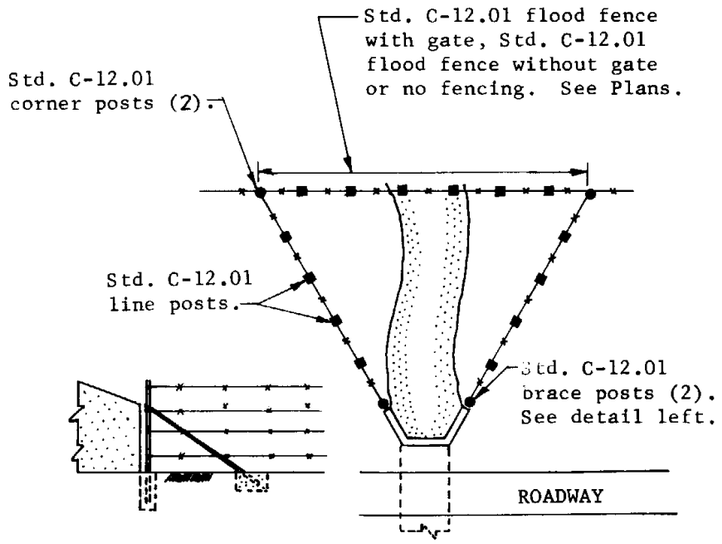

WING FENCE DETAIL

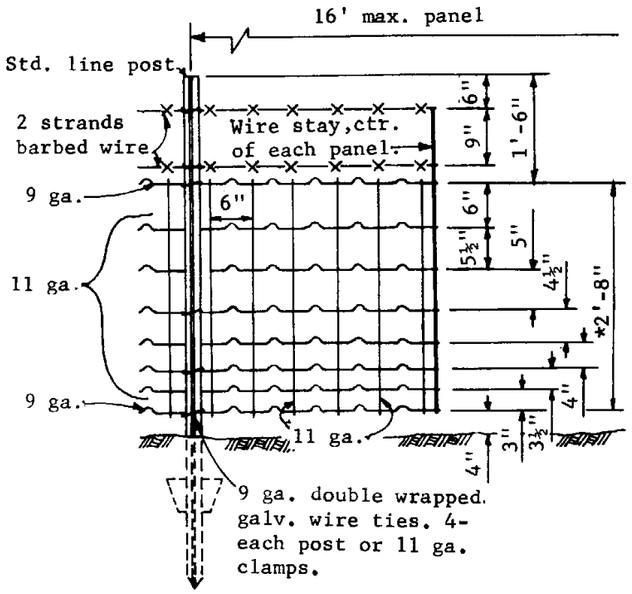

STOCK FENCE

*Rectangular mesh galv. stock fence.

WOOD POST FENCE-TYPE 1 or 2 GATE-4 or 5 WIRE

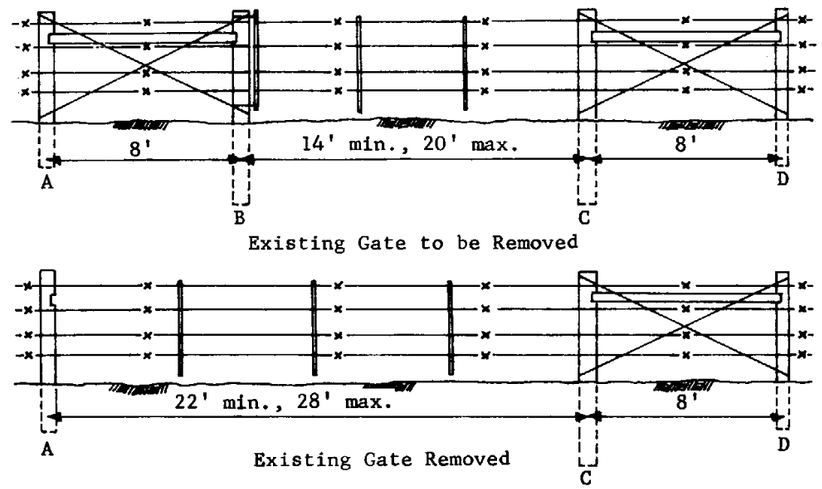

STD. C-12.01 FENCE-TYPE 1 or 2 GATE-4 or 5 WIRE

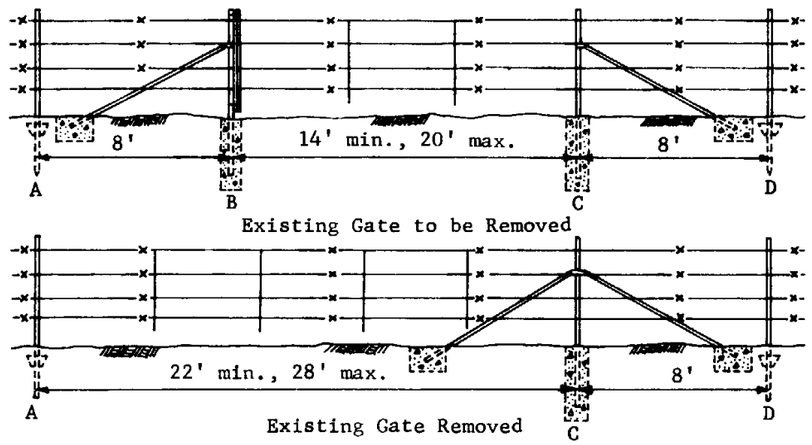

DETAIL FOR REMOVING EXISTING LINE GATES

Procedure: Remove gate and hardware and wire between posts A and C. Install new second brace at post C (Std. C-12.01 fence only). Stretch new wire between posts A and C. Remove post B and brace.
(Approved salvaged wire may be used.)
Staples for wood posts shall be 1 1/2" galvanized and fabricated from 9 gauge wire.

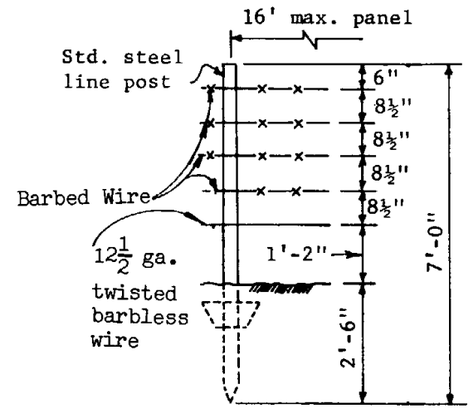

Drawn for 5-wire

GAME FENCE

4-wire game fence shall be constructed using standard 4-wire line fence post spacing and substituting 12 1/2 ga. twisted, barbless wire for the bottom wire.

GENERAL NOTES

For any details not shown on this sheet, refer to Std. C-12.01

Concrete for posts may be job mix concrete of not less than 5 sacks per cu. yd.

DESIGN APPROVED	STATE OF ARIZONA DEPARTMENT OF TRANSPORTATION DIVISION OF HIGHWAYS STANDARD DRAWINGS	REV. 6/74 3/78
APPROVED FOR DISTRIBUTION	FENCE, LINE, SUPPLEMENTARY DETAILS	DRAWING NO. C-12.02

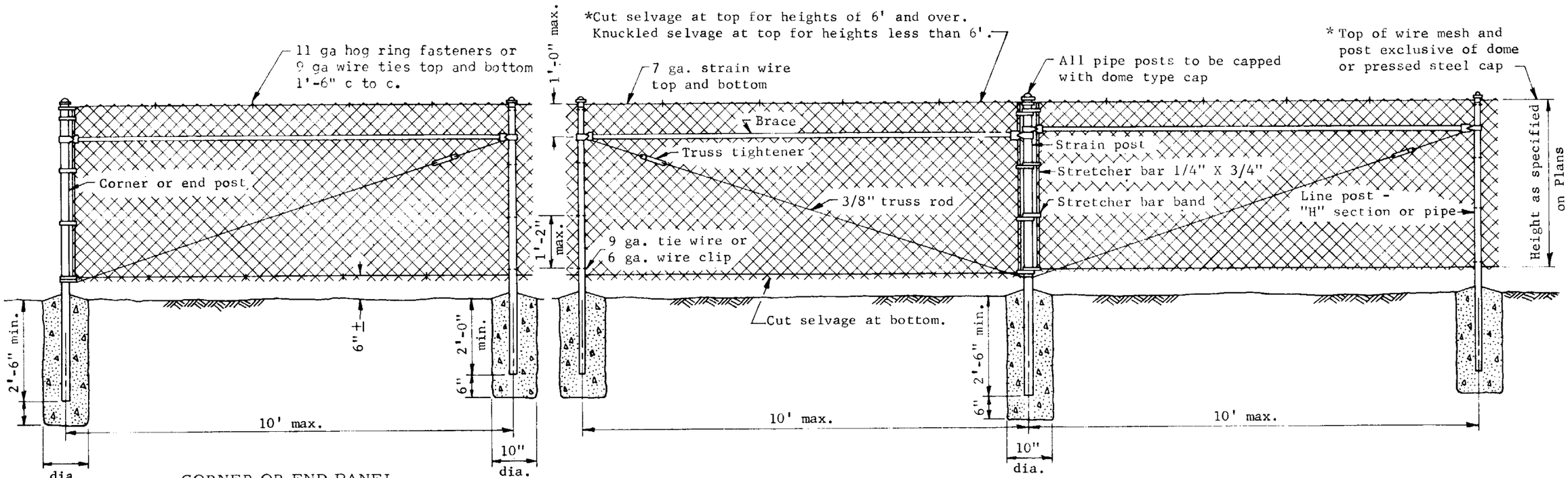

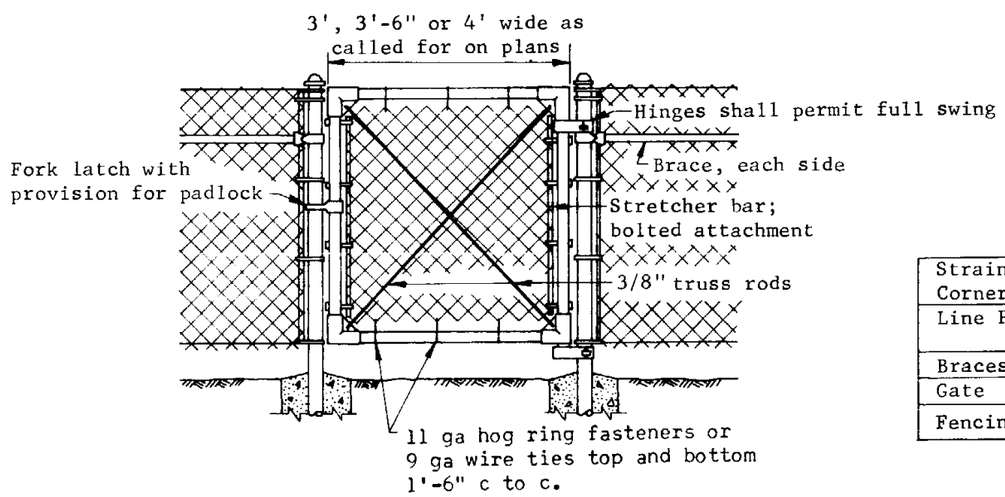

WALK GATE

Strain, End & Corner Posts	2" I.D. Nominal size pipe
Line Posts	1 1/2" I.D. Nominal size pipe "H" Sec. 1 7/8" X 1 5/8" Nominal size
Braces	1 1/4" I.D. Nominal size pipe
Gate	1 1/2" I.D. Nominal size pipe
Fencing	9 ga., 2" mesh fabricated wire

GENERAL NOTES

Concrete for posts may be job mix of not less than 5 sacks per cu. yd.

Gates shall be of welded or malleable cast or pressed steel fitting construction.

Fittings not specifically detailed shall be of approved heavy duty design.

"H" Section posts shall be capped with pressed steel top.

DESIGN APPROVED	STATE OF ARIZONA DEPARTMENT OF TRANSPORTATION DIVISION OF HIGHWAYS STANDARD DRAWINGS	REV. 5/72 7/75
APPROVED FOR DISTRIBUTION	FENCE & GATE, CHAIN LINK	DRAWING NO. C-12.03

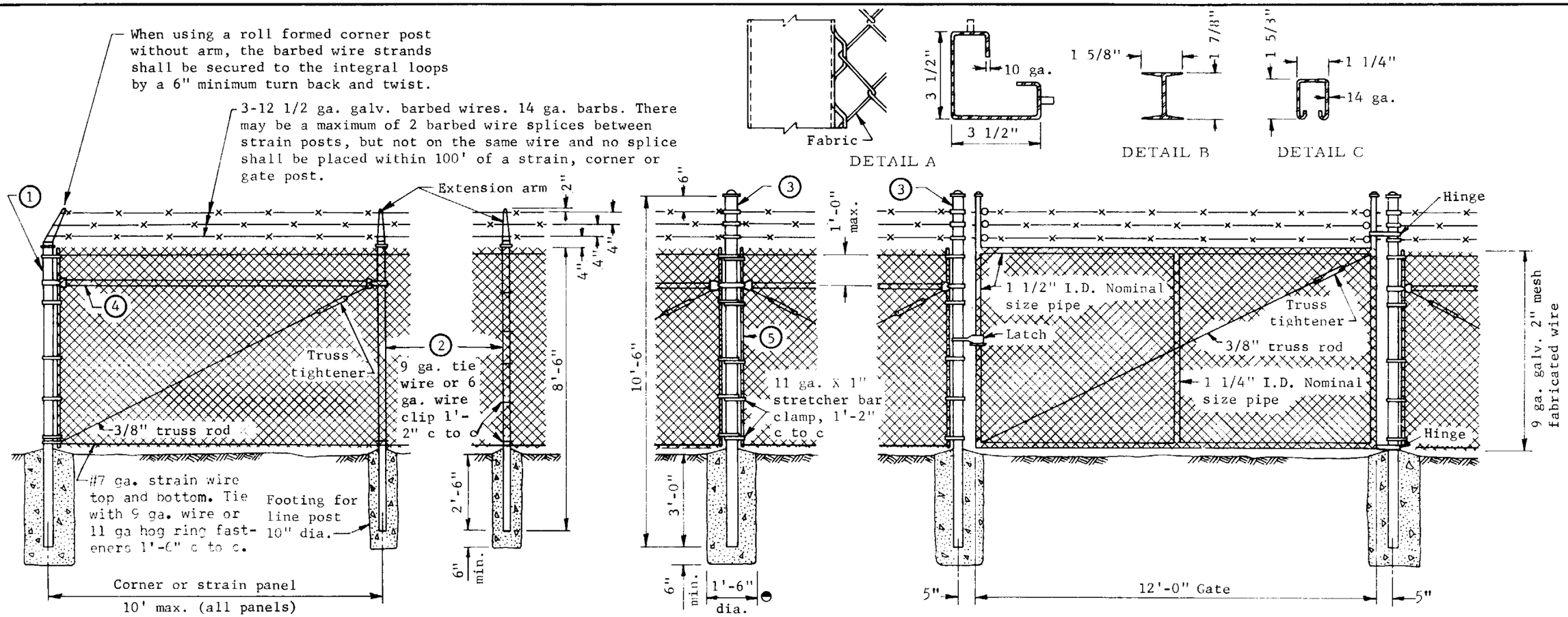

Note: For Walk Gate, see Std. C-12.03.

Fencing shall be 9 ga., 2" mesh, fabricated wire.

Member	Size	Lgth.
Fence Using Pipe Members		
① Corner post	3 1/2" I.D. nominal pipe size	9'-0"
② Line post	1 1/2" I.D. nominal pipe size	8'-6"
③ Strain or gate post	3 1/2" I.D. nominal pipe size	10'-6"
④ Brace	1 1/4" I.D. nominal pipe size	as req'd.
⑤ Stretcher bar	1/4" x 3/4" flat	6'-2"
Fence Using Roll Formed Members		
① Corner post	5.14# /ft. section with integral fabric loops per Detail A or equal	9'-0"
② Line post	2.72# /ft. section per Detail B or equal	8'-6"
③ Strain or gate post	3 1/2" I.D. nominal pipe size	10'-6"
④ Brace	1.35# /ft. section per Detail C or equal	as req'd.
⑤ *Stretcher bar	1/4" X 3/4" flat	6'-2"

* Not used with corner post having integral fabric loops. (See Detail A)

GENERAL NOTES

Concrete for posts may be job mix concrete of not less than 5 sacks per cu. yd.

Gates shall be of welded or malleable cast or pressed steel fitting construction.

Fittings not specifically detailed shall be of approved heavy duty design.

Strain posts shall be spaced at 500' maximum intervals and both corner and strain posts shall have strain panels each side.

All pipe posts shall be capped.

DESIGN APPROVED	STATE OF ARIZONA DEPARTMENT OF TRANSPORTATION DIVISION OF HIGHWAYS STANDARD DRAWINGS	REV. 5/72
APPROVED FOR DISTRIBUTION	FENCE & GATE, INDUST. TYPE, FAB. WIRE	DRAWING NO. C-12.04

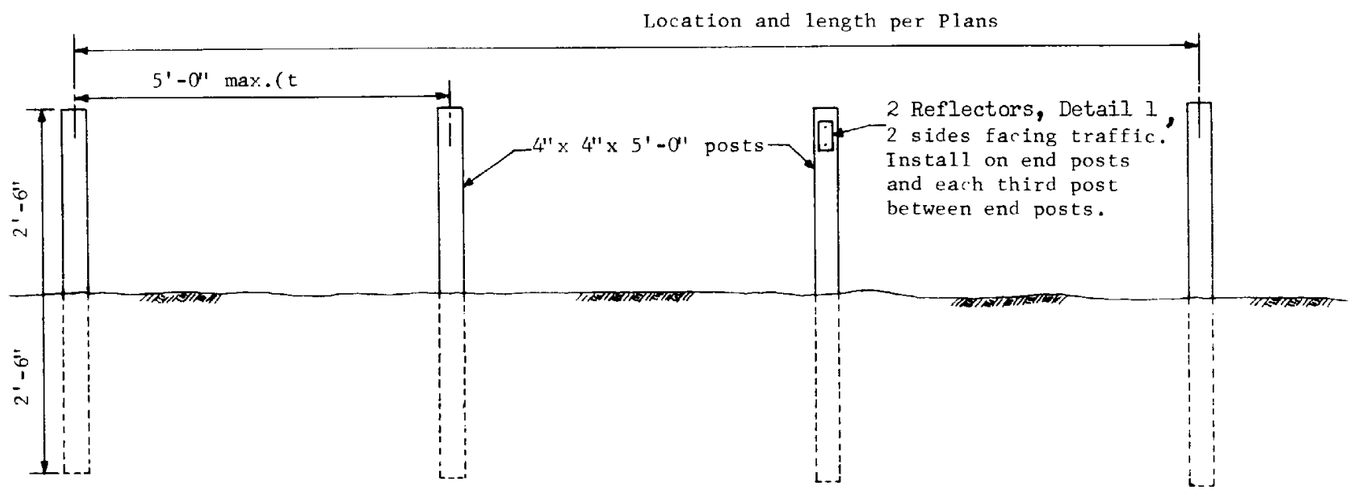

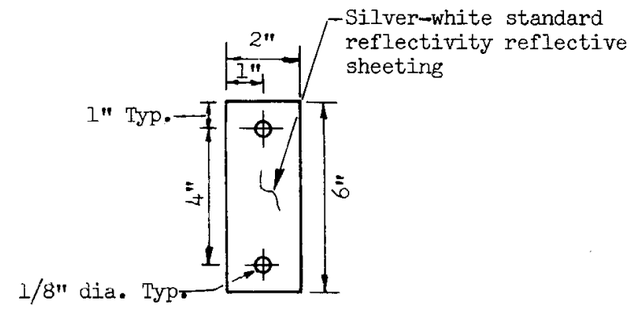

DETAIL 1

GENERAL NOTES

Barrier Fence shall be used only to discourage crossings between roadways and shall not be used where guard rail is required or physical barriers are present.

Additional posts shall be placed at sharp changes in vertical alignment.

Posts shall be D. F. nominal 4"x 4" rough, pressure treated and unpainted.

Posts may be driven.

Backfill for excavated holes shall be thoroughly rammed and tamped.

Post holes in rock shall be backfilled with job mix concrete of not less than 5-sacks per C.Y.

DESIGN APPROVED	STATE OF ARIZONA DEPARTMENT OF TRANSPORTATION DIVISION OF HIGHWAYS STANDARD DRAWINGS	REV 6/74
APPROVED FOR DISTRIBUTION	FENCE, BARRIER, WOOD POSTS	DRAWING NO. C-12.05

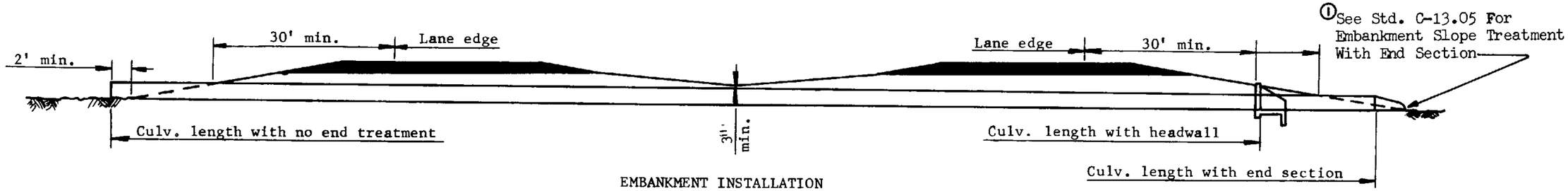

EMBANKMENT INSTALLATION
Divided Hwy. - 2 Way Rdwy. Similar

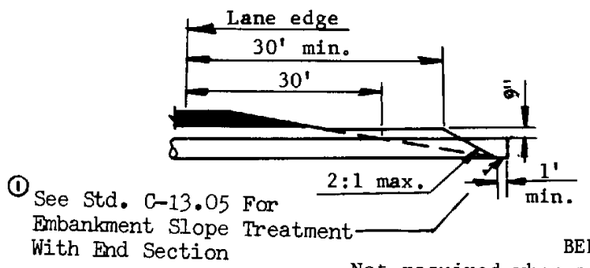

BERM
Not required when pipe projection is protected by guard rail

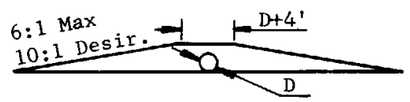

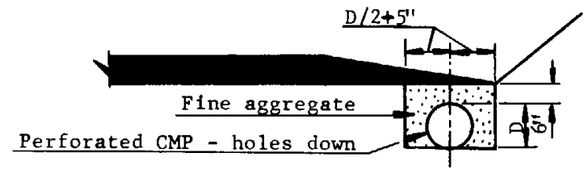

PERFORATED CMP INSTALLATION

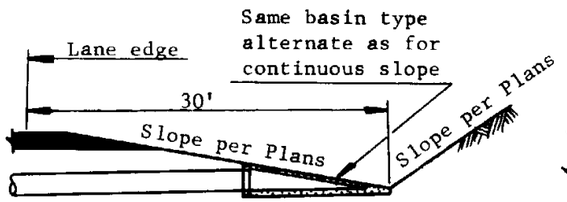

Sag Location

Continuous Slope Location

TRAFFIC - SAFE CUT DITCH INSTALLATION

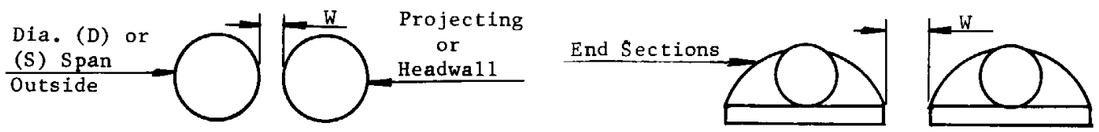

Dia. or Span	W		
	Installation Type		
	Projecting	Headwall	End Sections
12'' - 24''	12''	12''	12''
30'' - 66''	(D or S)/2	(D or S)/2	12''
72'' & Over	36''	36''	12''

MINIMUM SPACING FOR MULTIPLE INSTALLATIONS

GENERAL NOTES

Any required inlet and/or outlet protection shall be as called for on plans.

See also: C-14.00 and remaining C-13.00 series standards.

DESIGN APPROVED	STATE OF ARIZONA DEPARTMENT OF TRANSPORTATION DIVISION OF HIGHWAYS STANDARD DRAWINGS	REV. 6/74 6/79
APPROVED FOR DISTRIBUTION	PIPE CULVERT INSTALLATION	DRAWING NO. C-13.01

DESIGN NOTE:
Avoid specifying rubber gasketed joints in concrete pipe sizes over 42" diameter or equivalent except where control of infiltration and exfiltration is a critical requirement.

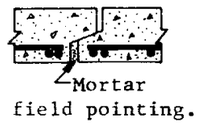

BELL & SPIGOT-RCP

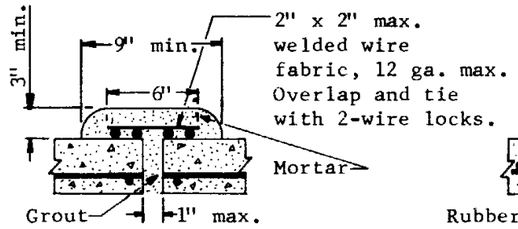

SQ. END-RCP

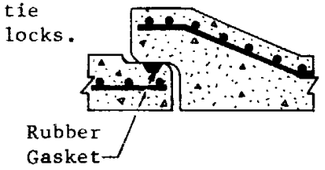

FLARED BELL-RGRCP

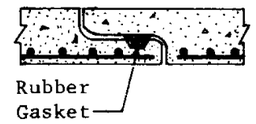

FLUSH BELL-RGRCP

CONCRETE PIPE JOINTS
(For CMP Joint Data-See Stds. C-13.05)

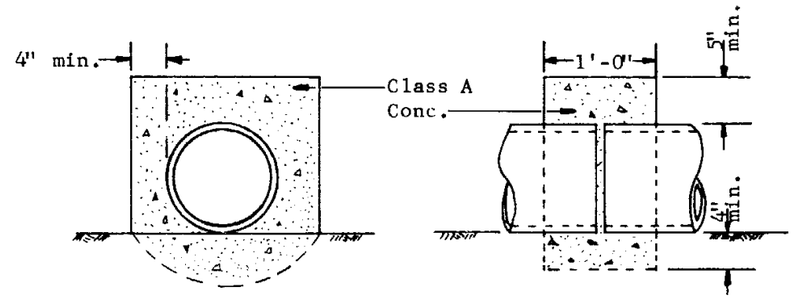

CONCRETE ENCASEMENT

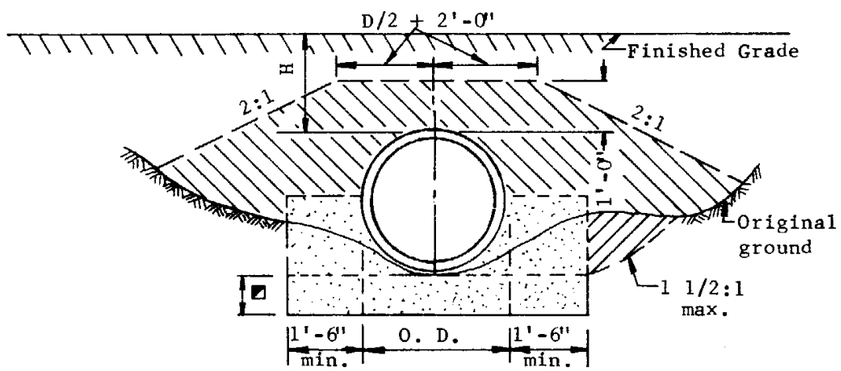

TYPE 1 - POSITIVE PROJECTING

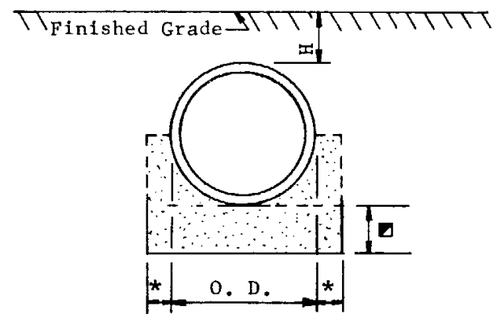

*O.D./4 max., 6" min.

SOLID ROCK OR OTHER
UNYIELDING MATERIAL

GENERAL NOTES

Pressure lines will require rubber gasketed joints. Gravity flow lines joints may be mortar, preformed or troweled mastic.

For max. and min. fill heights for corrugated metal pipe and pipe arch, see Stds. C-13.06 and C-13.08; for reinforced concrete pipe, see Std. C-13.03.

Bedding material shall be placed to spring line or point of maximum span.

◪ 6" min. for pipe in trench.
3" min. for pipe on natural ground.
1'-0" min. for pipe on solid rock.
or other unyielding material.

▭ Bedding material.
For payment limits, see
Stds. C-13.11 through C-13.14.

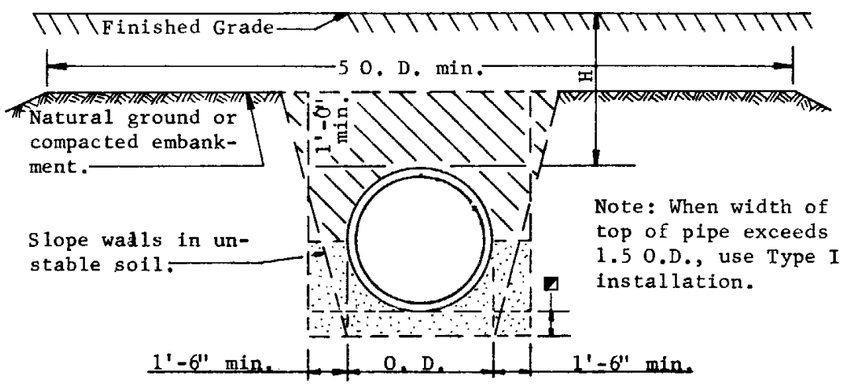

TYPE 2 - NEGATIVE PROJECTING

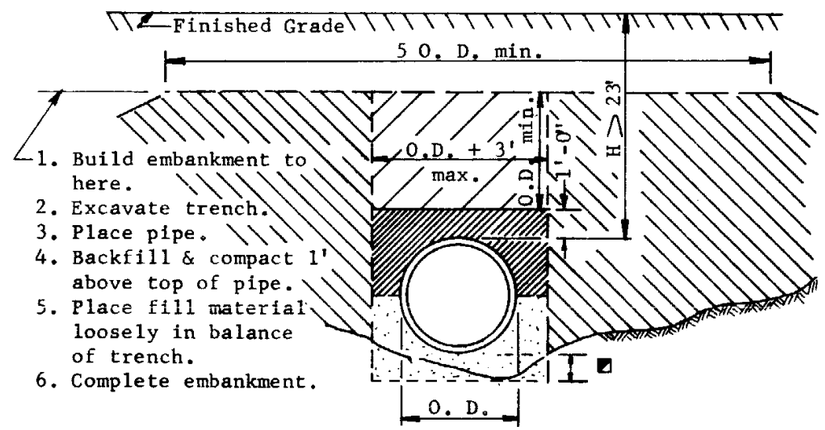

TYPE 3 - IMPERFECT TRENCH

DESIGN APPROVED	STATE OF ARIZONA DEPARTMENT OF TRANSPORTATION DIVISION OF HIGHWAYS STANDARD DRAWINGS	REV. 6/74
APPROVED FOR DISTRIBUTION	PIPE CULVERT PLACEMENT	DRAWING NO. C-13.02

HORIZONTAL ELLIPTICAL PIPE

Size Inches	Area of Open'g Sq.Ft.	HE II Crack D Load 1000			HE III Crack D Load 1350			HE IV Crack D Load 2000		
		Min.	Type (1)	Type (2)	Min.	Type (1)	Type (2)	Min.	Type (1)	Type (2)
14 x 23	1.8				2	13	20	1	20	NL
19 x 30	3.3				2	13	15	1	20	NL
22 x 34	4.1				2	13	15	1	20	40
24 x 38	5.1	2	10	10	2	13	15	1	20	30
27 x 42	6.3	2	10	10	2	13	13	1	20	25
29 x 45	7.4	2	10	10	2	13	13	1	20	25
32 x 49	8.8	2	10	10	1	13	13	1	20	22
34 x 53	10.2	2	10	10	1	13	13	1	20	22
38 x 60	12.9	2	10	10	1	13	13	1	20	22
43 x 68	16.6	1	10	10	1	13	13	1	20	22
48 x 76	20.5	1	10	10	1	13	13	1	20	22
53 x 83	24.8	1	10	10	1	13	13	1	20	22
58 x 91	29.5	1	10	10	1	13	13	1	20	22
63 x 98	34.6	1	10	10	1	13	13	1	20	22
68 x106	40.1	1	10	10	1	13	13	1	20	22

VERTICAL ELLIPTICAL PIPE

Size Inches	Area of Open'g Sq.Ft.	VE II Crack D Load 1000			VE III Crack D Load 1350				VE IV Crack D Load 2000				VE V Crack D Load 3000				VI Crack D Load 4000			
		Min.	Type (1)	Type (2)	Min.	Type (1)	Type (2)	Type (3)	Min.	Type (1)	Type (2)	Type (3)	Min.	Type (1)	Type (2)	Type (3)	Min.	Type (1)	Type (2)	Type (3)
45 x 29	7.4	2	15	15	2	23	40	88	1	35	NL	NL	1	NL	NL	NL	1	NL	NL	NL
49 x 32	8.8	2	15	15	2	18	30	78	1	28	NL	NL	1	NL	NL	NL	1	NL	NL	NL
53 x 34	10.2	2	15	15	2	18	25	70	1	27	NL	85	1	NL	NL	NL	1	NL	NL	NL
60 x 38	12.9	2	15	15	2	18	20	70	1	27	55	80	1	65	NL	NL	1	75	NL	NL
68 x 43	16.6	2	15	15	2	18	20	70	1	27	40	80	1	50	NL	NL	1	55	NL	NL
76 x 48	20.5	2	15	15	2	18	18	70	1	27	35	77	1	40	NL	NL				
83 x 53	24.8	2	15	15	2	18	18	70	1	27	30	77	1	35	NL	NL				
91 x 58	29.5	2	15	15	2	18	18	70	1	27	30	74								
98 x 63	34.6	2	15	15	2	18	18	70	1	27	30	74								
106 x 68	40.1	2	15	15	2	18	18	70	1	27	30	74								

NOTE: NL indicates no limit.

ROUND PIPE

Size In.	Area of Open'g Sq.Ft.	CLASS I Crack D Load 800			CLASS II Crack D Load 1000			CLASS III Crack D Load 1350				CLASS IV Crack D Load 2000				CLASS V Crack D Load 3000			
		Min.	Type (1)	Type (2)	Min.	Type (1)	Type (2)	Min.	Type (1)	Type (2)	Type (3)	Min.	Type (1)	Type (2)	Type (3)	Min.	Type (1)	Type (2)	Type (3)
12	0.8	3	8	9	3	11	14	3	40	NL	NL	2	NL	NL	NL	1	NL	NL	NL
15	1.2	3	8	9	3	11	14	3	30	NL	NL	2	60	NL	NL	1	NL	NL	NL
18	1.8	3	8	9	3	11	14	3	25	NL	NL	2	40	NL	NL	1	NL	NL	NL
21	2.4	3	8	9	3	11	14	2	20	30	44	1	30	NL	NL	1	NL	NL	NL
24	3.1	3	8	9	3	11	11	2	15	20	39	1	25	NL	NL	1	NL	NL	NL
30	4.9	3	8	9	3	11	11	2	15	20	35	1	23	NL	65	1	60	NL	NL
36	7.1	3	8	9	3	11	11	2	15	15	35	1	23	40	62	1	45	NL	NL
42	9.6	3	8	9	2	11	11	2	15	15	35	1	23	30	62	1	35	NL	NL
48	12.6	3	8	9	2	11	11	2	15	15	35	1	23	26	59	1	32	NL	100
54	15.9	3	8	9	2	11	11	2	15	15	35	1	23	24	59	1	32	60	95
60	19.6	3	8	9	2	11	11	2	15	15	35	1	23	23	57	1	32	48	90
66	23.8	3	8	9	2	11	11	2	15	15	35	1	23	23	57	1	32	47	85
72	28.3	3	8	9	2	11	11	2	15	15	35	1	23	23	57	1	32	43	85
78	33.2	3	8	9	2	11	11	2	15	15	35	1	23	23	57	1	32	43	85
84	38.5	3	8	9	2	11	11	2	15	15	35	1	23	23	57	1	32	43	85
90	44.2	3	8	9	2	11	11	2	15	15	34	1	23	23	56	1	32	43	85
96	50.3	3	8	9	2	11	11	2	15	15	33	1	23	23	54	1	32	43	80
102	56.7	3	8	9	2	11	11	2	15	15	31	1	23	23	52	1	32	43	80
108	63.6	3	8	9	2	11	11	2	15	15	30	1	23	23	50	1	32	43	80

GENERAL NOTES

All fill heights are measured in feet from finished grade to top of pipe.

Minimum fill heights shall be as noted except no pipe shall extend above subgrade.

For cases not covered hereon, special designs may be prepared.

Type refers to type of placement.

See Std. C-13.02.

DESIGN APPROVED

APPROVED FOR DISTRIBUTION

STATE OF ARIZONA
DEPARTMENT OF TRANSPORTATION
DIVISION OF HIGHWAYS
STANDARD DRAWINGS

REV

PIPE, REINF. CONC., FILL HEIGHTS

DRAWING NO. C-13.03

Round Pipe							
				Fill Height			
				Type 1 Install.		Type 2 Install.	
Class	I.D.	Minimum Wall Thickness	Min. Strength, #/L.F., 3-Edge Bearing	Max.	Min.	Max.	Min.
1	12"	1"	1800	11'	2'	8'	2'
	15"	1-1/4"	2000	10'	2'	8'	2'
	18"	1-1/2"	2200	9'	2'	7'	2'
	21"	1-3/4"	2400	8'	2'	7'	2'
	24"	2-1/8"	2600	8'	2'	6'	2'
2	12"	1-3/8"	2250	13'	2'	11'	2'
	15"	1-5/8"	2600	12'	2'	10'	2'
	18"	2"	3000	12'	2'	10'	2'
	21"	2-1/4"	3300	12'	2'	9'	2'
	24"	3"	3600	12'	2'	9'	2'
3	12"	1-3/4"	2600	15'	2'	12'	2'
	15"	1-7/8"	2900	13'	2'	11'	2'
	18"	2-1/4"	3300	13'	2'	11'	2'
	21"	2-3/4"	3850	13'	2'	11'	2'
	24"	3-1/4"	4400	13'	2'	11'	2'

GENERAL NOTES

All fill heights are from top of pipe to finished grade.

Minimum fill heights shall be as shown except no pipe shall extend above subgrade.

Type refers to type of placement. See Std. C-13.02.

Pipe shall be precast and installed in accordance with ASTM Specification C14-71.

DESIGN APPROVED	STATE OF ARIZONA DEPARTMENT OF TRANSPORTATION DIVISION OF HIGHWAYS STANDARD DRAWINGS	REV.
APPROVED FOR DISTRIBUTION	PIPE, NON-REINFORCED, FILL HEIGHTS	DRAWING NO. C-13.03.1

PIPE DIA.	APPROX. WEIGHT	DIMENSIONS - INCHES						APPROX. SLOPE
		T	A	B	C	E	F	
24	1520#	3	9½	43½	30	73½	48	3
27	1930#	3¼	10½	49½	24	73½	54	3
30	2190#	3½	12	54	19¾	73¾	60	3
36	4100#	4	15	63	34¾	97¾	72	3
42	5380#	4½	21	63	35	98	78	3
48	6550#	5	24	72	26	98	84	3
54	8240#	5½	27	65	33¼	98¼	90	2½

GENERAL NOTES

Design of end section shall conform to standards for reinforced concrete pipe.

End section joint conformation shall match the pipe joints.

Embankment slope shall be warped to match slope of end section.

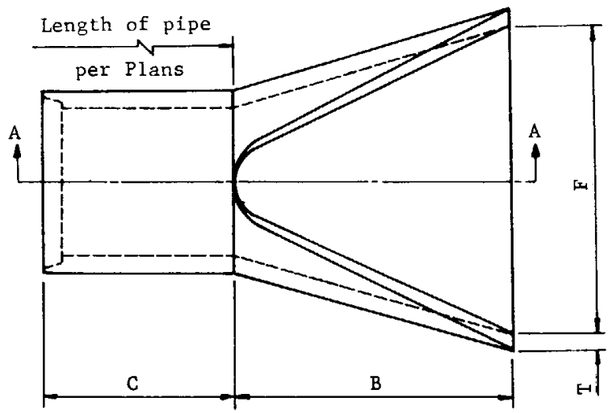

PLAN

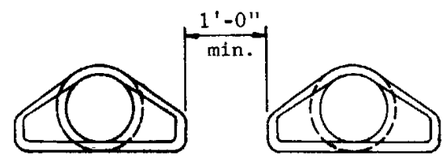

SPACING FOR MULTIPLE INSTALLATION

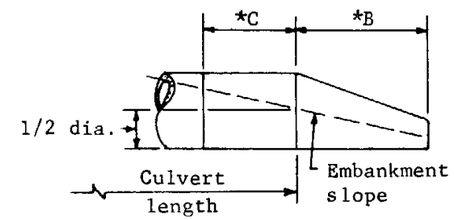

Right Angle Culvert

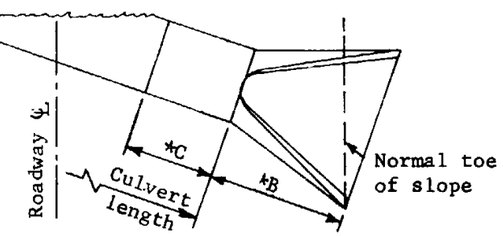

*See Table

Skewed Culvert

CULVERT LENGTH AS SHOWN ON PLANS

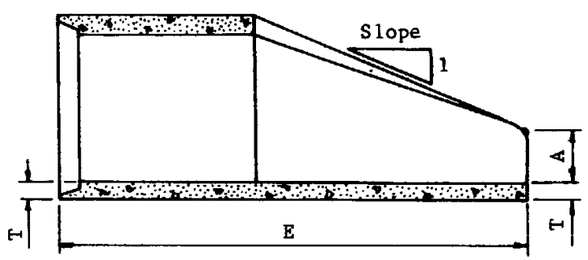

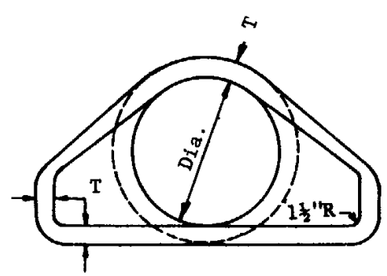

FRONT ELEVATION

DESIGN APPROVED	STATE OF ARIZONA DEPARTMENT OF TRANSPORTATION DIVISION OF HIGHWAYS STANDARD DRAWINGS	REV
APPROVED FOR DISTRIBUTION	PIPE, REINF. CONC. END SECTION	DRAWING NO. C-13.04

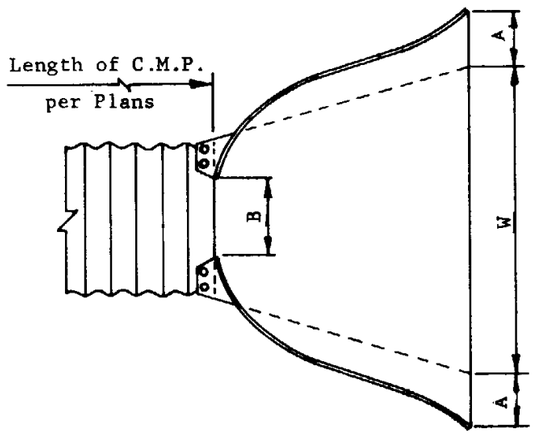

PIPE DIA.	GA.	DIMENSIONS - INCHES A ±1	B Max.	H ±1	L ±1½	W ±2	APPROX. SLOPE	CONNECTION TYPE
18"	16	8	10	6	31	36	2 1/2	1,2,3,4,5
24"	16	10	13	6	41	48	2 1/2	1,2,3,4,5
30"	14	12	16	8	51	60	2 1/2	1,2,4,5
36"	14	14	19	9	60	72	2 1/2	1,2,4,5
42"	12	16	22	11	69	84	2 1/2	1
48"	12	18	27	12	78	90	2 1/4	1
54"	12	18	30	12	84	102	2	1
60"	12,10	18	33	12	87	114	1 3/4	1
66"	12,10	18	36	12	87	120	1 1/2	1
72"	12,10	18	39	12	87	126	1 1/3	1
78"	12,10	18	42	12	87	132	1 1/4	1
84"	12,10	18	45	12	87	138	1 1/6	1

PIPE ARCH SPAN	RISE	GA.	DIMENSIONS - INCHES A ±1	B Max.	H ±1	L ±1½	W ±2	APPROX. SLOPE	CONNECTION TYPE
29"	18"	16	9	14	6	32	48	2 1/2	1,2,3,4,5
36"	22"	14	10	16	6	39	60	2 1/2	1,2,4,5
43"	27"	14	12	18	8	46	75	2 1/2	1,2,4,5
50"	31"	12	13	21	9	53	85	2 1/2	1
58"	36"	12	18	26	12	63	90	2 1/2	1
65"	40"	12	18	30	12	70	102	2 1/2	1
72"	44"	12	18	33	12	77	114	2 1/4	1

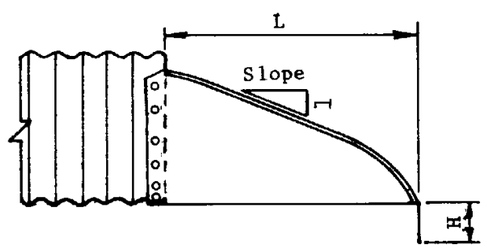

END SECTION DIMENSIONS
Showing Type 1 Riveted or Bolted Connections

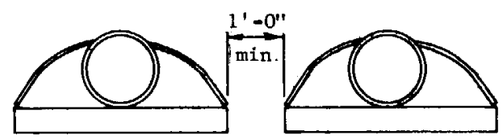

MULTIPLE INSTALLATION SPACING

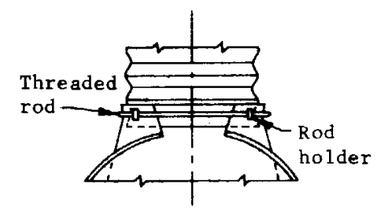

TYPE 2

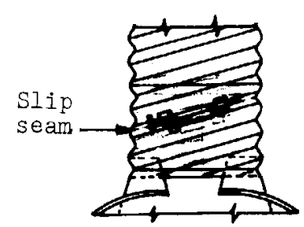

TYPE 5

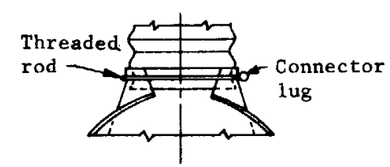

TYPE 3

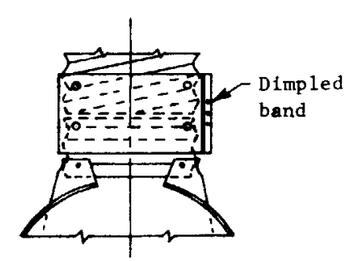

TYPE 4

GENERAL NOTES

The end section may be jointed to the pipe or connector section by bolts, rivets, dimpled bands, slip-seam bands or threaded rod type fasteners. For allowable connector types, see table.

The type 1 connector (far left) is by means of bolts or rivets. Maximum circumferential fastener spacing shall be 12" and with a minimum of 8 fasteners per joint. The Type 1 joint may be used with either annular or helical corrugations.

Type 2 and 3 connectors shall be used only with annular pipe or helical pipe with a requisite number of annular corrugations.

Type 4 and 5 connectors shall be used only with helical pipe.

All steel end section components shall be galvanized.

Toe of embankment shall be warped to match toe of skewed end sections.

A berm shall be added to abnormal projections per Std. C-13.01.

The foregoing applies to all cross section configurations.

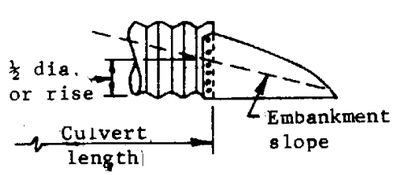

Right Angle Culvert

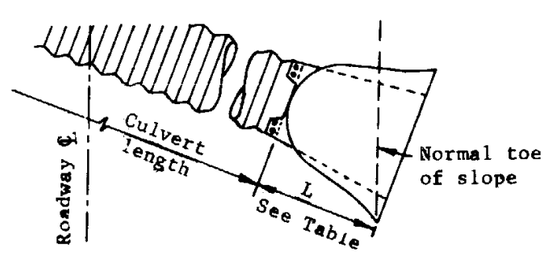

Skewed Culvert

CULVERT LENGTH AS SHOWN ON PLANS

DESIGN APPROVED	STATE OF ARIZONA DEPARTMENT OF TRANSPORTATION DIVISION OF HIGHWAYS STANDARD DRAWINGS	REV. 6/74
APPROVED FOR DISTRIBUTION	PIPE, CORR. METAL, END SECTION	DRAWING NO. C-13.05

TABLE I

CORRUGATED, CIRCULAR STEEL PIPE. 2-2/3" x 1/2" ANNULAR OR HELICAL CORRUGATIONS. RIVETED, WELDED OR LOCK SEAM FABRICATION. H-20 LOADING.

Dia. In.	14 Ga. - .075"				12 Ga. - .105"				10 Ga. - .135"				8 Ga.-.165"	
	4 1/2-Rivet/Ft		9 - Rivet/Ft.		4 1/2-Rivet/Ft		9 - Rivet/Ft.		4 1/2-Rivet/Ft		9 - Rivet/Ft		9 - Rivet/Ft	
	Min	Max	Min	Max	Min	Max	Min	Max	Min	Max	Min	Max	Min	Max
12	2	83												
15	2	66												
18	2	56			1	72								
24	2	41			1	48(54)								
30	2	33			1	37(43)								
36	2	28			1	32(36)			1	34(36)				
42			2	28(39)			2	29(58)			2	31(61)	2	32(64)
48			2	27(34)			2	28(54)			2	29(56)	2	30(59)
54			2	26(30)			2	27(48)			2	28(50)	2	28(52)
60							2	26(43)			2	27(45)	2	28(47)
66							2	26(39)			2	26(41)	2	27(43)
72											2	26(38)	2	26(39)
78											3		3	26(36)
84													3	26

14 Ga., 5/16" dia. rivets. 12, 10 and 8 Ga., 3/8" dia. rivets.

NOTE: Fill heights in parentheses are for 5% vertically elongated pipe.

TABLE II

CORRUGATED, CIRCULAR STEEL PIPE. 3" x 1" ANNULAR OR HELICAL CORRUGATIONS. RIVETED, WELDED OR LOCK SEAM FABRICATION. H-20 LOADING.

Dia. In.	8 - Rivet/Ft.									
	16Ga.-.060"		14Ga.-.075"		12Ga.-.105"		10Ga.-.135"		8Ga.-.165"	
	Min.	Max.	Min.	Max.	Min.	Max.	Min.	Max.	Min.	Max.
36	2	40	2	46(53)	1	56(81)	1	65(93)	1	75(98)
42	2	34	2	38(45)	1	44(70)	1	50(80)	1	56(84)
48	3	30	2	34(39)	1	38(61)	1	42(70)	1	46(74)
54	3	26	2	31(35)	1	34(54)	1	37(62)	1	40(65)
60	3	24	2	29(32)	2	31(49)	2	33(56)	1	36(59)
66	3	22	3	28(29)	2	30(44)	2	31(51)	2	33(53)
72	3	20	3	26	2	29(41)	2	30(47)	2	31(49)
78	3	18	3	24	2	28(38)	2	29(43)	2	30(45)
84			3	23	2	27(35)	2	28(40)	2	29(42)
90			3	21	3	27(33)	3	27(37)	3	28(39)
96					3	26(31)	3	27(35)	3	27(37)
102					3	26(29)	3	27(33)	3	27(35)
108					3	26(27)	3	26(31)	3	27(33)
114							3	26(29)	3	26(31)
120							3	26(28)	3	26(29)

16 and 14 Ga., 3/8" dia. rivets. 12, 10 and 8 Ga., 7/16" dia. rivets

TABLE III

CORRUGATED, CIRCULAR STRUCTURAL PLATE STEEL PIPE. 6" x 2" CORRUGATIONS. BOLTED FABRICATION. H-20 LOADING

Dia. In.	4 - bolts/ft.														6-bolts/ft.		8-bolts/ft.	
	12Ga.-.105"		10Ga.-.135"		8Ga.-.165"		7Ga.-.179"		5Ga.-.209"		3Ga.-.239"		1Ga.-.269"		1Ga.-.269"		3/8" Ga.	
	Min.	Max.	Min.	Max.	Min.	Max.	Min.	Max.	Min.	Max.	Min.	Max.	Min.	Max.	Min.	Max.	Min.	Max.
60	1	39	1	57	1	66(75)	1	71(84)	1	79(103)	1	88(121)	1	96(133)	1	96(169)	1	125(248)
72	1	32	1	44(48)	1	49(62)	1	52(70)	1	56(86)	1	61(101)	1	66(110)	1	66(132)	1	83(165)
84	1	28	1	37(41)	1	40(53)	1	42(60)	1	45(74)	1	48(87)	1	51(95)	1	51(101)	1	61(122)
96	2	24	2	33(36)	2	35(47)	2	36(52)	2	38(64)	2	40(76)	2	42(83)	2	42(84)	2	49(98)
108	2	21	2	31(32)	2	32(41)	2	33(46)	2	34(57)	2	36(67)	2	37(74)	2	37(74)	2	42(84)
120	2	19	2	29	2	30(37)	2	31(42)	2	32(51)	2	33(61)	2	34(66)	2	34(67)	2	37(75)
132	3	18	3	26	3	29(34)	3	29(38)	3	30(47)	3	31(55)	3	31(60)	3	31(63)	3	34(68)
144	3	16	3	24	3	28(31)	3	28(35)	3	29(43)	3	29(51)	3	30(55)	3	30(60)	3	32(64)
156	3	15	3	22	3	27(29)	3	27(32)	3	28(40)	3	28(47)	3	29(51)	3	29(58)	3	30(61)
168	3	14	3	20	3	27	3	27(30)	3	27(37)	3	28(43)	3	28(47)	3	28(56)	3	29(59)
180	3	13	4	19	3	25	3	27(28)	3	27(34)	3	27(40)	3	27(44)	3	27(55)	3	28(57)
192			4	18	3	23	3	26	3	26(32)	3	27(38)	3	27(41)	3	27(53)	3	28(56)
204			4	17	4	22	4	25	4	26(30)	4	26(36)	4	27(39)	4	27(50)	4	27(55)
216					4	21	4	23	4	26(29)	4	26(34)	4	26(37)	4	26(47)	4	27(54)
228					4	20	4	22	4	26(27)	4	26(32)	4	26(35)	4	26(45)	4	27(53)
240							4	21	4	26	4	26(30)	4	26(33)	4	26(42)	4	26(53)
252									4	25	4	26(29)	4	26(31)	4	26(38)	4	26(52)

Bolts used for 3/8" Ga. shall be 7/8" dia.; all others 3/4" dia.. Bolts shall be torqued to manufacturer's specifications but not less than 100 ft. lbs. or more than 300 ft. lbs.

GENERAL NOTES

All fill heights are measured, in feet, from finished grade to top of pipe.

Minimum fill heights shall be as noted except no pipe shall **extend** above subgrade.

Fill heights above 100' shall be used only after a thorough investigation of the foundation and backfill material.

All corrugated steel pipe and appurtenant parts shall be galvanized.

For installation details, See Std. C-13.01

For fill height design data, See Std. C-13.07.

DESIGN APPROVED

APPROVED FOR DISTRIBUTION

STATE OF ARIZONA
DEPARTMENT OF TRANSPORTATION
DIVISION OF HIGHWAYS
STANDARD DRAWINGS

REV 4/73

PIPE, CORR. METAL, FILL HEIGHTS

DRAWING NO. C-13.06

Gage	2 2/3" X 1/2" Corrugations A_s	I	r	1 rivet	2 rivet	3" X 1" Corrugations A_s	I	r	C_u 2-5/16 rivets	2-3/8 rivets	2-7/16 rivets	6" X 2" Corrugations A_s	I	r	C_u 4-bolts ft.	6-bolts ft.	8-bolts ft.
16	.0646	.001892	.1726	16750	21500	.0742	.008658	.3452	19200	25800							
14	.0808	.002392	.1726	18200	29800	.0927	.010833	.3452	26500	34300							
12	.1130	.003425	.1726	23400	46800	.130	.015458	.3452		41600	53000	.1297	.060416	.688	42000		
10	.1454	.004533	.1726	24500	49000	.1674	.020175	.3452		43500	61000	.1669	.078166	.688	62000		
8	.17775	.005725	.1726	25600	51300	.2048	.025083	.3452		45600	64000	.2041	.096166	.688	81000		
7												.2283	.1078	.688	93000		
5												.2666	.126916	.688	112000		
3												.3048	.146166	.688	132000		
1												.3432	.165833	.688	144000	184000	220000
												.4680	.232	.688			270000 ◐

◐ 7/8" bolts. All other 6" X 2" C_u values are for 3/4" bolts.

Criterion 1. DEFLECTION OF PIPE

Formula* 1(a) $I \text{(for circular pipe)} = \dfrac{2.31\ R^3h - 57.3\ R^3}{26{,}800{,}000}$

Formula 1(b) I(for 5% vertically elongated pipe)=Substitute h/2 for h in 1a. Solve 1a for I and determine required gauge and corrugation from table. If 6" X 2" corrugation is indicated, solve for I in 1(b) to determine gauge required for elongated pipe. If I is negative, metal thickness required is less than the minimum tabular value.

Criterion 2. LONGITUDINAL SEAM STRENGTH

Formula 2(a) $C_a = \dfrac{Dh}{0.0046}$

Solve for C_a and determine gauge and corrugation from table of C_u values.

Criterion 3. BUCKLING OF PIPE WALL

Formula* 3(a) $f_u = 45{,}000 - 1.4547 \left[\dfrac{0.64\ R}{r}\right]^2$

Use r for the corrugation corresponding to the heaviest gauge determined by formulae 1a, 1b and 2a. Solve for f_u to determine the maximum allowable buckling stress.

Formula 3(b) $A_s = \dfrac{1.805\ Rh}{f_u}$

Solve for A_s, using f_u value determined in 3a, and select gauge and corrugation from table.

* When Deflection or Buckling is the control, an increase in the maximum h may be realized by backfilling to 95% Proctor density. This revises the applicable formulae to:

Formula 1(a) $I = \dfrac{2.08\ R^3h - 57.3\ R^3}{26{,}800{,}000}$

Formula 3(a) $f_u = 45{,}000 - 1.4547 \left[\dfrac{0.44\ R}{r}\right]^2$

EXAMPLE

Given: h = 27; D = 15; R = 90

Find: Gauge and corrugation required.

Solution:

Deflection of pipe

Formula 1(a) $I = \dfrac{(2.31)(729{,}000)(27) - (57.3)(729{,}000)}{26{,}800{,}000} = 0.138$

I values in table indicate a gauge requirement, for circular pipe, of 5 in 6" X 2" corr.

Formula 1(b) $I = \dfrac{(1.155)(729{,}000)(27) - (57.3)(729{,}000)}{26{,}800{,}000} = -0.711$

The result being negative indicates a gauge requirement lighter than 12 gauge when pipe is elongated 5% vertically.

Longitudinal Seam Strength

Formula 2(a) $C_a = \dfrac{(15)(27)}{0.0046} = 88{,}000$

Referring to table, 7 gauge, 6" X 2" corr. is required.

Buckling of Pipe Wall

Formula 3(a) $f_u = 45{,}000 - 1.4547 \left[\dfrac{(0.64)(90)}{.688}\right]^2 = 34820$

Note that since a 6" X 2" corr. is indicated by the preceding results, the 6" X 2" value for r is used.

The result (allowable buckling stress) is used in the following formula 3(b) to determine gauge requirement.

Formula 3(b) $A_s = \dfrac{(1.805)(90)(27)}{34820} = 0.126$

The table indicates a gauge requirement of 12 gauge in 6" X 2" corr.

Analysis: Using vertically elongated pipe, the lightest gauge and corr. that will satisfy all requirements is 7 gauge, 6" X 2" corr. Similarly, with circular pipe the lightest gauge is 5. Since cost-wise the two are comparable, 7 ga., 6" X 2" 5% vertically elongated pipe is selected.

Criteria 1, 2 and 3 embody the factors to be investigated in the design of corrugated metal pipe culverts.

Appurtenant formulae are developed from data supplied by the B.P.R. 1966 publication titled "Corrugated Metal Pipe Culverts - Structural Design Criteria and Recommended Installation Practices." These formulae provide safety factors as follows: Criteria 1 = 3.33; Criteria 2 = 3.33 and Criteria 3 = 2.00.

Constants used are:
Embankment weight/cu. ft. = 130 lbs.
Embankment density = 90% Proctor.
Modulus of passive earth resistance = 1000 p.s.i.
Soil stiffness coefficient = 0.32.
Deflection lag factor = 1.39.
Modulus of elasticity = 29,000,000 p.s.i.

Explanation of symbols used:
A_s = Area/lin. inch of pipe in sq. inches.
C_a = Actual ring compression in lb./ft.
C_u = Allowable ring compression in lb./ft.
D = Pipe diameter in ft.
f_a = Actual buckling stress in p.s.i.
f_u = Allowable buckling stress in p.s.i.
h = Fill height; fin. grade to top of pipe in ft.
I = Moment of inertia of pipe wall in inches^4/ inch.
R = Radius of pipe in inches.
r = Radius of gyration of pipe wall in inches.

DESIGN APPROVED	STATE OF ARIZONA DEPARTMENT OF TRANSPORTATION DIVISION OF HIGHWAYS STANDARD DRAWINGS	REV 12/68
APPROVED FOR DISTRIBUTION	PIPE, CORR. METAL, FILL HEIGHT DESIGN DATA	DRAWING NO. C-13.07

TABLE 1-A

CORRUGATED, STEEL PIPE ARCH. 2 2/3" X 1/2" CORRUGATIONS. RIVETED, WELDED OR LOCK SEAM FABRICATION. H-20 LOADING

Size - In. Span X Rise	Opening Area Sq. Ft.	Corner Radius In.	Fill Heights - Ft. Maximum Corner Pressure = 4000 Lb./Sq. Ft.							
			14 Ga.-.079"		12 Ga.-.109"		10 Ga.-.138"		8 Ga.-.168"	
			Min.	Max.	Min.	Max.	Min.	Max.	Min.	Max.
18 X 11	1.1	3.5	1 1/2	12	1 1/2	12	1 1/2	12	1 1/2	12
22 X 13	1.6	4.0	1 1/2	11	1 1/2	11	1 1/2	11	1 1/2	11
25 X 16	2.2	4.0	2	10	2	10	2	10	2	10
29 X 18	2.8	4.5	2	10	2	10	2	10	2	10
36 X 22	4.4	5.0	2	9	2	9	2	9	2	9
43 X 27	6.4	5.5	2	8	2	8	2	8	2	8
50 X 31	8.7	6.0	3	7	3	7	3	7	3	7
58 X 36	11.4	7.0	3	7	3	7	3	7	3	7
65 X 40	14.3	8.0			3	8	3	8	3	8
72 X 44	17.6	9.0					4	8	4	8

GENERAL NOTES

All fill heights are measured from finished grade to top of pipe arch.

Minimum fill heights shall be as noted, except no pipe arch shall extend above the subgrade.

To determine fill heights for sizes other than those shown in the tables, use Std. C-13.09 Pipe Arch Design Data.

TABLE 2-A

STRUCTURAL PLATE PIPE ARCH. 6" X 2" Corrugations.
BOLTED FABRICATION, 4-BOLTS/FT. * H-20 LOADING

Size Span & Rise	Opening Area Sq. Ft.	Corner Radius In.	Fill Heights - Ft. Max. Corner Pressure= 4000 Lb./Sq. Ft.							
			12 Ga.		10 Ga.		8 Ga.		7 Ga.	
			Min.	Max.	Min.	Max.	Min.	Max.	Min.	Max.
6'- 1" X 4'-7"	22	18	1	15	1	15	1	15	1	15
7'- 0" X 5'-1"	28	18	1 1/2	13	1 1/2	13	1 1/2	13	1 1/2	13
7'-11" X 5'-7"	35	18	1 1/2	12	1 1/2	12	1 1/2	12	1 1/2	12
8'-10" X 6'-1"	43	18	1 1/2	10	1 1/2	10	1 1/2	10	1 1/2	10
9'- 9" X 6'-7"	52	18	2	9	2	9	2	9	2	9
10'-11" X 7'-1"	61	18	2	8	2	8	2	8	2	8
11'-10" X 7'-7"	71	18			2	7	2	7	2	7
12'- 8" X 8'-1"	81	18			3	6	3	6	3	6

* Bolts shall be torqued to manufacturers specifications but not less than 100 ft. lbs. nor greater than 300 ft. lbs

DESIGN APPROVED	STATE OF ARIZONA DEPARTMENT OF TRANSPORTATION DIVISION OF HIGHWAYS STANDARD DRAWINGS	REV. 1/71
APPROVED FOR DISTRIBUTION	PIPE, CORR. METAL ARCH, FILL HEIGHTS	DRAWING NO. C-13.08

TABLE I											
2 2/3" X 1/2" Corrugations						6" X 2" Corrugations					
				C_u					C_u		
Gage	A_s	I	r	1 rivet	2 rivet	A_s	I	r	4-bolts ft.	6-bolts ft.	8-bolts ft.
16	.0646	.001892	.1726	16750	21500						
14	.0808	.002392	.1726	18200	29800						
12	.1130	.003425	.1726	23400	46800	.1297	.060416	.688	42000		
10	.1454	.004533	.1726	24500	49000	.1669	.078166	.688	62000		
8	.17775	.005725	.1726	25600	51300	.2041	.096166	.688	81000		
7						.2283	.1078	.688	93000		
5						.2666	.126916	.688	112000		
3						.3048	.146166	.688	132000		
1						.3432	.165833	.688	144000	184000	220000

TABLE II			
h or h'	L_L	L_D	L_L+L_D
1'	1800	130	1930
2'	800	260	1060
3'	600	390	990
4'	400	520	920
5'	250	650	900
6'	200	780	980
7'	175	910	1085
8'	100	1040	1140

For h=9' and over, L_L is eliminated so total load then becomes h X 130.

Criterion I CORNER PRESSURE

Formula 1 (a) $P = \frac{6S(L_L + L_D)}{R_c}$

Using h, take $(L_L + L_D)$ from Table II and solve for P. Note: If P>4000, consideration shall be given toward possible special back fill design.

Formula 1 (b) $(L_L + L_D) = \frac{667R_c}{S}$

Solve for $L_L + L_D$. Use Table II to determine h'.

Criterion 2 LONGITUDINAL SEAM STRENGTH.

Formula 2 $C_a = 1.67S\ (L_L + L_D)$

Using h, take $(L_L + L_D)$ from Table II and solve for C_a. Determine gauge and corr. by comparing C_a with C_u values in Table I.

Criterion 3 BUCKLING OF PIPE ARCH WALL

Formula 3 (a) $f_u = 22500 - 0.72735\ (3.84S/r)^2$

Formula 3 (b) $f_u = \frac{S(L_L + L_D)}{24A_s}$

Use r for corrugation indicated by Formula 2
Equate f_u from 3(a) in 3(b) and solve for A_s
Determine gauge and corrugation from Table I.

Criterion 4 DEFLECTION

Formula 4(a) $\Delta_u = 0.6H$

Formula 4(b) $\Delta_a = \frac{1.507hSR^3}{29{,}000{,}000\ I + 61R^3}$

Use value I of heaviest gauge and corrugation required by Criteria 2 and 3. If $\Delta_u > \Delta_a$, deflection is satisfactory.

EXAMPLE:

Given: 72" X 44" Pipe Arch, h = 15, R_c = 9.

Find: Gauge, corrugation, h'

Formula 1(a) $P = \frac{6 \times 6 \times 1950}{9}$

$= 7800$

Since P> 4000 investigation of special backfill and/or corner support design is mandatory.

Formula 1(b) $(L_L + L_D) = \frac{667 \times 9}{6}$

$= 1000$

From Table II, h' = 3

Formula 2 $C_a = 1.67 \times 6 \times 1950$
$= 19550$

Referring to Table I, 12 ga., 1-rivet, 2 2/3" X 1/2" is satisfactory with respect to seam strength

Formula 3(a) $f_u = 22500 - 0.72735 \times (3.84 \times 6/.1726)^2$
$= 9620$

Formula 3(b) $9620 = \frac{6 \times 1950}{24A_s}$

$A_s = 0.0507$

Referring to Table I, value of A_s indicates a lighter gauge than that called for in Formula 2 so 12 ga., 1-rivet, 2 2/3" X 1/2" is safe from buckling.

Formula 4 (a) $\Delta_u = 0.6 \times 3.67$
$= 2.202$

$\Delta_a = \frac{1.507 \times 15 \times 6 \times (3 \times 6 + 3 \times 3.67)^3}{29{,}000{,}000 \times 0.003425 + 61 \times (3 \times 6 + 3 \times 3.67)^3} = 2.08$

$\Delta_u > \Delta_a$ so deflection is satisfactory.

Criteria 1, 2, 3 and 4 embody the factors to be investigated in the design of corrugated metal pipe arch culverts.

Appurtenant formulae are condensed from data supplied by the 1967 edition of American Iron and Steel Institute's publication titled "Handbook of Steel Drainage and Highway Construction Products" and the B. P. R. 1966 publication titled "Corrugated Metal Pipe Culverts - Structural Design Criteria and Recommended Installation Practices." These formulae provide safety factors of 1, 3.33, 2 and 3.33 respectively for Criteria 1, 2, 3 and 4.

Constants used are the same as for Std. C-13.07, "Corrugated Metal Pipe Fill Height Design Data."

Explanation of variable symbols used:

A_s = Area per lin. inch of pipe arch in sq. in.
C_a = Actual ring compression in lbs./ft.
C_u = Allowable ring compression in lbs./ft.
f_u = Allowable buckling stress in p.s.i.
h = Max. fill height; fin. grade to top of pipe arch.
h' = Min. fill height; fin. grade to top of pipe arch.
I = Moment of inertia of pipe arch wall in $inches^4$/ inch
R = 3H+3S in inches
r = Radius of gyration of pipe wall in inches.
Δ_u = Allowable deflection in inches.
Δ_a = Actual deflection in inches
S = Span in ft.
H = Rise in ft.
R_c = Corner radius in inches
P = Corner pressure in lbs./sq.ft.

DESIGN APPROVED
APPROVED FOR DISTRIBUTION

STATE OF ARIZONA
DEPARTMENT OF TRANSPORTATION
DIVISION OF HIGHWAYS
STANDARD DRAWINGS

REV. 12/68

PIPE, CORR. METAL ARCH, FILL HEIGHT DESIGN DATA

DRAWING NO. C-13.09

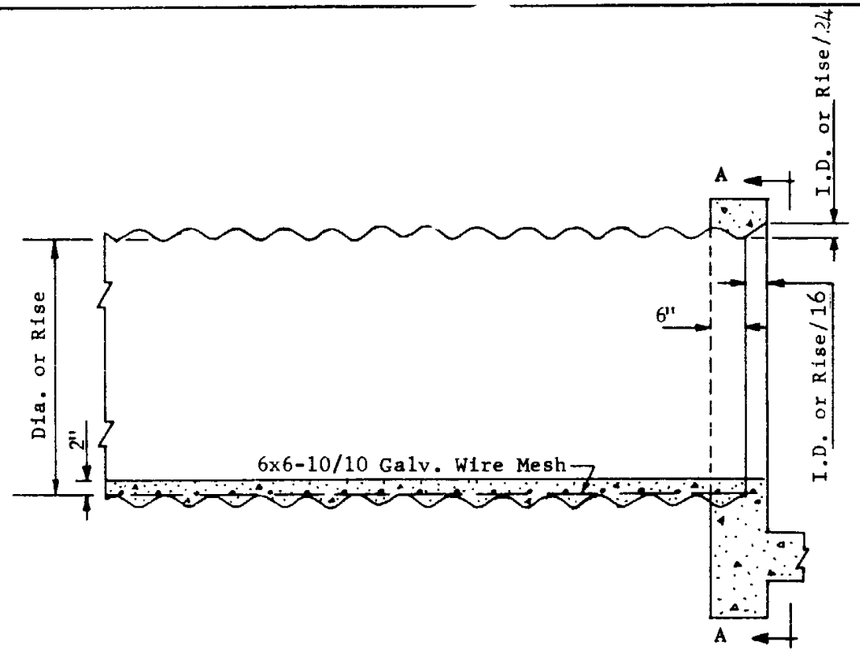

HEADWALL INSTALLATION

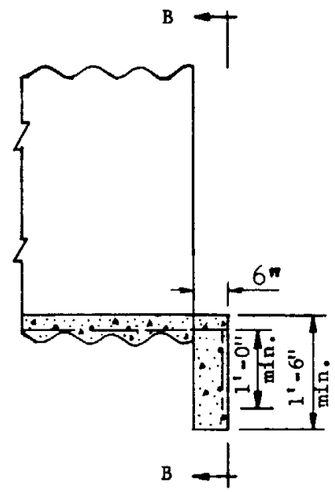

PROJECTING INSTALLATION

GENERAL NOTES

For lateral dimension of invert paving, use 72° control for CMP and span for CMPA.

Paving shall be scored longitudinally at 1'-6" min. lateral intervals.

Use bevel on inlet headwall only.

Wire mesh shall be fastened or welded to corrugation crests at intervals and in a manner approved by the Engineer. Laps shall be 6" min.

Paving shall not be placed until backfilling is completed.

Concrete shall conform to the requirements of the specifications.

See Std. C-14.02 for headwall and bevel dimensions not shown.

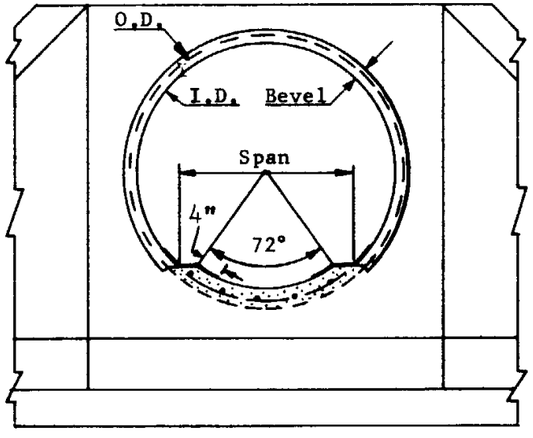

Elevation A-A

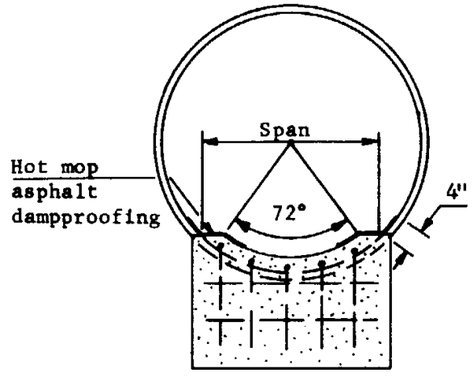

Elevation B-B

DESIGN APPROVED	STATE OF ARIZONA DEPARTMENT OF TRANSPORTATION DIVISION OF HIGHWAYS STANDARD DRAWINGS	REV. 6/74 11/74
APPROVED FOR DISTRIBUTION	PIPE & PIPE ARCH, CORR. METAL, CONC. INV. PAVING	DRAWING NO. C-13.10

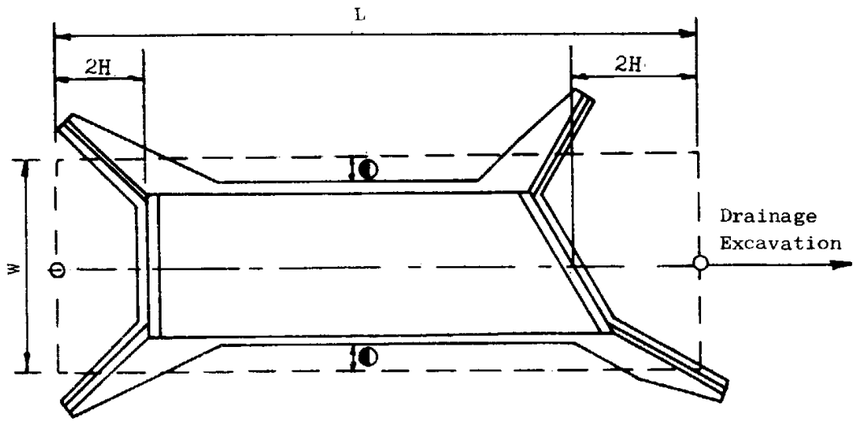

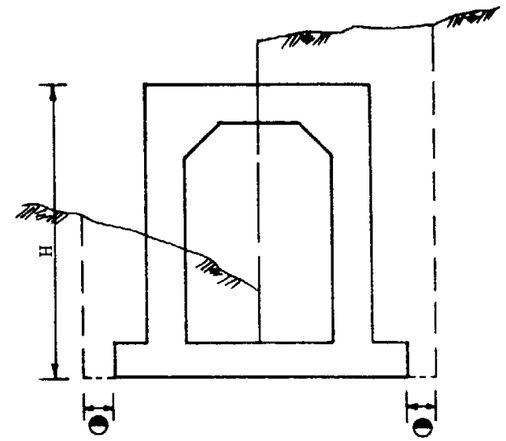

Concrete Box Culvert

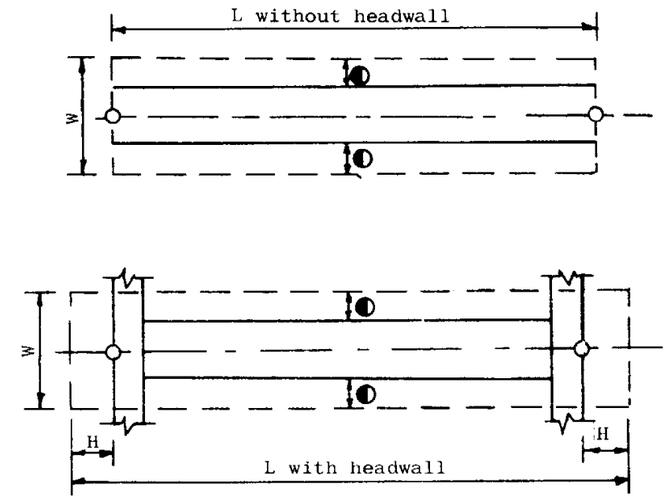

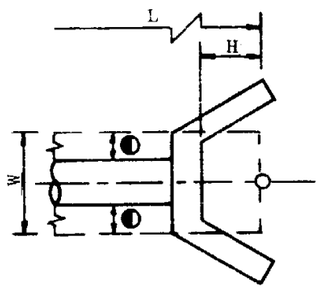

Pipe with normal wingwall, flaired end section, U headwall

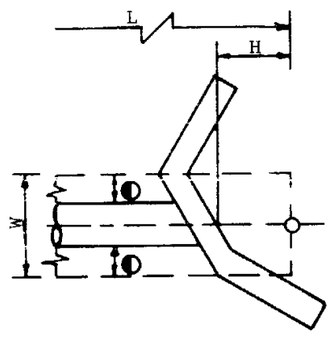

Skewed Headwall

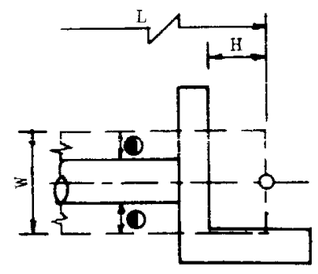

L Headwall

GENERAL NOTES

Payment limits shown include structural excavation for headwalls, cutoff walls, wingwalls, end sections, etc..

Payment limits shown for multiple pipe installations shall be applied to the full width of the excavated trench allowable for structural excavation.

W Width
L Length
H Height of barrel or headwall w/o cutoff wall.

▲ See Std. C-13.01, C-13.02
C-13.04, C-13.05

● 6" max. in rock & trench
1'-6" max. all others

◩ 6" max. for pipe in trench.
3" max. for pipe on natural ground.
1'-0" max. for pipe on solid rock or other unyielding material.

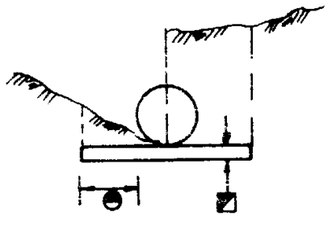

C.M.P.

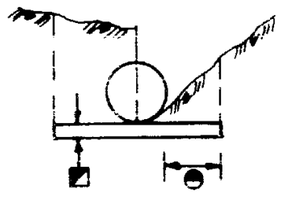

Concrete Pipe

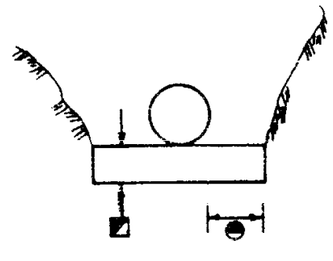

Pipe in Rock

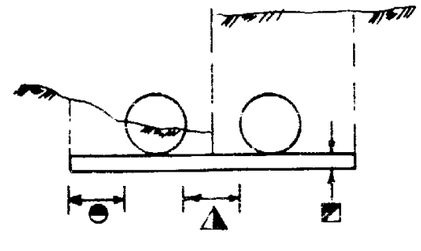

Multiple Pipe Installation

DESIGN APPROVED	STATE OF ARIZONA DEPARTMENT OF TRANSPORTATION DIVISION OF HIGHWAYS STANDARD DRAWINGS	REV 6/74
APPROVED FOR DISTRIBUTION	Struc. Exc. Payment Limits Pipes, Culverts & Headwalls	DRAWING NO. C-13.11

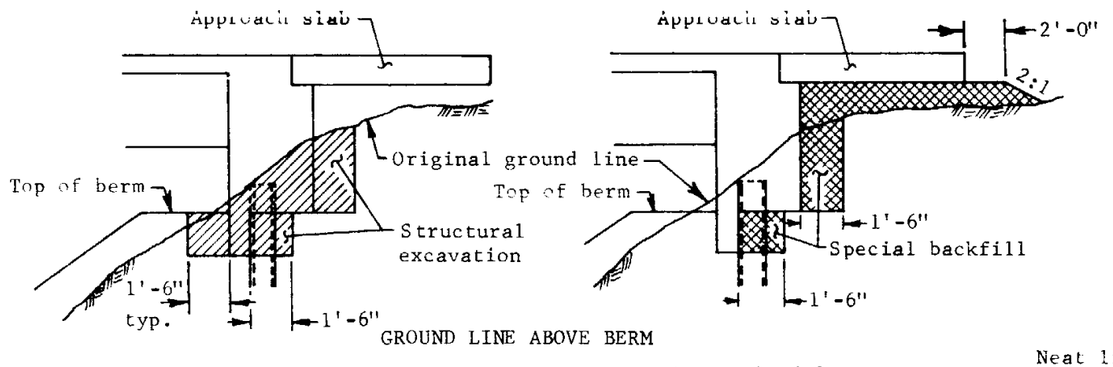

GROUND LINE ABOVE BERM

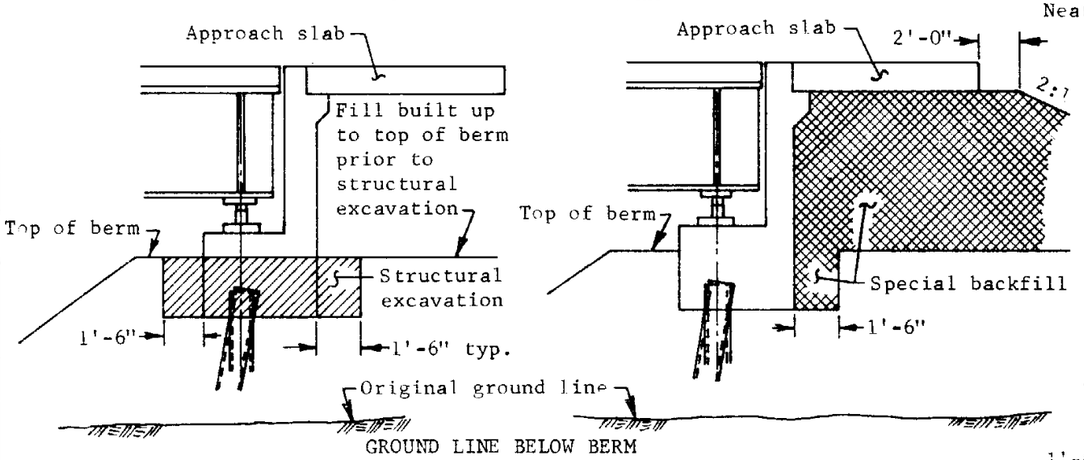

GROUND LINE BELOW BERM

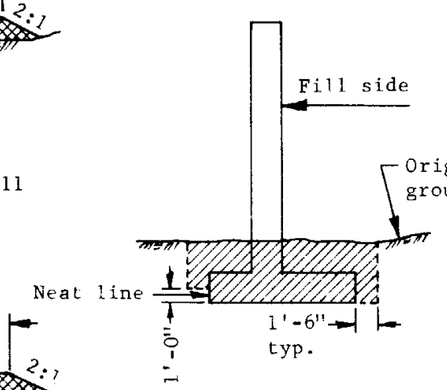

STRUCTURAL EXCAVATION
(Typical)

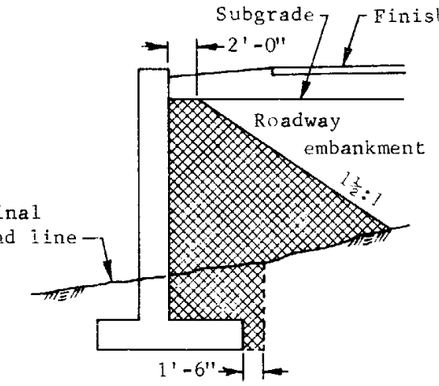

SPECIAL BACKFILL
(Roadway)

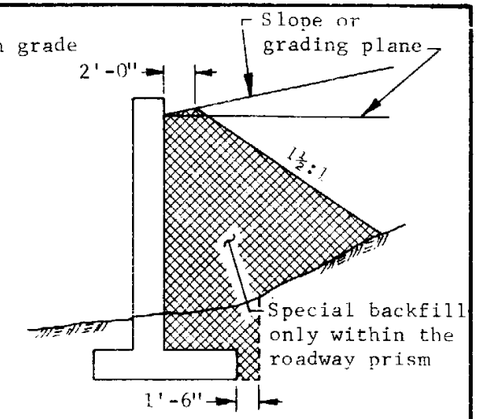

SPECIAL BACKFILL
(Wingwalls etc.)

RETAINING WALLS

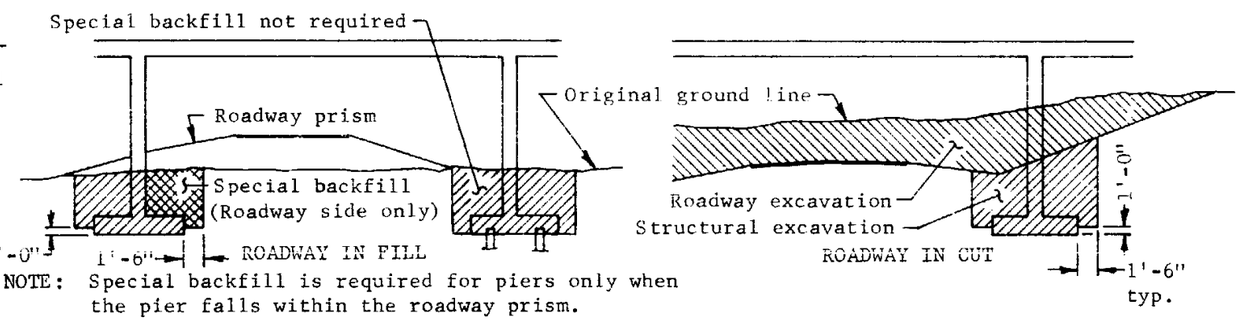

NOTE: Special backfill is required for piers only when the pier falls within the roadway prism.

LONGITUDINAL SECTIONS THRU BRIDGE

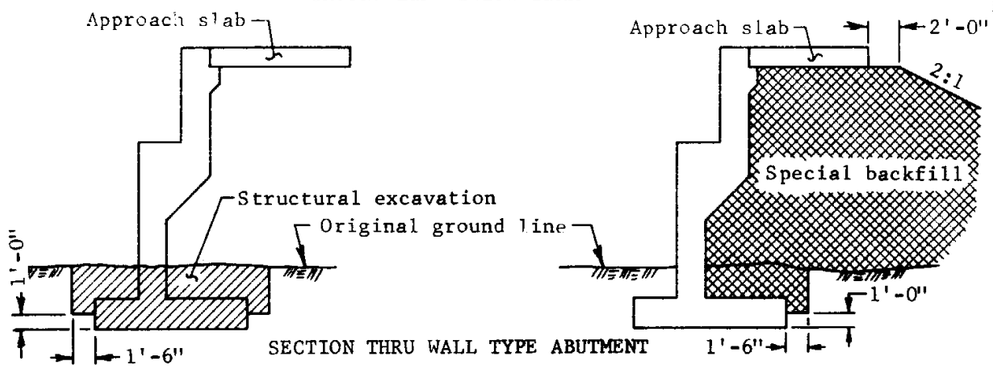

SECTION THRU WALL TYPE ABUTMENT

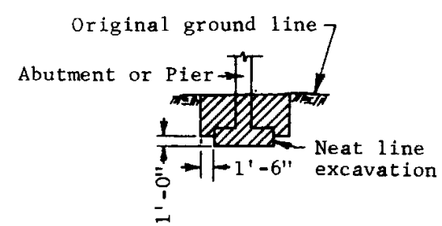

SECTION THRU TYPICAL
SPREAD FOOTING

NOTE: For any footing on piles do not use Neat Line Excavation.

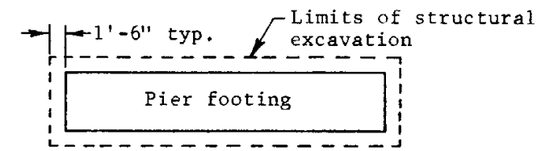

PIER FOOTING PLAN
(Showing Limits of Structural Excavation)

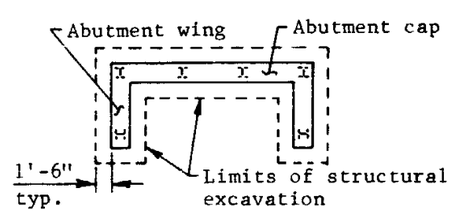

TYPICAL ABUTMENT FOOTING PLAN
(Showing Limits of Structural Excavation)

STRUCTURAL EXCAVATION
FOR ABUTMENTS

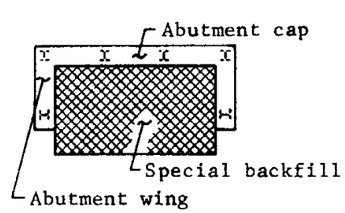

ABUTMENT PLAN
(Showing Limits of Special Backfill)

SPECIAL BACKFILL FOR ABUTMENTS

DESIGN APPROVED	STATE OF ARIZONA DEPARTMENT OF TRANSPORTATION DIVISION OF HIGHWAYS STANDARD DRAWINGS	REV
APPROVED FOR DISTRIBUTION	Struc. Exc. Payment Limits Spec. Backfill Placement	DRAWING NO. C-13.12

PLACEMENT ONLY (SEE STD. C-13.14 FOR MEASUREMENT)

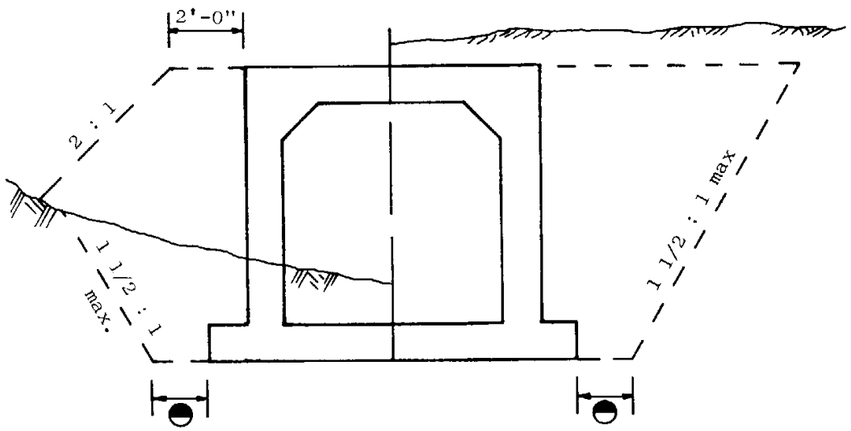

BARREL SECTION

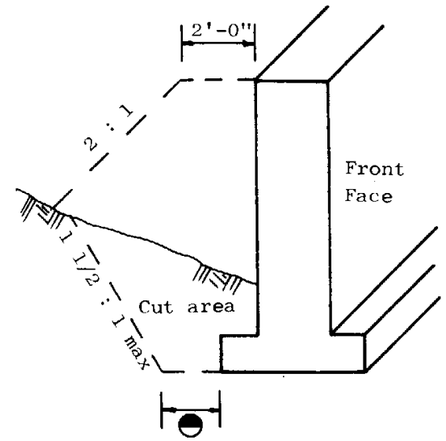

END VIEW WING OF BOX CULVERT

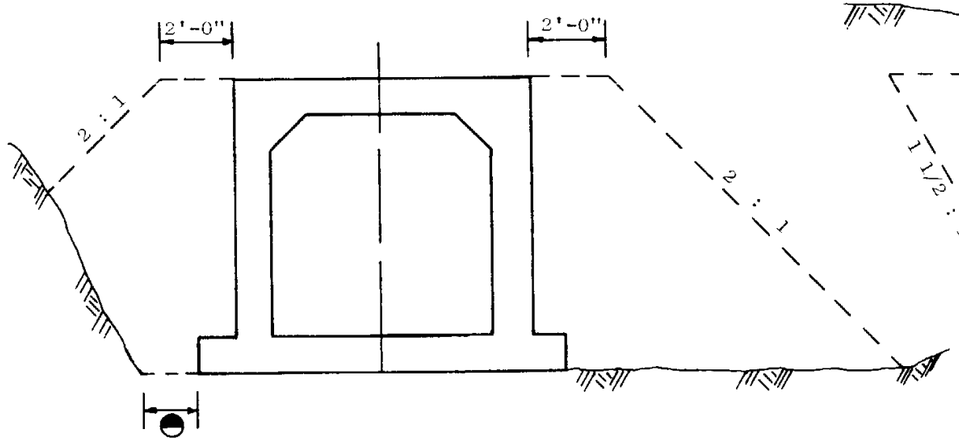

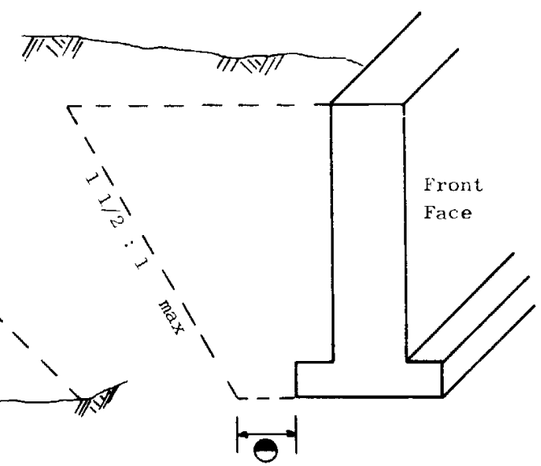

GENERAL NOTES

Bedding material placed for C.M.P. or pipe culvert on natural ground installation shall be a minimum of 3" below invert. When placed in trench bedding material shall be a minimum of 6" below invert.

Bedding material shall be placed to spring line on both sides of pipe.

Placement of special backfill around headwalls and wingwalls shall be the same as around structures.

▲ See Std. C-13.01, C-13.02, C-13.04, C-13.05

◪ D/2 + 2'-0"

◓ 6" min. in rock & trench, 1'-6" min. all others

■ 6" min. for pipe in trench.
3" min. for pipe on natural ground.
1'-0" min. for pipe on solid rock or other unyielding material.

▒ Bedding Material

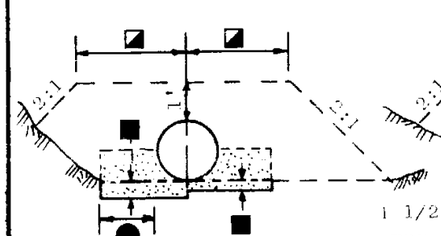

C.M.P.

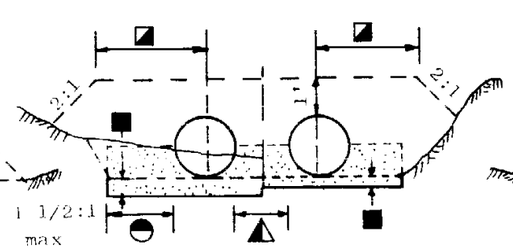

MULTIPLE PIPE INSTALLATION

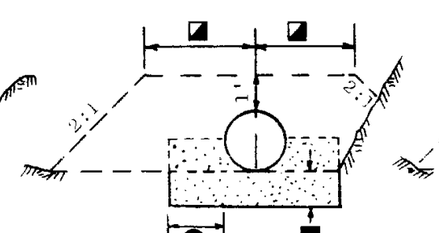

CONCRETE PIPE IN ROCK

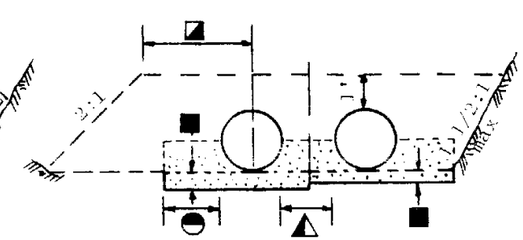

MULTIPLE PIPE INSTALLATION

DESIGN APPROVED	STATE OF ARIZONA DEPARTMENT OF TRANSPORTATION DIVISION OF HIGHWAYS STANDARD DRAWINGS	REV. 2/73
APPROVED FOR DISTRIBUTION	Special Backfill Placement Pipes, Culverts & Headwalls	DRAWING NO. C-13.13

MEASUREMENT ONLY (SEE STD. C-13.13 FOR PLACEMENT)

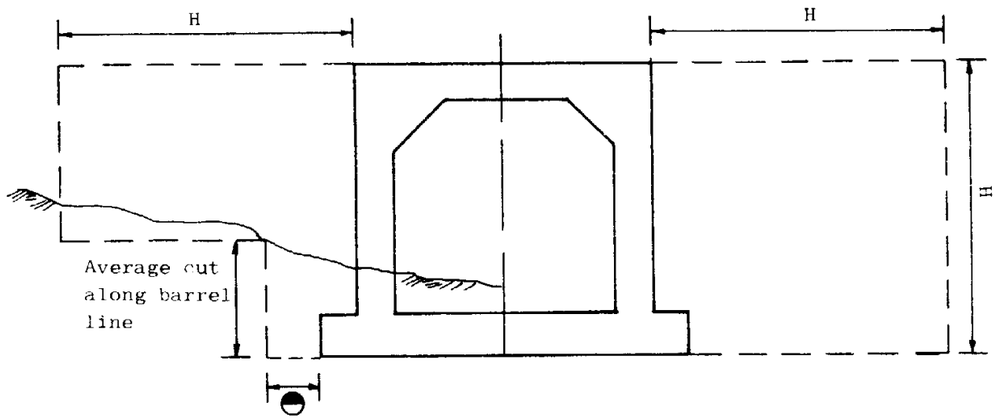

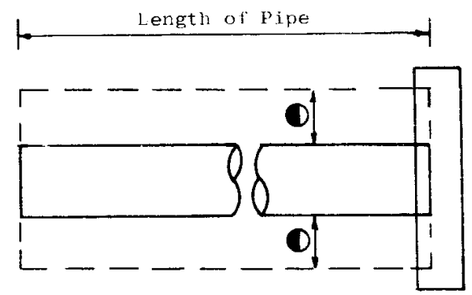

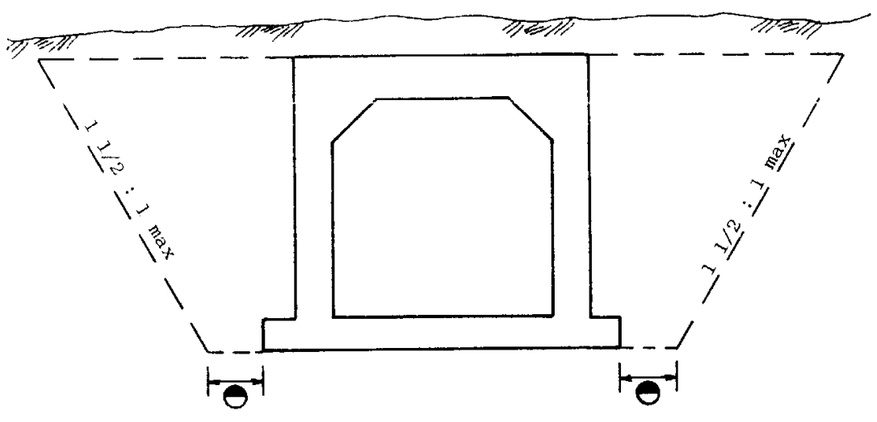

C.M.P.

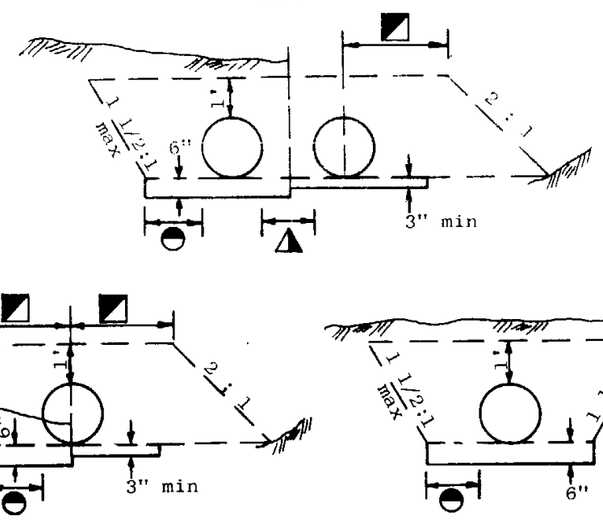

R.C.P.

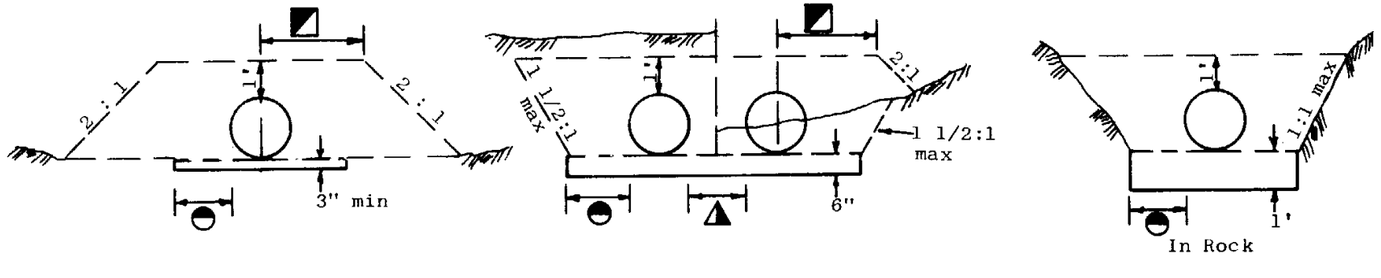

NOTE: Computation of Special Backfill quantity for box culvert is based on the area of a typical installation times (the total length of the structure plus 2H). No measurement is necessary for wing areas. Use H for box extensions on each end extended.

GENERAL NOTES

Measurement limits for multiple pipe installations will be taken from outside to outside limits of allowable structural excavation.

Pipe installation backfill shall be computed based on total as installed length of pipe. When, headwall or end sections are installed an allowance of H/2 will be added to the total length of pipe for each end section or headwall installed

Diameters are O.D. & maximum outside width of circular and arch type structures respectively.

H Height of barrel or headwall w/o cutoff wall.

◪ D/2 + 2' - 0"

◓ 6" max. in rock & trench
1'-6" max. all others

◭ See Std. C-13.01 C.M.P. & C-13.02 R.C.P. if structure includes flared end section see Std. C-13.05 C.M.P. & C-13.04 R.C.P.

DESIGN APPROVED	STATE OF ARIZONA DEPARTMENT OF TRANSPORTATION DIVISION OF HIGHWAYS STANDARD DRAWINGS	REV 6/74
APPROVED FOR DISTRIBUTION	Special Backfill Measurement Limit	DRAWING NO. C-13.14

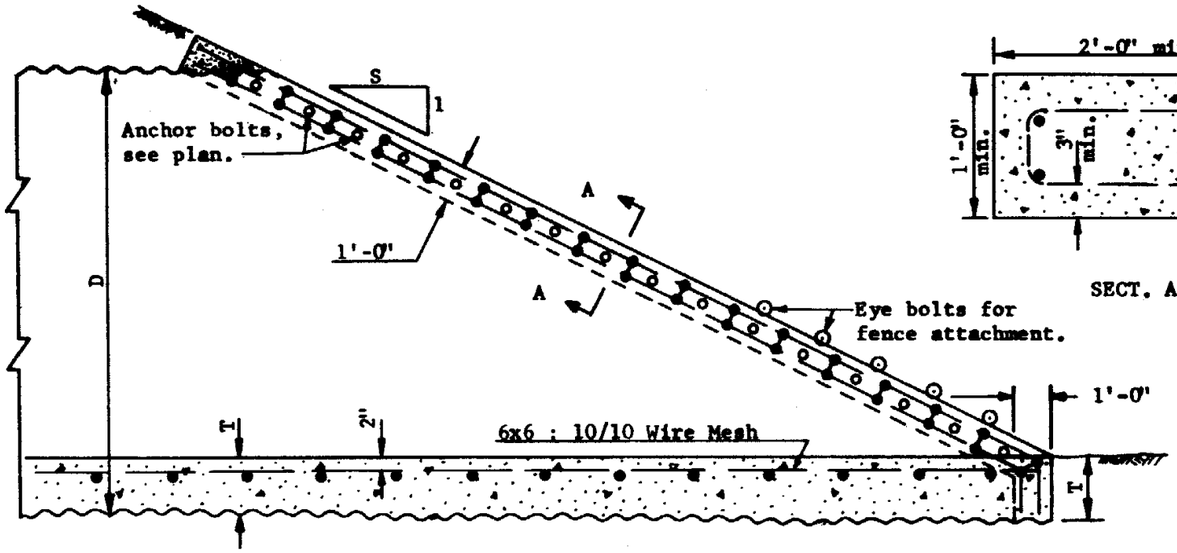

LONGITUDINAL SECTION

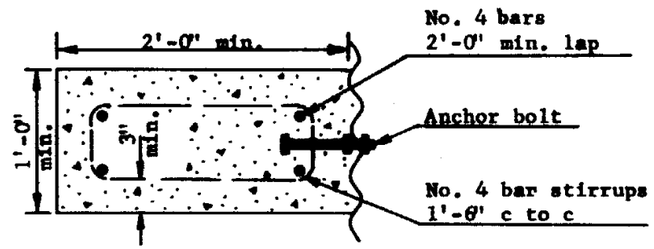

SECT. A-A

	D	T	S
Combination vehicle and cattle pass	144"	1'-6"	Varies
Cattle pass only	120"	6"	Varies

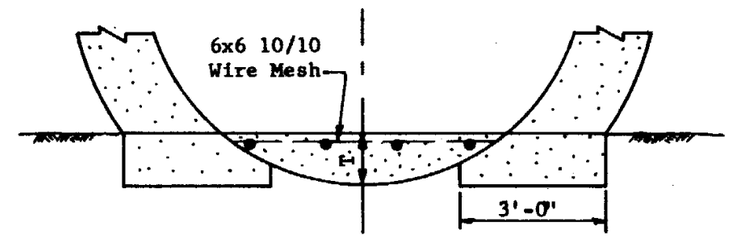

END ELEV.

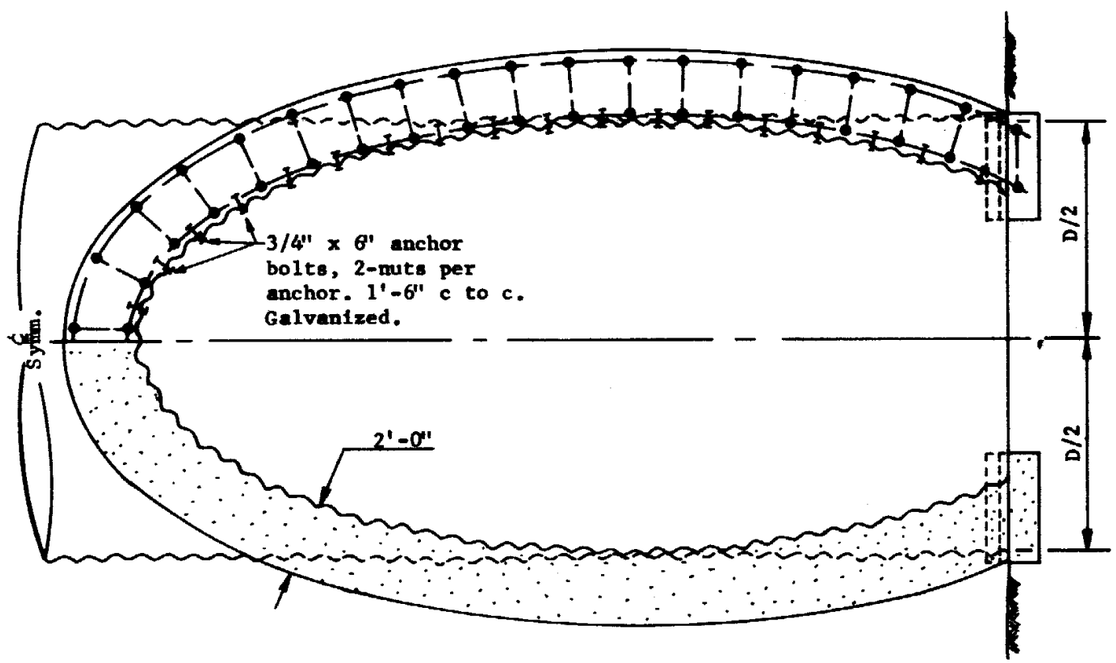

PLAN NORMAL TO SLOPE

GENERAL NOTES

This end treatment is to be used only for those cattle and/or vehicle passes not used for drainage.

All concrete shall be class A. An optional 12" A.B. invert paving base course and 6" of concrete may be used in the 144" diameter pipe.

Anchor bolts shall be retained in a horizontal position during pour with final tightening a minimum of 7 days after pour.

Pipe shall be backfilled before concrete bond beam is constructed. Minimum forming may be used.

Edges of wire mesh shall be fastened or welded to corrugation crests at intervals and in a manner approved by the Engineer. Laps shall be 6" minimum.

For installation normal to roadway centerline only.

DESIGN APPROVED	STATE OF ARIZONA DEPARTMENT OF TRANSPORTATION DIVISION OF HIGHWAYS STANDARD DRAWINGS	REV.
APPROVED FOR DISTRIBUTION	PIPE, CATTLE-VEHICLE PASS, MITERED END TREATMENT	DRAWING NO. C-13.18

DIMENSIONS									
I.D.	A	B	C	D	E	L	L + E	F	G
18"	6"	6"	1'-8"	4'-0"	2'-6"	9'-6"	12'-0"	1'-7"	4'-6"
24"	8"	8"	2'-0"	4'-2"	3'-0"	11'-6"	14'-6"	2'-1"	5'-6"
30"	8"	8"	2'-0"	4'-7"	3'-9"	13'-6"	17'-3"	2'-7"	6'-6"
36"	1'-0"	8"	2'-4"	5'-0"	4'-6"	15'-6"	20'-0"	3'-1"	7'-6"
42"	1'-1"	10"	2'-7"	5'-5"	5'-3"	17'-6"	22'-9"	3'-7"	8'-6"
48"	1'-2"	1'-0"	2'-10"	5'-10"	6'-0"	19'-6"	25'-6"	4'-1"	9'-6"

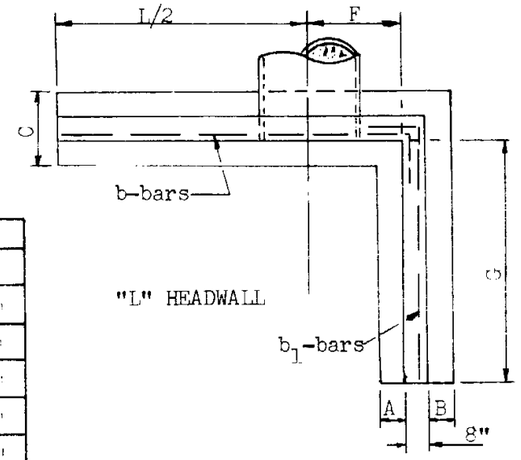

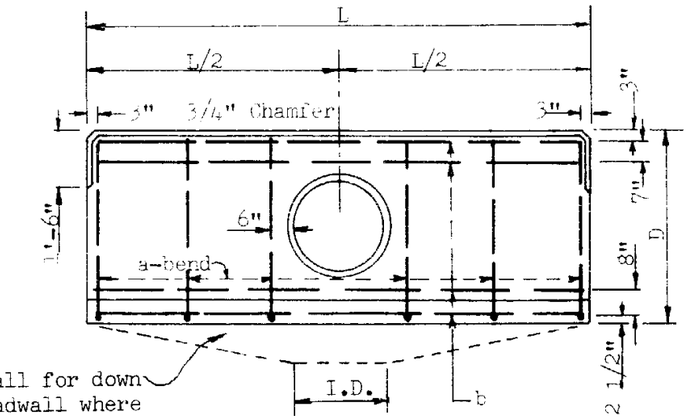

STRAIGHT HEADWALL
SINGLE PIPE

"L" HEADWALL									
I.D.	"A" Conc. C.Y.		Reinf. Steel #4 Bars						lbs.
	For C.M.P.	For Conc. Pipe	a		b		b_1		
			No.	Lgth.	No.	Lgth.	No.	Lgth.	
18"	1.42	1.39	10	4'-8"	6	6'-9"	5	5'-8"	73
24"	2.00	1.96	12	5'-4"	6	8'-3"	6	6'-8"	97
30"	2.53	2.48	14	5'-10"	6	9'-9"	6	7'-8"	118
36"	3.27	3.20	16	6'-8"	6	11'-3"	7	8'-8"	149
42"	4.04	3.95	18	7'-2"	6	12'-9"	7	9'-8"	194
48"	4.94	4.82	20	7'-8"	6	14'-3"	8	10'-8"	215

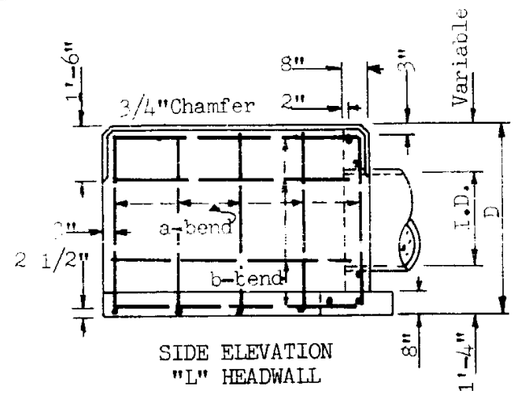

SIDE ELEVATION
"L" HEADWALL

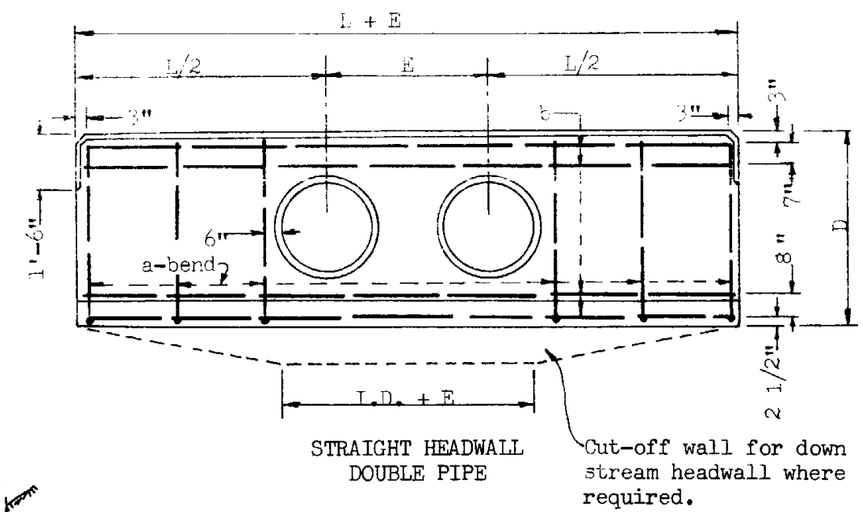

STRAIGHT HEADWALL
DOUBLE PIPE

SINGLE PIPE HEADWALL							
I.D.	"A" Conc. C.Y.		Reinf. Steel #4 Bars				lbs.
	For C.M.P.	For Conc. Pipe	a		b		
			No.	Lgth.	No.	Lgth.	
18"	1.17	1.14	8	4'-8½"	5	9'-3"	56
24"	1.64	1.60	10	5'-4½"	5	11'-3"	74
30"	2.05	2.00	10	5'-10½"	5	13'-3"	83
36"	2.63	2.56	12	6'-8½"	5	15'-3"	105
42"	3.24	3.15	14	7'-2½"	5	17'-3"	125
48"	3.96	3.84	16	7'-8½"	5	19'-3"	147

DOUBLE PIPE HEADWALL							
I.D.	"A" Conc. CY		Reinf. Steel #4 Bars				lbs.
	for CMP	for Conc. Pipe	a		b		
			No.	Lgth.	No.	Lgth.	
18"	1.45	1.40	9	4'-8"	5	11'-9"	67
24"	2.00	1.93	10	5'-4"	5	14'-3"	83
30"	2.53	2.43	11	5'-10"	5	17'-0"	100
36"	3.28	3.15	13	6'-8"	5	19'-9"	124
42"	4.04	3.86	15	7'-2"	5	22'-6"	147
48"	4.97	4.74	16	7'-8"	5	25'-3"	156

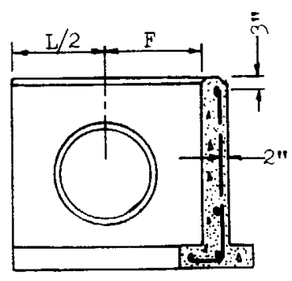

SECTION
"L" HEADWALL

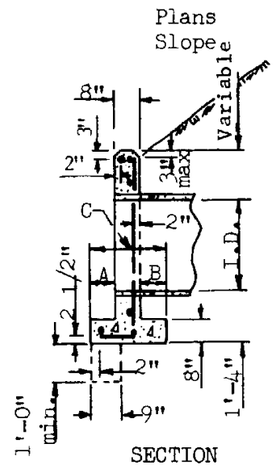

SECTION
STRAIGHT HEADWALL

GENERAL NOTES

All concrete shall be Class A.
High point of headwall shall not project more than 3" above slope.

DESIGN APPROVED	STATE OF ARIZONA DEPARTMENT OF TRANSPORTATION DIVISION OF HIGHWAYS STANDARD DRAWINGS	REV 11/74 8/77
APPROVED FOR DISTRIBUTION	HEADWALL, PIPE, STRAIGHT & "L" TYPES	DRAWING NO. C-14.01

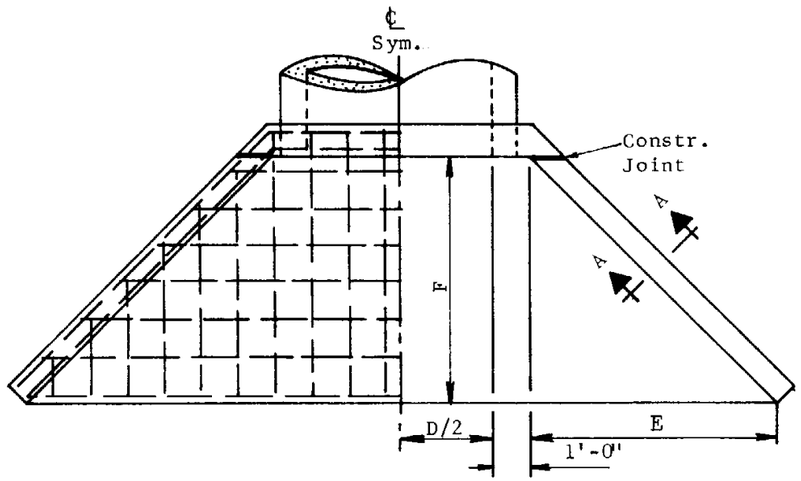

INLET HEADWALL

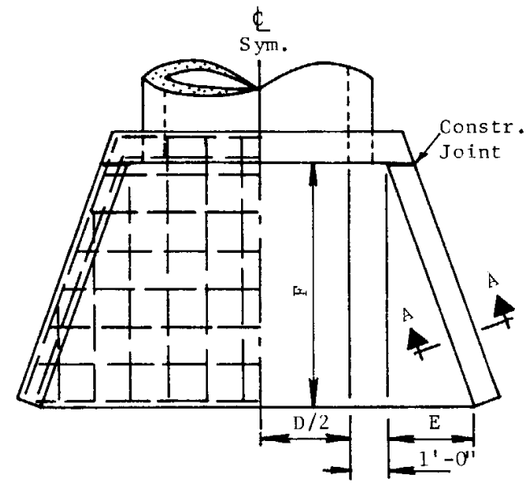

OUTLET HEADWALL

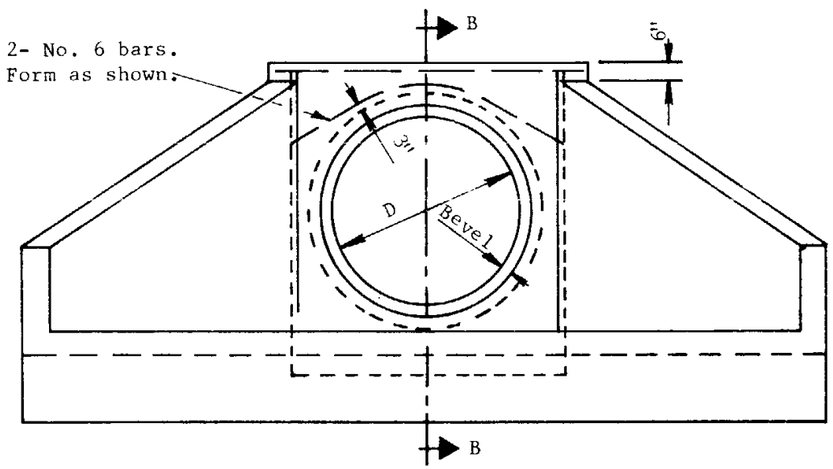

INLET HEADWALL FACE ELEV.-OUTLET SIMILAR

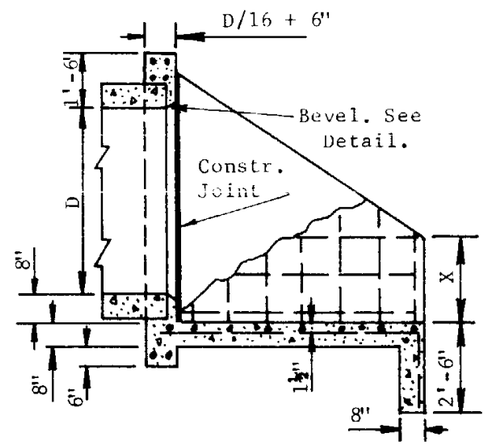

SECTION B-B

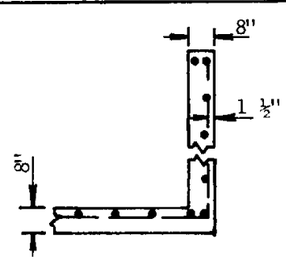

SECTION A-A

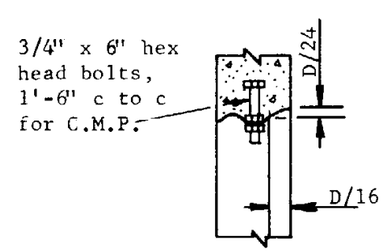

BEVEL DETAIL

		1 1/2:1 Embankment Slope					
		Dimensions			Conc. (C.Y.)		Reinf. Steel
D	Type	F	E	X	C.M.P.	R.C.P.	(Lbs.)
42"	1(Inlet)	5'-2"	5'-2"	1'-9"	4.55	4.45	275
	2(Outlet)	5'-2"	1'-11"	1'-9"	3.53	3.45	213
48"	3(Inlet)	5'-8"	5'-8"	1'-11"	5.32	5.20	321
	4(Outlet)	5'-8"	2'-1"	1'-11"	4.12	4.03	249
54"	5(Inlet)	6'-2"	6'-2"	2'-1"	6.14	6.01	370
	6(Outlet)	6'-2"	2'-3"	2'-1"	4.75	4.65	287
60"	7(Inlet)	6'-8"	6'-8"	2'-3"	7.03	6.88	424
	8(Outlet)	6'-8"	2'-5"	2'-3"	5.43	5.31	328
66"	9(Inlet)	7'-2"	7'-2"	2'-5"	7.98	7.81	481
	10(Outlet)	7'-2"	2'-7"	2'-5"	6.16	6.02	372
72"	11(Inlet)	7'-8"	7'-8"	2'-7"	8.99	8.80	542
	12(Outlet)	7'-8"	2'-9"	2'-7"	6.94	6.78	419
78"	13(Inlet)	8'-2"	8'-2"	2'-9"	10.07	9.85	608
	14(Outlet)	8'-2"	3'-0"	2'-9"	7.78	7.61	469
84"	15(Inlet)	8'-8"	8'-8"	2'-11"	11.20	10.96	676
	16(Outlet)	8'-8"	3'-2"	2'-11"	8.66	8.47	522
		4:1 Embankment Slope					
42"	17(Inlet)	8'-8"	8'-8"	3'-0"	7.88	7.70	475
	18(Outlet)	8'-8"	3'-2"	3'-0"	5.59	5.46	337
48"	19(Inlet)	8'-8"	8'-8"	3'-6"	8.47	8.28	511
	20(Outlet)	8'-8"	3'-2"	3'-6"	6.10	5.97	368
54"	21(Inlet)	8'-8"	8'-8"	4'-0"	9.07	8.87	548
	22(Outlet)	8'-8"	3'-2"	4'-0"	6.63	6.48	400
60"	23(Inlet)	9'-4"	9'-4"	4'-4"	10.39	10.16	627
	24(Outlet)	9'-4"	3'-5"	4'-4"	7.60	7.43	458
66"	25(Inlet)	9'-8"	9'-8"	4'-9"	11.42	11.17	689
	26(Outlet)	9'-8"	3'-6"	4'-9"	8.39	8.20	506
72"	27(Inlet)	9'-8"	9'-8"	5'-3"	12.11	11.84	731
	28(Outlet)	9'-8"	3'-6"	5'-3"	8.99	8.80	542
78"	29(Inlet)	10'-0"	10'-0"	5'-8"	13.22	12.93	798
	30(Outlet)	10'-0"	3'-8"	5'-8"	9.88	9.66	596
84"	31(Inlet)	10'-8"	10'-8"	6'-0"	14.81	14.48	893
	32(Outlet)	10'-8"	3'-11"	6'-0"	11.00	10.76	664

GENERAL NOTES

All concrete shall be class A.

All rebars shall be No. 4 except 2- formed bars over pipe. Bar spacing shall be 1'-0" c to c.

High point of headwall shall not project more than 3" above slope.

For skewed pipe dimensions, see Std. C-14.02.1

Bevel is required only on inlet headwalls. Bell end of concrete pipe may replace bevel.

DESIGN APPROVED	STATE OF ARIZONA DEPARTMENT OF TRANSPORTATION DIVISION OF HIGHWAYS STANDARD DRAWINGS	REV 5/78 9/74
APPROVED FOR DISTRIBUTION	HEADWALL, NORMAL TO PIPE 42"-84" PIPE	DRAWING NO. C-14.02

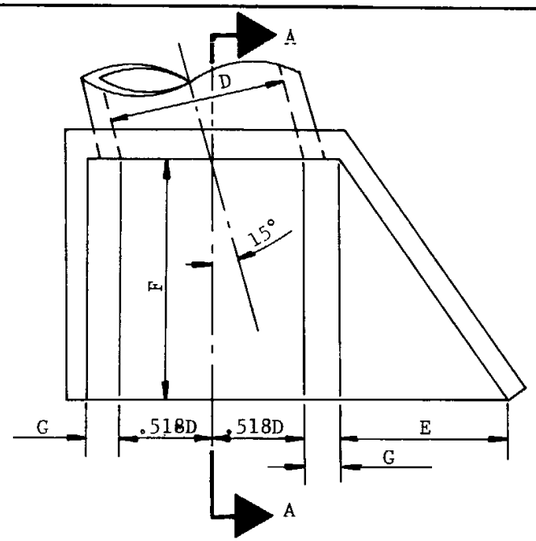

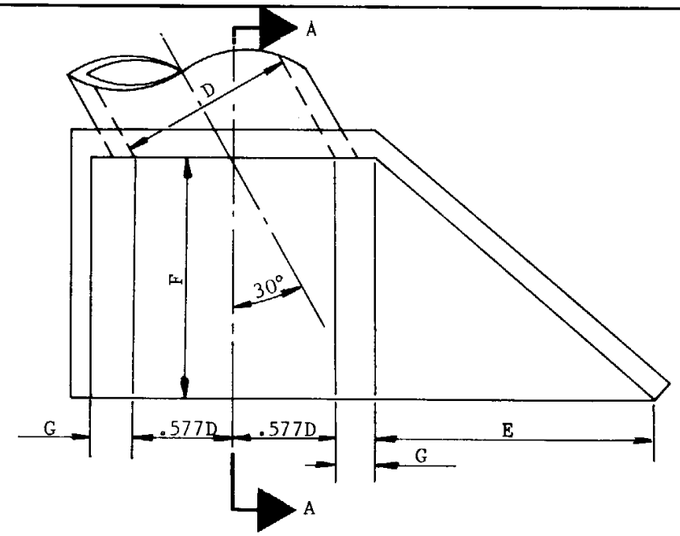

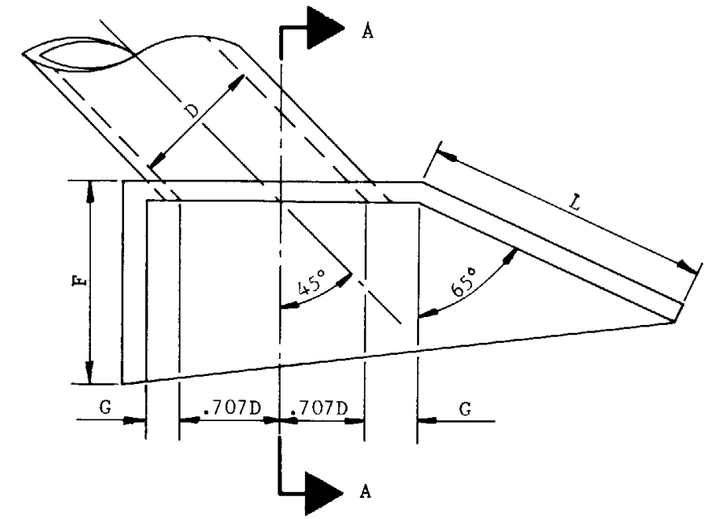

1 1/2:1 Embankment Slope

D	Type	Dimensions E	F	G	X*	Conc. (CY) CMP	RCP	Reinf. Steel (Lbs.)
42"	1	3'-7"	5'-2"	0'-8"	1'-9"	3.46	3.38	208
48"	2	4'-0"	5'-8"	0'-9"	1'-11"	4.03	3.94	246
54"	3	4'-4"	6'-2"	0'-9"	2'-1"	4.66	4.56	285
60"	4	4'-8"	6'-8"	0'-10"	2'-3"	5.41	5.29	324
66"	5	5'-0"	7'-2"	0'-11"	2'-5"	6.21	6.07	374
72"	6	5'-4"	7'-8"	0'-11"	2'-7"	7.01	6.86	421
78"	7	5'-9"	8'-2"	1'-0"	2'-9	7.94	7.76	479
84"	8	6'-1"	8'-8"	1'-1"	2'-11"	8.74	8.54	529
4:1 Embankment Slope								
42"	9	6'-1"	8'-8"	0'-8"	3'-0"	5.32	5.20	338
48"	10	6'-1"	8'-8"	0'-9"	3'-6"	6.01	5.88	369
54"	11	6'-1"	8'-8"	0'-9"	4'-0"	6.55	6.41	400
60"	12	6'-6"	9'-4"	0'-10"	4'-4"	7.55	7.38	453
66"	13	6'-9"	9'-8"	0'-11"	4'-9"	8.48	8.30	512
72"	14	6'-9"	9'-8"	0'-11"	5'-3"	8.90	8.70	552
78"	15	7'-0"	10'-0"	1'-0"	5'-8"	10.08	9.86	608
84"	16	7'-6"	10'-8"	1'-1"	6'-0"	11.38	11.13	687

15° Sk. Headwalls

1 1/2:1 Embankment Slope

D	Type	Dimensions E	F	G	X*	Conc. (CY) CMP	RCP	Reinf. Steel (Lbs.)
42"	17	6'-2"	5'-2"	1'-0"	1'-9"	4.07	3.98	245
48"	18	6'-9"	5'-8"	1'-0"	1'-11"	4.76	4.66	286
54"	19	7'-4"	6'-2"	1'-1"	2'-1"	5.58	5.46	337
60"	20	7'-11"	6'-8"	1'-2"	2'-3"	6.47	6.33	391
66"	21	8'-6"	7'-2"	1'-3"	2'-5"	7.41	7.25	448
72"	22	9'-2"	7'-8"	1'-4"	2'-7"	8.51	8.32	508
78"	23	9'-9"	8'-2"	1'-4"	2'-9"	9.46	9.25	567
84"	24	10'-4"	8'-8"	1'-5"	2'-11"	10.61	10.37	632
4:1 Embankment Slope								
42"	25	10'-4"	8'-8"	1'-0"	3'-0"	6.70	6.56	415
48"	26	10'-4"	8'-8"	1'-0"	3'-6"	7.29	7.13	451
54"	27	10'-4"	8'-8"	1'-1"	4'-0"	7.97	7.79	481
60"	28	11'-1"	9'-4"	1'-2"	4'-4"	9.21	9.01	559
66"	29	11'-6"	9'-8"	1'-3"	4'-9"	10.25	10.03	619
72"	30	11'-6"	9'-8"	1'-4"	5'-3"	11.04	10.80	666
78"	31	11'-11"	10'-0"	1'-4"	5'-8"	12.11	11.84	734
84"	32	12'-9"	10'-8"	1'-5"	6'-0"	13.65	13.35	826

30° Sk. Headwalls

1 1/2:1 Embankment Slope

D	Type	Dimensions F	G	L	X*	X'*	Conc. (CY) CMP	RCP	Reinf. Steel (Lbs.)
42"	33	5'-2"	1'-5"	9'-6"	1'-9"	2'-6"	5.27	5.16	316
48"	34	5'-8"	1'-6"	9'-6"	1'-11"	3'-0"	6.11	5.99	367
54"	35	6'-2"	1'-7"	9'-6"	2'-1"	3'-6"	7.09	6.95	426
60"	36	6'-8"	1'-8"	9'-9"	2'-3"	3'-11"	8.16	8.00	490
66"	37	7'-2"	1'-9"	9'-9"	2'-5"	4'-5"	9.30	9.11	558
72"	38	7'-8"	1'-10"	9'-9"	2'-7"	4'-11"	10.60	10.39	636
78"	39	8'-2"	1'-11"	10'-1"	2'-9"	5'-4"	11.65	11.42	699
84"	40	8'-8"	2'-0"	10'-4"	2'-11"	5'-9"	12.94	12.68	777
4:1 Embankment Slope									
42"	41	8'-8"	1'-5"	10'-10"	3'-0"	4'-0"	6.98	6.84	419
48"	42	8'-8"	1'-6"	10'-10"	3'-6"	4'-6"	7.61	7.46	457
54"	43	8'-8"	1'-7"	10'-10"	4'-0"	5'-0"	8.29	8.12	498
60"	44	9'-4"	1'-8"	11'-8"	4'-4"	5'-5"	9.62	9.43	577
66"	45	9'-8"	1'-9"	12'-1"	4'-9"	5'-11"	10.68	10.47	641
72"	46	9'-8"	1'-10"	12'-1"	5'-3"	6'-5"	11.53	11.30	692
78"	47	10'-0"	1'-11"	12'-6"	5'-8"	6'-10"	12.69	12.44	762
84"	48	10'-8"	2'-0"	13'-4"	6'-0"	7'-3"	14.15	13.87	849

45° Sk. Headwalls

*15° & 30° Sk. Headwalls, X applies to both Lt. & Rt. Wings.
45° Headwalls, X applies to Lt. Wing and X' to Rt. Wing.

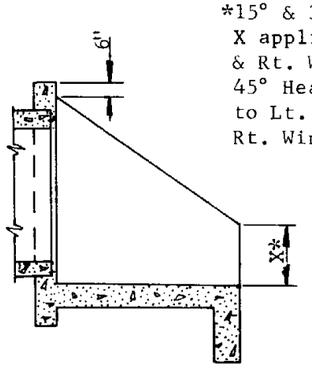

Section A-A

For other headwall dimensions, steel reinforcing, inlet bevel and other details not shown, see Std. C-14.02.

For skewed installations, inlet and outlet headwall types are identical for equal embankment slopes.

For inlet and outlet wingwall flare differences for headwalls normal to pipe, see Std. C-14.02.

See Structures Section Stds. B-11.01 through B-15.04 headwall designs for pipes over 84" Dia.

DESIGN APPROVED

APPROVED FOR DISTRIBUTION

STATE OF ARIZONA
DEPARTMENT OF TRANSPORTATION
DIVISION OF HIGHWAYS
STANDARD DRAWINGS

REV

Headwalls, 42"-84" Pipe
Skewed

DRAWING NO
C-14.02.1

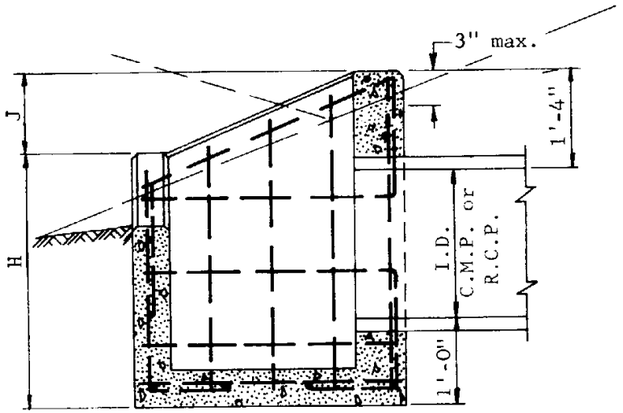

SECTION Z-Z

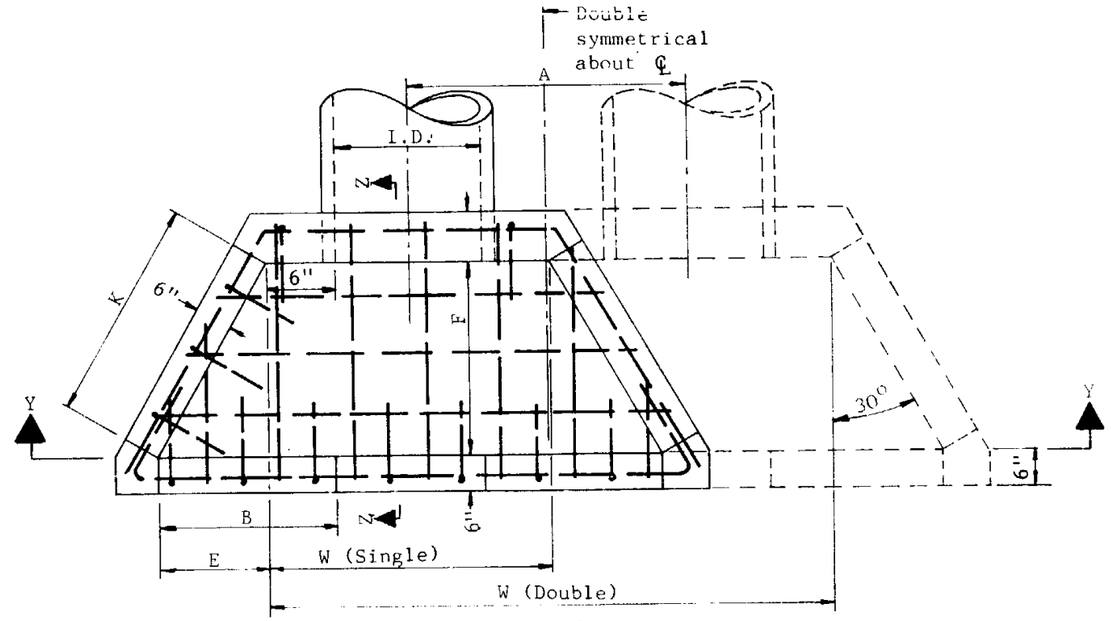

PLAN

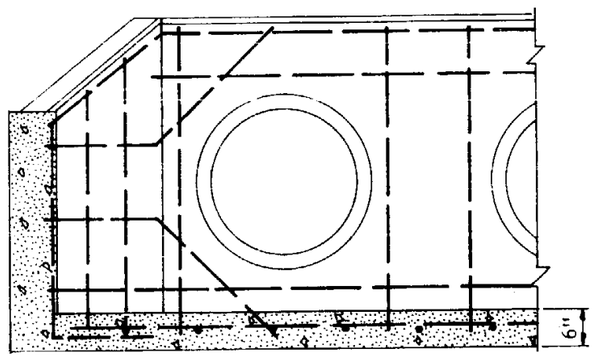

SECTION Y-Y

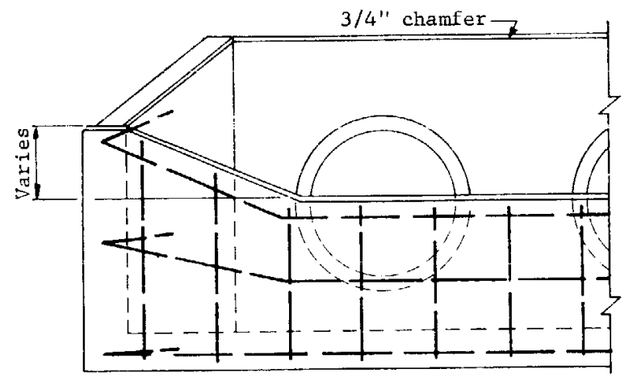

ELEVATION

GENERAL NOTES

See also Std. C-13.01.

High point of headwall shall not project more than 3" above slope.

All concrete shall be Class A.

All reinforcing bars shall be number 4, 1'-0" c to c and 3" clear to inside of walls and floor.

PIPE	DIMENSIONS									QUANTITIES					
										CONC. C.Y.				REINF. STEEL	
										Single		Double		LBS.	
I.D.	W Single	W Double	A	B	E	F	H	J	K	C.M.P.	For Conc. Pipe Deduct	C.M.P.	For Conc. Pipe Deduct	Single	Double
18"	2'-6"	5'-2"	2'-8"	1'-3"	9"	1'-3 5/8"	3'-1"	9"	1'-6"	0.76	0.03	1.12	0.06	75	107
24"	3'-0"	6'-6"	3'-6"	1'-7 1/2"	1'-1 1/2"	1'-11 3/8"	3'-5"	11"	2'-3"	1.00	0.04	1.55	0.09	92	136
30"	3'-6"	7'-10"	4'-4"	2'-0"	1'-6"	2'-7 1/4"	3'-9"	1'-1"	3'-0"	1.50	0.06	2.29	0.13	112	166
36"	4'-0"	9'-2"	5'-2"	2'-4 1/2"	1'-10 1/2"	3'-3"	4'-0"	1'-4"	3'-9"	1.96	0.09	3.01	0.17	145	214
42"	4'-6"	10'-6"	6'-0"	2'-9"	2'-3"	3'-10 3/4"	4'-4"	1'-6"	4'-6"	2.49	0.11	3.85	0.23	189	279

DESIGN APPROVED

APPROVED FOR DISTRIBUTION

STATE OF ARIZONA
DEPARTMENT OF TRANSPORTATION
DIVISION OF HIGHWAYS
STANDARD DRAWINGS

REV. 6/74

HEADWALL, DROP INLET

DRAWING NO. C-14.03

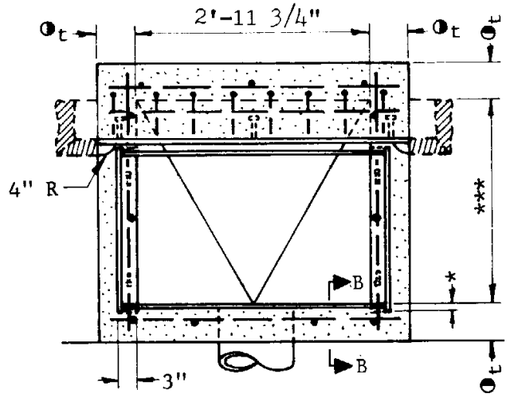

PLAN-CATCH BASIN TYPE 1 - SINGLE

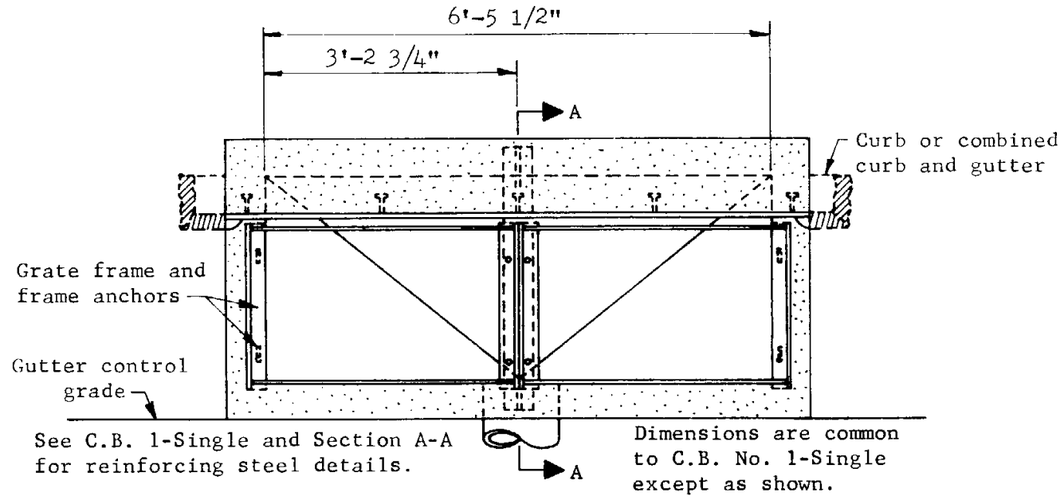

PLAN-CATCH BASIN TYPE 1 - DOUBLE

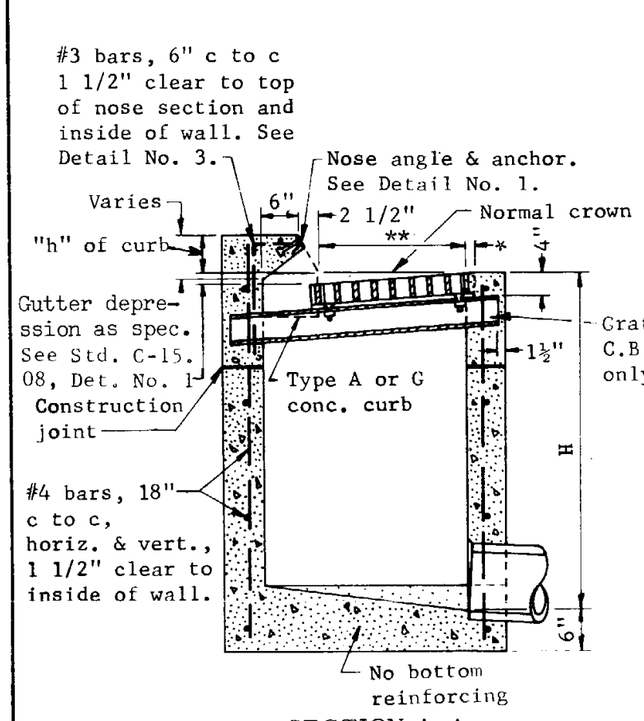

SECTION A-A

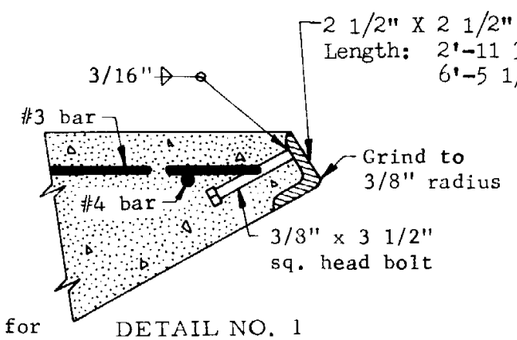

DETAIL NO. 1

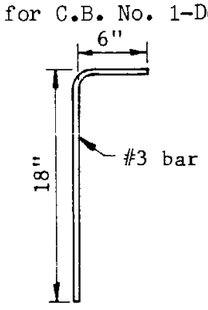

DETAIL NO. 3

NOTE: Provide Std. C-15.08 Construction Drain.

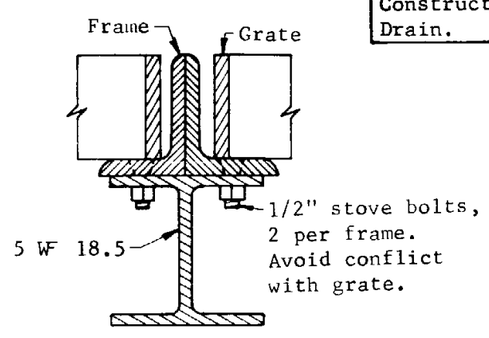

DETAIL NO. 2

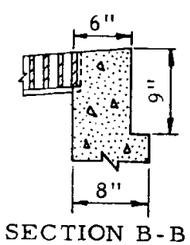

SECTION B-B

Use this section when t = 8"

GENERAL NOTES

Pipes can be placed in any wall.

Floor shall have a wood trowel finish and a minimum 4:1 slope in all directions to outlet.

All structural steel shall be ASTM A 36.

Welding shall be in accordance with Std. Welding Specifications.

Grate, frame, beam and nose angle shall be given one shop coat of No. 1 paint.

Concrete shall be Class A.

Construction joints and drains shall be placed to meet field conditions. See Std. C-15.08.

Any specified gutter depression shall be warped to opening according to Std. C-15.08.

Curb opening areas, sq. ft., for Type 1-Single and Type 1-Double equal 0.25 and 0.54, respectively, for each inch of "h" + gutter depression —2.35". See Std. C-15.08.

For grate and frame details and grate opening areas, see Stds. C-15.06 & C-15.07.

*3/4" for longitudinal and 3" for transverse bearing bar grates.

** 2'-0" for LW, LB, EF, TW and TB series 1 grates. 1'-6" for LW, LB, EF, TW and TB series 2 grates. Use 1'-6" with combined curb and gutter.

*** 2'-8½" for LW, LB, TW and TB series 1 grates. 2'-2½" for LW, LB, TW and TB series 2 grates.

◑t=6" when H is 8' or less; 8" when H is over 8'. See Sect. B-B.

DESIGN APPLICATION

Type 1-Single: For use on continuous slopes and in sags.

Type 1-Double: For use in sags only.

Type 1 is preferable to Type 4 when curb opening is not objectionable.

DESIGN APPROVED	STATE OF ARIZONA DEPARTMENT OF TRANSPORTATION DIVISION OF HIGHWAYS STANDARD DRAWINGS	REV 6/74
APPROVED FOR DISTRIBUTION	CATCH BASIN, TYPE 1	DRAWING NO. C-15.01

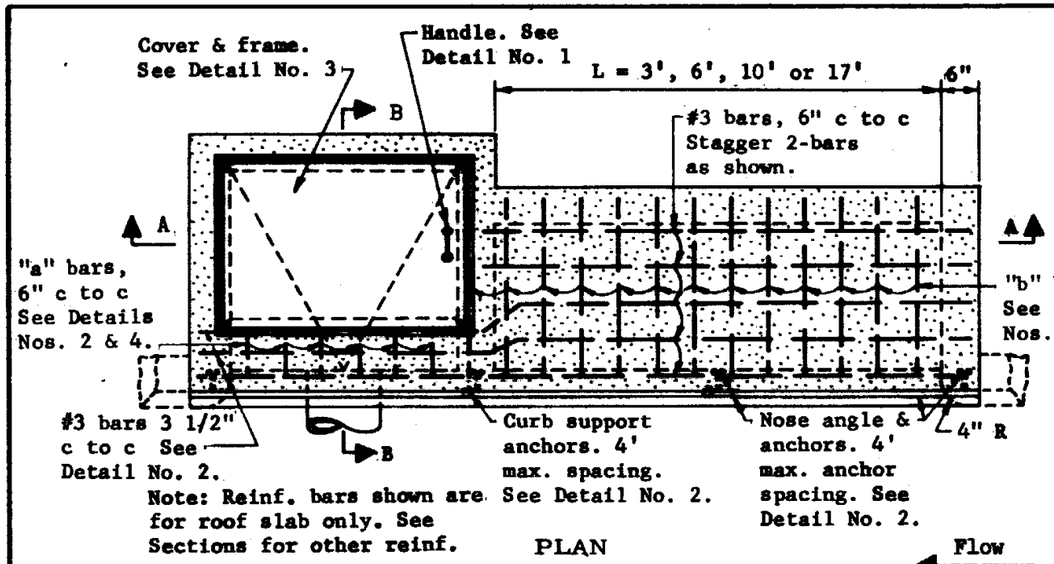

PLAN

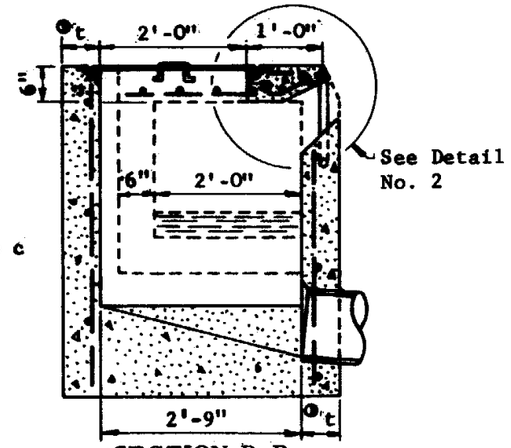

SECTION B-B

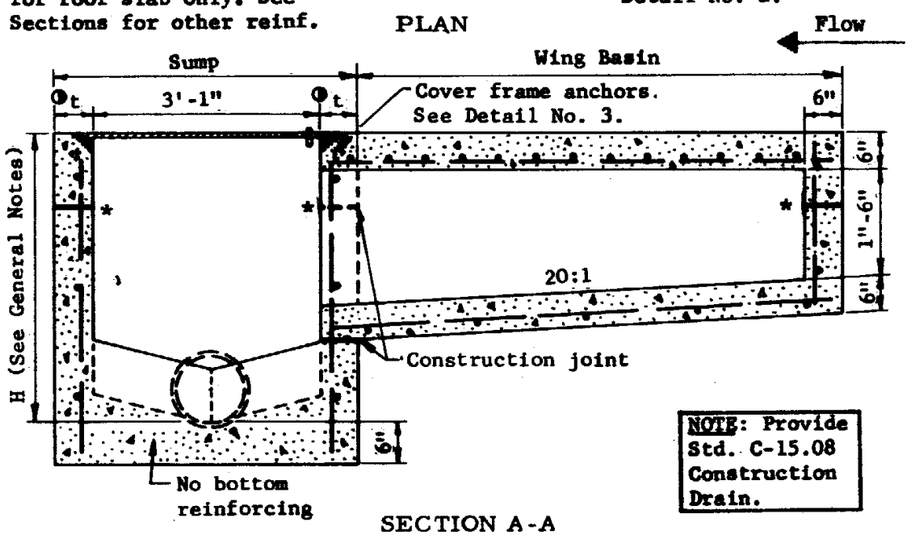

SECTION A-A

NOTE: Provide Std. C-15.08 Construction Drain.

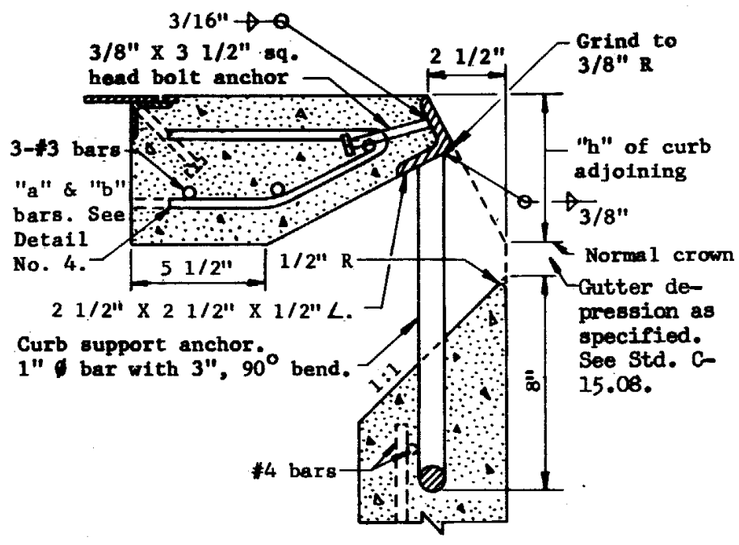

DETAIL NO. 2

GENERAL NOTES

Type 3 - Sump Only.

Type 3-Wing(illustrated), sump with wing basin upstream.

Type 3-Double wing, sump with symmetrical wing basin each side.

Pipes can be placed in any wall except wall adjacent to wing basin.

Sump floor shall have a wood trowel finish and a minimum slope of 4:1 in all directions toward outlet pipe.

Gutter depression shall be warped to opening according to Std. C-15.08.

All structural steel shall be ASTM A 36.

Nose angle, frame and cover shall be given one shop coat of No. 1 paint.

All concrete shall be Class A.

All reinforcing bars shall be #4, 1'-6" c to c both ways and 1 1/2" clear to inside of walls and outside of wing basin floor except as shown.

Curb opening area (Sq. Ft.) per inch of curb "h" + gutter depression = curb opening length (ft.) X 0.0833.

Welding shall be in accordance with Standard Welding Specifications.

* Construction joints at or below bottom of curb line. Construction joints and drains shall be placed to meet field conditions. See Std. C-15.08.

◑ t = 6" when H = 8' or less
8" when H is greater than 8'.
See Sect. B-B, Std. C-15.01.

H = 2'-10" min. when L = 3'
3'-0" min. when L = 6'
3'-2" min. when L = 10'
3'-7" min. when L = 17'

DESIGN APPLICATION:

For use in continuous slope or sag locations that preclude use of grated opening.

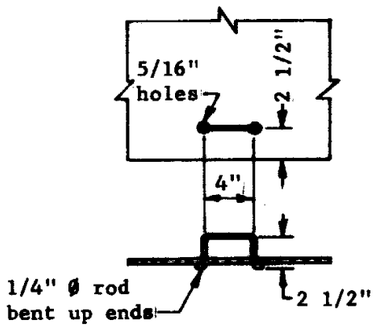

DETAIL NO. 1

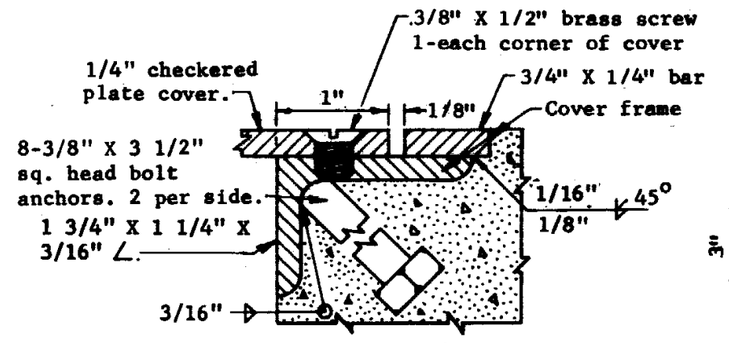

DETAIL NO. 3

Miter frame sections 45°
butt weld and surface grind.

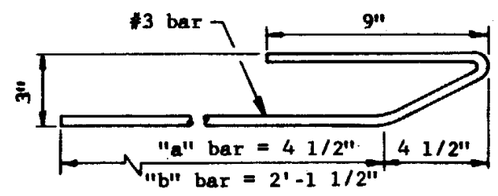

DETAIL NO. 4

DESIGN APPROVED	STATE OF ARIZONA DEPARTMENT OF TRANSPORTATION DIVISION OF HIGHWAYS STANDARD DRAWINGS	REV. 6/74
APPROVED FOR DISTRIBUTION	CATCH BASIN, TYPE 3	DRAWING NO. C-15.03

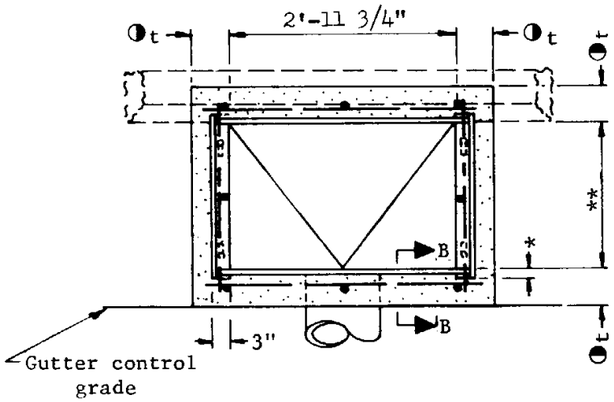

PLAN, CATCH BASIN TYPE 4 - SINGLE

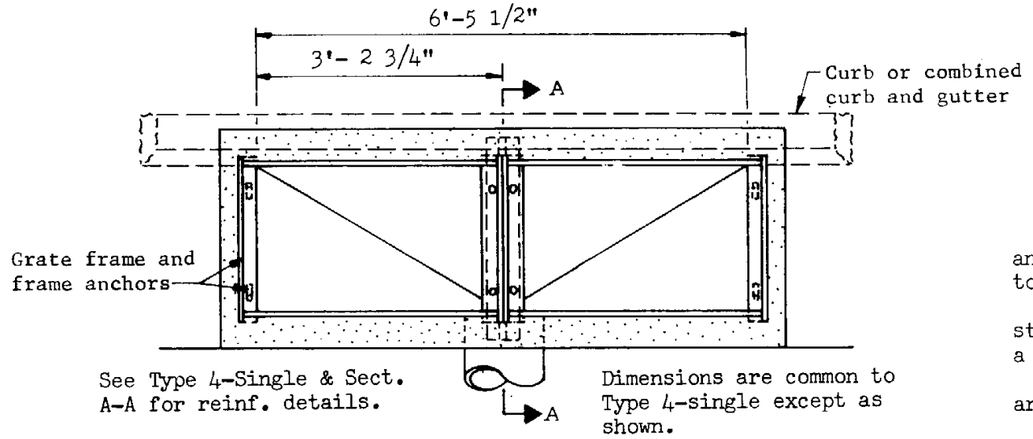

PLAN, CATCH BASIN TYPE 4 - DOUBLE

NOTE: Provide Std. C-15.08 Construction Drain.

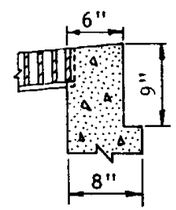

SECTION B-B

Use this section when t = 8"

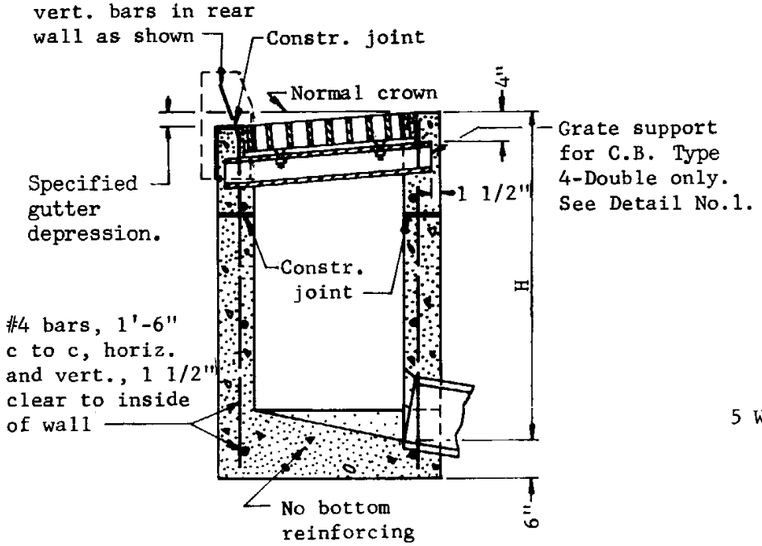

SECTION A-A

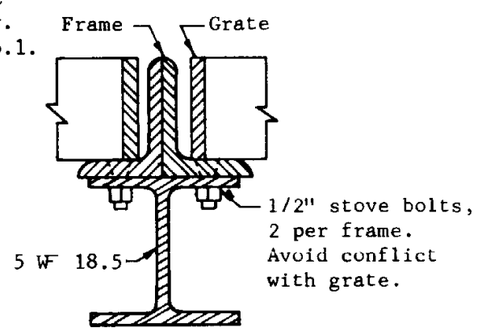

DETAIL NO. 1

GENERAL NOTES

Pipes can be placed in any wall.

Sump floor shall have a wood trowel finish and a minimum slope of 4:1 in all directions toward outlet pipe.

Curb over catch basin shall not be constructed until catch basin concrete has set for a minimum of 24 hours.

For grate and frame details and opening areas, see Stds. C-15.06 and C-15.07.

Any specified gutter depression shall be warped to opening according to Std. C-15.08

All structural steel shall be ASTM A 36.

Grate, frame and beam shall be given one shop coat of No. 1 paint.

All concrete shall be Class A.

Construction joints & drains shall be placed to meet field conditions. See Std. C-15.08.

* 3/4" for longitudinal and 3" for transverse bearing bar grates.

** 2'-0" for LW, LB, EF, TW and TB series 1 grates. 1'-6" for LW, LB, EF, TW and TB series 2 grates. Use 1'-6" with combined curb & gutter.

◑ t=6" when H=8' or less; 8" when H is greater than 8'. See Section B-B.

DESIGN APPLICATION:

Type 4 Single: For use on continuous slopes and in sags.

Type 4 Double: For use in sags only.

Use Type 4 in preference to Type 1 only when conditions preclude use of curb opening.

DESIGN APPROVED	STATE OF ARIZONA DEPARTMENT OF TRANSPORTATION DIVISION OF HIGHWAYS STANDARD DRAWINGS	REV 6/74
APPROVED FOR DISTRIBUTION	CATCH BASIN, TYPE 4	DRAWING NO. C-15.04

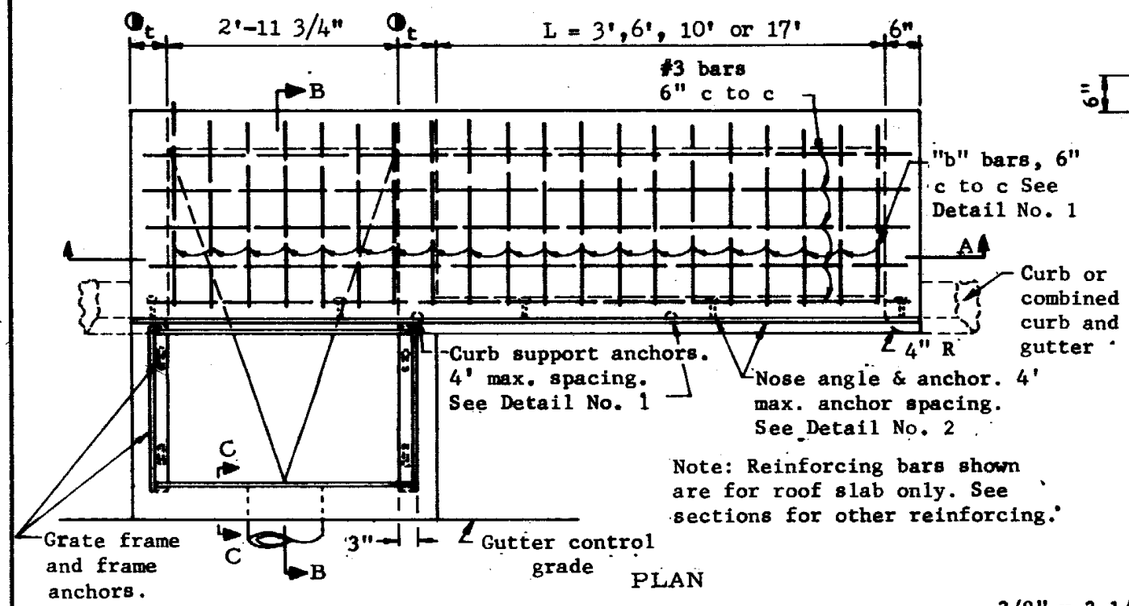

PLAN

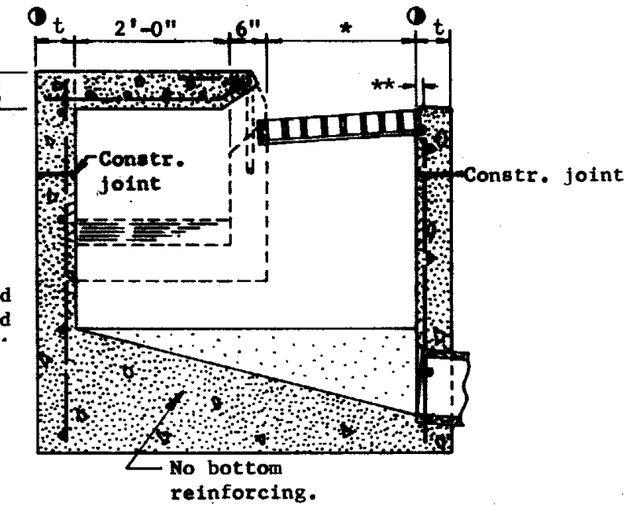

SECTION B-B

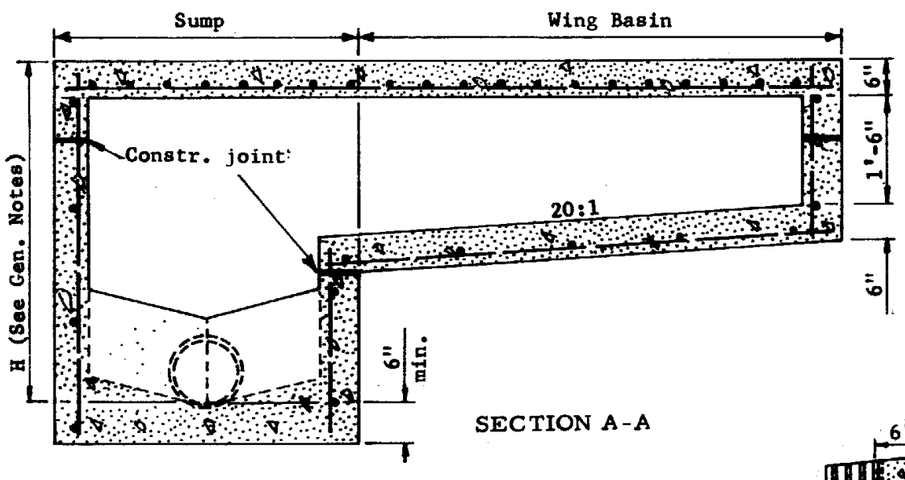

SECTION A-A

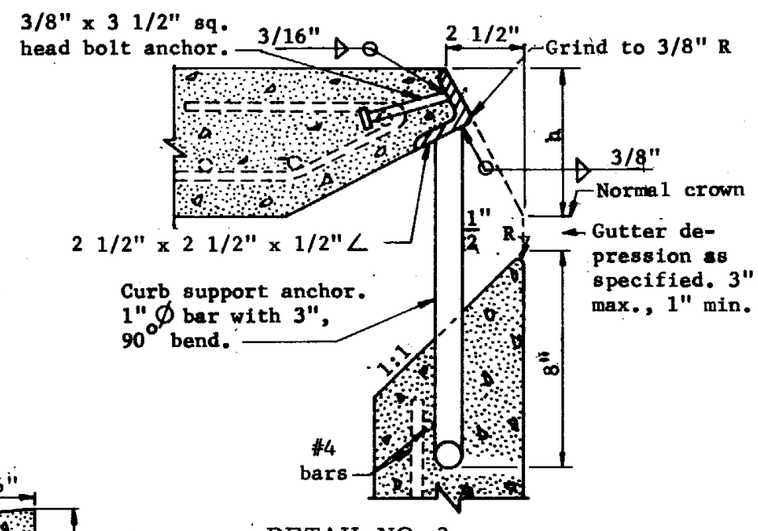

DETAIL NO. 2

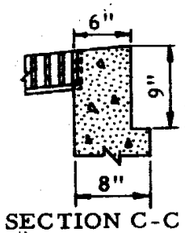

SECTION C-C
Use this section when t = 8"

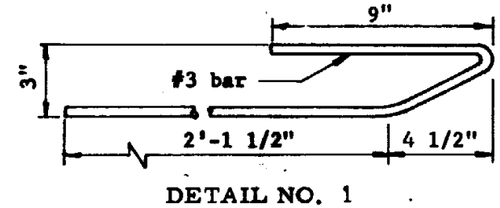

DETAIL NO. 1

NOTE: Provide Std. C-15.08 Construction Drain.

GENERAL NOTES

C.B. 5, sump only.

C.B. 5 Single, (illustrated), sump with wing basin upstream.

C.B. 5 Double, sump with symmetrical wing basins each side.

Pipes can be placed in any wall except wall adjacent to a wing basin.

Sump floor shall have a wood trowel finish and a minimum slope of 4:1 in all directions toward outlet pipe.

Welding shall be in accordance with Std. Welding Specifications.

Gutter depression shall be warped to opening according to Std. C-15.08.

All structural steel shall be in accordance with ASTM A 36.

Nose angle shall be painted with one No. 1 shop coat.

All concrete shall be Class A.

All reinforcing bars shall be #4, 18" c to c both ways and 1 1/2" clear to inside of walls and outside of wing basin floor except as shown.

Curb opening area (Sq. Ft.) per inch of curb "h" + gutter depression = curb opening length (Ft.) X 0.0834.

For grate and frame details and opening areas, see Stds. C-15.06 and C-15.07.

Construction joints shall be placed to meet field conditions.

Ⓣt = 6" when H = 8' or less; 8" when H is greater than 8'. (See Section C-C)

* 2'-0" for LW, LB, EF, TW and TB series 1 grates. 1'-6" for LW, LB, EF, TW and TB series 2 grates. Use 1'-6" with combined curb and gutter.

** 3/4" for longitudinal and 3" for transverse bearing bar grates.

H=3'-3" min. when L=3'
H=3'-5" min. when L=6'
H=3'-7" min. when L=10'
H=4'-0" min. when L=17'

DESIGN APPROVED	STATE OF ARIZONA DEPARTMENT OF TRANSPORTATION DIVISION OF HIGHWAYS STANDARD DRAWINGS	REV. 6/74
APPROVED FOR DISTRIBUTION	CATCH BASIN, TYPE 5	DRAWING NO. C-15.05

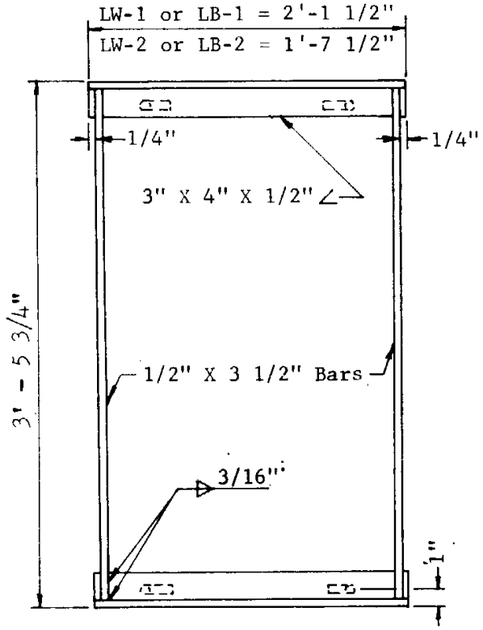

PLAN

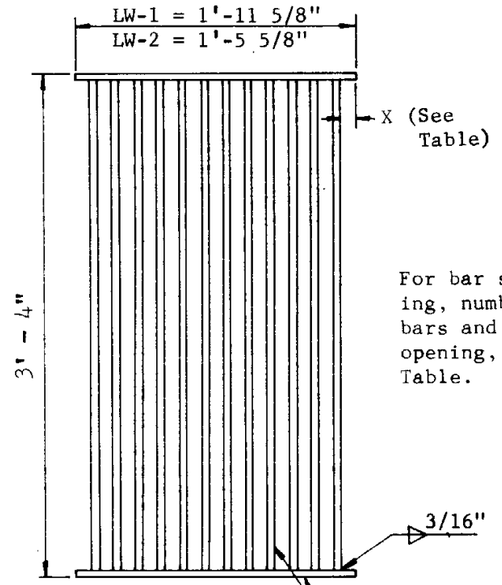

PLAN

For bar spacing, number of bars and grate opening, see Table.

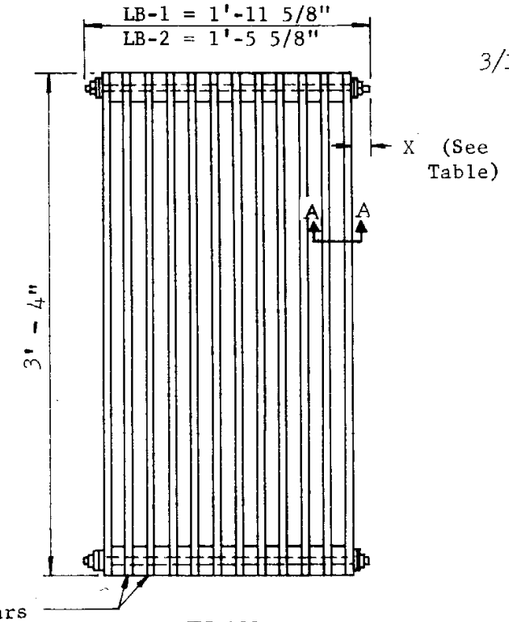

PLAN

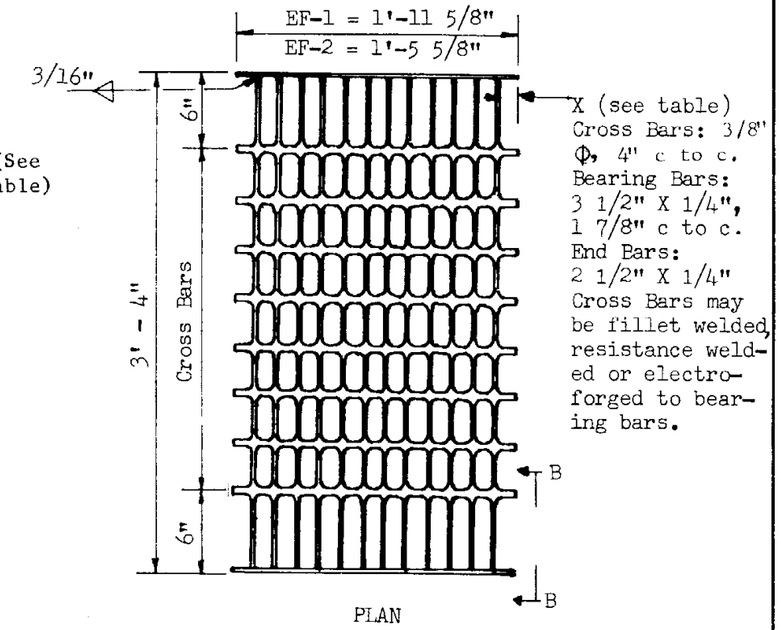

PLAN

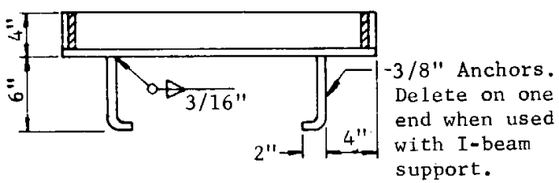

SECTION

FRAME

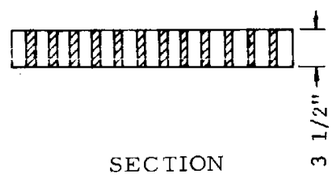

SECTION

GRATES TYPE LW & EF
Restrict to slopes of 3% or less.

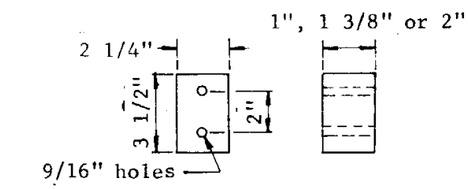

BAR SPACER DETAIL
Cast iron, cast steel or steel bar stock.

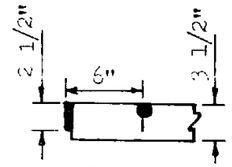

SECT. B-B

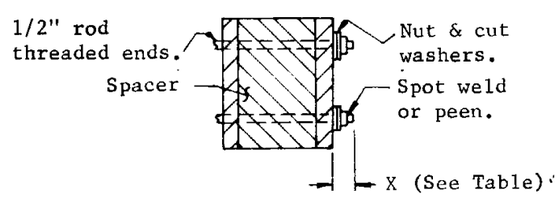

SECTION A-A

GRATES TYPE LB
Use on longitudinal grades in excess of 3% or as an alternate to Types LW or EF on grades of 3% or less.

GRATE TYPE	CLEAR BAR SPACING	NO. BARS	X	GRATE OPENING SQ. FT.
LW or LB - 1.0	1"	16	5/16"	3.97
" " - 1.1	1 3/8"	13	5/16"	4.34
" " - 1.2	2"	9	1 9/16"	4.84
EF - 1	1 5/8"	13	7/16"	4.66
LW or LB - 2.0	1"	12	5/16"	2.98
" " - 2.1	1 3/8"	9	1 1/16"	3.35
" " - 2.2	2"	7	1 1/16"	3.60
EF - 2	1 5/8"	10	1/4"	3.48

GENERAL NOTES

LW indicates longitudinal welded.
LB indicates longitudinal bolted.
EF indicates electroforged.

Grating units and frames shall be fabricated from structural steel ASTM A 36 except as noted.

All welding shall be in accordance with Standard Welding Specifications.

The completed assembly shall be given one shop coat of No. 1 paint.

Frames and grates shall fit to a maximum rock of 0.093" at any point.

DESIGN APPROVED
APPROVED FOR DISTRIBUTION

STATE OF ARIZONA
DEPARTMENT OF TRANSPORTATION
DIVISION OF HIGHWAYS
STANDARD DRAWINGS

REV 6/74

CATCH BASIN, GRATES, LONGITUDINAL BARS

DRAWING NO C-15.06

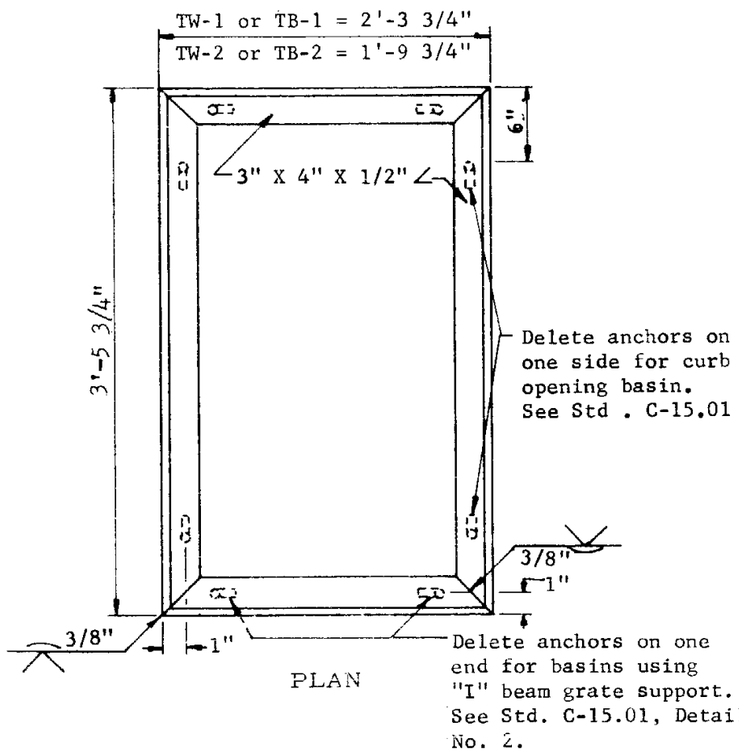

PLAN

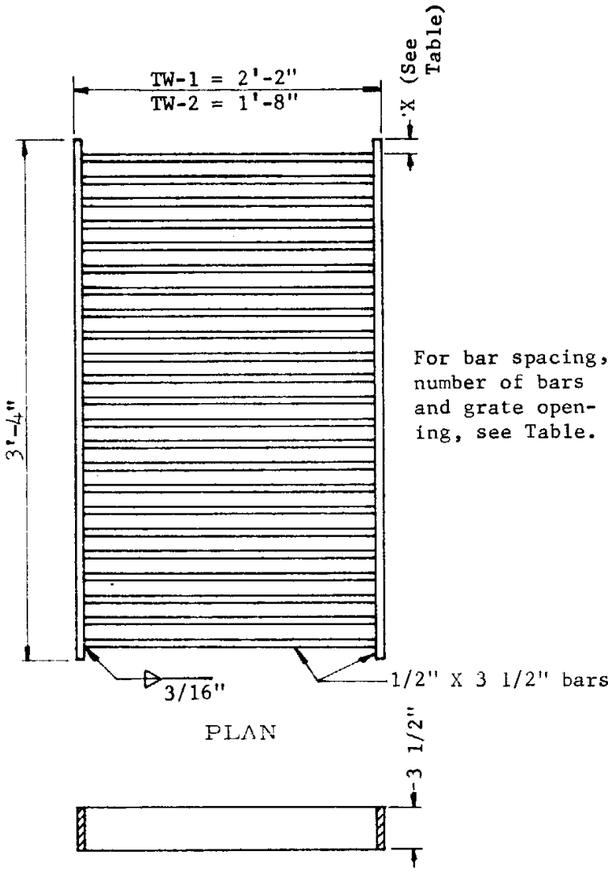

PLAN

SECTION

GRATE TYPES TW-1 & TW-2

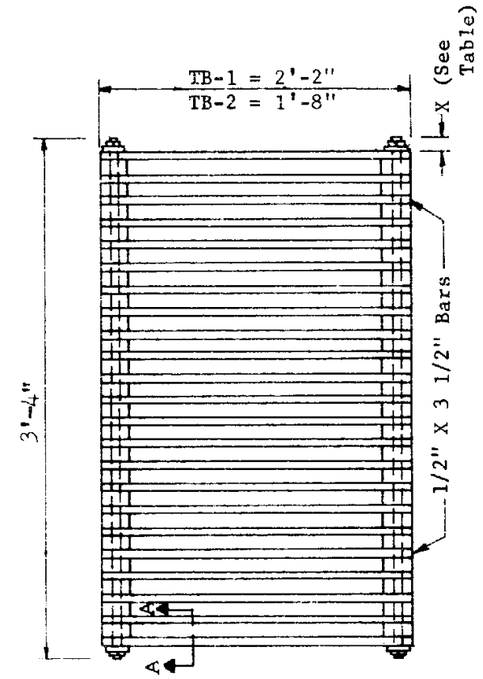

PLAN

NOTE: See also Type EF grates, Std. C-15.06.

GRATE TYPES TB-1 & TB-2

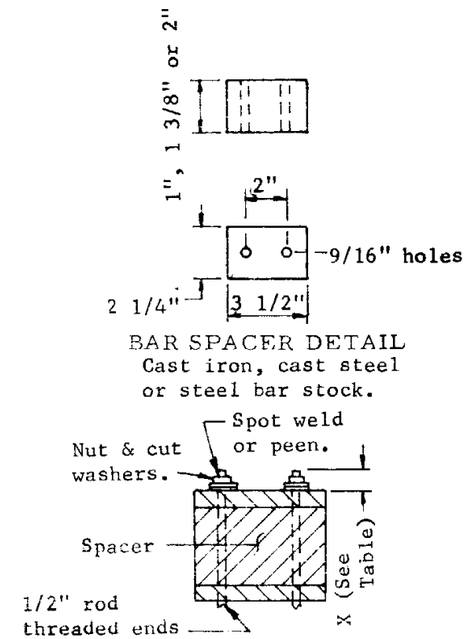

BAR SPACER DETAIL
Cast iron, cast steel or steel bar stock.

SECTION A-A

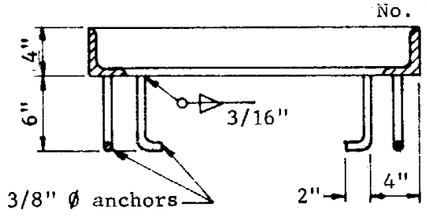

SECTION

FRAME

Type	Clear Spacing	No. Bars	X	Grate Opening Sq. Ft.
TW or TB-1.0	1"	26	1"	3.21
TW or TB-1.1	1 3/8"	21	1"	3.32
TW or TB-1.2	2"	16	1"	4.66
TW or TB-2.0	1"	26	1"	2.32
TW or TB-2.1	1 3/8"	21	1"	2.41
TW or TB-2.2	2"	16	1"	2.65

GENERAL NOTES

Grating units and frames shall be fabricated from structural steel except as noted. Structural steel shall be in accordance with ASTM A 36.

Welding shall be in accordance with Standard Welding Specifications.

The completed assembly shall be given one shop coat of No. 1 paint.

TW indicates transverse welded.

TB indicates transverse bolted.

Frame and grate shall fit to a max. rock of 0.093" at any point.

Restrict use to grades of 3% or less.

DESIGN APPROVED
APPROVED FOR DISTRIBUTION

STATE OF ARIZONA
DEPARTMENT OF TRANSPORTATION
DIVISION OF HIGHWAYS
STANDARD DRAWINGS

REV 6/74

CATCH BASIN, GRATES, TRANSVERSE BARS

DRAWING NO. C-15.07

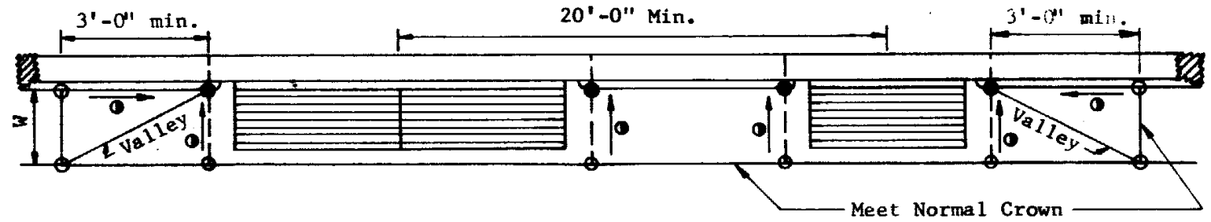

GUTTER DEPRESSION AND SPACING
CATCH BASIN TYPES 1, 4 & 5

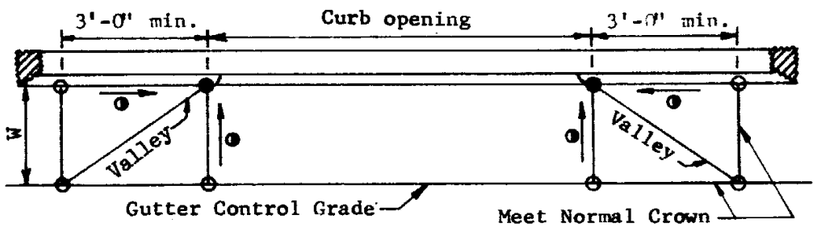

GUTTER DEPRESSION
CATCH BASIN TYPE 3

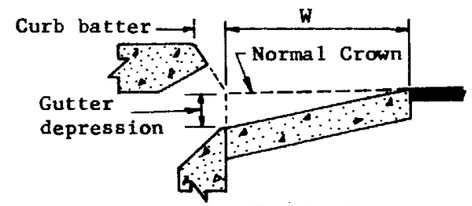

DETAIL NO. 1

LEGEND

Gutter depression: 3" max. (See Detail No. 1)
O = Normal pavement or gutter flow line elev.
● = Depressed elevation.
◐ = Straight grade with downward slope.
W = Normal gutter width per Std. C-5.01

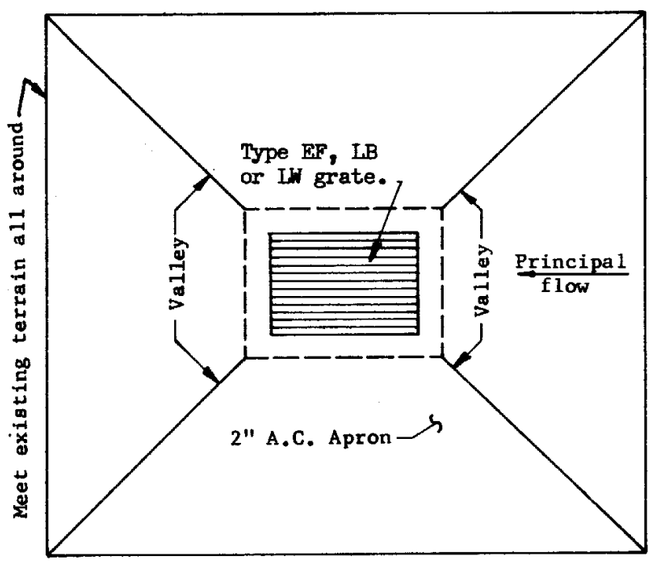

CATCH BASIN TYPE 4
(Off roadway location)

Apron shall be shaped to suit local conditions and shall extend a minimum of 4'-0" from edge of grate in all directions. Grate shall be depressed a minimum of 4" below surrounding terrain and bearing bars shall parallel direction of principal flow.

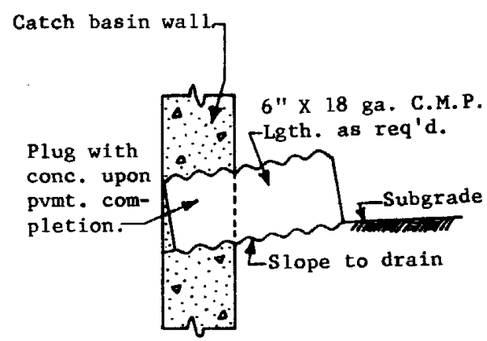

CATCH BASIN
CONSTRUCTION DRAIN
Drain may be deleted at
option of Engineer

GENERAL NOTES

No gutter depression shall extend into a traffic lane.

DESIGN APPROVED	STATE OF ARIZONA DEPARTMENT OF TRANSPORTATION DIVISION OF HIGHWAYS STANDARD DRAWINGS	REV. 6/74
APPROVED FOR DISTRIBUTION	Catch Basin Misc. Details	DRAWING NO. C-15.08

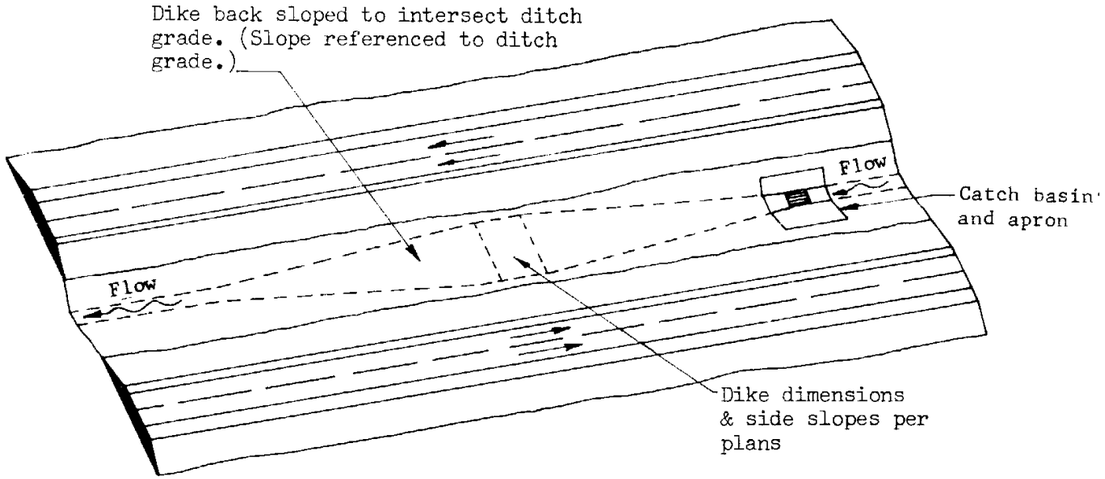

PLAN PERSPECTIVE
ILLUSTRATING 1-WAY FLOW WITH DYKE

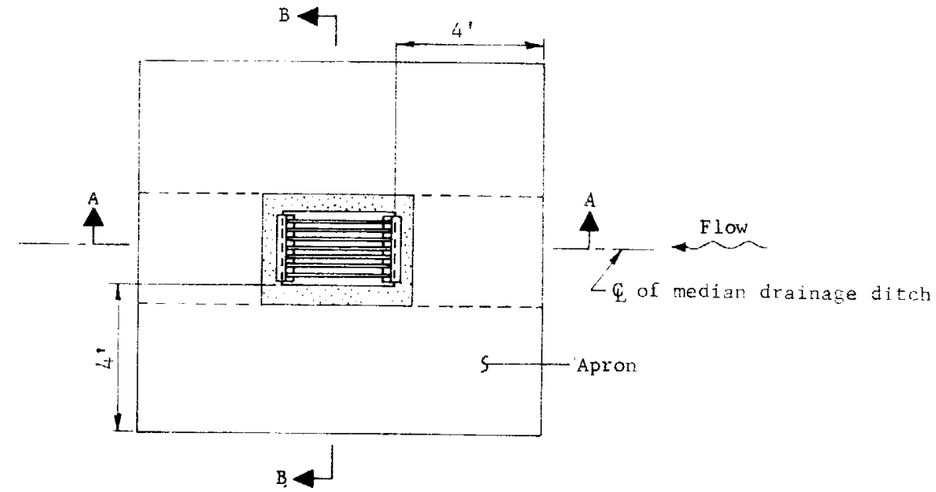

PLAN

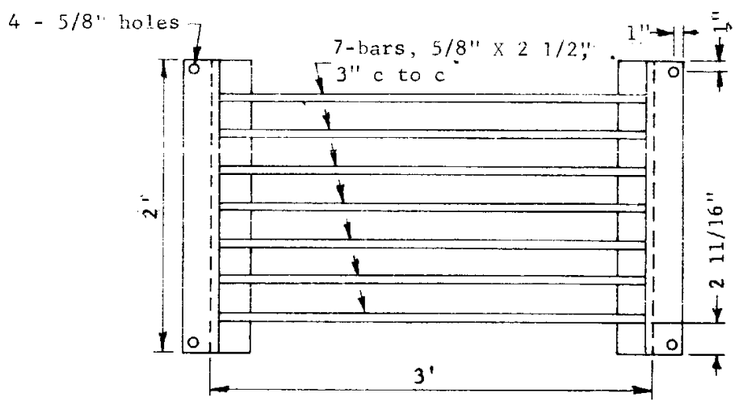

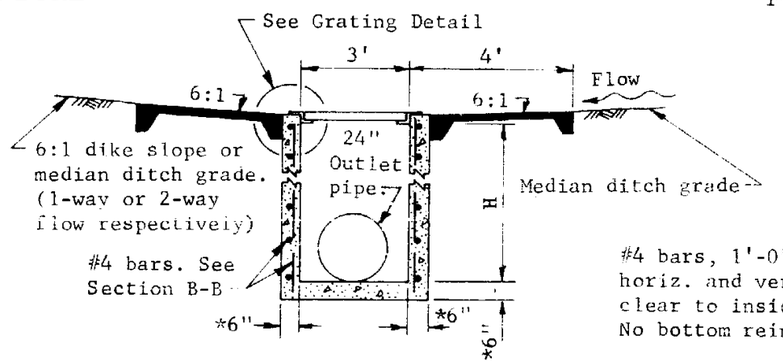

SECTION A-A

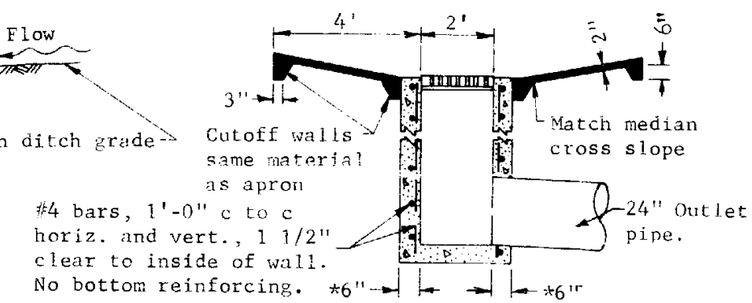

SECTION B-B

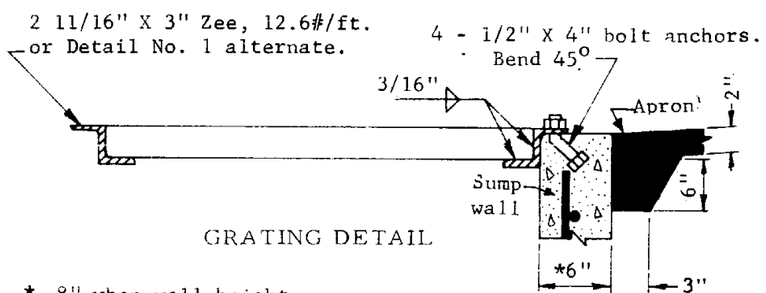

GRATING DETAIL

* 8" when wall height exceeds 8'.

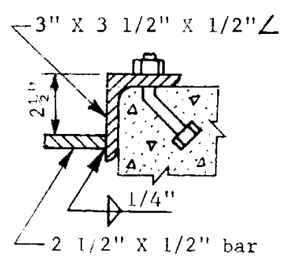

DETAIL NO. 1

GENERAL NOTES

Apron shall be A.C. or P.C. concrete as specified on Plans.
Concrete shall be Class A.
Grating shall be fabricated of structural steel.
Structural steel shall be in accordance with ASTM A 36.
Welding shall be in accordance with Standard Welding Specifications.
Grating assembly shall be given one shop coat of No. 1 paint.
"H" indicated on Plans.

DESIGN APPROVED	STATE OF ARIZONA DEPARTMENT OF TRANSPORTATION DIVISION OF HIGHWAYS STANDARD DRAWINGS	REV. 10/70
APPROVED FOR DISTRIBUTION	CATCH BASIN, MEDIAN, FLUSH	DRAWING NO. C-15.09

Construction Notes:

1. Excavate as required in compacted 10:1 slope.
2. Place mitered CMPA section and re-bars.
3. Backfill with concrete to mitered lip of C.M.P.A.
4. Set frame in wet concrete.
5. Complete concrete backfill to slope line and screed finish.
6. Remove excess concrete from frame and inside of C.M.P.A.
7. Install grates after concrete is set.

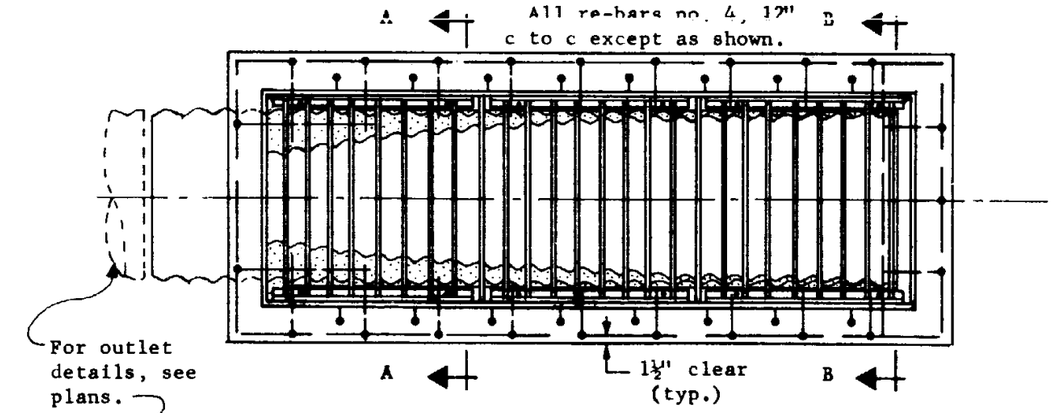

PLAN

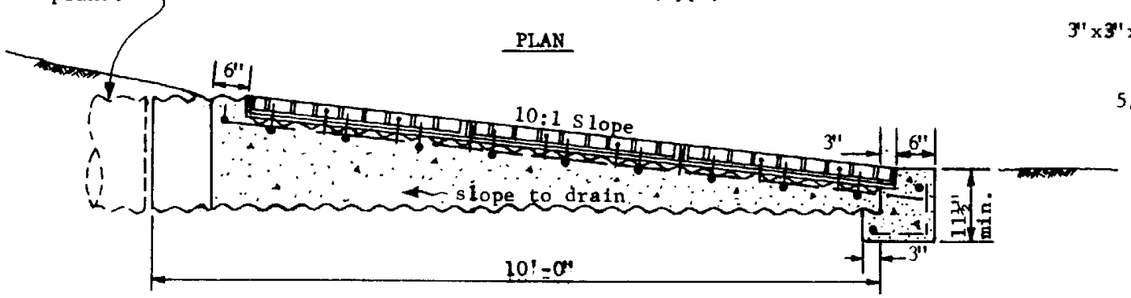

℄ SECTION

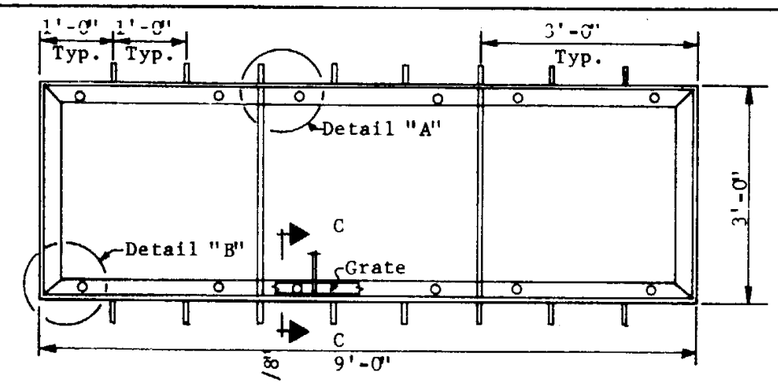

FRAME

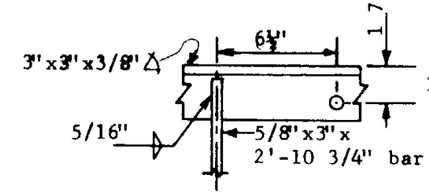

DETAIL "A"

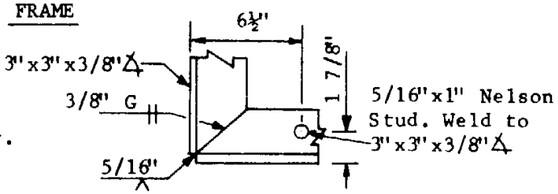

DETAIL "B"

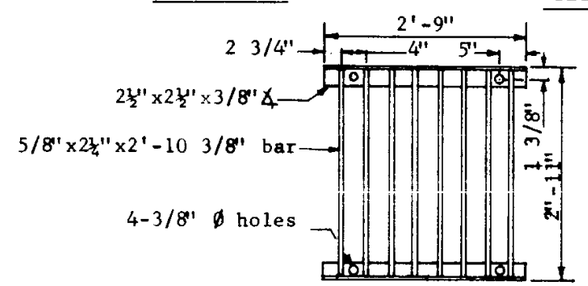

GRATE

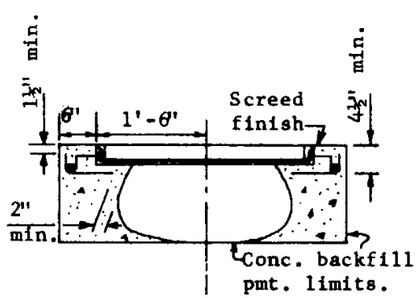

SECTION A-A

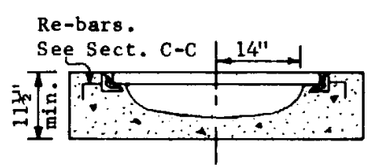

SECTION B-B

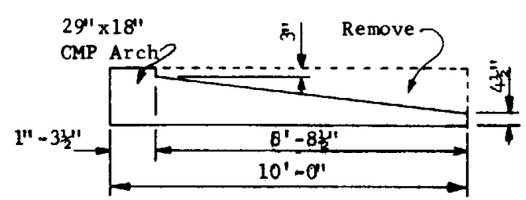

CMPA MITER

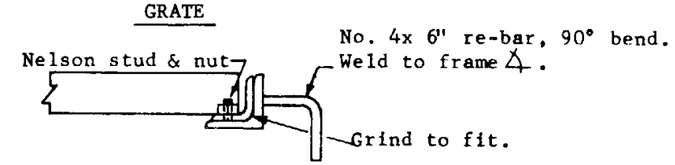

SECTION C- C

GENERAL NOTES

All concrete shall be class A.

Frame and grates shall be in accordance with ASTM A 36 and shall receive one shop coat of paint number 1A or 1B.

Reinforcing steel shall be intermediate grade conforming to ASTM A 615 Grade 40.

Mitered, 10', 29" x 18" CMPA section shall be 2 2/3" x ½" corrugated, 12 Gauge steel.

DESIGN APPROVED	STATE OF ARIZONA DEPARTMENT OF TRANSPORTATION DIVISION OF HIGHWAYS STANDARD DRAWINGS	REV 6/74
APPROVED FOR DISTRIBUTION	CATCH BASIN, MEDIAN DYKE	DRAWING NO C-15.10

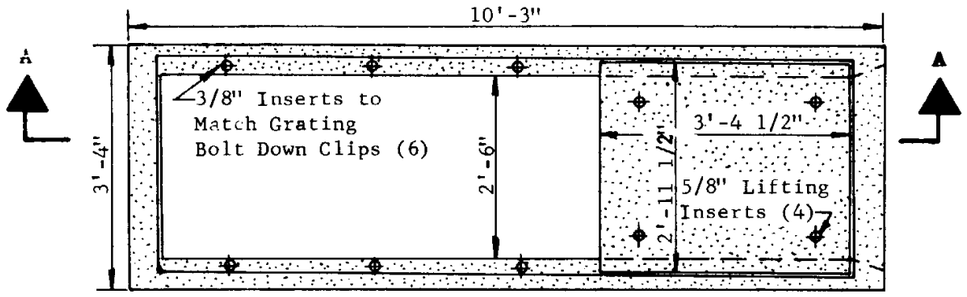

PLAN

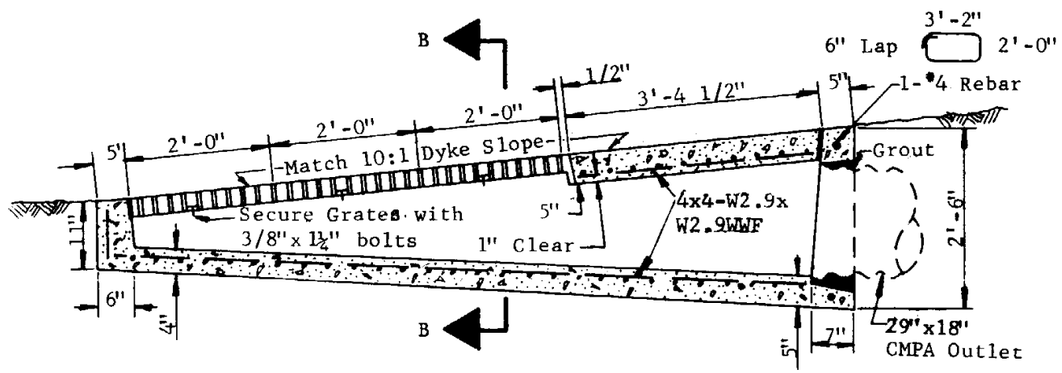

SECTION A-A

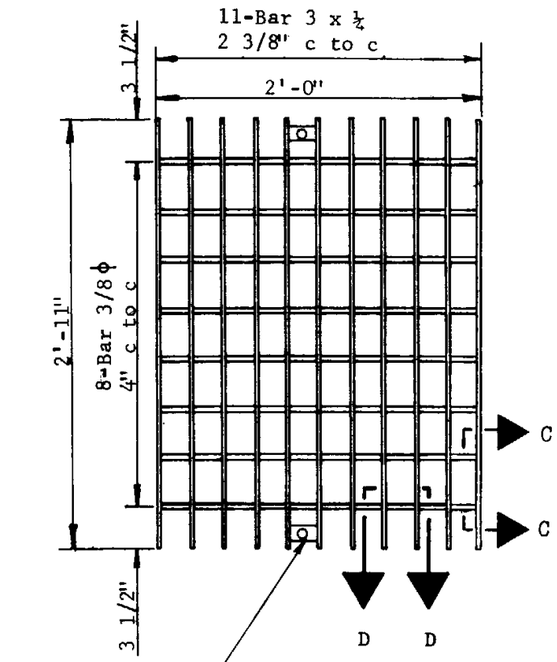

PLAN

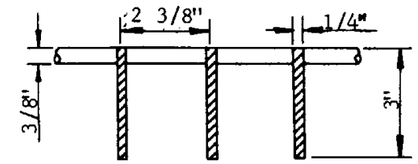

SECT. D-D

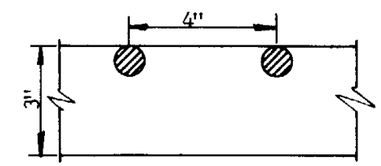

SECT. C-C

GRATE (3-REQ'D)

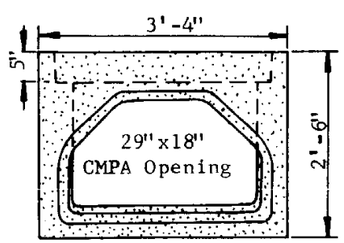

END VIEW

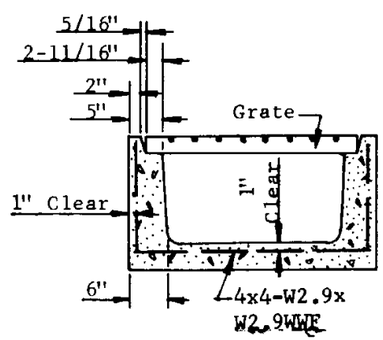

SECTION B-B

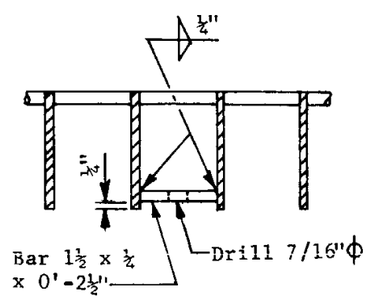

BOLT DOWN CLIP DETAIL

GENERAL NOTES:

1. Concrete shall conform to the requirements of Structural Concrete for Minor Precast Structures. The minimum compressive strength shall be 4000 psi.
2. Grout shall be in accordance with specification 605-3.03 except water content shall be such that the consistancy is proper for smooth trowling.
3. Grate cross rods shall be resistance welded, fillet welded or electro-forged to bearing bars.
4. The completed grate shall be given one shop coat of No. 1 paint.
5. Foundation soil and backfill shall be compacted to not less than 95% of the maximum densty determined in accordance with the requirements of the Materials Testing Manual of the Materials Services.

DESIGN APPROVED	STATE OF ARIZONA DEPARTMENT OF TRANSPORTATION DIVISION OF HIGHWAYS STANDARD DRAWINGS	REV. 8-78
APPROVED FOR DISTRIBUTION	CATCH BASIN, MEDIAN DYKE, PRECAST	DRAWING NO. C-15.10.1

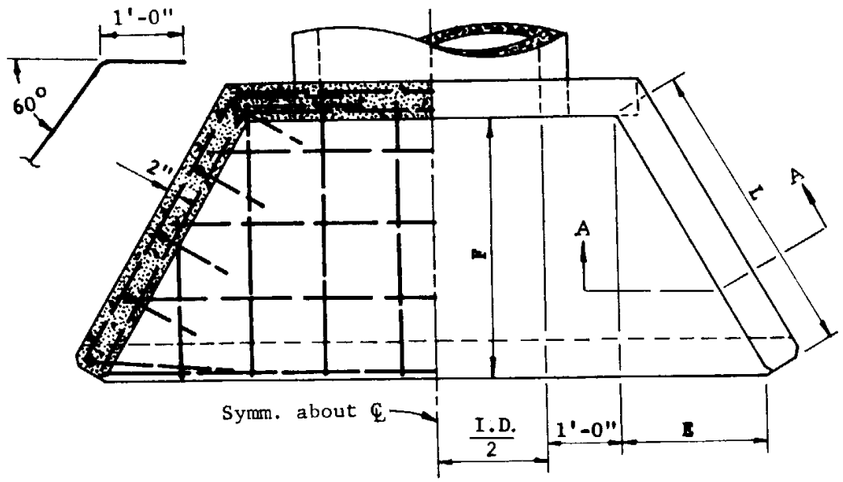

PLAN

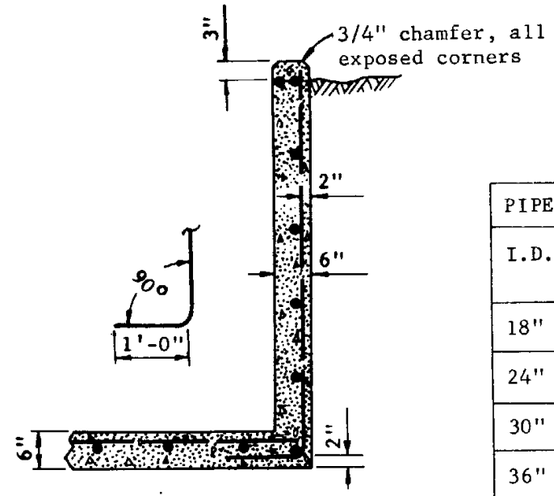

SECTION A-A

PIPE	DIMENSIONS			QUANTITIES		
I.D.	L	E	F (Approx)	C.Y. Conc. C.M.P.	C.Y. Conc. R.C.P.	Reinf.Steel Lbs.
18"	2'-0"	1'-0"	1'-9"	0.97	0.96	65
24"	2'-0"	1'-0"	1'-9"	1.11	1.07	78
30"	3'-0"	1'-6"	2'-7"	1.50	1.44	108
36"	4'-0"	2'-0"	3'-6"	2.08	2.01	150
42"	5'-0"	2'-6"	4'-4"	2.71	2.63	205
48"	6'-0"	3'-0"	5'-2"	3.39	3.30	270
54"	7'-0"	3'-6"	6'-1"	4.14	4.02	335
60"	8'-0"	4'-0"	6'-11"	4.96	4.80	410

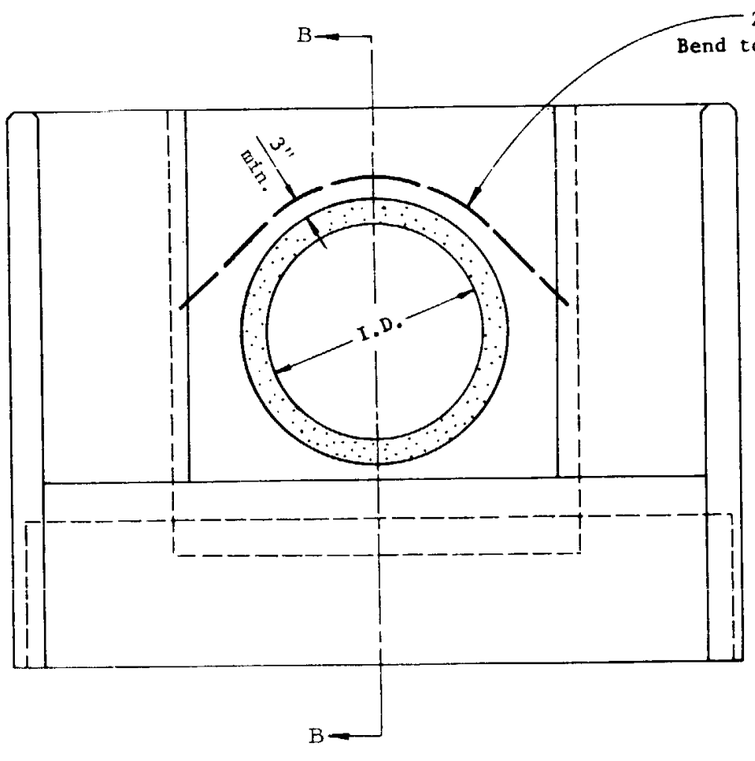

ELEVATION

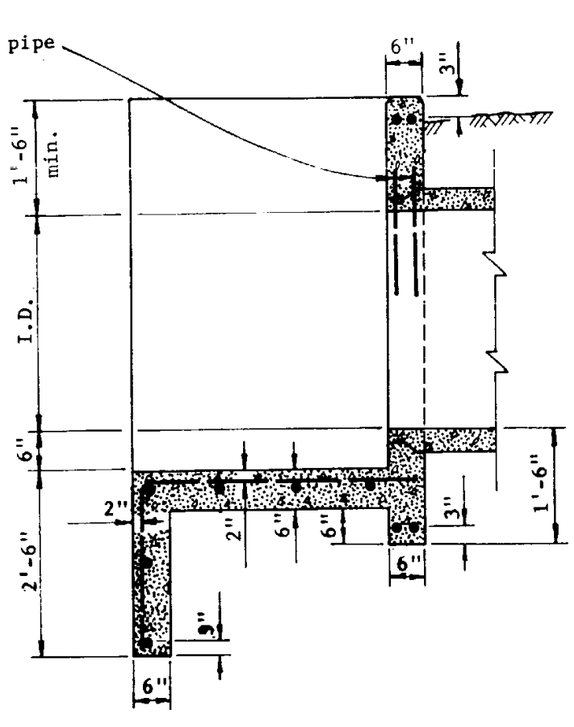

SECTION B-B

GENERAL NOTES

All concrete shall be Class A.

All reinforcing bars shall be #4 except two #6 bars over pipe. Bar spacing approximately 1'-0" c to c unless otherwise noted.

30° wing wall flare shown; 45° normally desirable. See Hydraulics and Utility & R.R. Engr. Divisions.

DESIGN APPROVED	STATE OF ARIZONA DEPARTMENT OF TRANSPORTATION DIVISION OF HIGHWAYS STANDARD DRAWINGS	REV
APPROVED FOR DISTRIBUTION	Irrigation Headwalls 18" to 60" Diameter Pipes	DRAWING NO. C-16.01

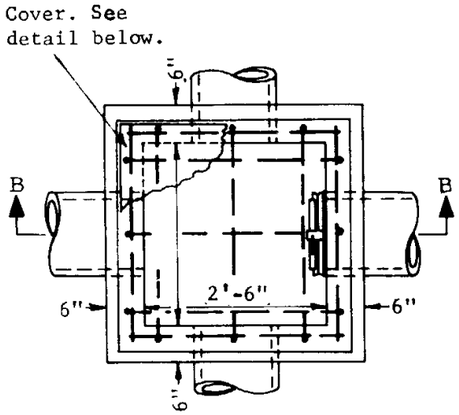

PLAN

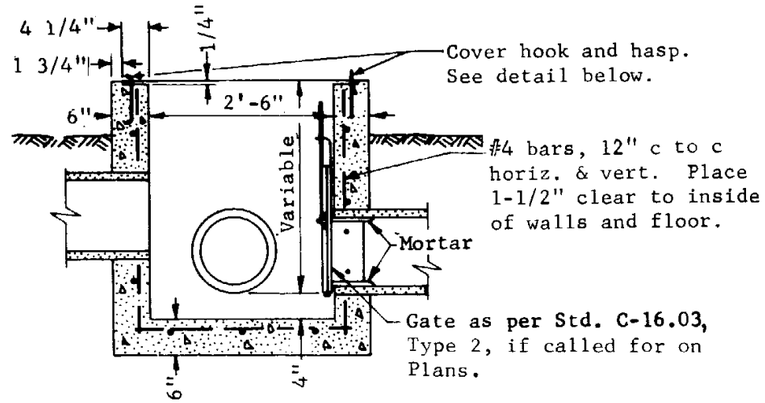

SECTION B-B

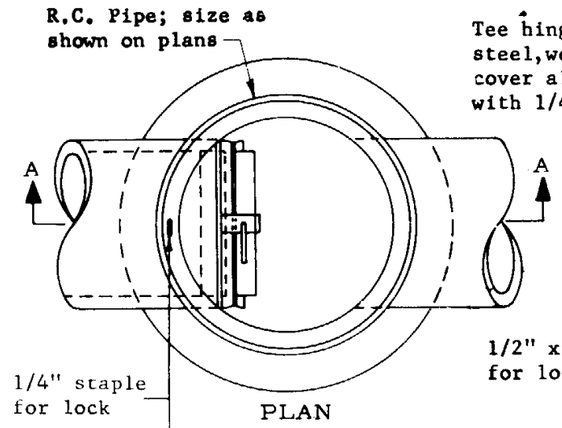

PLAN

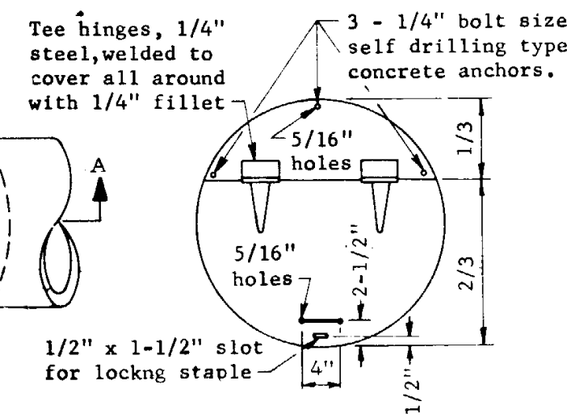

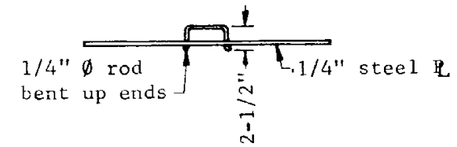

COVER FOR NO. 1 STANDPIPE

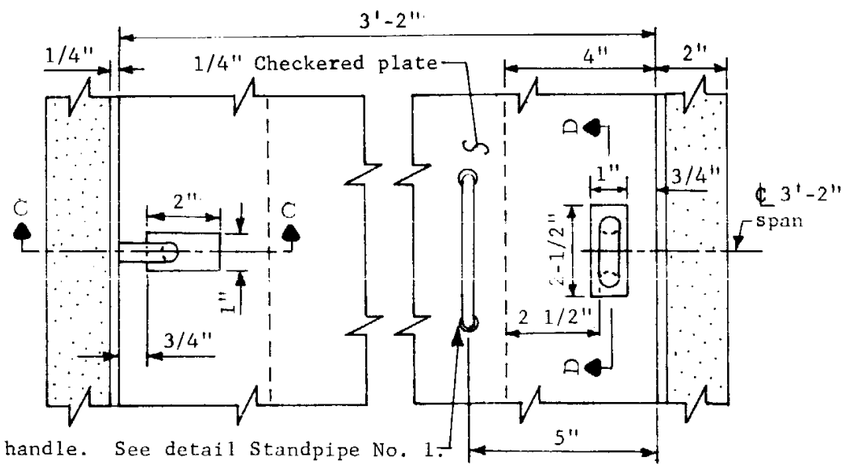

PLAN-LOCKING COVER

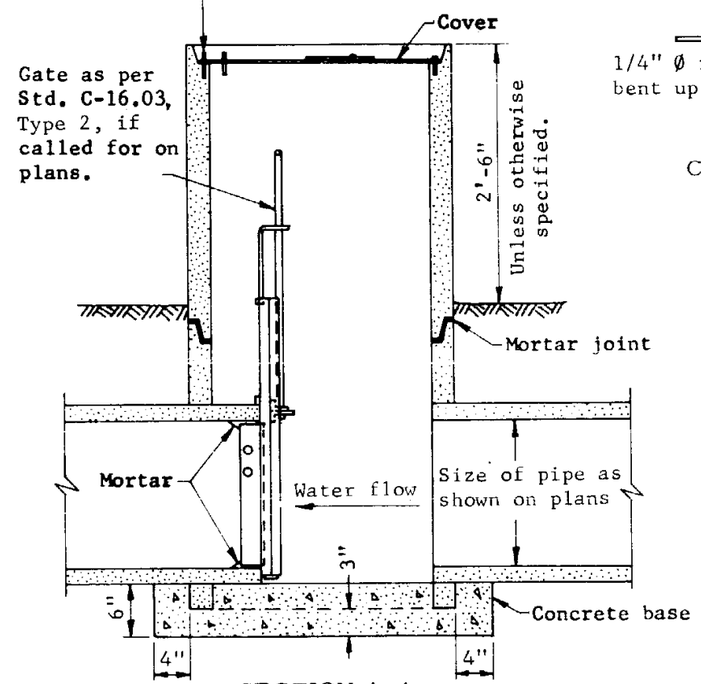

SECTION A-A

IRRIGATION STANDPIPE NO. 1

GENERAL NOTES

All concrete shall be Class A.

Structural steel shall be in accordance with ASTM A 36.

All cover steel and exposed appurtenances shall be given one shop coat of No. 1 paint.

Plans shall specify locked or bolted cover for Standpipe No. 2

For specific details of a flush pavement or sidewalk installation, see Utility & Railroad Engineering Div.

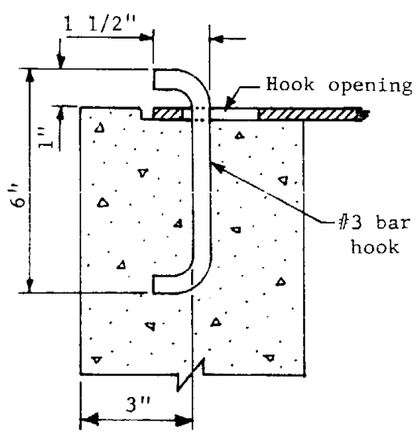

SECTION C-C

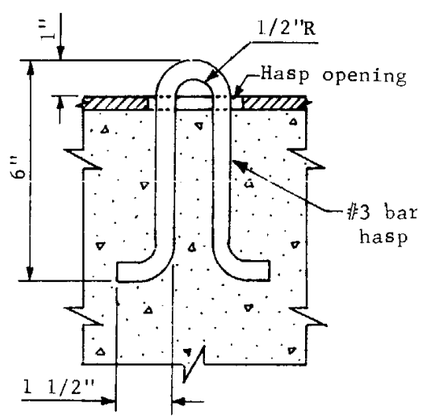

SECTION D-D

IRRIGATION STANDPIPE NO. 2

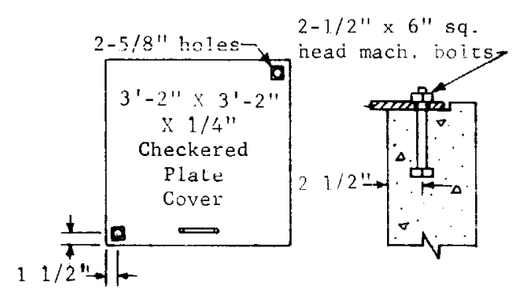

BOLTED COVER FOR STANDPIPE NO. 2

DESIGN APPROVED	STATE OF ARIZONA DEPARTMENT OF TRANSPORTATION DIVISION OF HIGHWAYS STANDARD DRAWINGS	REV. 6/74
APPROVED FOR DISTRIBUTION	Irrigation Standpipes	DRAWING NO. C-16.02

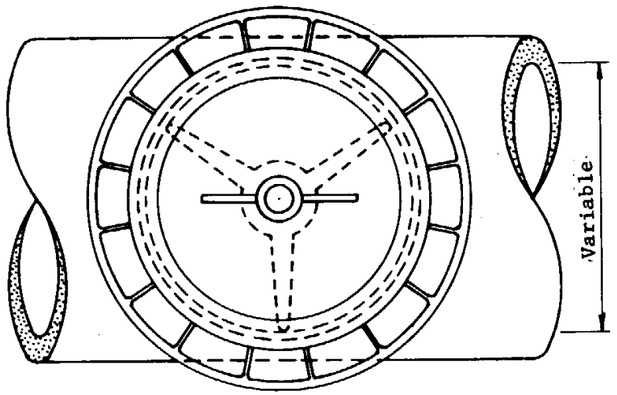

PLAN

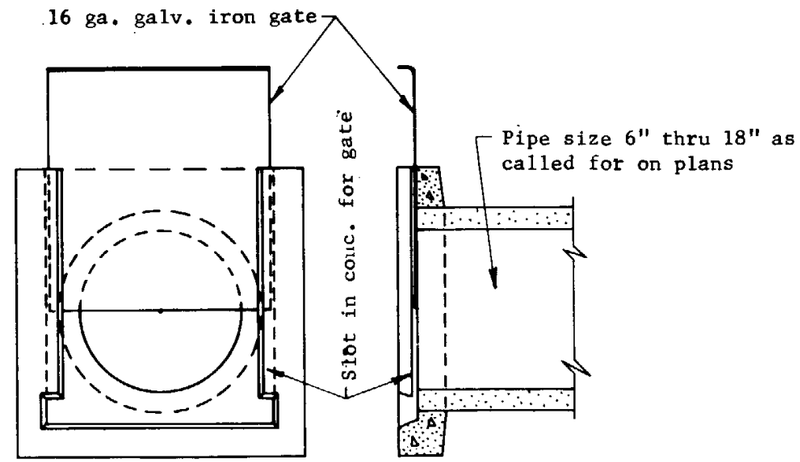

ELEVATION SECTION

PRECAST IRRIGATION GATE
For open ditch installation
TYPE 1

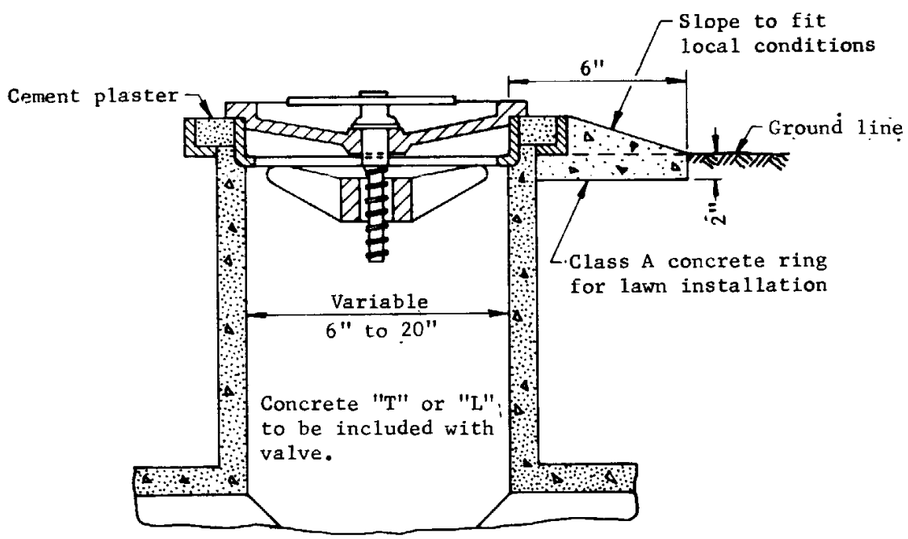

Irrigation Valve Number of valve shall correspond to the size of the pipe in inches. No. 6 to No. 20.

PART SECTION
FLUSH IRRIGATION VALVE,

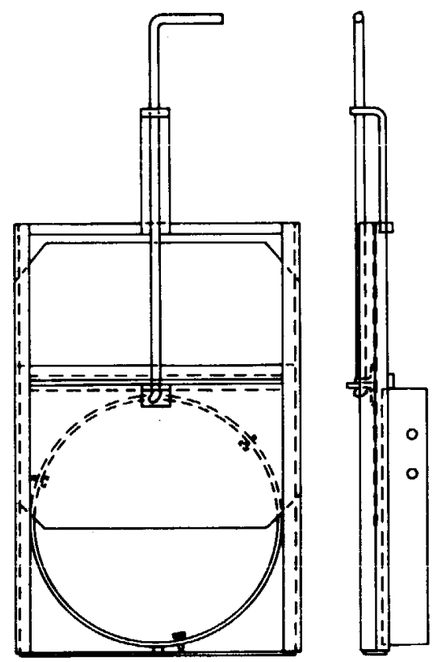

ELEVATION SECTION

IRRIGATION GATE
For standpipe installation
TYPE 2

TYPE 2

For pipes 6" through 24". Gate and frame shall be galvanized iron. Type shown is for concrete pipe. For C.M.P., external steel adjustable band shall be used in place of internal steel ring.

DESIGN APPROVED	STATE OF ARIZONA DEPARTMENT OF TRANSPORTATION DIVISION OF HIGHWAYS STANDARD DRAWINGS	REV.
APPROVED FOR DISTRIBUTION	Irrigation Valve & Gate	DRAWING NO. C-16.03

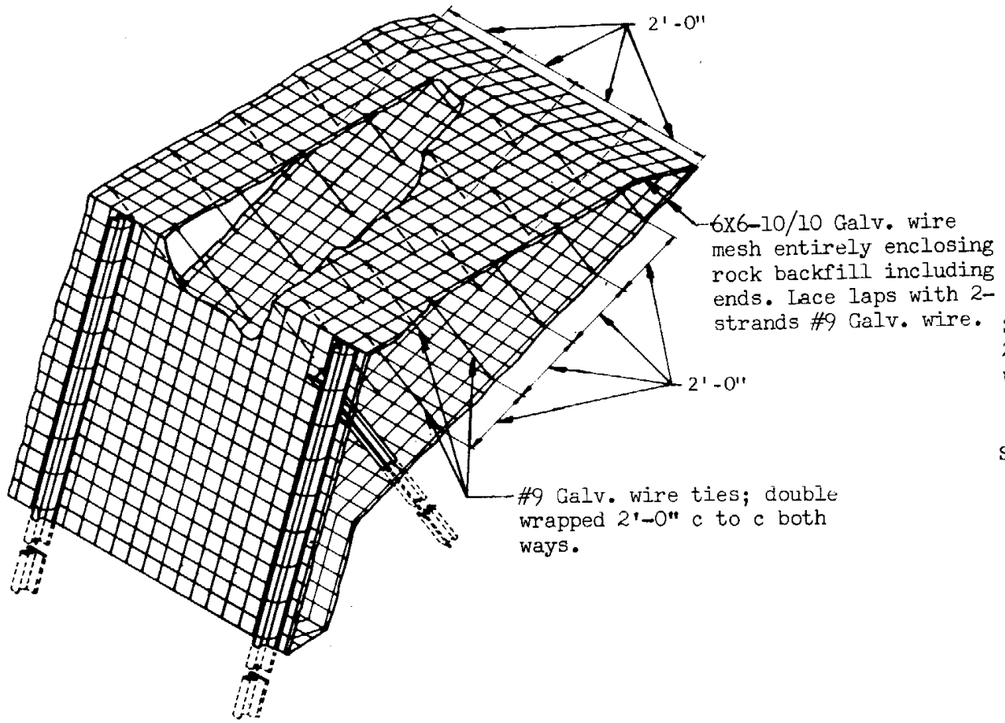

PERSPECTIVE
Drawn for Types 1 & 2. Type 3 similar.

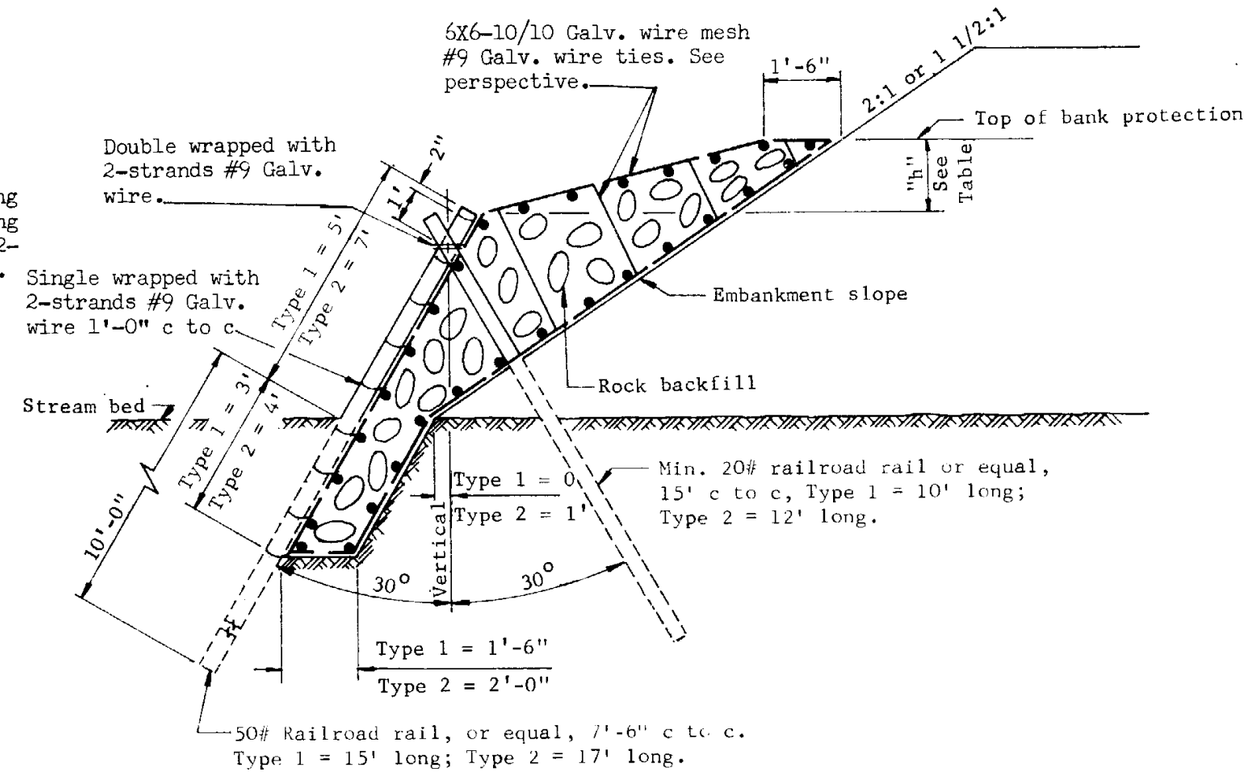

TYPE : TYPE 1 & 2 BANK PROTECTION

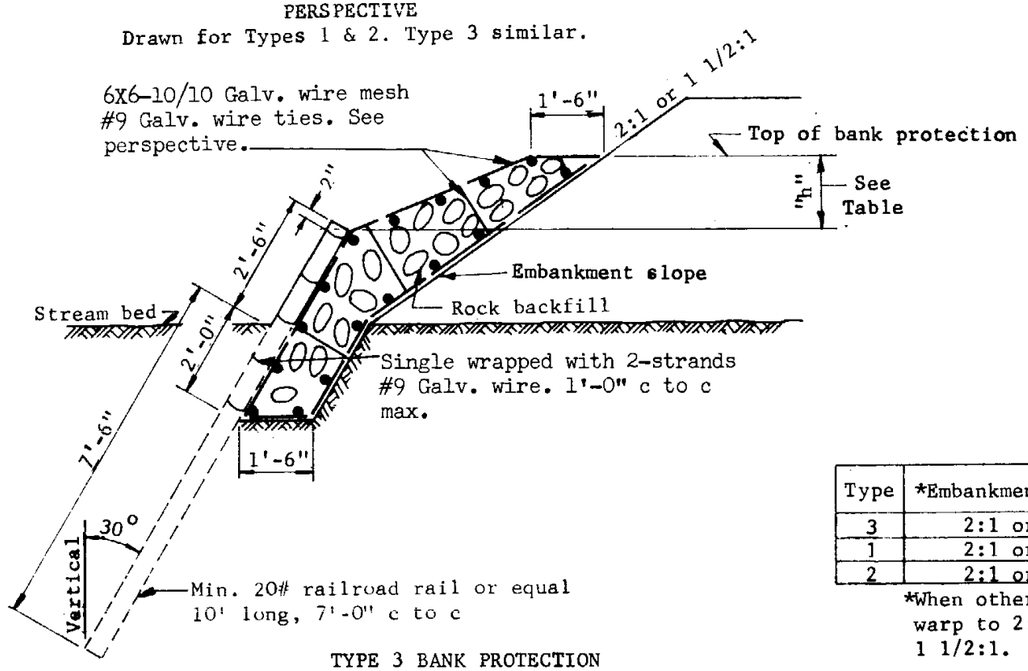

TYPE 3 BANK PROTECTION

Type	*Embankment slope rate	"h"	Top of bank protection above stream bed
3	2:1 or 1 1/2:1	0' to 2'	2' to 4'
1	2:1 or 1 1/2:1	0' to 3'	4' to 7'
2	2:1 or 1 1/2:1	0' to 6'	6' to 12'

*When other embankment slope rates are encountered, warp to 2:1 or 1 1/2:1; that is, warp 1:1 slope to 1 1/2:1.

GENERAL NOTES

Rock shall be sound and durable, of rounded or angular shape and with a nominal diameter of 8" min. and 12" max. Flat or needle shapes are not acceptable.

DESIGN APPROVED	STATE OF ARIZONA DEPARTMENT OF TRANSPORTATION DIVISION OF HIGHWAYS STANDARD DRAWINGS	REV 6/74
APPROVED FOR DISTRIBUTION	Bank Protection Types 1, 2 & 3	DRAWING NO C-17.01

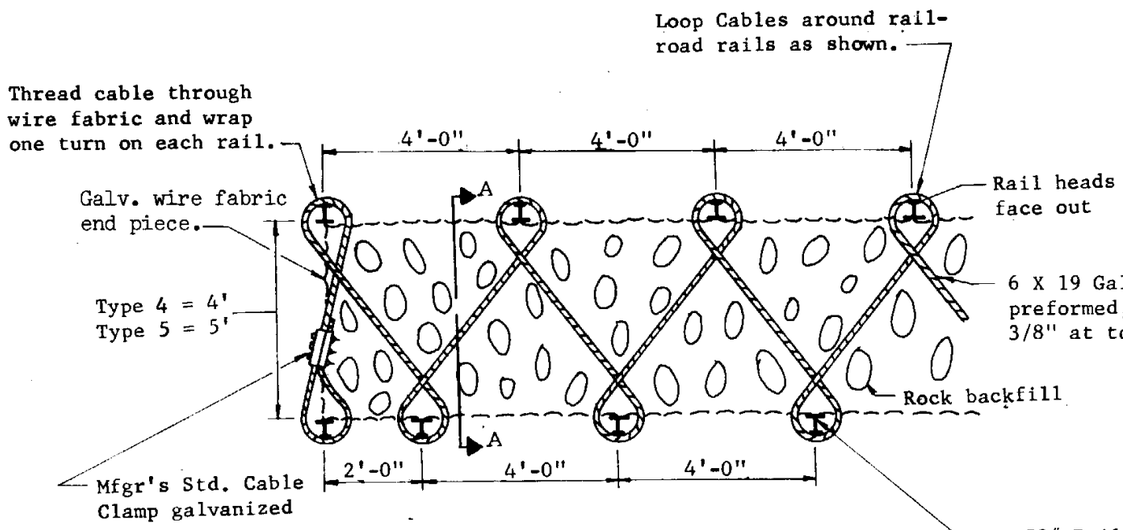

PLAN

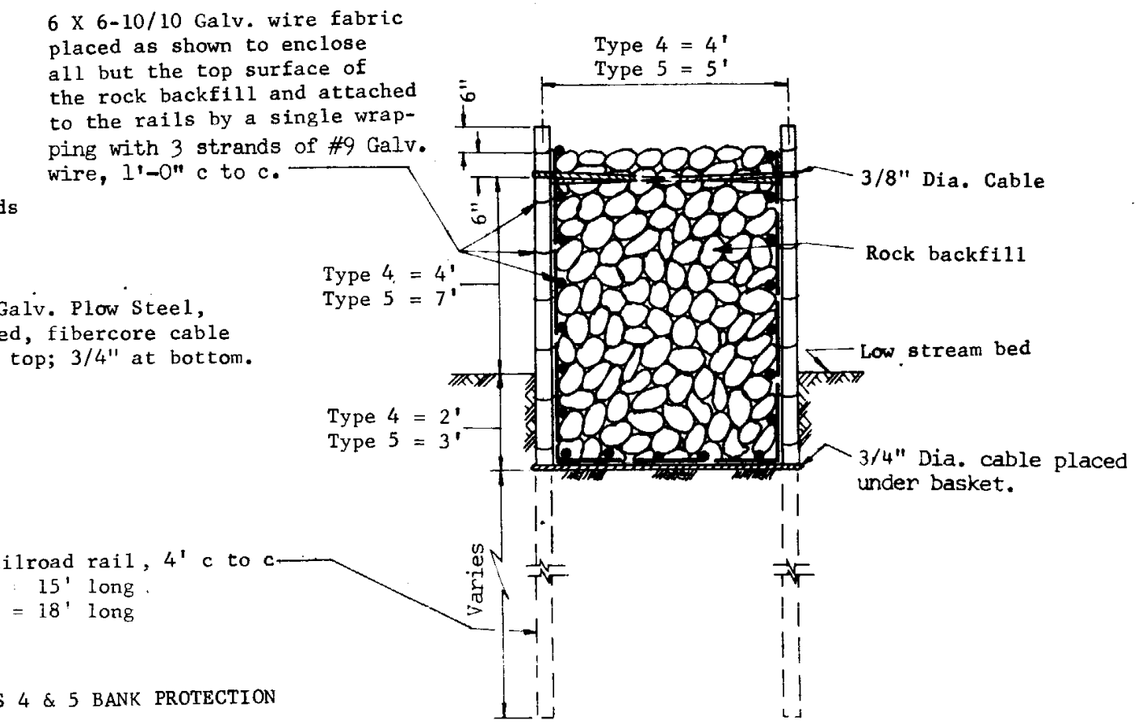

TYPES 4 & 5 BANK PROTECTION

SECTION A-A

2" X 4" Δ galv. woven wire fabric; horizontal wires shall be 2 strands, twisted, min. 12 1/2 ga; diagonal wires min. 14 ga. Attach to rails as shown by single wrapping with 2 strands of #9 Galv. wire.

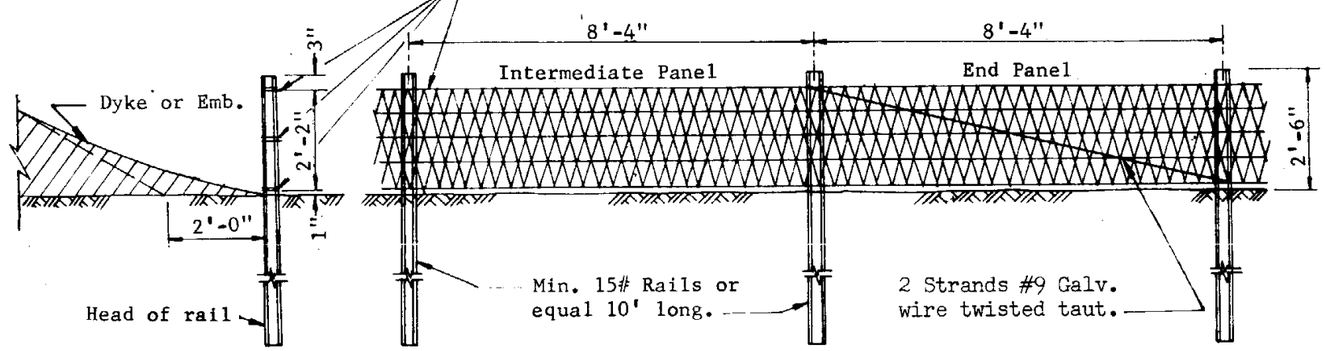

TYPE 6 BANK PROTECTION

GENERAL NOTES

Rock shall be sound and durable, of rounded or angular shape and with a nominal diameter of 8" min. and 21" max. Flat or needle shapes are not acceptable. Rock shall be comprised of 50% min. 8" to 12" and 5% max. 18" to 21".

DESIGN APPROVED	STATE OF ARIZONA DEPARTMENT OF TRANSPORTATION DIVISION OF HIGHWAYS STANDARD DRAWINGS	REV. 6/74
APPROVED FOR DISTRIBUTION	Bank Protection Types 4, 5 & 6	DRAWING NO. C-17.02

HALF PLAN

BRICK CONCRETE

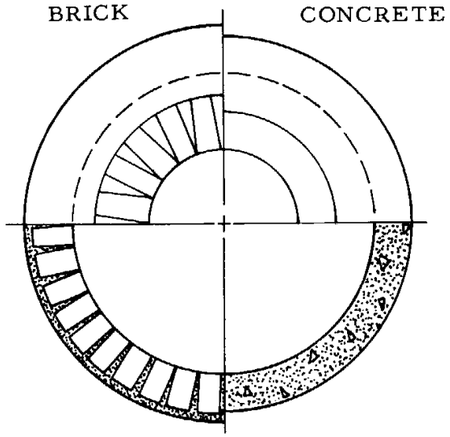

SECTION A-A

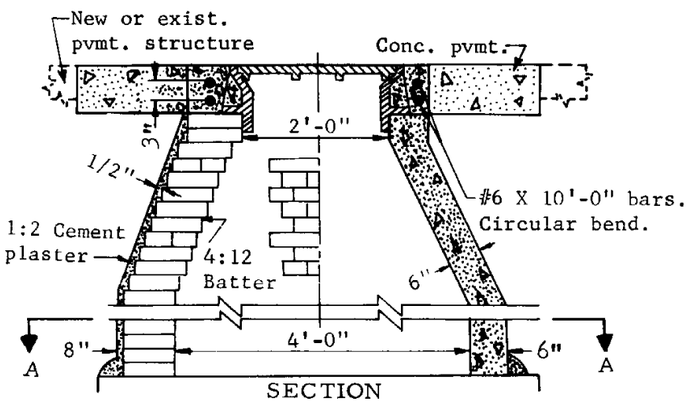

SECTION

BRICK
MANHOLE NO. 1

CONCRETE
MANHOLE NO. 2

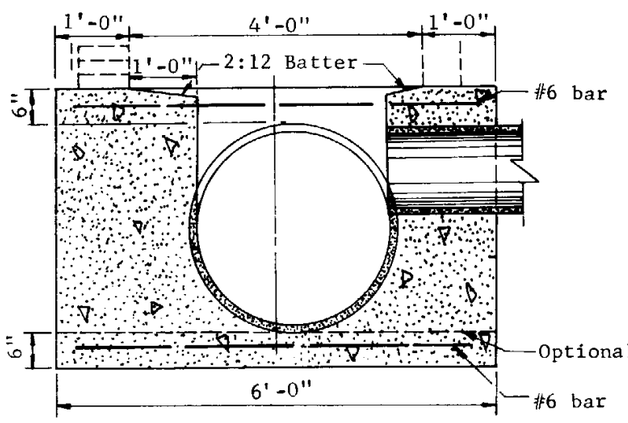

SECTION
STANDARD BASE STRUCTURE
FOR PIPES 6" TO 36" I.D.

HALF PLAN
PIPES 36" I. D. & SMALLER

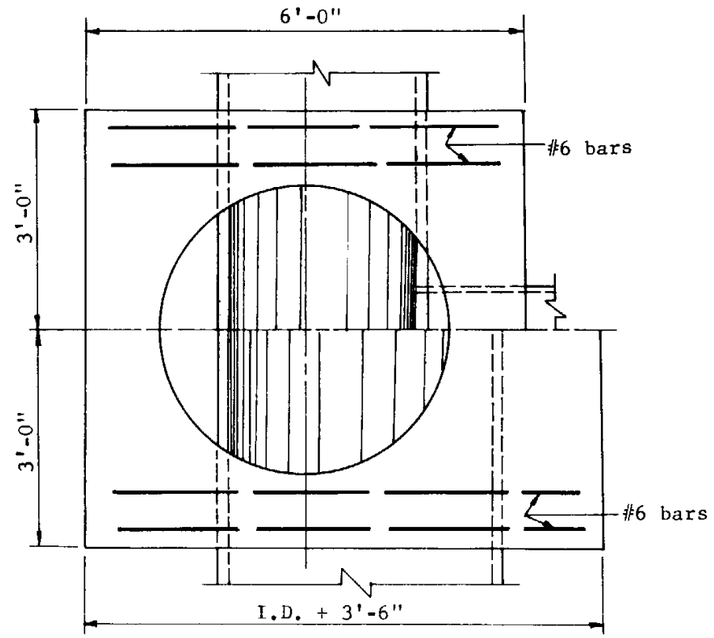

HALF PLAN
PIPES OVER 36" I. D.

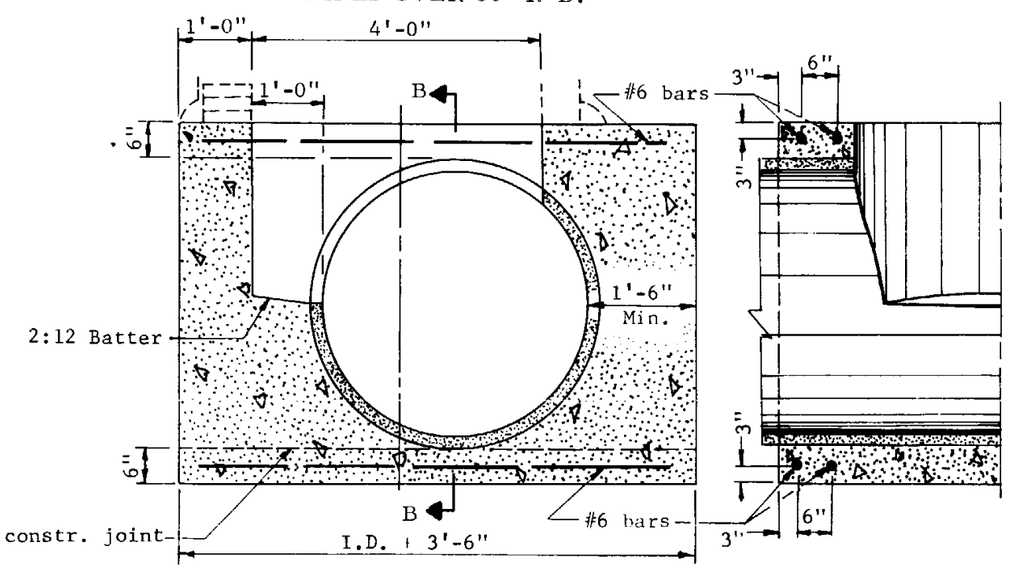

PART SECTION
B-B

SECTION
STANDARD BASE STRUCTURE
FOR PIPES OVER 36" I. D.

GENERAL NOTES:

1. Precast manholes shall conform to the requirements of AASHTO M 199 except that the compressive strength of each unit will be determined and accepted in accordance with Section 516 of the ADOT Specifications. Concrete for all other manholes shall be Class A.
2. Every fifth course of bricks in Manhole No. 1 shall be laid as stretchers.
3. For manhole cut and replacement of bituminous or concrete pavement see Std. C-7.03.
4. For Std. C-18.02 frame and cover type, see Plans.

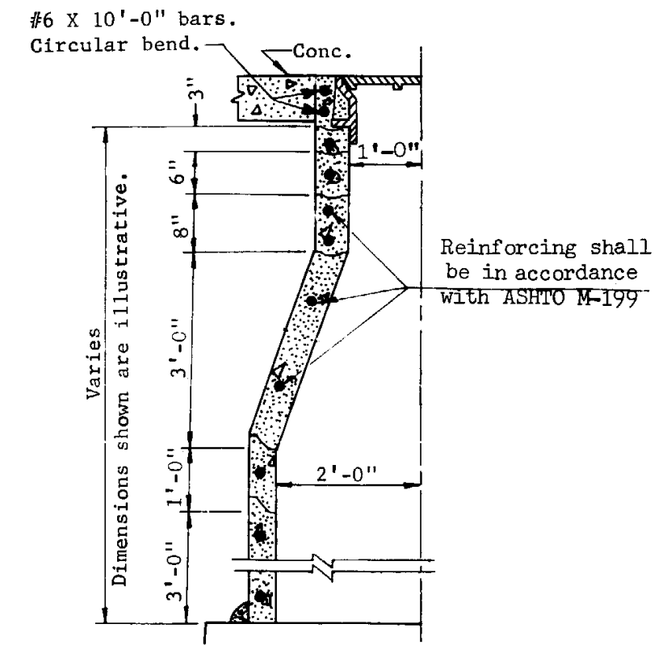

HALF SECTION
MANHOLE NO. 3
PRECAST REINFORCED CONCRETE

DESIGN APPROVED	STATE OF ARIZONA DEPARTMENT OF TRANSPORTATION DIVISION OF HIGHWAYS STANDARD DRAWINGS	REV. 8-78
APPROVED FOR DISTRIBUTION	Manhole Details	DRAWING NO. C-18.01

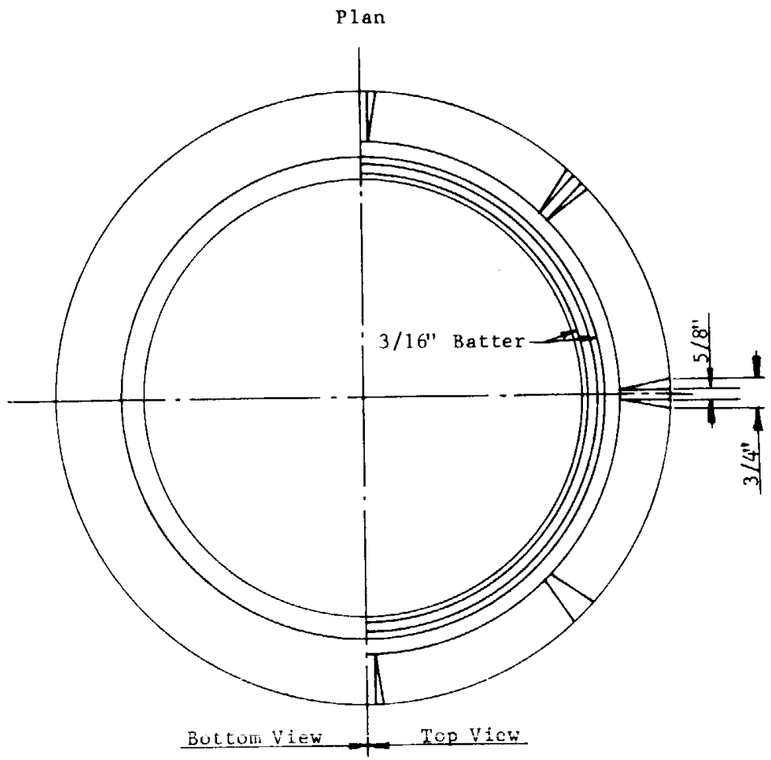

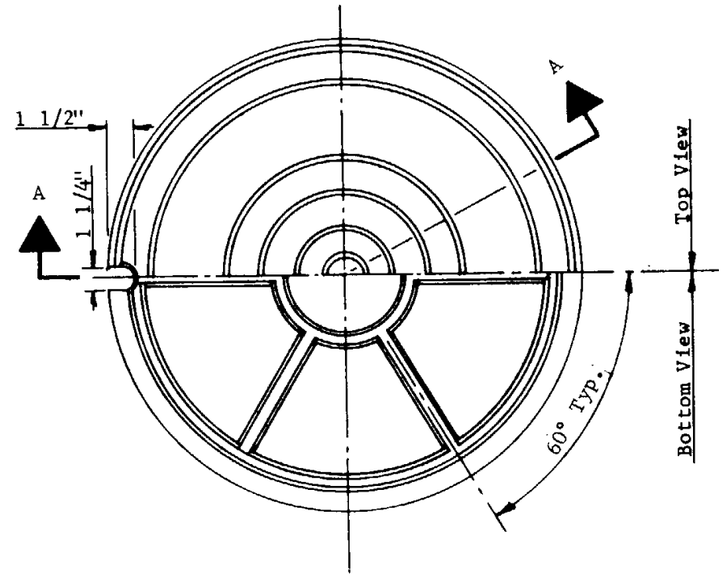

GENERAL NOTES

The bearing faces shall be machined so that the cover will have a uniform bearing in any position in the frame.

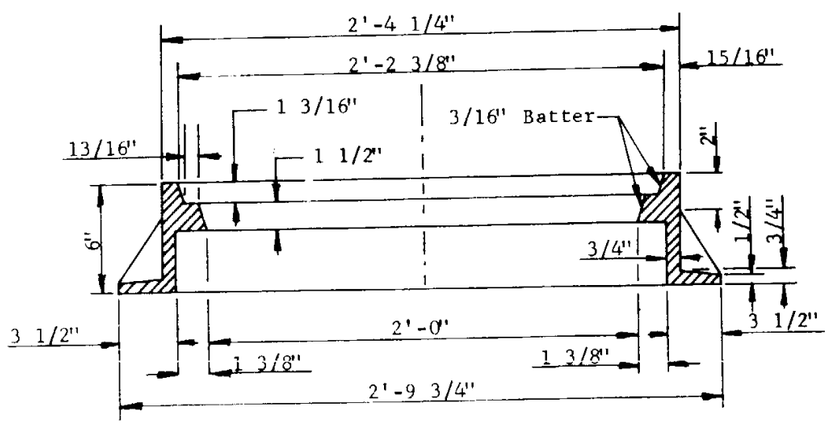

Section

FRAME
APPROX. WT. 200 LBS.

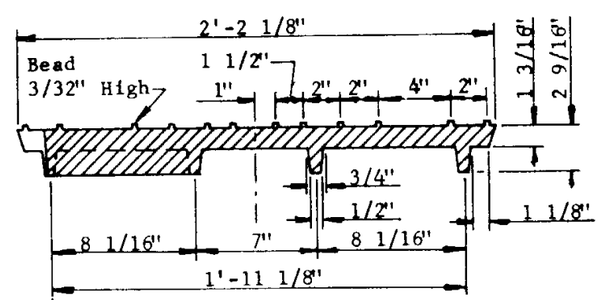

Section A-A

COVER
APPROX. WT. 200 LBS.

DESIGN APPROVED	STATE OF ARIZONA DEPARTMENT OF TRANSPORTATION DIVISION OF HIGHWAYS STANDARD DRAWINGS	REV 7/75
APPROVED FOR DISTRIBUTION	MANHOLE FRAME & COVER	DRAWING NO C-18.02

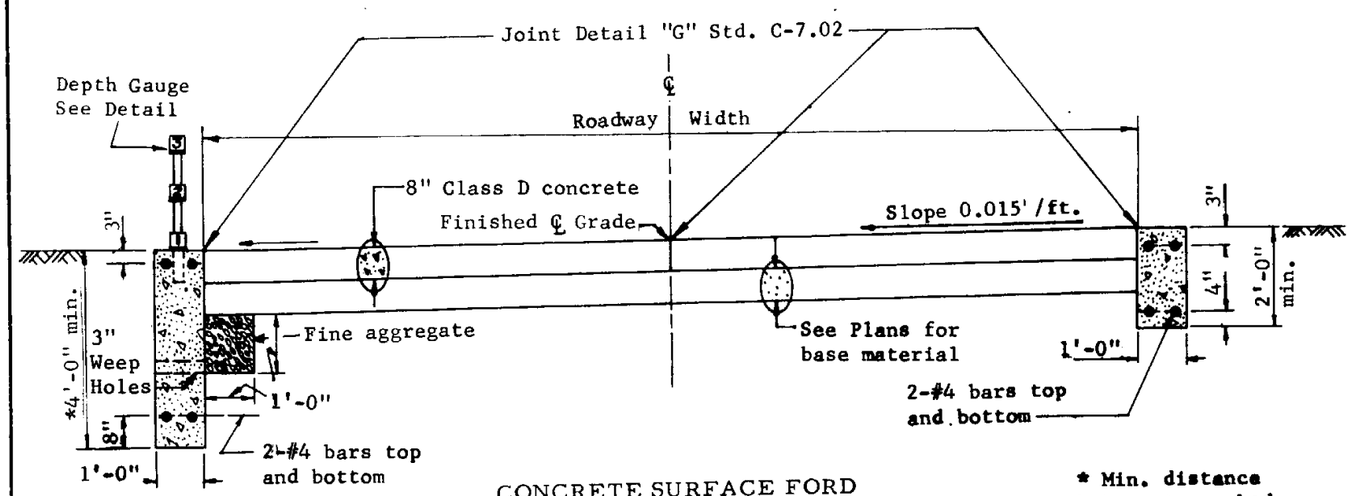

CONCRETE SURFACE FORD
CONCRETE WALLS

* Min. distance below stream bed

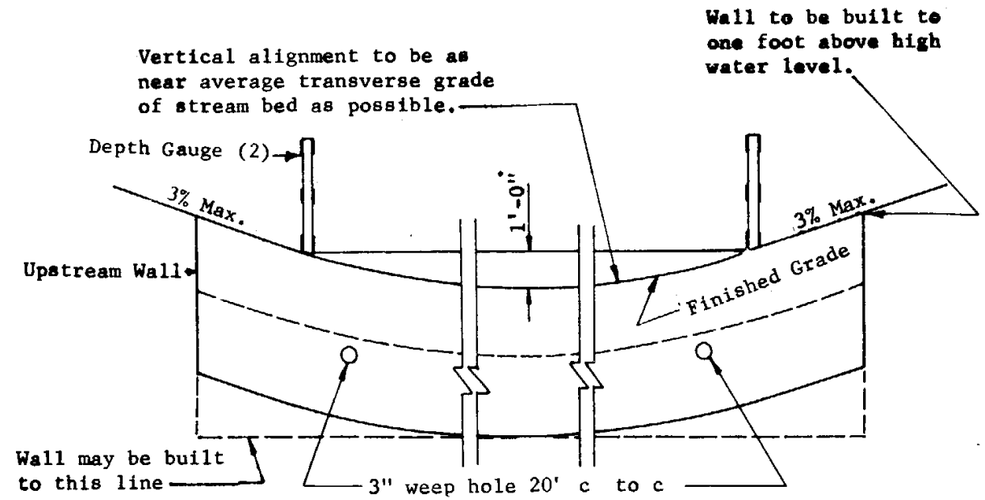

ELEVATION LOOKING UPSTREAM

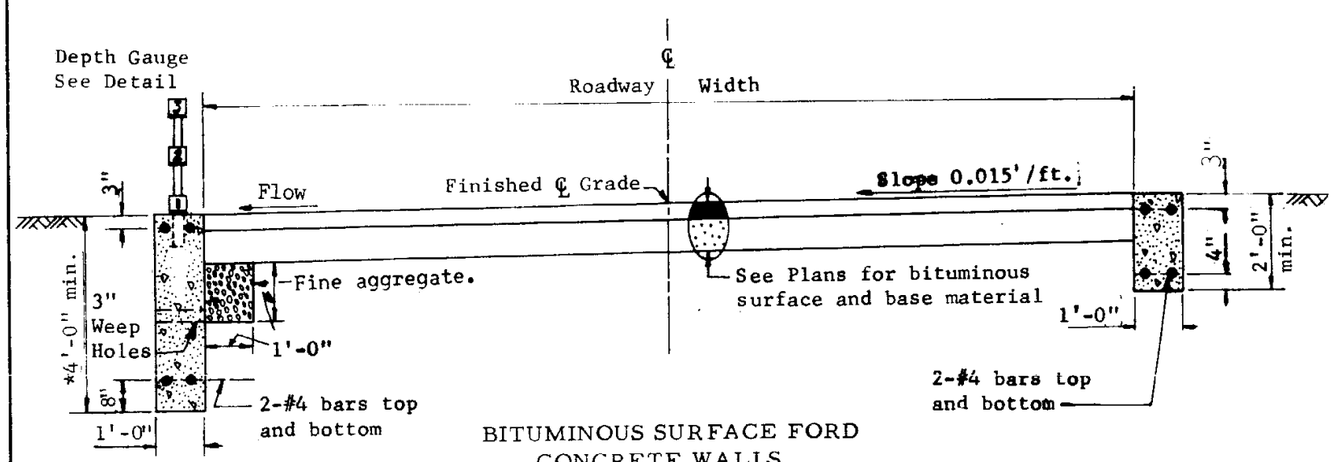

BITUMINOUS SURFACE FORD
CONCRETE WALLS

GENERAL NOTES

Ford walls shall be class A concrete.

Depth Gauge tubing shall be protected against concrete entering through bottom of perforations.

Depth Gauge tubing and both sides of numeral tabs shall be painted 2- coats white enamel. Numerals and markers shall be 1-coat black enamel.

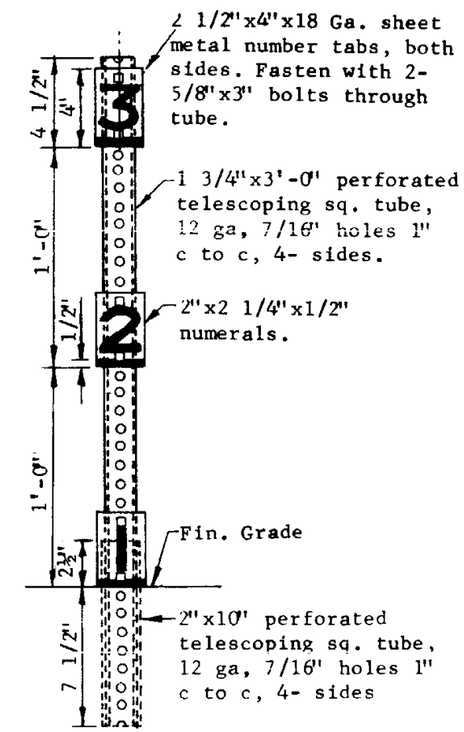

DEPTH GAUGE DETAIL

DESIGN APPROVED	STATE OF ARIZONA DEPARTMENT OF TRANSPORTATION DIVISION OF HIGHWAYS STANDARD DRAWINGS	REV. 6/74
APPROVED FOR DISTRIBUTION	FORD- CONCRETE WALLS	DRAWING NO. C-19.01

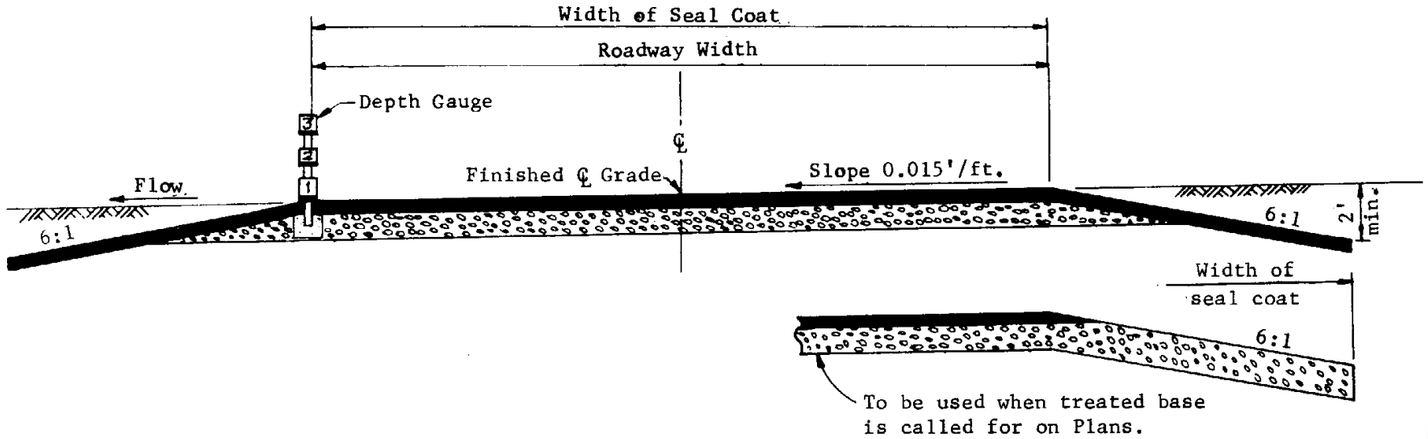

TYPE 1
BITUMINOUS SURFACE FORD

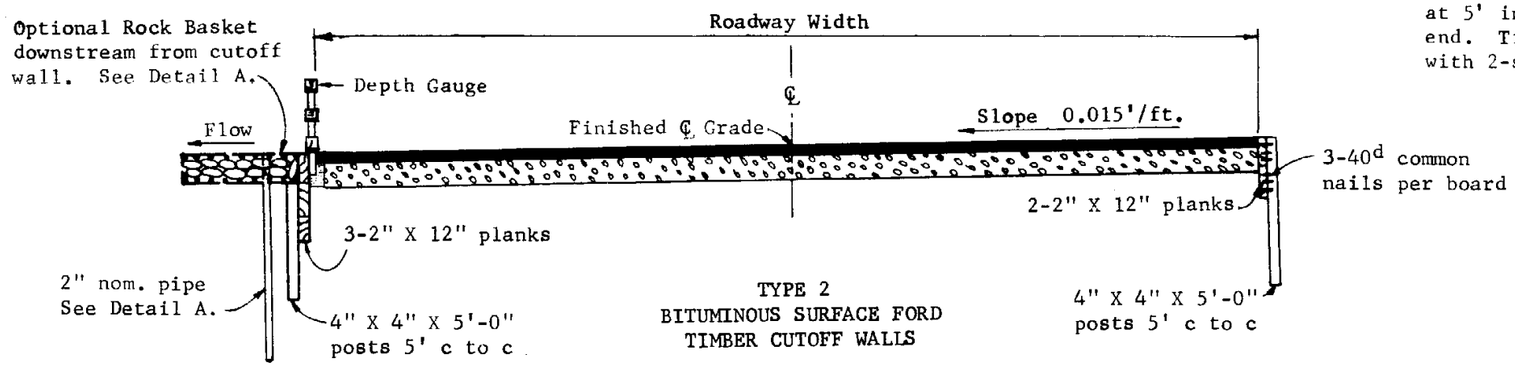

TYPE 2
BITUMINOUS SURFACE FORD
TIMBER CUTOFF WALLS

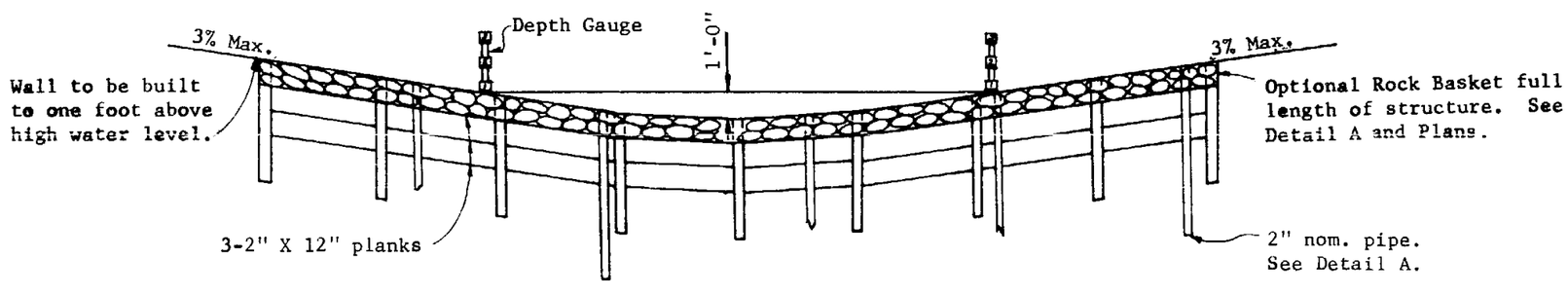

ELEVATION - TYPE 2

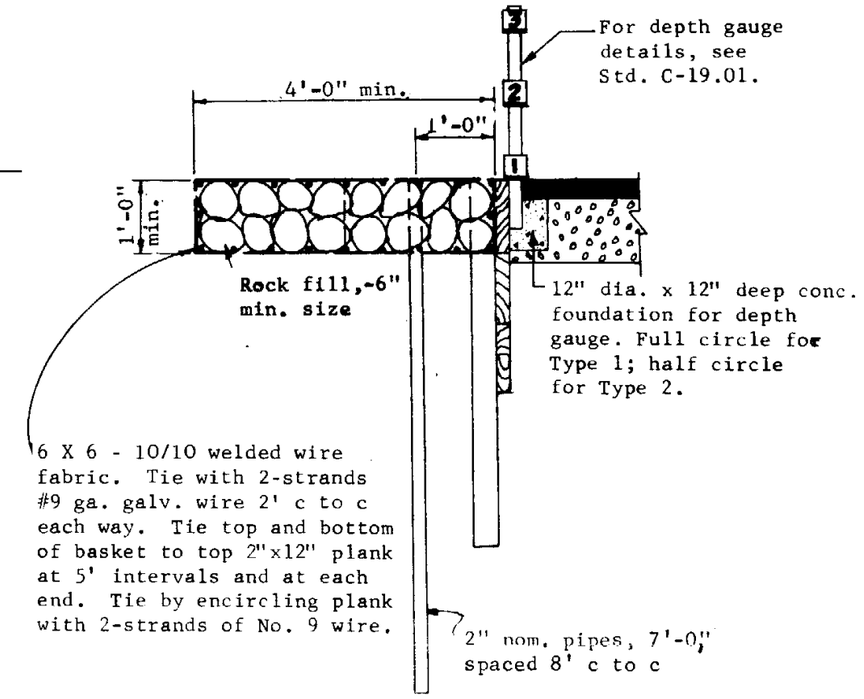

DETAIL A

GENERAL NOTES

All timber shall be rough, pressure treated and unpainted.

Rock basket, full length of structure, shall be included only when called for on Plans.

See Plans for bituminous surface and base material details.

See Std. C-19.01 for Depth Gauge details.

Depth Gauge foundation may be job mix concrete of not less than 5-sacks/C.Y.

DESIGN APPROVED	STATE OF ARIZONA DEPARTMENT OF TRANSPORTATION DIVISION OF HIGHWAYS STANDARD DRAWINGS	REV 6/74
APPROVED FOR DISTRIBUTION	FORDS, TYPES 1 & 2	DRAWING NO C-19.02

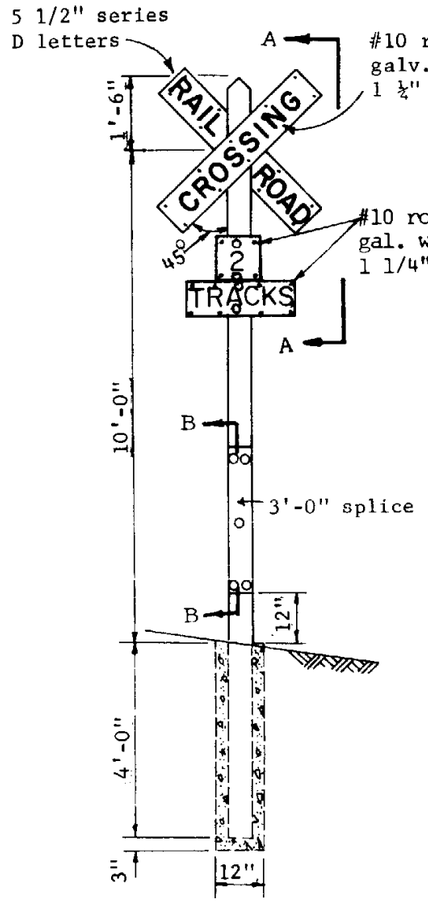

RAILROAD CROSSING SIGN

Concrete may be job mix concrete of not less than 5 sacks per cu. yd.

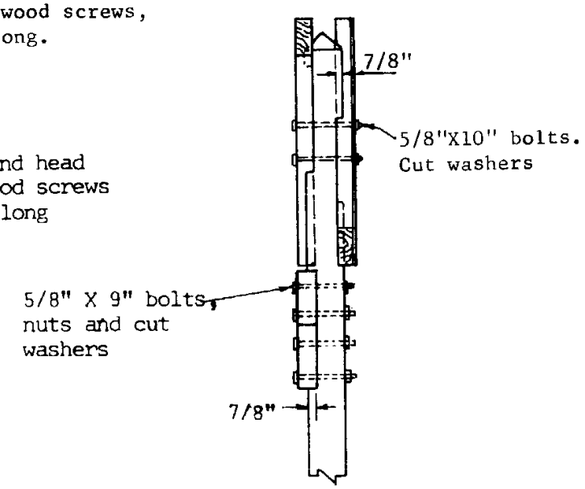

SECTION A-A

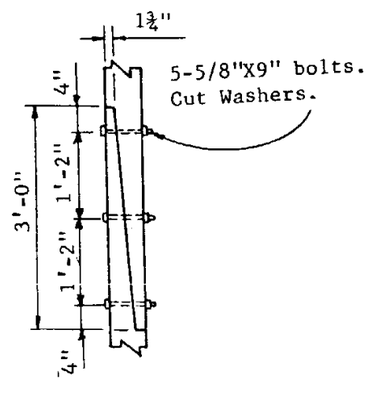

SECTION B-B

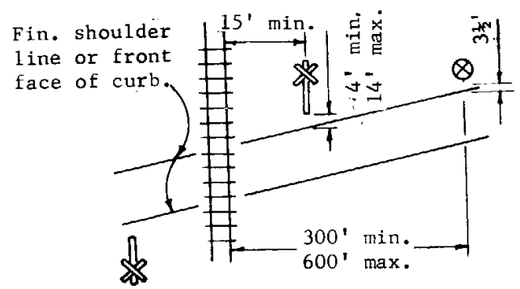

LOCATION PLAN

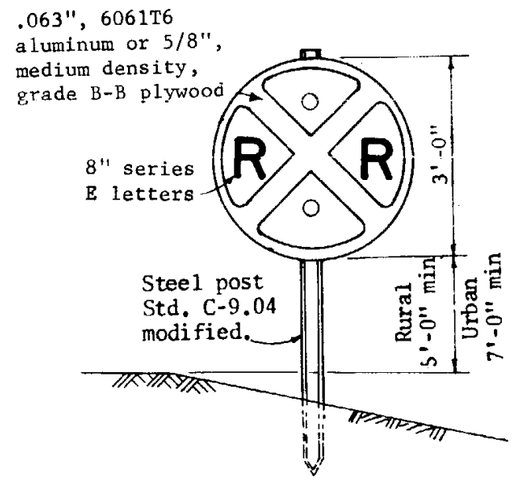

RAILROAD ADVANCE WARNING SIGN

GENERAL NOTES

All wood shall be redwood or cedar, S4S and untreated.

Crossing and advance warning signs shall be placed at each approach with steel or aluminum message panels placed only on the side facing traffic.

"Number of tracks" panels shall be deleted for single track crossing.

All crossing sign message panel background shall be silver-white, flat top reflective sheeting with black, opague letters.

Advance warning sign traffic face background shall be highway yellow, flat top reflective sheeting with black, opague letters, border and symbol.

All wood and metal surfaces not covered by reflective sheeting shall be primed and finished with two coats of No. 11 white enamel.

Reflective sheeting shall be applied in accordance with the manufacturers specifications.

All lettering shall be in accordance with A.H.D. Traffic Control Manual

Number Panel: 9" X 8 1/2" X 16 ga. steel or .063 aluminum panel mounted on 9" X 8 1/2" X 1 5/8" redwood or cedar. 5 1/2" series D letters.

Track Panel: 2'-3" X 8" X 16 ga. steel or .063 aluminum panel mounted on 2'-3" X 1 5/8" redwood or cedar. 4" series D letters.

DESIGN APPROVED	STATE OF ARIZONA DEPARTMENT OF TRANSPORTATION DIVISION OF HIGHWAYS STANDARD DRAWINGS	REV 5/72
APPROVED FOR DISTRIBUTION	Railroad Crossing Signs	DRAWING NO. C-20.01

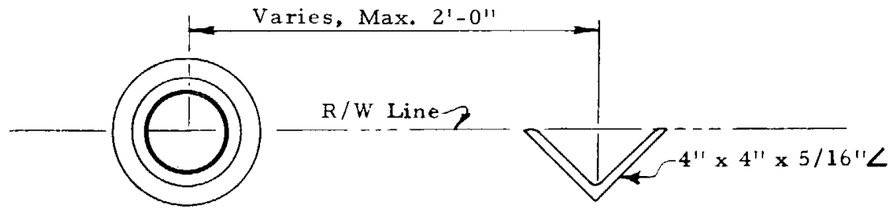

PLAN

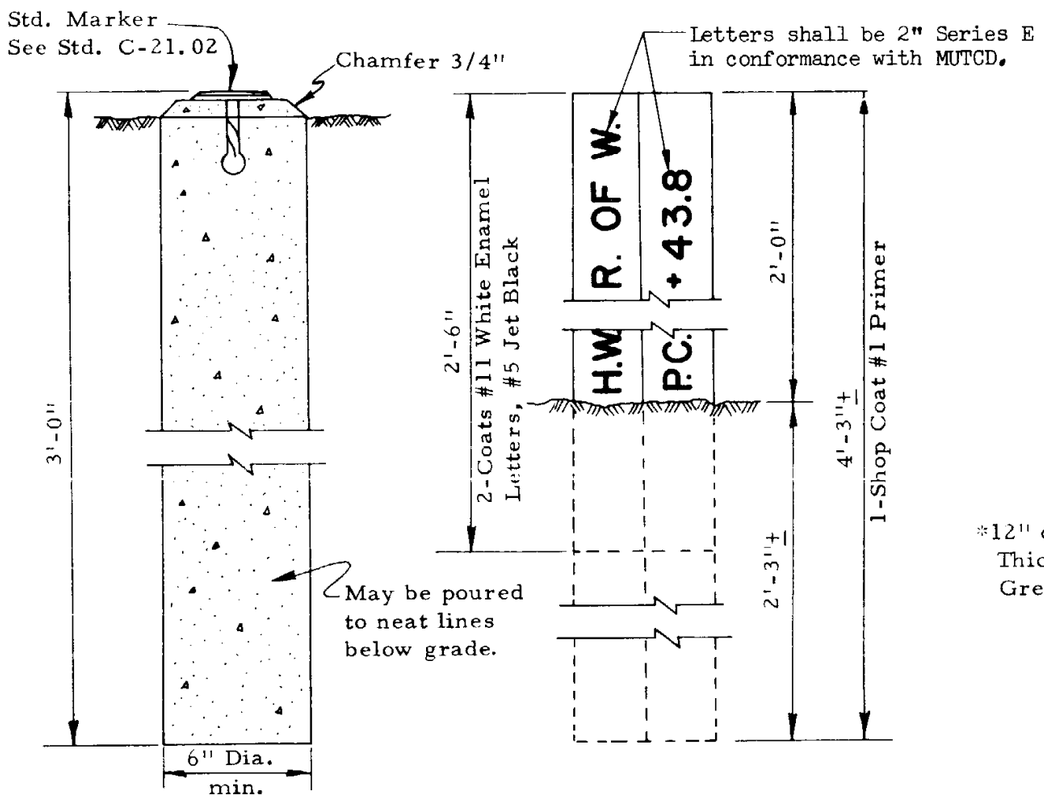

ELEVATION

Survey Monument

ELEVATION

Reference Marker

RIGHT OF WAY MARKER

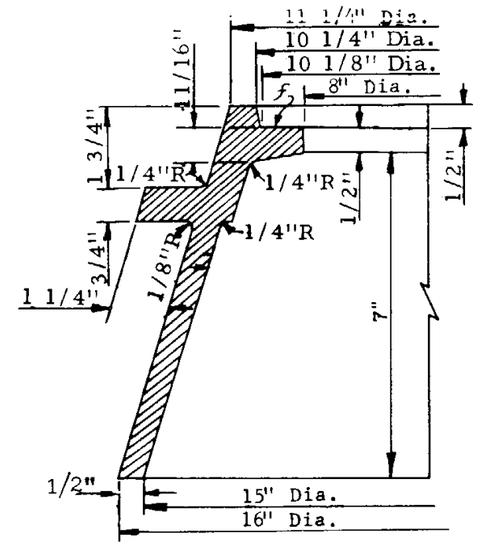

FRAME A

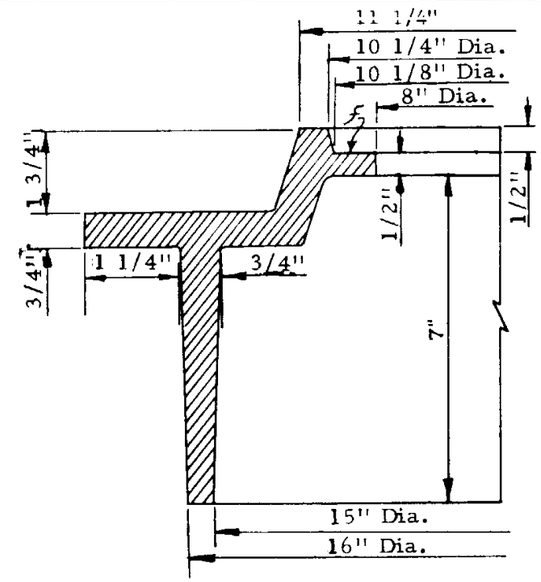

FRAME B

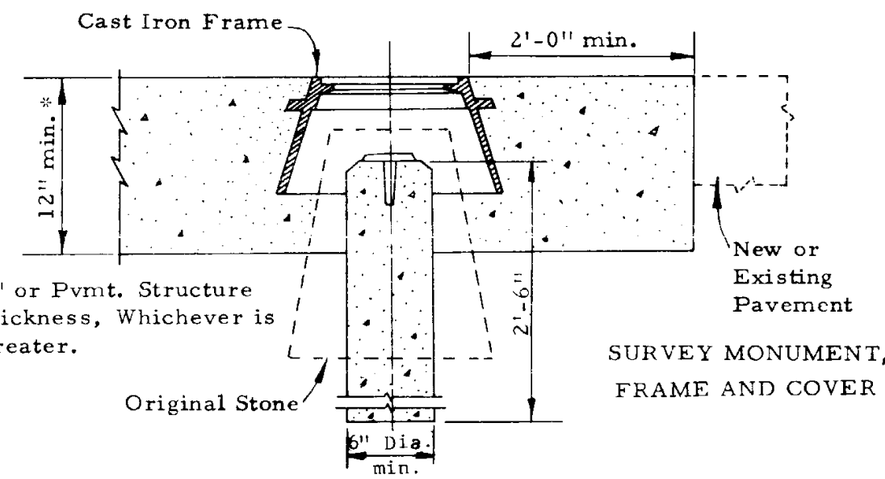

SURVEY MONUMENT,
FRAME AND COVER

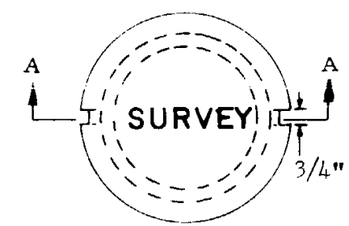

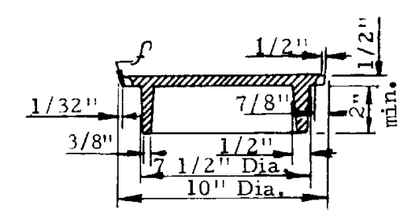

1/8" Fillets Cover Only

COVER SECTION

GENERAL NOTES

A survey monument, frame and cover, complete in place shall be considered a unit.

A Right-of-way marker, consisting of a survey monument and a reference marker, complete in place shall be considered a unit.

All markers shall be placed as shown on the plans or as directed by the engineer.

Frames may be either Type A or Type B. Frames shall weigh at least 63 pounds.

Covers shall weigh at least 16 pounds.

Portions of frame and cover to be machined is shown by the symbol "f". The allowable tolerances for machined areas shall be $\pm$ 1/64".

Concrete shall conform to the requirements of the specifications.

DESIGN APPROVED	STATE OF ARIZONA DEPARTMENT OF TRANSPORTATION DIVISION OF HIGHWAYS STANDARD DRAWINGS	REV 5/72 11/74
APPROVED FOR DISTRIBUTION	SURVEY MONUMENT, FRAME AND COVER, RIGHT OF WAY MARKER	DRAWING NO. C-2101

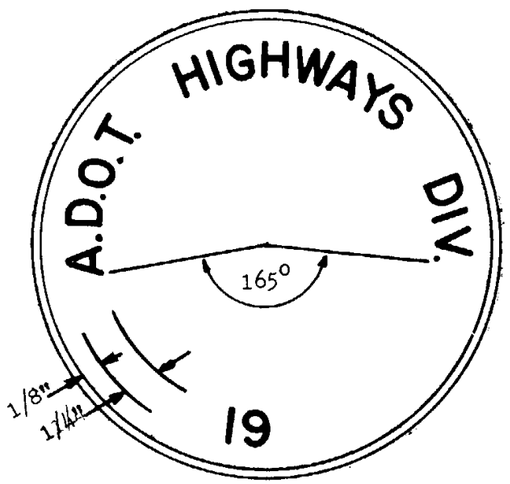

PLAN

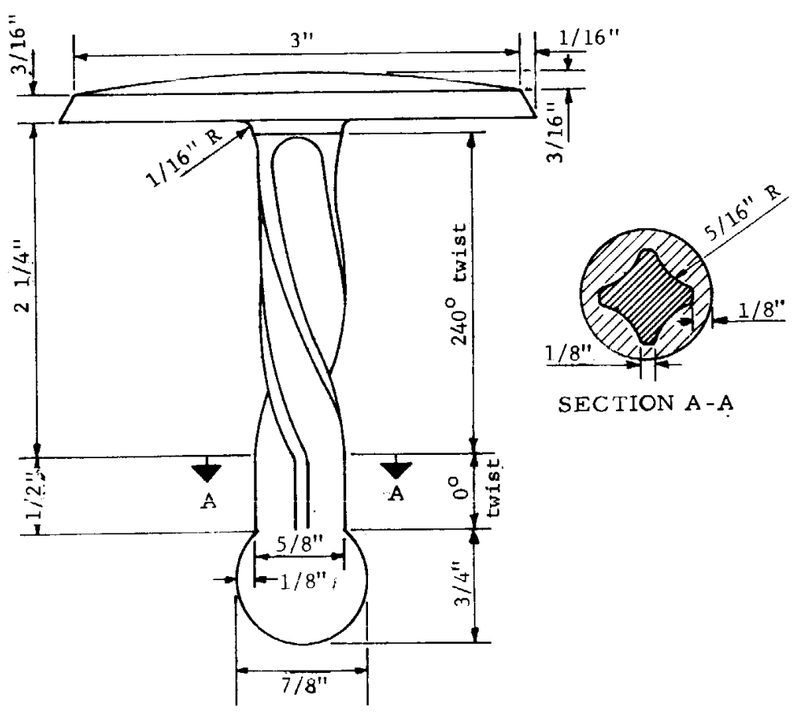

SECTION A-A

ELEVATION

STANDARD MARKER

For use as bench, survey monument and R/W markers

GENERAL NOTES

Standard marker shall be made of brass, bronze or aluminum.

Standard marker will be furnished by the Department.

Bench marks will be established by the Engineer on headwalls, bridge curbs or other permanent structures.

Aluminum marker shall not be used when calcium chloride is used in the concrete.

DESIGN APPROVED	STATE OF ARIZONA DEPARTMENT OF TRANSPORTATION DIVISION OF HIGHWAYS STANDARD DRAWINGS	REV. 9/72 11/74
APPROVED FOR DISTRIBUTION	STANDARD MARKER	DRAWING NO. C-21.02

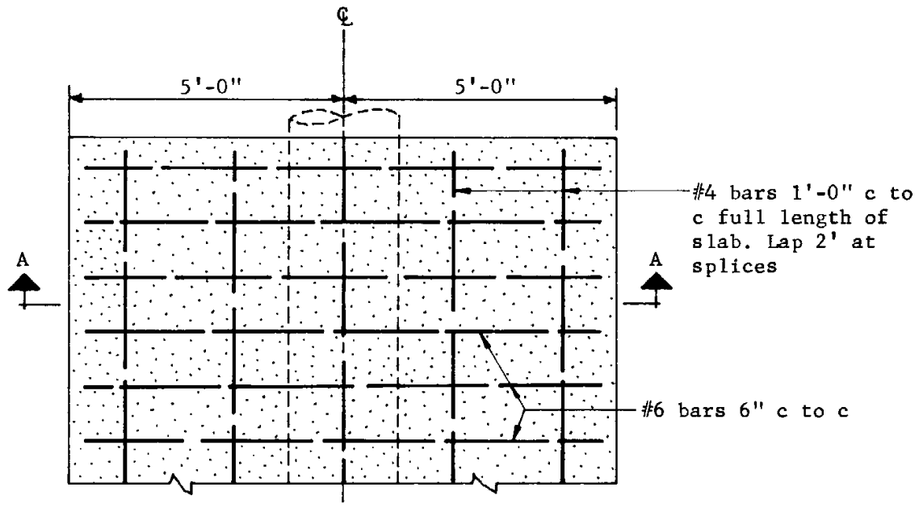

PLAN

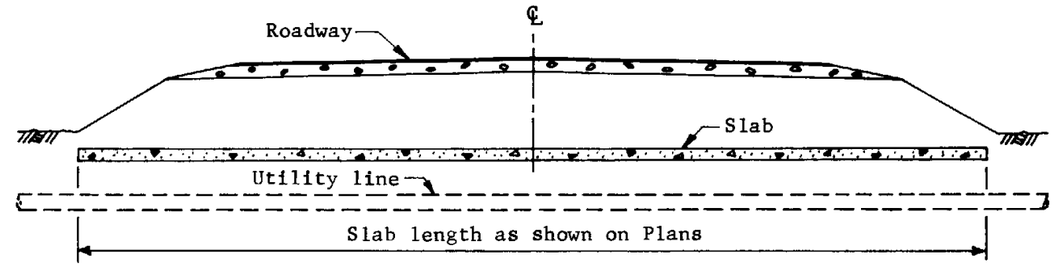

CROSS SECTION

FOR SINGLE INSTALLATION

Quantities per ft. of slab length	
Concrete	Reinforcing Steel
0.31 C.Y.	35.22 lbs.

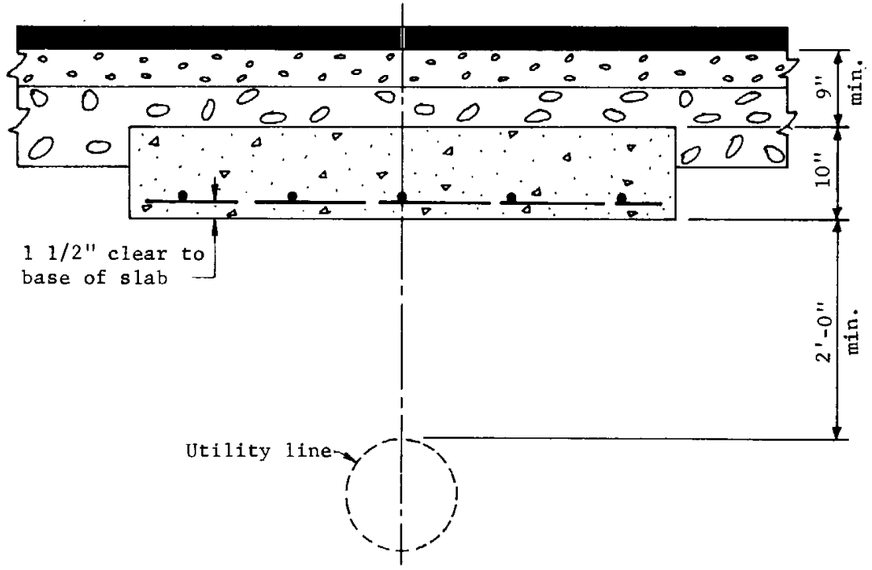

SECTION A-A

GENERAL NOTES
Concrete shall be Class A.

DESIGN APPROVED	STATE OF ARIZONA DEPARTMENT OF TRANSPORTATION DIVISION OF HIGHWAYS STANDARD DRAWINGS	REV
APPROVED FOR DISTRIBUTION	UTILITY LINE, PROTECTIVE CONCRETE SLAB	DRAWING NO. C-22.01