ARIZONA HIGHWAY DEPARTMENT

ROADWAY CONSTRUCTION

STANDARDS

"C"

1971

HIGHWAY PLANS SERVICES

Thomas H. Scheck

TABLE OF CONTENTS

DRAWING NO.	SUBJECT
C- 1.01	Plans Symbols
C- 2.01	Slopes, Interstate and Class A-A Roadways
C- 2.02	Slopes, Class A and B Roadways
C- 2.03	Slopes, Class C and D Roadways
C- 2.04	Parabolic Crown
C- 3.01	Ditches and Dykes
C- 4.01	Concrete Spillway, Inlet & Outlet Embankment Curb
C- 4.02	Spillway Inlet Corrugated Metal Pipe Downdrain, Outlet
C- 4.03	Concrete Spillway Length Table
C- 4.04	Corrugated Metal Pipe Downdrain Length Table
C- 5.01	Curb, Gutter, Sidewalk and Driveway Details
C- 5.02	Curb and Gutter Measurement and Street Intersection Grades
C- 6.01	Turnout and Driveway Layout
C- 6.02	Detour Entrance Design Table
C- 7.01	Transverse Joints for Portland Cement Concrete Pavement
C- 7.02	Longitudinal Joints for Portland Cement Concrete Pavement
C- 7.03	Pavement Cut Replacement
C- 7.04	Jointed Concrete Pavement Anchorage
C- 7.05	Anchorage of Jointed Concrete Pavement at Structures
C- 8.01	Exit Ramp Geometrics
C- 8.02	Entrance Ramp Geometrics Ramp Nose Paving Detail
C- 9.01	Delineator, Usage
C- 9.02	Delineator, Face Plate Details
C- 9.03	Delineator, Placement
C- 9.04	Delineator, Past Mounting Details
C- 9.05	Delineator, Mainline Spacing
C- 9.06	Delineator, Interchange Spacing
C- 9.07	Delineator, Spacing Table
C- 9.08	Delineator, Snow Marker

GENERAL NOTE: The term Plans, as used herein, shall refer to the Roadway Construction Plans.

DRAWING NO.	SUBJECT
C-10.01	Guard Rail Steel, Single Face Details Details A & B
C-10.02	Guard Rail Steel, Double Face & Misc. Details
C-10.03	Gurad Rail Steel, Approach End Treatment Details A & B
C-10.04	Guard Rail Steel, Bridge Approach Installation Details A & B
C-10.05	Guard Rail Steel, Flare to Median Details A & B
C-10.06	Guard Rail Steel, Typical Installation
C-10.08	Concrete Median Barrier Details
C-10.09	Concrete Median Barrier Transition
C-10.10	Median Glare Screen
C-10.11	Chain Link and Cable Barrier Fence
C-11.01	Cattle Guard
C-11.02	CattleGuard, Ranch
C-11.03	Cattle Guard, Railroad
C-11.04	Cattle Guard, Drainage
C-12.01	Line Fence and Gates, Steel Posts
C-12.02	Supplemental Fence Details
C-12.03	Fence, Chain Link
C-12.04	Fence, Industrial Type, Fabricated Wire
C-12.05	Barrier Fence and Barrier Post
C-13.01	Pipe Culvert Installation
C-13.02	Reinforced Concrete Pipe Placement
C-13.03	Fill Heights for Reinforced Concrete Pipe
C-13.04	End Section, Reinforced Concrete Pipe
C-13.05	End Section, Corrugated Metal Pipe & Pipe Arch
C-13.06	Design Fill Heights for Corrugated Metal Pipe
C-13.07	Corrugated Metal Pipe Fill Height Design Data
C-13.08	Corrugated Metal Pipe Arch Design Fill Heights
C-13.09	Corrugated Metal Pipe Arch Fill Height Design Data
C-13.10	Corrugated Metal Pipe Arch Fill Heights
C-13.11	Structural Excavation Payment Limits Pipes, Culverts and Headwalls
C-13.12	Structural Excavation Payment Limits Special Backfill Placement, Bridges & Rat. Walls
C-13.13	Special Backfill Placement Pipes, Culverts and Headwalls
C-13.14	Special Backfill Measurement Limit Pipes, Culverts and Headwalls

DRAWING NO.	SUBJECT
C-14.01	Headwalls-Straight, "L" and "U" Types
C-14.02	Pipe Headwalls, 42" to 84"
C-14.03	Drop Inlet Headwalls
C-15.01	Catch Basin-Type 1, Combination
C-15.02	Catch Basin-Type 2, Combination, Adjustable Curb
C-15.03	Catch Basin-Type 3, Curb Opening Only
C-15.04	Catch Basin-Type 4, Grate Opening Only
C-15.05	Catch Basin-Type 5, Combination Sweeper
C-15.06	Catch Basin Grate, Longitudinal Bars
C-15.07	Catch Basin Grate, Transverse Bars
C-15.08	Catch Basin, Misc. Details
C-15.09	Catch Basin, Median
C-15.10	Catch Basin, Median Dyke, C.B.C. Inlet Details
C-16.01	Irrigation Headwalls
C-16.02	Irrigation Standpipes
C-16.03	Irrigation Valve and Gates
C-17.01	Bank Protection-Types 1, 2, & 3
C-17.02	Bank Protection-Types 4, 5, & 6
C-18.01	Manhole Details
C-18.02	Manhole Frame and Cover Details
C-19.01	Ford, Concrete Walls
C-19.02	Fords
C-20.01	Railroad Crossing Signs
C-21.01	Survey Monument and Right of Way Markers
C-21.02	Standard Markers
C-22.01	Slab over Utility Line

INDEX

A.H.D. Roadway Construction Standards

STANDARD NO.	SUBJECT:	LAST REVISION DATE:	CURRENT REVISION DATE:
C-13.14	Backfill Special, Measurement, Culverts & Pipe Lines		5/72
C-13.13	Backfill, Special Placement, Culverts & Pipe Lines	5/72	2/73
C-17.01	Bank Protection, Rail and Wire, Types 1, 2 & 3		3/71
C-17.02	Bank Protection, Rail and Wire, Types 4, 5 & 6	5/72	2/73
C-10.08	Barrier, Concrete, Median		5/72
C-10.09	Barrier, Concrete, Median, Transition Details		
C-12.05	Barrier Fence, Cable Only		5/72
C-10.11	Barrier Fence, Chain Link & Cable		3/71
C-12.05	Barrier Post		5/72
C-13.11	Box Culvert, Struct. Excav. Payment Limits	3/71	5/72
C-15.08	Catch Basin, Construction Drain		5/72
C-15.08	Catch Basin, Depressed Apron, Off Roadway		5/72
C-15.08	Catch Basin, Depressed Apron, P.C.C., Gutter Location		5/72
C-15.06	Catch Basin, Grate and Frame, Longitudinal Bars		12/68
C-15.07	Catch Basin, Grate and Frame, Transverse Bars		12/68
C-15.09	Catch Basin, Median	11/68	10/70
C-15.10	Catch Basin, Median Dyke, C.B.C. Inlet Details	10/70	5/72
C-15.01	Catch Basin-Type 1, Combination	12/68	3/71
C-15.02	Catch Basin-Type 2, Combination, Adjustable Curb	3/71	5/72
C-15.03	Catch Basin-Type 3, Curb Opening Only	12/68	3/71
C-15.04	Catch Basin-Type 4, Grate Opening Only		3/71
C-15.05	Catch Basin-Type 5, Combination Sweeper	9/70	3/71
C-11.01	Cattle Guard	7/72	2/73
C-11.04	Cattle Guard, Drainage		12/68
C-11.03	Cattle Guard, Railroad		
C-11.02	Cattle Guard, Ranch and Sideroad	7/72	2/73
C-13.05	C.M.P. and Pipe Arch End Section		4/70
C-13.10	C.M.P. and Pipe Arch Invert Pavement		11/68
C-13.08	C.M.P. Arch, Fill Heights		1/71
C-13.09	C.M.P. Arch, Fill Heights Design Data		12/68
C- 4.02	C.M.P. Downdrain	11/68	5/72
C- 4.04	C.M.P. Downdrain Length Table		3/71
C-13.06	C.M.P., Fill Heights	11/71	2/73
C-13.07	C.M.P., Fill Heights Design Data		12/68
C-13.01	C.M.P., Perforated, Installation	12/68	3/71
C- 2.04	Crown, Parabolic		12/68
C-13.11	Culvert, Box, Struct. Excav. Payment Limits	3/71	5/72
C-13.05	Culvert, C.M.P. and Pipe Arch End Section		4/70
C-13.10	Culvert, C.M.P. and Pipe Arch Invert Pavement		11/68
C-13.10	Culvert, C.M.P. Arch, Fill Heights		11/68
C-13.06	Culvert, C.M.P., Fill Heights	11/71	2/73
C-13.09	Culvert, C.M.P., Fill Heights Design Data		12/68
C-13.01	Culvert, Pipe, Installation	12/68	3/71
C-13.11	Culvert, Pipe, Struct. Excav. Payment Limits	3/71	5/72

STANDARD NO.	SUBJECT	LAST REVISION DATE:	CURRENT REVISION DATE:
C-13.04	Culvert, R.C.P., End Section		
C-13.03	Culvert, R.C.P., Fill Heights		
C-13.02	Culvert, R.C.P., Placement	5/72	2/73
C- 5.01	Curb, Concrete		
C- 5.01	Curb, Depressed, Driveway Detail		
C- 4.01	Curb, Embankment, Concrete	2/70	5/72
C- 5.02	Curb, Measurement		
C-9.02.1&.2	Delineators, Face Plate Details		7/72
C-9.06	Delineators, Interchange Spacing		7/72
C- 9.05	Delineators, Main Line Spacing		7/72
C- 9.03	Delineators, Placement		7/72
C- 9.04	Delineators, Past and Mounting Details		7/72
C- 9.08	Delineators, Snow Markers		7/72
C- 9.07	Delineators, Spacing Table		7/72
C- 9.01	Delineators, Usage		7/72
C- 6.02	Detour, Entrance Design Table	12/68	5/72
C- 3.01	Ditches		5/72
C- 2.01	Ditches, Paved, Class A-A Roadway	2/73	3/73
C- 2.02	Ditches, Paved, Class A & B Roadways	2/73	3/73
C- 2.03	Ditches, Paved, Class C & D Roadways	2/73	3/73
C- 4.02	Downdrain, C.M.P.	11/68	5/72
C- 4.04	Downdrain, C.M.P. Length Table		3/71
C- 5.01	Driveway, Details		
C- 5.01	Driveway, Layout		
C- 3.01	Dykes		5/72
C- 4.01	Embankment Curb, Concrete	2/70	5/72
C-13.02	Encasement, Culvert	5/72	2/73
C-13.05	End Sections, C.M.P. And Pipe Arch		4/70
C-13.04	End Sections, Reinforced Concrete Pipe		
C-12.05	Fence, Barrier, Cable Only		5/72
C-10.11	Fence, Barrier, Chain Link and Cable		3/71
C-12.03	Fence, Chain Link	3/71	5/72
C-12.02	Fence, Culvert Wing	12/68	5/72
C-12.04	Fence, Industrial, Chain Link Pipe Constr.	3/71	5/72
C-12.04	Fence, Industrial, Chain Link Rolled Shape Constr.	3/71	5/72
C-12.02	Fence, Game	12/68	5/72
C-12.01	Fence, Line	12/68	5/72
C-12.02	Fence, Stock	12/68	5/72
C-19.02	Fords	12/68	
C-19.01	Ford, Concrete Cutoff Walls	12/68	3/71
C-12.04	Gate, Driveway, Chain Link	3/71	5/72
C-16.03	Gate, Irrigation		
C-12.01	Gate, Line Fence, Barbed Wire	12/68	5/72
C-12.01	Gate, Line Fence, Rigid	12/68	5/72

INDEX (CONTINUED)

STANDARD NO.	SUBJECT:	LAST REVISION DATE	CURRENT REVISION DATE
C-12.02	Gate, Removal Detail	12/68	5/72
C-12.03	Gate, Walk, Chain Link	3/71	5/72
C-10.10	Glare Screen, Median	5/72	2/73
C- 5.02	Grades, Street Intersection		
C-10.03	Guard Rail, Approach End Treatment, Pavement Widening	5/72	4/73
C-10.04	Guard Rail, Bridge Approach Alignment, Pavement Widening	2/73	4/73
C-10.05	Guard Rail, Flare to Median, Pavement Widening	2/73	4/73
C-10.02	Guard Rail, Installation on Structures	5/72	2/73
C-10.02	Guard Rail, Median Barrier Detail	5/72	2/73
C-10.02	Guard Rail, Pier Attachment Detail	5/72	2/73
C-10.01	Guard Rail, Single Face Detail, Pavement Widening	2/73	4/73
C-10.02	Guard Rail, Special Terminal Section Detail	5/72	2/73
C-10.06	Guard Rail, Typical Installations	12/68	5/72
C- 5.01	Gutter, Concrete		
C- 5.02	Gutter, Measurement		
C- 2.01	Gutter, Paved Cut Ditch, Class A-A Roadways	2/73	3/73
C- 2.02	Gutter, Paved Cut Ditch, Class A & B Roadways	2/73	3/73
C- 2.03	Gutter, Paved Cut Ditch, Class C & D Roadways	2/73	3/73
C- 5.01	Gutter, Valley		
C-14.03	Headwall, Drop Inlet	11/68	3/71
C-16.01	Headwall, Irrigation		
C-14.01	Headwall, Straight, "L" and "U" Types		5/72
C-14.02	Headwall, Wing Type	1/71	5/72
C- 4.01	Inlet, Concrete Spillways	2/70	5/72
C- 5.02	Intersection Grades		
C-13.10	Invert Pavement, C.M.P. and Pipe Arch		11/68
C-16.03	Irrigation Gates		
C-16.03	Irrigation Valves		
C- 7.01	Joint, Bridge Approach Slab		
C- 7.02	Joint, P.C.C. Pavement, Longitudinal		
C- 7.01	Joint, P.C.C. Pavement, Transverse		
C-13.02	Joint, R.C.P.	5/72	2/73
C-18.01	Manhole, Detail		
C-18.02	Manhole, Frame and Cover Details		
C-21.01	Marker, Right of Way	2/72	5/72
C-10.08	Median Barrier, Concrete		5/72
C-21.01	Monument, Survey	2/72	5/72
C- 7.03	Pavement, Cut Replacement		5/72
C-13.10	Pavement, Invert, C.M.P. and Pipe Arch		11/68
C- 8.02	Pavement, Nose, Ramp Terminal	5/72	9/72
C-13.11	Payment Limits, Structural Excavation	3/71	5/72
C-13.01	Perforated C.M.P. Installation	12/68	3/71

STANDARD NO:	SUBJECT:	LAST REVISION DATE:	CURRENT REVISION DATE:
C-13.01	Pipe Culvert, Installation	12/68	3/71
C-13.11	Pipe Line, Structural Excav. Payment Limits	3/71	5/72
C-12.05	Post, Barrier		5/72
C-20.01	Railroad Crossing Signs		5/72
C- 8.02	Ramp, Entrance Typical Terminal Detail	5/72	9/72
C- 8.01	Ramp, Exit Typical Terminal Detail		5/72
C-13.04	Reinforced Concrete Pipe End Section		
C-13.03	Reinforced Concrete Pipe Fill Heights		
C-13.02	Reinforced Concrete Pipe Placement	5/72	2/73
C-21.01	Right of Way Marker	2/72	5/72
C- 5.01	Sidewalk, Concrete		
C-20.01	Signs, Railroad Crossing		5/72
C- 2.02	Slopes, Class A & B Roadway	2/73	3/73
C- 2.03	Slopes, Class C & D Roadway	2/73	3/73
C- 2.01	Slopes, Class A-A and Interstate Roadways	2/73	3/73
C-13.13	Special Backfill, Placement	5/72	2/73
C-13.14	Special Backfill Measurement		5/72
C- 4.01	Spillway, Concrete	2/70	5/72
C- 4.03	Spillway, Concrete Length Table	3/71	5/72
C- 4.02	Spillway, C.M.P.	11/68	5/72
C- 4.04	Spillway, C.M.P. Length Table		3/71
C-21.02	Standard Marker		9/72
C-16.02	Standpipe, Irrigation		
C-13.12	Structural Excavation Payment Limits		
C-21.01	Survey Monument	2/72	5/72
C- 1.01	Symbols, Plans	1/71	2/73
C- 6.01	Turnouts		
C-22.01	Utility Line, Underground, Concrete Slab Protection		
C- 5.01	Valley Gutter		

B. P. R. REGION	STATE	PROJ. NO.	SHEET NO.	TOTAL SHEETS	AS BUILT
7	ARIZ.				
7½"/10	5"/10	1 5"/10	5"/10	5"/10	1"

1"/4 · 3"/10

STATE OR NATIONAL LINE
COUNTY LINE
TOWNSHIP OR RANGE LINE
SECTION LINE
QUARTER SECTION LINE
FOREST OR RESERVATION LINE — Shading on inside of line
HIGHWAY R/W LINE
CONTROL OF ACCESS LINE — BLU ZIP NO. 333 & CHART PAK 256 TAA 1/8" WIDE — Shading on outside of line
UNFENCED PROPERTY — Blu-Zip No. 113
CITY LIMITS
SECTION AND QUARTER CORNERS
COMBINED CURB & GUTTER — Depressed for driveway — 20' D.C. — Existing
SIDE ROAD TURNOUT (1) (2) — New — Existing
GROUND LINE
EXISTING ROAD (2) — Width & type
OBLITERATE PAVEMENT (2) — Blu-Zip No. 438
NEW CONCRETE PAVEMENT (1) — Blu-Zip No. 340
NEW BIT. MIX. PAVEMENT (1) — Blu-Zip No. 309
EXISTING PAVEMENT (2) — Blu-Zip No. 310
BIT. PAVEMENT (SECTION)
P.C. CONCRETE (SECTION)
AGGREGATE BASE
SELECT MATERIAL
SUBGRADE SEAL

TREES AND SHRUBS
TRAFFIC SIGN
ADVERTISING SIGN — Large — Small
GUARD RAIL — New — Existing
BARRIER POST - HAZARD MARKER
STANDARD BARBED WIRE FENCE — Gate
WOOD FENCE
CHAIN LINK & STOCK FENCE
CATTLE GUARD (1) (2) — New — Existing
CHANNEL OR DITCH
DYKE OR LEVEE
BANK PROTECTION
RETAINING WALL
PIPE CULVERTS (1) (2) — New — Existing
REINF. CONC. BOX CULV. (1) (2) — New — Existing
C.M.P. DOWNDRAIN — 1-Way — 2-Way
CONCRETE SPILLWAY — 1-Way — 2-Way
DROP INLET OR CATCH BASIN
MANHOLE — New — Exist. — To be Adjusted — Reset
FIRE HYDRANT — New — Exist.
VALVE (WATER OR GAS) — W — G
METER BOX
TELEPHONE BOOTH — T
STREET LIGHT — On. Ext. Arm
DOWN GUY AND ANCHOR
TELEPHONE OR TELEGRAPH LINE
POWER LINE OR JOINT LINE
WATER LINE — W — 2"
GAS LINE — G — 3"
IRRIGATION LINE — IRR — 12"
STORM DRAIN — SD — 30"
SANITARY SEWER — S — 8"

RAILROAD CROSSING SIGNS — Advance Warning — X Buck — Flashing Light
RAILROAD TRACK
WELL OR PUMP HOUSE
SURVEY MONUMENT (1) (2) — New — Exist.
R/W MARKER (1) (2) — New — Exist.
MILE POST — New — Exist.
ANGLE POINT AND ANGLE (1) (2)

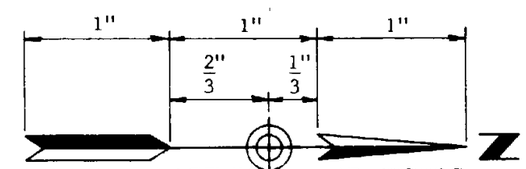

USE ON LARGE SCALE DRAWINGS

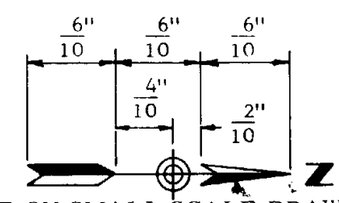

USE ON SMALL SCALE DRAWINGS

(1) New: —— No. 1 Rapidograph line
(2) Existing: ---- No. 00 Rapidograph line
(Back of plan sheet)

ARIZONA HIGHWAY DEPARTMENT
CONSTRUCTION SECTION

Rev 12-5-68 1-12-71 2/73

PLANS SYMBOLS

Drawn	R. A. F.	Drawing No.
Traced		C-1.01
Checked	J.P.O.	
Approved Asst. State Eng Const.	F. F. Landlin	

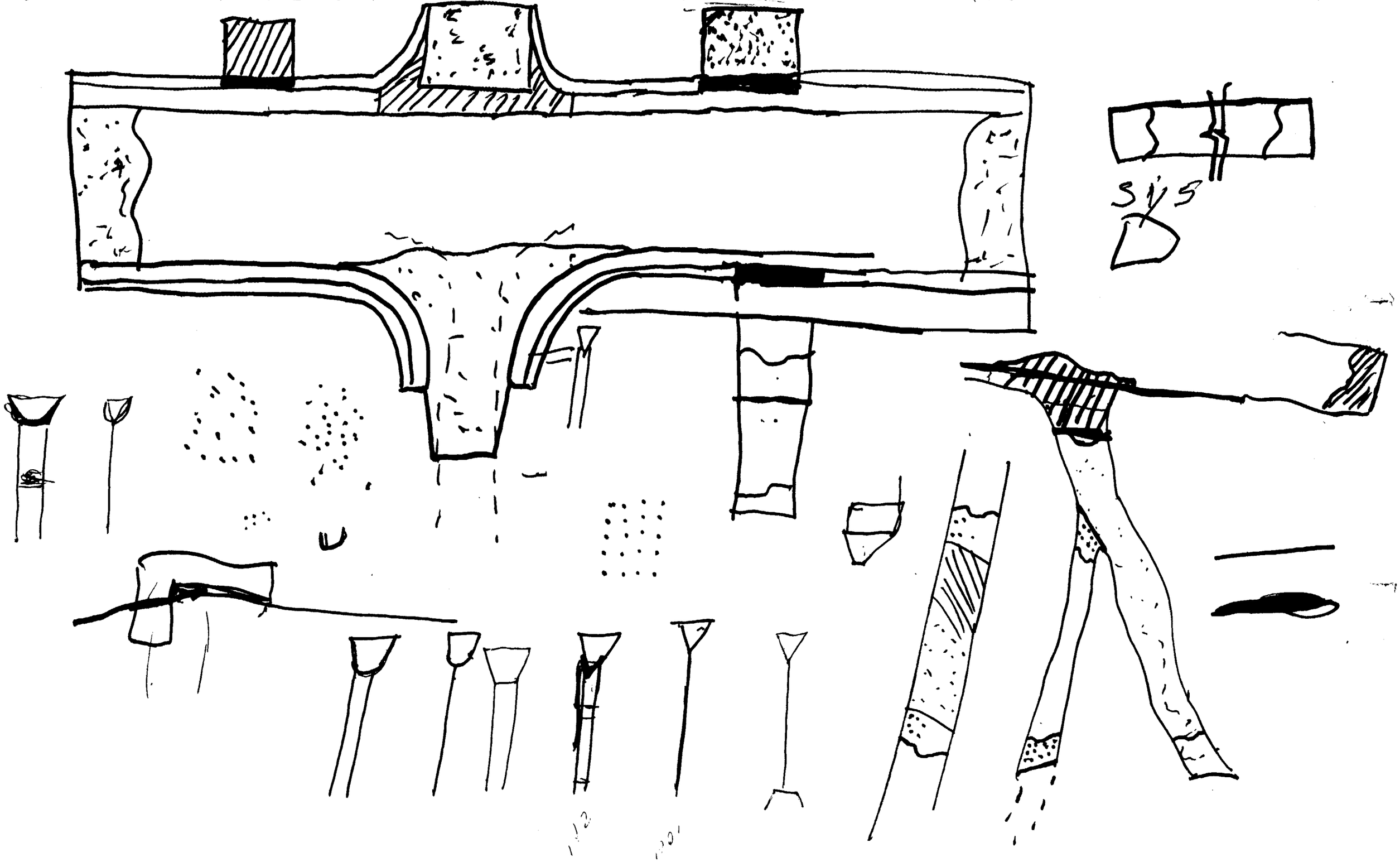
3 1/5

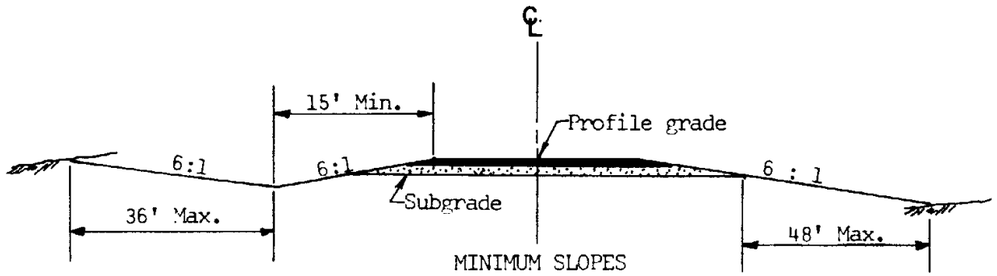

MINIMUM SLOPES

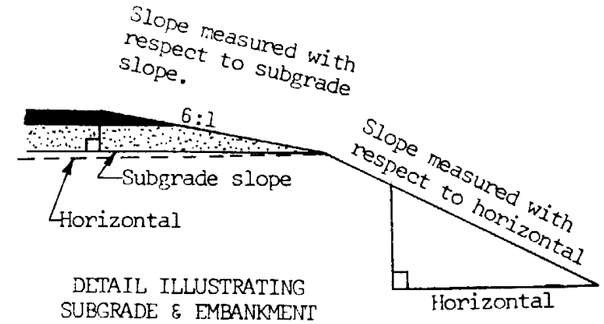

DETAIL ILLUSTRATING SUBGRADE & EMBANKMENT SLOPE CONTROL

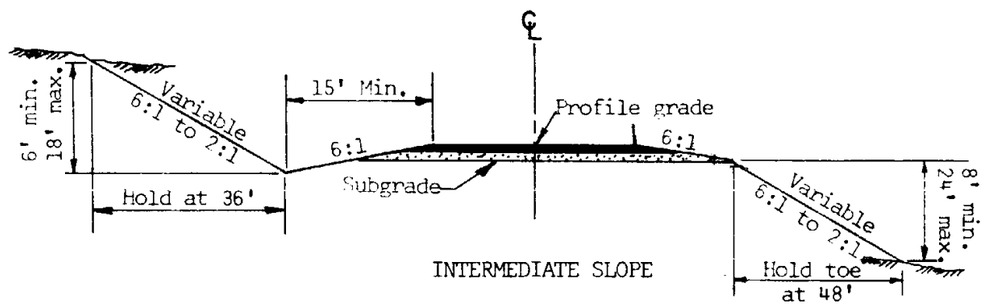

INTERMEDIATE SLOPE

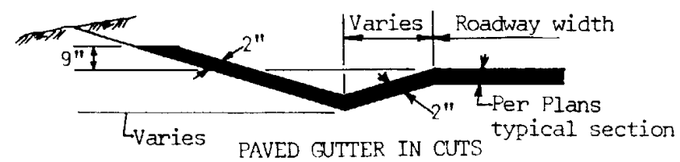

PAVED GUTTER IN CUTS

GENERAL NOTES

The desirable maximum embankment slope rate shall be 4:1 within interchange and grade seperation areas.

See Plans for details of; roadway width cut ditch, type and thickness of roadway surfacing, and superelevation.

Standard cut and embankment slopes as shown on this sheet may be superseded by special slopes where shown on plans.

For cuts up to 6' use 5' semitangents for slope rounding. For each additional foot of cut add 1' to semitangent to 11' maximum.

Should median slopes intersect see design supplement sheet.

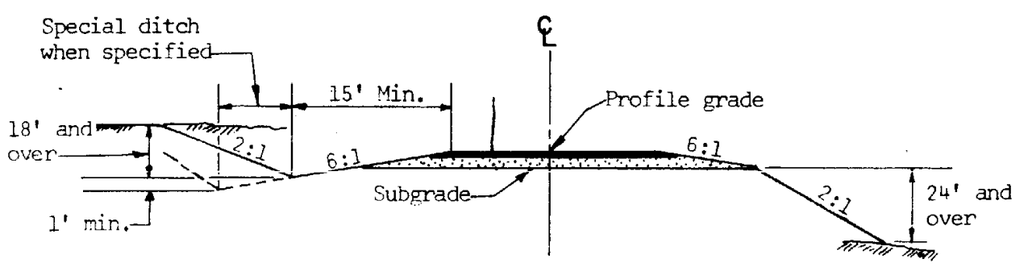

MAXIMUM SLOPES

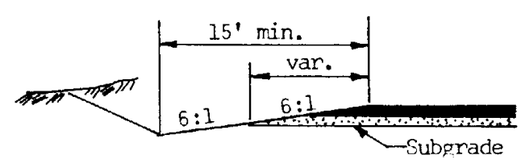

MINIMUM DITCH CONDITION

TYPICAL SECTIONS

ARIZONA HIGHWAY DEPARTMENT
CONSTRUCTION SECTION

SLOPES INTERSTATE AND CLASS A-A ROADWAYS

Drawn	J.A.W.	Drawing No.
Traced		C-2.01
Checked	R.W.	
Approved Asst. State Eng Const.		

Rev 2/73

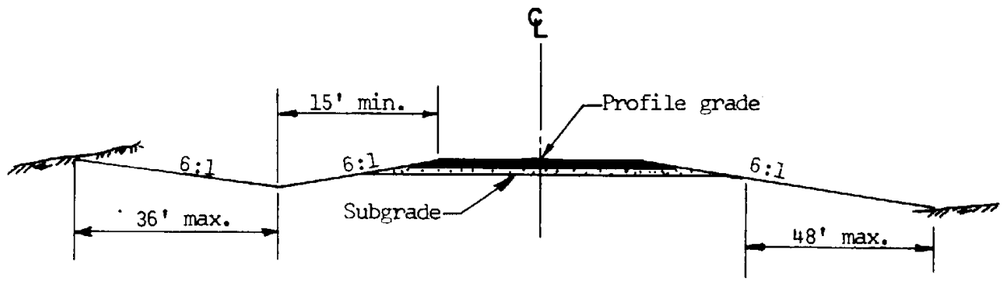

MINIMUM SLOPES

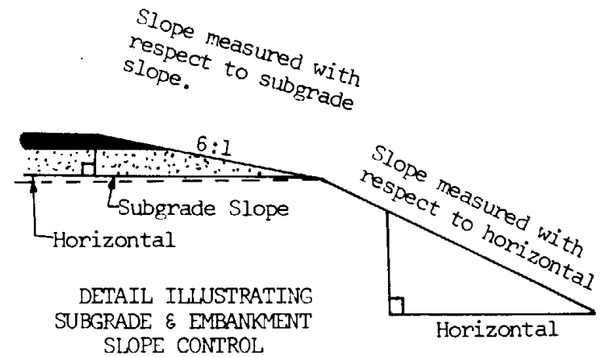

DETAIL ILLUSTRATING SUBGRADE & EMBANKMENT SLOPE CONTROL

NOTE: Std. slope rounding not shown see Genral Notes.

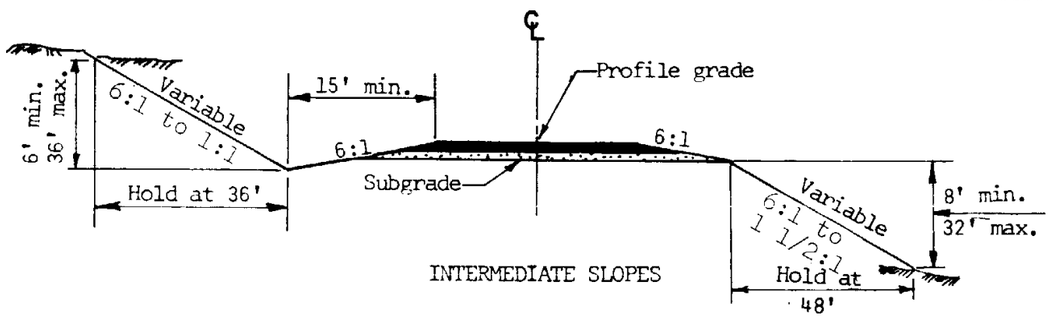

INTERMEDIATE SLOPES

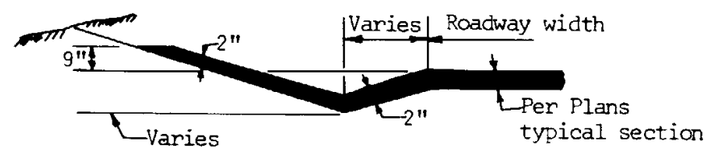

PAVED GUTTER IN CUTS

GENERAL NOTES

See Plans for details of; roadway width, cut ditch, type and thickness of roadway surfacing, superelevation, and curve widening.

Standard cut and embankment slopes as shown on this sheet may be superseded by special slopes where shown on Plans.

For cuts up to 6' use 5' semitangents for slope rounding. For each additional foot of cut add 1' to semitangent to 11' maximum.

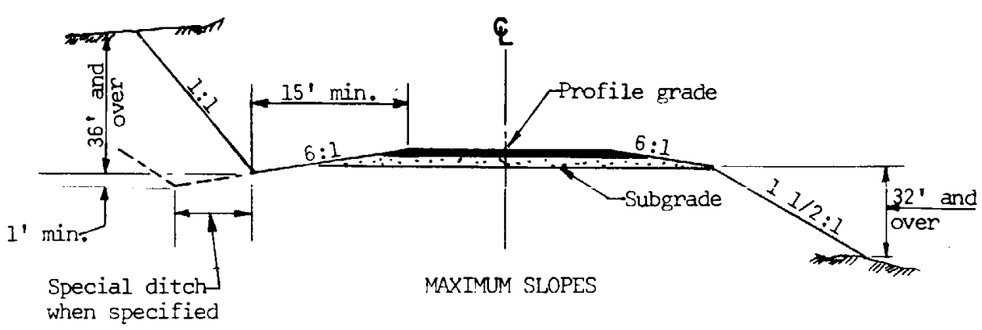

MAXIMUM SLOPES

TYPICAL SECTIONS

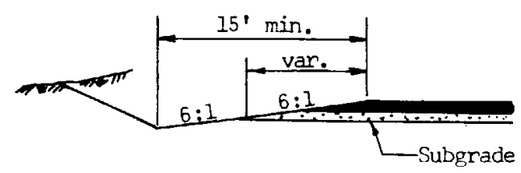

MINIMUM DITCH CONDITION

ARIZONA HIGHWAY DEPARTMENT
CONSTRUCTION SECTION

Rev 2/73 3/73

SLOPES
CLASS A & B ROADWAYS

Drawn	J.A.W.	Drawing No.
Traced		C-2.02
Checked	R.W.	
Approved Asst. State Eng Const.		

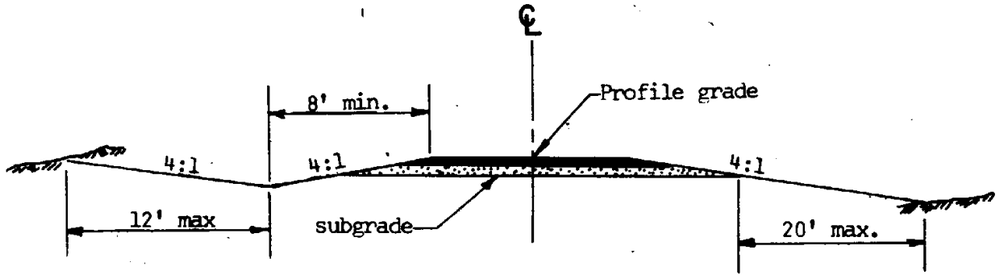

MINIMUM SLOPES

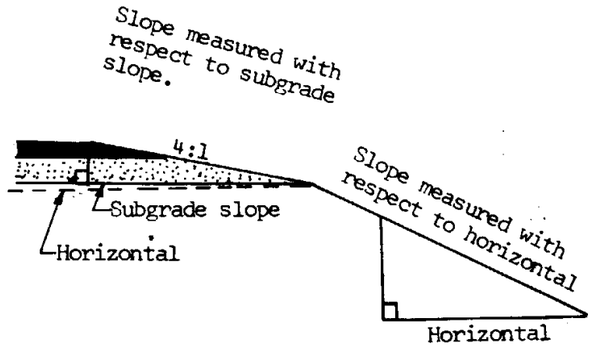

DETAIL ILLUSTRATING SUBGRADE & EMBANKMENT SLOPE CONTROL

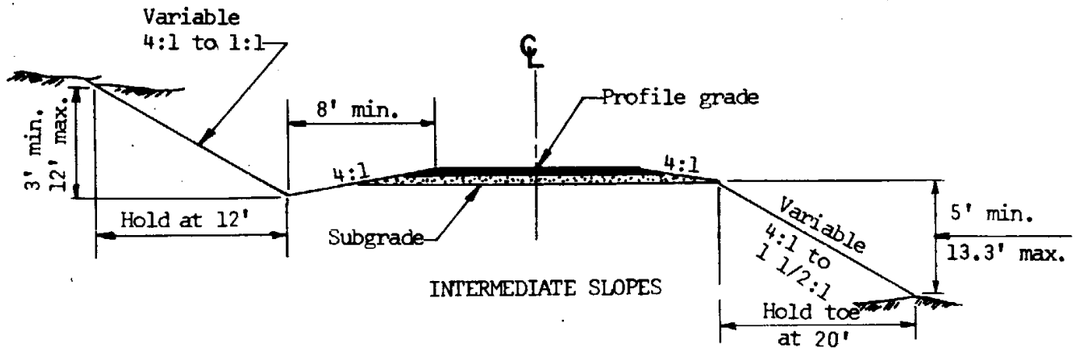

INTERMEDIATE SLOPES

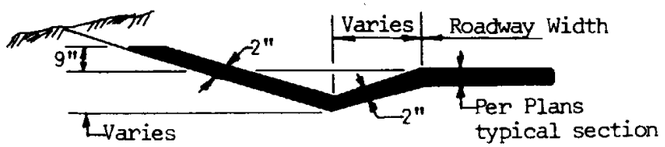

PAVED GUTTER IN CUTS

GENERAL NOTES

See Plans for details of roadway width, cut ditch, type and thickness of roadway surfacing, seuperelevation, and curve widening.

Standard cut and embankment slopes as shown on this sheet may be superseded by special slopes where shown on Plans.

For cuts up to 6' use 5' semitangent for slope rounding. For each additional foot of cut add 1' to semitangent to 11' maximum.

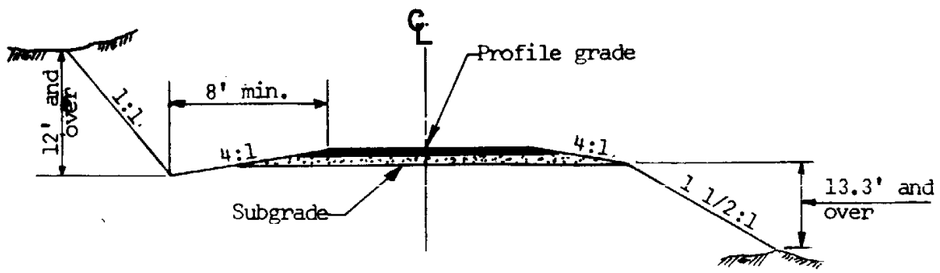

MAXIMUM SLOPES

TYPICAL SECTIONS

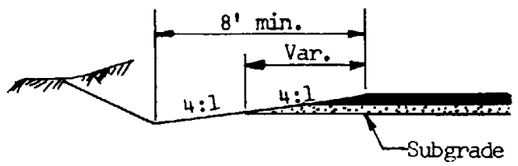

MINIMUM DITCH CONDITION

ARIZONA HIGHWAY DEPARTMENT
CONSTRUCTION SECTION

Rev 2/73

SLOPES
CLASS C & D ROADWAYS

Drawn	J.A.W.	Drawing No.
Traced		C-2.03
Checked	R.W.	
Approved Asst. State Eng Const.		

CUMULATIVE PERCENT OF CROWN "C" FOR EACH FOOT RIGHT OR LEFT OF ℄

W = FULL WIDTH OF ROADWAY - FEET

X →	2'	4'	6'	8'	10'	12'	14'	16'	18'	20'	22'	24'	26'	28'	30'	32'	34'	36'	38'	40'	42'	44'
90	0.20	0.79	1.78	3.16	4.94	7.11	9.68	12.64	16.00	19.75	23.90	28.44	33.38	38.72	44.44	50.57	57.09	64.00	71.31	79.01	87.11	95.61
88	0.21	0.83	1.86	3.31	5.17	7.44	10.12	13.22	16.74	20.66	25.00	29.75	34.92	40.50	46.49	52.89	59.71	66.94	74.59	82.64	91.12	C
86	0.22	0.87	1.95	3.46	5.41	7.79	10.60	13.85	17.52	21.63	26.18	31.15	36.56	42.40	48.67	55.38	62.52	70.09	78.10	86.53	95.40	
84	0.23	0.91	2.04	3.63	5.67	8.16	11.11	14.51	18.37	22.68	27.44	32.65	38.32	44.44	51.02	58.05	65.53	73.47	81.86	90.70	C	
82	0.24	0.95	2.14	3.81	5.95	8.57	11.66	15.23	19.27	23.80	28.79	34.27	40.21	46.64	53.54	60.92	68.77	77.10	85.90	95.18		
80	0.25	1.00	2.25	4.00	6.25	9.00	12.25	16.00	20.25	25.00	30.25	36.00	42.25	49.00	56.25	64.00	72.25	81.00	90.25	C		
78	0.26	1.05	2.37	4.20	6.57	9.47	12.89	16.83	21.30	26.30	31.82	37.87	44.44	51.54	59.17	67.32	76.00	85.21	94.94			
76	0.28	1.11	2.49	4.43	6.93	9.97	13.57	17.73	22.44	27.70	33.52	39.89	46.81	54.29	62.33	70.91	80.06	89.75	C			
74	0.29	1.17	2.63	4.67	7.30	10.52	14.32	18.70	23.67	29.22	35.35	42.07	49.38	57.27	65.74	74.80	84.44	94.67				
72	0.31	1.23	2.78	4.94	7.72	11.11	15.12	19.75	25.00	30.86	37.35	44.44	52.16	60.49	69.44	79.01	89.20	C				
70	0.33	1.31	2.94	5.22	8.16	11.76	16.00	20.90	26.45	32.65	39.51	47.02	55.18	64.00	73.47	83.59	94.37					
68	0.35	1.38	3.11	5.54	8.65	12.46	16.95	22.15	28.03	34.60	41.87	49.83	58.48	67.82	77.85	88.58	C					
66	0.37	1.47	3.30	5.87	9.18	13.21	17.99	23.49	29.73	36.71	44.41	52.86	62.03	71.94	82.59	93.97						
64	0.39	1.56	3.52	6.25	9.77	14.06	19.14	25.00	31.64	39.06	47.27	56.25	66.02	76.56	87.89	C						
62	0.42	1.66	3.75	6.66	10.41	14.98	20.40	26.64	33.71	41.62	50.36	59.94	70.34	81.58	93.65							
60	0.44	1.78	4.00	7.11	11.11	16.00	21.78	28.44	36.00	44.44	53.78	64.00	75.11	87.11	C							
58	0.48	1.90	4.28	7.61	11.89	17.12	23.31	30.44	38.52	47.56	57.55	68.49	80.38	93.22								
56	0.51	2.04	4.59	8.16	12.76	18.37	25.00	32.65	41.33	51.02	61.73	73.47	86.22	C								
54	0.55	2.19	4.94	8.78	13.72	19.75	26.89	35.12	44.44	54.87	66.39	79.01	92.73									
52	0.59	2.37	5.33	9.47	14.79	21.30	28.99	37.87	47.93	59.17	71.60	85.21	C									
50	0.64	2.56	5.76	10.24	16.00	23.04	31.36	40.96	51.84	64.00	77.44	92.16										
48	0.69	2.78	6.25	11.11	17.36	25.00	34.03	44.44	56.25	69.44	84.03	C										
46	0.76	3.02	6.81	12.10	18.90	27.22	37.05	48.39	61.25	75.61	91.49											
44	0.83	3.31	7.44	13.22	20.66	29.75	40.50	52.89	66.94	82.64	C											
42	0.91	3.63	8.16	14.51	22.68	32.65	44.44	58.05	73.47	90.70												
40	1.00	4.00	9.00	16.00	25.00	36.00	49.00	64.00	81.00	C												
38	1.11	4.43	9.97	17.73	27.70	39.89	54.29	70.91	89.75													
36	1.23	4.94	11.11	19.75	30.86	44.44	60.49	79.01	C													
34	1.38	5.50	12.46	22.15	34.60	49.83	67.82	88.58														
32	1.56	6.25	14.06	25.00	39.06	56.25	76.56	C														
30	1.78	7.11	16.00	28.44	44.44	64.00	87.11															
28	2.04	8.16	18.37	32.65	51.02	73.47	C															
26	2.37	9.47	21.30	37.87	59.17	85.21																
24	2.78	11.11	25.00	44.44	69.44	C																
22	3.31	13.22	29.75	52.89	82.64																	
20	4.00	16.00	36.00	64.00	C																	
18	4.94	19.75	44.44	79.01																		
16	6.25	25.00	56.25	C																		
14	8.16	32.65	73.47																			
12	11.11	44.44	C																			

FORMULA

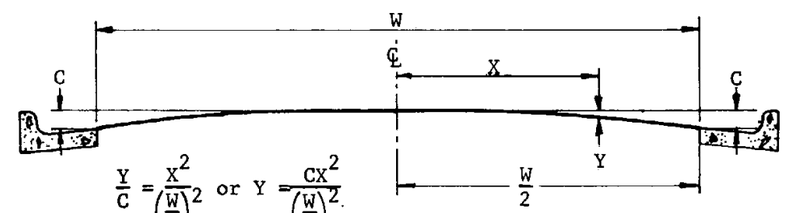

$$\frac{Y}{C} = \frac{X^2}{\left(\frac{W}{2}\right)^2} \text{ or } Y = \frac{CX^2}{\left(\frac{W}{2}\right)^2}$$

USE OF TABLE

Example:

Assume W = 40 ft. and C = 0.45 ft.
Find Y for X = 8 ft.

Table shows Y = 16.00% of C,
or 0.16 X 0.45' = 0.072 ft.

ARIZONA HIGHWAY DEPARTMENT
PLANS DIVISION

Rev. 12-5-68

PARABOLIC CROWN FORMULA AND TABLE

Drawn	L.McD. 6-41	Drawing No.
Traced	S.L.T. 7-67	
Checked	J.P.O. JPO 5-68	C-2.04
Approved Engr. Plans	G Heidecker 5-68	

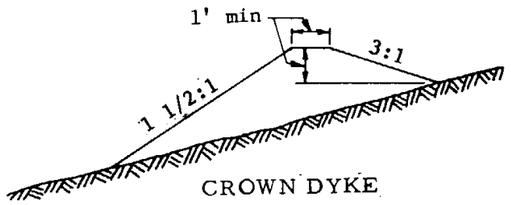

CROWN DYKE

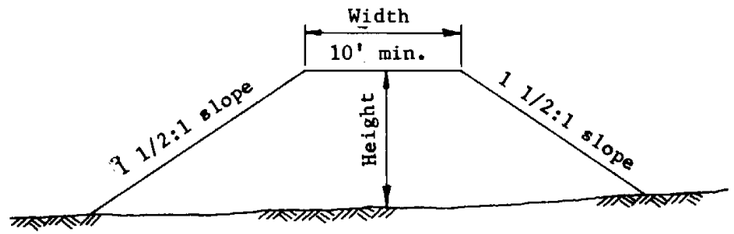

TYPE A DYKE

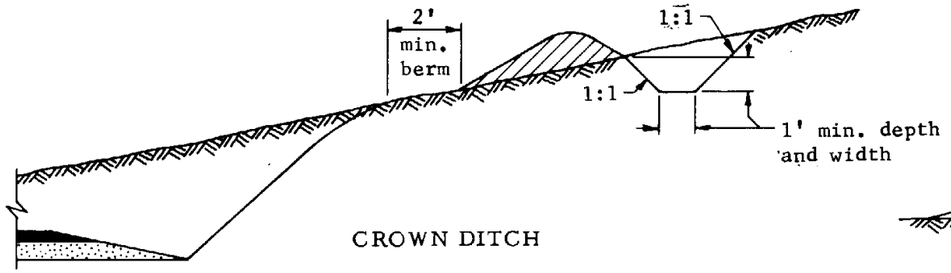

CROWN DITCH

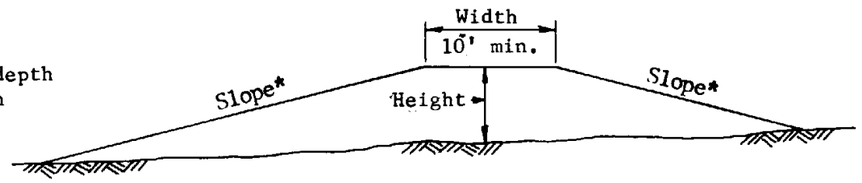

TYPE B MEDIAN DYKE

*Side Slope as indicated on plans

GENERAL NOTES

Bituminous or soil cement protection shall be applied to dyke surfaces as called for on Plans.

Dimensions of ditches and dykes, as shown on Plans, are width, depth or height and length.

Ditches shall be constructed with a minimum grade to prevent excessive erosion Ditch outlets shall be provided per plans.

Ditch sections shown may be varied by the Engineer.

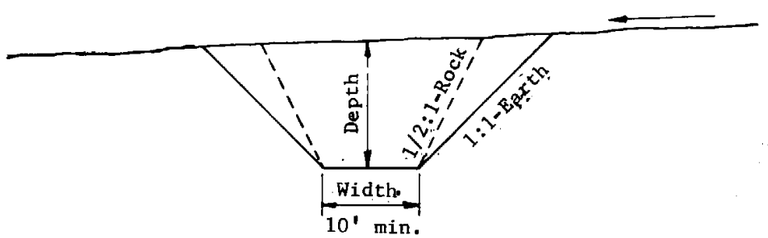

CHANNEL

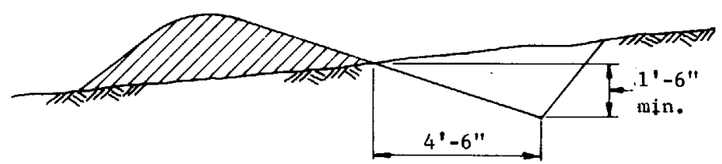

GRADER DITCH

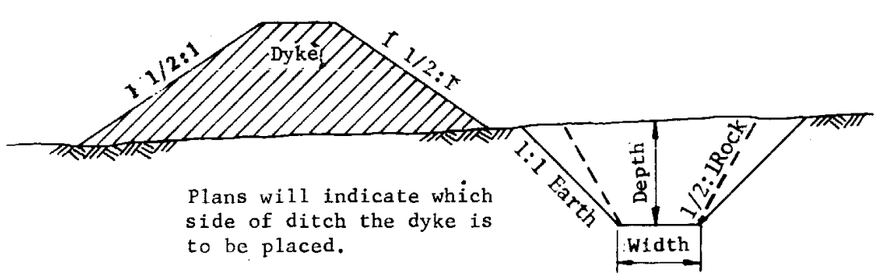

Plans will indicate which side of ditch the dyke is to be placed.

DITCH AND DYKE

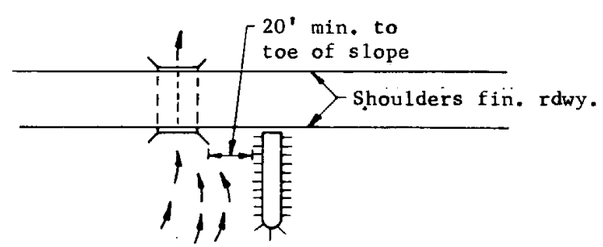

TYPICAL DYKE INSTALLATION AT STRUCTURE

Place dykes at structures to create a water cushion.

ARIZONA HIGHWAY DEPARTMENT
CONSTRUCTION SECTION

DITCHES AND DYKES

Drawn	G.H.	Drawing No.
Traced	J.A.W.	C-3.01
Checked	R.W.	
Approved Asst. State Eng Const.	F.F. Landin	

Rev 5/72

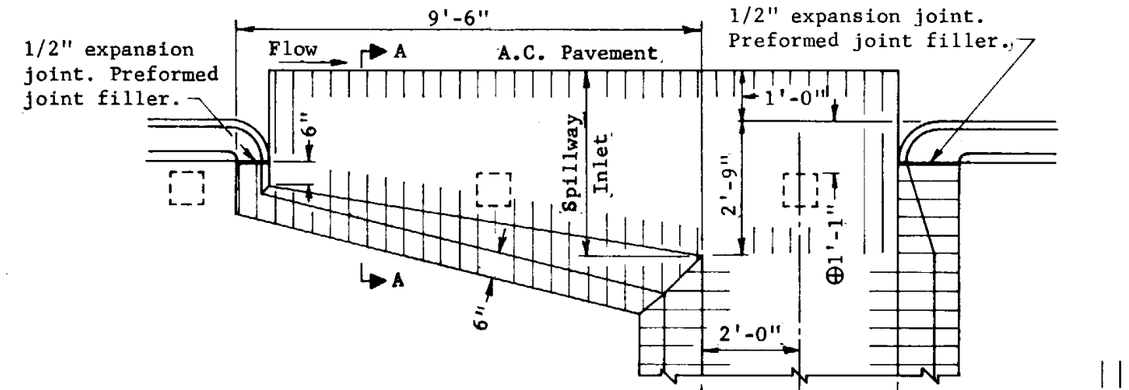

SINGLE INLET

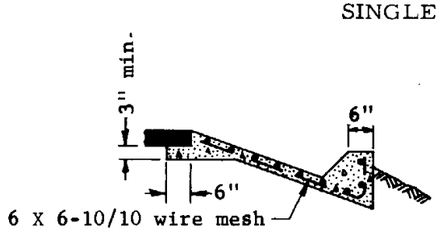

SECTION A-A

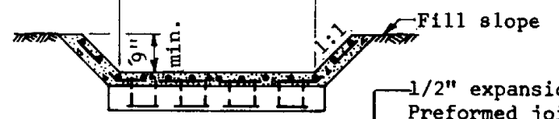

SPILLWAY SECTION

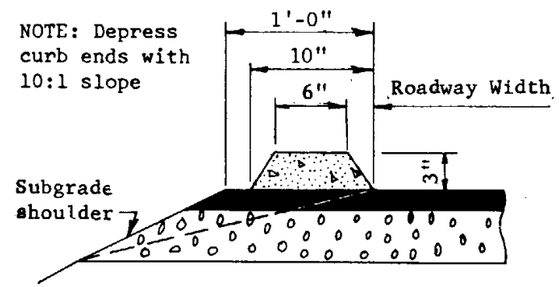

EMBANKMENT CURB

Indicates inlet

Indicates spillway

⊕ Preferred guard rail post location.

GENERAL NOTES

Concrete for the spillway inlet, spillway and outlet shall be Class A.

Concrete for the embankment curb shall be as specified in the Specifications.

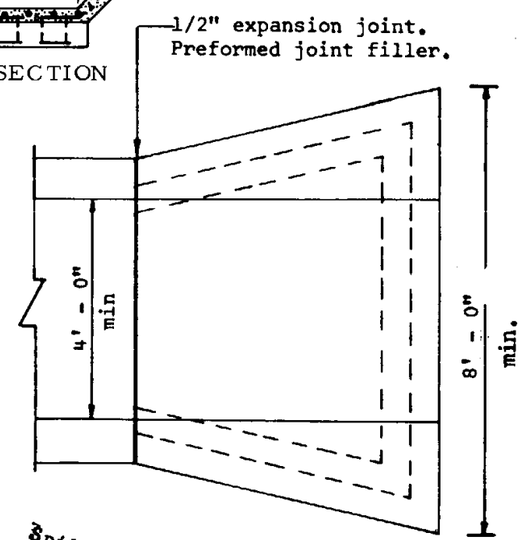

NOTE: Where rock is encountered, the outlet may be omitted.

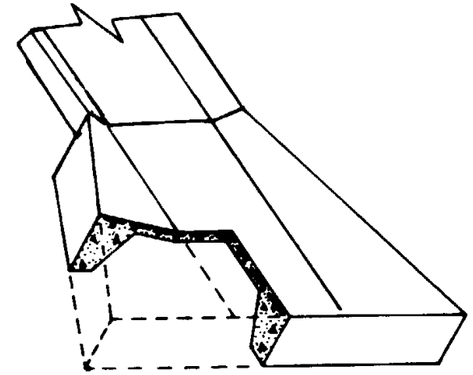

OUTLET DETAIL

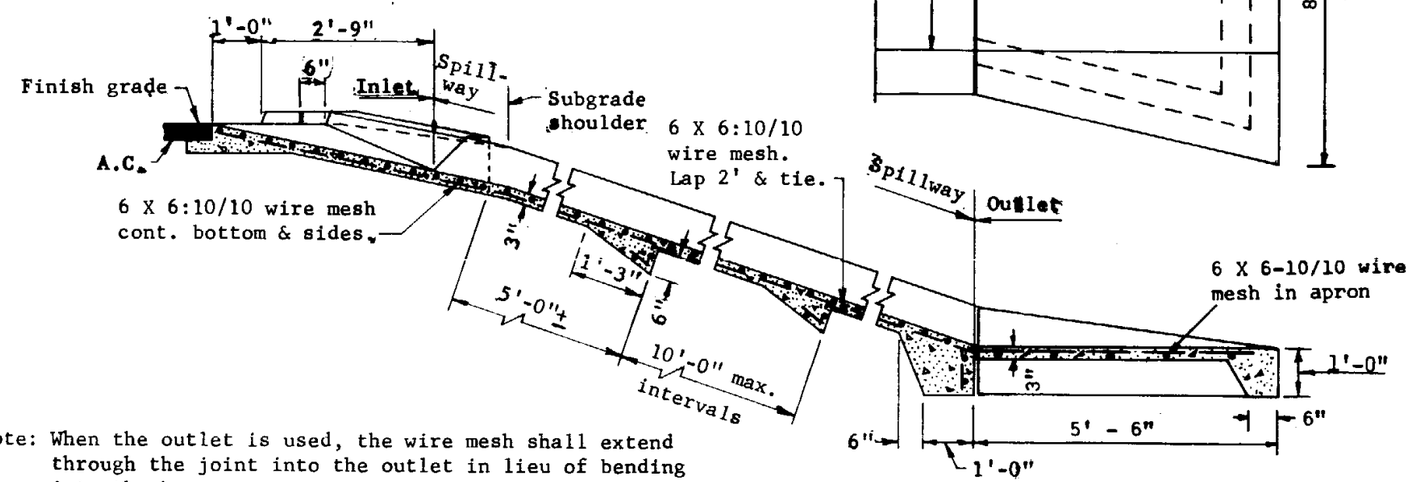

Note: When the outlet is used, the wire mesh shall extend through the joint into the outlet in lieu of bending into the key.

SECTION ON SPILLWAY ℄
DOUBLE INLET

ARIZONA HIGHWAY DEPARTMENT
CONSTRUCTION SECTION

Rev 9/68 11/68 5/69 2/70 5/72

CONCRETE SPILLWAY INLET & OUTLET EMBANKMENT CURB

Drawn	L.O.M.	Drawing No.
Traced	J.A.W.	C-4.01
Checked	R.W.	
Approved Asst. State Eng Const	F. Landin	

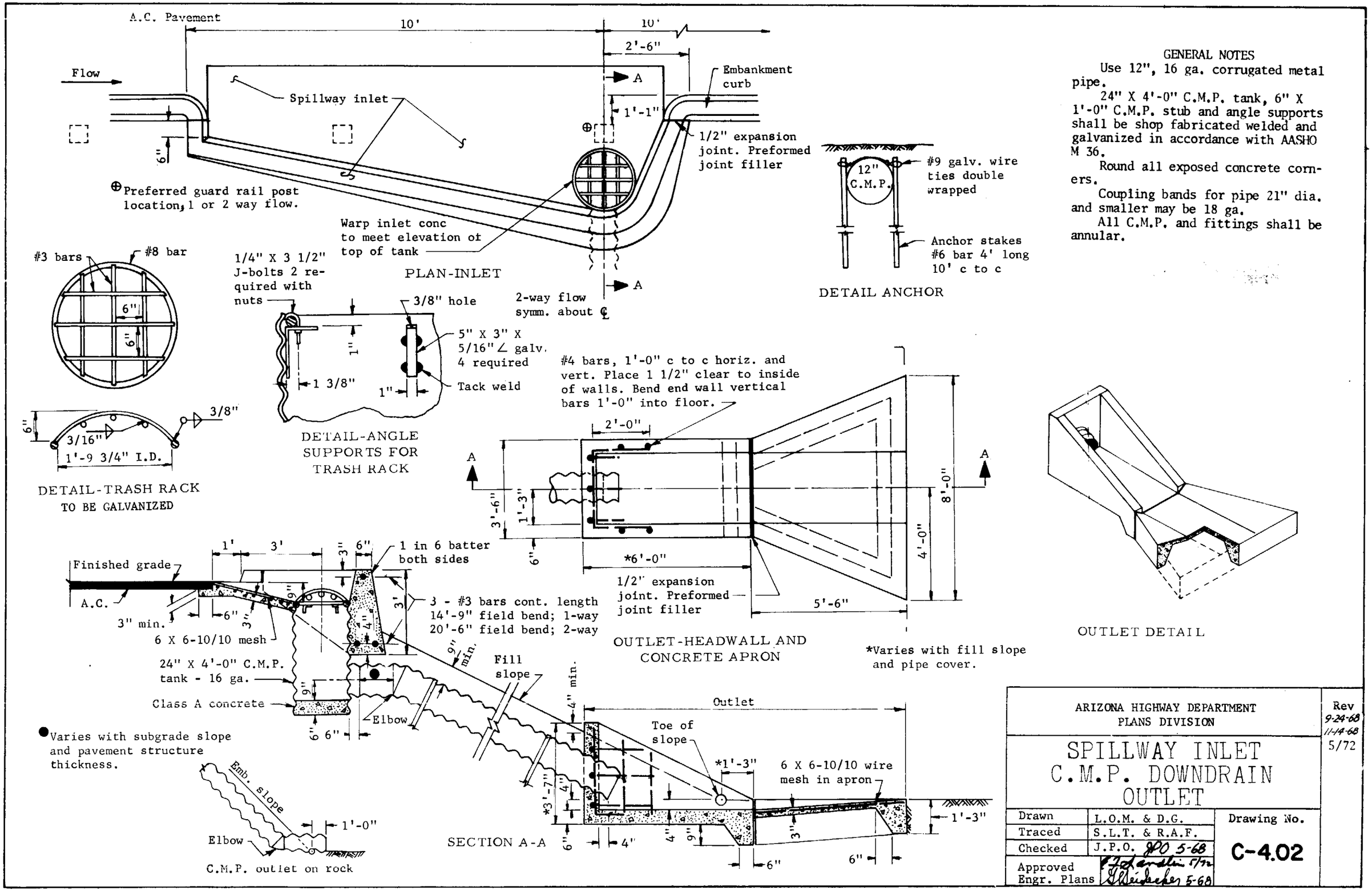

GENERAL NOTES

Use 12", 16 ga. corrugated metal pipe.

24" X 4'-0" C.M.P. tank, 6" X 1'-0" C.M.P. stub and angle supports shall be shop fabricated welded and galvanized in accordance with AASHO M 36.

Round all exposed concrete corners.

Coupling bands for pipe 21" dia. and smaller may be 18 ga.

All C.M.P. and fittings shall be annular.

ARIZONA HIGHWAY DEPARTMENT PLANS DIVISION		Rev 9-24-68 11-14-68 5/72
SPILLWAY INLET C.M.P. DOWNDRAIN OUTLET		
Drawn	L.O.M. & D.G.	Drawing No.
Traced	S.L.T. & R.A.F.	C-4.02
Checked	J.P.O. JPO 5-68	
Approved Engr. Plans	F.J. Landlin 5/72 G. Weidecker 5-68	

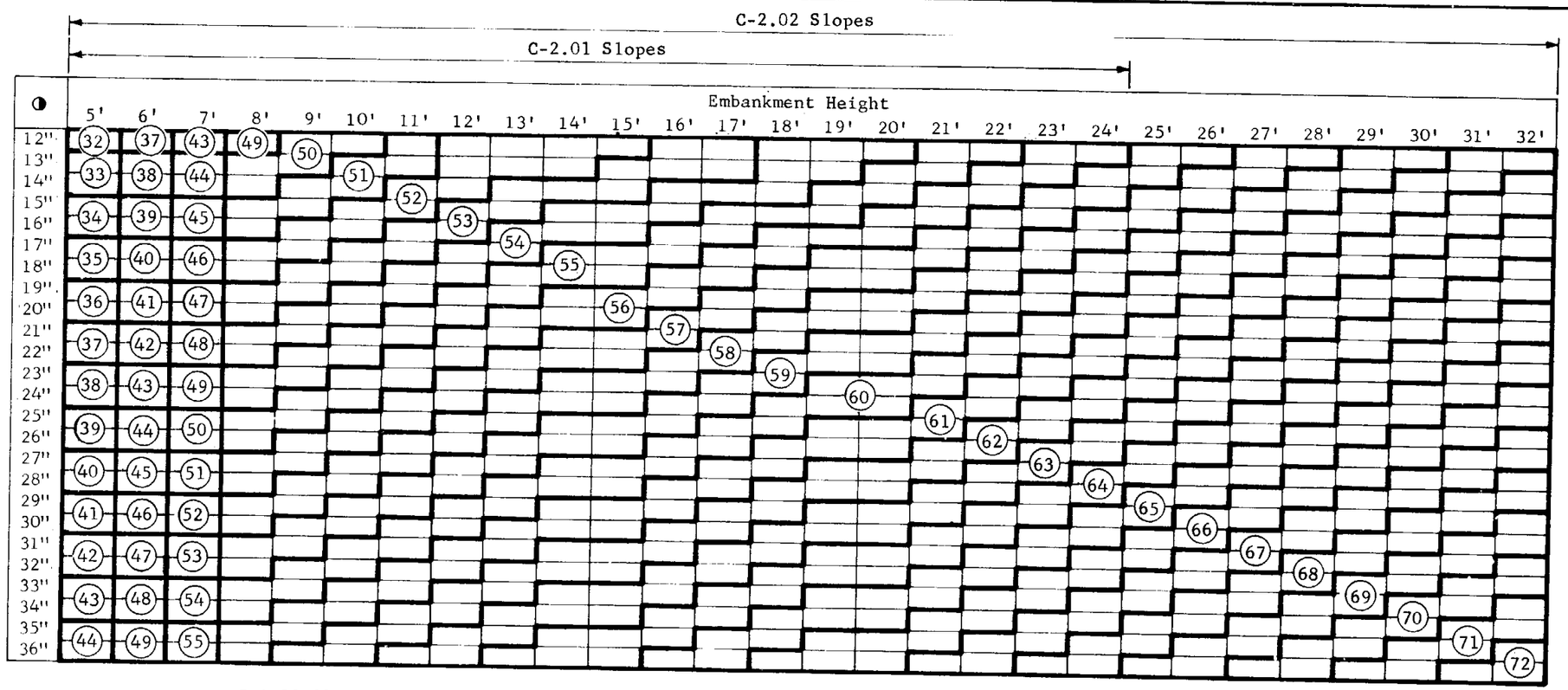

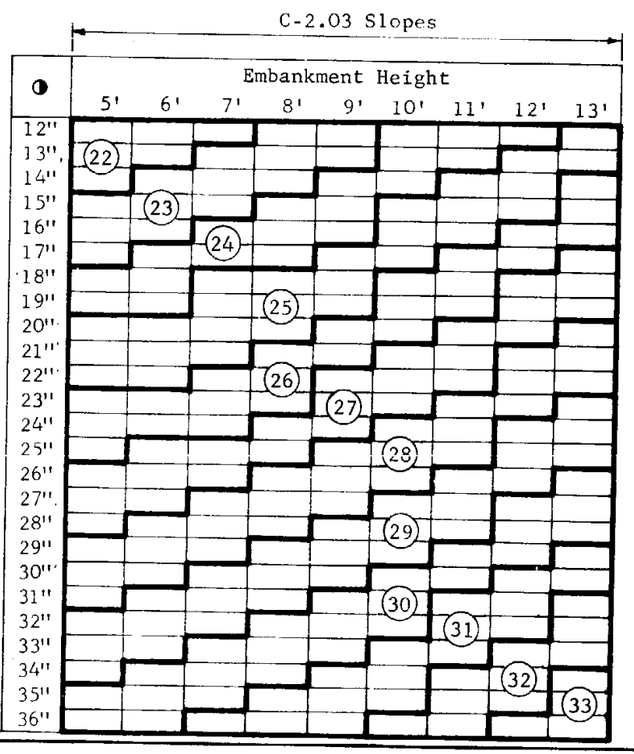

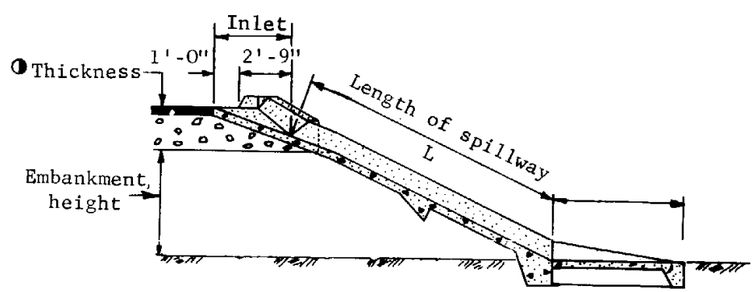

GENERAL NOTES

For C-2.01 slopes with emb. height over 24', L = L for 24' emb. height from table + 2.24(emb. height - 24).

For C-2.02 slopes with emb. height over 32', L = L for 32' emb. height from table + 1.8(emb. height - 32).

For C-2.03 slopes with emb. height over 13', L = L for 13' emb. height from table + 1.8(emb. height - 13).

◑ Indicates thickness of pavement structure.

◯ Indicates Length of Spillway.

ARIZONA HIGHWAY DEPARTMENT
CONSTRUCTION SECTION

Rev 3-71 5/72

CONCRETE SPILLWAY LENGTH TABLE

Drawn	D.G. 12-67	Drawing No.
Traced	D.G. 1-68	C-4.03
Checked	J.P.O. 5-68	
Approved Asst. State Eng Const		

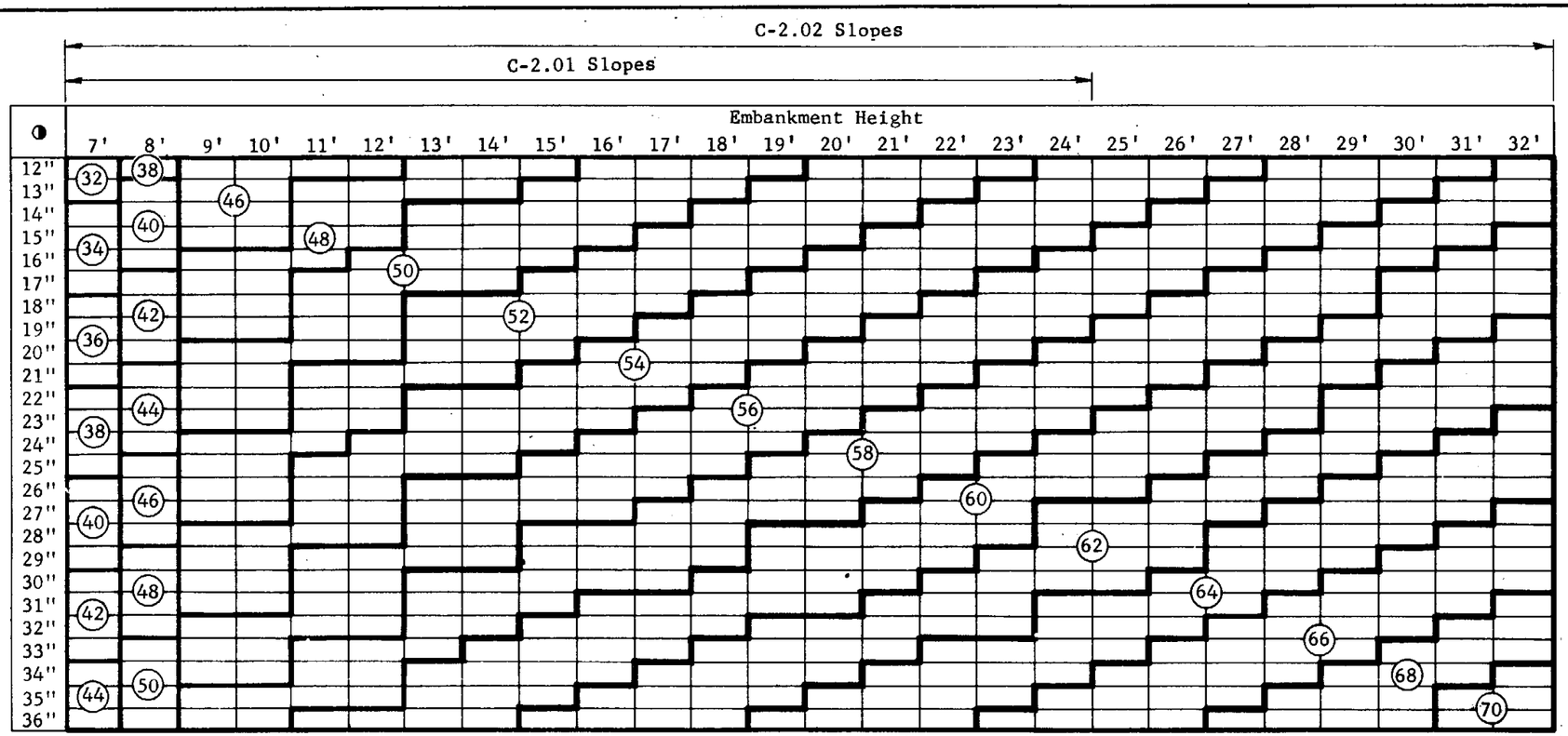

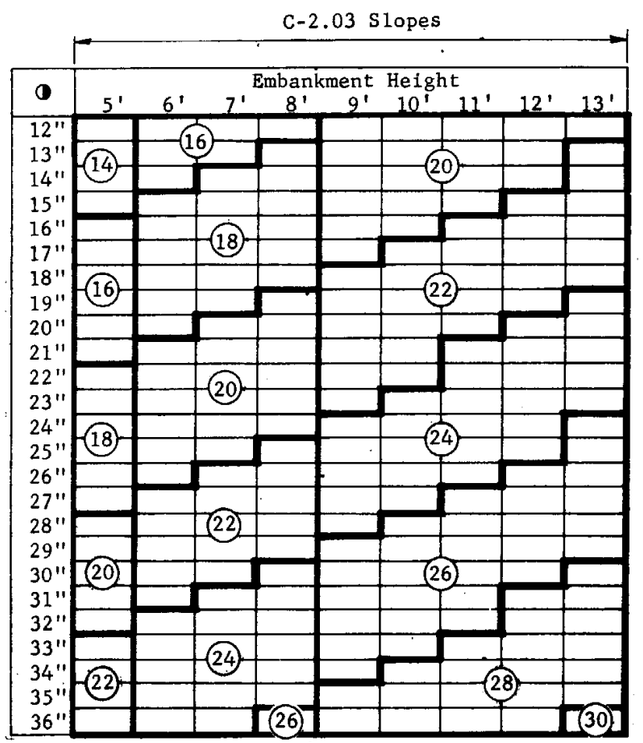

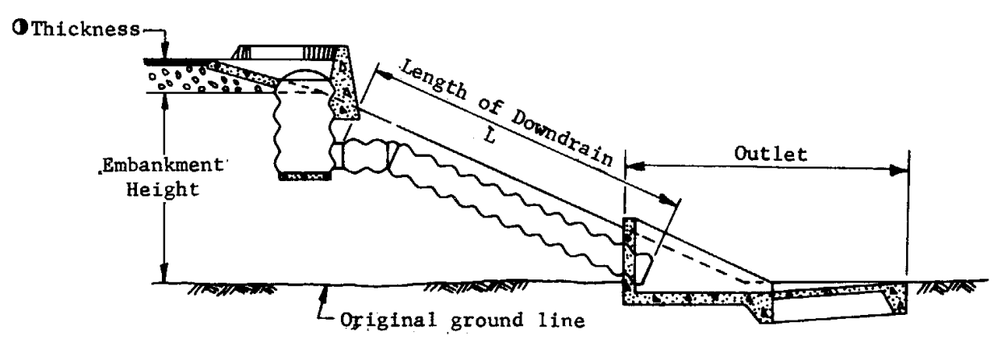

GENERAL NOTES

For C-2.01 slopes with emb. height over 24', L = L for 24' emb. height from table + 2.24(emb. height - 24).

For C-2.02 slopes with emb. height over 32', L = L for 32' emb. height from table + 1.8(emb. height - 32).

For C-2.03 slopes with emb. height over 13', L = L for 13' emb. height from table + 1.8(emb. height - 13).

◑ Indicates thickness of pavement structure

◯ Indicates Length of Spillway.

ARIZONA HIGHWAY DEPARTMENT
CONSTRUCTION SECTION

Rev 3-71

C.M.P. DOWNDRAIN LENGTH TABLE

Drawn	J.W. & D.G. 2-67	Drawing No.
Traced	R.A.F. 12-67	C-4.04
Checked	J.P.O. JPO 5-68	
Approved Asst. State Eng Const		

NOTE: Radii shown for single curbs are typical throughout for respective type.
h=curb height as shown on Plans.

SINGLE CURB

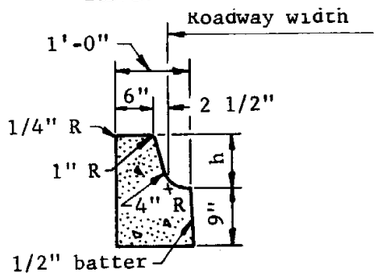

COMBINED CURB & GUTTER

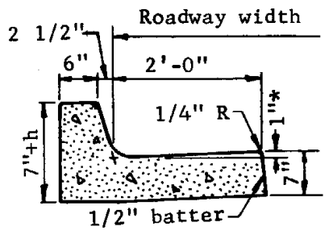

TYPE "A"

For 6" curb height or over

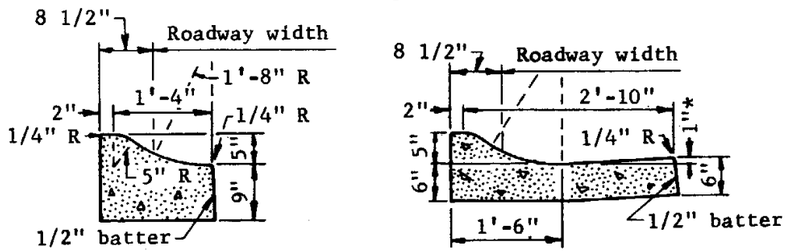

TYPE "E"

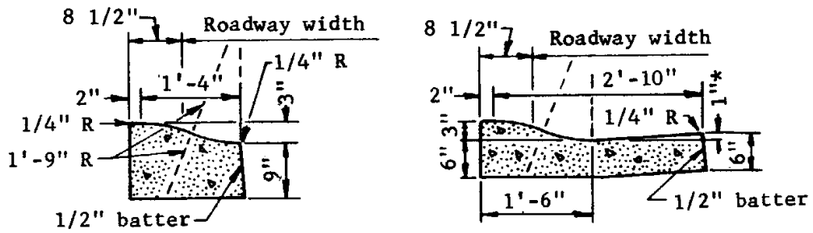

TYPE "F"

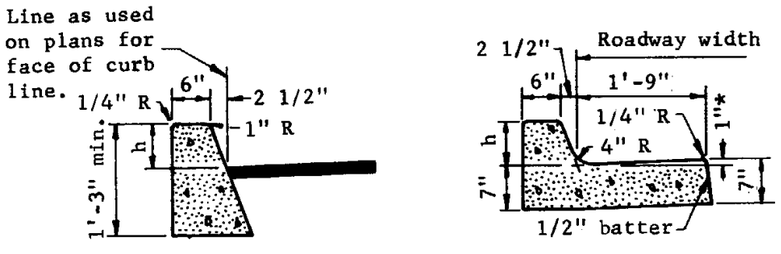

TYPE "G"

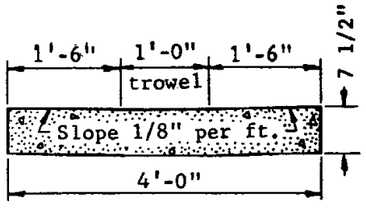

VALLEY GUTTER

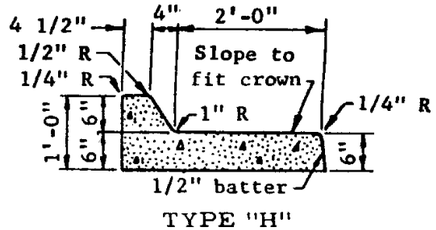

TYPE "H"

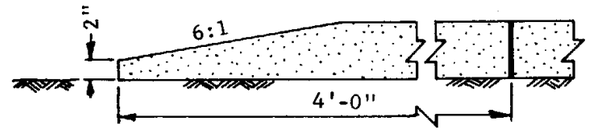

CURB TERMINAL SECTION

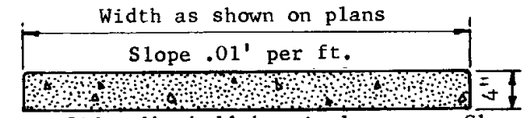

Sidewalk shall be single course Class A concrete, sweat finished and jointed with a 1/4" deep jointing tool at centers approximately equal to the width of the sidewalk.

Sidewalk shall be scored to a depth of 1" at intervals matching the joints in the adjacent curb.

Sidewalk shall be edged with a 1/4" radius edging tool.

CONCRETE SIDEWALK

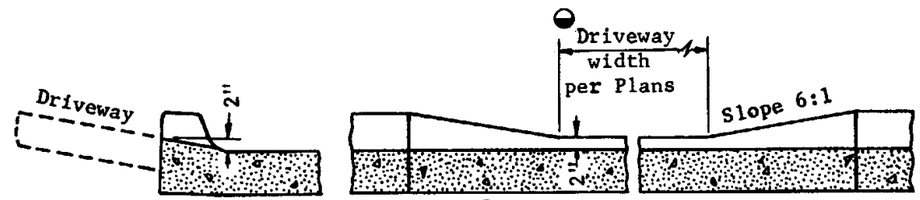

Center joint required if driveway width over 20'

DEPRESSED CURB FOR DRIVEWAY ENTRANCE

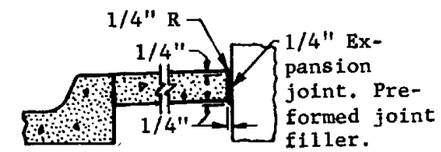

SIDEWALK EXPANSION JOINT

GENERAL NOTES

All curbs and gutters shall be single course, Class A concrete unless otherwise noted on plans.

All curbs shall be trowel finished.

All gutter flow lines shall be troweled to an accurate grade for a width of 9".

Curbs, or curb and gutter, shall have a 1/4" joint extending all the way through the concrete at locations matching the joints in adjacent P.C.C. pavement; at approximately 15' centers when adjacent pavement is bituminous and at tangent points in curb returns and at structures. The joints may be open or with redwood filler left in place.

* When curb and gutter is located with the roadway section sloping away from the curb, the gutter slope shall match the roadway slope.

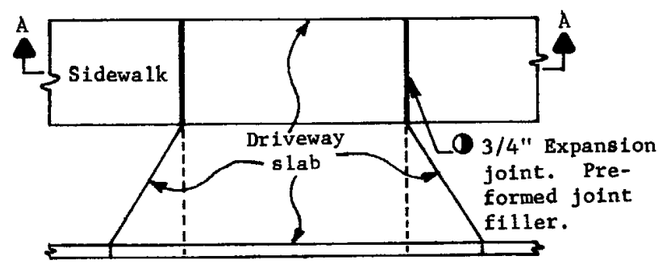

PLAN

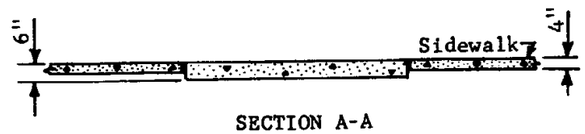

SECTION A-A

Joint is required between driveway slab and adjacent sidewalk.

SIDEWALK AT DRIVEWAY

ARIZONA HIGHWAY DEPARTMENT PLANS DIVISION			Rev
CURB, GUTTER, SIDEWALK & DRIVEWAY DETAILS			
Drawn	O.K. 3-1935	Drawing No.	
Traced	R.A.F. 6-8-67	C-5.01	
Checked	J.P.O. JPO 5-68		
Approved Engr. Plans	G Weidecker 5-68		

NOTE: Shaded area to be constructed & measured as valley gutter. Area(sq.ft.)/4' =lin. ft.

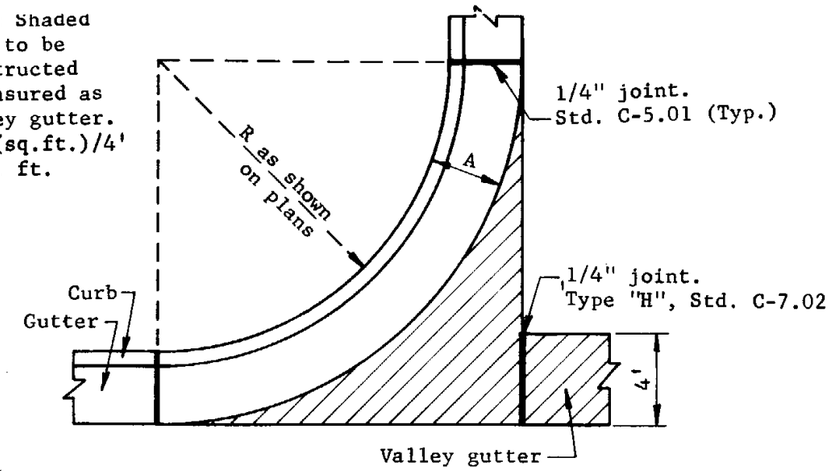

TYPICAL VALLEY GUTTER CONSTRUCTION AT STREET INTERSECTION OR ALLEY

A = Overall curb and gutter width.
d = Drop from point controlled by grade to outside edge of gutter.
F = Total crown from ℄ elev. to gutter grade.
a = Distance from ℄ to inside edge of gutter.
b = Distance from outside edge of gutter to point controlled by grade.
e = Drop from ℄ to inside edge of gutter.

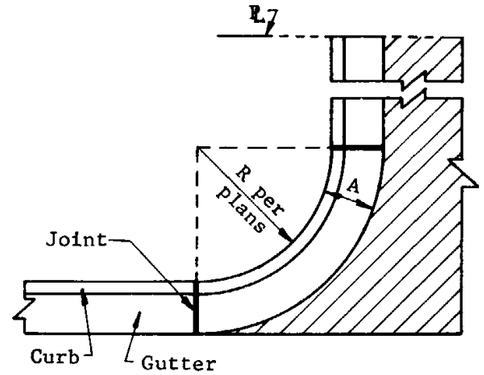

TYPICAL CONCRETE ALLEY OR DRIVEWAY CONSTRUCTION

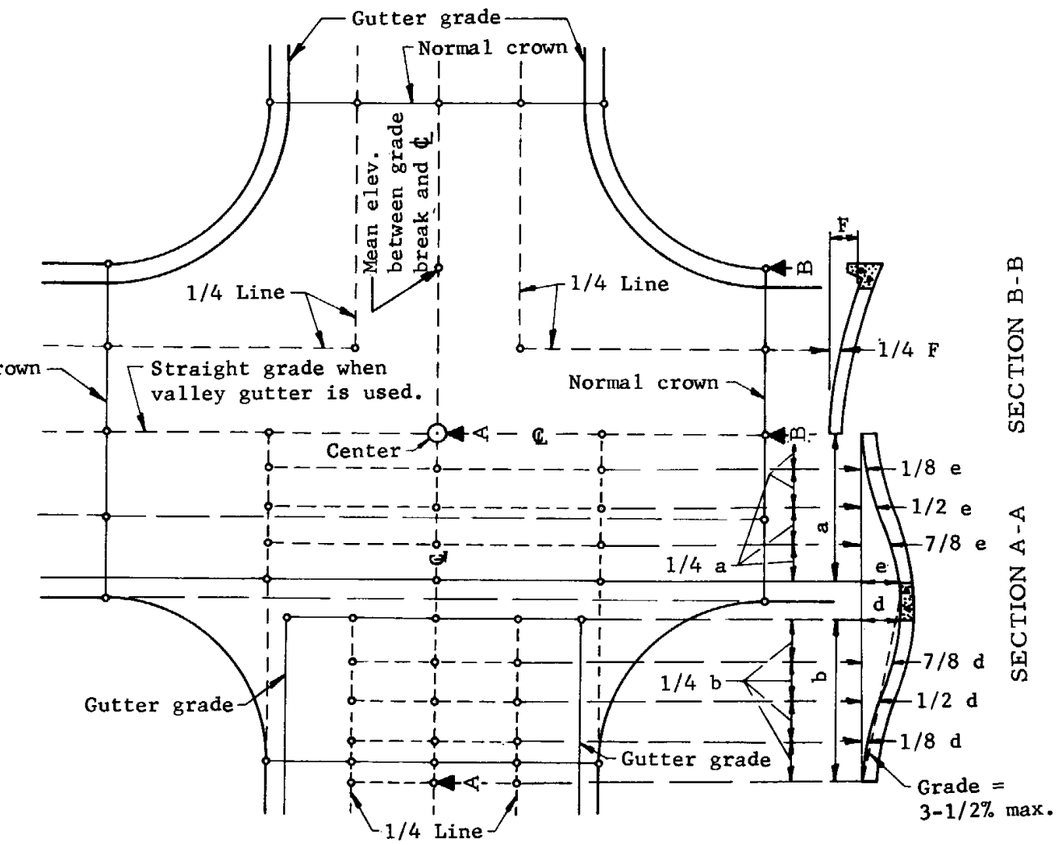

GENERAL NOTES

To determine the value of F, see roadway typical section.

For Curb and Gutter details, see Std. C-5.01.

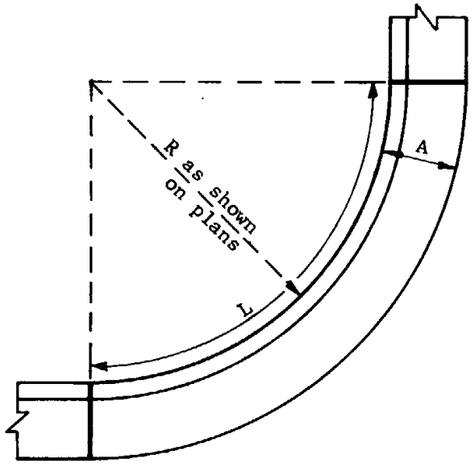

Single curb and combined curb and gutter will be measured along the back of the curb.

CURB & GUTTER MEASUREMENT ON CURVES

FORMULA FOR QUARTER POINTS

S = Sum of intersecting pavement widths. (Distance between gutter grade lines.)

D = Drop from center of intersection to center of return

where S = 0' to 90', P = 0.17
" S = 91' to 100', P = 0.18
" S = 101' to 110', P = 0.19
" S = 111' to 136', P = 0.20

PD = Drop from center of intersection to quarter point.

STREET INTERSECTION GRADES

ARIZONA HIGHWAY DEPARTMENT PLANS DIVISION		Rev
CURB & GUTTER MEASUREMENT & STREET INTERSECTION GRADES		
Drawn	O.K. & W.M.D.	Drawing No.
Traced	R.A.F. 9-16-66	C-5.02
Checked	J.P.O. JPO 5-68	
Approved Engr. Plans	E.Weidecker 5-68	

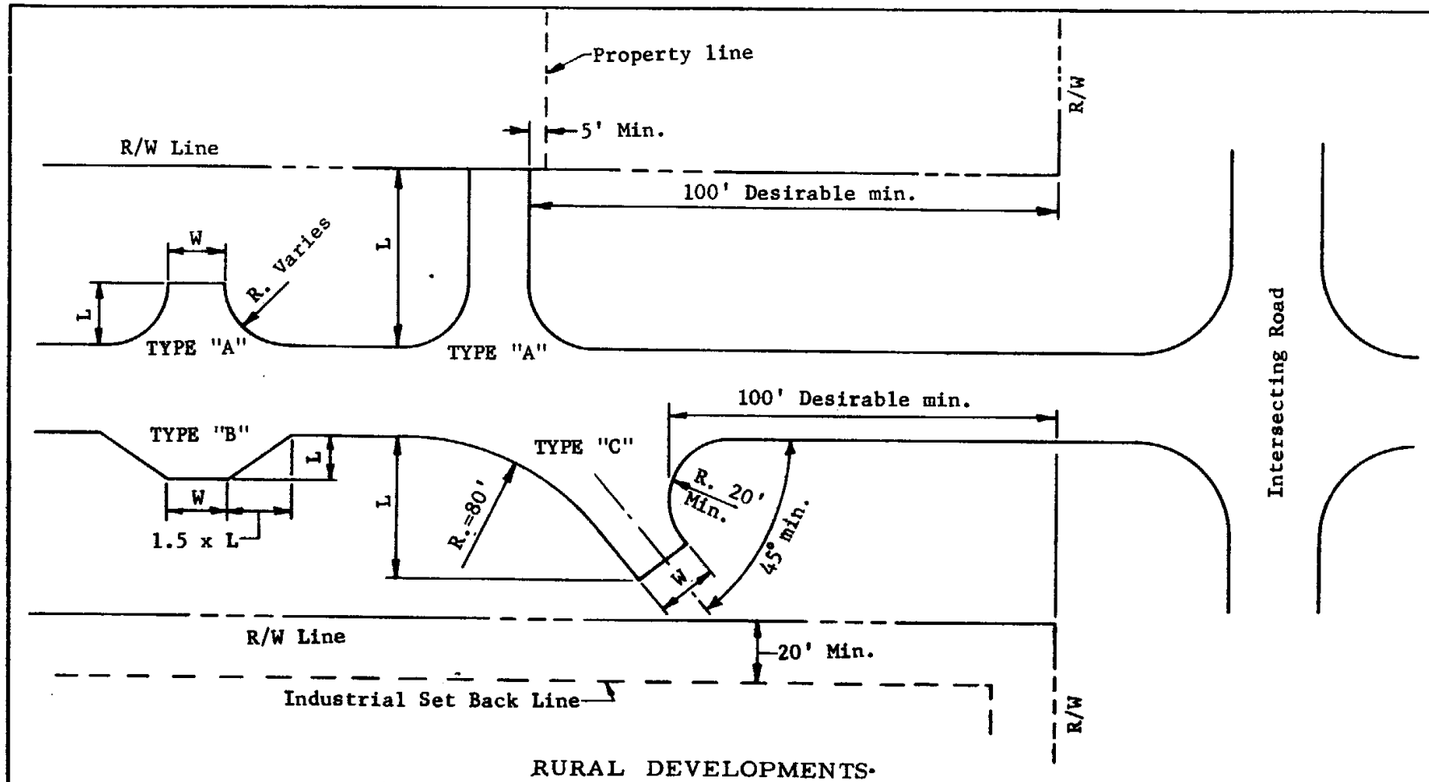

RURAL DEVELOPMENTS

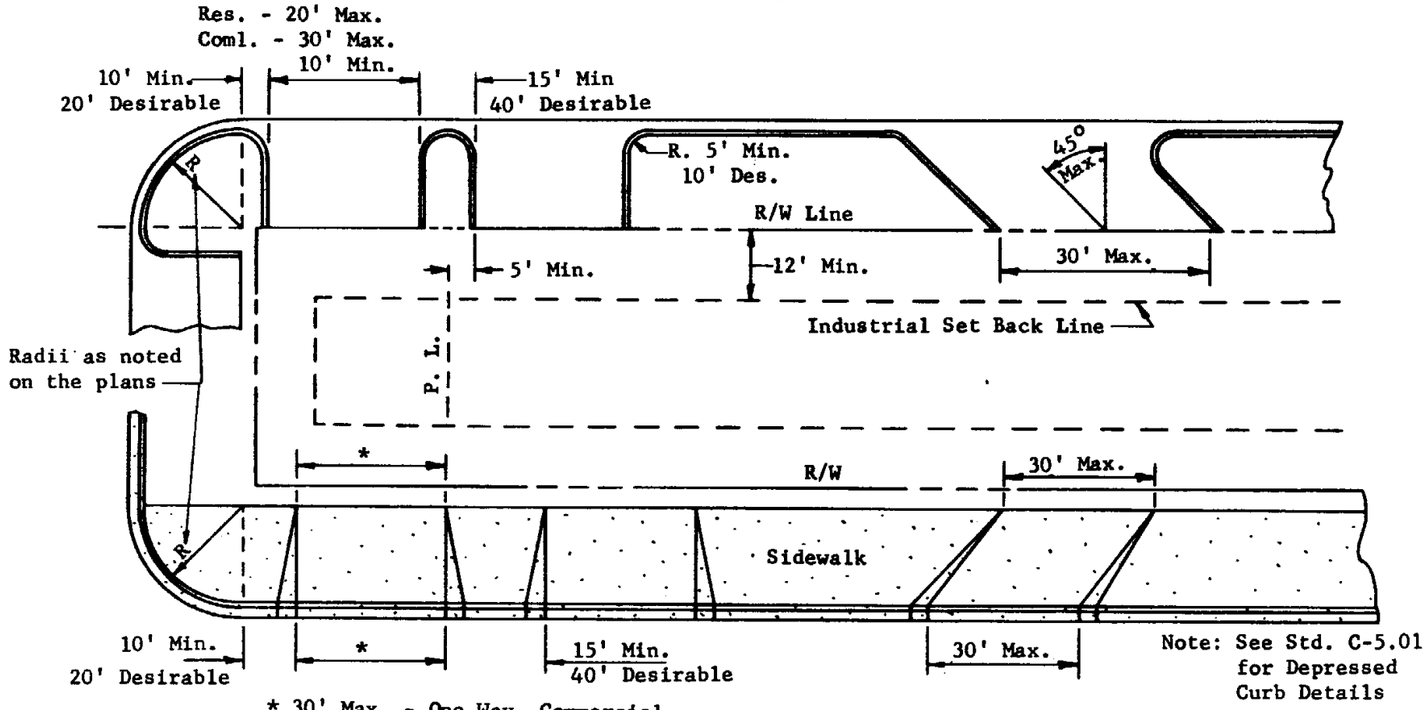

Note: See Std. C-5.01 for Depressed Curb Details

URBAN DEVELOPMENTS

GENERAL NOTES

Paved Turnouts: W=10' Minimum & 40' Maximum.
Plans notation will be W x L, Surface Material, Type & Standard.
Example: 16' x 30' A.C.T.O. Type "A" Standard C-6.01.

Base material shall be the same as that shown for main roadway, unless otherwise noted.

Excavation or Embankment for turnouts shall be included in quantities for main roadway.

Dimensions indicated as minimum shall be avoided wherever possible in favor of those indicated as desirable

Curbed driveways and depressed curbs shall be located as noted on Plans or as directed by the Engineer.

All radii shown are to back of curb.

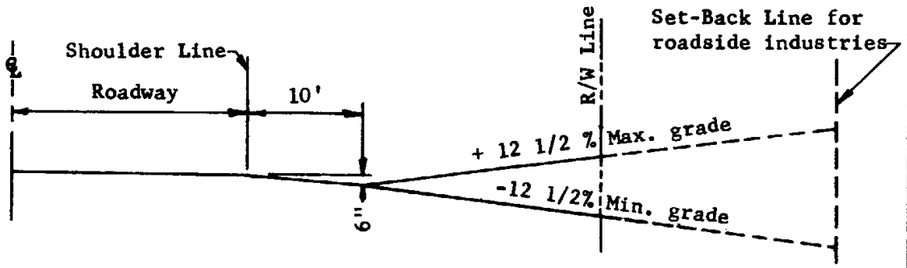

TYPICAL SECTION AT RURAL DRIVEWAY ENTRANCE
See Std. C-5.01 for Depressed Curb Details

ARIZONA HIGHWAY DEPARTMENT PLANS DIVISION		Rev
TURNOUT & DRIVEWAY LAYOUT		
Drawn	L. O. Moe 2-64	Drawing No.
Traced	R.A.F. 11-18-66	C-6.01
Checked	J.P.O. 5-68	
Approved Engr. Plans	5-68	

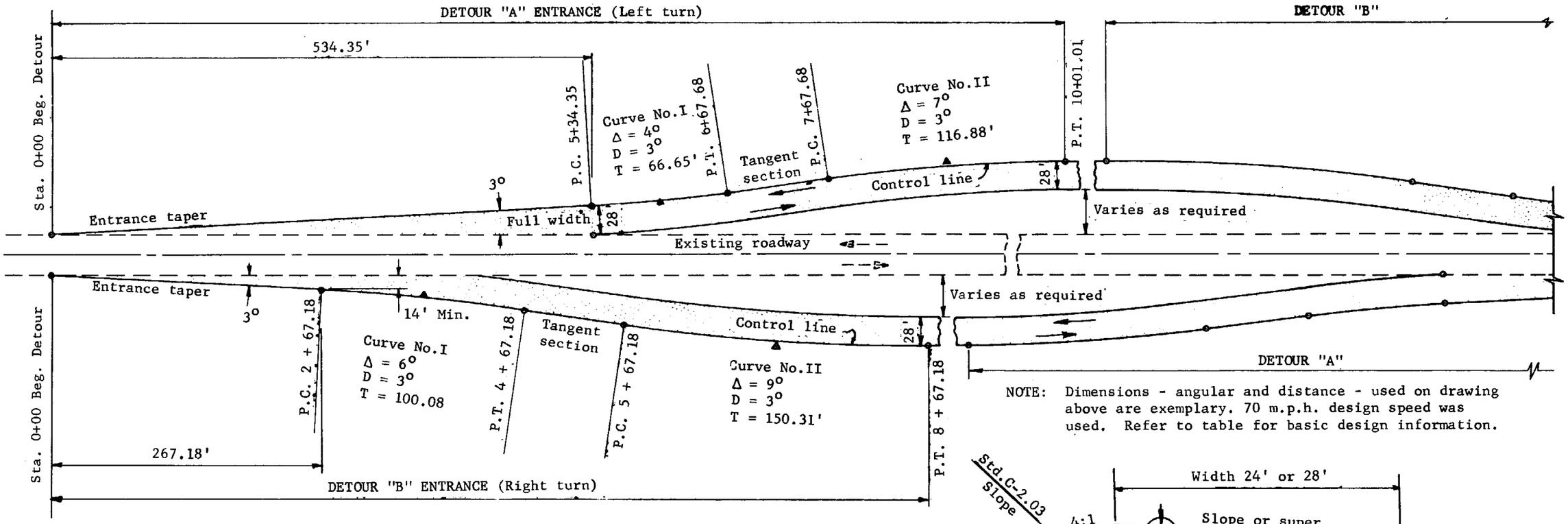

NOTE: Dimensions - angular and distance - used on drawing above are exemplary. 70 m.p.h. design speed was used. Refer to table for basic design information.

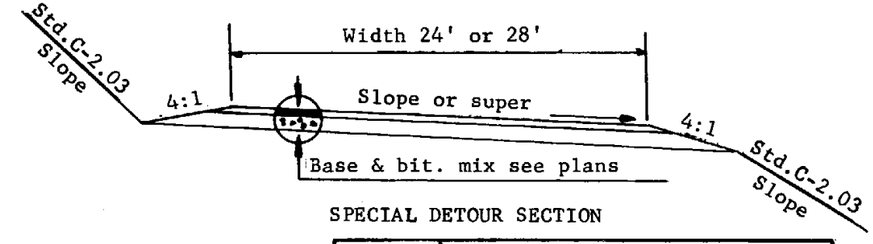

SPECIAL DETOUR SECTION

GENERAL NOTES

Detour "A" entrance shall be used where approaching vehicle must turn left. Detour "B" shall be used where approaching vehicle must turn right.

Detour from a horizontal curve: On the inside of the curve the detour take off shall be a curve, see table. On the outside a tangent take off shall be used. A vertical curve may be required to effect a smooth grade change.

The design speed shall be comparable between vertical and horizontal alignment.

The entrance design speed of a detour shall not be less than the normal posted speed of the existing roadway. The design speed for the remainder of the detour may be 20 m.p.h. less than the normal posted speed.

Any intermediate detour entrance may be designed on the basis of normal posted speed less 20 m.p.h. where visible construction activity has slowed traffic for the preceding 1/4 mile.

The minimum width of the detour shall be 28' for existing roadways 34' or wider and a minimum of 24' for existing roadways less than 34' in width.

The entrance taper for Detour "A" shall be extended until full detour width is attained. For Detour "B" the entrance taper shall be extended until a minimum of 14' is attained beyond the edge of existing roadway.

Any deviation from this standard must be approved by the Plans Engineer and Traffic Engineer and the Engineer shall submit the alignment and profile of the proposed change for their review.

Native material used in constructing the detour embankment will be considered suitable for backfill around pipe; however, it shall be reasonably free of rocks and debris

Tangent Roadway		Curved Roadway		
Entrance Design Speed	Entr.Taper Def'l. Angle	Exist. Horiz. Curve	Detour "A" Take off Curve	Detour "B" Take off Curve
70	3°	1°	2°	2°30'
60	3°	2°	3°	3°30'
50	4°	3°	4°	5°
40	6°	4°	5°	6°
30	10°	5°	6°	7°
		6°	7°	8°
		7°	8°	9°
		8°	9°	10°

Entrance Design Speed	Max. Horizontal Curvature			
	Curve No. I		Curve No. II	
	D	Superelev.	D	Superelev.
70	3°	.09'/ft.	3°	.06'/ft.
60	3°	.08'/ft.	4°	.09'/ft.
50	4°	.07'/ft.	6°	.09'/ft.
40	6°	.07'/ft.	10°	.09'/ft.
30	10°	.07'/ft.	19°	.09'/ft.

ARIZONA HIGHWAY DEPARTMENT
CONSTRUCTION SECTION

DETOUR ENTRANCE DESIGN TABLE

Rev 12/68 5/72

Drawn	J.P.O.
Traced	R.A.F.
Checked	J.P.O.
Approved Asst. State Eng Const.	F.L. Sandlin

Drawing No. C-6.02

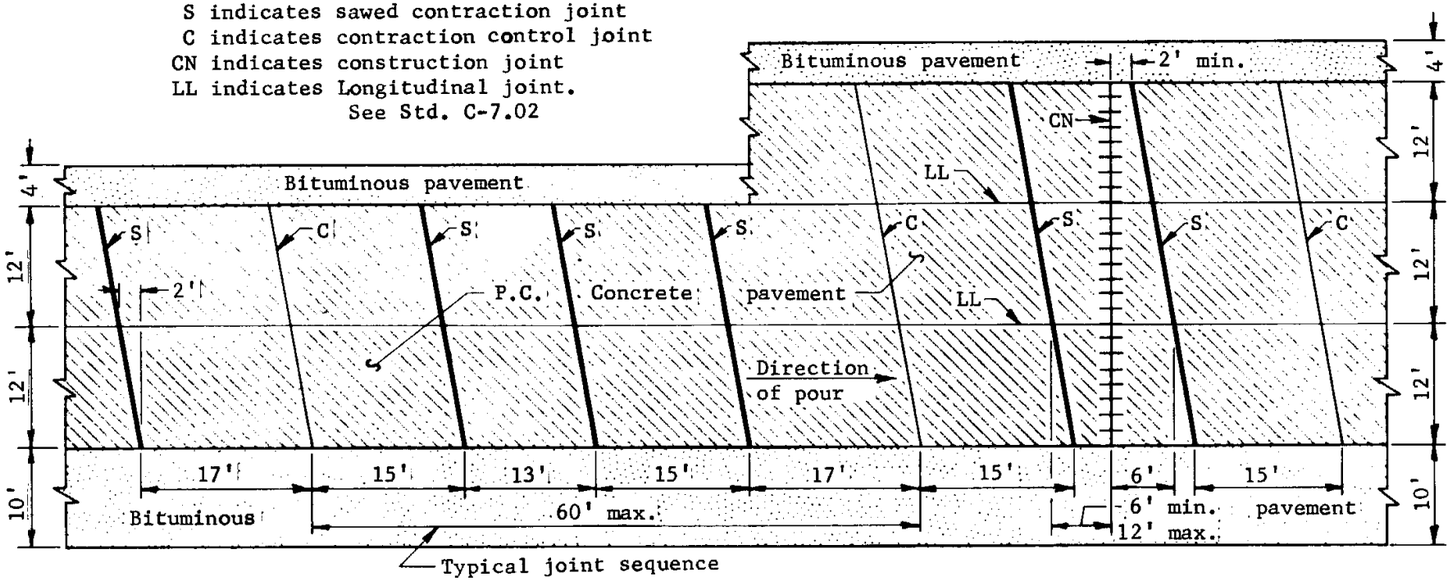

PLAN
See General Notes

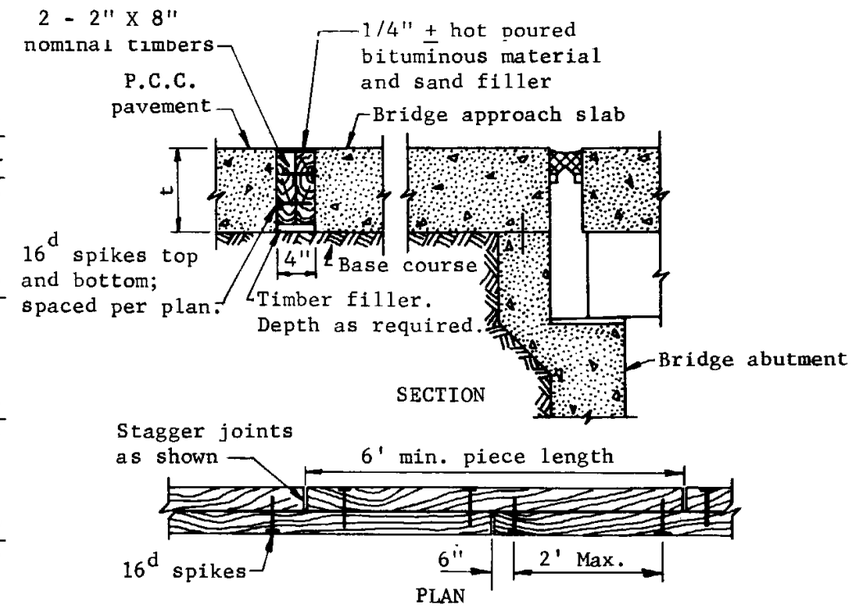

TRANSVERSE EXPANSION JOINT AT BRIDGE APPROACH SLAB

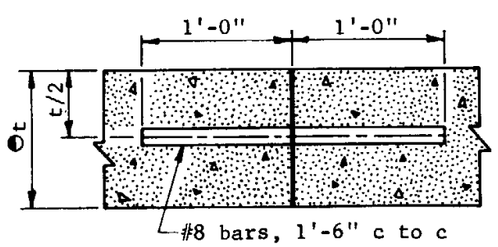

Indicates P.C.C. thickness

CONSTRUCTION JOINT
To be used at end of pour

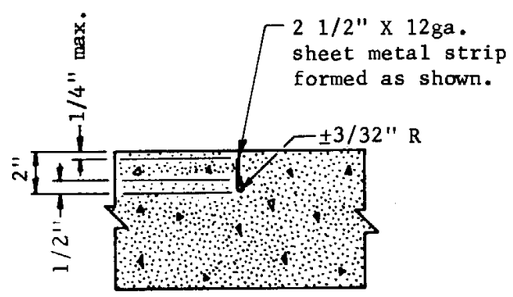

INSERT TYPE CONTROL JOINT

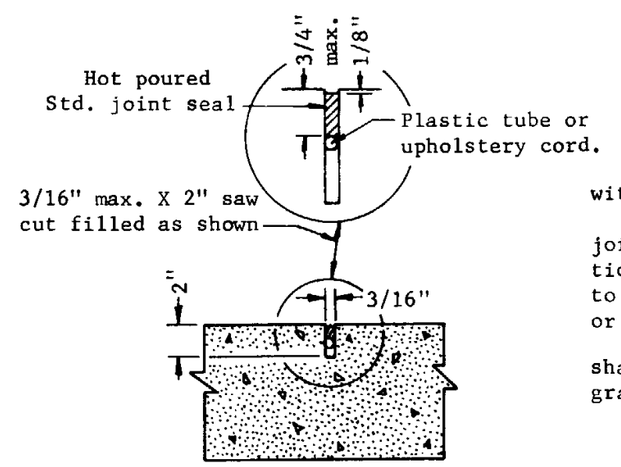

SAWED TYPE CONTROL JOINT

GENERAL NOTES

All transverse joints shall be in line with joints in adjacent slabs.

At intersection of side roads or streets, joints shall be placed to give the intersection a symmetrical appearance while conforming to the cross section of the intersecting road or street.

Timbers used in transverse expansion joint shall be rough redwood and conform to commercial grade.

ARIZONA HIGHWAY DEPARTMENT PLANS DIVISION			Rev
PORTLAND CEMENT CONCRETE PAVEMENT TRANSVERSE JOINTS			
Drawn	L.O.M.	Drawing No.	
Traced	R.A.F. 12-66	C-7.01	
Checked	J.P.O. JPO 5-68		
Approved Engr. Plans	G Heidecker 5-68		

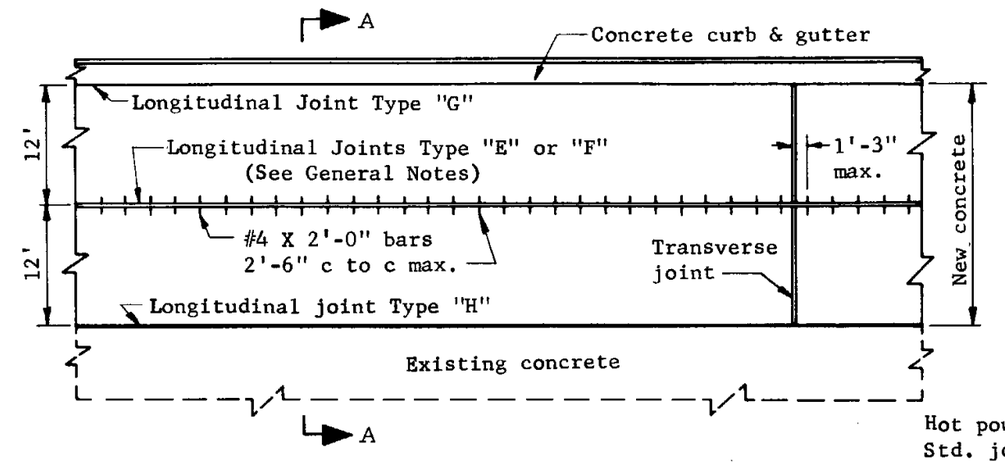

PLAN

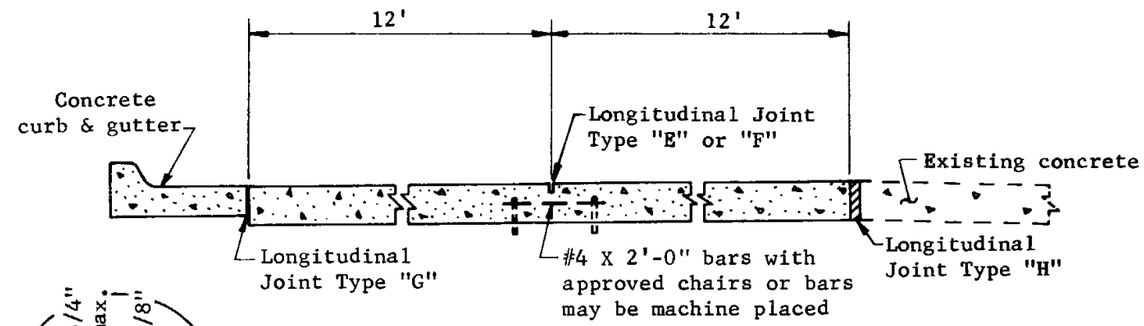

SECTION A-A

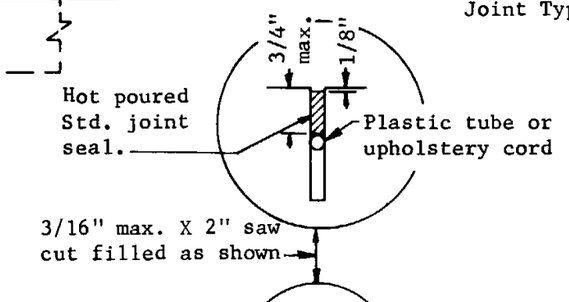

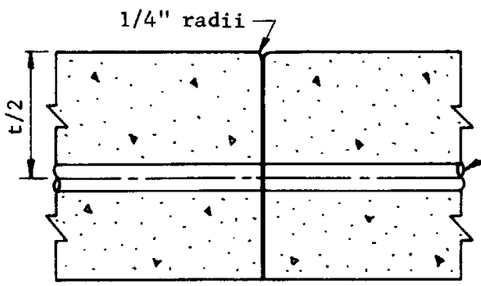

JOINT TYPE "E"

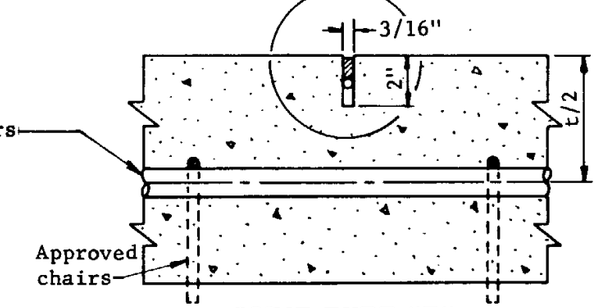

JOINT TYPE "F"

Note:
"t" indicates
pavement thickness

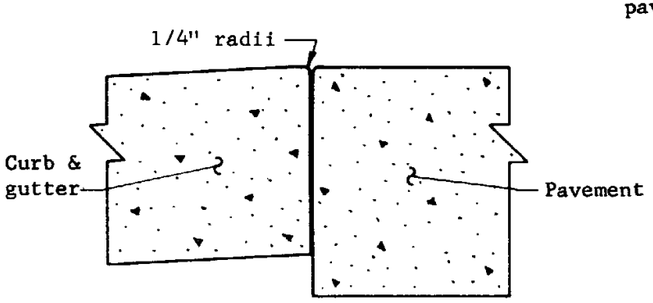

JOINT TYPE "G"

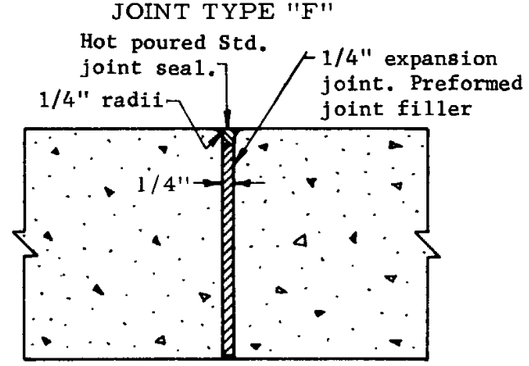

JOINT TYPE "H"

LONGITUDINAL JOINT DETAILS

GENERAL NOTES

All bars used in joints shall be deformed. They shall be held securely in place, parallel to the subgrade and perpendicular to roadway centerline.

All formed longitudinal joints shall be finished with an edging tool not less than 1'-0" wide and 1'-6" long.

In slip form type pavement construction, Longitudinal Joint Type "F" shall be used. In fixed form type construction either Longitudinal Joint Type "E or "F" may be used.

ARIZONA HIGHWAY DEPARTMENT PLANS DIVISION			Rev
PORTLAND CEMENT CONCRETE PAVEMENT LONGITUDINAL JOINTS			
Drawn	O.K.	Drawing No.	
Traced	R.A.F. 12-66		
Checked	J.P.O. JPO 5-68	C-7.02	
Approved Engr. Plans	G Weidenbach 5-68		

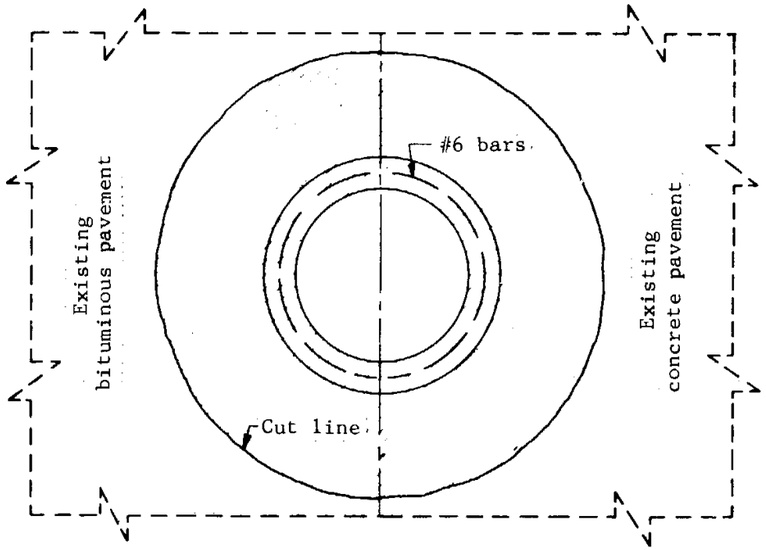

PLAN

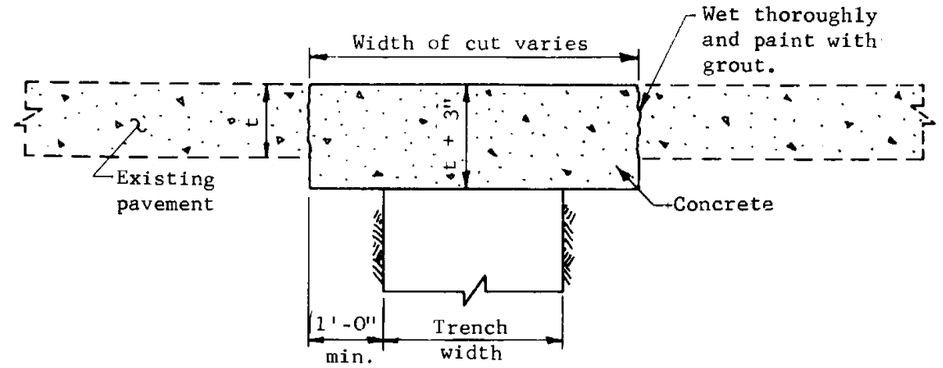

CUT IN CONCRETE PAVEMENT

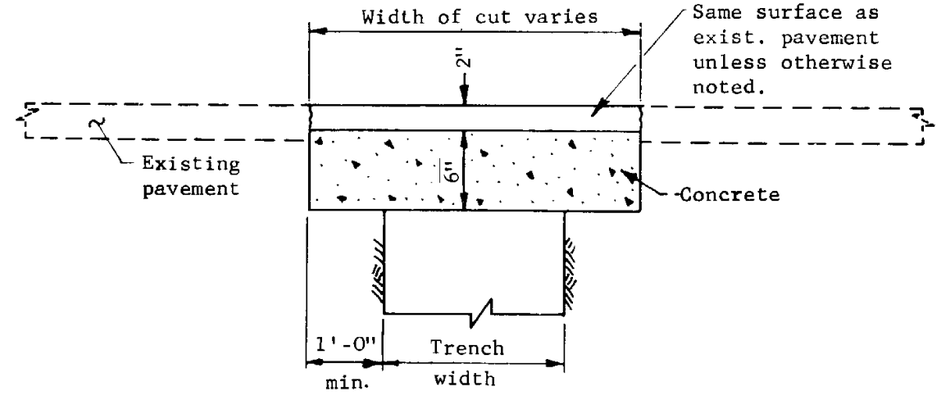

CUT IN BITUMINOUS PAVEMENT

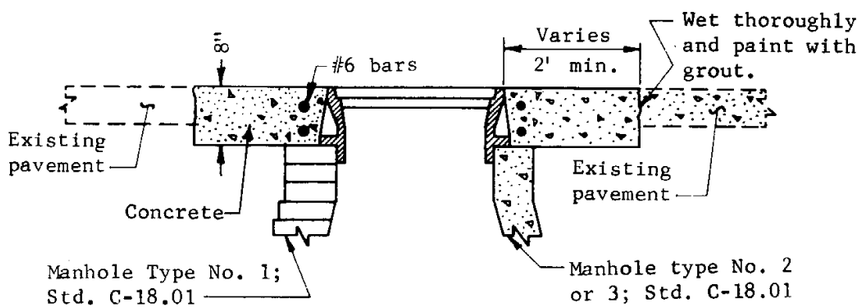

SECTION

PAVEMENT CUT REPLACEMENT FOR MANHOLE

GENERAL NOTES
All concrete shall be Class A.

ARIZONA HIGHWAY DEPARTMENT
CONSTRUCTION SECTION

Rev 5/72

PAVEMENT CUT REPLACEMENT

Drawn	O.K.	Drawing No.
Traced	R.A.F.	C-7.03
Checked	J.P.O.	
Approved Asst. State Eng Const.	F. Franklin	

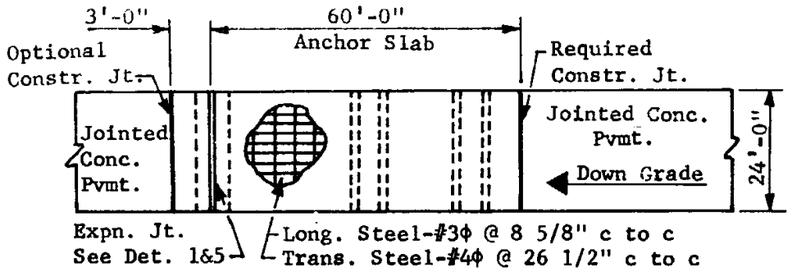

PLAN

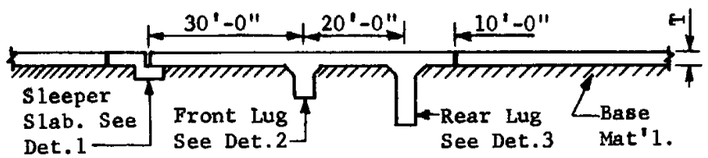

SECTION

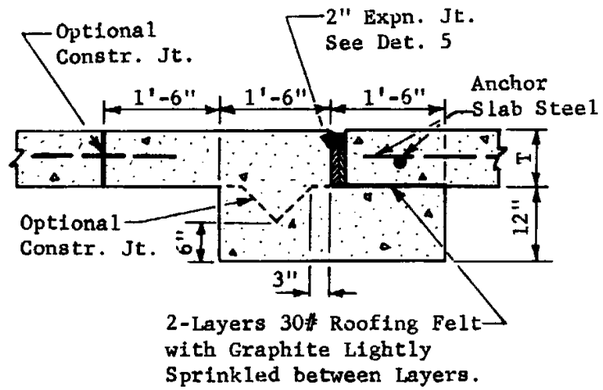

DETAIL 1-SLEEPER SLAB

GENERAL NOTES

Anchor slab shall contain no transverse joints.

Anchor slab longitudinal joint shall be according to Std. C-7.02 using anchor slab transverse steel continuous through the joint.

Minimum distance between jointed concrete pavement transverse joints and the required or optional anchorage system construction joints shall be 2'.

Steel shall be structural or intermediate grade. Splices shall be a minimum of 20 x bar diameter.

Steel shall be 3" clear to anchor slab ends and edges.

Lug trenches shall be excavated to 6" minimum clearance on both sides and bottom. Bottom of trench shall be backfilled and compacted smooth and level to ±1" of required lug depth. Lug sides shall be formed. Backfill shall be free of rock and extraneous material and compacted to 95% Proctor minimum.

All concrete shall be of the same composition as that used for the jointed concrete pavement.

Expansion joint faces and sleeper slab bearing surface shall be smooth troweled.

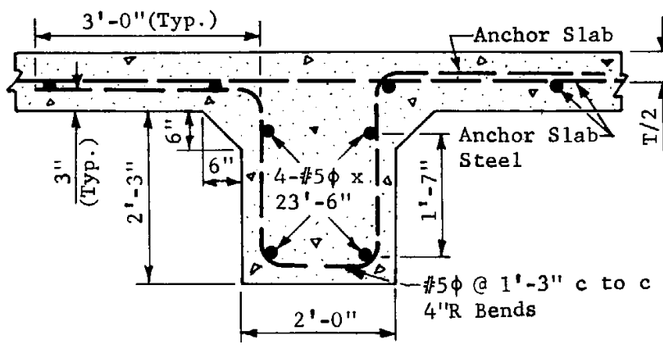

DETAIL 2-FRONT LUG
See Det.4 for
Optional Constr. Jt.

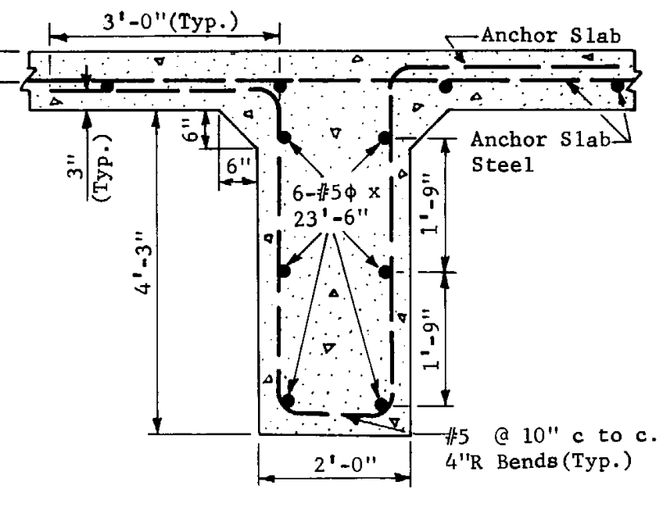

DETAIL 3-REAR LUG
See Det.4 for
Optional Constr. Jt.

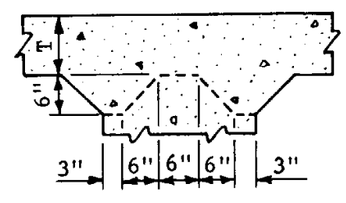

DETAIL 4-OPTIONAL
LUG CONSTR. JOINT

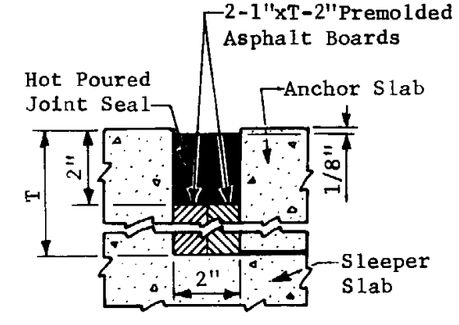

DETAIL 5
EXPANSION JOINT

ARIZONA HIGHWAY DEPARTMENT PLANS DIVISION		Rev
JOINTED CONCRETE PAVEMENT ANCHORAGE		
Drawn	D.G. 3-71	Drawing No.
Traced	D.G. 3-71	C-7.04
Checked	JHO 3-71	
Approved: Construction	[illegible]	

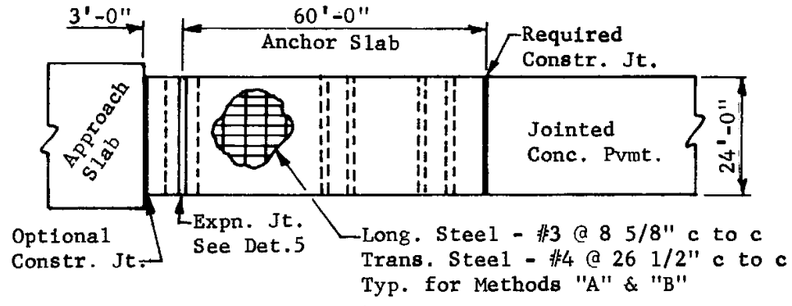

Plan

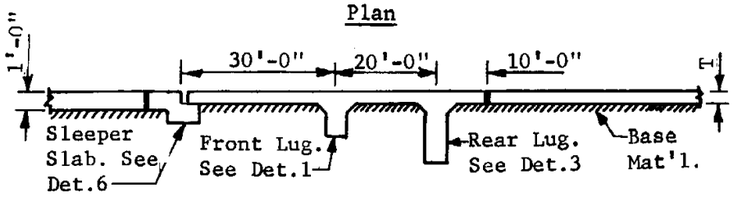

Section

ANCHORAGE METHOD "A"

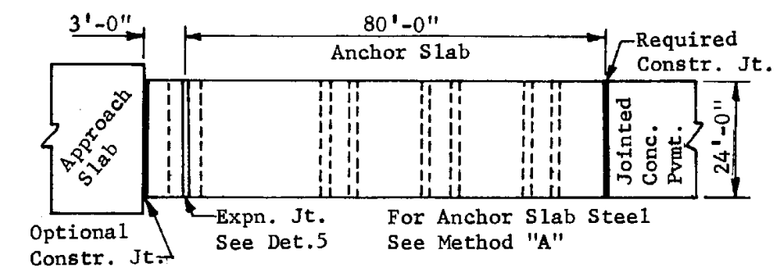

Plan

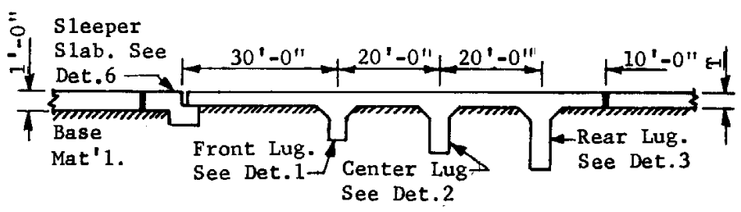

Section

ANCHORAGE METHOD "B"

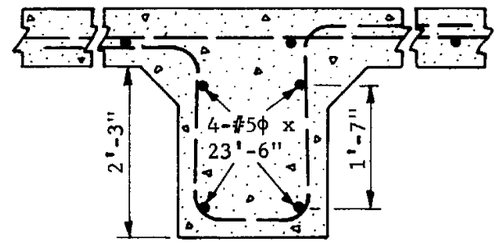

Detail 1-Front Lug

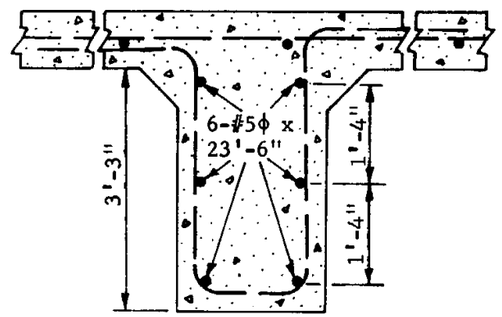

Detail 2-Center Lug

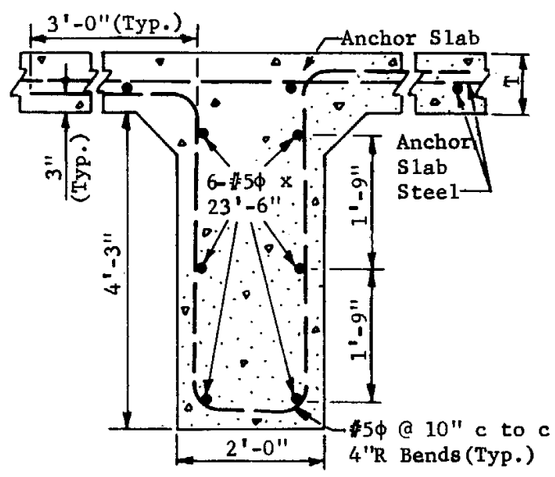

Detail 3-Rear Lug
Front & Center Lugs
Same Except as Shown

GENERAL NOTES

Method "A" shall be used for original ground and/or embankment and backfill material having a min. std Proctor density of 125#/cf and good to excellent shear resistance. Method "B" shall be used if Method "A" soil properties cannot be attained.

Anchor slab shall contain no transverse joints.

Anchor slab longitudinal joint shall be according to Std. C-7.02 using anchor slab steel continuous through joint.

Min. distance between pavement transverse joints and required or optional anchorage system construction joints shall be 2'.

Steel shall be structural or intermediate grade. Splices shall be 10 times bar diameter min.

Lug trenches shall be excavated to 6" min. clearance all around. Bottom of trench shall be backfilled and compacted smooth and level to ± 1" of required lug depth. Lug sides shall be formed. Backfill shall be free of rock and extraneous material and compacted to 95% Proctor.

All concrete shall be of the same composition as that used for the pavement.

Expansion joint faces and sleeper slab bearing surface shall be smooth troweled.

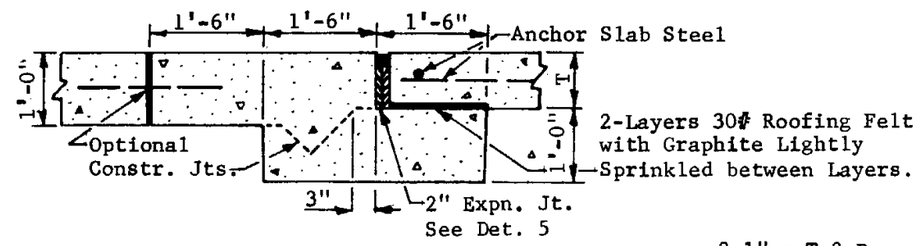

Detail 6-Sleeper Slab

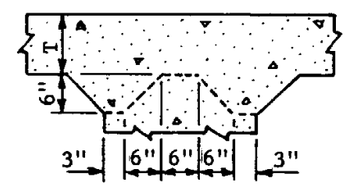

Detail 4-Lug Constr. Jt.

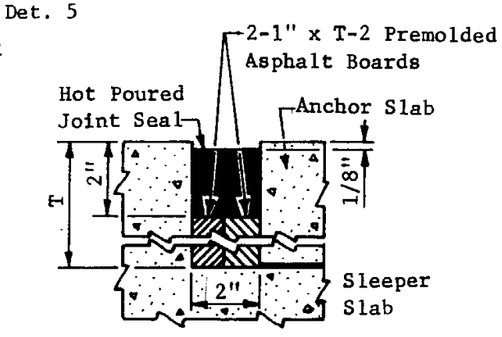

Detail 5-Expansion Jt.

ARIZONA HIGHWAY DEPARTMENT CONSTRUCTION SECTION			Rev
ANCHORAGE OF JOINTED CONCRETE PVMT. AT STRUCTURES			
Drawn	D.G. 3-71	Drawing No.	
Traced	D.G. 3-71	C-7.05	
Checked	3-71		
Approved Construction			

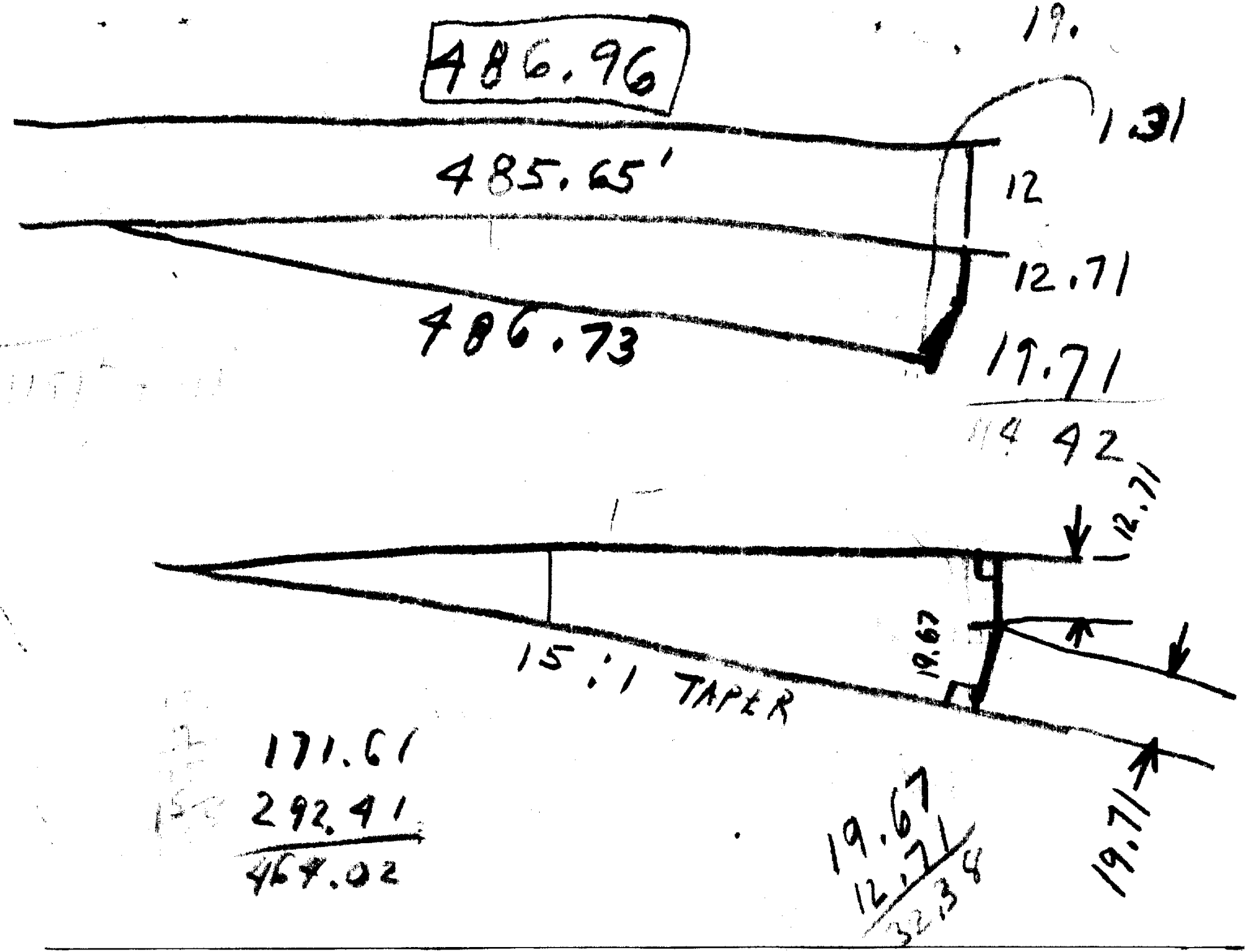
486.96
19.
1.31
485.65'
12
12.71
486.73
19.71
42
12.71
19.67
15:1 TAPER
171.61
292.41
464.02
19.67
12.71
32.38
19.71

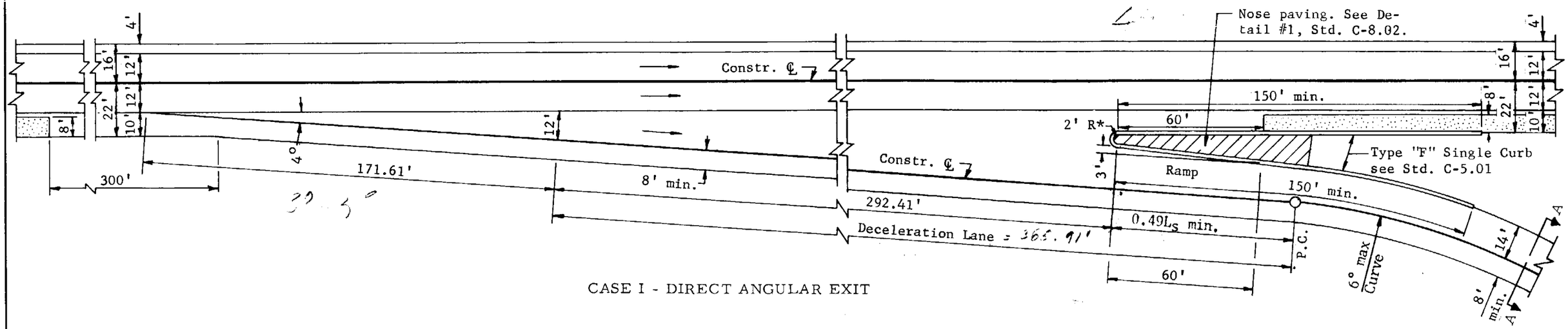

CASE I - DIRECT ANGULAR EXIT

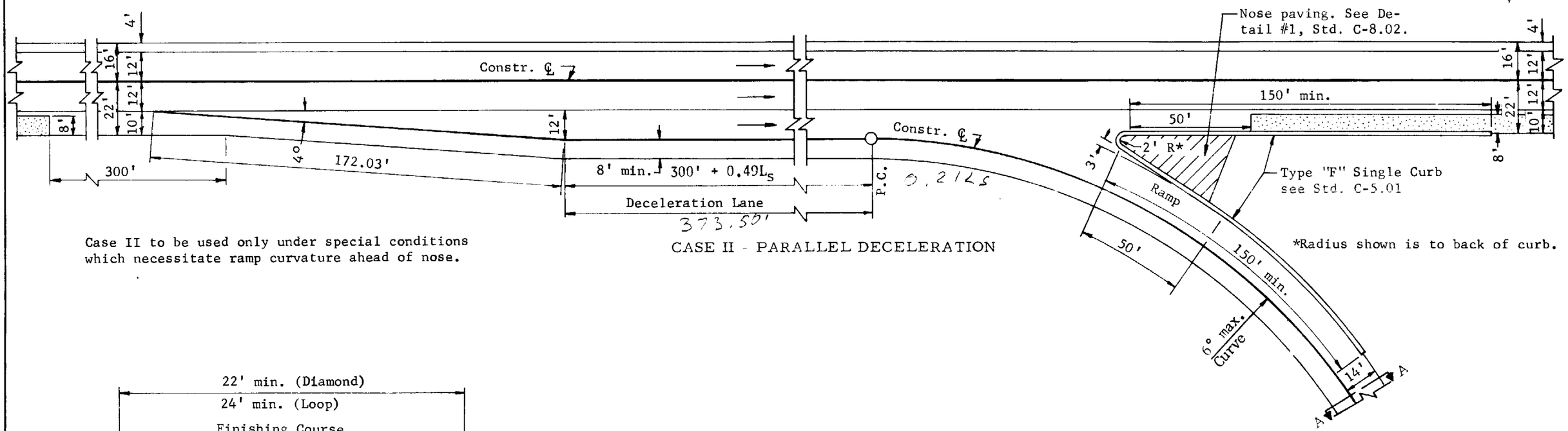

CASE II - PARALLEL DECELERATION

Case II to be used only under special conditions which necessitate ramp curvature ahead of nose.

*Radius shown is to back of curb.

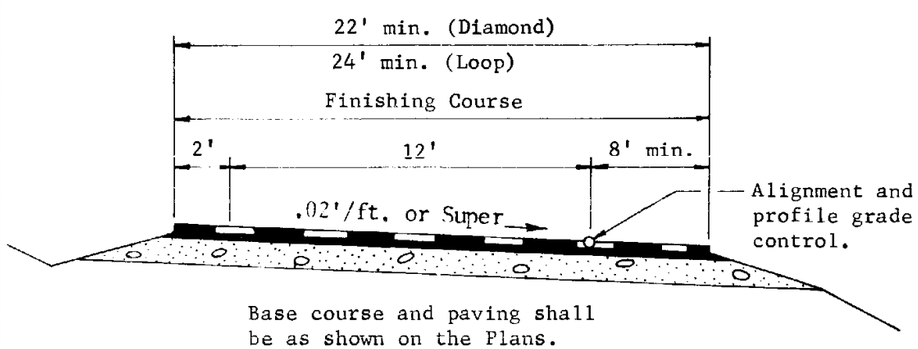

Base course and paving shall be as shown on the Plans.

SECTION A-A

GENERAL NOTES

Ramp take off from main curved roadway should provide equivalent minimum deceleration control distances.

Shaded areas indicate differential shoulder delineation.

See Pavement Marking Standards for stripe details.

ARIZONA HIGHWAY DEPARTMENT
CONSTRUCTION SECTION

Rev 5/72

TYPICAL EXIT RAMP TERMINALS

Drawn	C.B.	Drawing No.
Traced	S.L.T.	C-8.01
Checked	J.P.O.	
Approved Asst. State Eng Const		

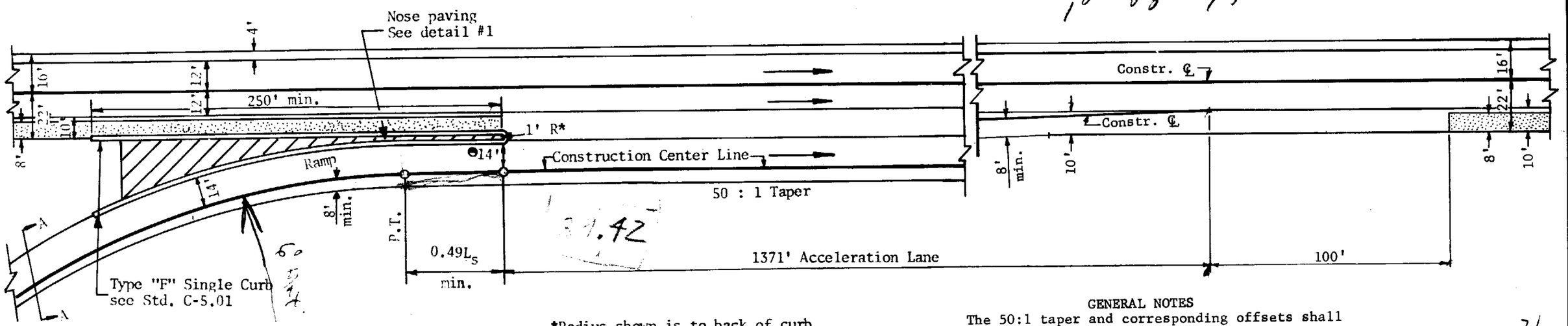

*Radius shown is to back of curb.

GENERAL NOTES

The 50:1 taper and corresponding offsets shall also apply when the main roadway has curvature or combined tangent and curvature.

Shaded areas indicate differential shoulder delineation.

See Pavement Marking Standards for stripe details.

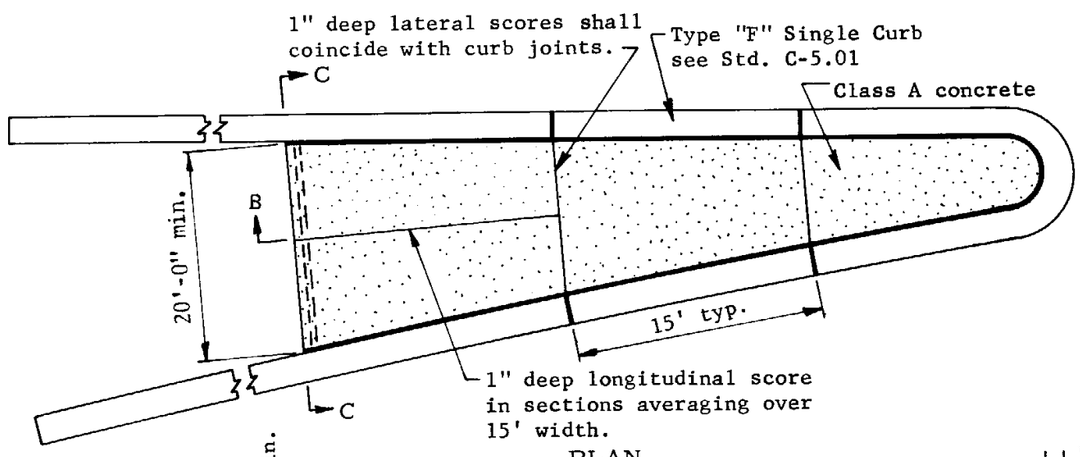

PLAN

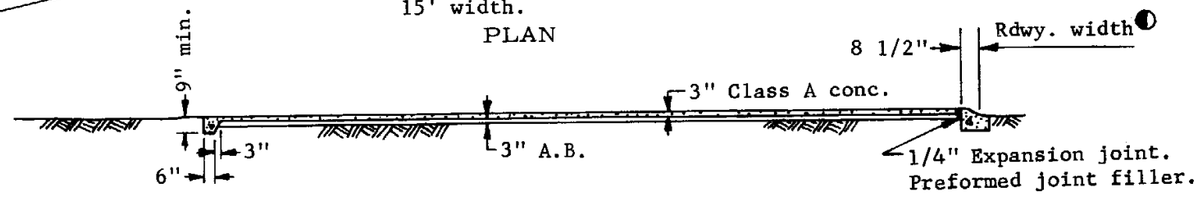

SECTION B-B

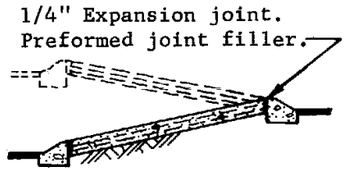

SECTION C-C

NOTE: All joints and scores shall be edged with a 1/4" radius tool.
Extend nose paving to a 20' min. width or 30' in length measured from the nose, but in no case shall the paving extend beyond curb end.

DETAIL #1 - NOSE PAVING

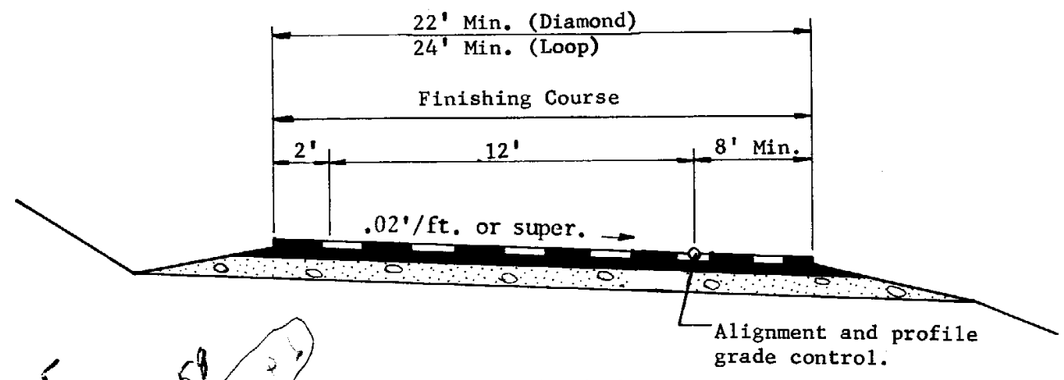

SECTION A-A

Base course and paving shall be as shown on the plans.

ARIZONA HIGHWAY DEPARTMENT CONSTRUCTION SECTION		Rev 5/72
TYPICAL ENTRANCE RAMP TERMINAL		
Drawn	J.A.W.	Drawing No.
Traced		C-8.02
Checked	R.W.	
Approved Asst. State Eng Const.		

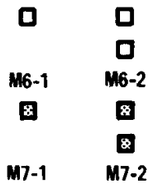

The M6-1 and M6-2 snow markers are used to mark the ends of guardrail in snow regions. The M6-1 is used at the beginning of guardrail. The M6-2 is used at the end of guardrail. The color for M6 snow markers shall be silver-white or crystal.

The M7-1 and M7-2 snow markers are used to mark the ends of curb in snow regions. The M7-1 is used to mark the beginning of curb. The M7-2 is used to mark the end of curb. The color for M7 snow markers shall be green.

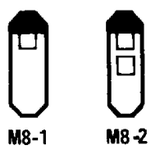

The M8-1 and M8-2 delineators are used as guide markers to indicate roadway alignment, and are placed as follows:

1. For Interstate roadways and other roadways that meet freeway standards, M8-1 delineators are placed continuously on the right side except where fixed source lighting is in operation. M8-1 delineators may be used on the left side when such placement is necessary to clearly show the alignment.

2. For roadways that do not meet freeway standards, the M8-1 delineators are placed continuously on the right side except (a) where fixed source lighting is in operation and (b) along areas used for pull-offs or parking. On sharp right-hand curves M8-1 delineators are placed on the left side. Delineators are bi-directional when applied on the left side of sharp right-hand curves on two-way roadways.

3. M8-1 delineators are placed on through roadways at interchanges regardless of fixed source lighting. The crossroad through an interchange is normally delineated on the right side and within the limits of the right-of-way at rural interchanges and grade separations.

4. When an M8-1 delineator falls within a crossroad, driveway, parking area, etc., it is moved in either direction a distance not to exceed one-quarter of the normal spacing. If proper placement still cannot be obtained, the delineator is eliminated. M8-1 delineators are not located closer than one-quarter of the normal spacing before or beyond a hazard marker or milepost marker.

5. M8-2 delineators are placed on the right side of left-curving ramps and on acceleration and deceleration lanes. M8-2 delineators are placed on the left side of tangent and right-curving ramps where indicated on C-9.06.

6. On curves, the delineator spacing may be adjusted slightly so that a delineator falls on the P.C. and P.T. of the curve.

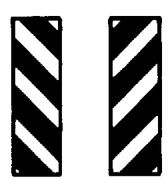

The M9-1 marker is used to mark the ends of obstructions such as narrow bridges. The marker is placed on each side of both ends of bridges on two-way roadways, and on each side of the approach end of bridges located on one-way roadways.

The M9-30(H) or M9-31(H) hazard marker is used to mark obstructions that are located within the roadway, such as exit terminal noses and channelization islands. Either device is applicable.

The M9-30(V) or M9-31(V) hazard marker is mounted on or immediately in front of obstructions that are located within 2 feet of the pavement edge. These markers are not placed behind guardrail or embankment curb. Either device is applicable.

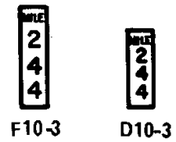

The F10-3 and D10-3 milepost markers are placed on the right side of the roadway facing approaching traffic. If they cannot be placed within 0.01 mile accuracy, they are ommitted. The F10-3 marker is used on freeways. The D10-3 is used on roadways other than freeways.

The M9-6(1) striping maintenance marker is used to mark the end of no-passing zones.

The M9-6(2) striping maintenance marker is used to mark the beginning of pavement striping at no-passing zones in effect for one direction of travel only.

The M9-6(3) striping maintenance marker is used to mark the beginning of pavement striping at no-passing zones in effect for both directions of travel.

The M9-8 hazard marker is used to mark the end of roadways for which there is no alternate vehicular path such as dead end frontage roads.

The M9-9 hazard marker is used to mark extreme hazards located within the roadway, such as transitions from two-way roadways to divided roadways or at T intersections.

The M9-10 off-mainline reference marker is used for locating devices or events occurring on off-mainline roadways.

The M9-11 guardrail tab is used to delineate guardrail posts. It is placed at 37½'± intervals along the line of the guardrail and only for the approach direction.

NO SCALE

ARIZONA HIGHWAY DEPARTMENT Traffic Design Division			Rev. 7-1-72
DELINEATOR USAGE			
Drawn	WCA	Drawing No.	
Traced	WCA		
Checked	RM		
Approved Traffic Engr.	Roger L. Hutton	C-9.01	

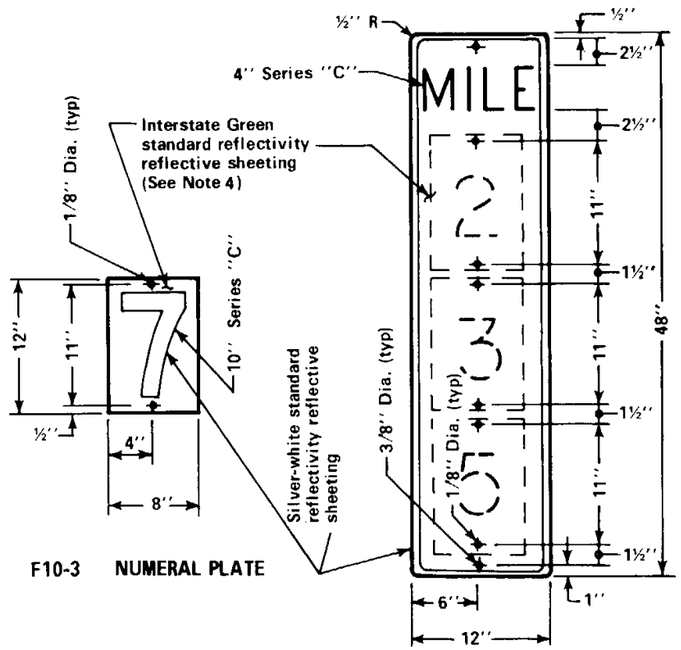

F10-3 NUMERAL PLATE

F 10-3

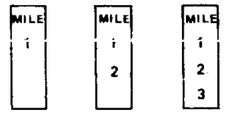

Standard Numeral position (See Note 4)

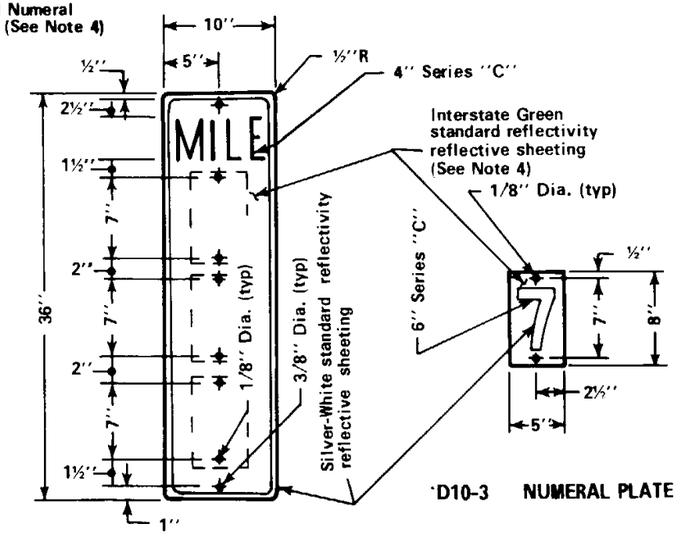

D10-3 NUMERAL PLATE

D10-3

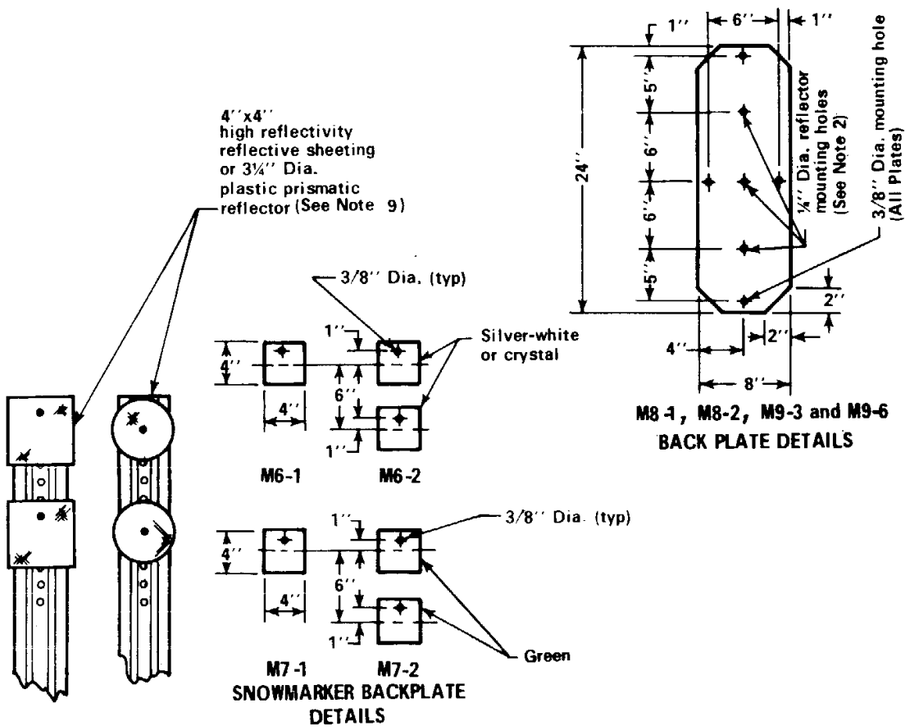

SNOWMARKER BACKPLATE DETAILS

M8-1, M8-2, M9-3 and M9-6 BACK PLATE DETAILS

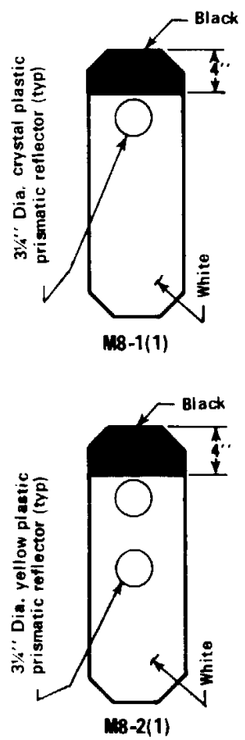

M8-1(1)

M8-2(1)

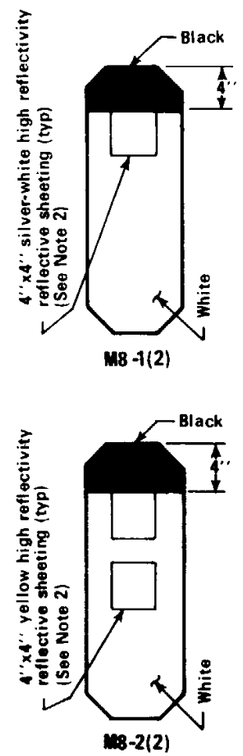

M8-1(2)

M8-2(2)

NOTES:

1. Metal plates shall be fabricated from either 16 gauge steel or from 3003 H16 aluminum alloy of 0.063" thickness. Metal plates shall be used as backplates for delineators, hazard markers mileposts, milepost numeral plates, striping markers and guardrail tabs. Metal plates shall be used as backplates for snow markers when the reflective sheeting type reflector is furnished. M9-1(R) and M9-1(L) plates may be fabricated from sign grade plywood.

2. Where backplates are furnished with the reflective sheeting type reflector, the reflector mounting holes shall not be provided.

3. Steel plates shall be prime coated on both sides with one coat of Paint Number 1-A or Paint Number 1-B. Aluminum plates shall be etched in accordance with Federal Specification TT-P-141b, Method 209.1, prime coated on both sides with one coat of Paint Number 1-D, then painted on both sides with Paint Number 16 (Industrial Synthetic Enamel). The paint shall be Class B. The color shall be white, black or Interstate green, as specified. Paint shall conform to the current edition of the Arizona Highway Department Standard Specifications. An approved equivalent specification may be used in fabricating steel and aluminum plates.

4. Single milepost numeral plates shall be mounted at the upper most position on the milepost backplates. Dual and triple milepost numeral plates shall be positioned vertically on the milepost backplates with the first numeral plate placed at the uppermost position, the second at the center position and the third at the lowest position. Numeral plates shall be secured to the milepost backplate by means of 1/8" Dia. x 1/2" long blind rivets.

5. Reflective devices shall be either plastic prismatic reflector or reflective sheeting, at the option of the contractor. Prismatic reflectors and reflective sheeting shall conform to the requirements of the Standard Specifications. Silver-white reflective sheeting shall be either standard reflectivity or high reflectivity as required. Yellow and green sheeting shall be high reflectivity. Red reflective sheeting shall be standard reflectivity. Prismatic reflectors shall be yellow, crystal, red or green as required.

Notes continued on C-9.02.2

NO SCALE

ARIZONA HIGHWAY DEPARTMENT Traffic Design Division		Rev. 7-1-72
PLATE DETAILS		
Drawn	DCO	Drawing No.
Traced	WCO	C-9.02.1
Checked	RM	
Approved Traffic Engr.	Roger L. Hatton	

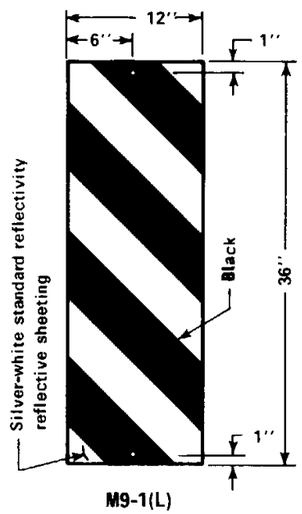

M9-1(L)

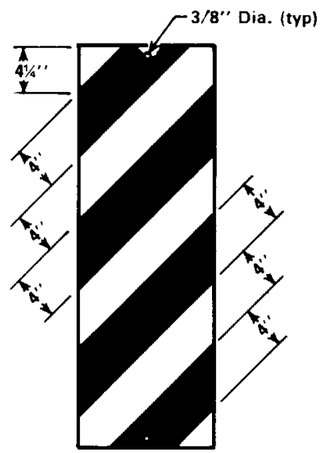

M9-1(R)

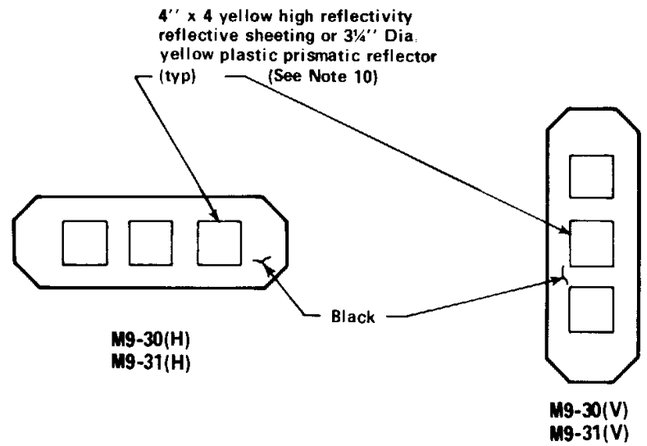

M9-30(H)
M9-31(H)

M9-30(V)
M9-31(V)

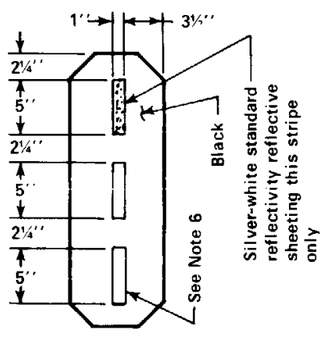

M9-6(1)

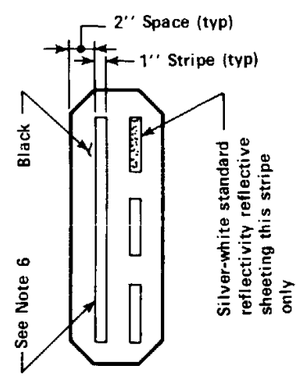

M9-6(2)

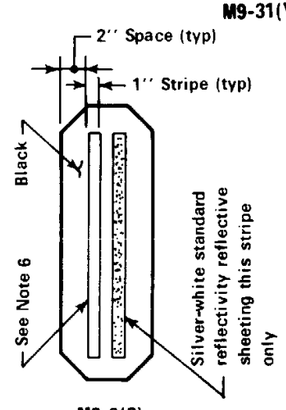

M9-6(3)

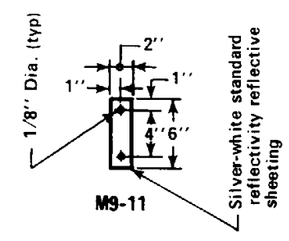

M9-11

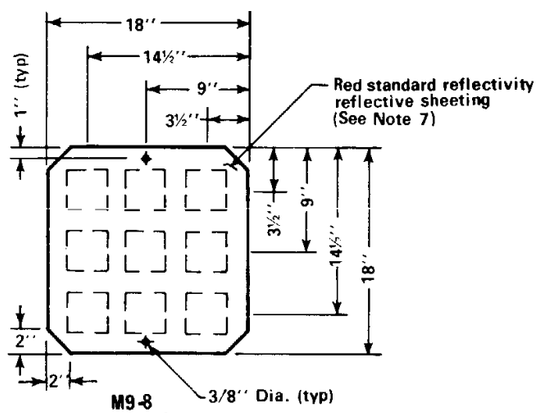

M9-8
M9-8(1)
M9-8(2)

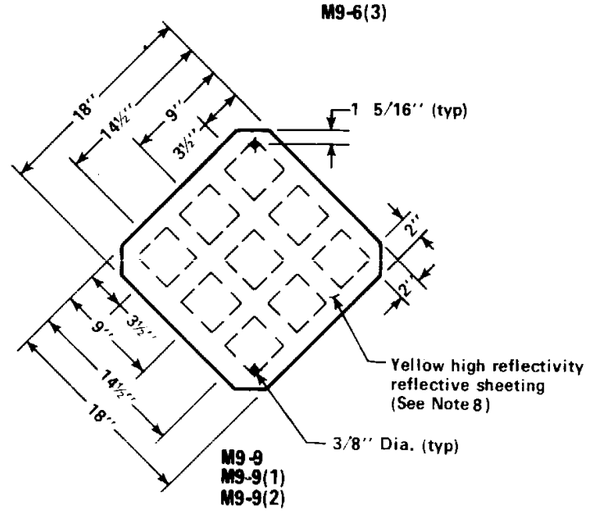

M9-9
M9-9(1)
M9-9(2)

6. Stripes for the M9-6(1), M9-6(2) and M9-6(3) marker shall be painted with industrial synthetic white enamel paint conforming to Federal Specification TT-E489C Class B or equal, except as otherwise indicated.

7. The Standard M9-8 is an 18" x 18" red reflectorized marker. The M9-8(1) has an 18" x 18" black opaque background with 9 - 3 1/4" diameter red plastic prismatic reflectors. The M9-8(2) has an 18" x 18" black opaque background with 9 - 4" x 4" red high reflectivity reflective sheeting reflectors.

8. The Standard M9-9 is an 18" x 18" all yellow reflectorized marker. The M9-9(1) has an 18" x 18" black opaque background with 9 - 3 1/4" diameter yellow plastic prismatic reflectors. The M9-9(2) has an 18" x 18" black opaque background with 9 - 4" x 4" yellow high reflectivity black reflective sheeting reflectors.

9. The Standard M6 and M7 snow markers may be 4" x 4" metal plates surfaced with high reflectivity reflective sheeting or they may be 3 1/4" diameter plastic prismatic reflectors mounted without back plates.

10. The M9-30(H) and M9-30(V) hazard markers have 3 yellow high reflectivity reflective sheeting reflectors. The M9-31(H) and M9-31(V) hazard markers have 3 yellow prismatic reflectors.

NO SCALE

ARIZONA HIGHWAY DEPARTMENT Traffic Design Division			Rev. 7-1-72
PLATE DETAILS			
Drawn	WCQ	Drawing No.	
Traced	WCQ		
Checked	RM	C-9.02.2	
Approved Traffic Engr.	Roger L. Hutton		

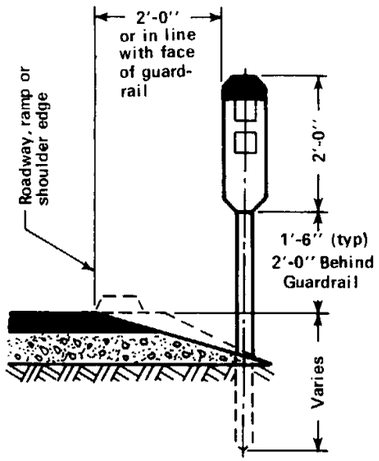

M8-1 and M8-2 DELINEATORS

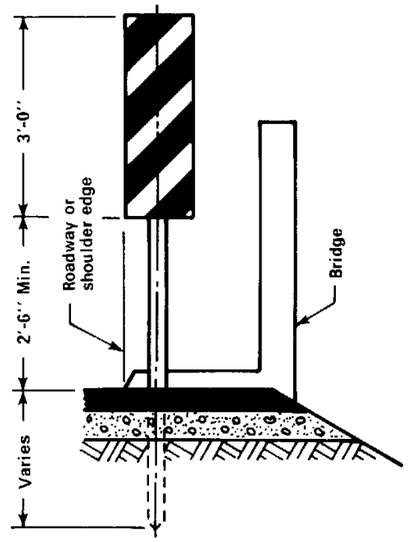

M9-1 HAZARD MARKER

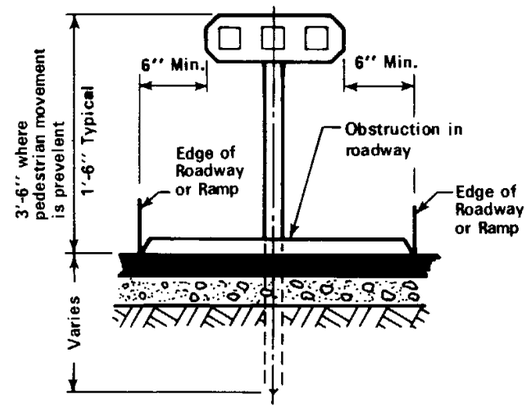

M9-30(H) and M9-31(H) HAZARD MARKER

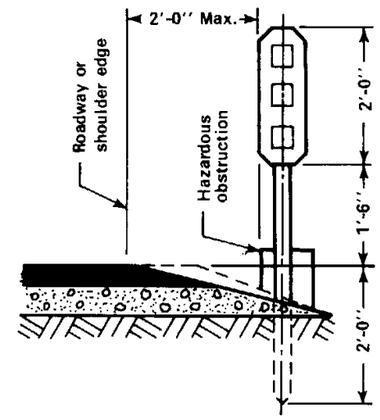

M9-30(V) and M9-31(V) HAZARD MARKER

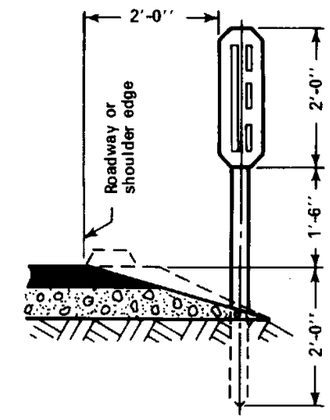

M9-6 STRIPING MARKER

NOTES:

1. The inside edge of M9-30(V) and M9-31(V), M9-1(L) and M9-1(R) hazard markers is placed in line with the inside edge of the obstruction.

2. The M9-11 guardrail tab is installed at 37 1/2' ± increments along the line of guardrail. The first tab for each installation shall be placed on the first post. The M9-11 tab is placed only on the approach side of the guardrail post.

3. Where the M9-30(H) or M9-31(H) hazard marker is required for an obstruction less than 3' - 0" wide the M9-30(H) or M9-31(H) back plate may be provided in a size smaller than standard; however, reflector sizes shall remain standard.

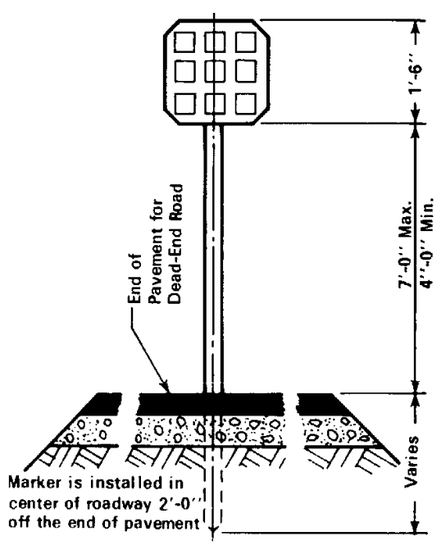

M9-8, M9-8(1) and M9-8(2)
DEADEND MARKER

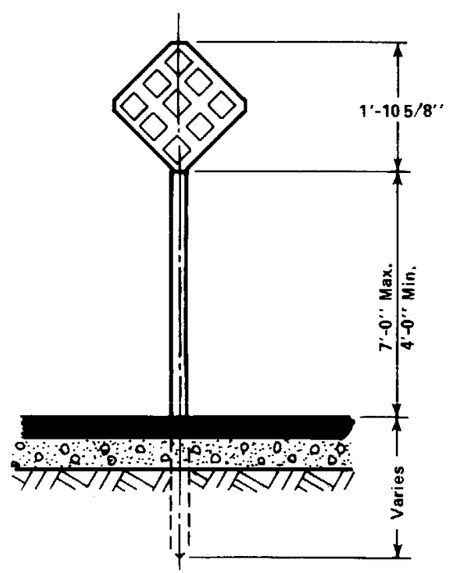

M9-9, M9-9(1) and M9-9(2)
HAZARD MARKER

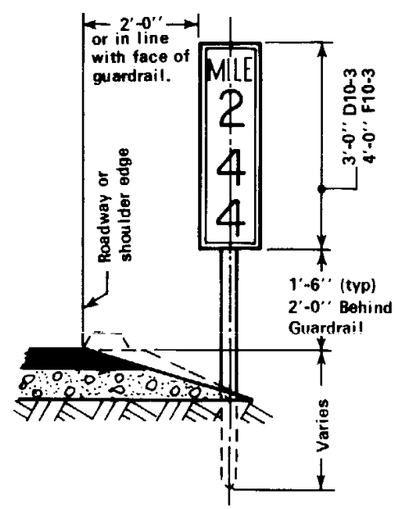

F10-3 & D10-3 MILEPOSTS

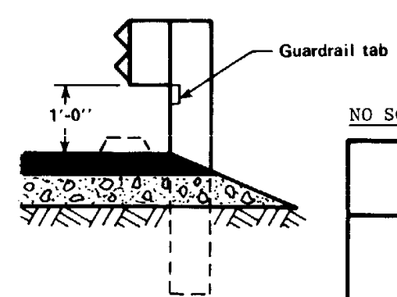

M9-11 GUARDRAIL MARKER

NO SCALE

ARIZONA HIGHWAY DEPARTMENT Traffic Design Division		Rev. 7-1-72
TYPICAL PLACEMENT DETAILS		
Drawn		Drawing No.
Traced		C-9.03
Checked		
Approved Traffic Engr.	Roger L. Hatton	

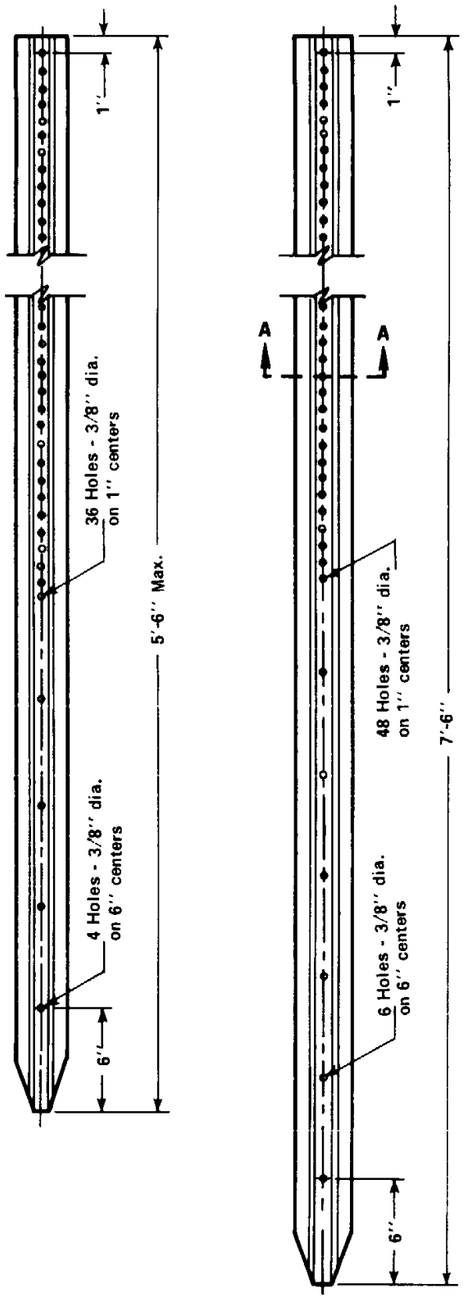

STEEL POSTS

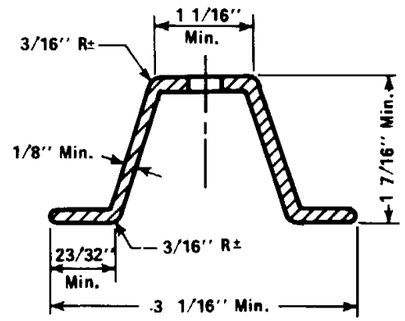

CROSS SECTION A-A

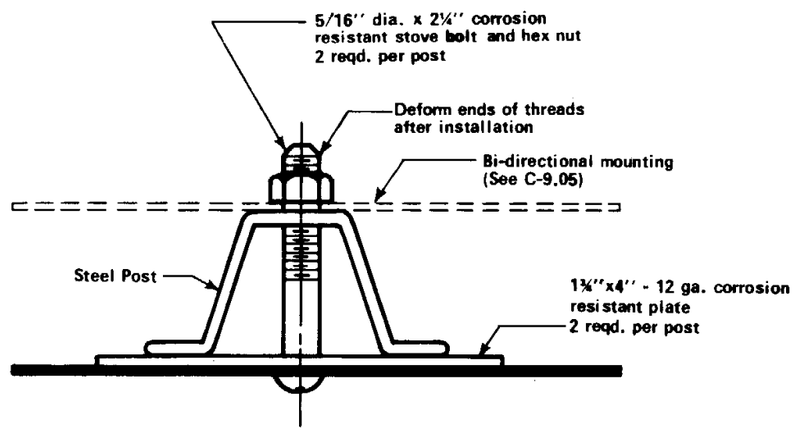

TYPICAL MOUNTING DETAIL

NOTE:

Steel posts shall conform to ASTM-A-4 and shall not weigh less than 1.9 lbs. per foot and shall be galvanized to conform to ASTM-A-123.

NO SCALE

ARIZONA HIGHWAY DEPARTMENT Traffic Design Division		Rev. 7-1-72
DELINEATOR POST AND MOUNTING DETAILS		
Drawn	WRA	Drawing No. C-9.04
Traced	WRA	
Checked	EA	
Approved Traffic Engr.	Roger L. Walton	

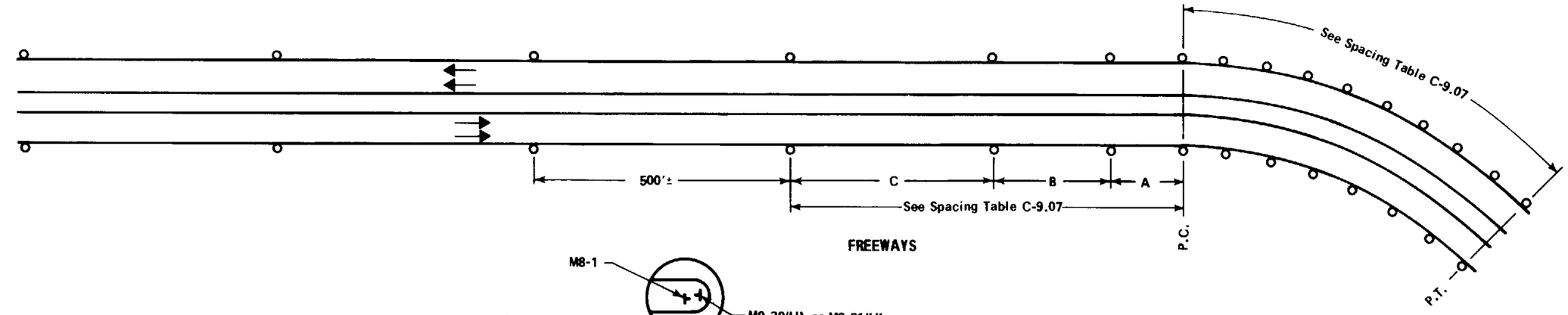

FREEWAYS

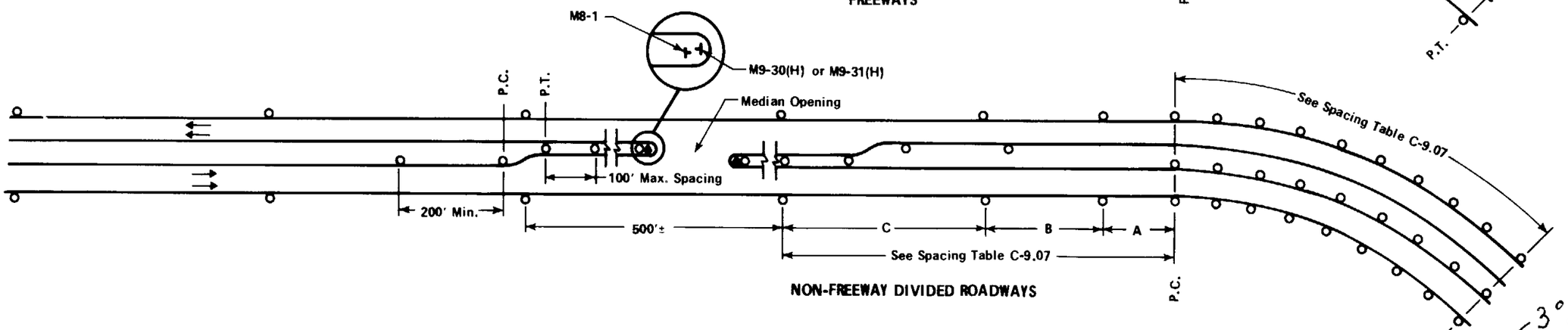

NON-FREEWAY DIVIDED ROADWAYS

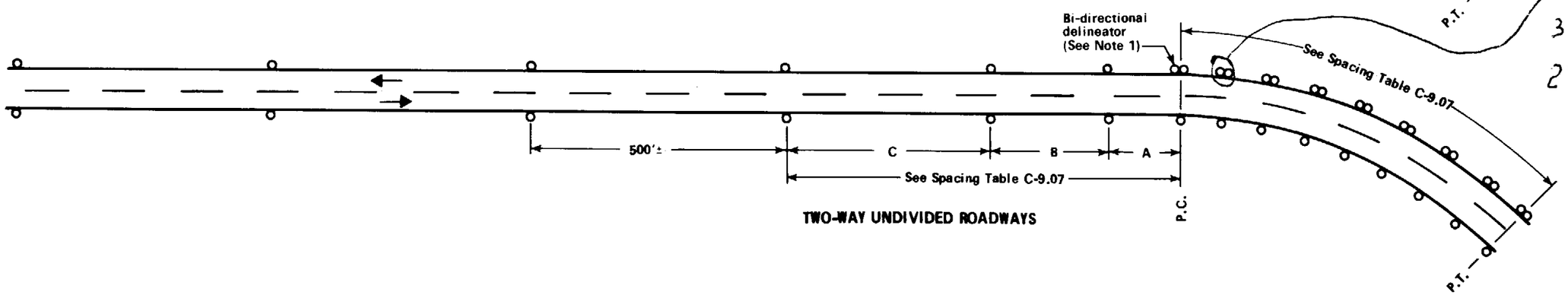

TWO-WAY UNDIVIDED ROADWAYS

3° or < — Use
3° to 2° — ?
2° or > — Don't U

NOTES:

1. M8-1 delineators are placed on the left side at sharp right-hand curve as deemed necessary by the Traffic Engineer. Delineators are bi-directional, visible from opposite directions, only on two-way undivided roadways.

2. The M8-1 and M9-30(H) or M9-31(H) markers at median openings with left-turn lanes may be mounted together on a single post when the median width is 4' - 0" or less.

Legend

○ M8-1

◆ M9-30(H) or M9-31(H)

NO SCALE

ARIZONA HIGHWAY DEPARTMENT
Traffic Design Division

Rev. 7-1-72

MAINLINE DELINEATOR SPACING

Drawn	WCA	Drawing No.
Traced	WCA	
Checked	KA	
Approved Traffic Engr.	Roger L. Hatton	C-9.05

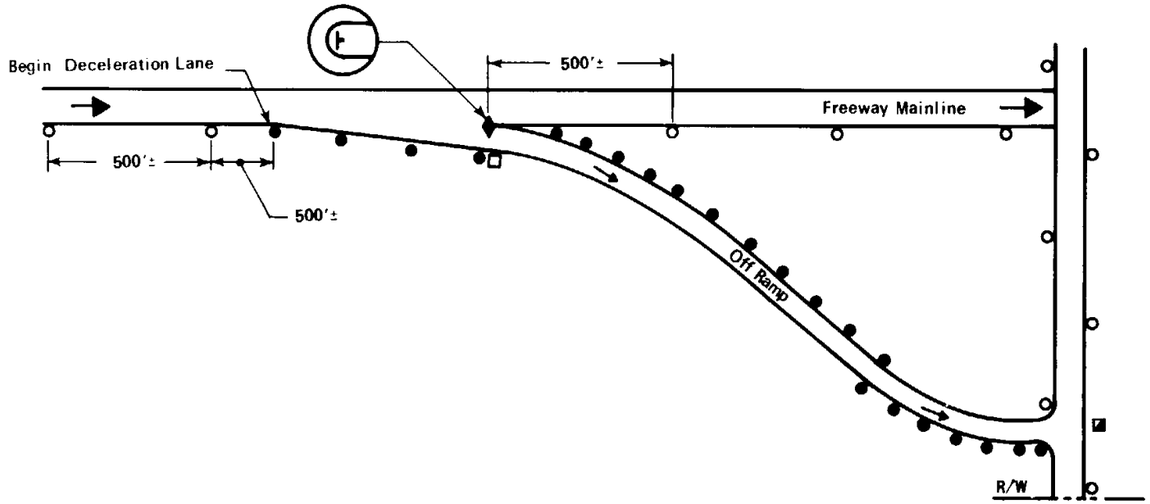

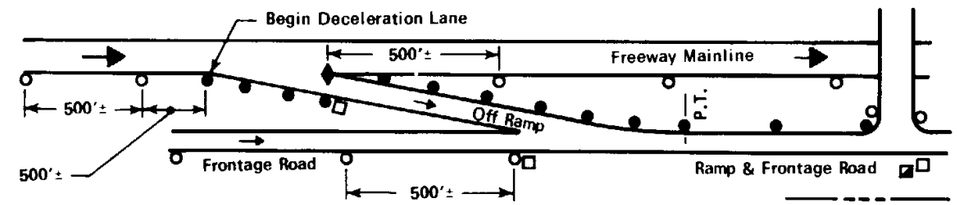

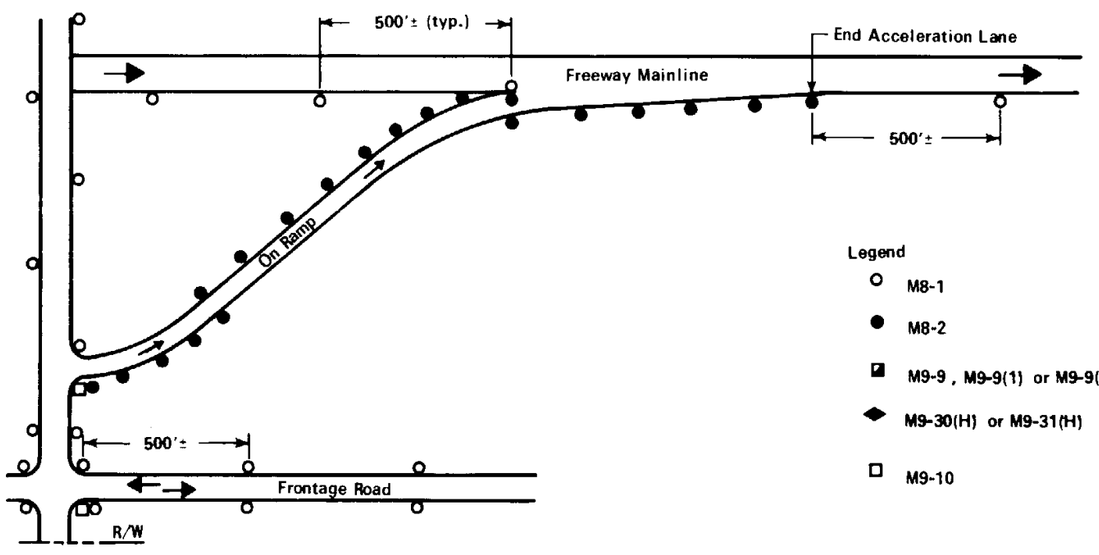

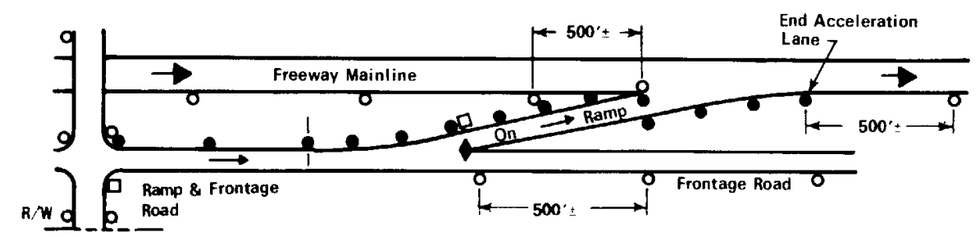

Legend

- M8-1
- M8-2
- M9-9 , M9-9(1) or M9-9(2)
- M9-30(H) or M9-31(H)
- M9-10

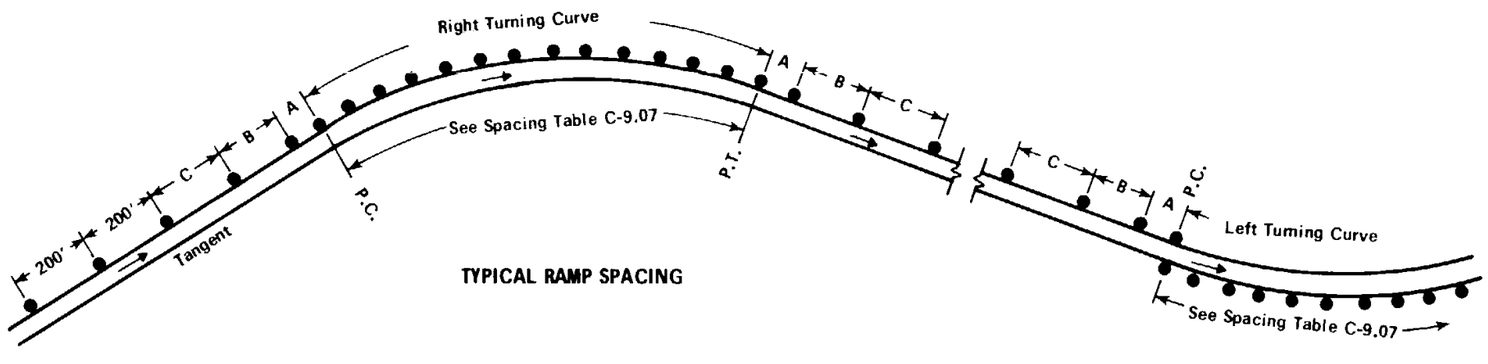

TYPICAL RAMP SPACING

NO SCALE

ARIZONA HIGHWAY DEPARTMENT Traffic Design Division		Rev. 7-1-72
INTERCHANGE DELINEATOR SPACING		
Drawn	WCG	Drawing No. C-9.06
Traced	WCG	
Checked	RM	
Approved Traffic Engr.	Roger L. Hatton	

SPACING TABLE

Degree of Curve	Spacing on Curve in Feet (S)	Space in Advance and Beyond Curve in Feet		
		A	B	C
0°-0' to 0°-30'	500	500	500	500
0°-45'	450	500	500	500
1°-0'	400	500	500	500
1°-15'	350	500	500	500
1°-30'	300	500	500	500
1°-45'	250	450	500	500
2°-0'	200	360	500	500
3°-0' to 5°-0'	150	270	450	500
6°-0' to 10°-0'	100	180	300	500
11°-0' to 17°-0'	75	135	225	450
18°-0' to 34°-0'	50	90	150	300
35°-0' and Greater	25	45	75	150

Important: Maximum spacing for ramp delineation is 200 feet (broken line). Maximum through-lane spacing is 528 feet. Necessary field adjustments in spacing shall be made by the Engineer.

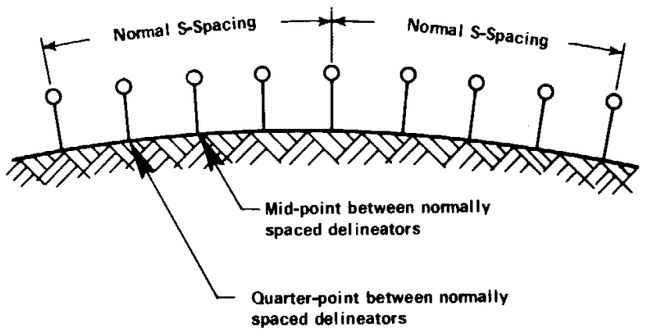

SPACING PROCEDURE FOR HORIZONTAL AND (CREST) VERTICAL CURVES (VERTICAL CURVE SHOWN)

NOTE:
There shall be a minimum of 3 delineators continuously visible on horizontal curves and the crest of vertical curves. When 3 delineators are not visible, install additional delineators at the midpoints between the normally spaced delineators. If 3 delineators are still not visible, install additional delineators at the quarter points or smaller even increments between the normally spaced delineators until 3 delineators become continuously visible.

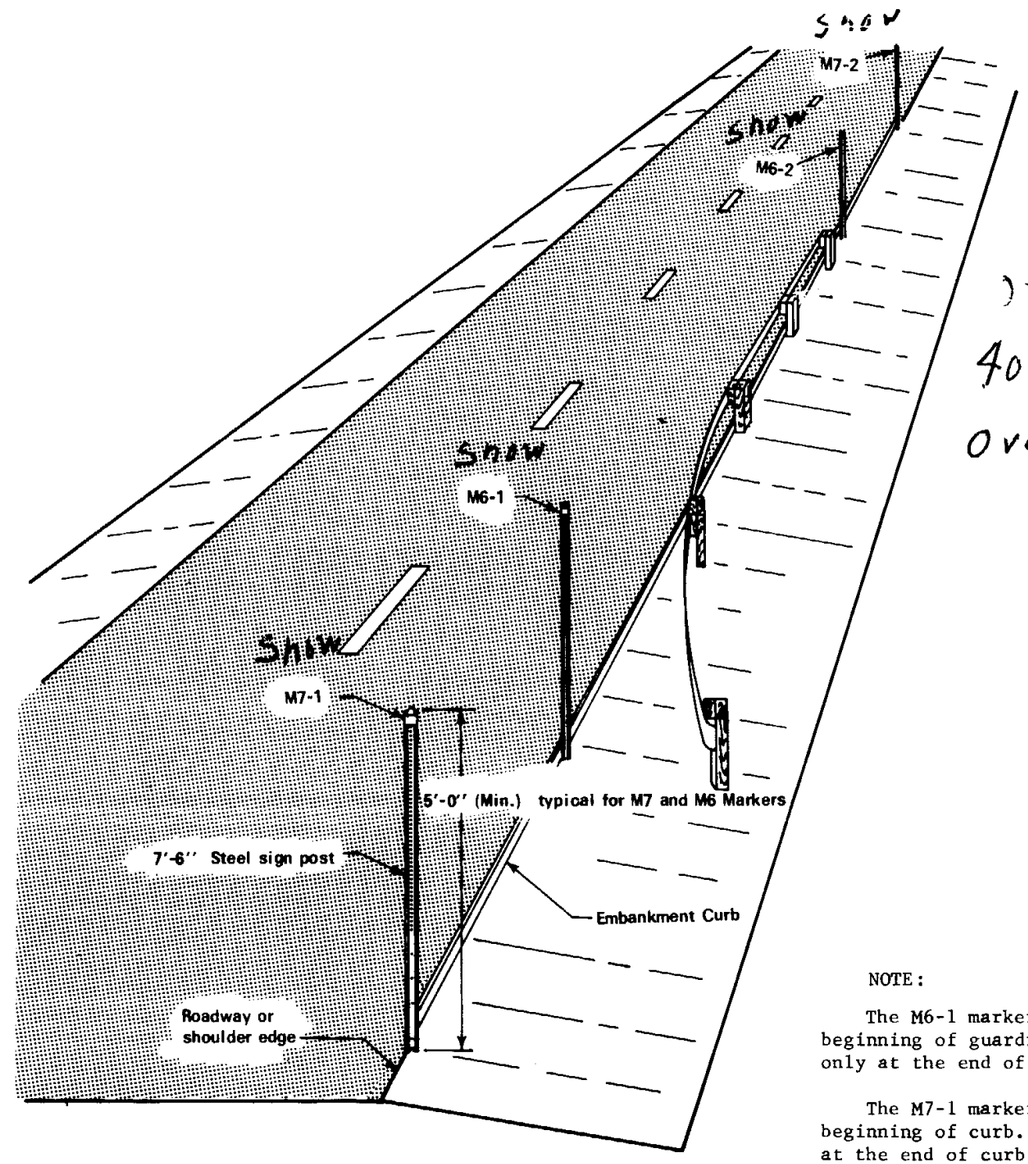

Snow Removal Elev.

) to 4000' - No

4000' to 5000' - ? Check with Dist

Over 5000' - yes

NOTE:

The M6-1 marker is used only at the beginning of guardrail. The M6-2 is used only at the end of guardrail.

The M7-1 marker is used only at the beginning of curb. The M7-2 is used only at the end of curb.

NO SCALE

ARIZONA HIGHWAY DEPARTMENT Traffic Design Division		Rev. 7-1-72
DELINEATOR SPACING TABLE AND SNOW MARKER PLACEMENT		
Drawn	WCO	Drawing No.
Traced	WCO	C-9.07
Checked	RM	
Approved Traffic Engr.	Roger L. Hatton	

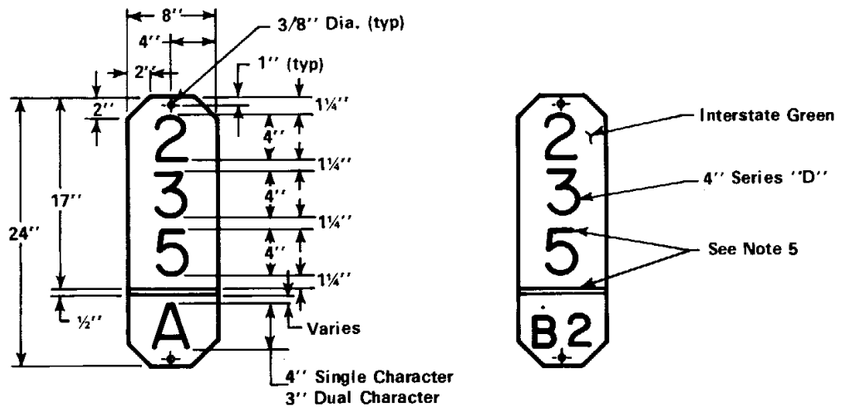

M9-10

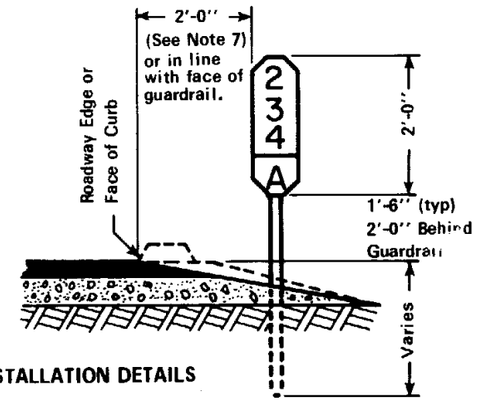

INSTALLATION DETAILS

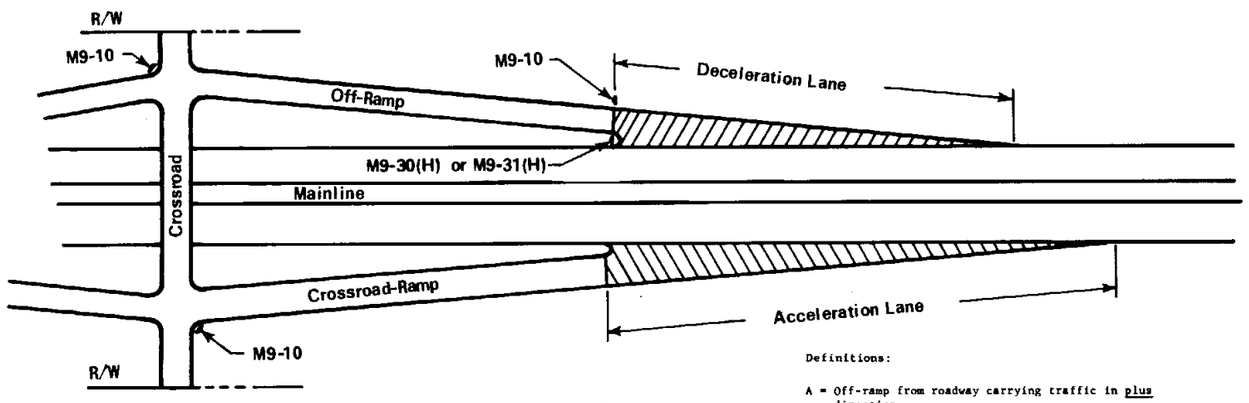

INTERCHANGE DETAILS

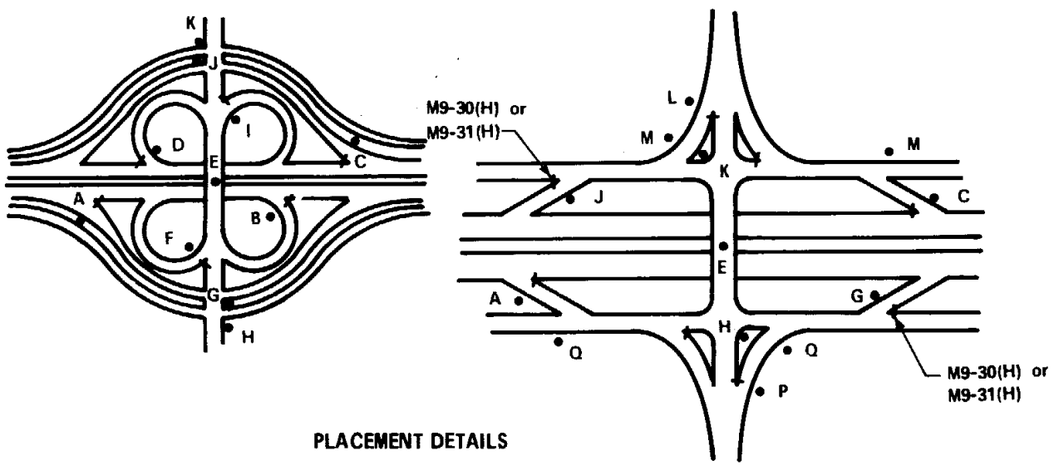

PLACEMENT DETAILS

Definitions:

A = Off-ramp from roadway carrying traffic in plus direction

B = Off-loop from roadway carrying traffic in plus direction

C = Off-ramp from roadway carrying traffic in minus direction

D = Off-loop from roadway carrying traffic in minus direction

E = Intersection of X-road with ℄ of trafficway

F = X-road loop to roadway carrying traffic in plus direction

G = X-road ramp to roadway carrying traffic in plus direction

H = Frontage road adjacent to roadway carrying traffic in plus direction

I = X-road loop to roadway carrying traffic in minus direction

J = X-road ramp to roadway carrying traffic in minus direction

K = Frontage road adjacent to roadway carrying traffic in minus direction

L = Connector from X-road to frontage road or ramp in a minus direction

M = Intermediate point denoting the terminus of L or K in a minus direction

P = Connector from X-road to frontage road or ramp in a plus direction

Q = Intermediate point denoting the terminus of P or H in a plus direction

NOTES:

1. Off-mainline reference markers installed on crossroad ramps shall be located as close as practicable to the crossroad and oriented such that they can be read from either direction on the crossroad and, where possible, the off-ramp.

2. For off-ramps, loop-ramps and crossroad loops the off-mainline reference marker shall be located on the right side of the ramp or loop and directly across from the M9-30(H) or M9-31(H) hazard marker.

3. Where crossroad ramps divert from frontage roads, the off-mainline reference marker shall be located on the left side of the ramp, directly across from the M9-30(H) or M9-31(H) hazard marker.

4. Where two interchange crossroads or other duplicated conditions are located within a single mile reference, as described in the current edition of the Log of the State Highway System, the last line of the off-mainline reference marker shall carry two characters. The first character is a letter which describes the type of location within the interchange. The second character is a number which describes the sequence (in an increasing milepost direction) of the duplicated condition such as on-or off-ramp, etc.

5. Reflective sheeting for the characters and divider on the off-mainline reference marker shall be silver-white in color and shall conform to the current edition of the Arizona Highway Department Standard Specifications for Road and Bridge Construction.

6. Off-mainline reference markers shall not be installed for the "E" location at the intersection of the crossroad and mainline.

7. Where a delineator and an off-mainline reference marker are required at a single location, omit the delineator. Markers installed at off-ramp gore point shall be oriented parallel to the roadway.

8. Where an off-ramp (slip type) has little or no length from the mainline to where it merges with the frontage road, a reference marker should be placed at the merging point on the frontage road which will serve as the beginning point for the combination ramp/frontage road to its intersection with the crossroad.

   Slip type on-ramp having little or no length will not be referenced but will be identified with its frontage road reference marker.

9. Situations not covered by these standards shall be as prescribed by the Traffic Engineering Design Division or the Safety Projects Division. Where the presence of a structure or unusual terrain prevent the placement of a marker as directed, the installer may use his own judgment in placing it where it will be most effective. He may also make back-to-back installations of a marker if it will improve its usefulness.

NO SCALE

ARIZONA HIGHWAY DEPARTMENT Traffic Design Division			Rev. 7-1-72
PLATE AND INSTALLATION DETAILS FOR OFF-MAINLINE REFER. MARKER			
Drawn	WCA	Drawing No.	
Traced	WCA		
Checked	EA	C-9.08	
Approved Traffic Engr.	Roger L. Walton		

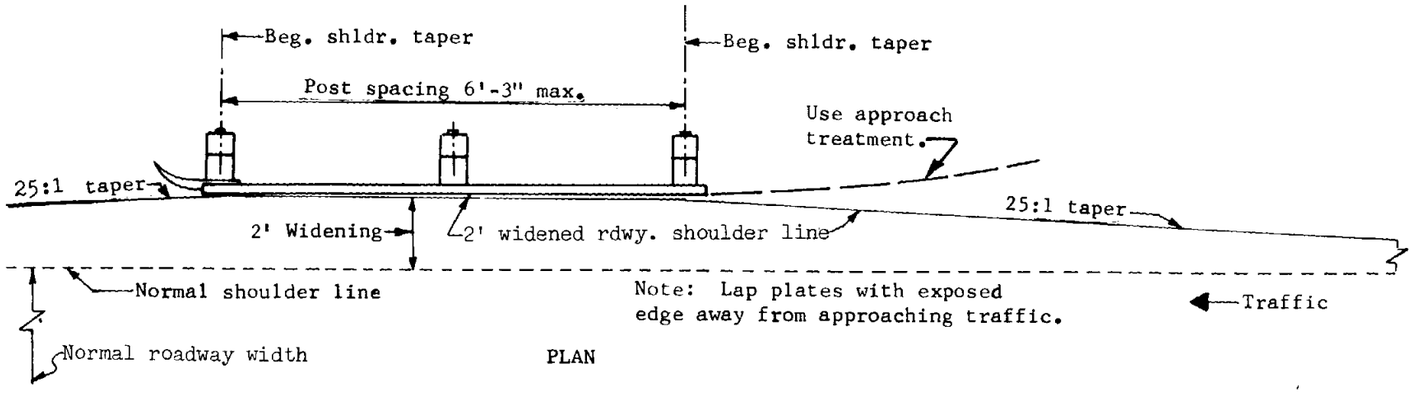

PLAN

GENERAL NOTES

Posts and blocks shall be nominal 8" X 8" rough, pressure treated and unpainted. Holes shall be bored before treatment.

All guard rail plate, fittings, hardware, etc. shall be galvanized.

Type A) Installation on normal shoulder line.

Type B) Installation on 2' widened roadway shoulder line.

Type "B" installation shown. Type "A" installation same except that inside face of guard rail coincides with normal shoulder line.

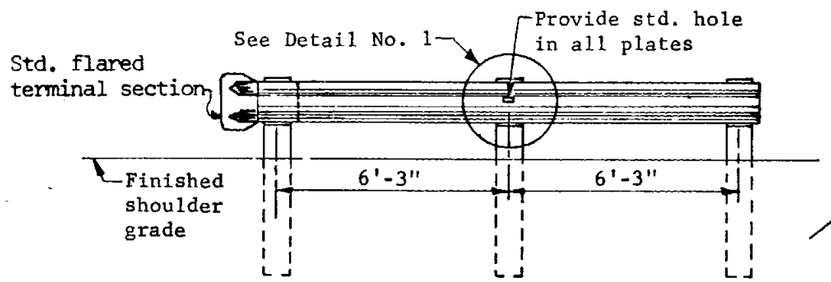

FACE ELEVATION

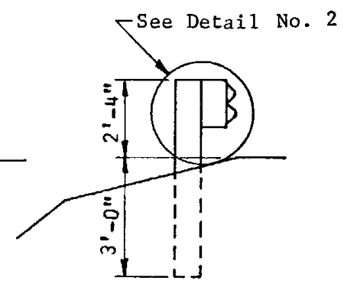

SIDE ELEVATION

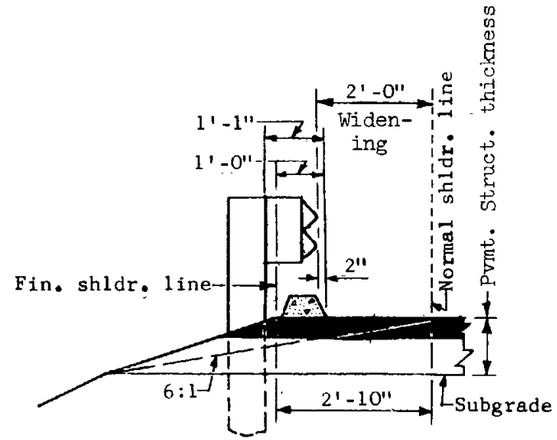

Installation of Guard Rail in embankment curb sections.

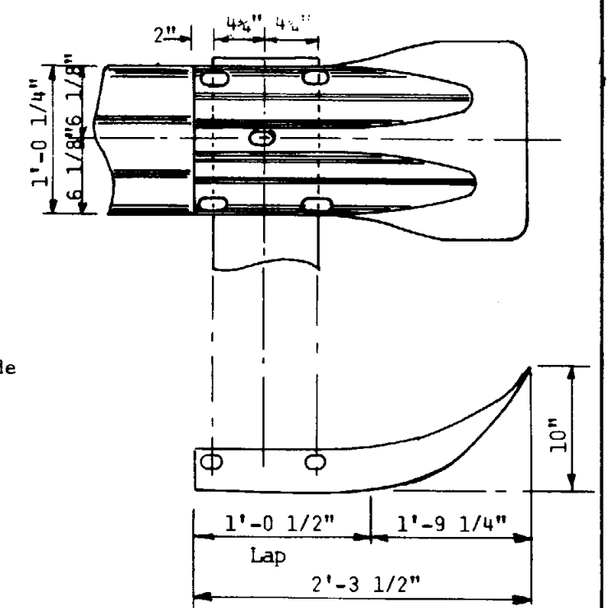

STANDARD FLARED TERMINAL SECTION

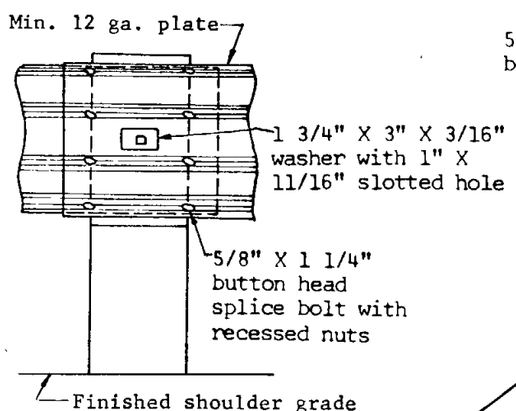

DETAIL NO. 1

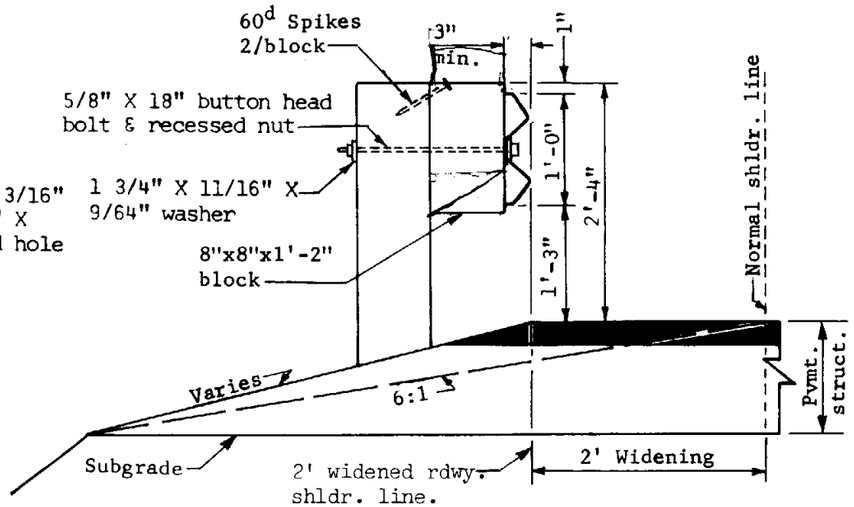

DETAIL NO. 2

ARIZONA HIGHWAY DEPARTMENT
CONSTRUCTION SECTION

GUARD RAIL - STEEL

SINGLE FACE DETAILS

Drawn	D.G.	Drawing No.
Traced		C-10.01
Checked	R.W.	
Approved Asst. State Eng Cons		

Rev
5/72
2/73
4/73

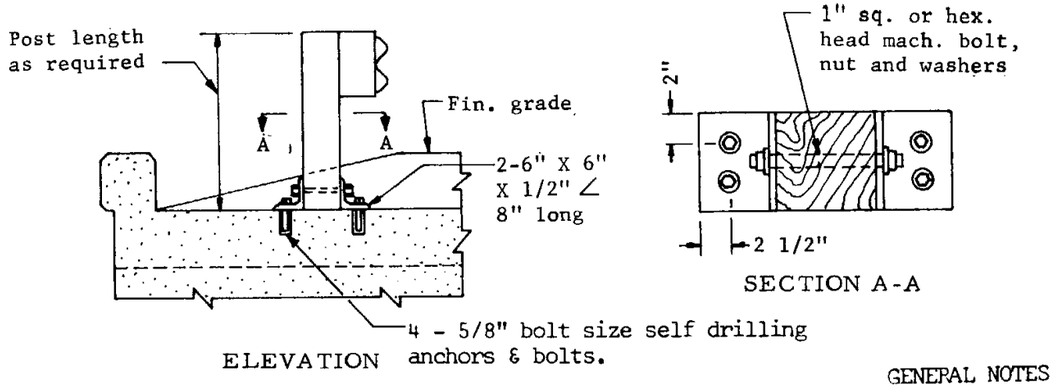

DETAIL NO. 1 - GUARD RAIL POST INSTALLATION ON STRUCTURES

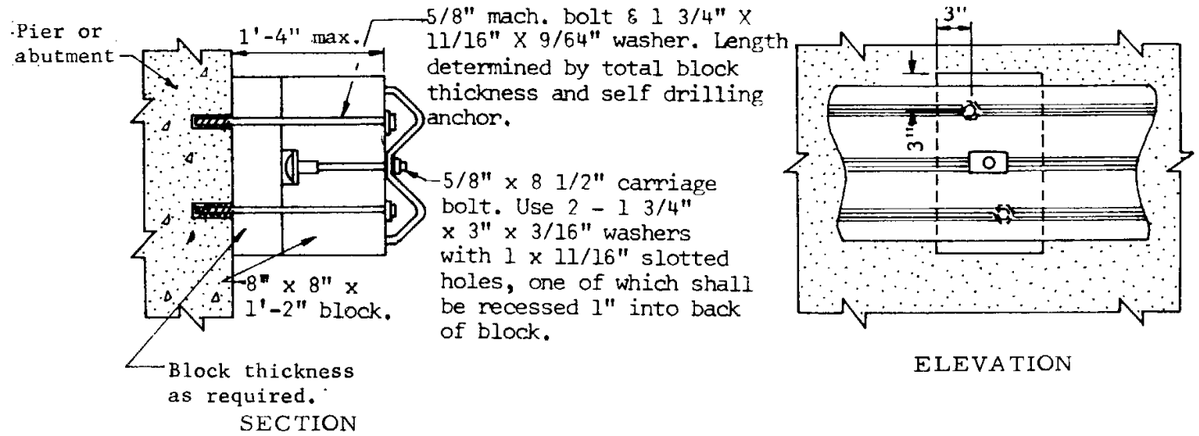

DETAIL NO. 3 - ATTACHMENT OF GUARD RAIL TO STRUCTURES

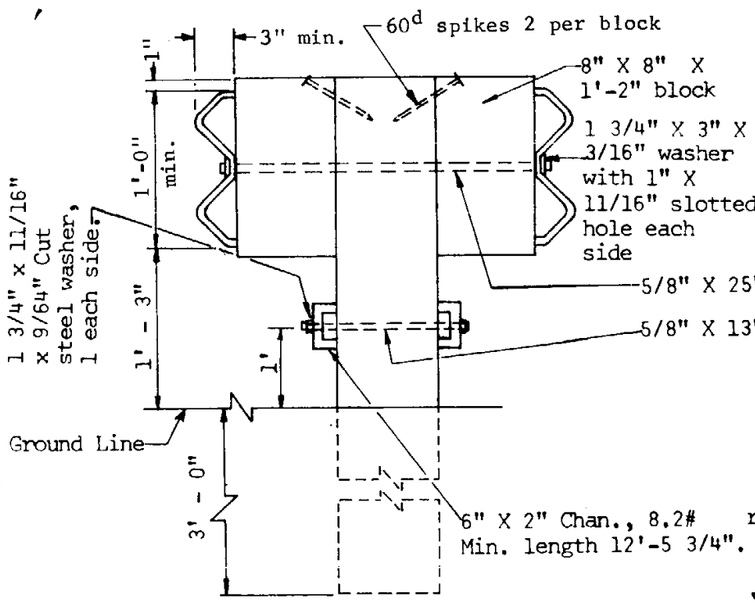

DETAIL NO. 2 - MEDIAN BARRIER

GENERAL NOTES

For other applicable rail details, see Std. C-10.01.

Top and rub rail bolts shall not project more than 1". If adjustment shortening is required, threads shall be left in functional condition.

5/8" bolt size self drilling anchor shall have a min. 1500# pull out strength in 2500 p.s.i. concrete in accordance with manufacturer's specifications.

Horizontal distance between top rail and median curb shall not exceed 1'.

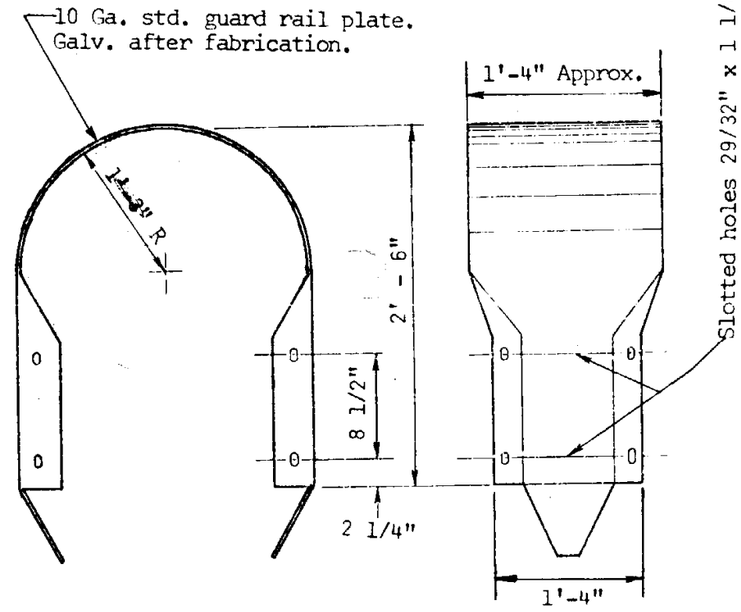

DETAIL NO. 4 - BUFFER END SECTION

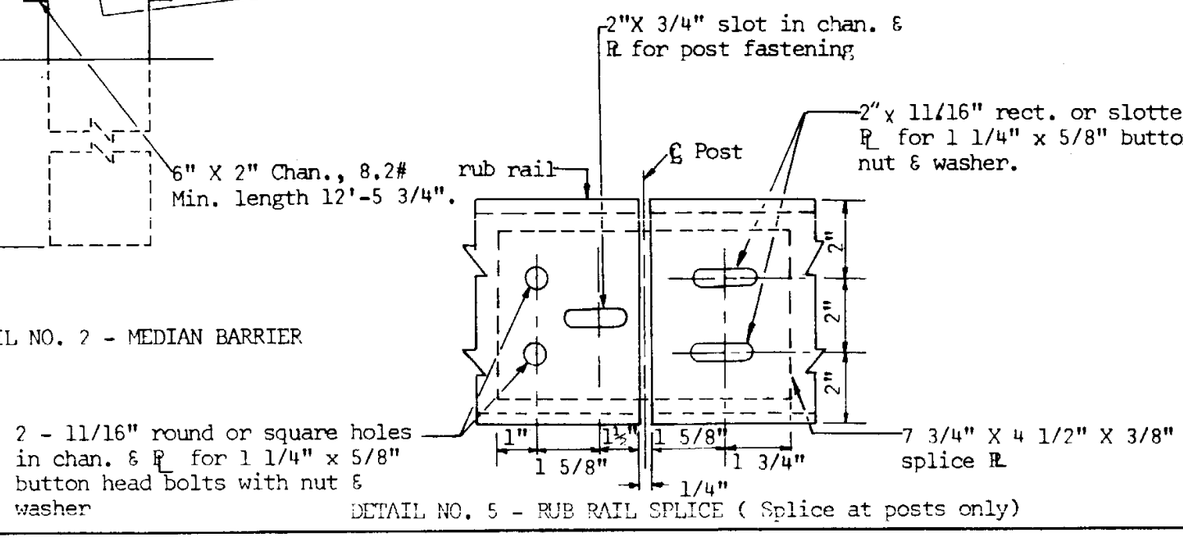

DETAIL NO. 5 - RUB RAIL SPLICE (Splice at posts only)

ARIZONA HIGHWAY DEPARTMENT CONSTRUCTION SECTION		Rev 5/72 2/73
GUARD RAIL - STEEL MISCELLANEOUS DETAILS		
Drawn	J.A.W.	Drawing No.
Traced		C-10.02
Checked	R.W.	
Approved Asst. State Eng Const.		

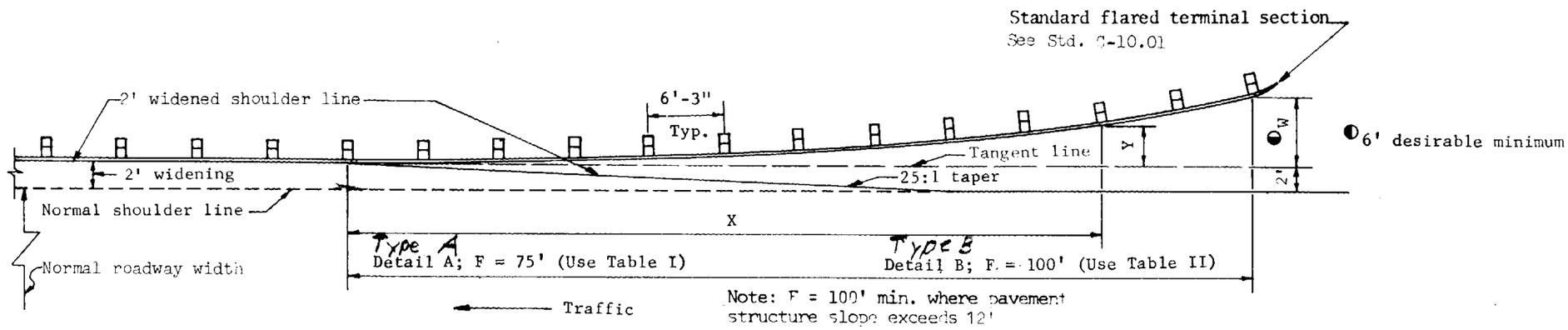

TABLE I

X	Y (Feet)			
	W			
	3'-0"	4'-0"	5'-0"	6'-0"
12'-6"	0.08	0.11	0.14	0.17
25'-0"	0.33	0.44	0.55	0.67
37'-6"	0.75	1.00	1.25	1.50
50'-0"	1.33	1.78	2.22	2.67
62'-6"	2.08	2.78	3.42	4.11
75'-0"	3.00	4.00	5.00	6.00

TABLE II

X	Y (Feet)					
	W					
	5'-0"	6'-0"	7'-0"	8'-0"	9'-0"	10'-0"
12'-6"	0.08	0.09	0.11	0.12	0.14	0.16
25'-0"	0.31	0.37	0.44	0.50	0.56	0.62
37'-6"	0.70	0.84	0.99	1.13	1.27	1.41
50'-0"	1.25	1.50	1.75	2.00	2.25	2.50
62'-6"	1.90	2.28	2.66	3.01	3.42	3.91
75'-0"	2.81	3.39	3.94	4.50	5.06	5.62
87'-6"	3.81	4.57	5.34	6.10	6.86	7.66
100'-0"	5.00	6.00	7.00	8.00	9.00	10.00

GENERAL NOTES

When the value of W and/or F is different than values shown in the tables, use the formula to compute applicable Y values.

Where necessary, dimension F may be increased to provide better alignment and grade.

Type A) Installation on normal shoulder line.

Type B) Installation on 2' widened roadway shoulder line.

Type "B" installation shown. Type "A" installation same except that inside face of of guard rail coincides with normal shoulder line.

$Y = (W)X^2/F^2$ = Offset from Tangent line to guard rail.

W = Distance between Tangent line and desired location of end of guard rail.

F = Length of flared guard rail.

X = Distance from beginning of parabolic flare.

▭ indicates the preferred distance

ARIZONA HIGHWAY DEPARTMENT
CONSTRUCTION SECTION

GUARD RAIL-STEEL
APPROACH END TREATMENT

Drawn	D.G.	Drawing No.
Traced	S.L.T., D.G. 12-69	C-10.03
Checked	J.P.O.	
Approved Asst. State Eng Const	E. Kendall	

Rev
3-71
5/72
4/73

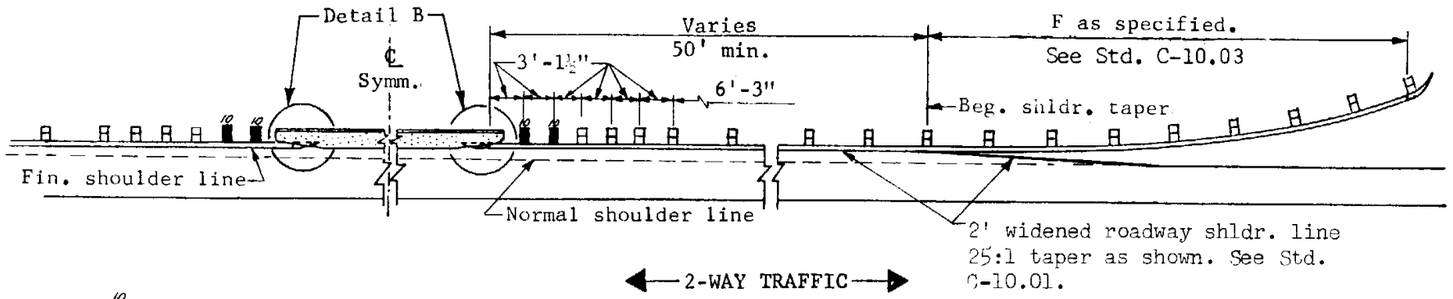

NOTE: ▮ Indicates 10"x10" post & block.

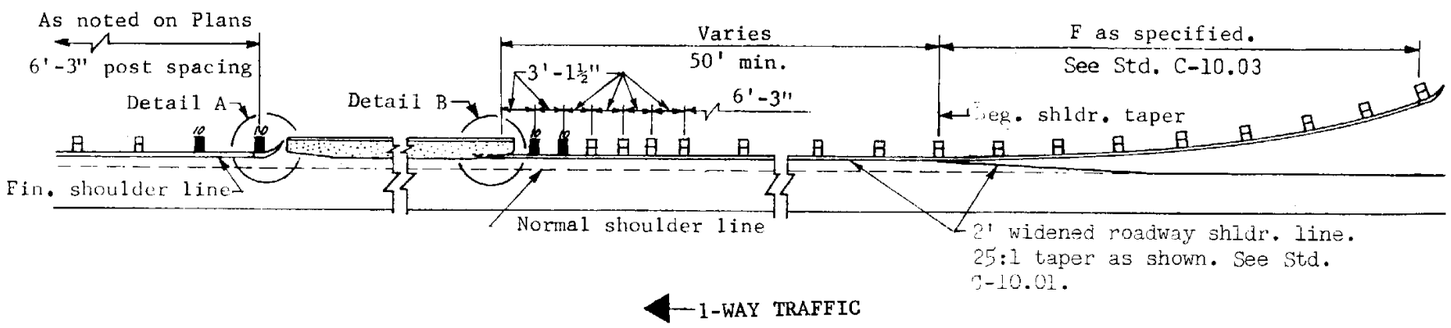

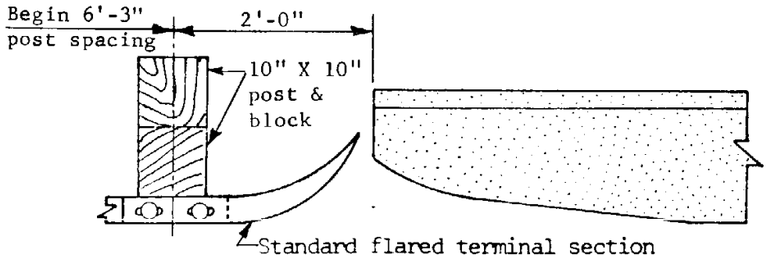

DETAIL A

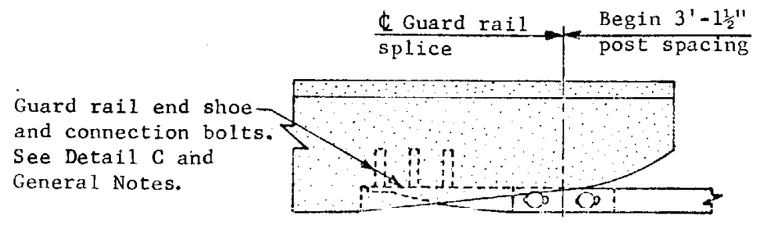

DETAIL B

GENERAL NOTES

Where necessary, dimension F may be increased to provide better alignment and grade.

Connect end shoe to dado with 4 - 7/8" high strength bolts with washers set in internally threaded tubular expansion anchors having an externally slit expansion element and a single cone expander. Tensile proof test load in 2500 p.s.i. concrete shall be 6500.lbs.

The guard rail end shoe shall be galvanized in accordance with A.S.T.M. specification A 123.

For construction details of guard rail attachment to bridge, see Plans.

Type A) Installation on normal shoulder line.

Type B) Installation on 2' widened roadway shoulder line.

Type "B" installation shown. Type "A" installation same except that inside face of guard rail coincides with normal shoulder line.

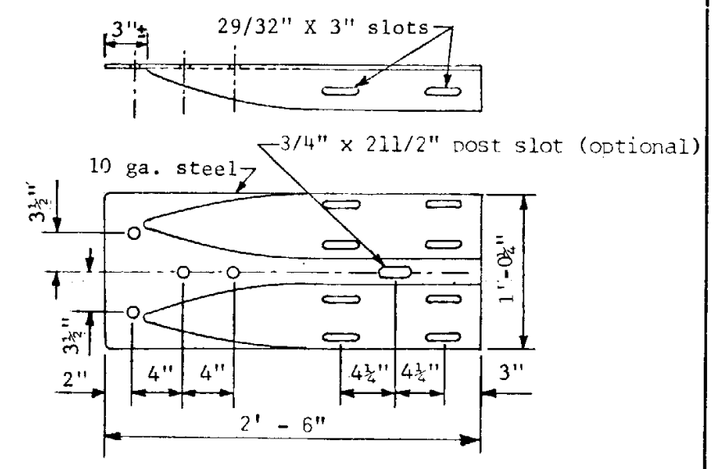

DETAIL C

ARIZONA HIGHWAY DEPARTMENT CONSTRUCTION SECTION			Rev 3-71 5/72 2/73 4/73
GUARD RAIL-STEEL **BRIDGE APPROACH DETAILS**			
Drawn	D.G.	Drawing No.	
Traced	S.L.T.,D.G. 12-69	C-10.04	
Checked	J.P.O.		
Approved Asst. State Eng Const.	E. Franklin		

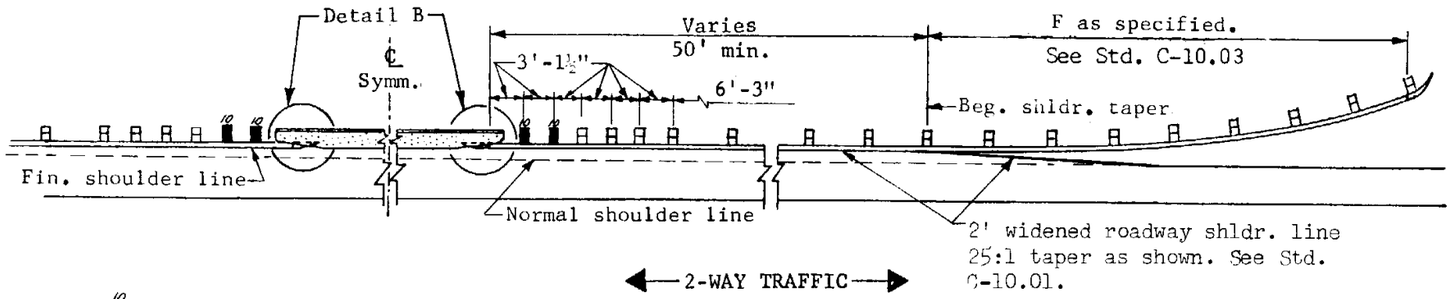

NOTE: ▮ Indicates 10"x10" post & block.

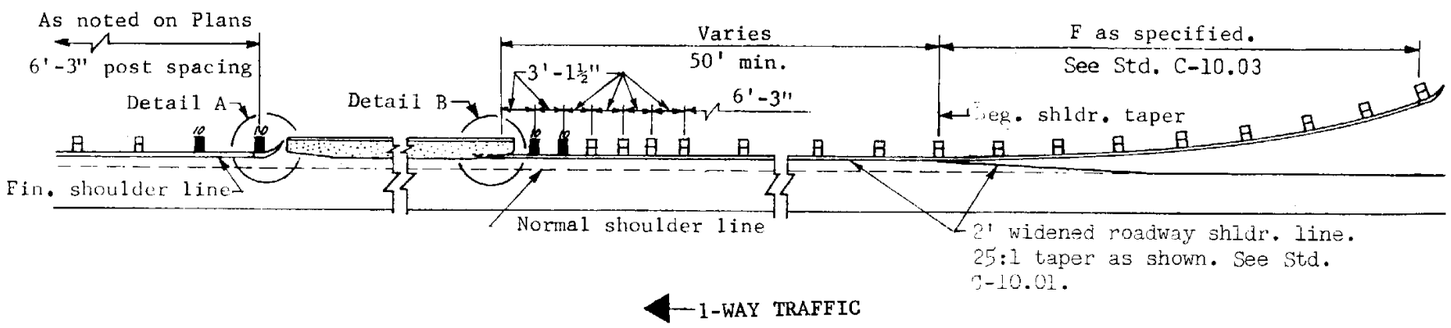

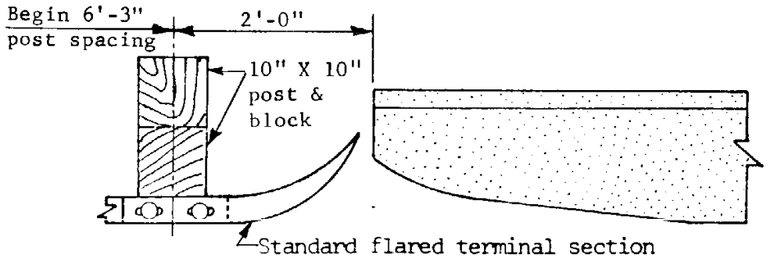

DETAIL A

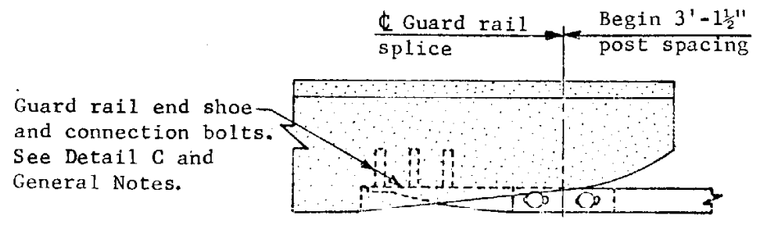

DETAIL B

GENERAL NOTES

Where necessary, dimension F may be increased to provide better alignment and grade.

Connect end shoe to dado with 4 - 7/8" high strength bolts with washers set in internally threaded tubular expansion anchors having an externally slit expansion element and a single cone expander. Tensile proof test load in 2500 p.s.i. concrete shall be 6500.lbs.

The guard rail end shoe shall be galvanized in accordance with A.S.T.M. specification A 123.

For construction details of guard rail attachment to bridge, see Plans.

Type A) Installation on normal shoulder line.

Type B) Installation on 2' widened roadway shoulder line.

Type "B" installation shown. Type "A" installation same except that inside face of guard rail coincides with normal shoulder line.

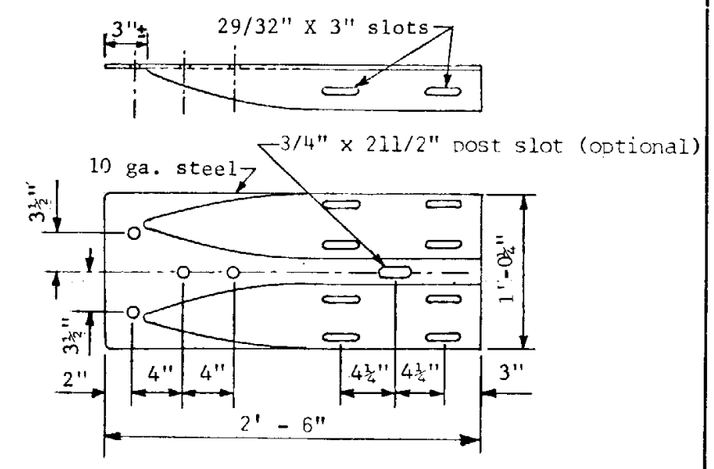

DETAIL C

ARIZONA HIGHWAY DEPARTMENT CONSTRUCTION SECTION			Rev 3-71 5/72 2/73 4/73
GUARD RAIL-STEEL **BRIDGE APPROACH DETAILS**			
Drawn	D.G.	Drawing No.	
Traced	S.L.T.,D.G. 12-69	C-10.04	
Checked	J.P.O.		
Approved Asst. State Eng Const.	E. Franklin		

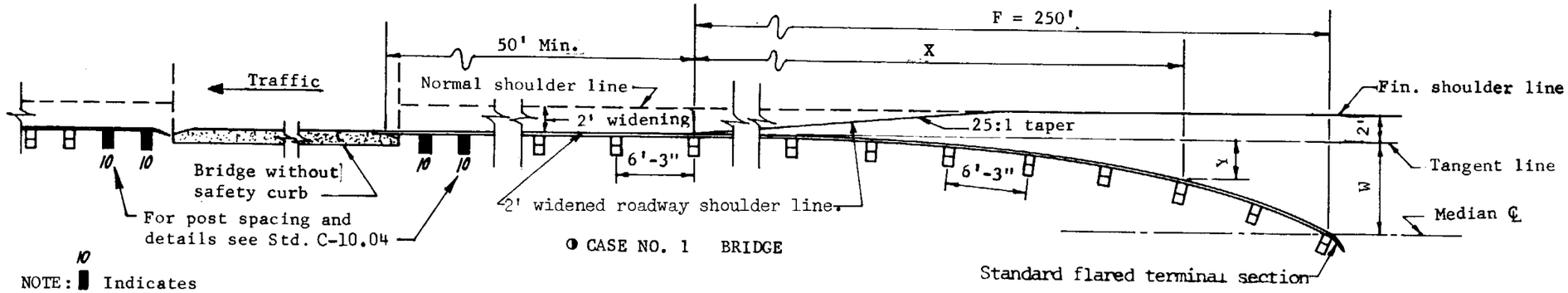

◑ CASE NO. 1 BRIDGE

NOTE: ▮ Indicates 10" x 10" post & block

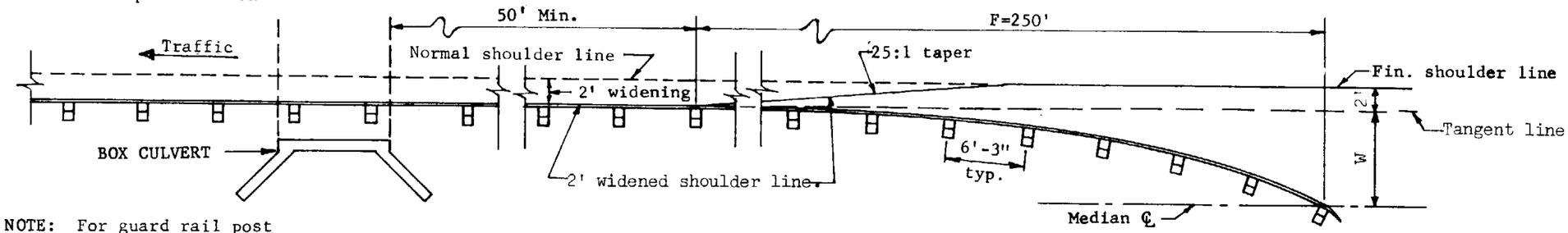

NOTE: For guard rail post installation on structures, see Std. C-10.02

◑ CASE NO. 2 BOX CULVERT

X	Y(Feet) W				
	26'	30'	34'	38'	42'
12'-6"	.065	.075	.085	.095	.105
25'-0"	.260	.300	.340	.38	.42
37'-6"	.585	.675	.765	.86	.95
50'-0"	1.040	1.200	1.360	1.52	1.68
62'-6"	1.625	1.875	2.125	2.38	2.63
75'-0"	2.340	2.700	3.060	3.42	3.78
87'-6"	3.185	3.675	4.165	4.66	5.15
100'-0"	4.16	4.800	5.440	6.08	6.72
112'-6"	5.265	6.075	6.885	7.70	8.51
125'-0"	6.500	7.500	8.500	9.50	10.50
137'-6"	7.865	9.075	10.285	11.50	12.71
150'-0"	9.360	10.800	12.240	13.68	15.12
162'-6"	10.985	12.675	14.365	16.06	17.75
175'-0"	12.740	14.700	16.660	18.62	20.58
187'-6"	14.625	16.875	19.125	21.38	23.63
200'-0"	16.640	19.200	21.760	24.32	26.88
212'-6"	18.785	21.675	24.565	27.46	30.35
225'-0"	21.060	24.300	27.540	30.78	34.02
237'-6"	23.465	27.075	30.685	34.28	37.88
250'-0"	26.00	30.00	34.00	38.00	42.00

◑ One way roadway shown. For two way roadway, use symm. guard rail flare and fixed dado attachment at trailing end of bridge.

$Y = (W)X^2/F^2$ = Offset from Tangent line to guard rail.
W = Distance between Tangent line and median center line.
F = Length of flared portion of guard rail.
X = Distance from beginning of parabolic flare to any 12'-6" multiple of parabolic flare.

GENERAL NOTES

When the value of W and/or F is different than values shown in the table, use the formula to compute the applicable Y values.

For construction details of guard rail attachment to bridge, see Std. C-10.04 and Plans.

Where necessary, dimension F may be increased to provide better alignment and grade.

Type A) Installation on normal shoulder line.

Type B) Installation on 2' widened roadway shoulder line.

Type "B" installation shown. Type "A" installation same except that inside face of guard rail coincides with normal shoulder line.

ARIZONA HIGHWAY DEPARTMENT
CONSTRUCTION SECTION

GUARD RAIL-STEEL
FLARE TO MEDIAN

Drawn	D.G.	Drawing No.
Traced	S.L.T., D.G. 12-69	C-10.05
Checked	J.P.O.	
Approved Asst. State Eng Const.	G. Scandlin	

Rev
3-71
5/72
2/73
4/73

* Min. Std. approach end treatment
** Std. median flare

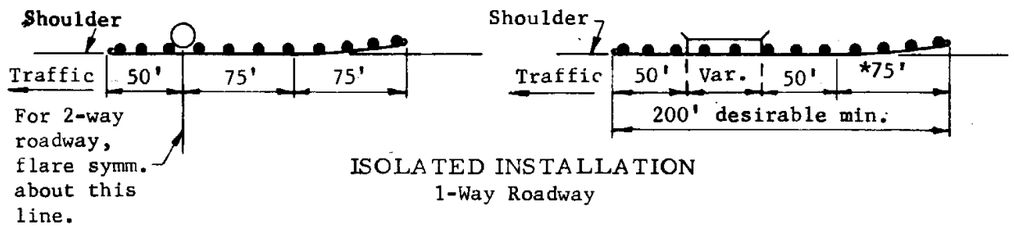

ISOLATED INSTALLATION
1-Way Roadway

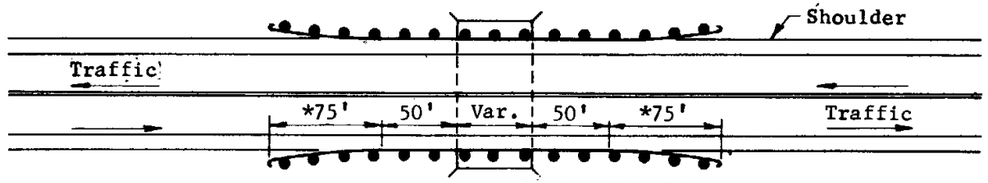

2-WAY ROADWAY OBSTRUCTION

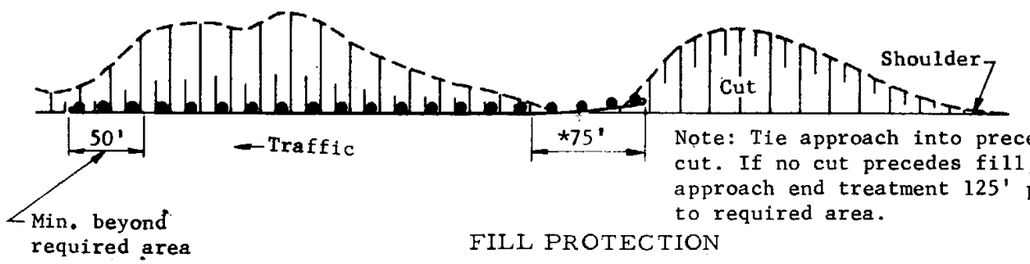

Note: Tie approach into preceding cut. If no cut precedes fill, begin approach end treatment 125' prior to required area.

FILL PROTECTION

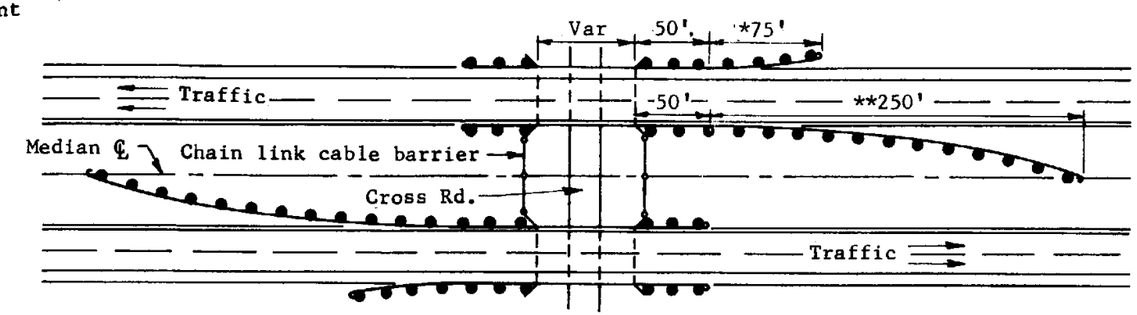

BRIDGE STRUCTURE WITH CROSS ROAD

No guard rail is normally required unless the median is less than 60', traffic lane to traffic lane.

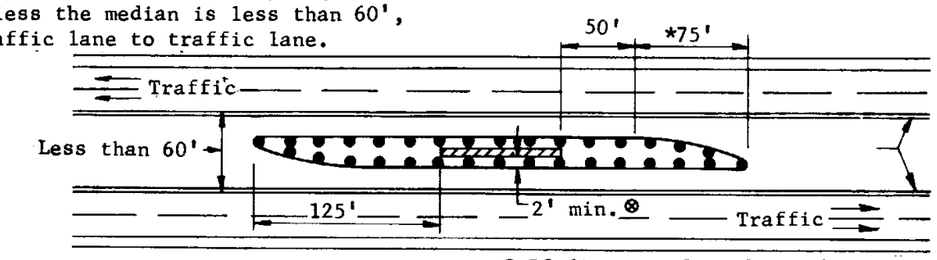

⊗ If distance from face of pier to face of guard rail is less than 2' attach guard rail to pier.

MEDIAN BRIDGE OR SIGN STANDARDS

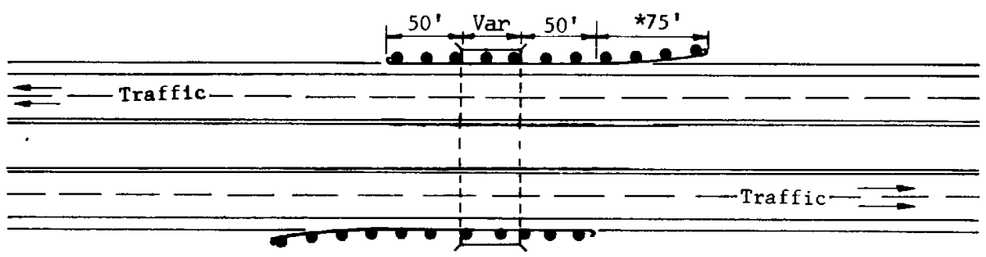

BOX CULVERT WITH DRIVABLE MEDIAN

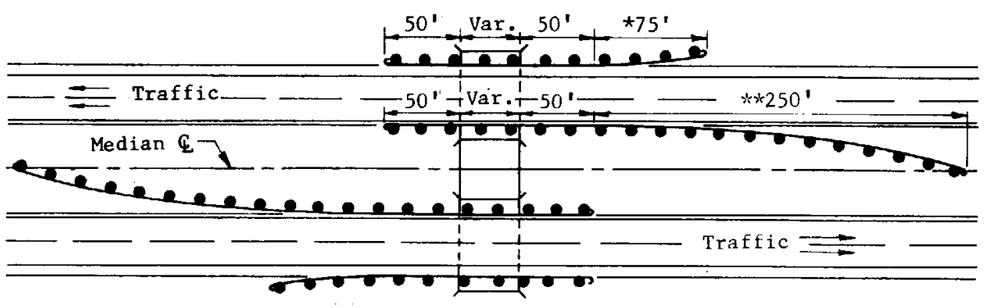

BOX CULVERT WITHOUT DRIVABLE MEDIAN

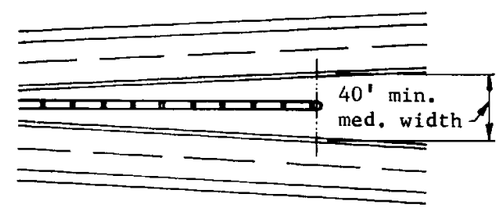

MEDIAN BARRIER TERMINUS

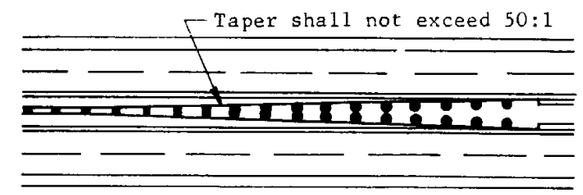

BARRIER TRANSITION AT OVERPASS

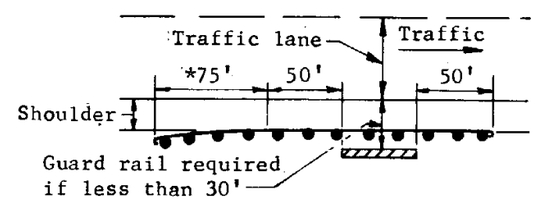

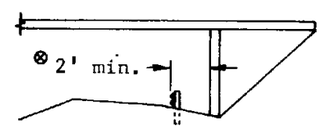

PIER, ABUTMENT OR SIGN BASE
RIGHT SIDE OF ROADWAY

GENERAL NOTES

These drawings do not establish warrants for guard rail installation.

Max. post spacing shall be 6'-3". See Stds. C-10.01, C-10.03 & C-10.04 for post spacing and pavement widening at bridges.

ARIZONA HIGHWAY DEPARTMENT CONSTRUCTION SECTION		Rev 12/68 5/72
GUARD RAIL - STEEL TYPICAL INSTALLATIONS		
Drawn	R.A.F.	Drawing No.
Traced		C-10.06
Checked	R.W.	
Approved Asst. State Eng Const	F. Sandin	

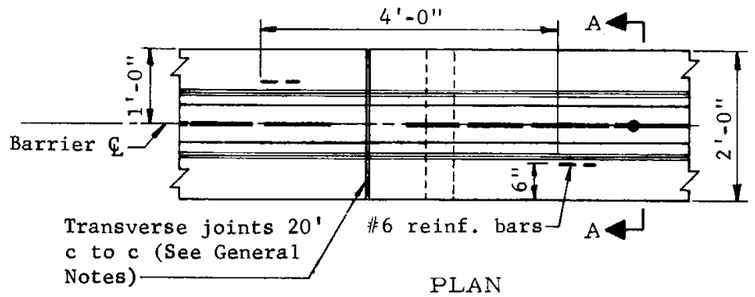

PLAN

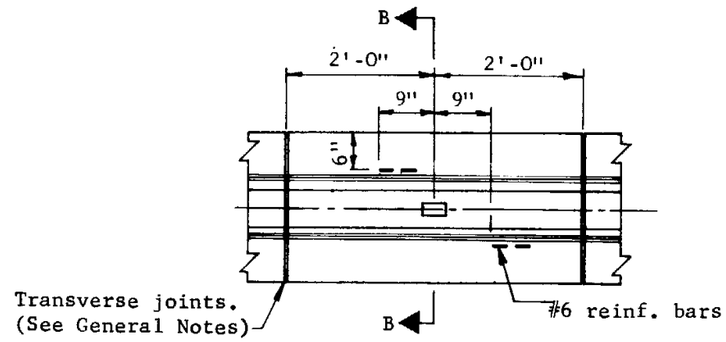

PLAN AT SIGN INSTALLATION

GENERAL NOTES

All concrete shall be Class A.

Transverse joints shall extend through the foundation slab. For continuous or sectional construction, use a 1/4" open joint. Edge joints with a 1/4" radius tool.

Construction joint and #6 bars may be eliminated when barrier and foundation slab are poured monolithic.

For details of transition at terminals and structures, see Std. C-10.09.

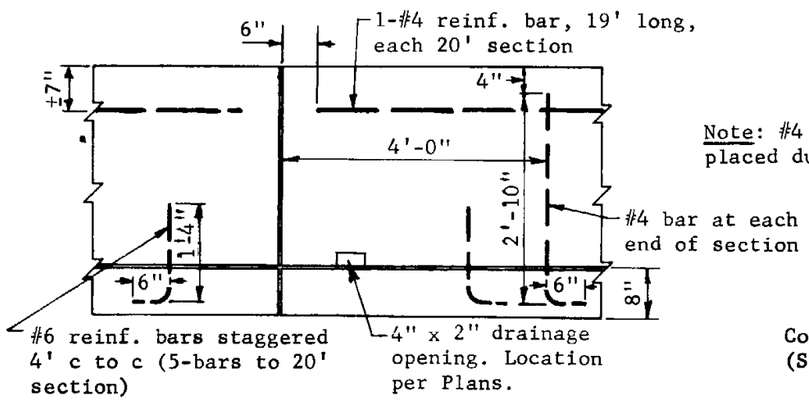

ELEVATION

Note: #4 bars may be placed during pour.

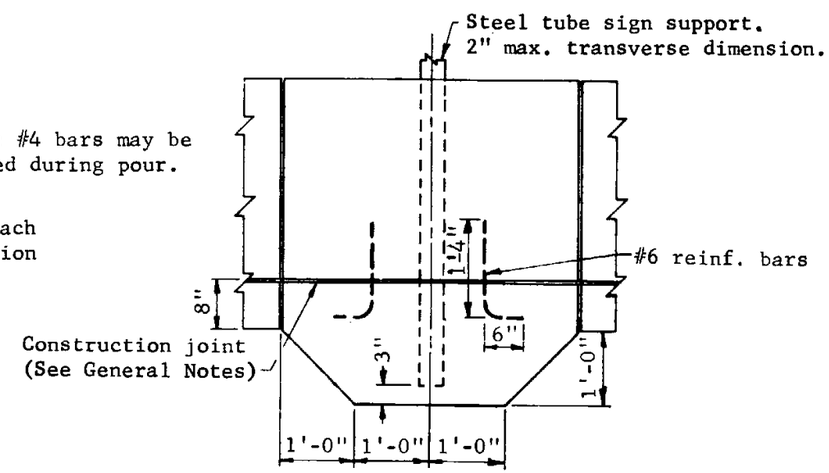

ELEVATION AT SIGN INSTALLATION

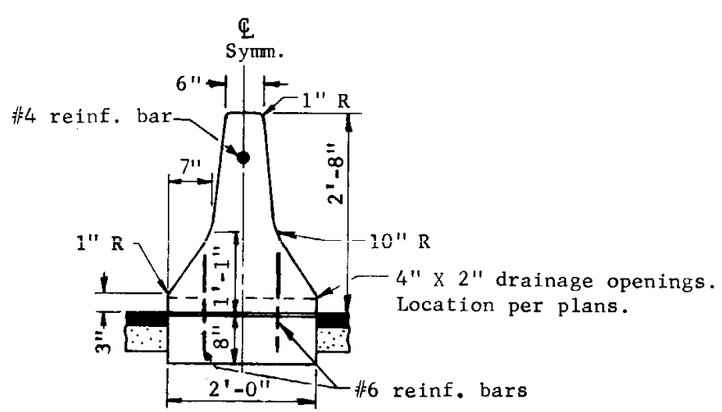

SECTION A-A

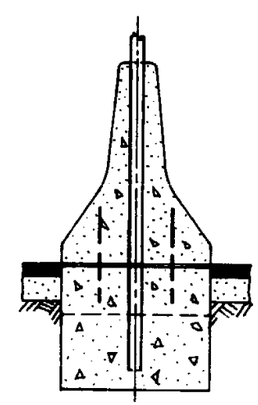

SECTION B-B

ARIZONA HIGHWAY DEPARTMENT CONSTRUCTION SECTION		Rev 5/72
MEDIAN BARRIER CONCRETE		
Drawn D.G.	Drawing No.	
Traced R.A.F.	C-10.08	
Checked J.P.O.		
Approved Asst. State Eng Const		

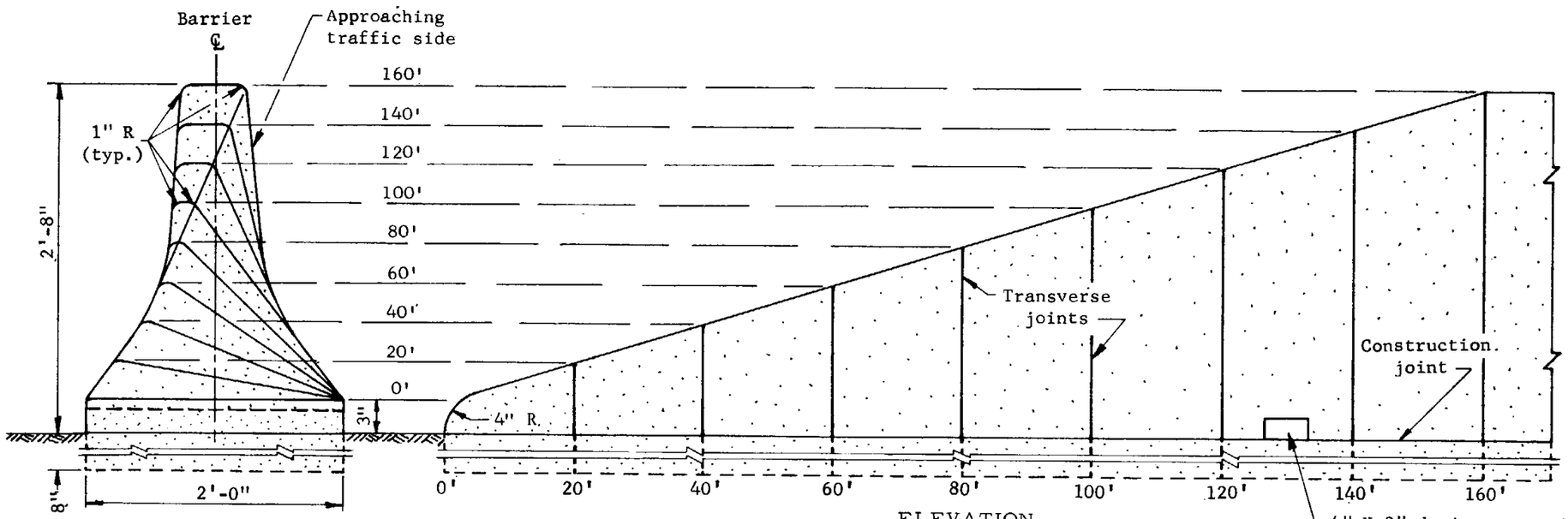

END VIEW

ELEVATION

TRANSITION AT TERMINALS

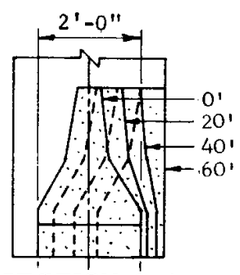

SECTION A-A

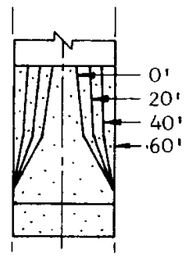

SECTION B-B; 2'-0" PIER

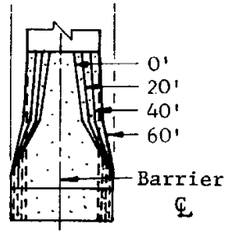

SECTION B-B; 1'-6" PIER

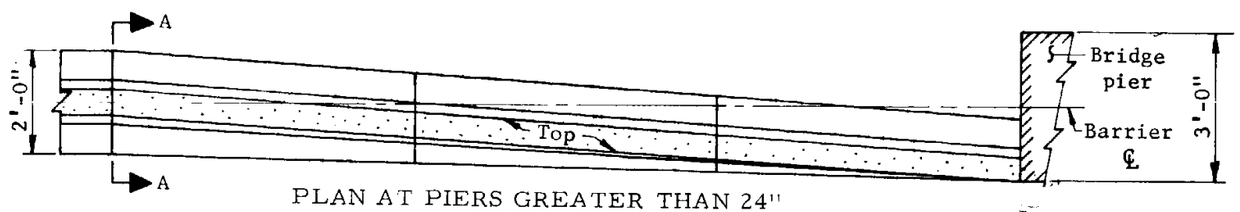

PLAN AT PIERS GREATER THAN 24"

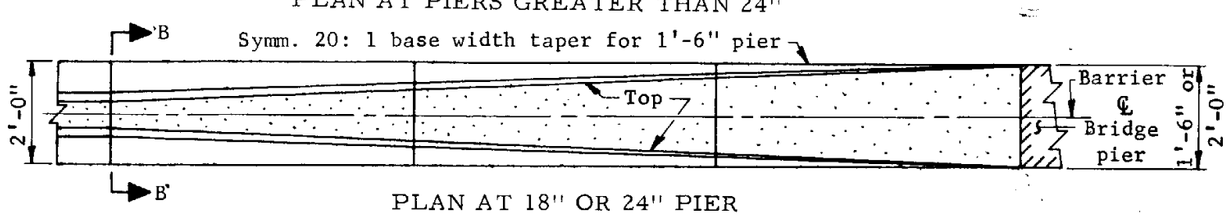

PLAN AT 18" OR 24" PIER

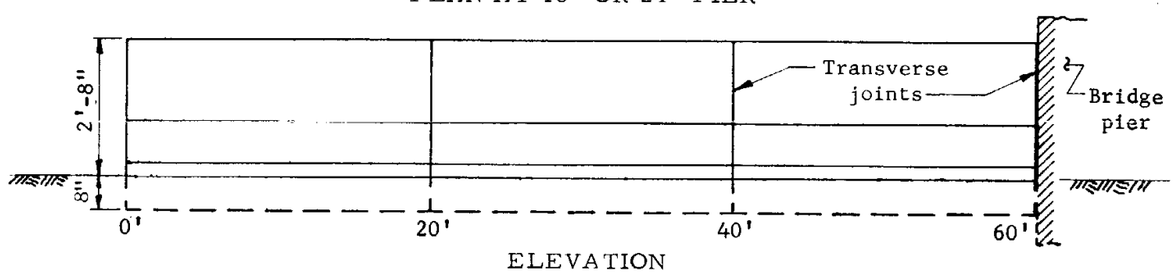

ELEVATION

TYPICAL TRANSITION AT BRIDGE PIERS

GENERAL NOTES

All concrete shall be Class A.

Faces of median barrier shall provide a smooth transition.

For median barrier construction details, see Std. C-10.08.

ARIZONA HIGHWAY DEPARTMENT
PLANS DIVISION

Rev

CONCRETE MED. BARRIER TRANSITION DETAILS

Drawn	D.G. 7/67	Drawing No.
Traced	R.A.F. 8/67	
Checked	J.P.O. JPO 5-68	C-10.09
Approved Engr. Plans	G Heidecker 5-68	

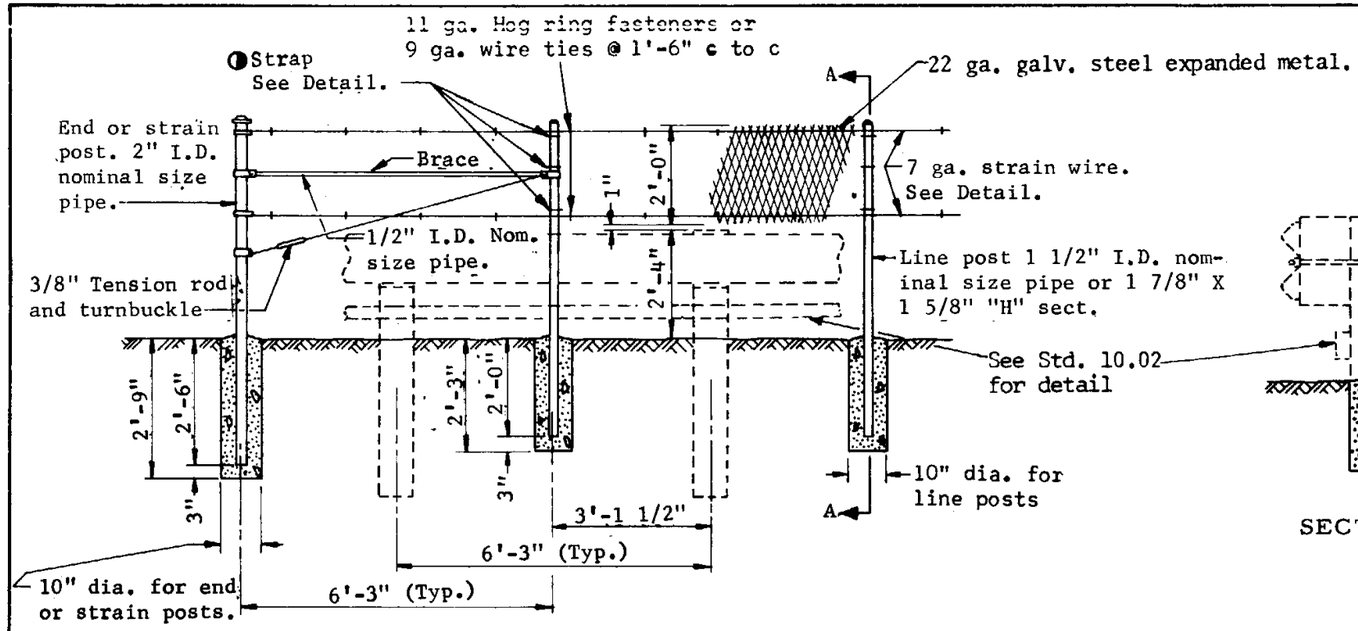

EXPANDED METAL GLARE SCREEN

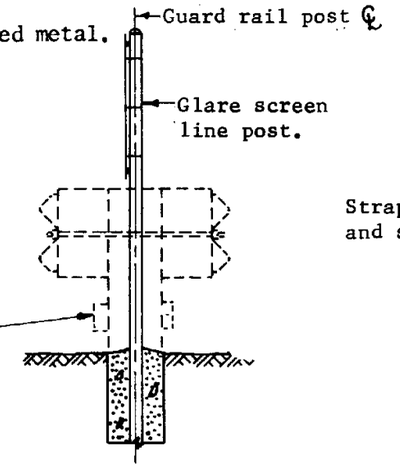

SECTION A-A

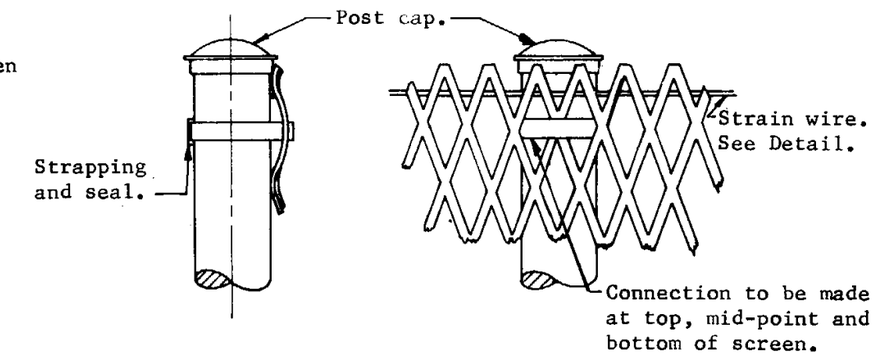

EXPANDED METAL POST CONNECTION DETAIL

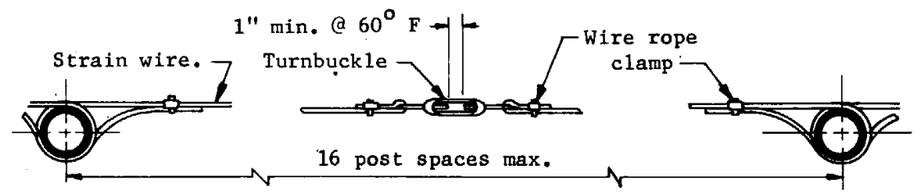

STRAIN WIRE DETAIL

Note: Place intermediate strain posts at 500' (max.) intervals with brace and tension rod each side. If chain link fence type is used, place stretcher bar on each side.

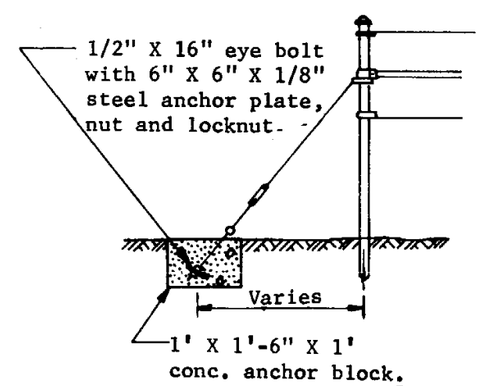

ALTERNATE END POST TENSION ROD LOCATION

GENERAL NOTES

For guard rail details, see appropriate Guard rail standard.

There shall be no connection made between the glare screen and the guard rail.

All components shall be galvanized in accordance with A.H.D. Standard Specifications.

All pipe posts shall be capped.

Concrete may be job mix concrete of not less than 5 sacks per cu. yd.

Expanded metal shall be 0.250" strand width with 1.33" X 4.0" bridge dimensions on tangents and 0.188" strand width with 0.93" X 2.0" bridge dimensions on curves.

Overlaps shall be one full diamond and shall accur at posts only.

ARIZONA HIGHWAY DEPARTMENT CONSTRUCTION SECTION			Rev 3-71 5/72 2/73
MEDIAN GLARE SCREEN			
Drawn	R.A.F. 4-67	Drawing No.	
Traced	S.L.T. 7-67		
Checked	J.P.O. JPO 5-68	C-10.10	
Approved Ass. State Eng Const.	E F Sandler		

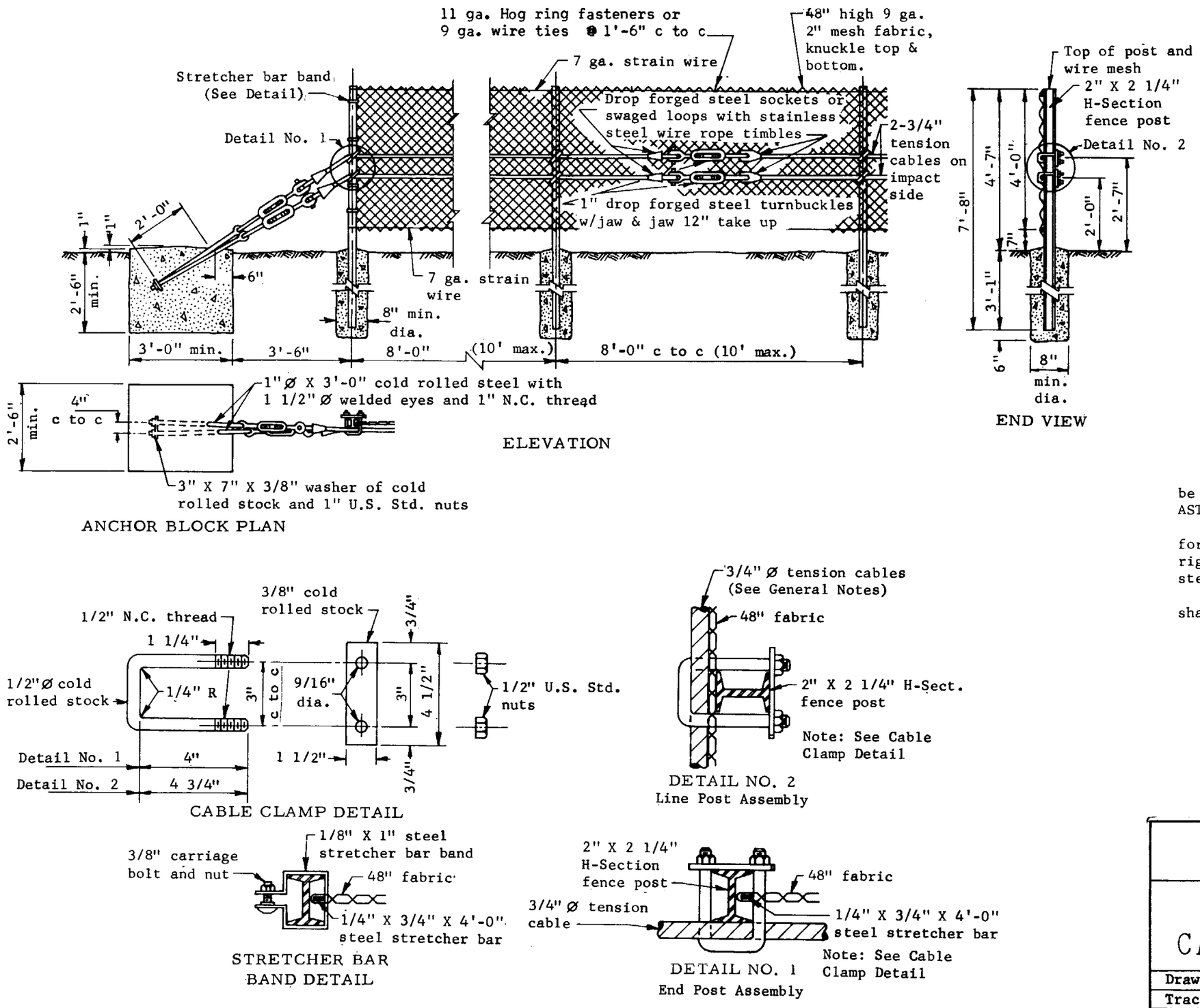

GENERAL NOTES

All concrete shall be Class A.

All material and fittings shall be galvanized in accordance with ASTM A 123.

3/4" tension cables shall be preformed, 6 X 19, hemp core, galvanized, right regular lay and of improved plow steel.

Fittings not specifically detailed shall be of approved, heavy duty design.

ARIZONA HIGHWAY DEPARTMENT
CONSTRUCTION SECTION

Rev 3-71

CHAIN LINK CABLE BARRIER FENCE

Drawn	D.G.	Drawing No.
Traced	R.A.F 2-68	C-10.11
Checked	J.P.O 5-68	
Approved Asst. State Eng Const		

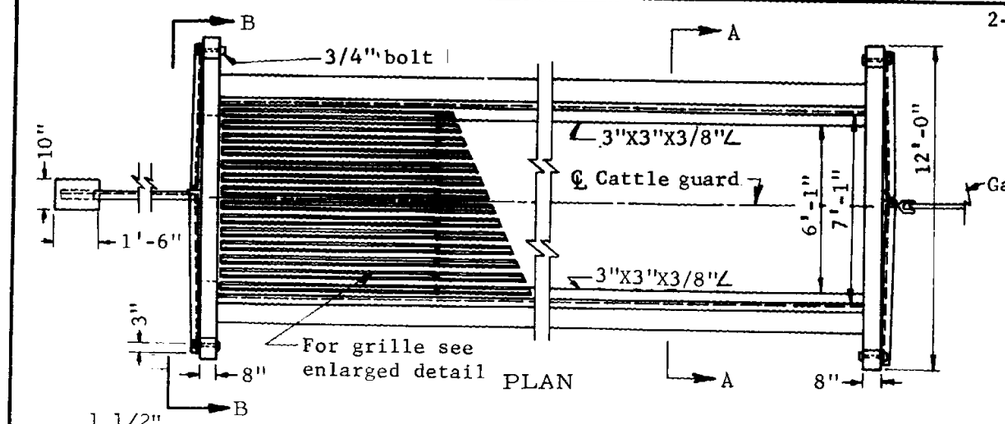

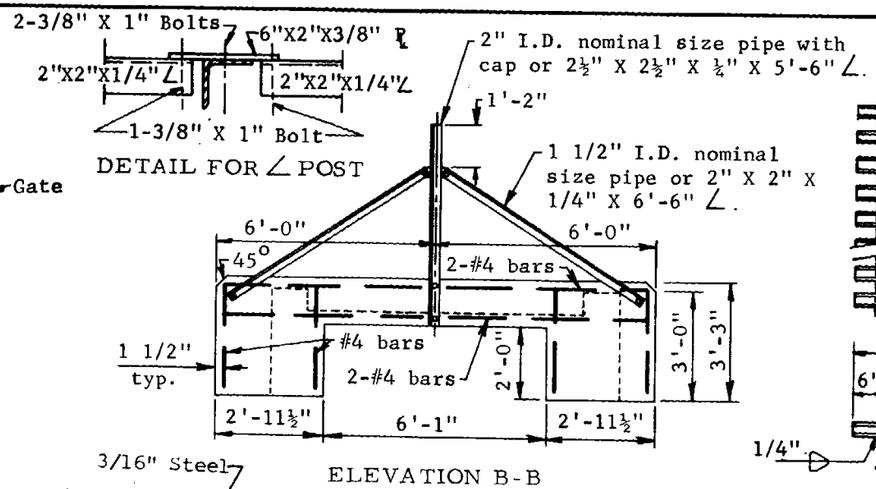

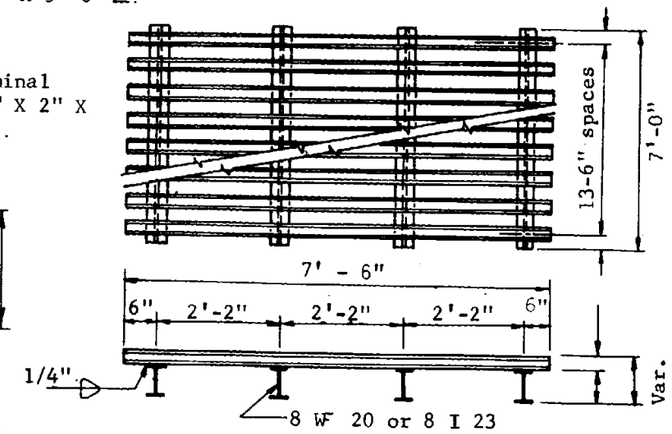

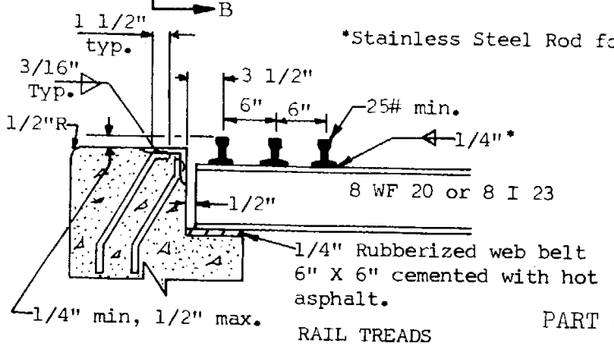

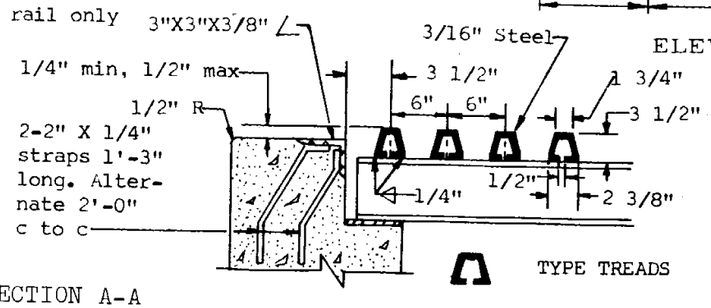

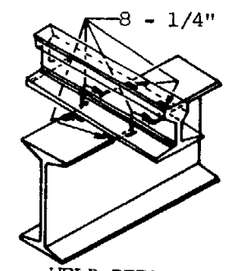

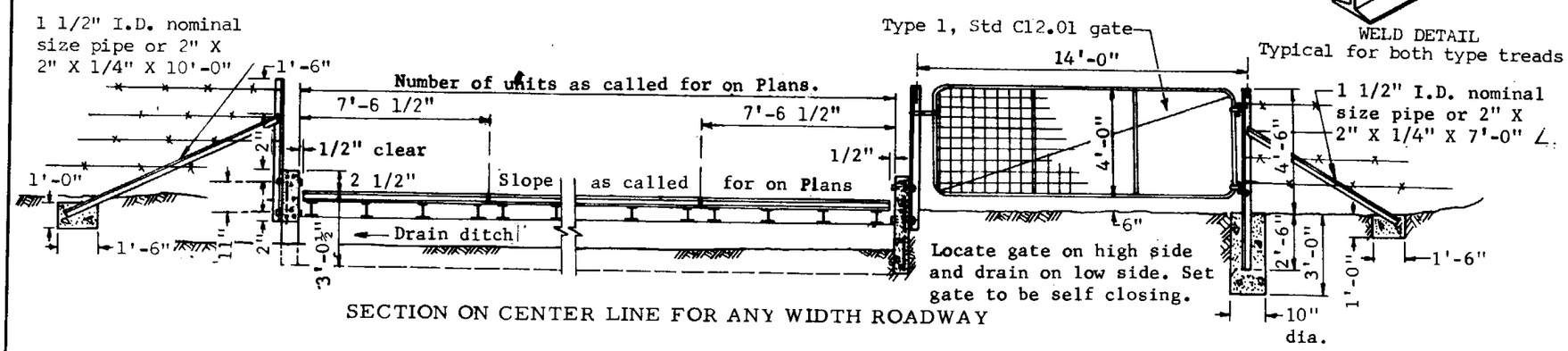

MATERIAL LIST — CATTLE GUARD WITH GATE

Item	Pcs.	Size	Length	Steel#	Conc. C.Y.
Common to all guard lengths					
Post, Steel	3	See Std. C-12.01			
Braces, Steel	6	See Std. C-12.01			
Conc. for setting Post & Braces					0.17
Reinf. Bars	8	#4	11'-6"	61.50	
Reinf. Bars	8	#4	2'-9"	14.70	
7 Unit - 40' ROADWAY					17.42
Fabricated ∠	2	3"X3"X3/8"X52'-10"			
Web Belting	56	6"X6"X¼"			
6 Unit - 34' ROADWAY					15.16
Fabricated ∠	2	3"X3"X3/8"X45'-3½"			
Web Belting	48	6"X6"X¼"			
5 Unit - 26' ROADWAY					12.90
Fabricated ∠	2	3"X3"X3/8"X37'-9"			
Web Belting	40	6"X6"X¼"			
4 Unit - 20' ROADWAY					10.64
Fabricated ∠	2	3"X3"X3/8"X30'-2½"			
Web Belting	32	6"X6"X¼"			

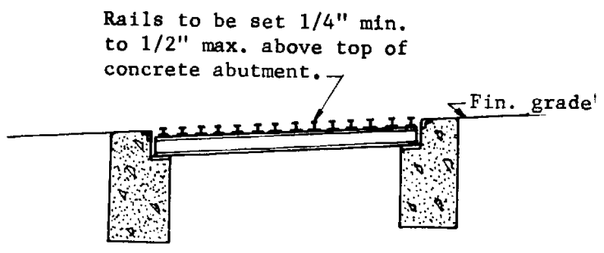

Section A-A showing relationship of top of concrete, and finished grade line.

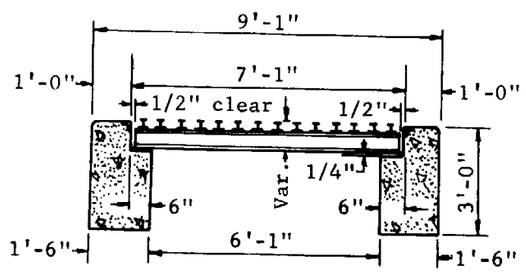

SECTION A-A

GENERAL NOTES

All concete shall be Class A.

Used rails may be used providing they are clean, free from rust, 25 lbs. min. and of uniform cross section.

All rails, structural steel, steel posts and braces shall be in accordance with ASTM A 36 and be given one coat of No. 1 paint.

Round all corners unless otherwise noted.

ARIZONA HIGHWAY DEPARTMENT
CONSTRUCTION SECTION

CATTLE GUARD

Drawn		Drawing No.
Traced	S.L.T.	C-11.01
Checked	J.P.O.	
Approved Asst. State Eng Const		

Rev 12/68 5/72 7/72 2/73

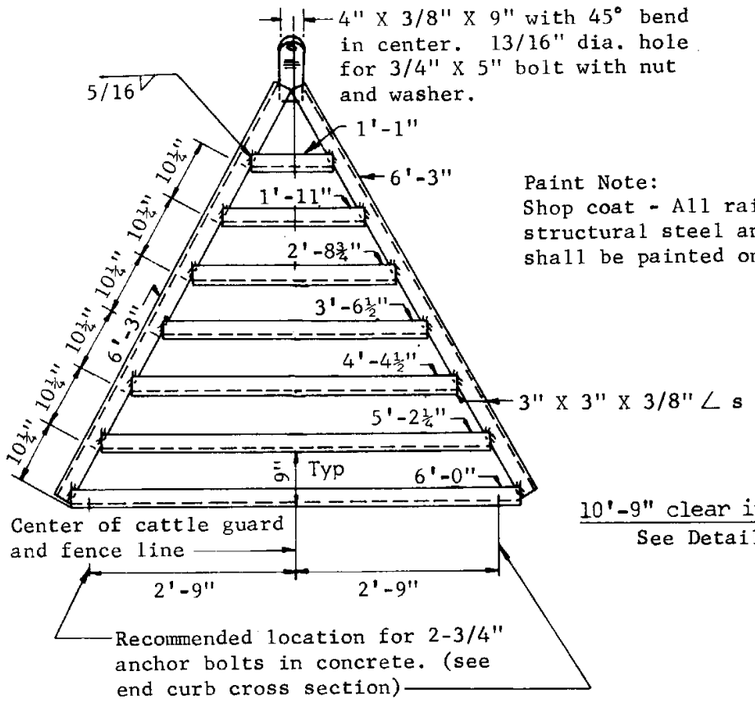

WELDED ANGLE END FRAME
2-required (one at each end)

Paint Note:
Shop coat - All rails, end frames, structural steel and steel posts shall be painted one coat Paint No. 1.

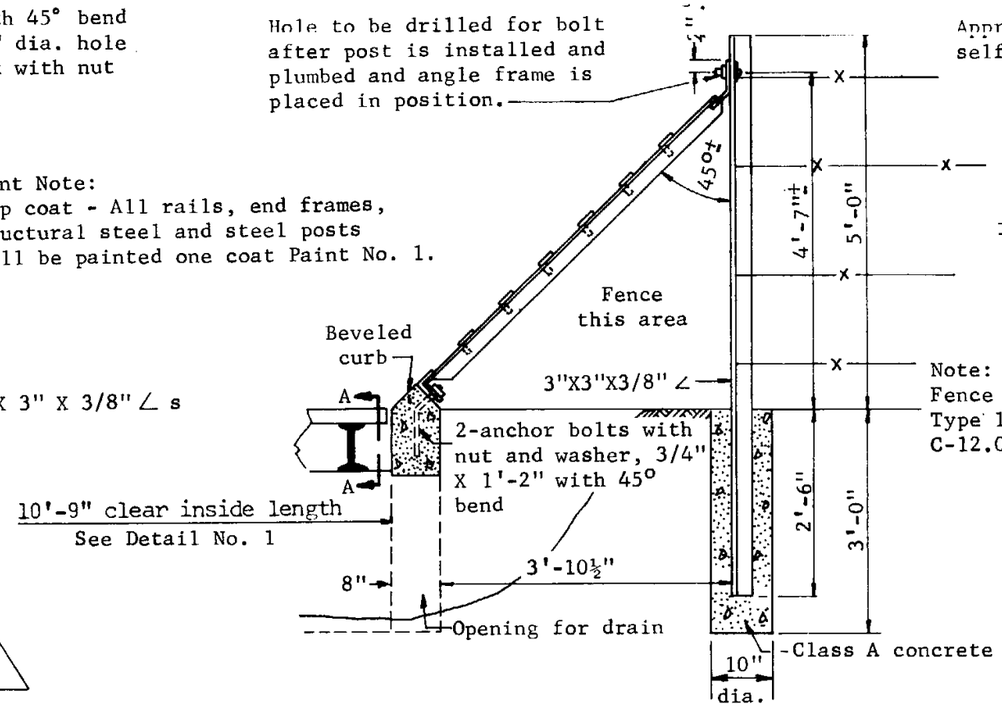

END CURB CROSS SECTION

Note:
Fence posts, braces and Type 1 Gate as per Std. C-12.01.

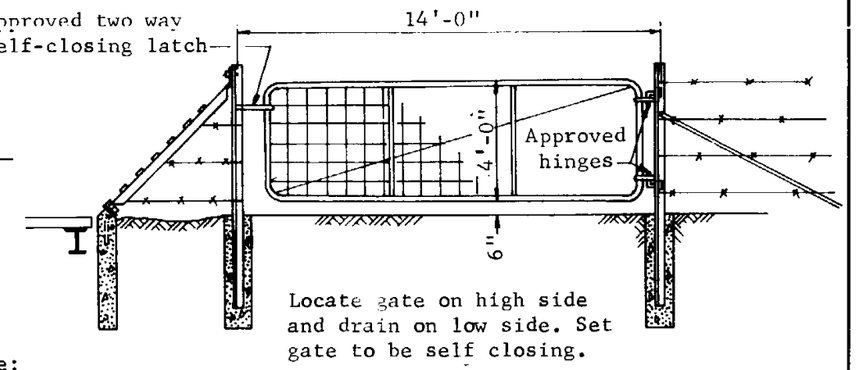

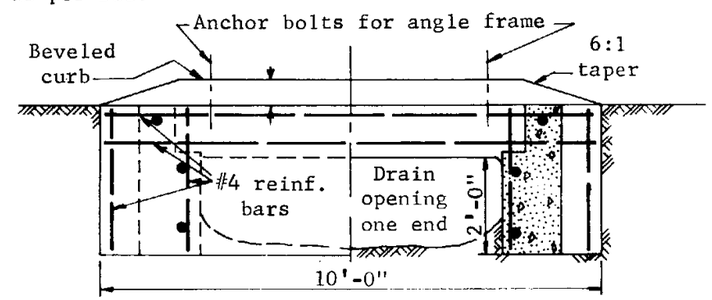

HALF END VIEW (Closed end)

HALF END SECTION (Looking toward open end)

*Stainless steel rod for rail only

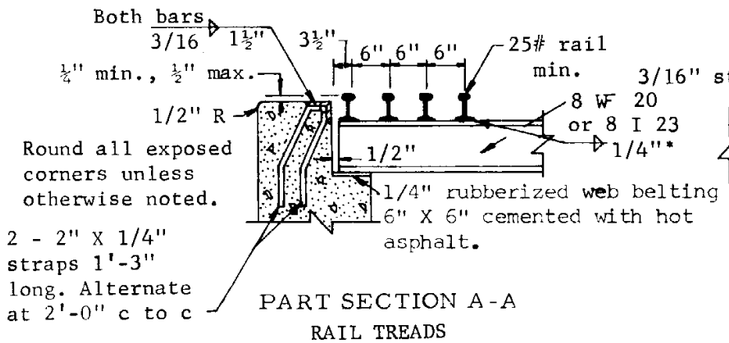

PART SECTION A-A
RAIL TREADS

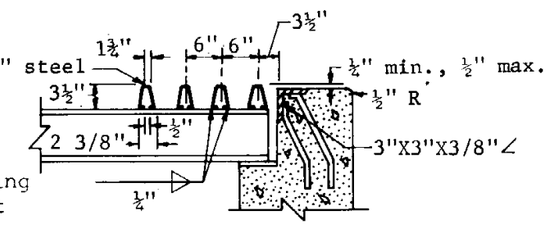

PART SECTION A-A
TYPE TREADS

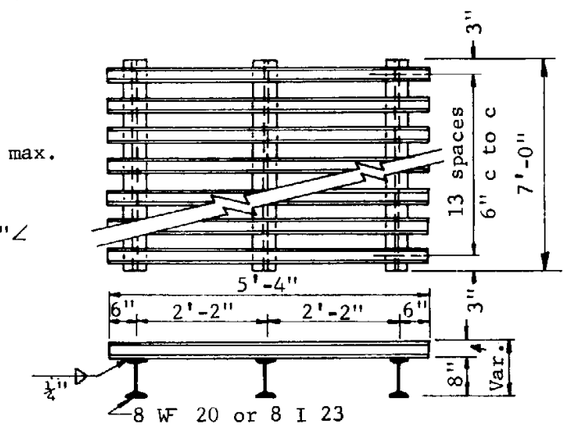

DETAIL OF WELDED GRILLE UNIT
See Std. C-11.01 for weld detail

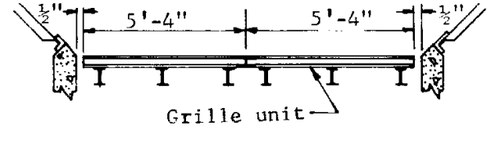

DETAIL NO. 1

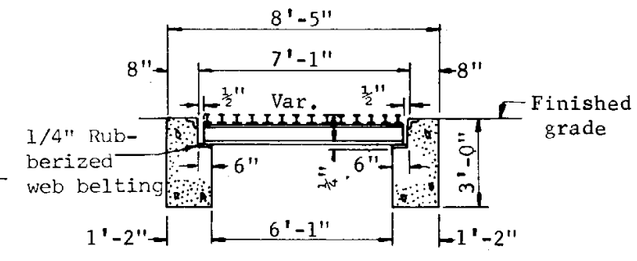

Top of concrete to conform with grade line.

MATERIAL LIST	Req'd.	
Fabricated ∠	2	3" X 3" X 3/8" X 10'-9"
Posts, for fence or gate	3	Same as Std. C-12.01 except as noted.
Bolts, with nut & washers	2	3/4" X 5" straight
Bolts, with nut & washers	4	3/4" X 1'-2", 45 bend mid point (anchor bolts)
Gate, with hinges & latch	1	Type 1 Gate for 14' opening, see Detail
Reinforcing bars	4	#4 bars X 8'-2" straight, aggregate weight, 22 lbs.
Reinforcing bars	8	#4 bars X 2'-10" straight, aggregate weight, 15 lbs.
Reinforcing bars	6	#4 bars X 11'-9" straight, aggregate weight, 47 lbs.
Std. welded grille unit	2	Approximate weight 2200 lbs.
Welded angle end frame	2	Approximate weight 560 lbs.
Web belting, grille shims	12	6" X 6" X 1/4".
Concrete	-	Class A. Total cubic yards 3.96 incl's setting 3 posts.

ARIZONA HIGHWAY DEPARTMENT
CONSTRUCTION SECTION

CATTLE GUARD - RANCH

FOR SIDEROAD ONLY

Drawn	L.D. 5-54	Drawing No.
Traced	S.L.T. 8-67	C-11.02
Checked	P.O. JPO 5-68	
Approved Assr. State Eng Const	E F Laudlin	

Rev 3-71 7/72 2/73

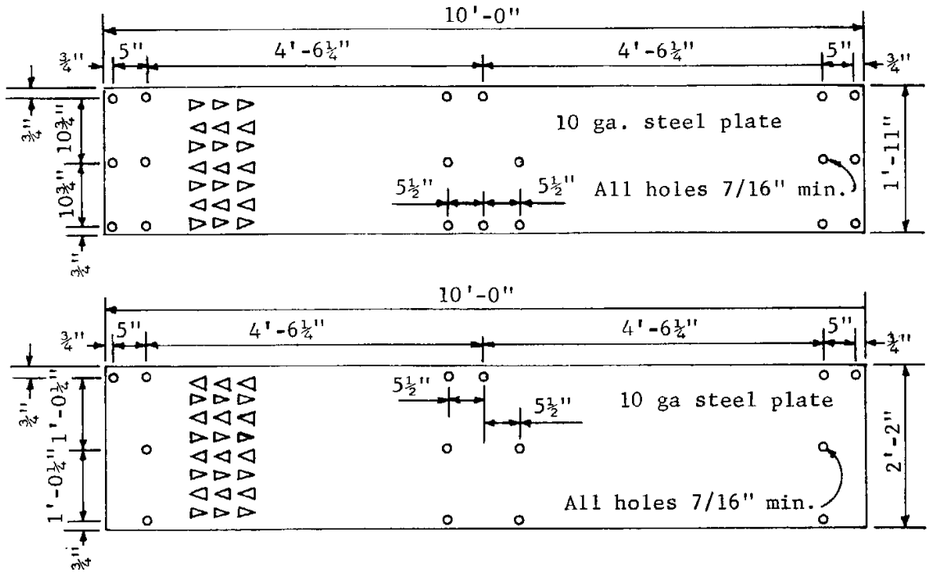

PLAN - 23" & 26" CATTLE GUARD PLATE

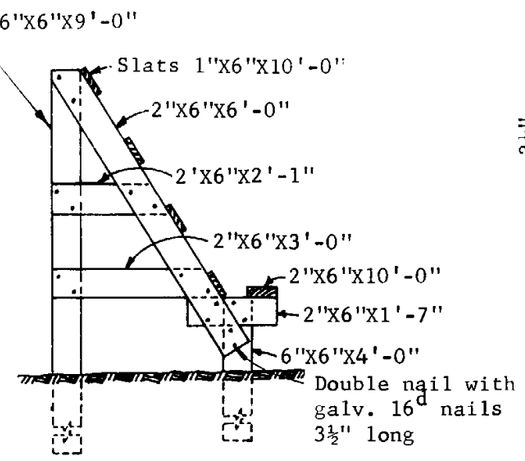

END FRAME TIMBER SIZES

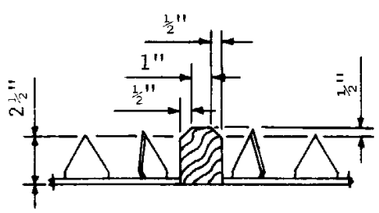

DETAIL-2" X 3" TIMBER BETWEEN ADJACENT PLATES

Fasten down with 3 -3/8" X 7" lag screws each piece

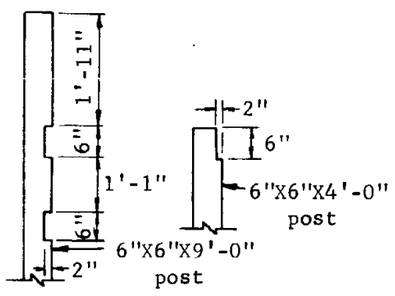

END FRAME POST NOTCH DETAIL

GENERAL NOTES

The 2" X 6" & 3" X 6" timbers that are fastened to the ties and the 6" X 6" posts shall be pressure treated, rough and unpainted. The remaining timber shall be given one coat of No. 7 and one coat of No. 8 paint.

The metal plates shall be furnished with the manufacturer's shop coat of paint or shall be given one coat of No. 1 paint.

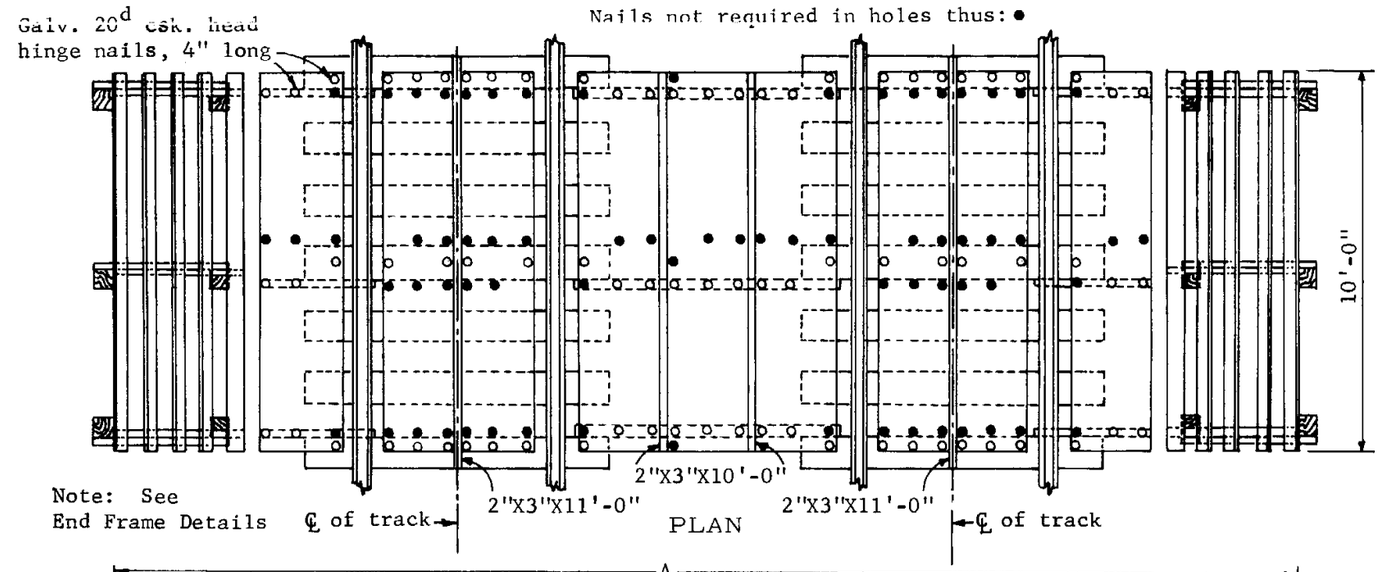

PLAN

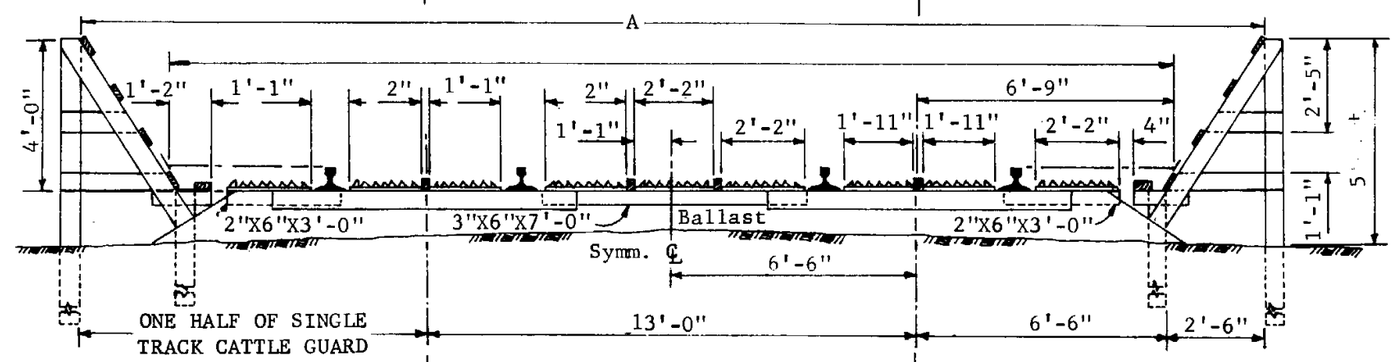

ELEVATION

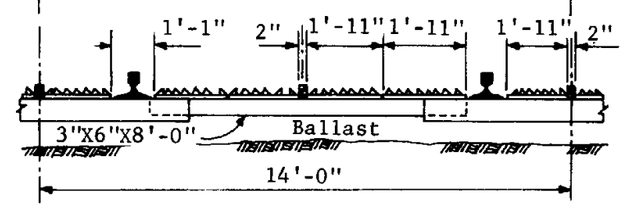

ELEVATION

DIMENSIONS	A	B
Single Track	18'-0"	13'-6"
13' Track Centers	31'-0"	26'-6"
14' Track Centers	32'-0"	27'-6"

ARIZONA HIGHWAY DEPARTMENT
PLANS DIVISION

Rev

CATTLE GUARD RAILROAD

Drawn	D.G. 3-67	Drawing No.
Traced	S.L.T. 4-67	C-11.03
Checked	J.P.O. JPO 5-68	
Approved Engr. Plans	G Weidner 5-68	

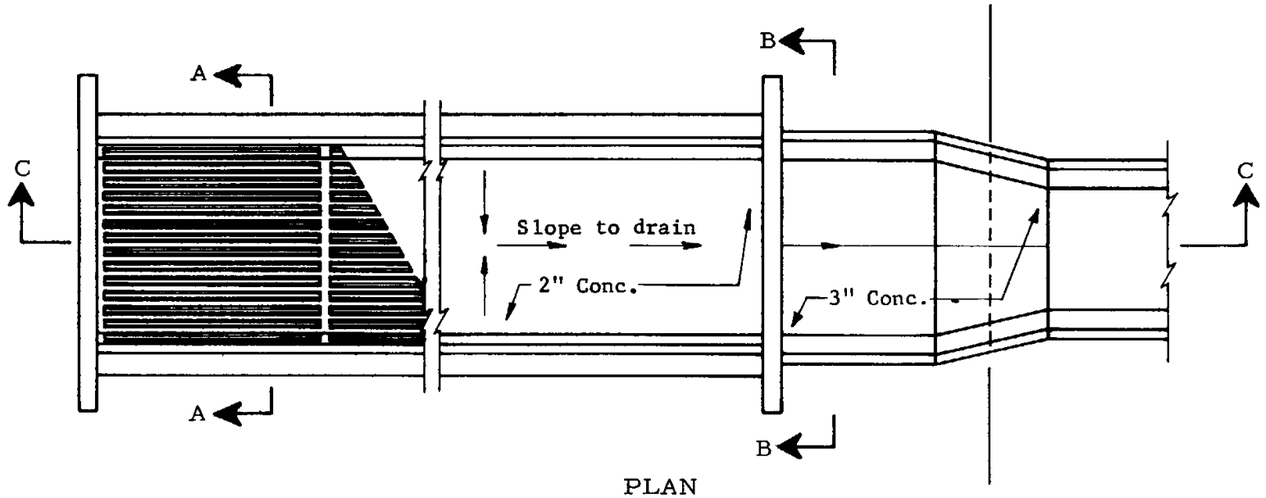

PLAN

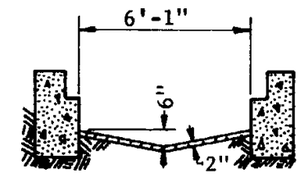

SECTION A-A

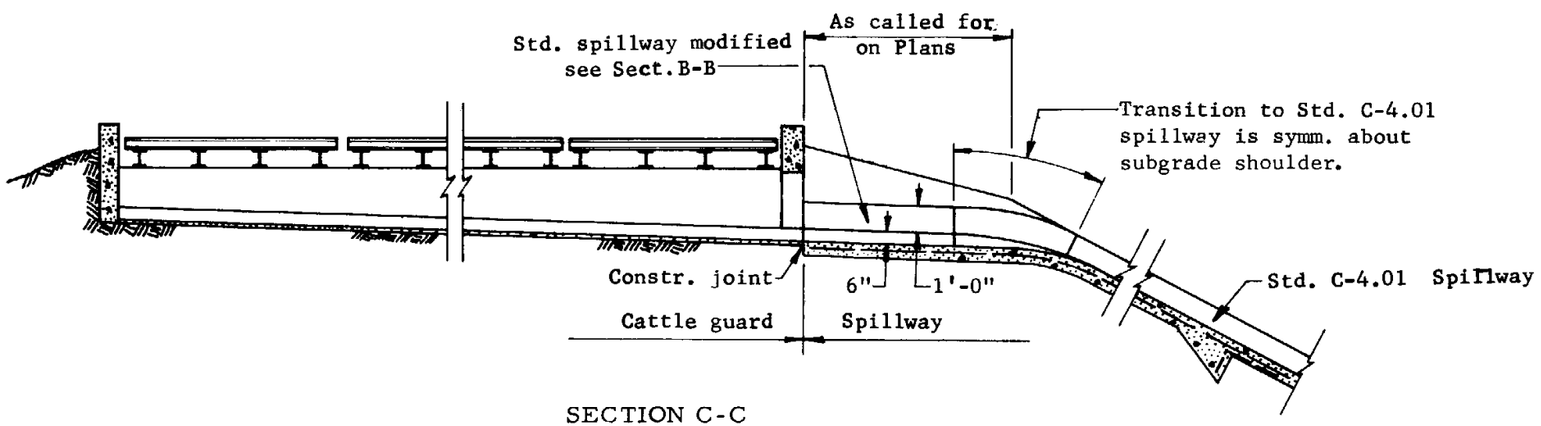

SECTION C-C
IN EMBANKMENT

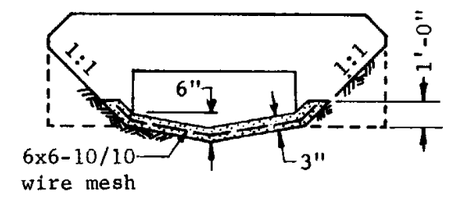

SECTION B-B

GENERAL NOTES

For all other cattle guard details, see Std. C-11.01.

This standard shall be used in embankment or where highly erodable soil is found.

All concrete shall be Class A.

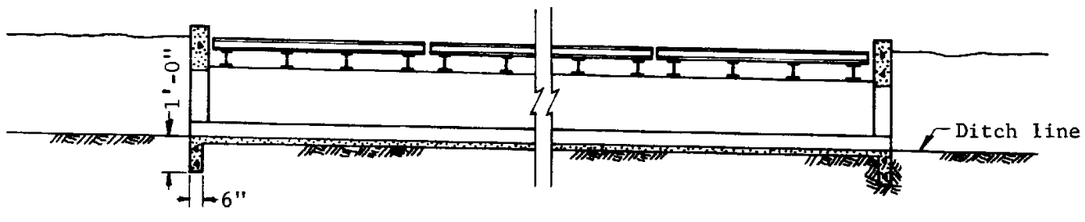

SECTION C-C

WHERE USED FOR THRU DRAINAGE-
CATTLE GUARD OPEN BOTH ENDS

ARIZONA HIGHWAY DEPARTMENT
PLANS DIVISION

Rev 12-2-68

CATTLE GUARD DRAINAGE

Drawn	M.C.T. 6-15-65	Drawing No.
Traced	R.A.F. 5-5-67	
Checked	J.P.O. JPO 5-68	C-11.04
Approved Engr. Plans	G Weidecker 5-68	

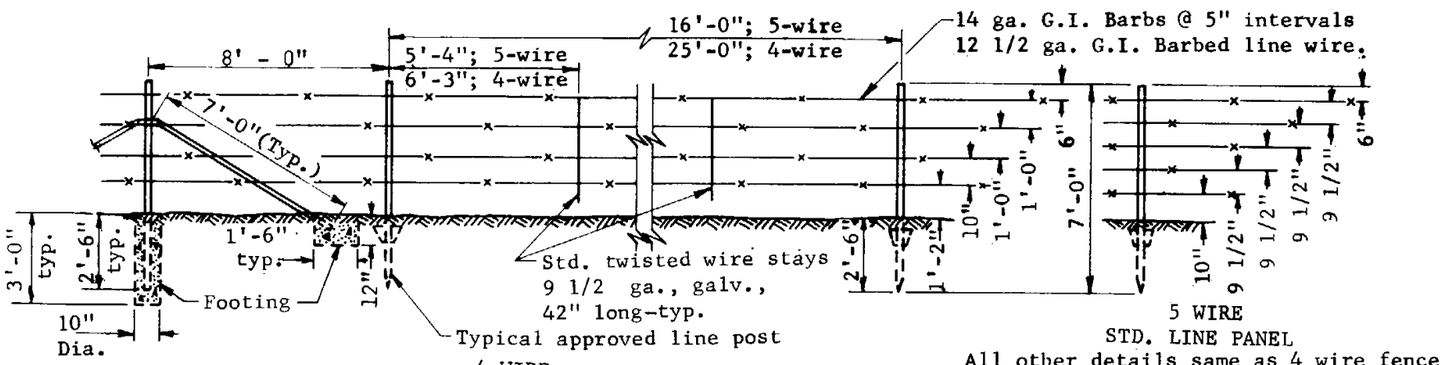

STD. CORNER, ANGLE, END OR *INTERSECTION PANEL

4 WIRE STD. LINE PANEL

5 WIRE STD. LINE PANEL
All other details same as 4 wire fence

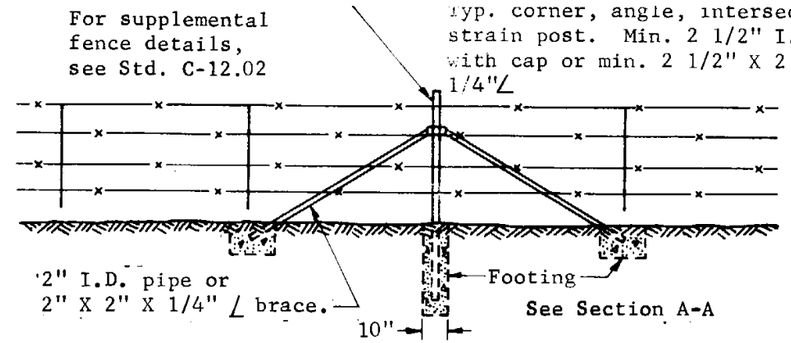

STANDARD STRAIN POST
To be spaced @ 650' max. intervals.

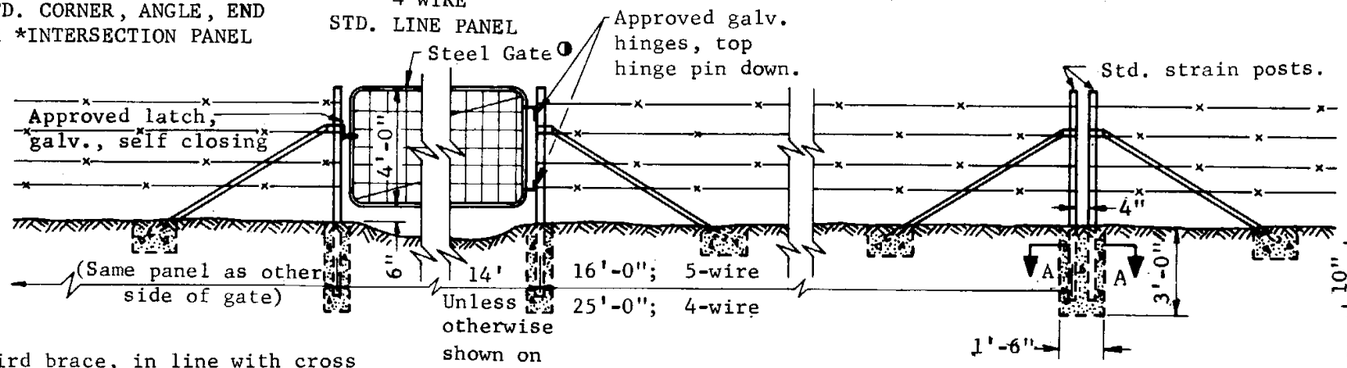

STANDARD TYPE 1 GATE
(Set gate to be self-closing)

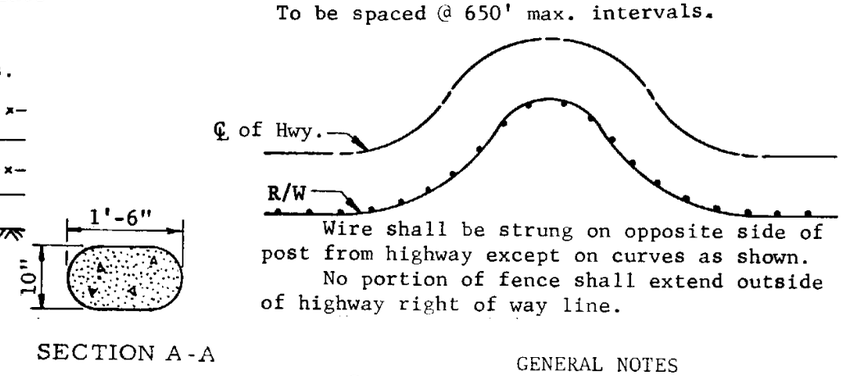

Wire shall be strung on opposite side of post from highway except on curves as shown.
No portion of fence shall extend outside of highway right of way line.

SECTION A-A

* Third brace, in line with cross fence, required at intersection.

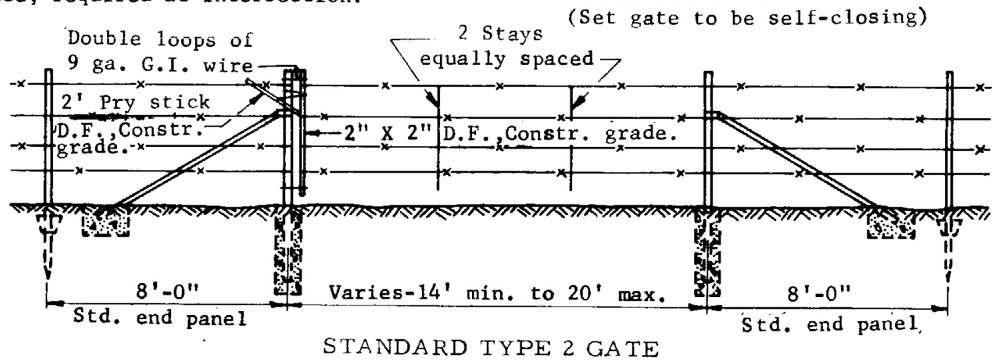

STANDARD TYPE 2 GATE

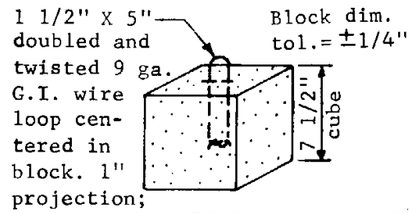

DETAIL-CONCRETE SAG WEIGHT

Where needed, hang 30-35# stone sag weights on doubled and twisted 9 ga. G.I. wire. As an alternate, use conc. sag weight. (See Detail)

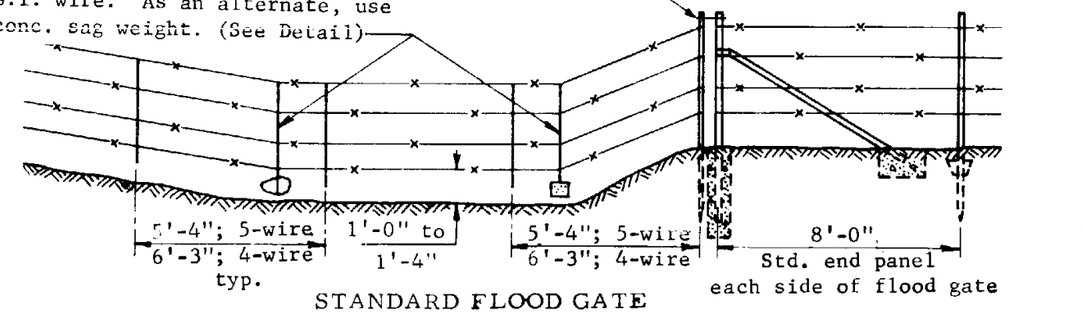

STANDARD FLOOD GATE
Length is Variable

Note:
When tubular post hangers and/or latches are used, hangers and/or latches shall be drilled for a single 3/32" ø min. drive pin to prevent rotation of the hangers and latches.

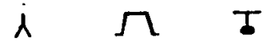

TYPICAL STEEL LINE POST SECTIONS

◑ 1 3/8" ø tubing - 2 vert. braces. Mesh □, Δ, ◊ - 11 ga. line wires - 12 1/2 ga. crosswires. 1 - adjustable diagonal guy. Fully galvanized.

GENERAL NOTES

Posts and braces shall be green in color. Posts may have white top. Wood parts of Type 2 gate shall be unpainted.

Line posts shall be "T", "U", "Rail", "Hat", or similar production sections except "Ells" or "Angles; shall weigh, exclusive of anchor, a min. of 1.3 #/ft. and shall be punched, knobbed or corrugated to hold wire firmly in position. Clamps of min. 11 ga. galv. wire shall be used to attach fence. Punched, lug type fasteners are not permitted.

Where anchor is omitted or post hole is drilled, posts must be set in concrete.

There may be a max. of two splices between strain posts but not on the same wire and no splice shall be placed within 100' of a strain, corner or gate post.

Post spacing shall be measured along top wire.

Angle is any deflection greater than 15°

For Concrete Spec. See Std C-12.02

ARIZONA HIGHWAY DEPARTMENT
CONSTRUCTION SECTION

Rev 12/68 5/72

LINE FENCE AND GATES
STEEL POSTS

Drawn	K.S	Drawing No.
Traced		C-12.01
Checked	R.W	
Approved Asst. State Eng Const.		

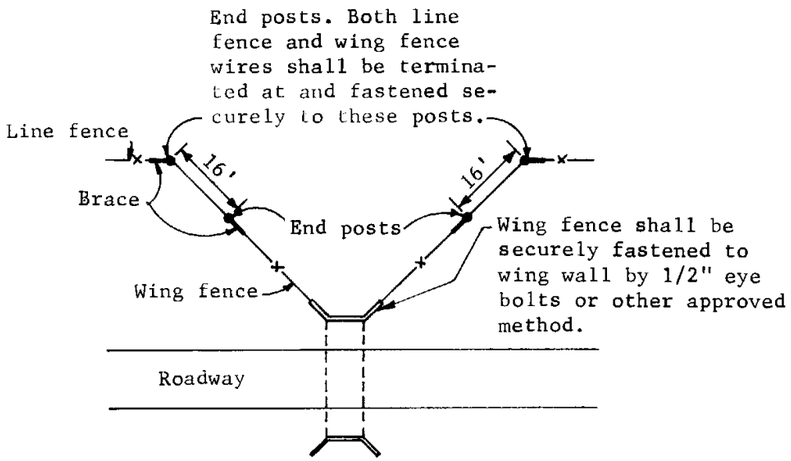

WING FENCE DETAIL

This detail shall be used where wing fences are called for on plans.

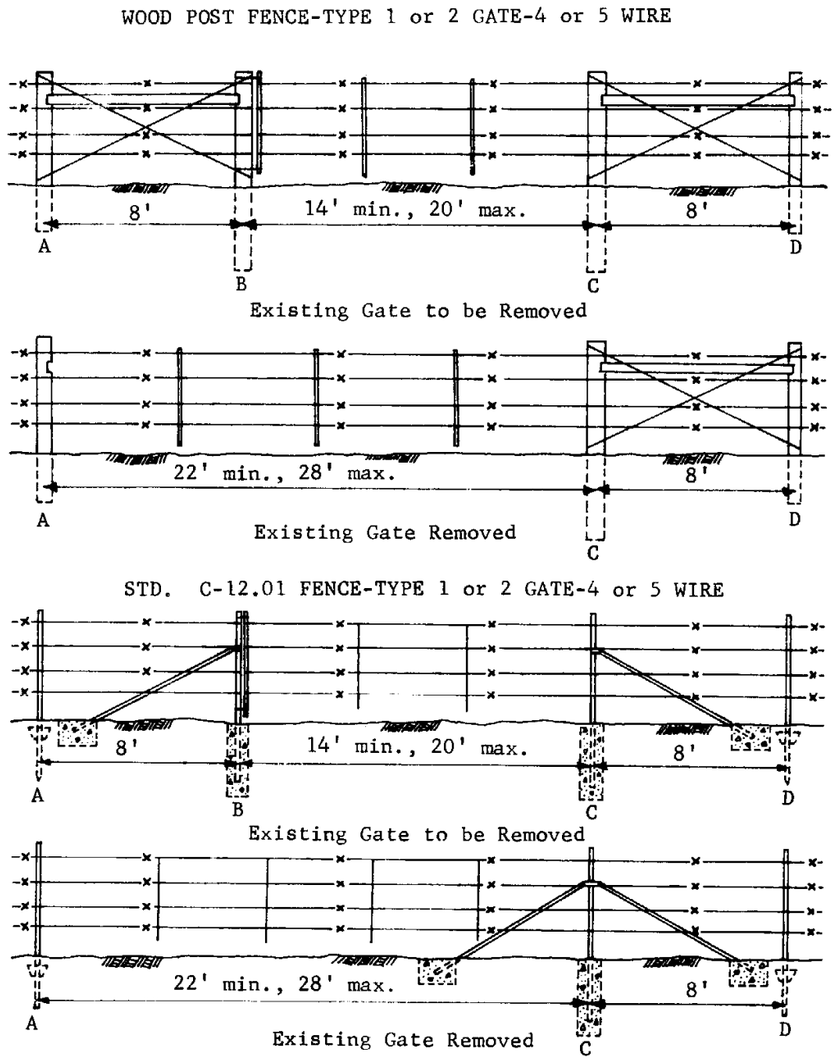

DETAIL FOR REMOVING EXISTING LINE GATES

Procedure: Remove gate and hardware and wire between posts A and C. Install new second brace at post C (Std. C-12.01 fence only). Stretch new wire between posts A and C. Remove post B and brace.
(Approved salvaged wire may be used.)
Staples for wood posts shall be 1 1/2" galvanized and fabricated from 9 gauge wire.

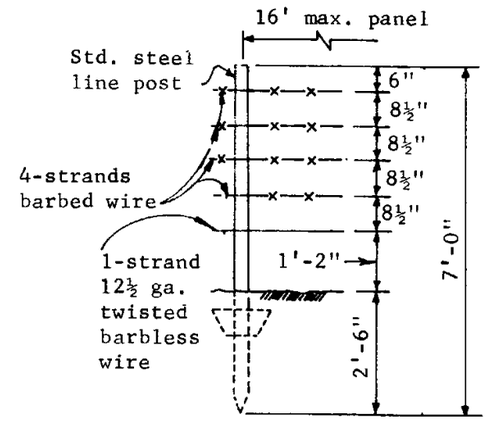

Drawn for 5-wire

GAME FENCE

4-wire game fence shall be constructed using standard 4-wire line fence post spacing and substituting 12 1/2 ga. twisted,barbless wire for the bottom strand.

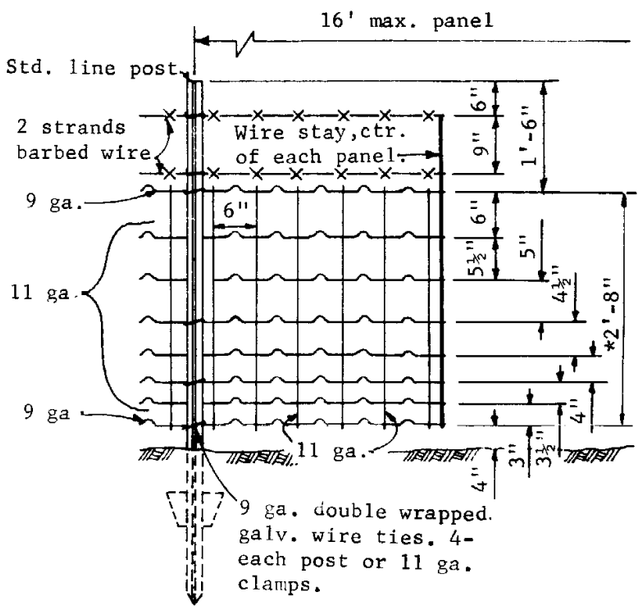

STOCK FENCE

*Rectangular mesh galv. stock fence.

GENERAL NOTES

For any details not shown on this sheet, refer to Std. C-12.01

Concrete for posts may be job mix concrete of not less than 5 sacks per cu. yd.

ARIZONA HIGHWAY DEPARTMENT CONSTRUCTION SECTION		Rev 12/63 5/72
SUPPLEMENTAL FENCE DETAILS		
Drawn	K.S	Drawing No.
Traced		C-12.02
Checked	R.W	
Approved Asst. State Eng Const.	E. Sandlin	

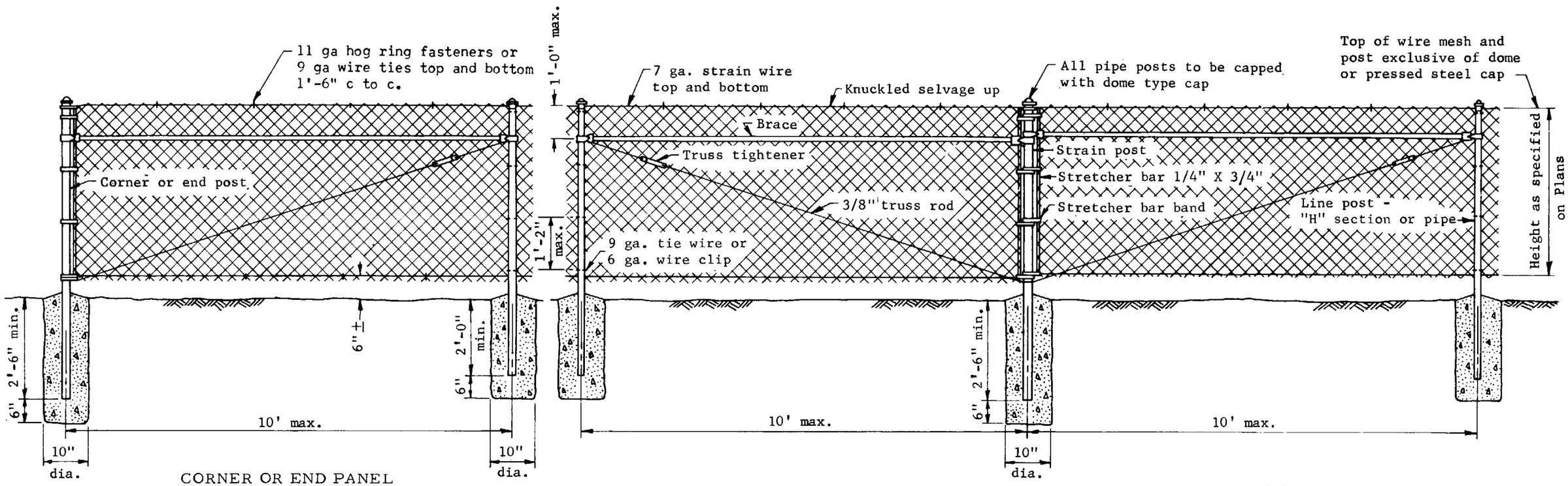

CORNER OR END PANEL

STRAIN PANEL

To be spaced at 500' maximum intervals

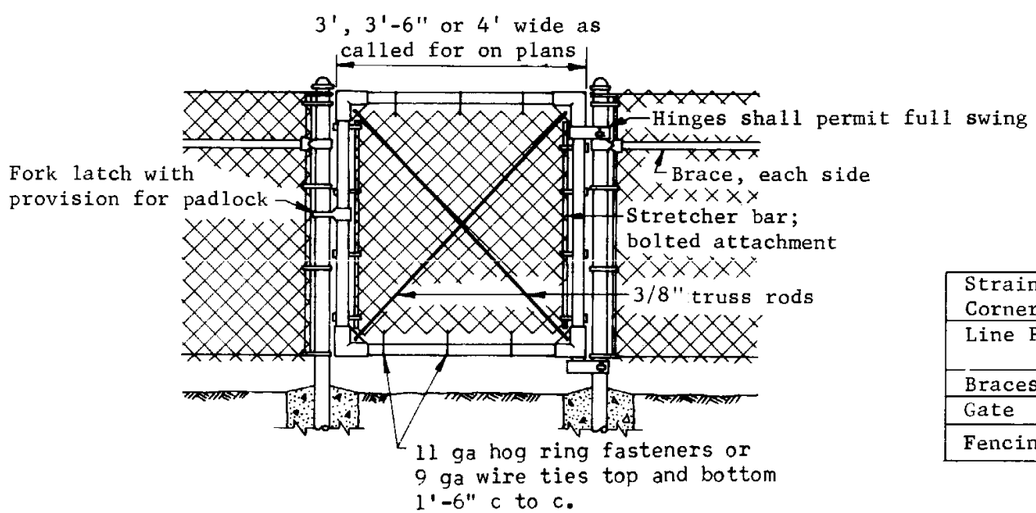

WALK GATE

Strain, End & Corner Posts	2" I.D. Nominal size pipe
Line Posts	1 1/2" I.D. Nominal size pipe "H" Sec. 1 7/8" X 1 5/8" Nominal size
Braces	1 1/4" I.D. Nominal size pipe
Gate	1 1/2" I.D. Nominal size pipe
Fencing	9 ga., 2" mesh fabricated wire

GENERAL NOTES

Concrete for posts may be job mix of not less than 5 sacks per cu. yd.

Gates shall be of welded or malleable cast or pressed steel fitting construction.

Fittings not specifically detailed shall be of approved heavy duty design.

"H" Section posts shall be capped with pressed steel top.

ARIZONA HIGHWAY DEPARTMENT
CONSTRUCTION SECTION

Rev 5-71
5/72

FENCE CHAIN LINK

Drawn	L.O.M. 2-58	Drawing No.
Traced	R.A.F. 11-67	
Checked	J.P.O. JPO 5-68	C-12.03
Approved Asst. State Eng Const.	E F Handlen	

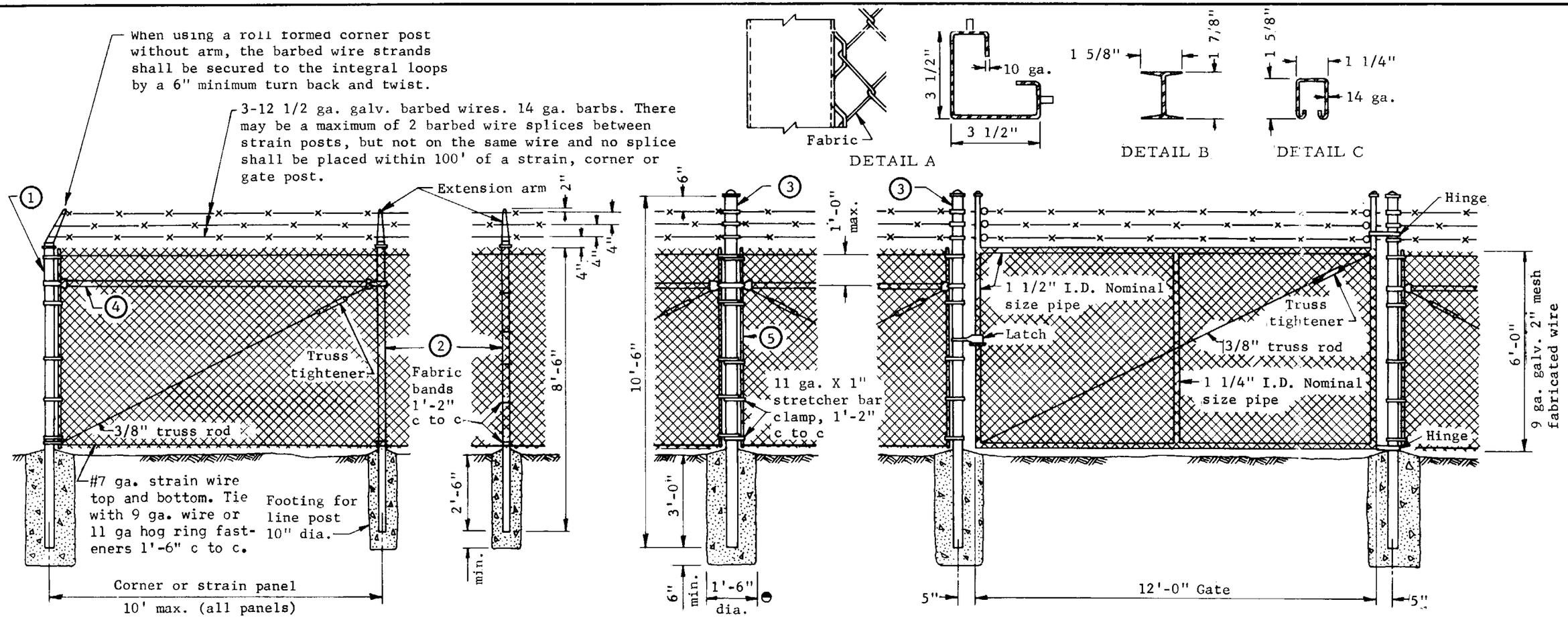

⊖ Footing for Strain, End, Corner and Gate Posts

Note: For Walk Gate, see Std. C-12.03.

Fencing shall be 9 ga., 2" mesh, fabricated wire.

Fence Using Pipe Members		
Member	Size	Lgth.
① Corner post	3 1/2" I.D. nominal pipe size	9'-0"
② Line post	1 1/2" I.D. nominal pipe size	8'-6"
③ Strain or gate post	3 1/2" I.D. nominal pipe size	10'-6"
④ Brace	1 1/4" I.D. nominal pipe size	as req'd.
⑤ Stretcher bar	1/4" x 3/4" flat	6'-2"
Fence Using Roll Formed Members		
① Corner post	5.14# /ft. section with integral fabric loops per Detail A or equal	9'-0"
② Line post	2.72# /ft. section per Detail B or equal	8'-6"
③ Strain or gate post	3 1/2" I.D. nominal pipe size	10'-6"
④ Brace	1.35# /ft. section per Detail C or equal	as req'd.
⑤ *Stretcher bar	1/4" X 3/4" flat	6'-2"

* Not used with corner post having integral fabric loops. (See Detail A)

GENERAL NOTES

Concrete for posts may be job mix concrete of not less than 5 sacks per cu. yd.

Gates shall be of welded or malleable cast or pressed steel fitting construction.

Fittings not specifically detailed shall be of approved heavy duty design.

Strain posts shall be spaced at 500' maximum intervals and both corner and strain posts shall have strain panels each side.

All pipe posts shall be capped.

ARIZONA HIGHWAY DEPARTMENT
CONSTRUCTION SECTION

Rev 3-71 5/72

FENCE-INDUSTRIAL TYPE, FABRICATED WIRE

Drawn	L.O.M. 3-65	Drawing No.
Traced	R.A.F. 1-68	C-12.04
Checked	J.P.C. JPO 5-68	
Approved Asst. State Eng Const.	F. Sandlin	

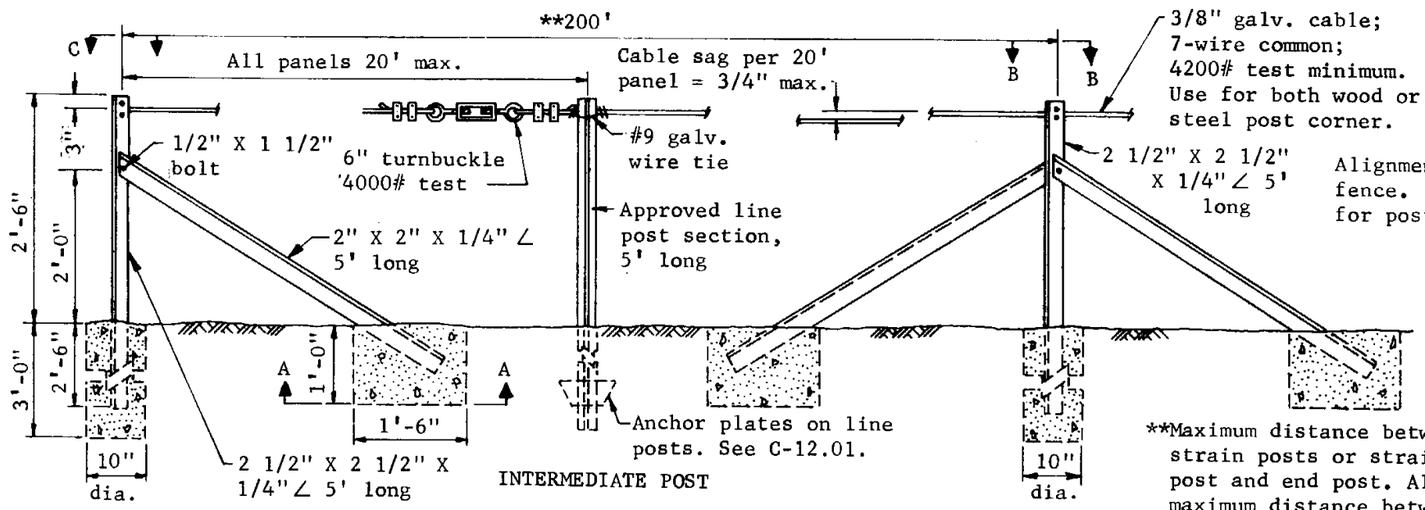

TYPE 1 BARRIER FENCE - STEEL POSTS

**Maximum distance between strain posts or strain post and end post. Also, maximum distance between cable clip splices. Place turnbuckle approximately midway between cable clip splices.

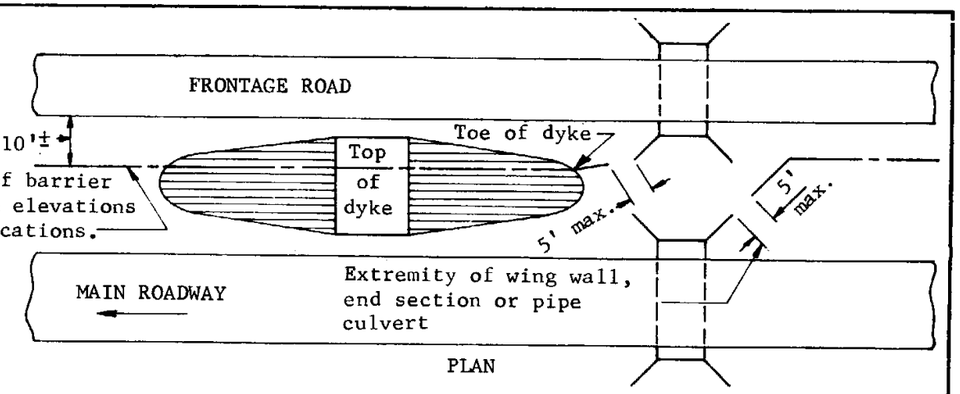

PLAN

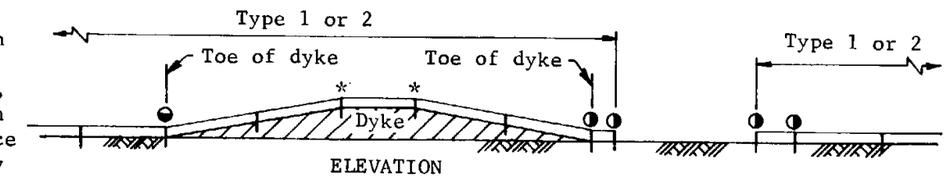

ELEVATION

For Type 1 or Type 2 - 6:1 slope only

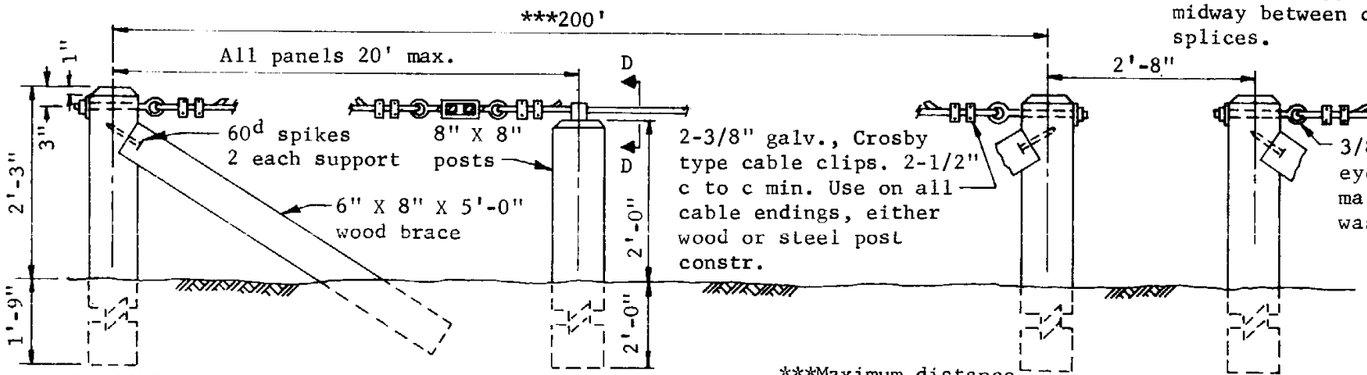

TYPE 2 BARRIER FENCE
WOOD POSTS

***Maximum distance between end post and cable splices. Place turnbuckle approximately midway between end posts.

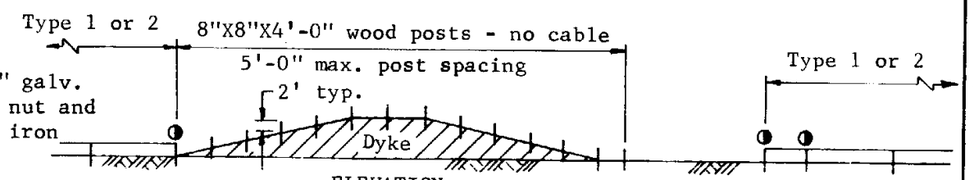

ELEVATION

For slopes steeper than 6:1

* Required location of line post
◑ Required location of end post
◒ Required location of strain post

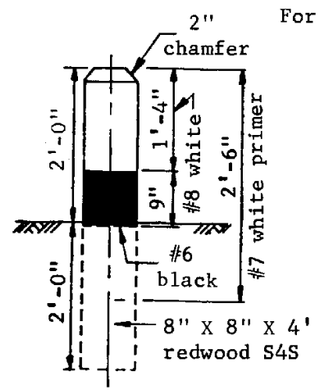

BARRIER POST

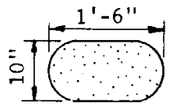

SECTION A-A

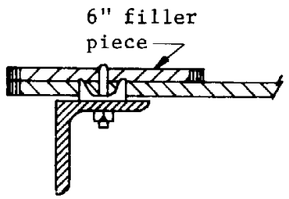

SECTION C-C

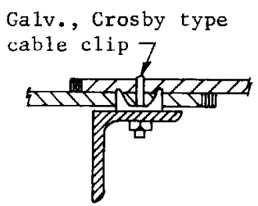

SECTION B-B

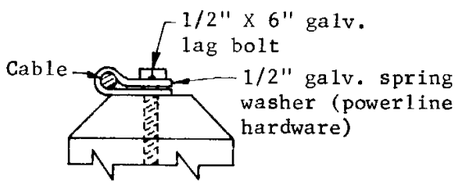

SECTION D-D

GENERAL NOTES

Concrete for posts may be job mix concrete of not less than 5 sacks per cu. yd.

Wood posts for barrier fence shall be rough, pressure treated.

Steel posts for barrier fence shall be painted green with white tops.

Barrier posts shall be S4S redwood, untreated.

All cable ends shall be wrapped with galvanized tie wire in accordance with the cable manufacturer's recommendations.

Barrier fence shall be used only to prevent crossings between roadways and shall not be used where guard rail is required or where physical barriers are present.

ARIZONA HIGHWAY DEPARTMENT CONSTRUCTION SECTION		Rev 3/71 5/72
BARRIER FENCE & BARRIER POST		
Drawn	L.O.M.	Drawing No.
Traced		C-12.05
Checked	R.W	
Approved Asst. State Eng Const.		

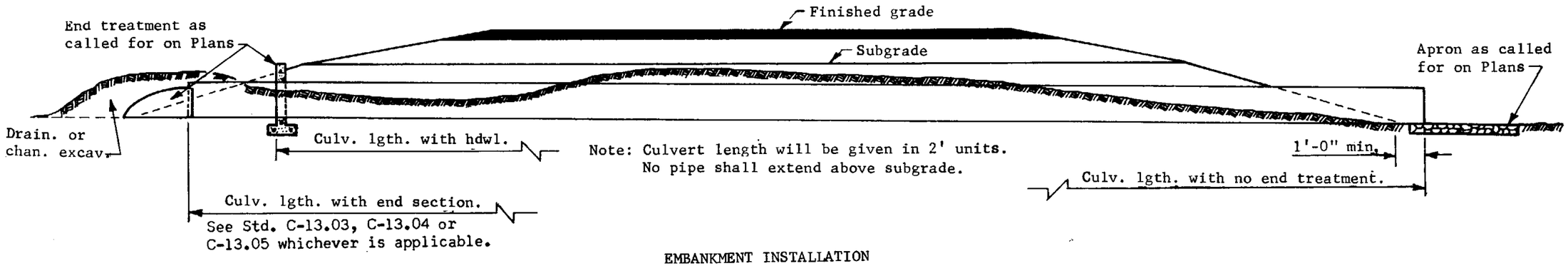

EMBANKMENT INSTALLATION

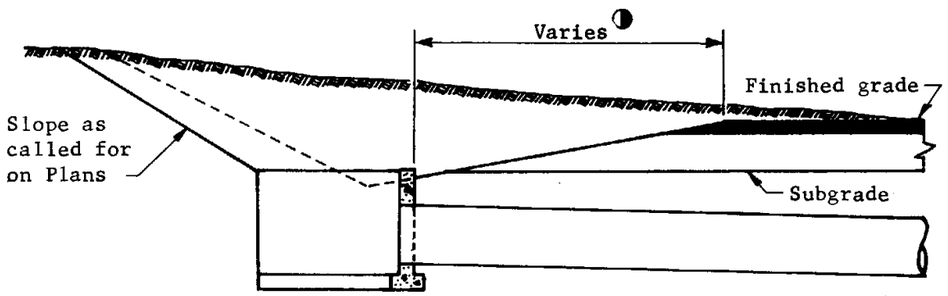

CUT INSTALLATION

◑ Width of cut ditch minus 1'-0".

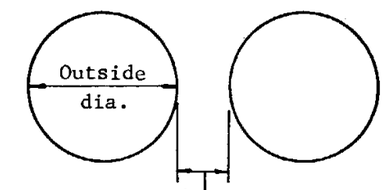

Diameter	*Minimum space between pipes
12" to 24"	1'-0"
30" to 66"	One-half diameter of pipe
72" to 84"	3'-0"

*When headwalls are used, space as per headwall standard.

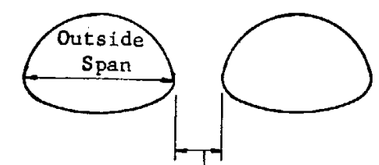

Span	Minimum space between pipe arches
18" to 36"	1'-0"
43" to 72"	One-third span of pipe arch

SPACING FOR MULTIPLE INSTALLATIONS

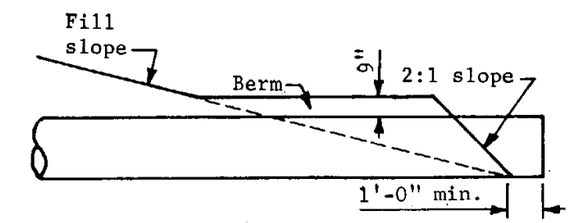

Side Elevation

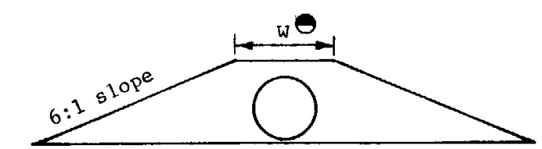

End Elevation

◓ W for outlet end = 4' + pipe dia.

Berm shall be constructed as noted on plans.

GENERAL NOTES

Additional excavation shall be required, as shown in Figure A, when headwalls are located in a cut ditch.

Headwall shall not extend more than 3" above the embankment slope and in no case above the shoulder elevation.

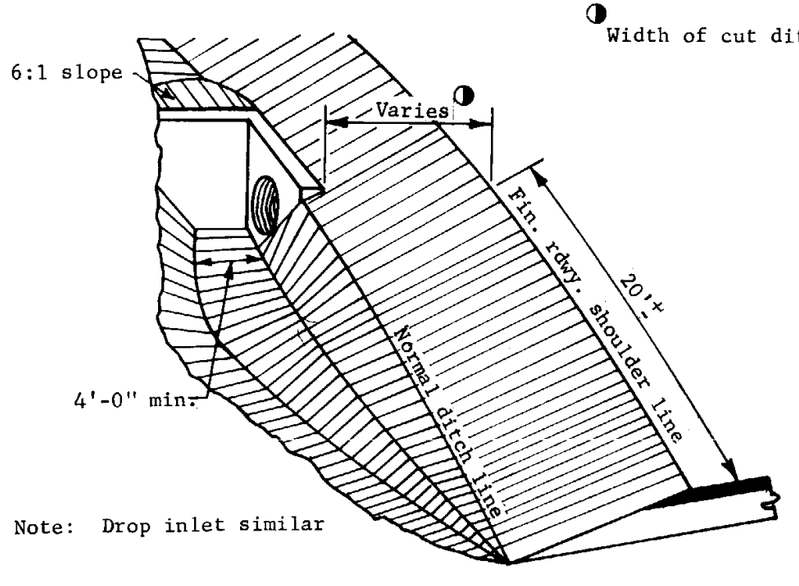

Note: Drop inlet similar

FIGURE A

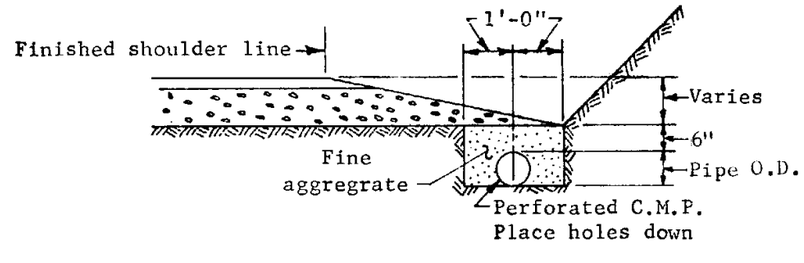

PERFORATED C.M.P. INSTALLATION

ARIZONA HIGHWAY DEPARTMENT CONSTRUCTION SECTION		Rev 12-2-68 3-71
PIPE CULVERT INSTALLATION		
Drawn	D.G. 3-68	Drawing No.
Traced	D.G. 3-68	C-13.01
Checked	J.P.O. 5-68	
Approved Asst. State Eng Const.	E. Handelin	

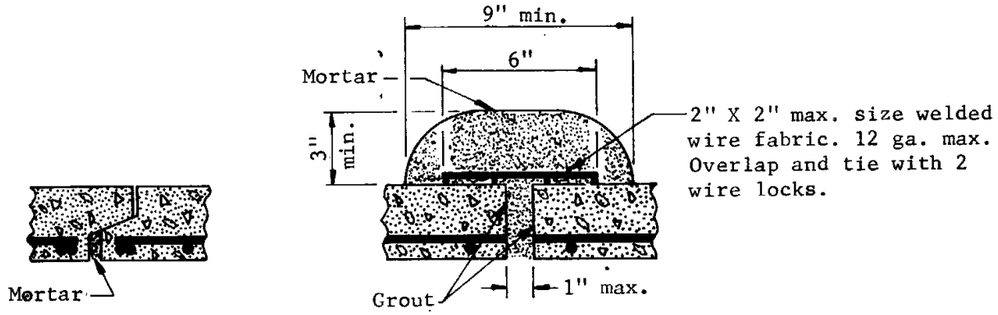

TONGUE AND GROOVE

BUTT
(Broken ends)

MORTAR JOINTS

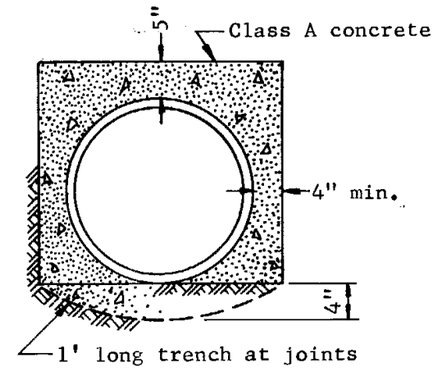

CONCRETE ENCASEMENT

GENERAL NOTES

Rubber gasketed joints shall be used on irrigation and storm sewer lines unless mortar joints are specified.

Cross drains with tongue and groove joints will not be require external mortar band.

For minimum cover and maximum fill heights on concrete pipes, refer to Std. C-13.03.

Bedding material shall be placed to spring line on both sides of pipe.

6" min. for pipe in trench.
3" min. for pipe on natural ground.
1'-0" min . & 3/4 O.D. max for pipe on solid rock or other unyielding material.

Bedding Material.

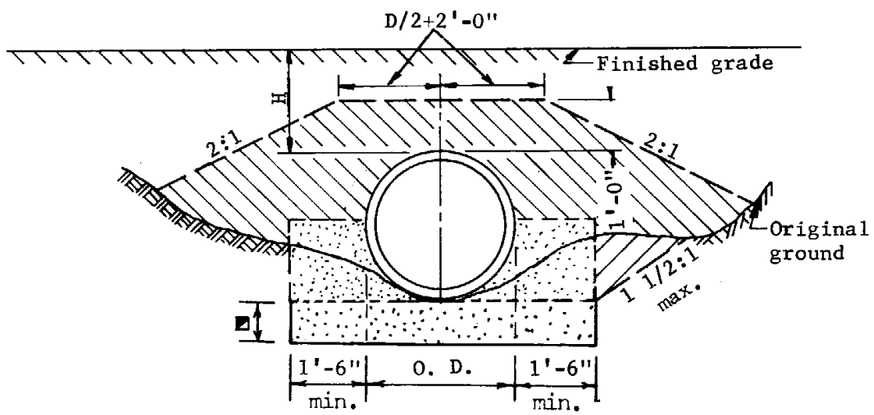

TYPE 1 - POSITIVE PROJECTING

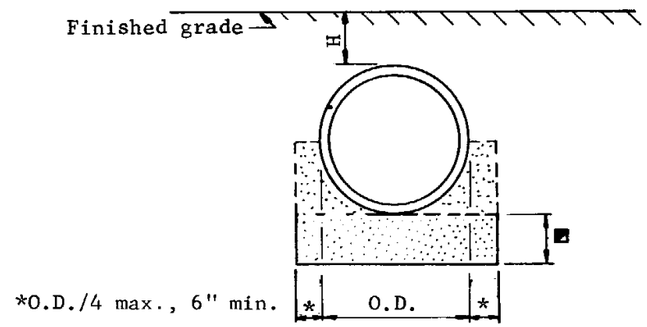

SOLID ROCK OR OTHER UNYIELDING MATERIAL

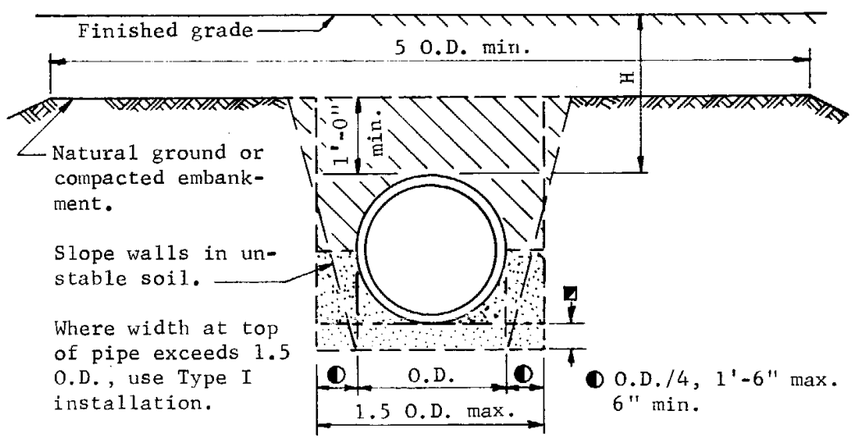

TYPE 2 - NEGATIVE PROJECTING

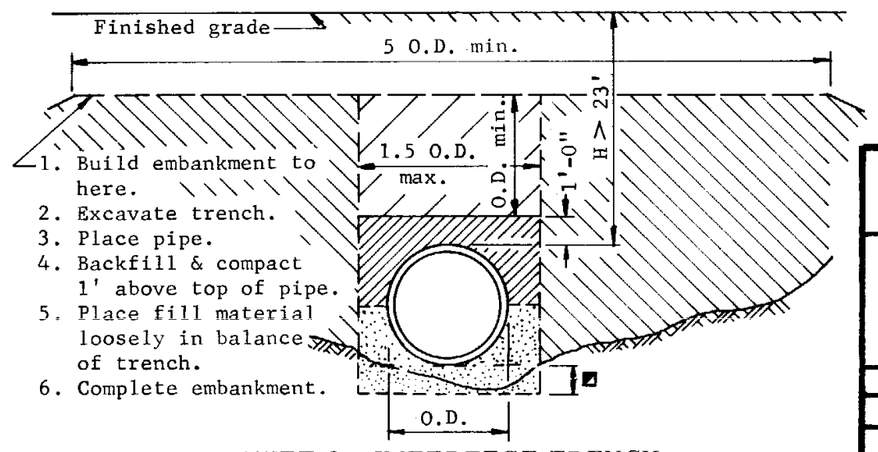

TYPE 3 - IMPERFECT TRENCH

ARIZONA HIGHWAY DEPARTMENT
CONSTRUCTION SECTION

REINFORCED CONCRETE PIPE PLACEMENT

Drawn	R.E.W	Drawing No.
Traced	JAW	C-13.02
Checked	R.W.	
Approved Asst. State Eng. Const.	E.F. Sandler	

Rev
12/9/68
2/5/71
3/72
2/73

HORIZONTAL ELLIPTICAL PIPE

Size	Area of Open'g	HE II Crack D Load 1000			HE III Crack D Load 1350			HE IV Crack D Load 2000		
		Min.	Type (1)	Type (2)	Min.	Type (1)	Type (2)	Min.	Type (1)	Type (2)
14 x 23	1.8				2	13	20	1	20	NL
19 x 30	3.3				2	13	15	1	20	NL
22 x 34	4.1				2	13	15	1	20	40
24 x 38	5.1	2	10	10	2	13	15	1	20	30
27 x 42	6.3	2	10	10	2	13	13	1	20	25
29 x 45	7.4	2	10	10	2	13	13	1	20	25
32 x 49	8.8	2	10	10	1	13	13	1	20	22
34 x 53	10.2	2	10	10	1	13	13	1	20	22
38 x 60	12.9	2	10	10	1	13	13	1	20	22
43 x 68	16.6	1	10	10	1	13	13	1	20	22
48 x 76	20.5	1	10	10	1	13	13	1	20	22
53 x 83	24.8	1	10	10	1	13	13	1	20	22
58 x 91	29.5	1	10	10	1	13	13	1	20	22
63 x 98	34.6	1	10	10	1	13	13	1	20	22
68 x106	40.1	1	10	10	1	13	13	1	20	22

VERTICAL ELLIPTICAL PIPE

Size	Area of Open'g	VE II Crack D Load 1000			VE III Crack D Load 1350				VE IV Crack D Load 2000				VE V Crack D Load 3000				VI Crack D Load 4000			
		Min.	Type (1)	Type (2)	Min.	Type (1)	Type (2)	Type (3)	Min.	Type (1)	Type (2)	Type (3)	Min.	Type (1)	Type (2)	Type (3)	Min.	Type (1)	Type (2)	Type (3)
45 x 29	7.4	2	15	15	2	23	40	88	1	35	NL	NL	1	NL	NL	NL	1	NL	NL	NL
49 x 32	8.8	2	15	15	2	18	30	78	1	28	NL	NL	1	NL	NL	NL	1	NL	NL	NL
53 x 34	10.2	2	15	15	2	18	25	70	1	27	NL	85	1	NL	NL	NL	1	NL	NL	NL
60 x 38	12.9	2	15	15	2	18	20	70	1	27	55	80	1	65	NL	NL	1	75	NL	NL
68 x 43	16.6	2	15	15	2	18	20	70	1	27	40	80	1	50	NL	NL	1	55	NL	NL
76 x 48	20.5	2	15	15	2	18	18	70	1	27	35	77	1	40	NL	NL				
83 x 53	24.8	2	15	15	2	18	18	70	1	27	30	77	1	35	NL	NL				
91 x 58	29.5	2	15	15	2	18	18	70	1	27	30	74								
98 x 63	34.6	2	15	15	2	18	18	70	1	27	30	74								
106 x 68	40.1	2	15	15	2	18	18	70	1	27	30	74								

NOTE: NL indicates no limit.

ROUND PIPE

Size	Area of Open'g	CLASS I Crack D Load 800			CLASS II Crack D Load 1000			CLASS III Crack D Load 1350				CLASS IV Crack D Load 2000				CLASS V Crack D Load 3000			
		Min.	Type (1)	Type (2)	Min.	Type (1)	Type (2)	Min.	Type (1)	Type (2)	Type (3)	Min.	Type (1)	Type (2)	Type (3)	Min.	Type (1)	Type (2)	Type (3)
12	0.8	3	8	9	3	11	14	3	40	NL	NL	2	NL	NL	NL	1	NL	NL	NL
15	1.2	3	8	9	3	11	14	3	30	NL	NL	2	60	NL	NL	1	NL	NL	NL
18	1.8	3	8	9	3	11	14	3	25	NL	NL	2	40	NL	NL	1	NL	NL	NL
21	2.4	3	8	9	3	11	14	2	20	30	44	1	30	NL	NL	1	NL	NL	NL
24	3.1	3	8	9	3	11	11	2	15	20	39	1	25	NL	NL	1	NL	NL	NL
30	4.9	3	8	9	3	11	11	2	15	20	35	1	23	NL	65	1	60	NL	NL
36	7.1	3	8	9	3	11	11	2	15	15	35	1	23	40	62	1	45	NL	NL
42	9.6	3	8	9	2	11	11	2	15	15	35	1	23	30	62	1	35	NL	NL
48	12.6	3	8	9	2	11	11	2	15	15	35	1	23	26	59	1	32	NL	100
54	15.9	3	8	9	2	11	11	2	15	15	35	1	23	24	59	1	32	60	95
60	19.6	3	8	9	2	11	11	2	15	15	35	1	23	23	57	1	32	48	90
66	23.8	3	8	9	2	11	11	2	15	15	35	1	23	23	57	1	32	47	85
72	28.3	3	8	9	2	11	11	2	15	15	35	1	23	23	57	1	32	43	85
78	33.2	3	8	9	2	11	11	2	15	15	35	1	23	23	57	1	32	43	85
84	38.5	3	8	9	2	11	11	2	15	15	35	1	23	23	57	1	32	43	85
90	44.2	3	8	9	2	11	11	2	15	15	34	1	23	23	56	1	32	43	85
96	50.3	3	8	9	2	11	11	2	15	15	33	1	23	23	54	1	32	43	80
102	56.7	3	8	9	2	11	11	2	15	15	31	1	23	23	52	1	32	43	80
108	63.6	3	8	9	2	11	11	2	15	15	30	1	23	23	50	1	32	43	80

GENERAL NOTES

All fill heights are measured in feet from finished grade to top of pipe.

Minimum fill heights shall be as noted except no pipe shall extend above subgrade.

For cases not covered hereon, special designs may be prepared.

Type refers to type of placement.

For other details see Std. C-13.02.

ARIZONA HIGHWAY DEPARTMENT
PLANS DIVISION

Rev

FILL HEIGHTS FOR REINFORCED CONCRETE PIPE

Drawn	J.P.O. 7-65	Drawing No.
Traced	S.L.T. 8-67	C-13.03
Checked	J.P.O. JPO 5-68	
Approved Engr. Plans	G Weidecker 5-68	

PIPE DIA.	APPROX. WEIGHT	DIMENSIONS - INCHES						APPROX. SLOPE
		T	A	B	C	E	F	
24	1520#	3	9½	43½	30	73½	48	3
27	1930#	3¼	10½	49½	24	73½	54	3
30	2190#	3½	12	54	19¾	73¾	60	3
36	4100#	4	15	63	34¾	97¾	72	3
42	5380#	4½	21	63	35	98	78	3
48	6550#	5	24	72	26	98	84	3
54	8240#	5½	27	65	33¼	98¼	90	2½

GENERAL NOTES

Design of end section shall conform to standards for reinforced concrete pipe.

End section joint conformation shall match the pipe joints.

Embankment slope shall be warped to match slope of end section.

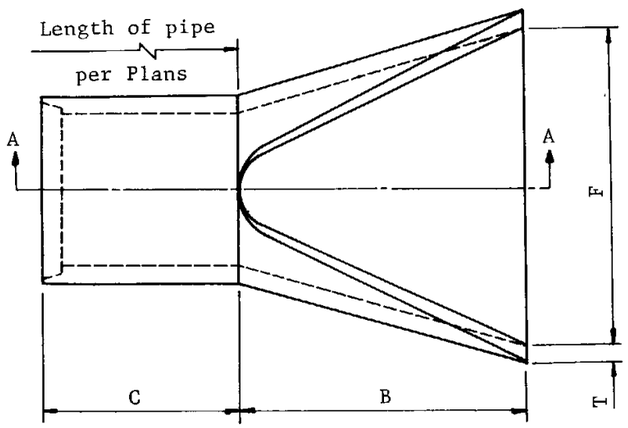

PLAN

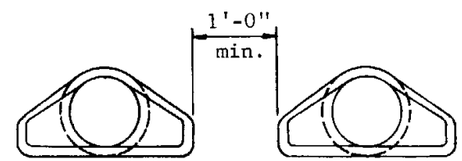

SPACING FOR MULTIPLE INSTALLATION

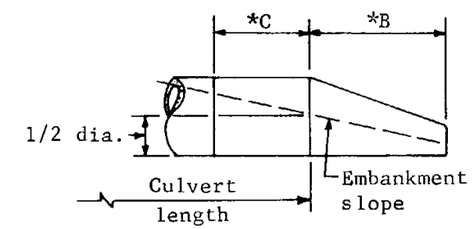

Right Angle Culvert

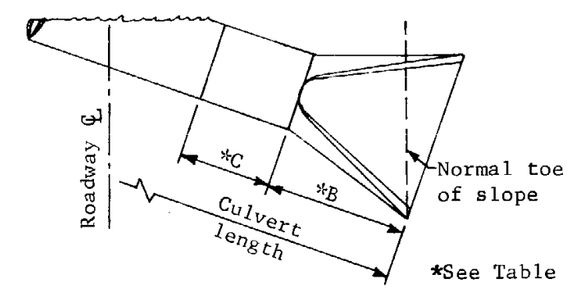

Skewed Culvert

CULVERT LENGTH AS SHOWN ON PLANS

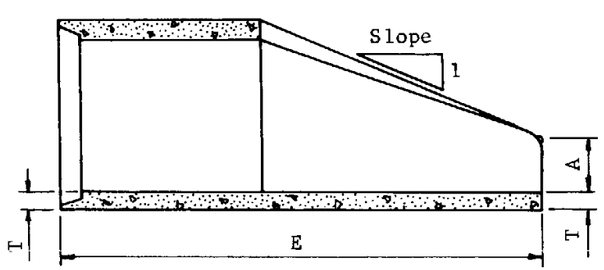

SECTION A-A

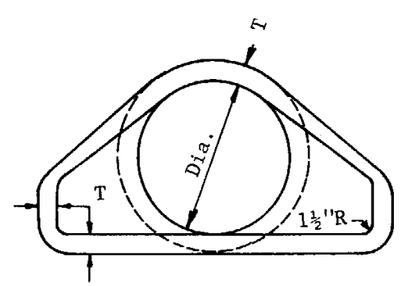

FRONT ELEVATION

ARIZONA HIGHWAY DEPARTMENT
PLANS DIVISION

Rev

END SECTION REINFORCED CONCRETE PIPE

Drawn	D.G. - 4-67	Drawing No.
Traced	S.L.T. - 5-67	
Checked	J.P.O. JPO 5-68	C-13.04
Approved Engr. Plans	G Weidner 5-68	

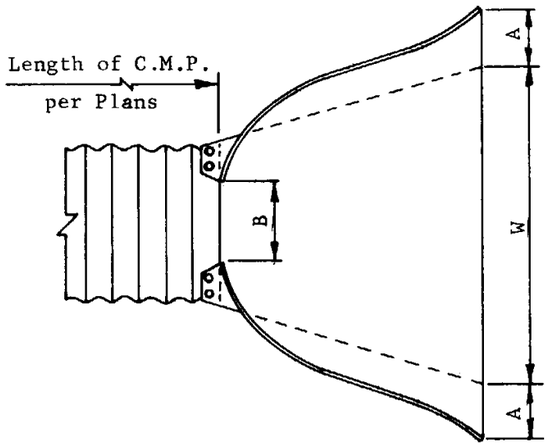

PIPE DIA.	GA.	DIMENSIONS - INCHES A ±1	B Max.	H ±1	L ±1½	W ±2	APPROX. SLOPE	CONNECTION TYPE
18"	16	8	10	6	31	36	2 1/2	1,2,3,4
24	16	10	13	6	41	48	2 1/2	1,2,3,4
30	14	12	16	8	51	60	2 1/2	1,2,4
36	14	14	19	9	60	72	2 1/2	1,2,4
42	12	16	22	11	69	84	2 1/2	1
48	12	18	27	12	78	90	2 1/4	1
54	12	18	30	12	84	102	2	1
60	12,10	18	33	12	87	114	1 3/4	1
66	12,10	18	36	12	87	120	1 1/2	1
72	12,10	18	39	12	87	126	1 1/3	1
78	12,10	18	42	12	87	132	1 1/4	1
84	12,10	18	45	12	87	138	1 1/6	1

PIPE ARCH SPAN	RISE	GA.	DIMENSIONS - INCHES A ±1	B Max.	H ±1	L ±1½	W ±2	APPROX. SLOPE	CONNECTION TYPE
29	18	16	9	14	6	32	48	2 1/2	1,2,3,4
36	22	14	10	16	6	39	60	2 1/2	1,2,4
43	27	14	12	18	8	46	75	2 1/2	1,2,4
50	31	12	13	21	9	53	85	2 1/2	1
58	36	12	18	26	12	63	90	2 1/2	1
65	40	12	18	30	12	70	102	2 1/2	1
72	44	12	18	33	12	77	114	2 1/4	1

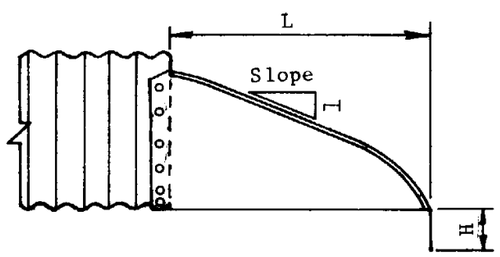

END SECTION DIMENSIONS
Showing Type 1 Riveted or Bolted Connections

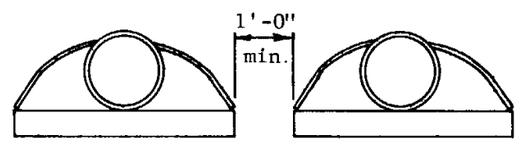

MULTIPLE INSTALLATION SPACING

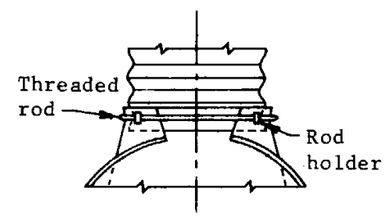

TYPE 2

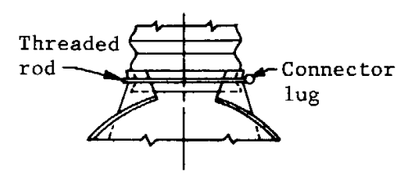

TYPE 3

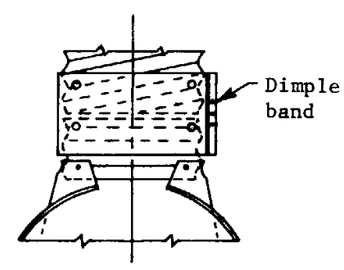

TYPE 4

GENERAL NOTES

The end section may be joined to the pipe, pipe arch or connector section by bolts, rivets, dimpled bands or threaded rod type fasterners. For allowable connection types, see table.

For the Type 1 connection, maximum allowable spacing shall be 1' - 0" with a minimum of 8 bolts or rivets per joint. 3/8" bolts or rivets shall be used for pipe sizes 18" through 42". 48" and 54" sizes shall use 1/2" bolts or rivets and 3/4" bolts shall be used for 60" and over.

Use Type 2 or 3 connections only on annular pipe or helical pipe with an annular end groove.

The foregoing applies to corresponding area arches.

All components of the end section shall be galvanized.

Embankment slope shall be warped to match slope of end section.

When pipe is exposed beyond normal embankment slope, a covering berm shall be added. See Std. C-13.01.

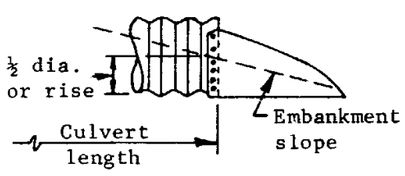

Right Angle Culvert

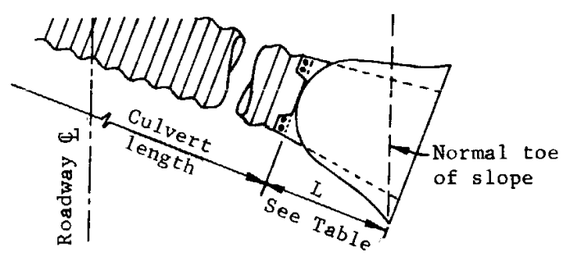

Skewed Culvert

CULVERT LENGTH AS SHOWN ON PLANS

ARIZONA HIGHWAY DEPARTMENT
PLANS DIVISION

Rev 4-28-70

END SECTION CORRUGATED METAL PIPE AND PIPE ARCH

Drawn	D.G. 4-67	Drawing No.
Traced	R.A.F. 6-67	C-13.05
Checked	J.P.O. 4-70	
Approved Engr. Plans	4-70	

TABLE I

CORRUGATED, CIRCULAR STEEL PIPE. 2-2/3" x 1/2" ANNULAR OR HELICAL CORRUGATIONS. RIVETED, WELDED OR LOCK SEAM FABRICATION. H-20 LOADING.

DIA.	14 Ga.				12 Ga.				10 Ga.				8 Ga.	
	4 1/2-Rivet/Ft		9 - Rivet/Ft.		4 1/2-Rivet/Ft		9 - Rivet/Ft.		4 1/2-Rivet/Ft		9 - Rivet/Ft		9 - Rivet/Ft	
	Min	Max	Min	Max	Min	Max	Min	Max	Min	Max	Min	Max	Min	Max
12	2	83												
15	2	66												
18	2	56			1	72								
24	2	41			1	48(54)								
30	2	33			1	37(43)								
36	2	38			1	32(36)			1	34(36)				
42			2	28(39)			2	29(58)			2	31(61)	2	32(64)
48			2	27(34)			2	28(54)			2	29(56)	2	30(59)
54			2	26(30)			2	27(48)			2	28(50)	2	28(52)
60							2	26(43)			2	27(45)	2	28(47)
66							2	26(39)			2	26(41)	2	27(43)
72											2	26(38)	2	26(39)
78											3		3	26(36)
84													3	26

14 Ga., 5/16" dia. rivets. 12, 10 and 8 Ga., 3/8" dia. rivets.

NOTE: Fill heights in parentheses are for 5% vertically elongated pipe.

TABLE II

CORRUGATED, CIRCULAR STEEL PIPE. 3" x 1" ANNULAR OR HELICAL CORRUGATIONS. RIVETED, WELDED OR LOCK SEAM FABRICATION. H-20 LOADING.

DIA.	8 - Rivet/Ft.									
	16 Ga.		14 Ga.		12 Ga.		10 Ga.		8 Ga.	
	Min.	Max.	Min.	Max.	Min.	Max.	Min.	Max.	Min.	Max.
36	2	40	2	56(53)	1	56(81)	1	65(93)	1	75(98)
42	2	34	2	38(45)	1	44(70)	1	50(80)	1	56(84)
48	3	30	2	34(39)	1	38(61)	1	42(70)	1	46(74)
54	3	26	2	31(35)	1	34(54)	1	37(62)	1	40(65)
60	3	24	2	29(32)	2	31(49)	2	33(56)	1	36(59)
66	3	22	3	28(29)	2	30(44)	2	31(51)	2	33(53)
72	3	20	3	26	2	29(41)	2	30(47)	2	31(49)
78	3	18	3	24	2	28(38)	2	29(43)	2	30(45)
84			3	23	2	27(35)	2	28(40)	2	29(42)
90			3	21	3	27(33)	3	27(37)	3	28(39)
96					3	26(31)	3	27(35)	3	27(37)
102					3	26(29)	3	27(33)	3	27(35)
108					3	26(27)	3	26(31)	3	27(33)
114							3	26(29)	3	26(31)
120							3	26(28)	3	26(29)

16 and 14 Ga., 3/8" dia. rivets. 12, 10 and 8 Ga., 7/16" dia. rivets

TABLE III

CORRUGATED, CIRCULAR STRUCTURAL PLATE STEEL PIPE. 6" x 2" CORRUGATIONS. BOLTED FABRICATION. H-20 LOADING

DIA.	4 - bolts/ft.														6-bolts/ft.		8-bolts/ft.	
	12 Ga.		10 Ga.		8 Ga.		7 Ga.		5 Ga.		3 Ga.		1 Ga.		1 Ga.		3/8" Ga.	
	Min.	Max.	Min.	Max.	Min.	Max.	Min.	Max.	Min.	Max.	Min.	Max.	Min.	Max.	Min.	Max.	Min.	Max.
60	1	39	1	57	1	66(75)	1	71(84)	1	79(103)	1	88(121)	1	96(133)	1	96(169)	1	125(248)
72	1	32	1	44(48)	1	49(62)	1	52(70)	1	56(86)	1	61(101)	1	66(110)	1	66(132)	1	83(165)
84	1	28	1	37(41)	1	40(53)	1	42(60)	1	45(74)	1	48(87)	1	51(95)	1	51(101)	1	61(122)
96	2	24	2	33(36)	2	35(47)	2	36(52)	2	38(64)	2	40(76)	2	42(83)	2	42(84)	2	49(98)
108	2	21	2	31(32)	2	32(41)	2	33(46)	2	34(57)	2	36(67)	2	37(74)	2	37(74)	2	42(84)
120	2	19	2	29	2	30(37)	2	31(42)	2	32(51)	2	33(61)	2	34(66)	2	34(67)	2	37(75)
132	3	18	3	26	3	29(34)	3	29(38)	3	30(47)	3	31(55)	3	31(60)	3	31(63)	3	34(68)
144	3	16	3	24	3	28(31)	3	28(35)	3	29(43)	3	29(51)	3	30(55)	3	30(60)	3	32(64)
156	3	15	3	22	3	27(29)	3	27(32)	3	28(40)	3	28(47)	3	29(51)	3	29(58)	3	30(61)
168	3	14	3	20	3	27	3	27(30)	3	27(37)	3	28(43)	3	28(47)	3	28(56)	3	29(59)
180	3	13	4	19	3	25	3	27(28)	3	27(34)	3	27(40)	3	27(44)	3	27(55)	3	28(57)
192			4	18	3	23	3	26	3	26(32)	3	27(38)	3	27(41)	3	27(53)	3	28(56)
204			4	17	4	22	4	25	4	26(30)	4	26(36)	4	27(39)	4	27(50)	4	27(55)
216					4	21	4	23	4	26(29)	4	26(34)	4	26(37)	4	26(47)	4	27(54)
228					4	20	4	22	4	26(27)	4	26(32)	4	26(35)	4	26(45)	4	27(53)
240							4	21	4	26	4	26(30)	4	26(33)	4	26(42)	4	26(53)
252									4	25	4	26(29)	4	26(31)	4	26(38)	4	26(52)

Bolts used for 3/8" Ga. shall be 7/8" dia.; all others 3/4" dia.. Bolts shall be torqued to manufacturer's specifications but not less than 100 ft. lbs. or more than 300 ft. lbs.

GENERAL NOTES

All fill heights are measured, in feet, from finished grade to top of pipe.

Minimum fill heights shall be as noted except no pipe shall extend above subgrade.

Fill heights above 100' shall be used only after a thorough investigation of the foundation and backfill material.

All corrugated steel pipe and appurtenant parts shall be galvanized.

For installation details, See Std. C-13.01

For fill height design data, See Std. C-13.07.

ARIZONA HIGHWAY DEPARTMENT
CONSTRUCTION SECTION

CORRUGATED METAL PIPE DESIGN FILL HEIGHTS

Drawn	J.A.W.	Drawing No.
Traced		C-13.06
Checked	R.W.	
Approved Asst. State Eng Const	E. F. Hendel	

Rev
1/71
11/71
2/73
4/73

2 2/3" X 1/2" Corrugations						3" X 1" Corrugations						6" X 2" Corrugations					
				C_u					C_u						C_u		
Gage	A_s	I	r	1 rivet	2 rivet	A_s	I	r	2-5/16 rivets	2-3/8 rivets	2-7/16 rivets	A_s	I	r	4-bolts ft.	6-bolts ft.	8-bolts ft.
16	.0646	.001892	.1726	16750	21500	.0742	.008658	.3452	19200	25800							
14	.0808	.002392	.1726	18200	29800	.0927	.010833	.3452	26500	34300							
12	.1130	.003425	.1726	23400	46800	.130	.015458	.3452		41600	53000	.1297	.060416	.688	42000		
10	.1454	.004533	.1726	24500	49000	.1674	.020175	.3452		43500	61000	.1669	.078166	.688	62000		
8	.17775	.005725	.1726	25600	51300	.2048	.025083	.3452		45600	64000	.2041	.096166	.688	81000		
7												.2283	.1078	.688	93000		
5												.2666	.126916	.688	112000		
3												.3048	.146166	.688	132000		
1												.3432	.165833	.688	144000	184000	220000
3/8"												.4680	.232	.688			270000 ◐

◐ 7/8" bolts. All other 6" X 2" C_u values are for 3/4" bolts.

Criterion 1. DEFLECTION OF PIPE

Formula* 1(a) $I(\text{for circular pipe}) = \dfrac{2.31\ R^3h - 57.3\ R^3}{26{,}800{,}000}$

Formula 1(b) I(for 5% vertically elongated pipe)=Substitute h/2 for h in 1a. Solve 1a for I and determine required gauge and corrugation from table. If 6" X 2" corrugation is indicated, solve for I in 1(b) to determine gauge required for elongated pipe. If I is negative, metal thickness required is less than the minimum tabular value.

Criterion 2. LONGITUDINAL SEAM STRENGTH

Formula 2(a) $C_a = \dfrac{Dh}{0.0046}$

Solve for C_a and determine gauge and corrugation from table of C_u values.

Criterion 3. BUCKLING OF PIPE WALL

Formula* 3(a) $f_u = 45{,}000 - 1.4547 \left[\dfrac{0.64\ R}{r}\right]^2$

Use r for the corrugation corresponding to the heaviest gauge determined by formulae 1a, 1b and 2a. Solve for f_u to determine the maximum allowable buckling stress.

Formula 3(b) $A_s = \dfrac{1.805\ Rh}{f_u}$

Solve for A_s, using f_u value determined in 3a, and select gauge and corrugation from table.

* When Deflection or Buckling is the control, an increase in the maximum h may be realized by backfilling to 95% Proctor density. This revises the applicable formulae to:

Formula 1(a) $I = \dfrac{2.08\ R^3h - 57.3\ R^3}{26{,}800{,}000}$

Formula 3(a) $f_u = 45{,}000 - 1.4547\left[\dfrac{0.44\ R}{r}\right]^2$

EXAMPLE

Given: h = 27; D = 15; R = 90

Find: Gauge and corrugation required.

Solution:

Deflection of pipe

Formula 1(a) $I = \dfrac{(2.31)(729{,}000)(27) - (57.3)(729{,}000)}{26{,}800{,}000} = 0.138$

I values in table indicate a gauge requirement, for circular pipe, of 5 in 6" X 2" corr.

Formula 1(b) $I = \dfrac{(1.155)(729{,}000)(27) - (57.3)(729{,}000)}{26{,}800{,}000} = -0.711$

The result being negative indicates a gauge requirement lighter than 12 gauge when pipe is elongated 5% vertically.

Longitudinal Seam Strength

Formula 2(a) $C_a = \dfrac{(15)(27)}{0.0046} = 88{,}000$

Referring to table, 7 gauge, 6" X 2" corr. is required.

Buckling of Pipe Wall

Formula 3(a) $f_u = 45{,}000 - 1.4547 \left[\dfrac{(0.64)(90)}{.688}\right]^2 = 34820$

Note that since a 6" X 2" corr. is indicated by the preceding results, the 6" X 2" value for r is used.

The result (allowable buckling stress) is used in the following formula 3(b) to determine gauge requirement.

Formula 3(b) $A_s = \dfrac{(1.805)(90)(27)}{34820} = 0.126$

The table indicates a gauge requirement of 12 gauge in 6" X 2" corr.

Analysis: Using vertically elongated pipe, the lightest gauge and corr. that will satisfy all requirements is 7 gauge, 6" X 2" corr. Similarly, with circular pipe the lightest gauge is 5. Since cost-wise the two are comparable, 7 ga., 6" X 2" 5% vertically elongated pipe is selected.

Criteria 1, 2 and 3 embody the factors to be investigated in the design of corrugated metal pipe culverts.

Appurtenant formulae are developed from data supplied by the B.P.R. 1966 publication titled "Corrugated Metal Pipe Culverts - Structural Design Criteria and Recommended Installation Practices." These formulae provide safety factors as follows: Criteria 1 = 3.33; Criteria 2 = 3.33 and Criteria 3 = 2.00.

Constants used are:
Embankment weight/cu. ft. = 130 lbs.
Embankment density = 90% Proctor.
Modulus of passive earth resistance = 1000 p.s.i.
Soil stiffness coefficient = 0.32.
Deflection lag factor = 1.39.
Modulus of elasticity = 29,000,000 p.s.i.

Explanation of symbols used:
A_s = Area/lin. inch of pipe in sq. inches.
C_a = Actual ring compression in lb./ft.
C_u = Allowable ring compression in lb./ft.
D = Pipe diameter in ft.
f_a = Actual buckling stress in p.s.i.
f_u = Allowable buckling stress in p.s.i.
h = Fill height; fin. grade to top of pipe in ft.
I = Moment of inertia of pipe wall in inches^4/ inch.
R = Radius of pipe in inches.
r = Radius of gyration of pipe wall in inches.

ARIZONA HIGHWAY DEPARTMENT
PLANS DIVISION

Rev 12-5-68

CORRUGATED METAL PIPE FILL HEIGHT DESIGN DATA

Drawn	D.G. 9-67	Drawing No.
Traced	S.L.T. 10-67	C-13.07
Checked	J.P.O. JPO 5-68	
Approved Engr. Plans	E.Heidecker 5-68	

TABLE 1-A

CORRUGATED, STEEL PIPE ARCH. 2 2/3" X 1/2" CORRUGATIONS. RIVETED, WELDED OR LOCK SEAM FABRICATION. H-20 LOADING

Size - In. Span X Rise	Opening Area Sq. Ft.	Corner Radius In.	Fill Heights - Ft. Maximum Corner Pressure = 4000 Lb./Sq. Ft.							
			14 Ga.-.079"		12 Ga.-.109"		10 Ga.-.138"		8 Ga.-.168"	
			Min.	Max.	Min.	Max.	Min.	Max.	Min.	Max.
18 X 11	1.1	3.5	1 1/2	12	1 1/2	12	1 1/2	12	1 1/2	12
22 X 13	1.6	4.0	1 1/2	11	1 1/2	11	1 1/2	11	1 1/2	11
25 X 16	2.2	4.0	2	10	2	10	2	10	2	10
29 X 18	2.8	4.5	2	10	2	10	2	10	2	10
36 X 22	4.4	5.0	2	9	2	9	2	9	2	9
43 X 27	6.4	5.5	2	8	2	8	2	8	2	8
50 X 31	8.7	6.0	3	7	3	7	3	7	3	7
58 X 36	11.4	7.0	3	7	3	7	3	7	3	7
65 X 40	14.3	8.0			3	8	3	8	3	8
72 X 44	17.6	9.0					4	8	4	8

GENERAL NOTES

All fill heights are measured from finished grade to top of pipe arch.

Minimum fill heights shall be as noted, except no pipe arch shall extend above the subgrade.

To determine fill heights for sizes other than those shown in the tables, use Std. C-13.09 Pipe Arch Design Data.

TABLE 2-A

STRUCTURAL PLATE PIPE ARCH. 6" X 2" Corrugations.
BOLTED FABRICATION, 4-BOLTS/FT. * H-20 LOADING

Size Span & Rise	Opening Area Sq. Ft.	Corner Radius In.	Fill Heights - Ft. Max. Corner Pressure= 4000 Lb./Sq. Ft.							
			12 Ga.		10 Ga.		8 Ga.		7 Ga.	
			Min.	Max.	Min.	Max.	Min.	Max.	Min.	Max.
6'- 1" X 4'-7"	22	18	1	15	1	15	1	15	1	15
7'- 0" X 5'-1"	28	18	1 1/2	13	1 1/2	13	1 1/2	13	1 1/2	13
7'-11" X 5'-7"	35	18	1 1/2	12	1 1/2	12	1 1/2	12	1 1/2	12
8'-10" X 6'-1"	43	18	1 1/2	10	1 1/2	10	1 1/2	10	1 1/2	10
9'- 9" X 6'-7"	52	18	2	9	2	9	2	9	2	9
10'-11" X 7'-1"	61	18	2	8	2	8	2	8	2	8
11'-10" X 7'-7"	71	18			2	7	2	7	2	7
12'- 8" X 8'-1"	81	18			3	6	3	6	3	6

* Bolts shall be torqued to manufacturers specifications but not less than 100 ft. lbs. nor greater than 300 ft. lbs

ARIZONA HIGHWAY DEPARTMENT
CONSTRUCTION SECTION

Rev 1-11-71

CORRUGATED METAL PIPE ARCH DESIGN FILL HEIGHTS

Drawn	D.G.	Drawing No.
Traced	S.L.T.	C-13.08
Checked	J.P.O.	
Approved Asst. State Eng Const.	E F Sandlin	

TABLE I

Gage	2 2/3" X 1/2" Corrugations A_s	I	r	C_u 1 rivet	C_u 2 rivet	6" X 2" Corrugations A_s	I	r	C_u 4-bolts ft.	C_u 6-bolts ft.	C_u 8-bolts ft.
16	.0646	.001892	.1726	16750	21500						
14	.0808	.002392	.1726	18200	29800						
12	.1130	.003425	.1726	23400	46800	.1297	.060416	.688	42000		
10	.1454	.004533	.1726	24500	49000	.1669	.078166	.688	62000		
8	.17775	.005725	.1726	25600	51300	.2041	.096166	.688	81000		
7						.2283	.1078	.688	93000		
5						.2666	.126916	.688	112000		
3						.3048	.146166	.688	132000		
1						.3432	.165833	.688	144000	184000	220000

TABLE II

h or h'	L_L	L_D	L_L+L_D
1'	1800	130	1930
2'	800	260	1060
3'	600	390	990
4'	400	520	920
5'	250	650	900
6'	200	780	980
7'	175	910	1085
8'	100	1040	1140

For h=9' and over, L_L is eliminated so total load then becomes h X 130.

Criterion I CORNER PRESSURE

Formula 1 (a) $P = \frac{6S(L_L + L_D)}{R_c}$

Using h, take $(L_L + L_D)$ from Table II and solve for P. Note: If P>4000, consideration shall be given toward possible special back fill design.

Formula 1 (b) $(L_L + L_D) = \frac{667R_c}{S}$

Solve for $L_L + L_D$. Use Table II to determine h'.

Criterion 2 LONGITUDINAL SEAM STRENGTH.

Formula 2 $C_a = 1.67S\ (L_L + L_D)$

Using h, take $(L_L + L_D)$ from Table II and solve for C_a. Determine gauge and corr. by comparing C_a with C_u values in Table I.

Criterion 3 BUCKLING OF PIPE ARCH WALL

Formula 3 (a) $f_u = 22500-0.72735\ (3.84S/r)^2$

Formula 3 (b) $f_u = \frac{S(L_L + L_D)}{24A_s}$

Use r for corrugation indicated by Formula 2
Equate f_u from 3(a) in 3(b) and solve for A_S
Determine gauge and corrugation from Table I.

Criterion 4 DEFLECTION

Formula 4(a) $\Delta_u = 0.6H$

Formula 4(b) $\Delta_a = \frac{1.507hSR^3}{29{,}000{,}000\ I+61R^3}$

Use value I of heaviest gauge and corrugation required by Criteria 2 and 3. If $\Delta_u > \Delta_a$, deflection is satisfactory.

EXAMPLE:

Given: 72" X 44" Pipe Arch, h = 15, R_c = 9.

Find: Gauge, corrugation, h'

Formula 1(a) $P = \frac{6 \times 6 \times 1950}{9}$

$= 7800$

Since P> 4000 investigation of special backfill and/or corner support design is mandatory.

Formula 1(b) $(L_L + L_D) = \frac{667 \times 9}{6}$

$= 1000$

From Table II, h' = 3

Formula 2 $C_a = 1.67 \times 6 \times 1950$
$= 19550$

Referring to Table I, 12 ga., 1-rivet, 2 2/3" X 1/2" is satisfactory with respect to seam strength

Formula 3(a) $f_u = 22500 - 0.72735 \times (3.84 \times 6/.1726)^2$
$= 9620$

Formula 3(b) $9620 = \frac{6 \times 1950}{24A_s}$

$A_s = 0.0507$

Referring to Table I, value of A_s indicates a lighter gauge than that called for in Formula 2 so 12 ga., 1-rivet, 2 2/3" X 1/2" is safe from buckling.

Formula 4 (a) $\Delta_u = 0.6 \times 3.67$
$= 2.202$

$\Delta_a = \frac{1.507 \times 15 \times 6 \times (3 \times 6 + 3 \times 3.67)^3}{29{,}000{,}000 \times 0.003425 + 61 \times (3 \times 6 + 3 \times 3.67)^3}$
$= 2.08$

$\Delta_u > \Delta_a$ so deflection is satisfactory.

Criteria 1, 2, 3 and 4 embody the factors to be investigated in the design of corrugated metal pipe arch culverts.

Appurtenant formulae are condensed from data supplied by the 1967 edition of American Iron and Steel Institute's publication titled "Handbook of Steel Drainage and Highway Construction Products" and the B. P. R. 1966 publication titled "Corrugated Metal Pipe Culverts - Structural Design Criteria and Recommended Installation Practices." These formulae provide safety factors of 1, 3.33, 2 and 3.33 respectively for Criteria 1, 2, 3 and 4.

Constants used are the same as for Std. C-13.07, "Corrugated Metal Pipe Fill Height Design Data."

Explanation of variable symbols used:

A_s = Area per lin. inch of pipe arch in sq. in.
C_a = Actual ring compression in lbs./ft.
C_u = Allowable ring compression in lbs./ft.
f_u = Allowable buckling stress in p.s.i.
h = Max. fill height; fin. grade to top of pipe arch.
h' = Min. fill height; fin. grade to top of pipe arch.
I = Moment of inertia of pipe arch wall in $inches^4$/ inch
R = 3H+3S in inches
r = Radius of gyration of pipe wall in inches.
Δ_u = Allowable deflection in inches.
Δ_a = Actual deflection in inches
S = Span in ft.
H = Rise in ft.
R_c = Corner radius in inches
P = Corner pressure in lbs./sq.ft.

ARIZONA HIGHWAY DEPARTMENT
PLANS DIVISION

Rev 12-5-68

CORR. METAL PIPE ARCH FILL HEIGHT DESIGN DATA

Drawn	D.G. 10-67	Drawing No.
Traced	R.A.F. 11-67	C-13.09
Checked	J.P.O. JPO 5-68	
Approved Engr. Plans	G Weidecker 5-68	

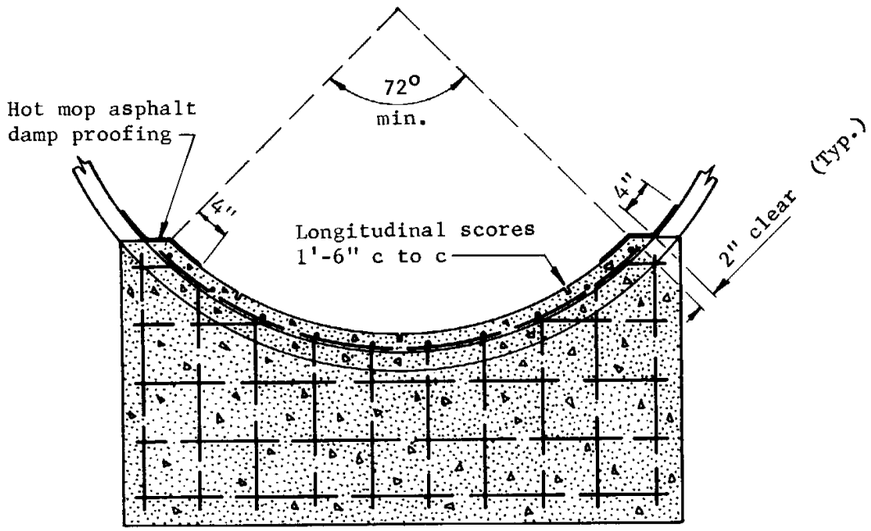

FULL CIRCULAR PIPE,
C. M. P. OR STRUCTURAL PLATE PIPE

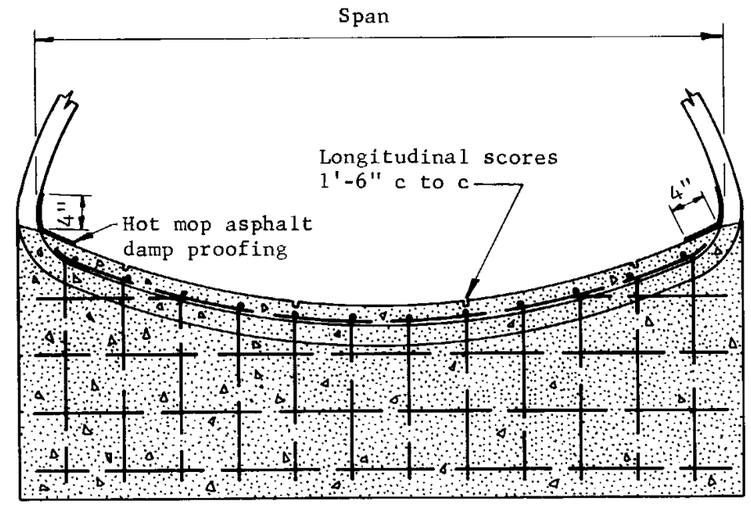

PIPE ARCH OR
STRUCTURAL PLATE ARCH

END ELEVATIONS

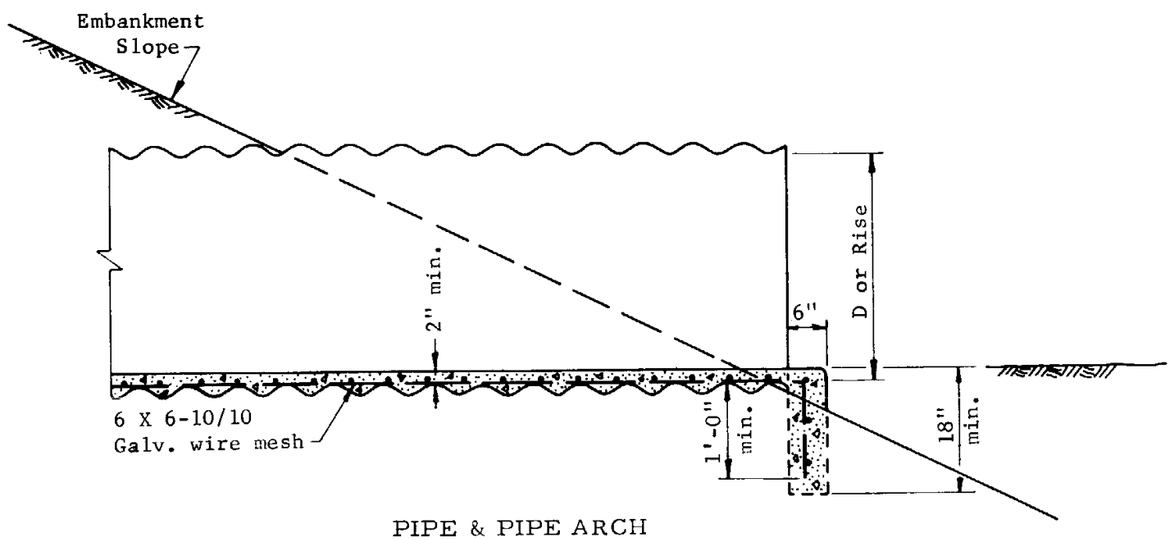

PIPE & PIPE ARCH
LONGITUDINAL SECTION

GENERAL NOTES

The wire mesh shall be fastened or welded in an approved manner to the corrugation crests.

All laps shall be 6" minimum.

Invert paving shall not be placed until fill over pipe is completed.

Concrete shall be Class A or pneumatic mortar.

ARIZONA HIGHWAY DEPARTMENT PLANS DIVISION			Rev 11-14-68
CORRUGATED METAL PIPE CONCRETE INVERT PAVEMENT			
Drawn	D.G.	Drawing No.	
Traced	R.A.F. 5-17-67		
Checked	J.P.O. JPO 5-68	C-13.10	
Approved Engr. Plans	G Weidenbach 5-68		

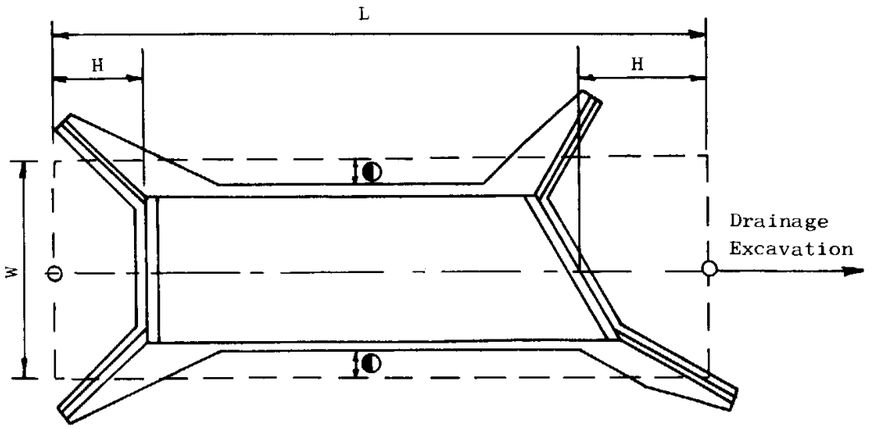

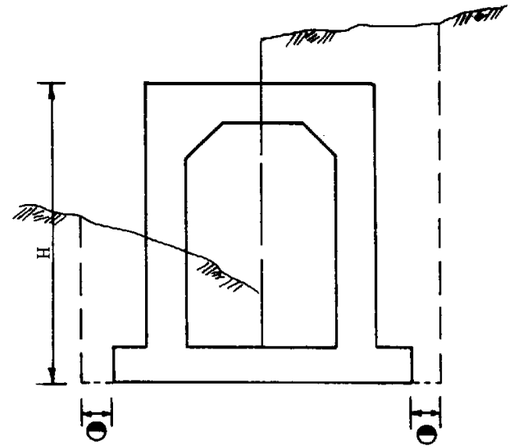

Concrete Box Culvert

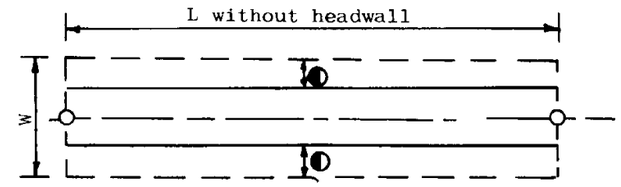

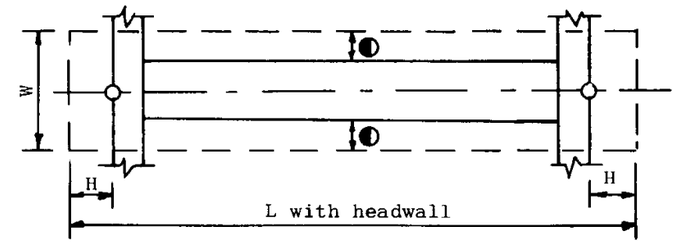

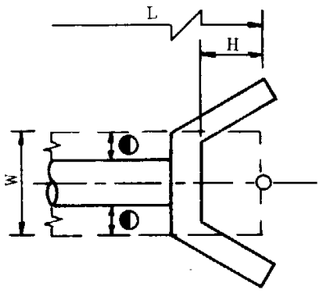

Pipe with normal wingwall, flaired end section, U headwall

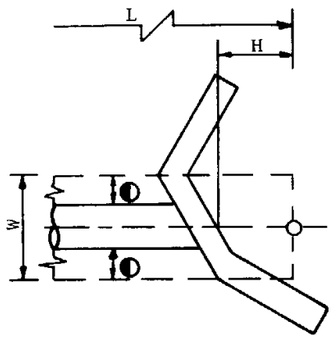

Skewed Headwall

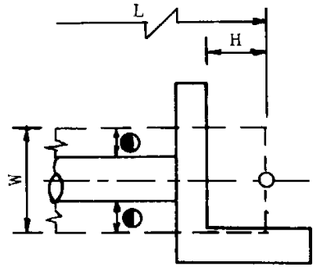

L Headwall

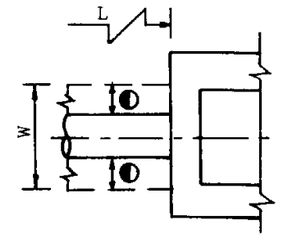

Plan Showing Catch Basin, Manhole or Similar Structure

GENERAL NOTES

Payment limits shown include structural excavation for headwalls, cutoff walls, wingwalls, end sections, etc..

Payment limits shown for multiple pipe installations shall be applied to the full width of the excavated trench allowable for structural excavation.

W Width
L Length
H Height of barrel or headwall w/o cutoff wall.

▲ See Std. C-13.01, C-13.02, C-13.04, C-13.05

O.D./4
6" min. in rock & trench
1'-6" Max. all others

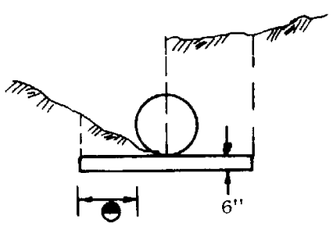

C.M.P.

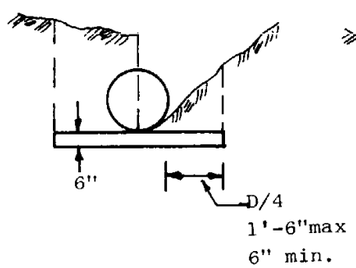

Concrete Pipe

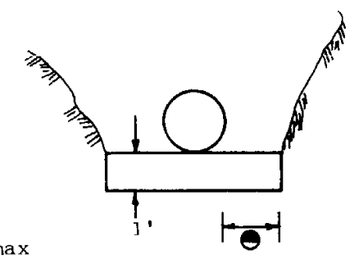

Pipe in Rock

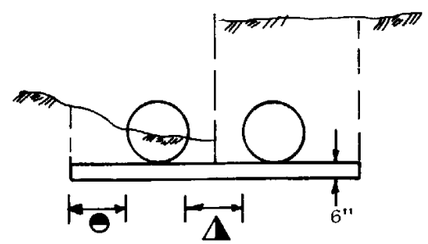

Multiple Pipe Installation

ARIZONA HIGHWAY DEPARTMENT CONSTRUCTION SECTION			Rev 12/68 3/71 5/72
STRUCTURAL EXCAVATION PAYMENT LIMITS			
Drawn	J.A.W.	Drawing No.	
Traced		C-13.11	
Checked	R.W.		
Approved Asst. State Eng Const	E.F. Sandelin		

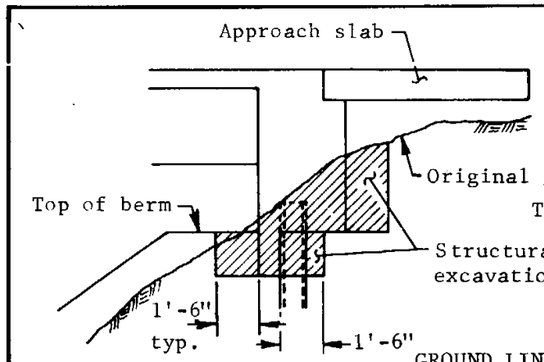

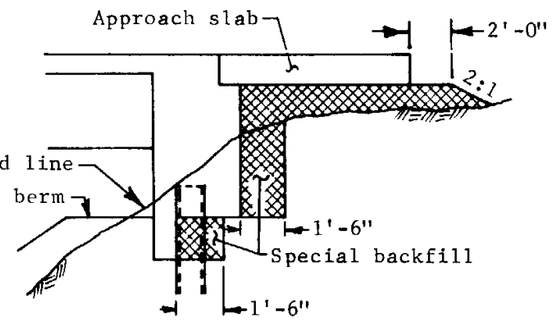

GROUND LINE ABOVE BERM

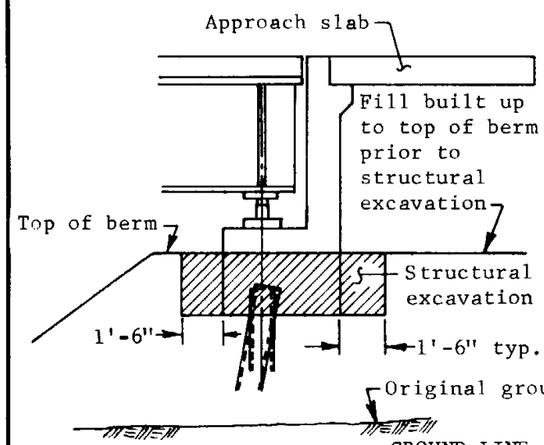

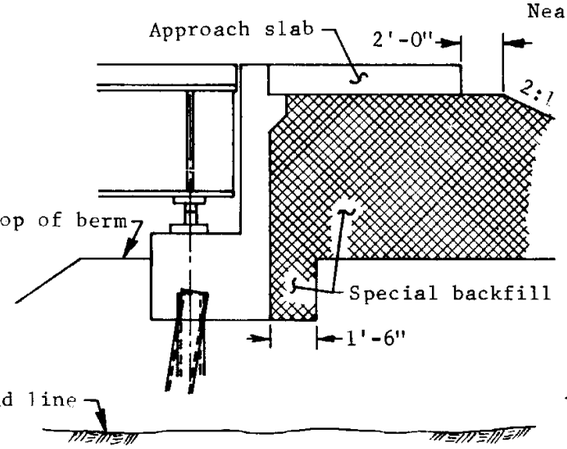

GROUND LINE BELOW BERM

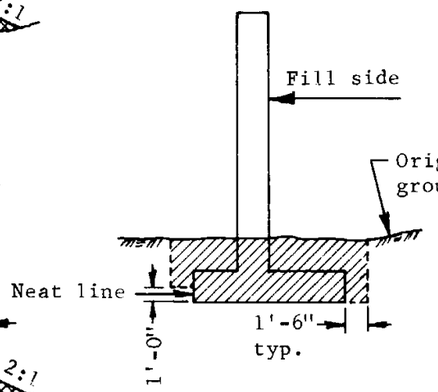

STRUCTURAL EXCAVATION
(Typical)

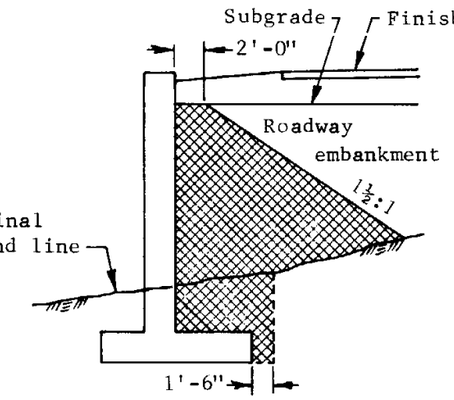

SPECIAL BACKFILL
(Roadway)

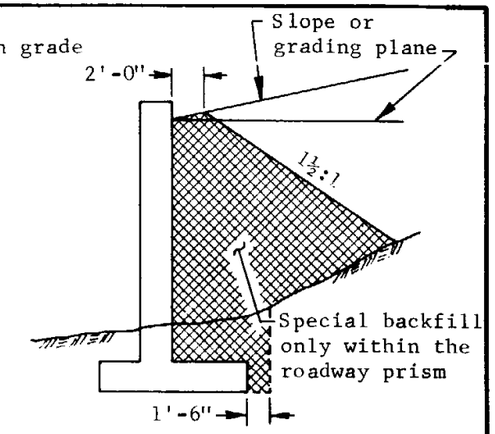

SPECIAL BACKFILL
(Wingwalls etc.)

RETAINING WALLS

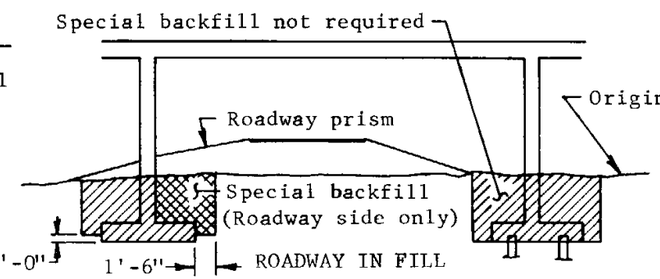

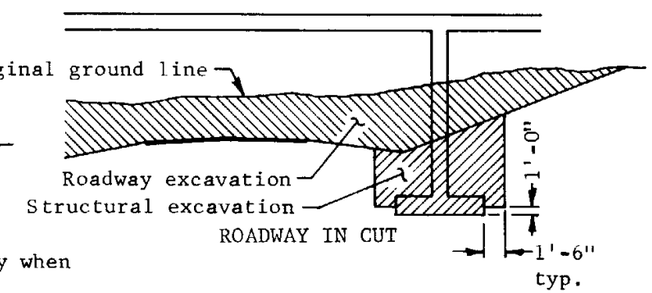

NOTE: Special backfill is required for piers only when the pier falls within the roadway prism.

LONGITUDINAL SECTIONS THRU BRIDGE

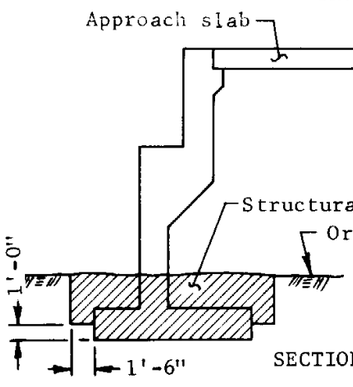

SECTION THRU WALL TYPE ABUTMENT

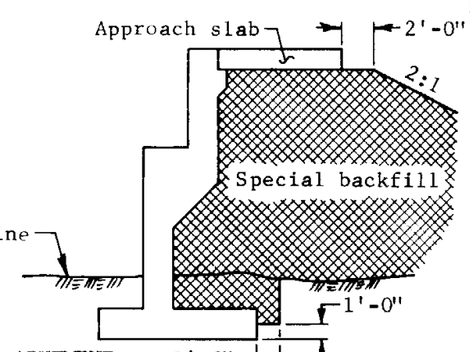

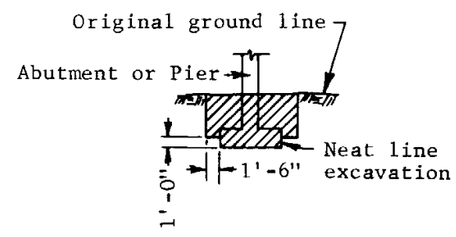

SECTION THRU TYPICAL
SPREAD FOOTING

NOTE: For any footing on piles do not use Neat Line Excavation.

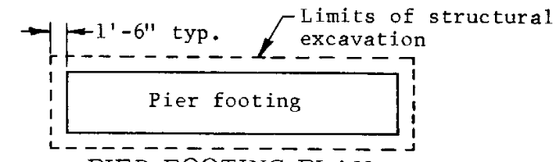

PIER FOOTING PLAN
(Showing Limits of Structural Excavation)

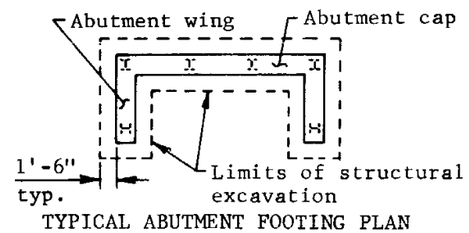

TYPICAL ABUTMENT FOOTING PLAN
(Showing Limits of Structural Excavation)

STRUCTURAL EXCAVATION
FOR ABUTMENTS

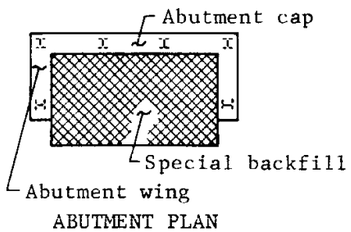

ABUTMENT PLAN
(Showing Limits of Special Backfill)

SPECIAL BACKFILL FOR ABUTMENTS

ARIZONA HIGHWAY DEPARTMENT PLANS DIVISION			Rev
STRUCTURAL EXCAVATION PAYMENT LIMITS AND SPECIAL BACKFILL PLACEMENT BRIDGES & RETAINING WALLS			
Drawn	J.R.B. 12-69	Drawing No.	
Traced	R.A.F. 1-70	C-13.12	
Checked	J.P.O. JPO 4-70		
Approved Engr. Plans	Grant Weidokey 4-70		

PLACEMENT ONLY (SEE STD. C-13.14 FOR MEASUREMENT)

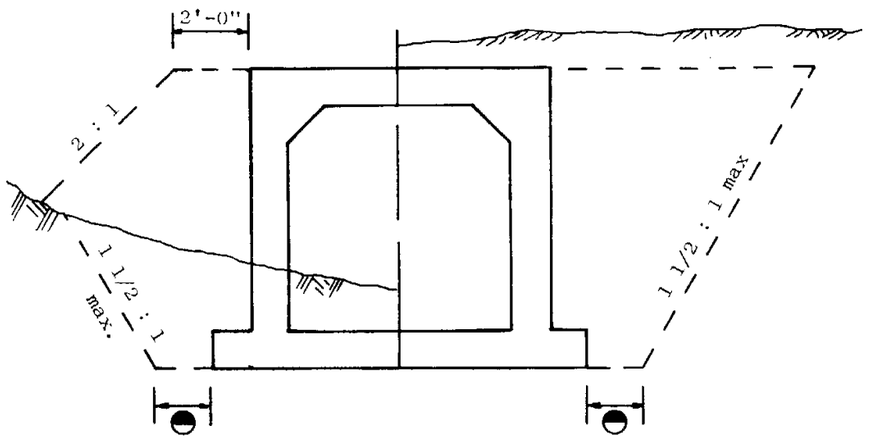

BARREL SECTION

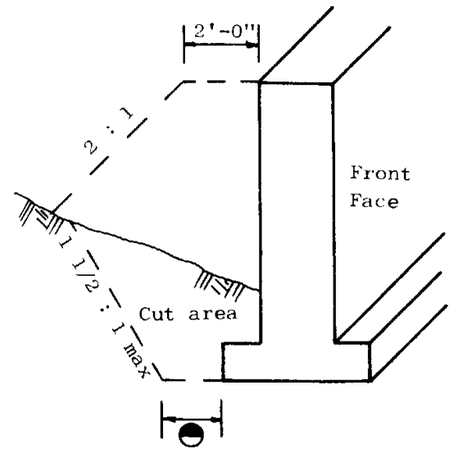

END VIEW WING OF BOX CULVERT

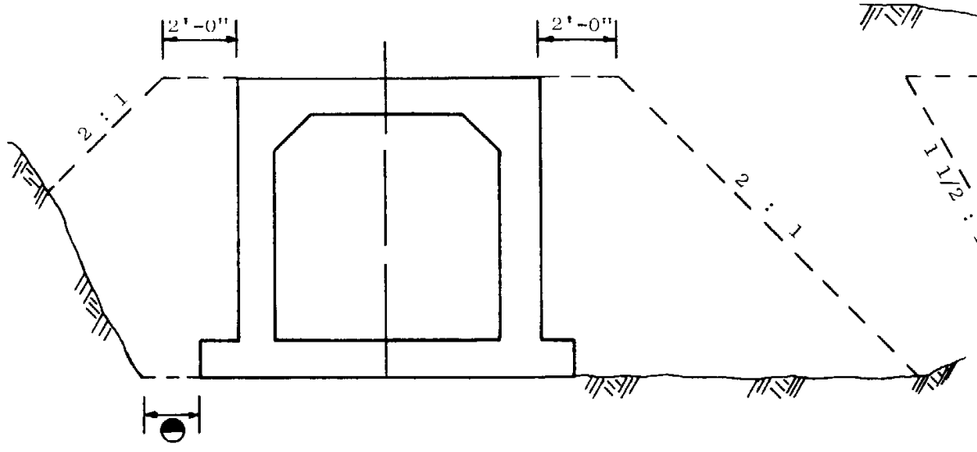

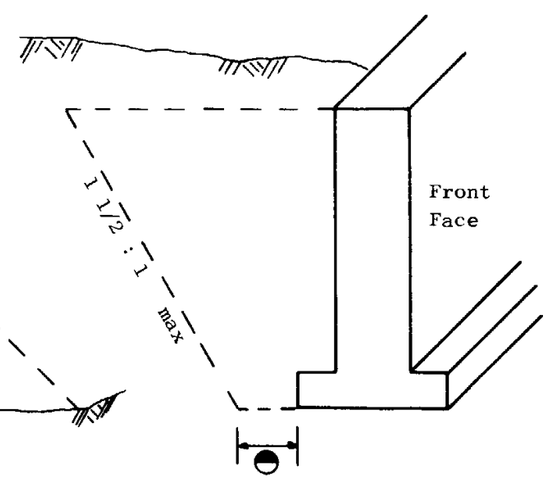

GENERAL NOTES

Bedding material placed for C.M.P. or pipe culvert on natural ground installation shall be a minimum of 3" below invert. When placed in trench bedding material shall be a minimum of 6" below invert.

Bedding material shall be placed to spring line on both sides of pipe.

Placement of special backfill around headwalls and wingwalls shall be the same as around structures.

▲ See Std. C-13.01, C-13.02, C-13.04, C-13.05

◪ D/2 + 2'-0"

◓ 6" min. in rock & trench, 1'-6" min. all others

▒ Bedding Material.

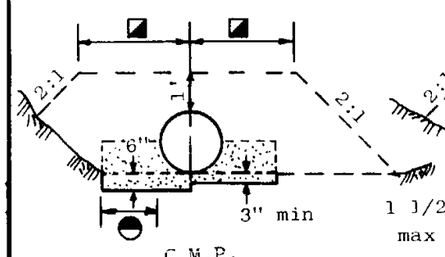

C.M.P.

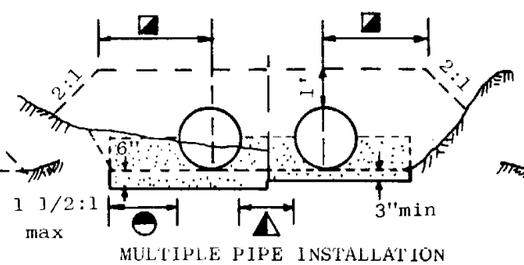

MULTIPLE PIPE INSTALLATION

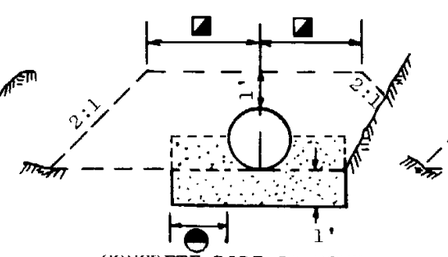

CONCRETE PIPE IN ROCK

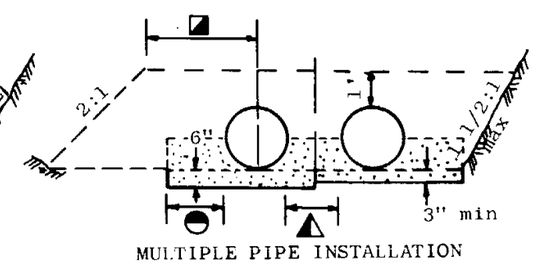

MULTIPLE PIPE INSTALLATION

ARIZONA HIGHWAY DEPARTMENT
CONSTRUCTION SECTION

Rev 5/72 2/73

SPECIAL BACKFILL PLACEMENT

Drawn	J.A.W.	Drawing No.
Traced		C-13.13
Checked	R.W.	
Approved Asst. State Eng Const.	E.F. Headlin	

MEASUREMENT ONLY (SEE STD. C-13.13 FOR PLACEMENT)

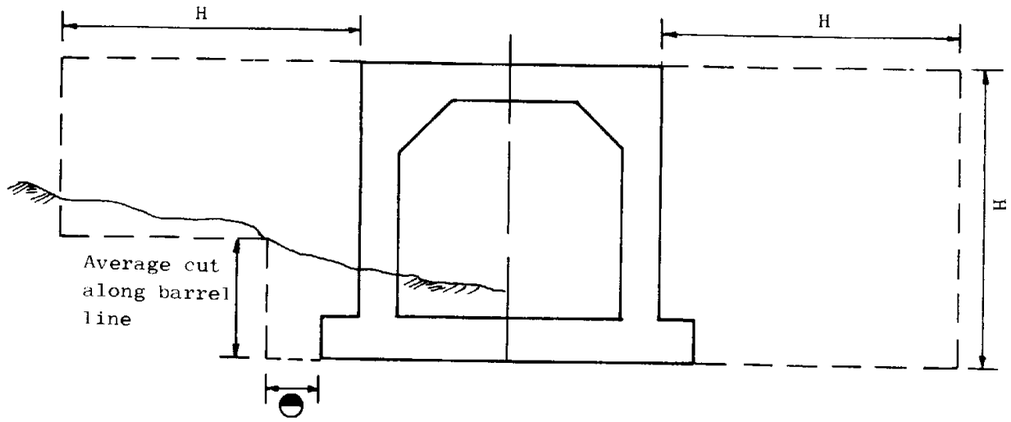

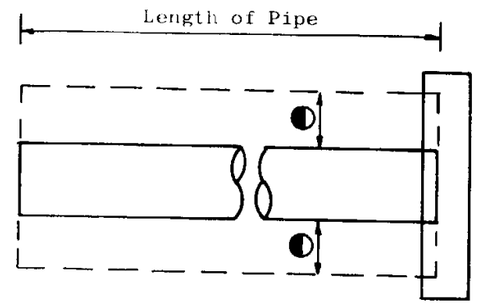

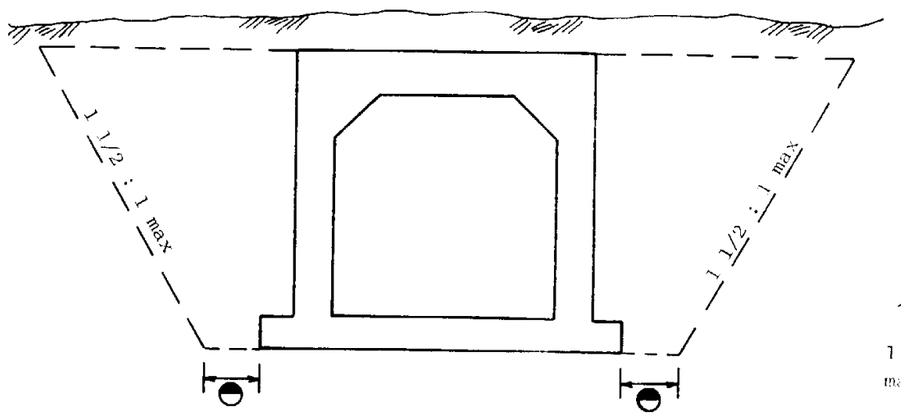

C.M.P.

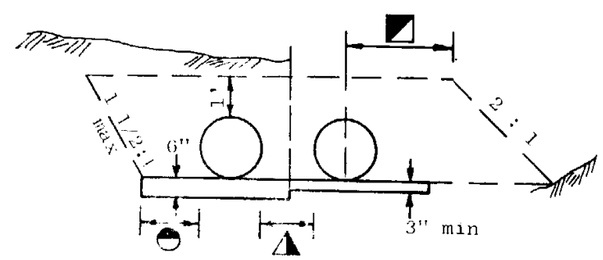

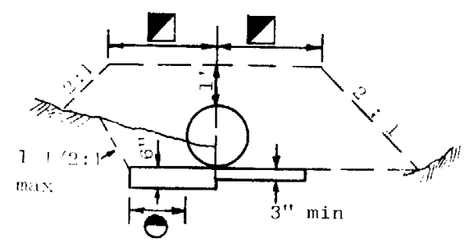

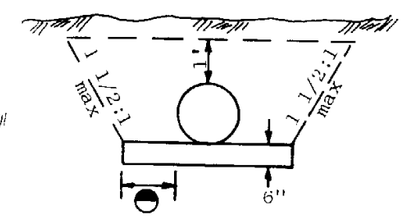

R.C.P.

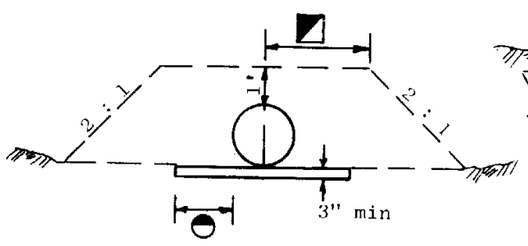

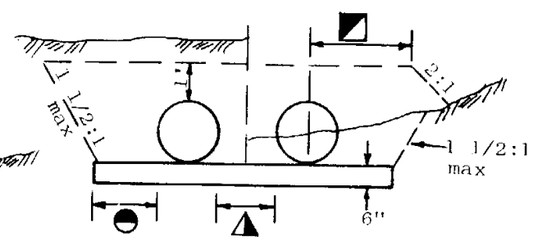

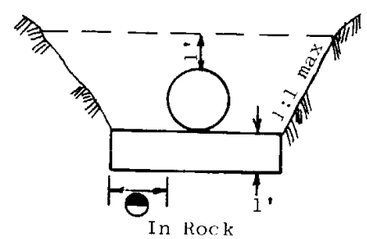

In Rock

NOTE: Computation of Special Backfill quantity for box culvert is based on the area of a typical installation times (the total length of the structure plus H). No measurement is necessary for wing areas. Use H/2 for box extensions on each end extended.

GENERAL NOTES

Measurement limits for multiple pipe installations will be taken from outside to outside limits of allowable structural excavation.

Pipe installation backfill shall be computed based on total as installed length of pipe. When, headwall or end sections are installed an allowance of H/2 will be added to the total length of pipe for each end section or headwall installed

Diameters are O.D. & maximum outside width of circular and arch type structures respectively.

H Height of barrel or headwall w/o cutoff wall.

◪ D/2 + 2' - 0"

◓ 6" min. in rock & trench
1'-6" all others

◭ See Std. C-13.01 C.M.P. & C-13.02 R.C.P. if structure includes flared end section see Std. C-13.05 C.M.P. & C-13.04 R.C.P.

ARIZONA HIGHWAY DEPARTMENT
CONSTRUCTION SECTION

Rev 5/72

SPECIAL BACKFILL MEASUREMENT

Drawn	J.A.W.	Drawing No.
Traced		C-13.14
Checked	R.W.	
Approved Asst. State Eng Const.	E F Sandelin	

DIMENSIONS									
I.D.	A	B	C	D	E	L	L+E	F	G
18"	6"	6"	1'-8"	4'-2"	2'-8"	9'-6"	12'-2"	1'-7"	4'-6"
24"	8"	8"	2'-0"	4'-8"	3'-6"	11'-6"	15'-0"	2'-1"	5'-6"
30"	8"	8"	2'-0"	5'-2"	4'-4"	13'-6"	17'-10"	2'-7"	6'-6"
36"	1'-0"	8"	2'-4"	5'-8"	5'-2"	15'-6"	20'-8"	3'-1"	7'-6"
42"	1'-1"	10"	2'-7"	6'-2"	6'-0"	17'-6"	23'-6"	3'-7"	8'-6"
48"	1'-2"	1'-0"	2'-10"	6'-8"	6'-10"	19'-6"	26'-4"	4'-1"	9'-6"

"U" HEADWALL									
I.D.	Conc. C.Y. For C.M.P.	Conc. C.Y. For Conc. Pipe	Reinf. Steel #4 Bars a		b		b_1		lbs.
			No.	Lgth	No.	Lgth	No.	Lgth	
18"	1.68	1.65	12	4'-8"	6	4'-3"	10	5'-8"	90
24"	2.37	2.33	14	5'-4"	6	5'-3"	12	6'-8"	121
30"	3.01	2.96	18	5'-10"	6	6'-3"	12	7'-8"	152
36"	3.90	3.83	20	6'-8"	6	7'-3"	14	8'-8"	194
42"	4.72	4.63	24	7'-1"	6	8'-3"	14	9'-8"	263
48"	5.91	4.79	28	7'-8"	6	9'-3"	16	10'-8"	289

"L" HEADWALL									
I.D.	Conc. C.Y. For C.M.P.	Conc. C.Y. For Conc. Pipe	Reinf. Steel #4 Bars a		b		b_1		lbs.
			No.	Lgth.	No.	Lgth.	No.	Lgth.	
18"	1.42	1.39	10	4'-8"	6	6'-9"	5	5'-8"	73
24"	2.00	1.96	12	5'-4"	6	8'-3"	6	6'-8"	97
30"	2.53	2.48	14	5'-10"	6	9'-9"	6	7'-8"	118
36"	3.27	3.20	16	6'-8"	6	11'-3"	7	8'-8"	149
42	4.04	3.95	18	7'-2"	6	12'-9"	7	9'-8"	194
48"	4.94	4.82	20	7'-8"	6	14'-3"	8	10'-8"	215

SINGLE PIPE HEADWALL							
I.D.	Conc. C.Y. For C.M.P.	Conc. C.Y. For Conc. Pipe	Reinf. Steel #4 Bars a		b		lbs.
			No.	Lgth.	No.	Lgth.	
18"	1.17	1.14	8	4'-8½"	5	9'-3"	56
24"	1.64	1.60	10	5'-4½"	5	11'-3"	74
30"	2.05	2.00	10	5'-10½"	5	13'-3"	83
36"	2.63	2.56	12	6'-8½"	5	15'-3"	105
42"	3.24	3.15	14	7'-2½"	5	17'-3"	125
48"	3.96	3.84	16	7'-8½"	5	19'-3"	147

DOUBLE PIPE HEADWALL							
I.D.	C.Y. Conc. For C.M.P.	C.Y. Conc. For Conc. Pipe	Reinf. Steel #4 Bars a		b		lbs.
			No.	Lgth.	No.	Lgth.	
18"	1.47	1.42	9	4'-8"	5	11'-11"	68
24'	2.07	2.00	11	5'-4"	5	14'-9"	88
30"	2.62	2.52	12	5'-10"	5	17'-7"	105
36"	3.40	3.27	14	6'-8"	5	20'-5"	131
42"	4.19	4.01	16	7'-2"	5	23'-3"	154
48"	5.15	4.92	17	7'-8"	5	26'-1"	175

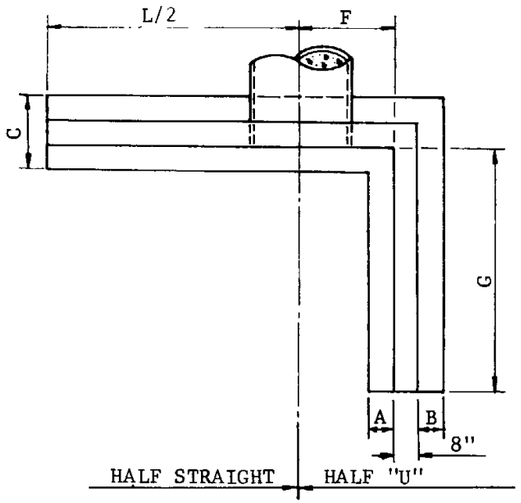

"L" HEADWALL

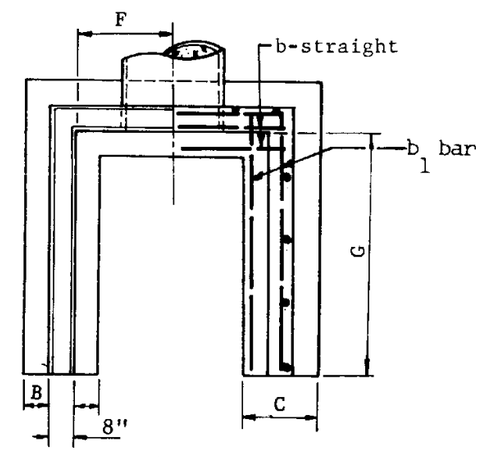

PLAN

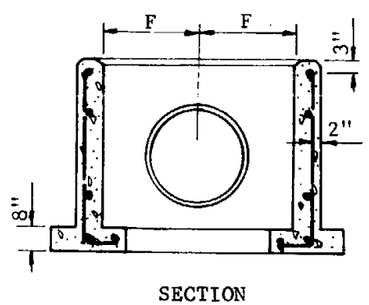

SECTION

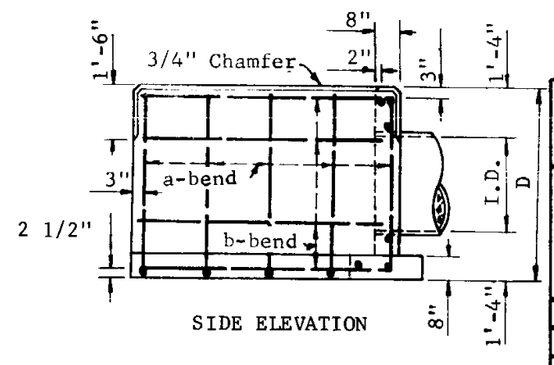

SIDE ELEVATION

"U" HEADWALL

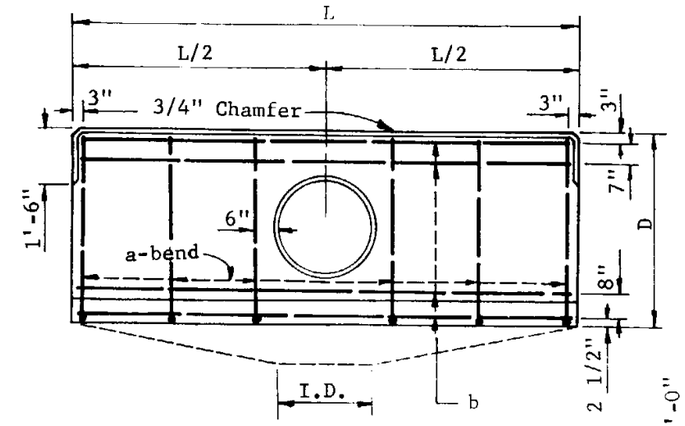

SINGLE PIPE

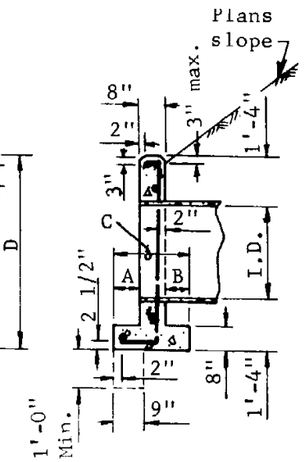

SECTION

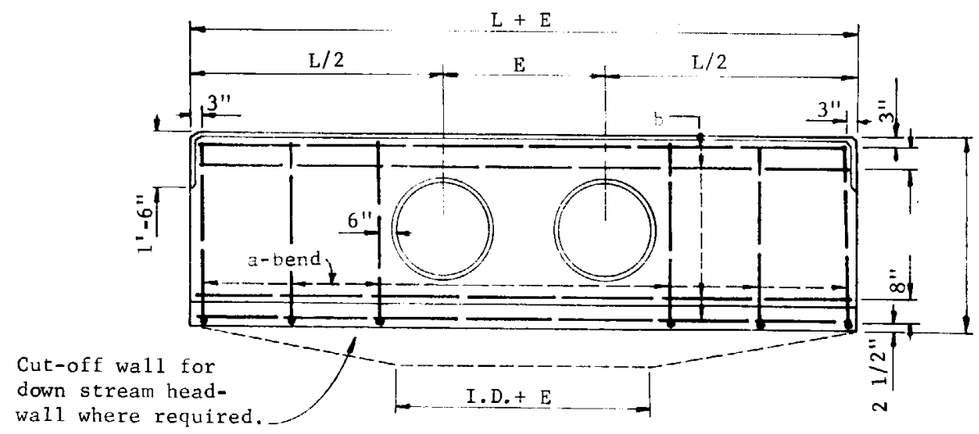

DOUBLE PIPE
STRAIGHT HEADWALLS

GENERAL NOTES
All concrete shall be Class A.
High point of headwall shall not project more than 3" above slope.

ARIZONA HIGHWAY DEPARTMENT
CONSTRUCTION SECTION

Rev 5/72

PIPE HEADWALL STRAIGHT, "L"&"U" TYPE

Drawn	L.O.M.	Drawing No.
Traced		C-14.01
Checked	R.W.	
Approved Asst. State Eng Const	G F Vandlin	

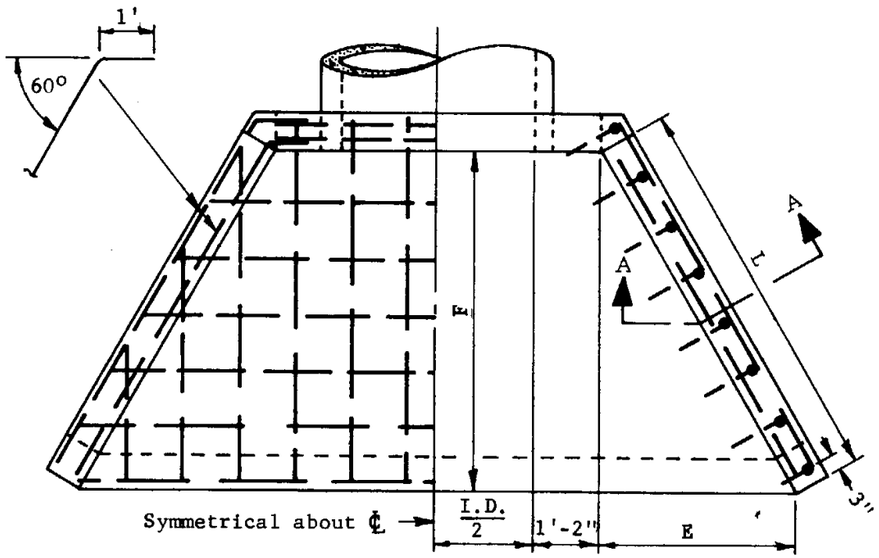

PLAN

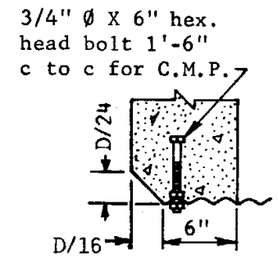

DETAIL NO. 1

Beveled dimensions common to C.M.P. and R.C.P.

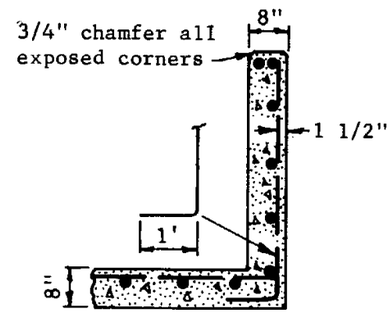

SECTION A-A

PIPE	DIMENSIONS				QUANTITIES		
					C.Y. CLASS A CONC.		
I.D.	L	E	F	X	C.M.P.	Deduct for R.C.P.	Reinf.Steel Lbs.
42"	7'-0"	3'-6"	6'-1"	2'-6"	4.45	0.09	205
48"	7'-6"	3'-9"	6'-6"	3'-0"	5.27	0.12	265
54"	8'-0"	4'-0"	6'-11"	3'-0"	5.40	0.14	295
60"	9'-0"	4'-6"	7'-10"	3'-0"	7.35	0.19	340
66'	10'-0"	5'-0"	8'-8"	3'-3"	7.88	0.23	390
72"	11'-0"	5'-6"	9'-6"	3'-3"	8.93	0.28	480
78"	11'-6"	5'-9"	10'-0"	3'-6"	10.01	0.34	490
84"	12'-0"	6'-0"	10'-5"	3'-9"	11.01	0.39	560

GENERAL NOTES

All concrete shall be Class A.

All reinforcing bars shall be #4 except two #6 bars over pipe. Bar spacing shall be 1'-0" c to c.

Plan shown is for a 42" pipe.

High point of headwall shall not project more than 3" above slope.

Skewed pipe installations shall be constructed parallel to center line of roadway. When end of metal pipe is cut to fit skew, disturbed area of pipe shall be treated in accordance with section 604-3.04 of 1969 Standard Specifications.

The bevel detail will be required only on the inlet end of structures. When reinforced concrete pipe is placed with the bell or groove end up stream flush with the headwall face, the bevel detail will not be required.

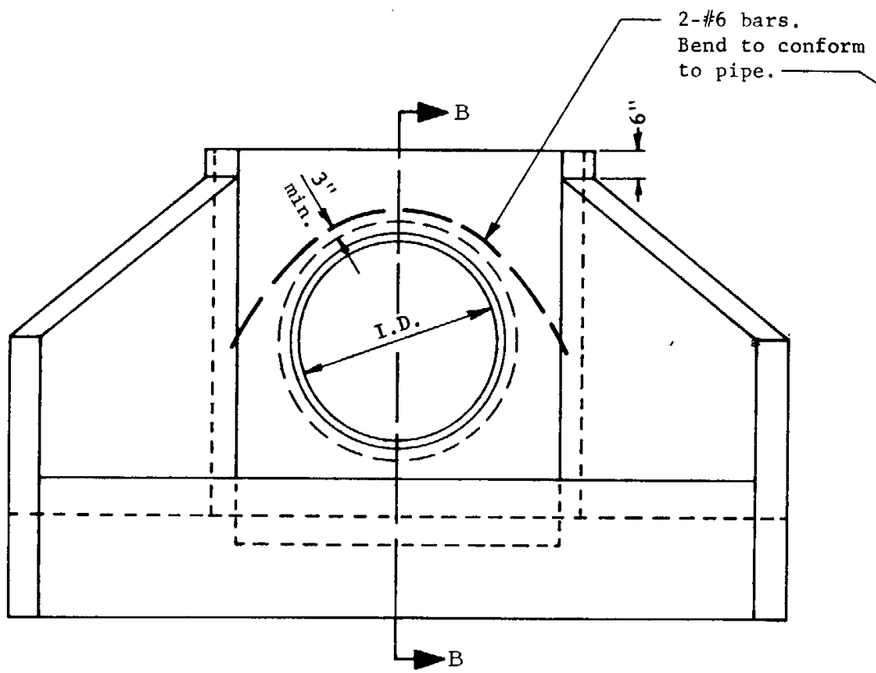

ELEVATION

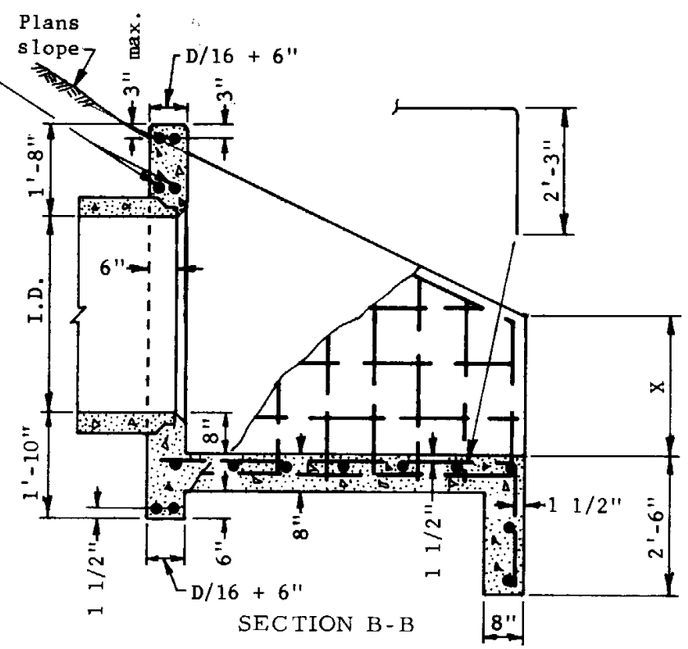

SECTION B-B

* Reinforced Concrete Pipe shown. For C.M.P. see Detail No. 1.

ARIZONA HIGHWAY DEPARTMENT
CONSTRUCTION SECTION

Rev 1-12-71 5/72

PIPE HEADWALLS 42" TO 84" DIAMETER PIPES

Drawn	W.M.D.	Drawing No.
Traced	J.A.W.	
Checked	R.W.	C-14.02
Approved Asst. State Eng Const	E F Sandhu	

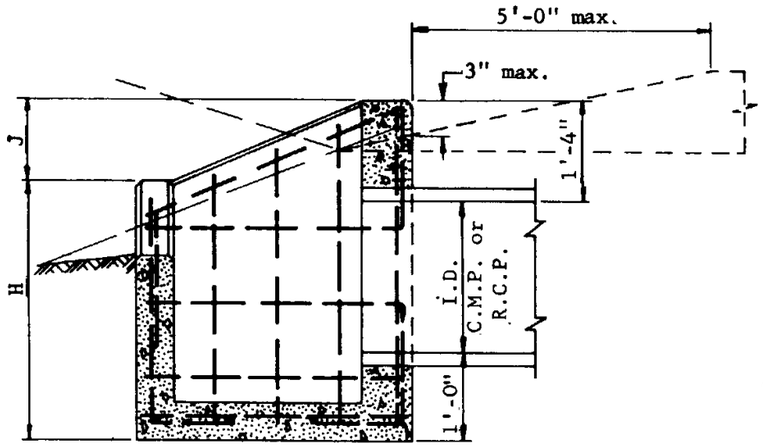

SECTION Z-Z

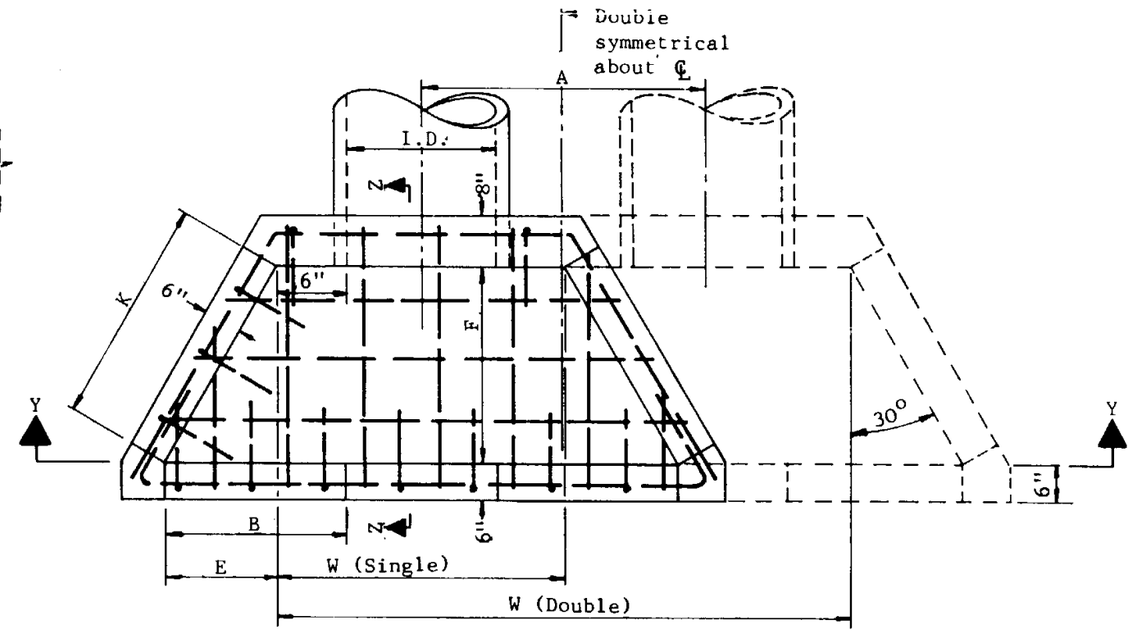

PLAN

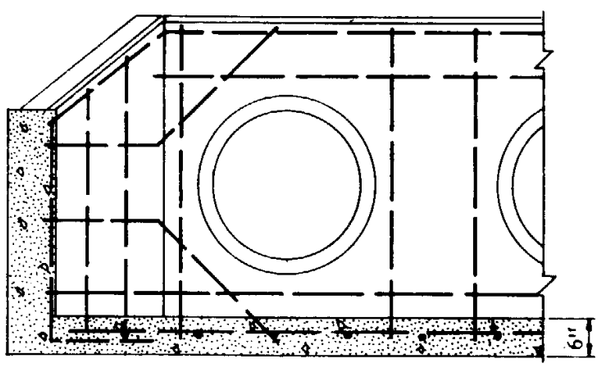

SECTION Y-Y

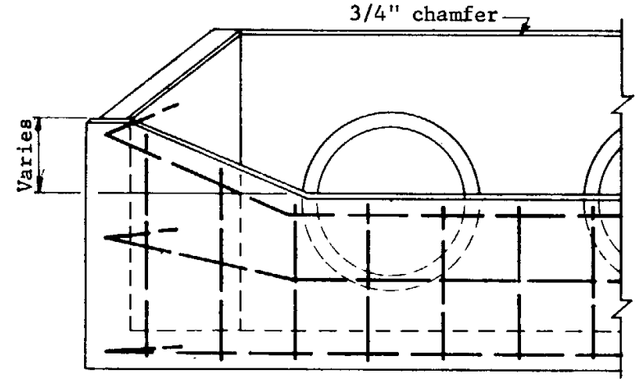

ELEVATION

GENERAL NOTES

Reference Std. C-13.01.

High point of headwall shall not project more than 3" above slope.

All concrete shall be Class A.

All reinforcing shall be # 4 bars 1'-0" c to c

PIPE	DIMENSIONS									QUANTITIES					
										CONC. C.Y.				REINF. STEEL LBS.	
										Single		Double			
I.D.	W Single	W Double	A	B	E	F	H	J	K	C.M.P.	For Conc. Pipe Deduct	C.M.P.	For Conc. Pipe Deduct	Single	Double
18"	2'-6"	5'-2"	2'-8"	1'-3"	9"	1'-3 5/8"	3'-1"	9"	1'-6"	0.76	0.03	1.12	0.06	75	107
24"	3'-0"	6'-6"	3'-6"	1'-7 1/2"	1'-1 1/2"	1'-11 3/8"	3'-5"	11"	2'-3"	1.00	0.04	1.55	0.09	92	136
30"	3'-6"	7'-10"	4'-4"	2'-0"	1'-6"	2'-7 1/4"	3'-9"	1'-1"	3'-0"	1.50	0.06	2.29	0.13	112	166
36"	4'-0"	9'-2"	5'-2"	2'-4 1/2"	1'-10 1/2"	3'-3"	4'-0"	1'-4"	3'-9"	1.96	0.09	3.01	0.17	145	214
42"	4'-6"	10'-6"	6'-0"	2'-9"	2'-3"	3'-10 3/4"	4'-4"	1'-6"	4'-6"	2.49	0.11	3.85	0.23	189	279

ARIZONA HIGHWAY DEPARTMENT
CONSTRUCTION SECTION

Rev 11-14-68 3/71

DROP INLET HEADWALLS

Drawn	K.S. 10-39	Drawing No.
Traced	S.L.T. 8-67	
Checked	J.P.O. JPO 5-68	C-14.03
Approved Asst. State Eng Const	E.T. Sandelin	

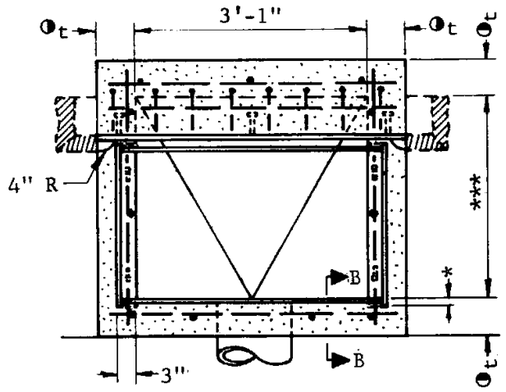

PLAN-CATCH BASIN NO. 1 - SINGLE

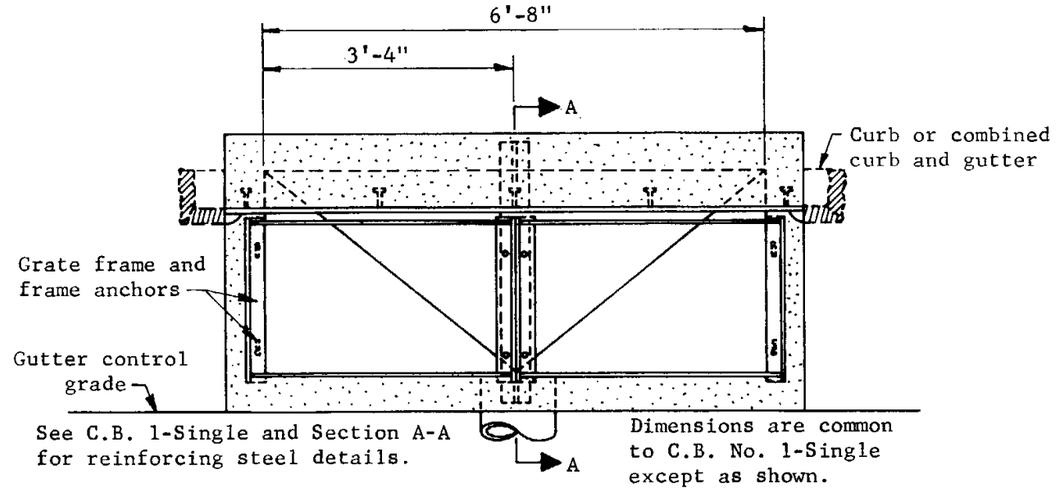

PLAN - CATCH BASIN NO. 1 -DOUBLE

#3 bars, 6" c to c
1 1/2" clear to top
of nose section and
inside of wall. See
Detail No. 3.

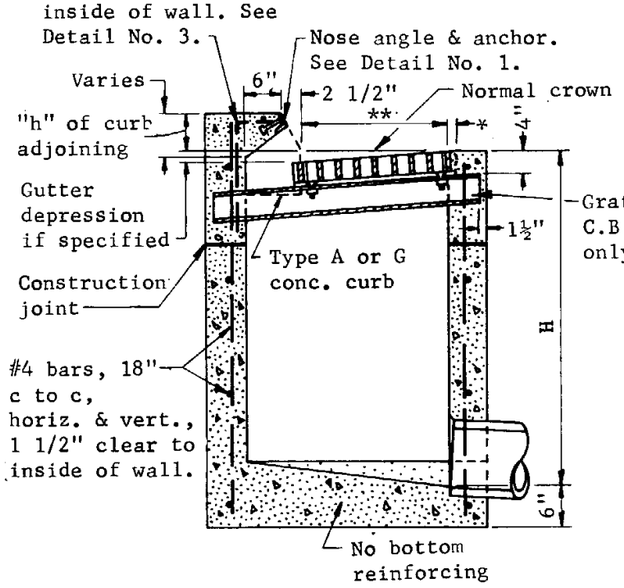

SECTION A-A

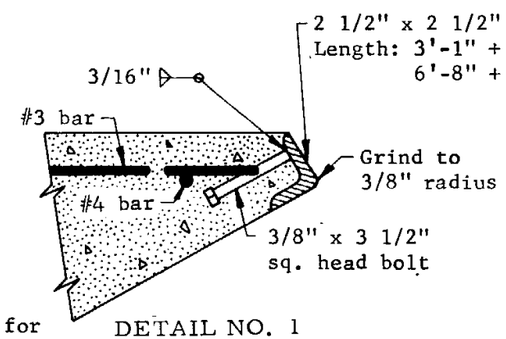

DETAIL NO. 1

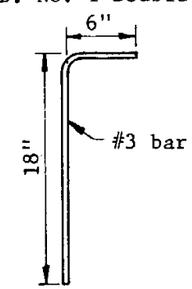

DETAIL NO. 3

NOTE: Provide Std. C-15.08 Construction Drain.

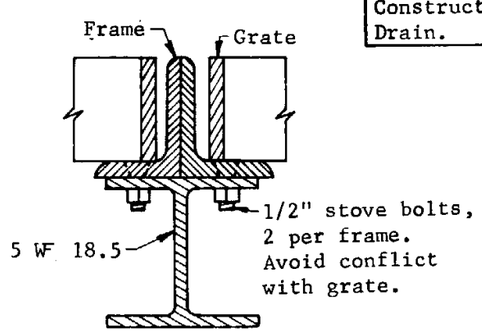

DETAIL NO. 2

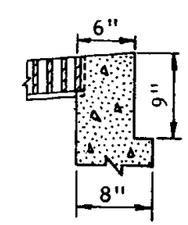

SECTION B-B

Use this section when t = 8"

GENERAL NOTES

Pipes can be placed in any wall.

Sump floor shall have a wood trowel finish and a minimum slope of 4:1 in all directions toward outlet pipe.

Welding shall be in accordance with A.H.D. Welding Specifications.

For grates LW-1, TW-2, etc., and frame details and opening areas, see Stds. C-15.06 and C-15.07.

Any specified gutter depression shall be warped to opening according to Std. C-15.08.

All structural steel shall be ASTM A 36.

Grate support and nose angle shall be given one shop coat of No. 1 paint.

All concrete shall be Class A.

Curb opening areas (Sq.Ft.) for Catch Basin No. 1-Single and Catch Basin No. 1-Double equal 0.26 and 0.55, respectively, for each inch of curb "h" + gutter depression - 2.1"

Construction joints shall be placed to meet field conditions.

* 3/4" for longitudinal and 3" for transverse grates.

** 2'-0" for LW-1, LB-1, TW-1 and TB-1 grates. 1'-6" for LW-2, LB-2, TW-2 and TB-2 grates. Use 1'-6" dimension when catch basin is used with combined curb and gutter.

*** 2'-8 1/2" for LW-1, LB-1, TW-1 and TB-1 grates. 2'-2 1/2" for LW-2, LB-2, TW-2 and TB-2 grates.

◑ t = 6" when H is 8' or less; 8" when H is over 8'. (See Section B-B)

ARIZONA HIGHWAY DEPARTMENT
CONSTRUCTION SECTION

Rev 12-5-68 3-71

TYPE 1 CATCH BASIN

Drawn	D.G. 7-67	Drawing No.
Traced	R.A.F. 7-67	
Checked	J.P.O. JPO 5-68	C-15.01
Approved Asst. State Eng Const	E F Schnelin	

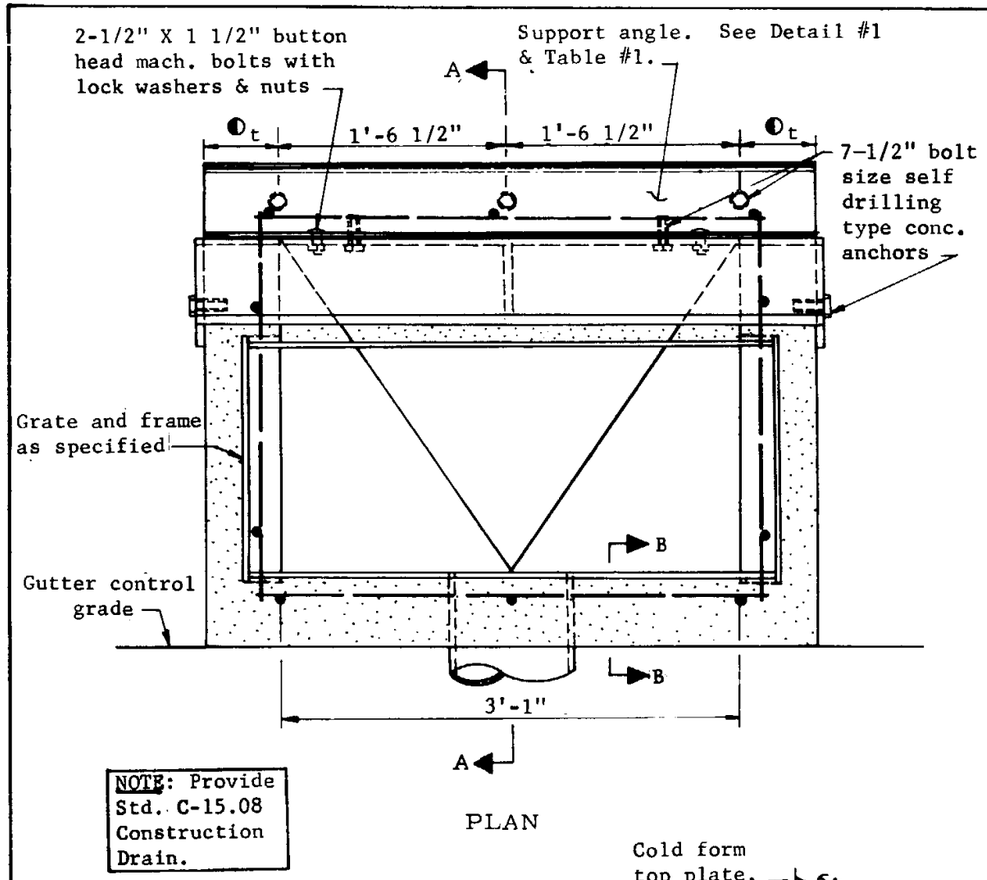

NOTE: Provide Std. C-15.08 Construction Drain.

PLAN

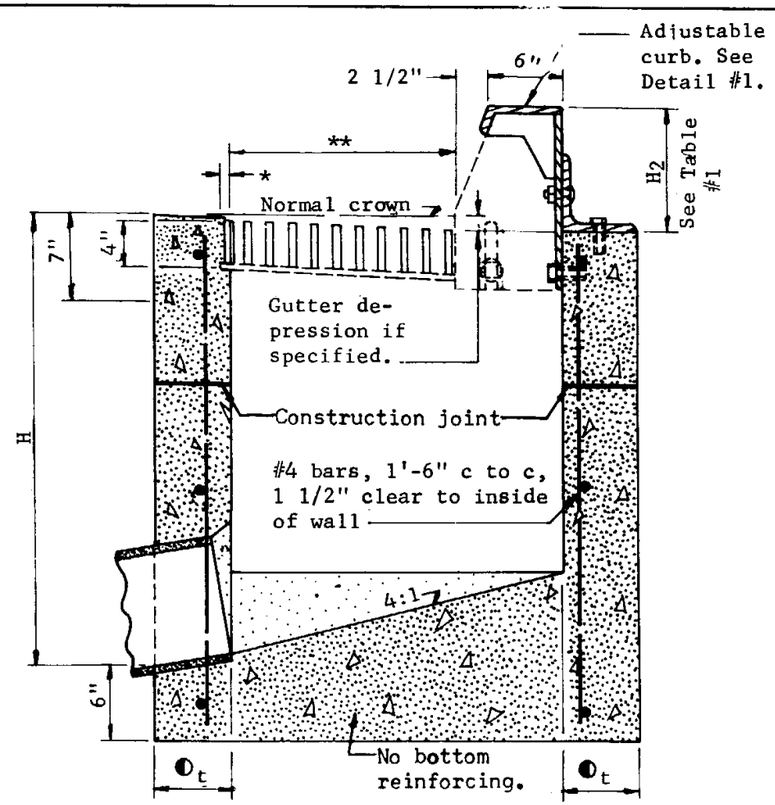

SECTION A-A

TABLE #1

H_2	Support Angle size
4 1/16" to 8 3/16"	4"X4"X3/8"
8 1/4" to 9 3/16"	5"X5"X3/8"
9 1/4" to 10 1/16"	6"X6"X3/8"

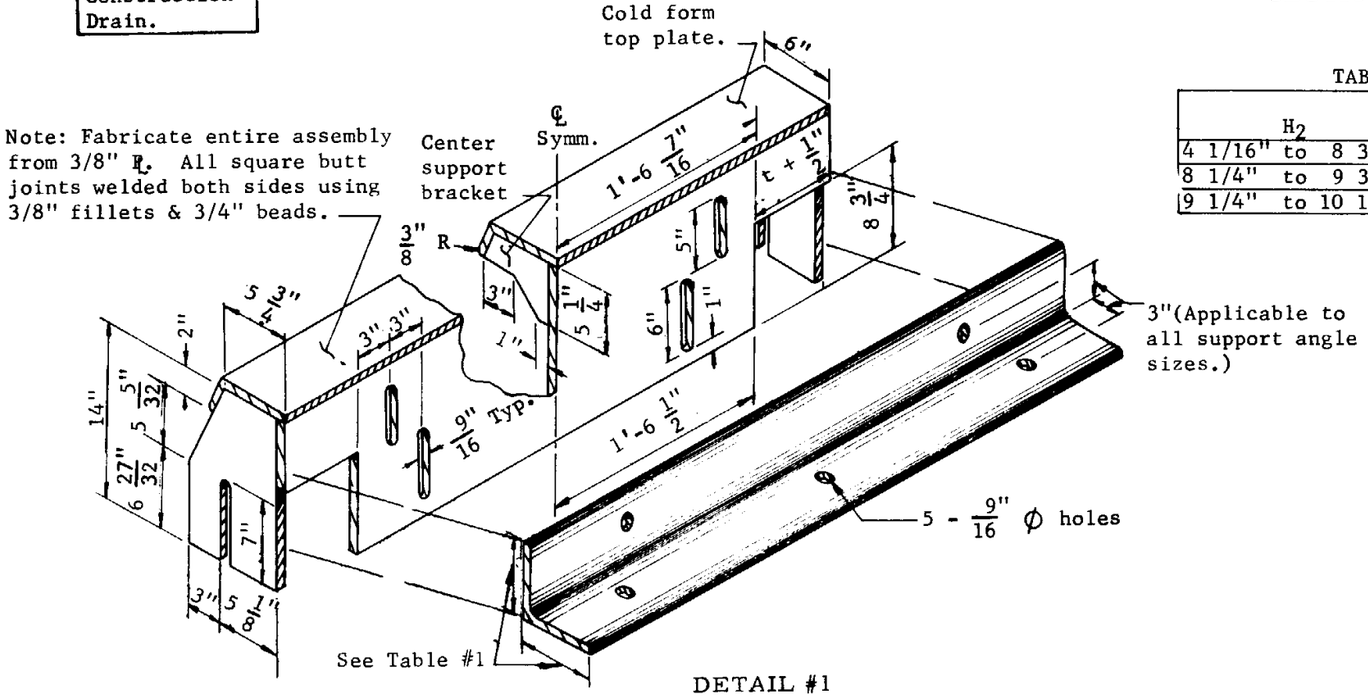

DETAIL #1
ADJUSTABLE CURB ASSEMBLY

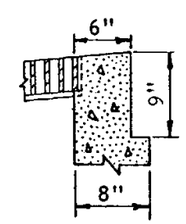

SECTION B-B

GENERAL NOTES

Pipes can be placed in any wall.

1/2" chamfer top edges of sump walls.

Basin sump floors shall have wood trowel finish and a minimum slope of 4:1 from all directions toward outlet pipe.

Welding shall be in accordance with A.H.D. Welding Specifications.

Exposed steel shall be given one coat of No. 1 paint.

For grates LW-1, TW-2, etc. and frame details and opening areas, see Stds. C-15.06 and C-15.07.

Gutter depression = 3" max. modified to 1 1/2" max. for shoulder locations and no depression for adjoining medians.

Any specified gutter and apron depression shall be warped to opening according to Standard C-15.08.

All Concrete shall be Class A.

All Structural steel shall be ASTM A 36.

Adjustable Curb shall be galvanized according to ASTM A 123.

Construction joints shall be placed to meet field conditions.

* 3/4" for LW or LB grates.
3" for TW or TB grates.

** 2'-0" for LW-1, LB-1, TW-1 or TB-1 grates. 1'-6" for LW-2, LB-2, TW-2 or TB-2 grates. Use 1'-6" dimensions when catch basin is used with combined curb and gutter.

t = 6" when H is 8' or less; 8" when H is over 8'. (See Sec. B-B)

ARIZONA HIGHWAY DEPARTMENT
CONSTRUCTION SECTION

Rev 12-5-68 3-71 5/72

TYPE 2 CATCH BASIN

Drawn	D.G.	11-66	Drawing No.
Traced	S.L.T.	6-67	C-15.02
Checked	J.P.O.	JPO 5-68	
Approved Asst. State Eng Const.	E F Chandlin		

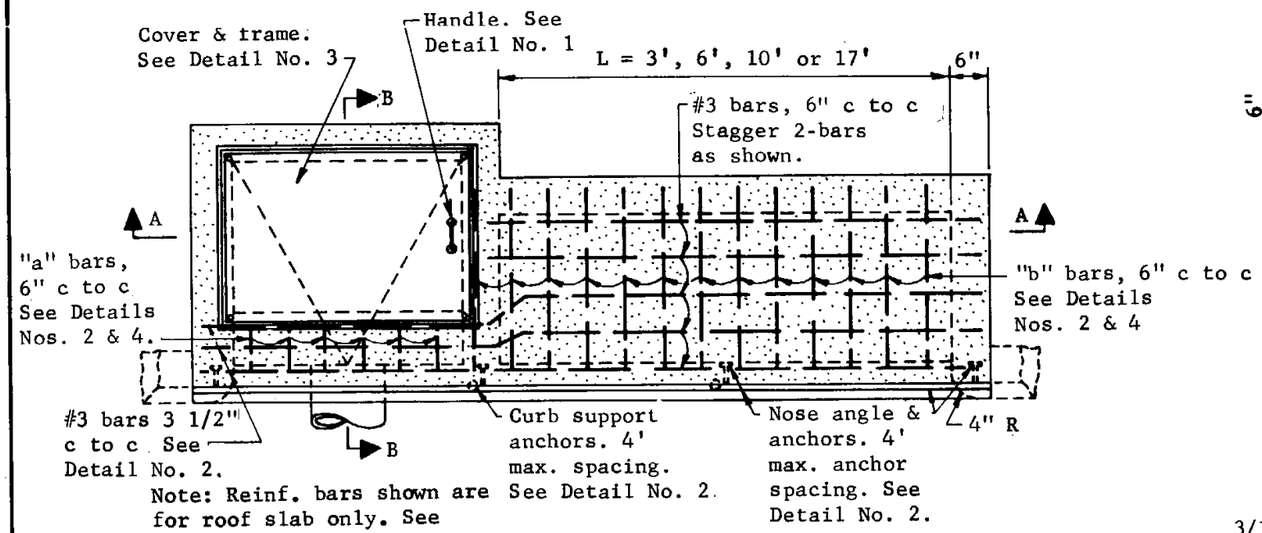

Note: Reinf. bars shown are for roof slab only. See Sections for other reinf.

PLAN

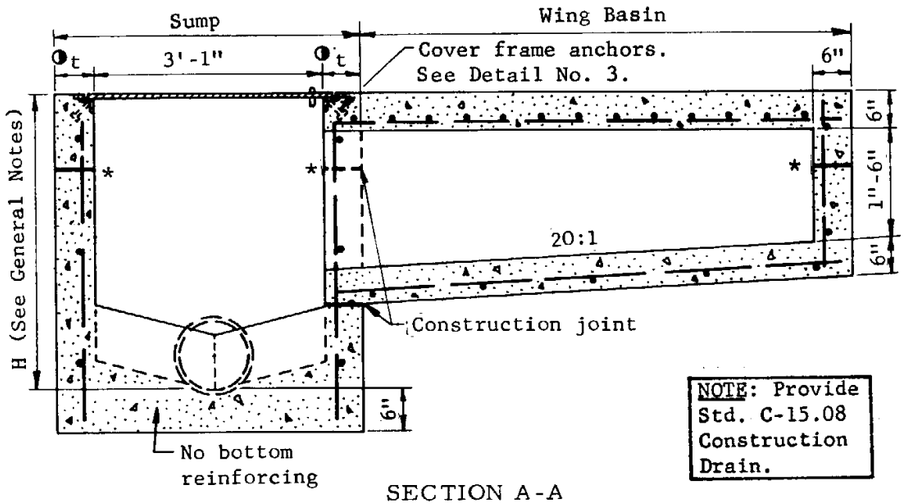

SECTION A-A

NOTE: Provide Std. C-15.08 Construction Drain.

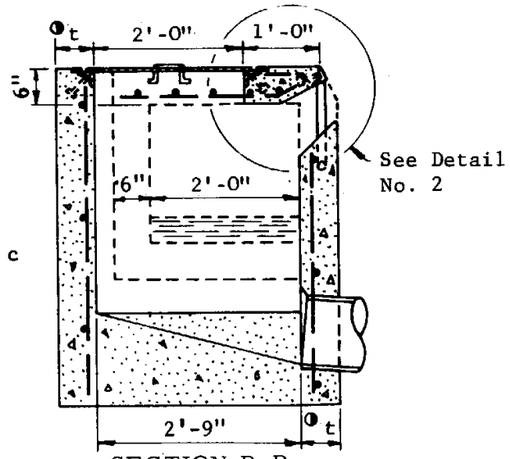

SECTION B-B

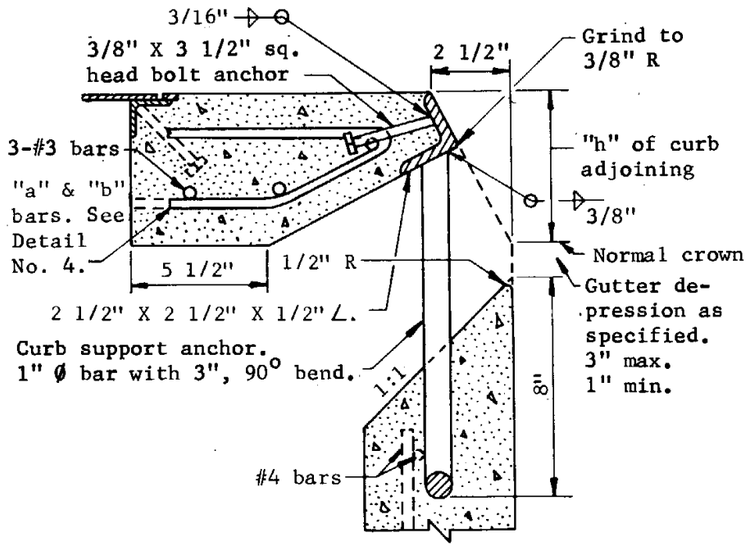

DETAIL NO. 2

GENERAL NOTES

C.B. 3 sump only.

C.B. 3-Wing (illustrated), sump with wing basin upstream.

C.B. 3-Double Wing, sump with symmetrical wing basins each side.

Pipes can be placed in any wall except wall adjacent to a wing basin.

Sump floor shall have a wood trowel finish and a minimum slope of 4:1 in all directions toward outlet pipe.

Gutter depression shall be warped to opening according to Std. C-15.08.

All structural steel shall be ASTM A 36.

Nose angle shall be given one shop coat of No. 1 paint.

All concrete shall be class A.

All reinforcing bars shall be #4, 1'-6" c to c both ways and 1 1/2" clear to inside of walls and outside of wing basin floor except as shown.

Curb opening area (Sq. Ft.) per inch of curb "h" + gutter depression = curb opening length (ft.) x 0.0834.

Welding shall be in accordance with A.H.D. Welding Specifications.

* Construction joints at bottom of curb line. Construction joints shall be placed to meet field conditions.

◑ t = 6" when H = 8' or less
8" when H is greater than 8'.

H = 2'-10" min. when L = 3'
3'- 0" min. when L = 6'
3'- 2" min. when L = 10'
3'- 7" min. when L = 17'

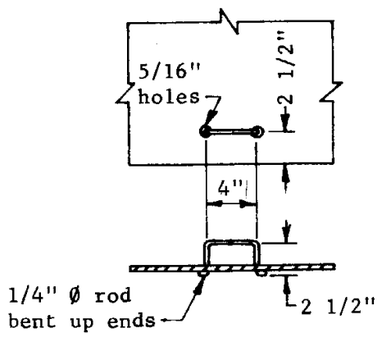

DETAIL NO. 1

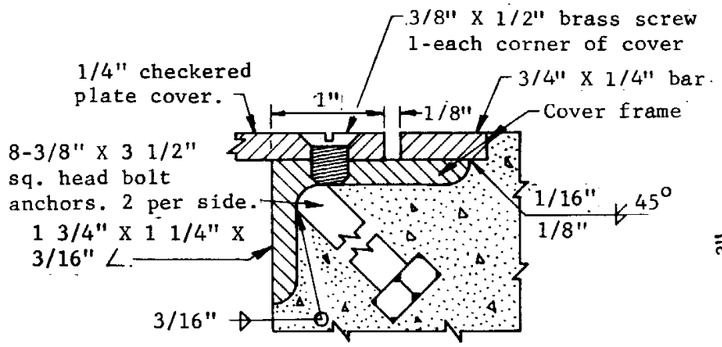

DETAIL NO. 3

Miter frame sections 45° butt weld and surface grind.

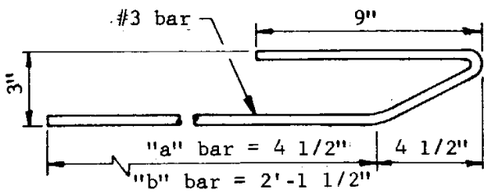

DETAIL NO. 4

ARIZONA HIGHWAY DEPARTMENT
CONSTRUCTION SECTION

TYPE 3 CATCH BASIN

Rev 12-2-68 3-71

Drawn	D.G. 7-67	Drawing No.
Traced	R.A.F. 7-67	C-15.03
Checked	J.P.O. JPO 5-68	
Approved Asst. State Eng Const.	E F Sandlin	

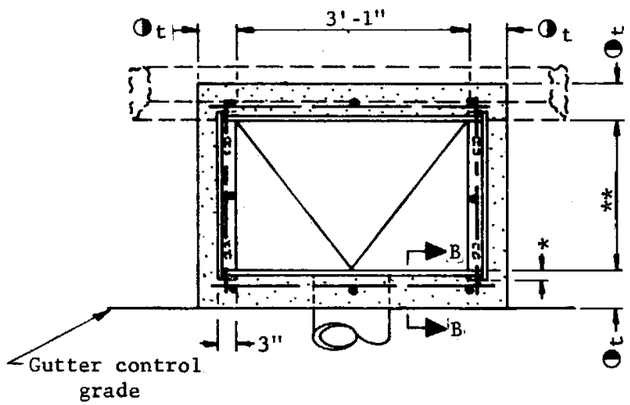

PLAN, CATCH BASIN NO. 4-SINGLE

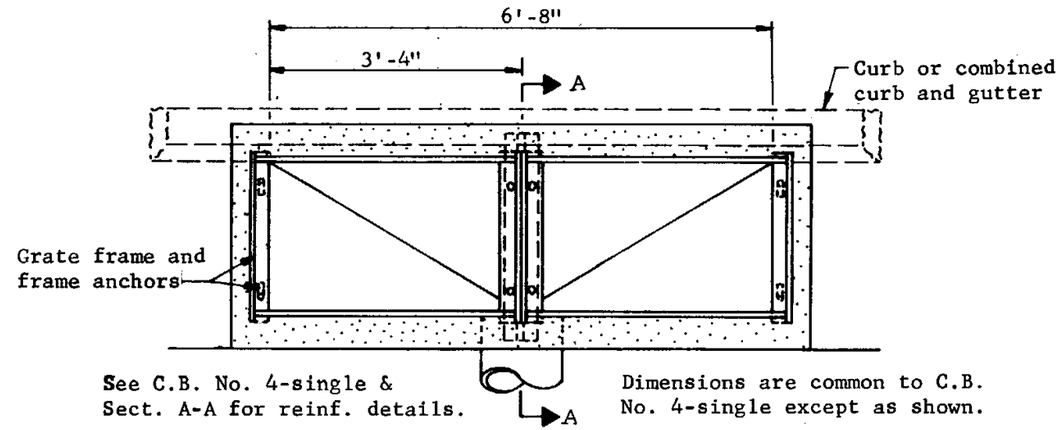

PLAN, CATCH BASIN NO. 4-DOUBLE

GENERAL NOTES

Pipes can be placed in any wall.

Sump floor shall have a wood trowel finish and a minimum slope of 4:1 in all directions toward outlet pipe.

Curb over catch basin shall not be constructed until catch basin concrete has set for a minimum of 24 hours.

For grate and frame details and opening areas, see Stds. C-15.06 and C-15.07.

Any specified gutter depression shall be warped to opening according to Std. C-15.08.

All structural steel shall be ASTM A 36.

Grate support shall be given one shop coat of No. 1 paint.

All concrete shall be Class A.

Construction joints shall be placed to meet field conditions.

* 3/4" for LW or LB grates.
3" for TW or TB grates.

** 2'-0" for LW-1, LB-1, TW-1 and TB-1 grates. 1'-6" for LW-2, LB-2, TW-2 and TB-2 grates. Use 1'-6" dimension when catch basin is used with combined curb and gutter.

◑ t = 6" when H = 8' or less
8" when H is greater than 8'. (See Section B-B)

NOTE: Provide Std. C-15.08 Construction Drain.

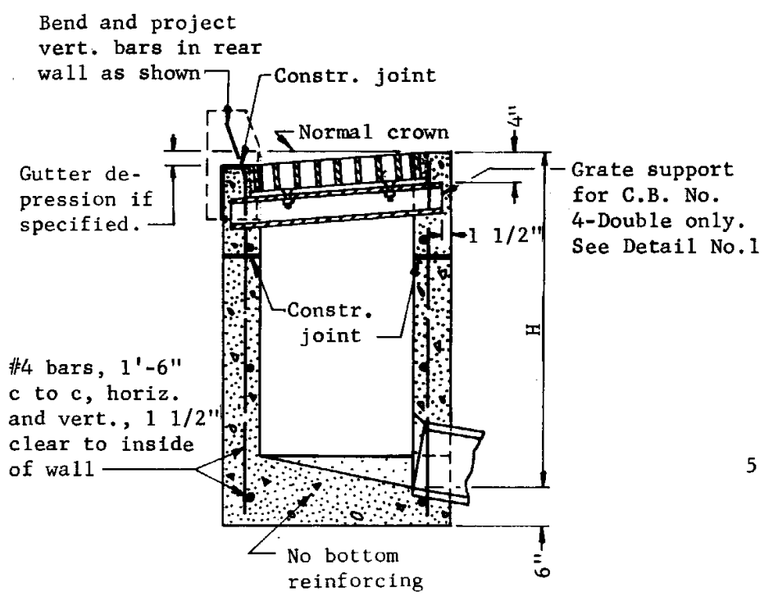

SECTION A-A

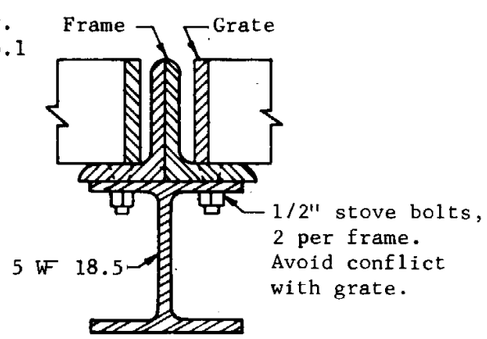

DETAIL NO. 1

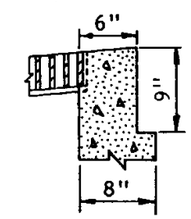

SECTION B-B

Use this section when t = 8"

ARIZONA HIGHWAY DEPARTMENT
CONSTRUCTION SECTION

Rev 3-71

TYPE 4 CATCH BASIN

Drawn	D.G. 6-67	Drawing No.
Traced	S.L.T. 7-67	
Checked	J.P.O. JPO 5-68	C-15.04
Approved Asst. State Eng Const.	EF Spindler	

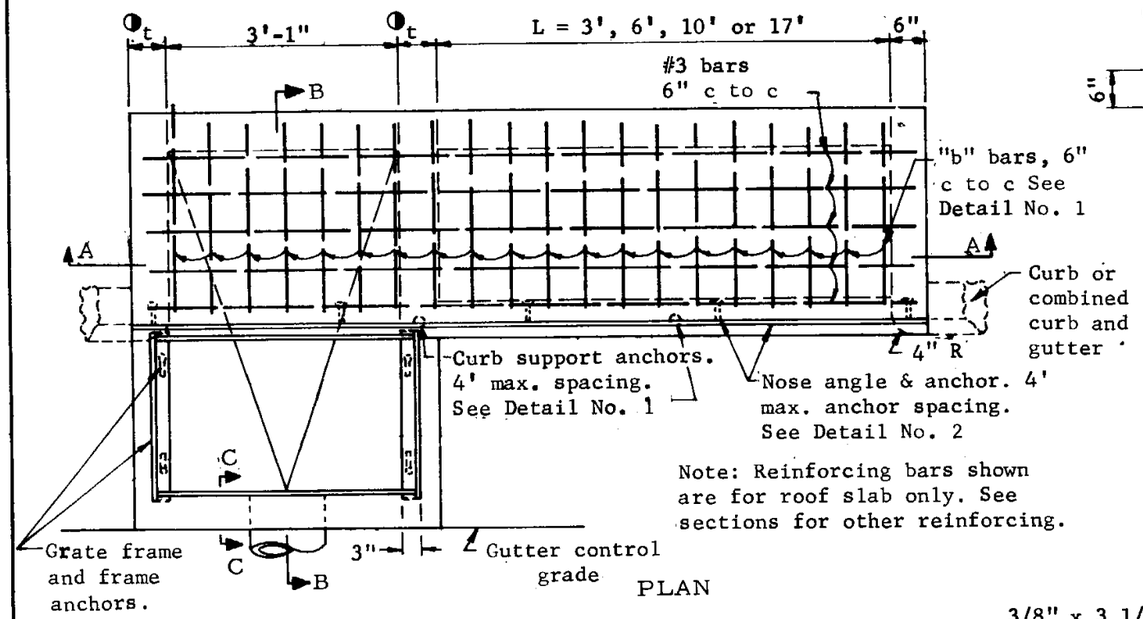

PLAN

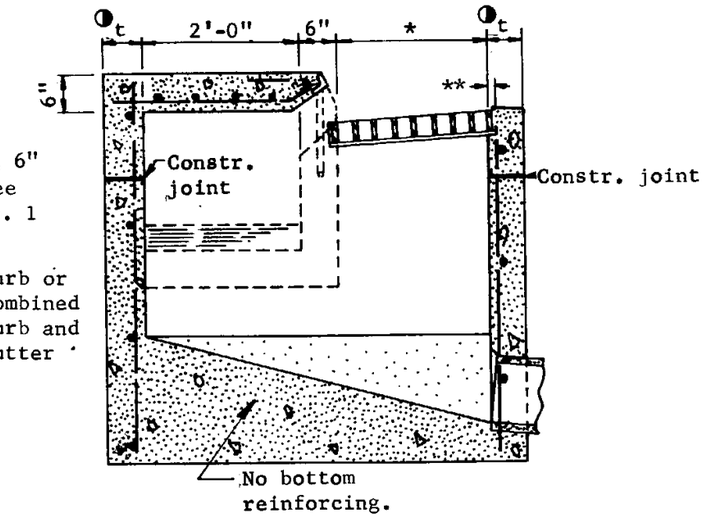

SECTION B-B

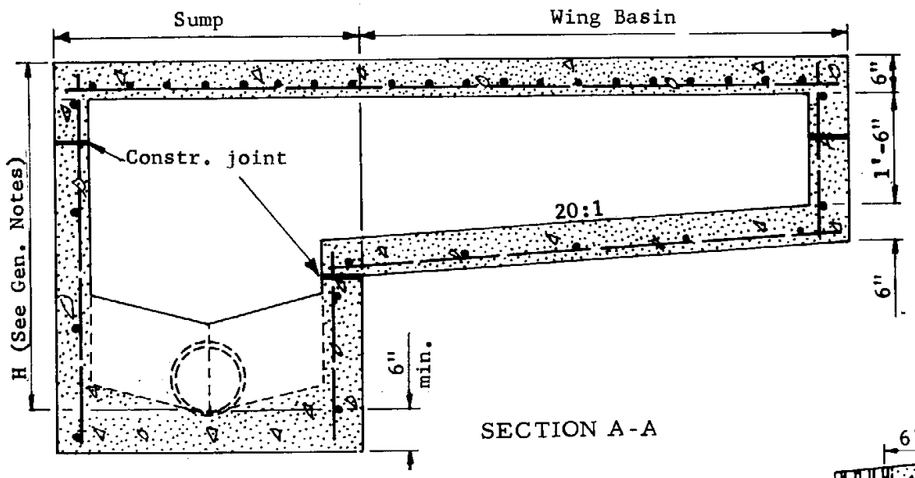

SECTION A-A

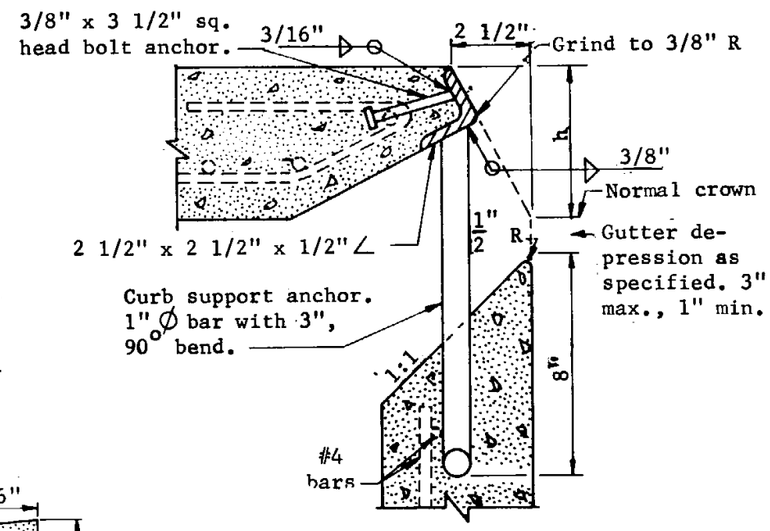

DETAIL NO. 2

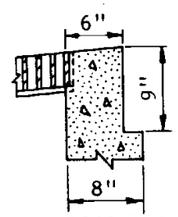

SECTION C-C
Use this section when t = 8"

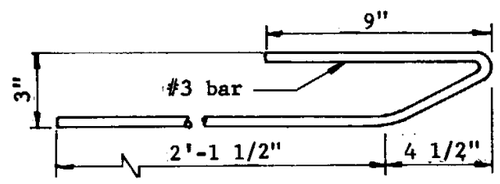

DETAIL NO. 1

NOTE: Provide Std. C-15.08 Construction Drain.

GENERAL NOTES

C.B. 5, sump only.

C.B. 5 Single, (illustrated), sump with wing basin upstream.

C.B. 5 Double, sump with symmetrical wing basins each side.

Pipes can be placed in any wall except wall adjacent to a wing basin.

Sump floor shall have a wood trowel finish and a minimum slope of 4:1 in all directions toward outlet pipe.

Welding shall be in accordance with A.H.D. Welding Specifications.

Gutter depression shall be warped to opening according to Std. C-15.08.

All structural steel shall be in accordance with ASTM A 36.

Nose angle shall be painted with one No. 1 shop coat.

All concrete shall be Class A.

All reinforcing bars shall be #4, 18" c to c both ways and 1 1/2" clear to inside of walls and outside of wing basin floor except as shown.

Curb opening area (Sq. Ft.) per inch of curb "h" + gutter depression = curb opening length (Ft.) X 0.0834.

For grate and frame details and opening areas, see Stds. C-15.06 and C-15.07.

Construction joints snall be placed to meet field conditions.

◑t = 6" when H = 8' or less; 8" when H is greater than 8'. (See Section C-C)

*2'-0" for LW-1 and LB-1 grates; 1'-6" for LW-2 and LB-2 grates. Use 1'-6" dimension when catch basin is used with combined curb and gutter.

** 3/4" for longitudinal and 3" for transverse grates.

H = 3'-3" min. when L = 3'
3'-5" min. when L = 6'
3'-7" min. when L = 10'
4'-0" min. when L = 17'

ARIZONA HIGHWAY DEPARTMENT
CONSTRUCTION SECTION

Rev 12-5-68 9-29-70 3-71

TYPE 5 CATCH BASIN

Drawn	D.G. 7-67	Drawing No.
Traced	S.L.T. 7-67	
Checked	J.P.O. JPO 5-68	C-15.05
Approved Asst. State Eng Const	E F Sandlin	

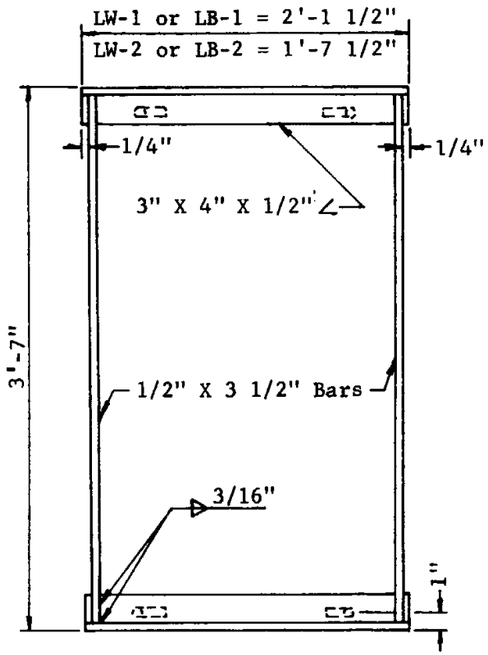

PLAN

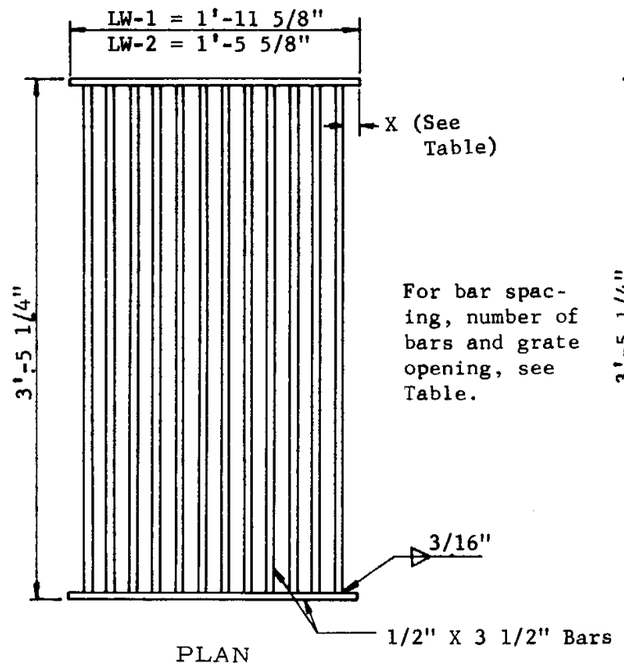

For bar spacing, number of bars and grate opening, see Table.

PLAN

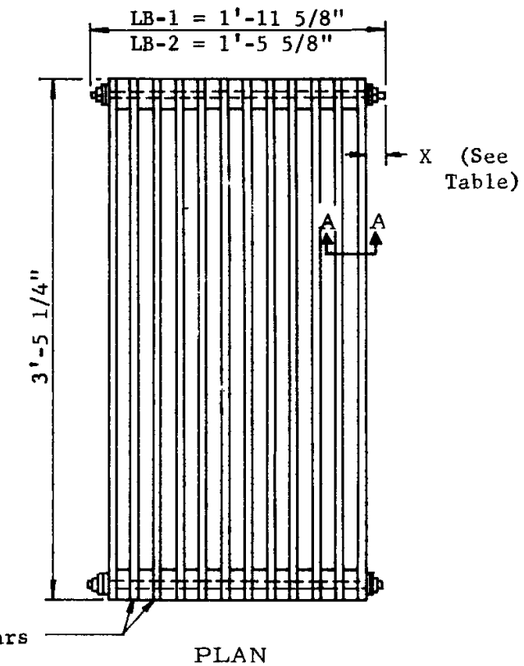

PLAN

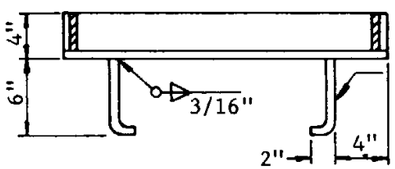

-3/8" Anchors. Delete on one end when used with I-beam support.

SECTION

FRAME

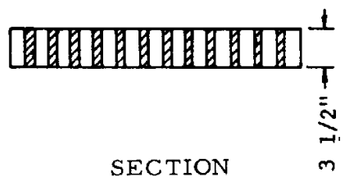

SECTION

GRATE TYPES LW-1 & LW-2

Restricted to use on longitudinal grades of 3% and less.

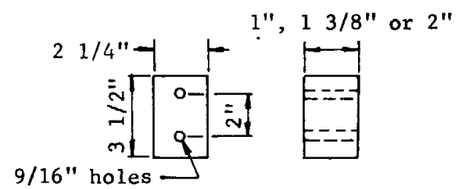

BAR SPACER DETAIL
Cast iron, cast steel or steel bar stock.

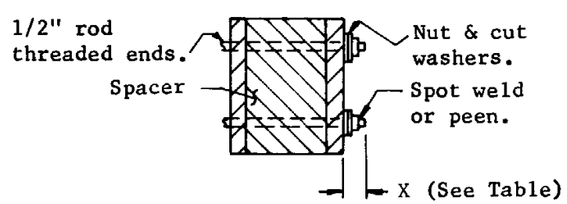

SECTION A-A

GRATE TYPES LB-1 & LB-2

For use on longitudinal grades in excess of 3% or as an alternate to Type LW on grades of 3% or less.

GENERAL NOTES

Grating units and frames shall be fabricated from structural steel except as noted. Structural steel shall be in accordance with ASTM A 36.

Welding shall be in accordance with A.H.D. Welding Specifications.

The completed assembly shall be given one shop coat of No. 1 paint.

LW indicates longitudinal welded.
LB indicates longitudinal bolted.

Type	Clear Spacing	No. Bars	X	Grate Opening Sq. Ft.
LW or LB-1.0	1"	16	5/16"	4.58
LW or LB-1.1	1 3/8"	12	1 1/4"	4.99
LW or LB-1.2	2"	9	1 9/16"	5.41
LW or LB-2.0	1"	12	5/16"	3.47
LW or LB-2.1	1 3/8"	9	1 1/16"	3.75
LW or LB-2.2	2"	7	1 1/16"	4.03

342.7486
262.9186
203.07613
256.9686
197.09613
157.18115

ARIZONA HIGHWAY DEPARTMENT
PLANS DIVISION

Rev 12-5-68

CATCH BASIN GRATE LB AND LW GRATES

Drawn	D.G. 7-66	Drawing No.
Traced	S.L.T. 7-67	C-15.06
Checked	J.P.O. JPO 5-68	
Approved Engr. Plans	G Weidecker 5-68	

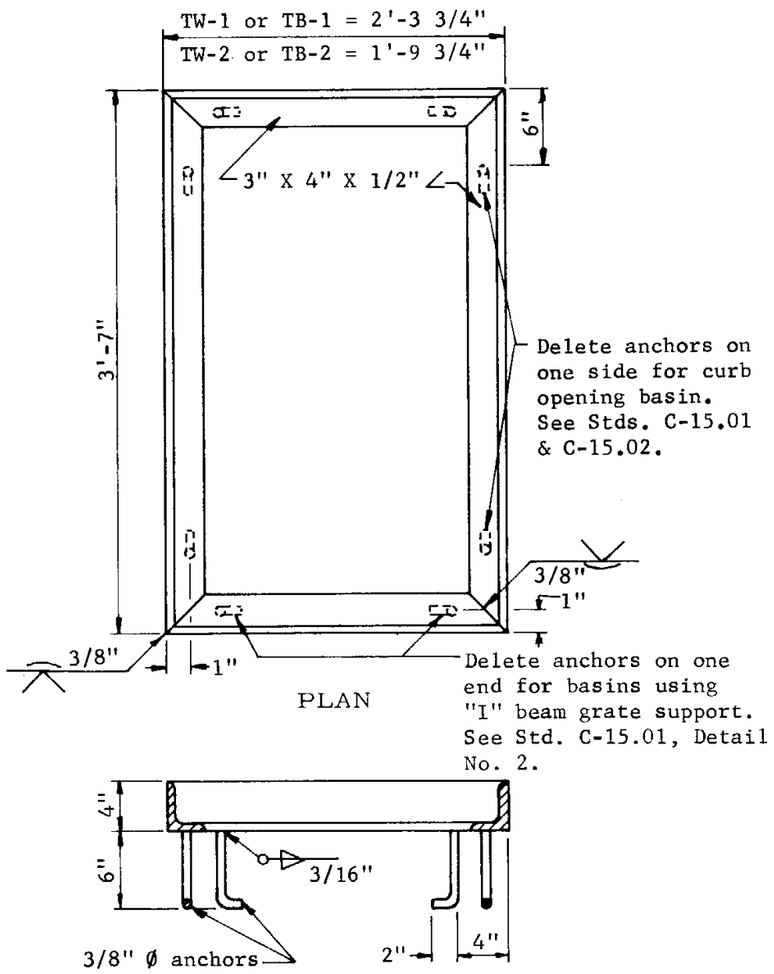

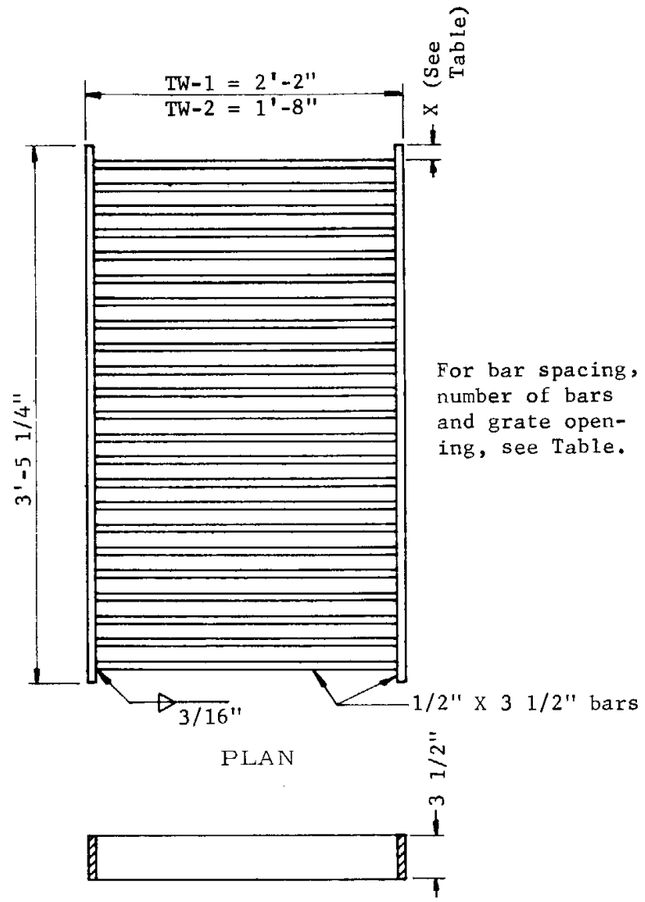

GRATE TYPES TW-1 & TW-2

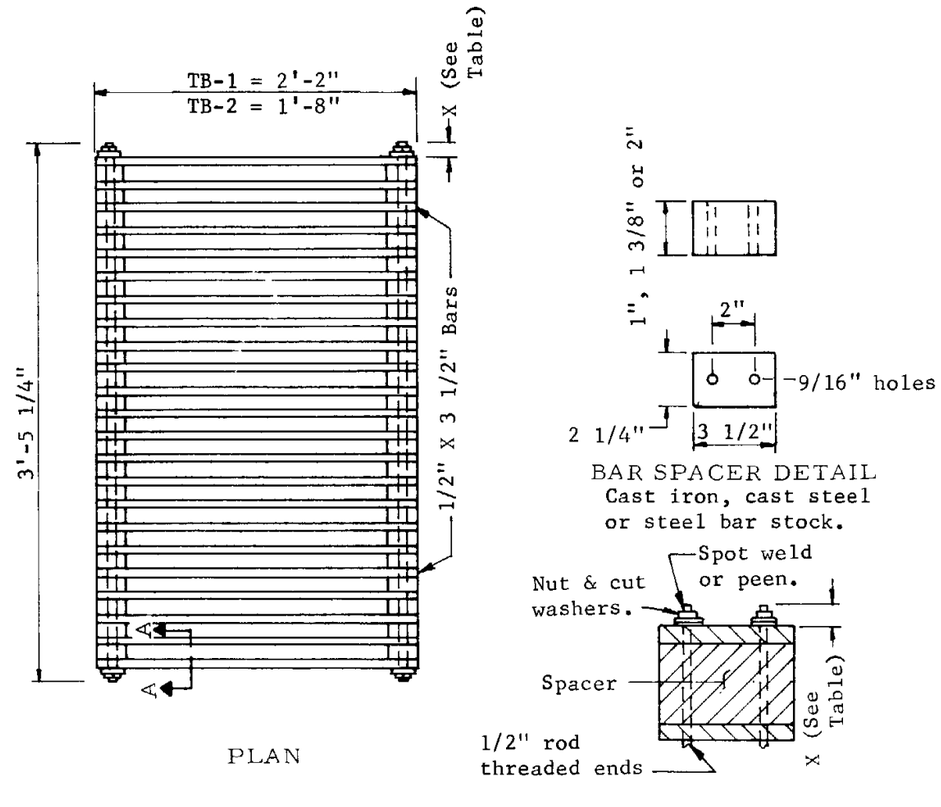

GRATE TYPES TB-1 & TB-2

Type	Clear Spacing	No. Bars	X	Grate Opening Sq. Ft.
TW or TB-1.0	1"	28	7/8"	3.47
TW or TB-1.1	1 3/8"	22	11/16"	3.93
TW or TB-1.2	2"	16	1 5/8"	4.31
TW or TB-2.0	1"	28	7/8"	2.51
TW or TB-2.1	1 3/8"	22	11/16"	2.83
TW or TB-2.2	2"	16	1 5/8"	3.11

GENERAL NOTES

Grating units and frames shall be fabricated from structural steel except as noted. Structural steel shall be in accordance with ASTM A 36.

Welding shall be in accordance with A.H.D. Welding Specifications.

The completed assembly shall be given one shop coat of No. 1 paint.

TW indicates transverse welded.
TB indicates transverse bolted.

ARIZONA HIGHWAY DEPARTMENT
PLANS DIVISION

Rev 12-5-68

CATCH BASIN GRATE TB AND TW GRATES

Drawn	D.G. 6-67	Drawing No.
Traced	S.L.T. 7-67	
Checked	J.P.O. JPO 5-68	C-15.07
Approved Engr. Plans	G Weidner 5-68	

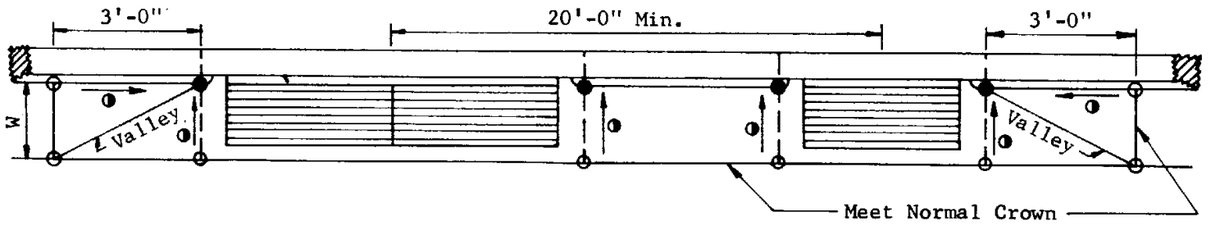

CATCH BASIN TYPES 1, 2, 4-SINGLE, 4-DOUBLE & 5-SINGLE
(Grate opening only or combination; showing minimum spacing for Catch Basins in series.)

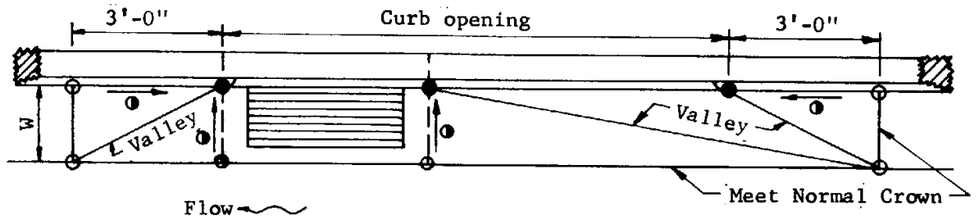

CATCH BASIN TYPES 5-SINGLE & 5-DOUBLE

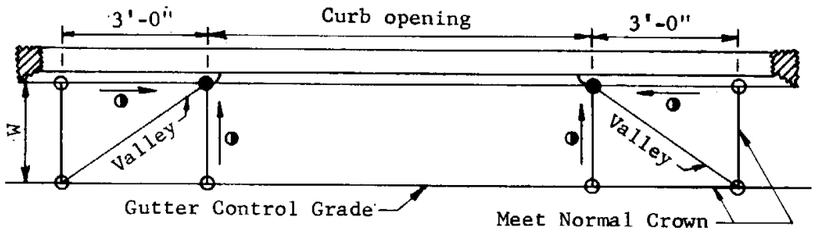

CATCH BASIN TYPE 3
(Curb opening only.)

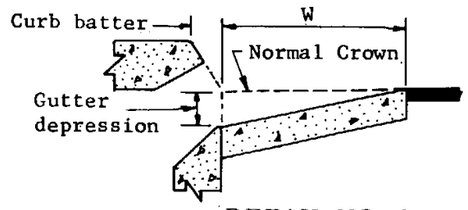

DETAIL NO. 1

LEGEND
Gutter depression: 3" max. (See Detail No. 1)
O = Normal crown or gutter flow line elevation.
● = Depressed elevation.
= Straight grade with downward slope.
W = Normal gutter width per Std. C-5.01

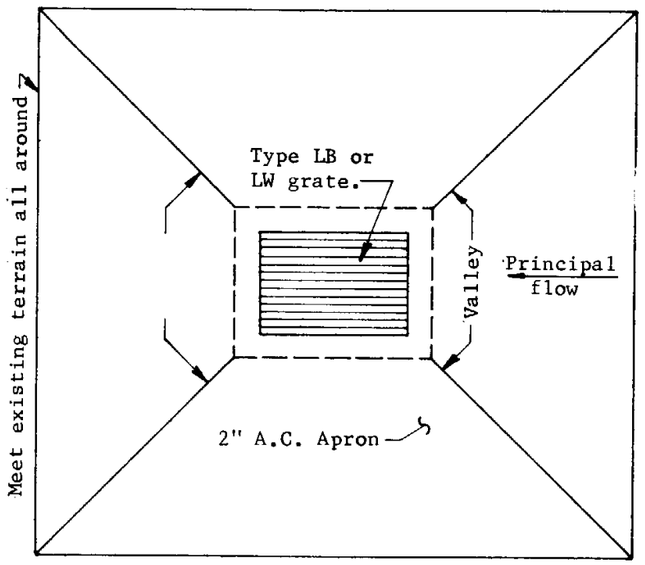

Apron shall be shaped to suit local conditions and shall extend a minimum of 4'-0" from edge of grate in all directions. Grate shall be depressed a minimum of 4" below surrounding terrain and bars shall parallel direction of principal flow.

CATCH BASIN TYPE 4
(Off roadway location)

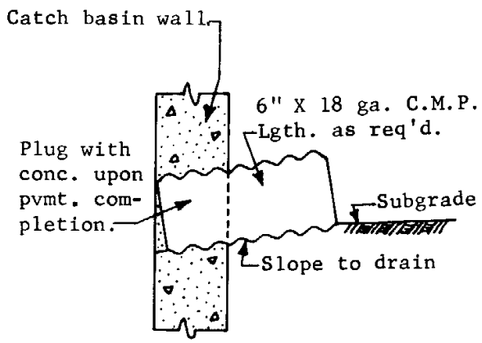

CATCH BASIN
CONSTRUCTION DRAIN
Drain may be deleted at option of Engineer

GENERAL NOTES
No gutter depression shall be used adjacent to median.

ARIZONA HIGHWAY DEPARTMENT
CONSTRUCTION SECTION

Rev 5/72

CATCH BASIN MISC. DETAILS

Drawn	S.L.T.	Drawing No.
Traced		C-15.08
Checked	J.P.O.	
Approved Asst. State Eng Const.		

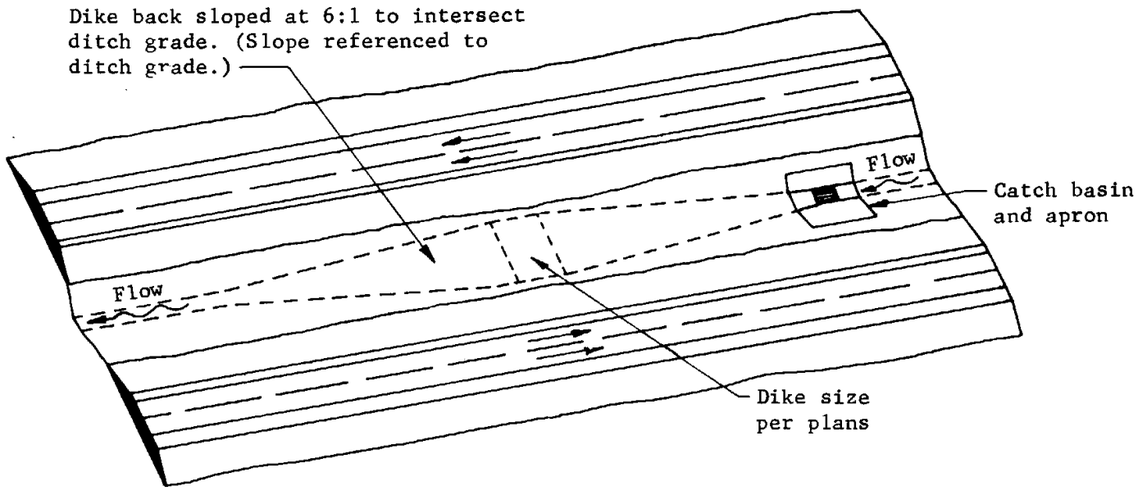

PLAN PERSPECTIVE
ILLUSTRATING 1-WAY FLOW WITH DYKE

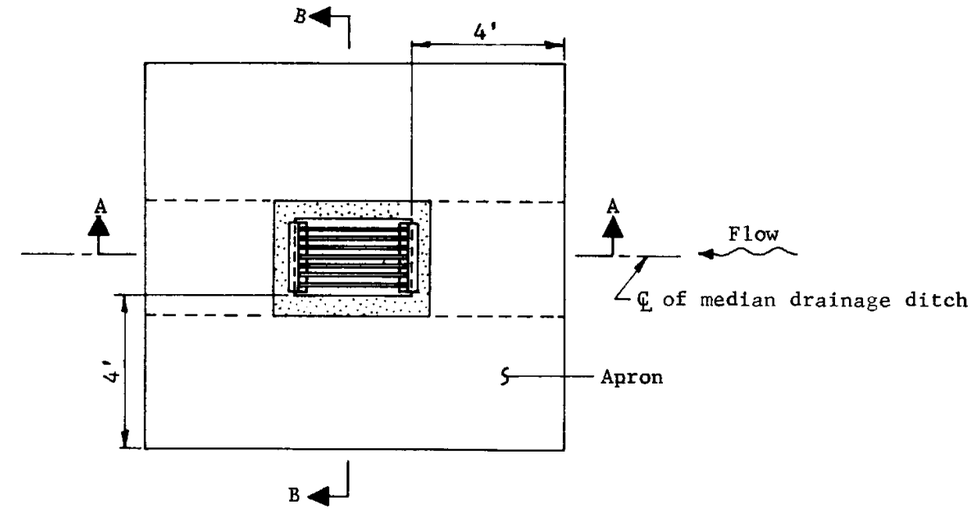

PLAN

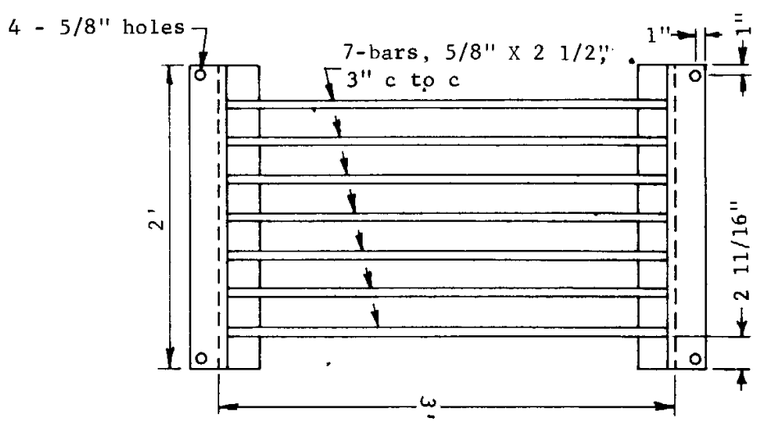

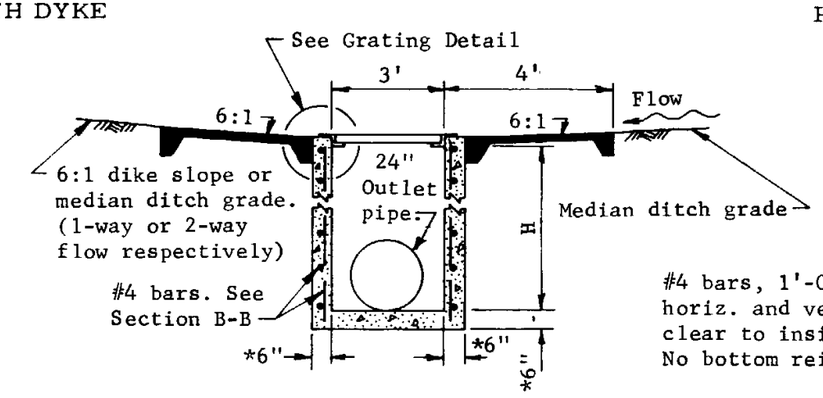

SECTION A-A

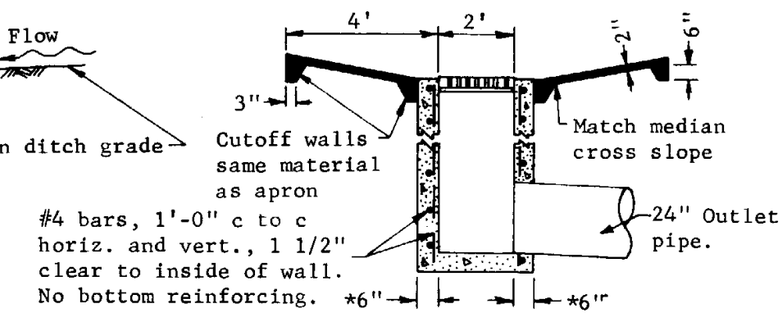

SECTION B-B

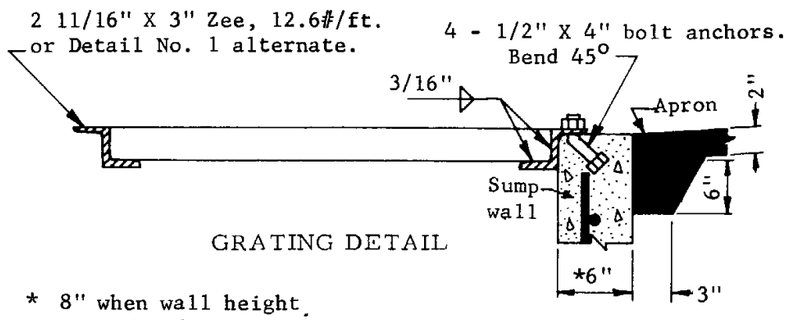

GRATING DETAIL

* 8" when wall height exceeds 8'.

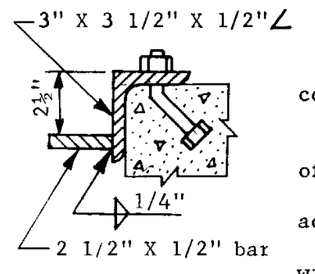

DETAIL NO. 1

GENERAL NOTES

Apron shall be A.C. or P.C. concrete as specified on Plans.

Concrete shall be Class A.

Grating shall be fabricated of structural steel.

Structural steel shall be in accordance with ASTM A 36.

Welding shall be in accordance with A.H.D. Welding Specifications.

Grating assembly shall be given one shop coat of No. 1 paint.

"H" indicated on project Plans.

ARIZONA HIGHWAY DEPARTMENT
PLANS DIVISION

Rev 11-21-68 10-6-70

MEDIAN CATCH BASIN

Drawn	D.G. 3-68	Drawing No.
Traced	R.A.F. 3-68	C-15.09
Checked	J.P.O. 5-68	
Approved		

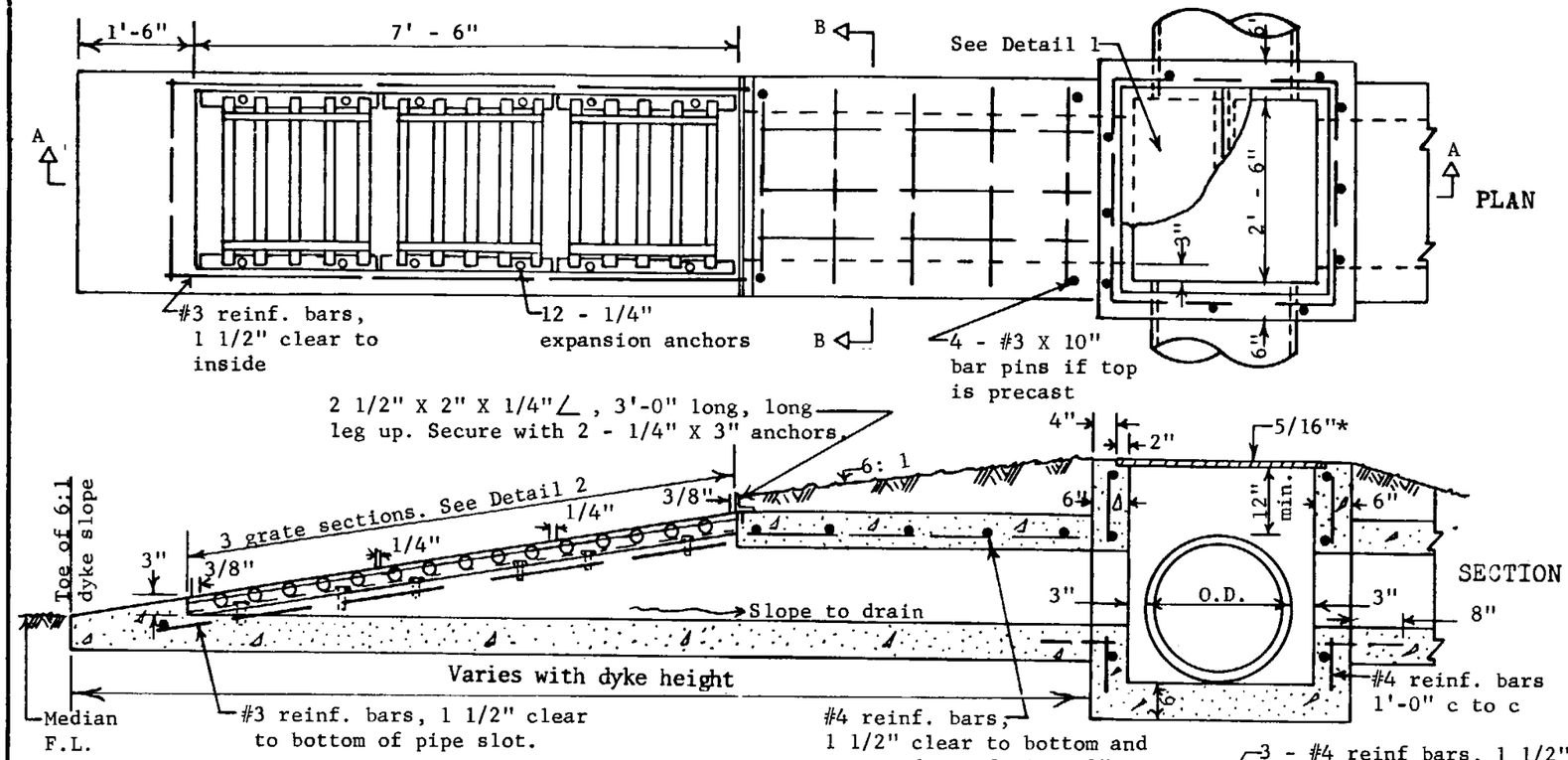

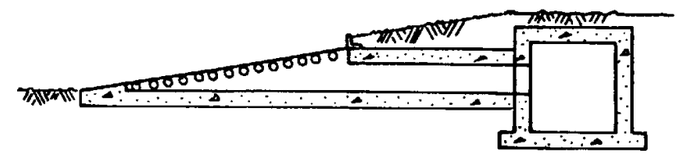

INLET TO BOX CULVERT

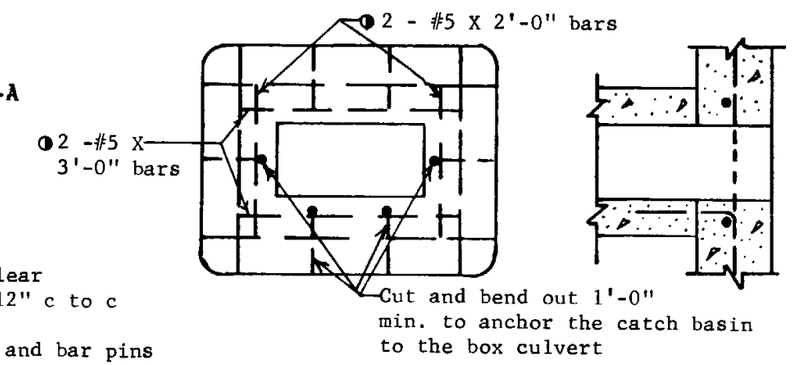

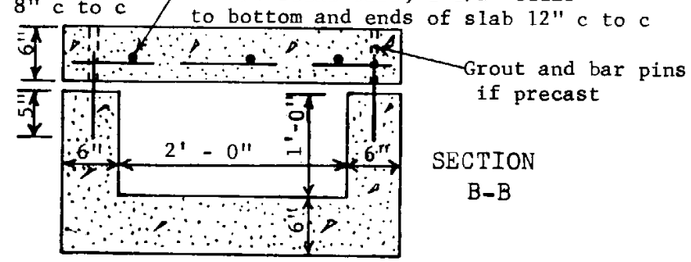

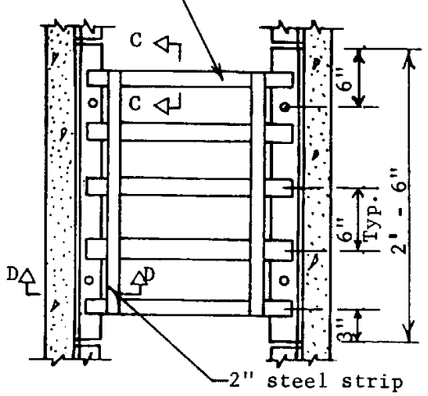

DETAIL 2

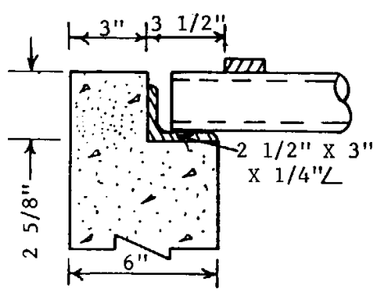

SECTION D-D

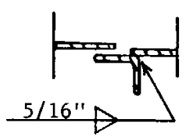

SECTION E-E

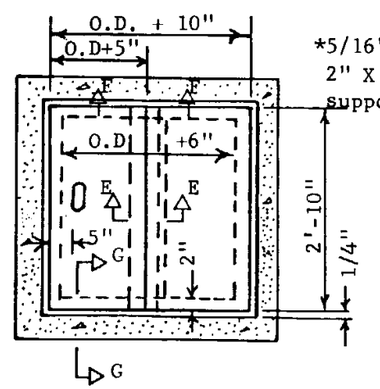

*5/16" checkered PL cover 2" X 2" X 1/4" X 2'-10" support ∠

DETAIL 1

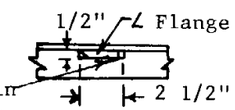

2 1/2" X 1/2" X 2 1/4" slot in wall to receive ∠ flange

SECTION F-F

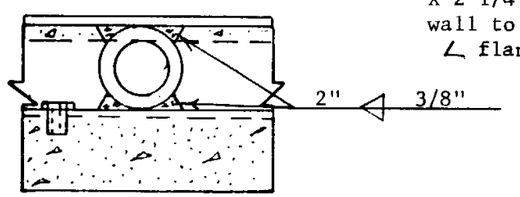

SECTION C-C

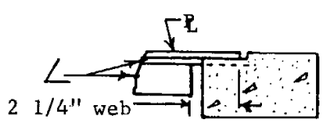

SECTION G-G

CULVERT INLET OPENING DETAILS
STD. RT. ANGLE CULVERTS ONLY
GENERAL NOTES

All concrete shall be Class A.

Steel pipe, plate, strip and angle iron shall be in accordance with ASTM A 36.

Exposed steel shall be given one coat of No. 1 paint.

Welding shall be in accordance with A.H.D. Welding Manual.

* When O.D. + 5" exceeds 1' - 11", use 3/8" plate.

◑ Additional reinf. required.

ARIZONA HIGHWAY DEPARTMENT CONSTRUCTION SECTION			Rev
MEDIAN DYKE CATCH BASIN			12-5-68 4-28-70 10-6-70 5/72
Drawn	D.G. 3 - 68	Drawing No.	
Traced	R.A.F. 4 - 68	C-15.10	
Checked	J.P.O.		
Approved	F. Bandelin		

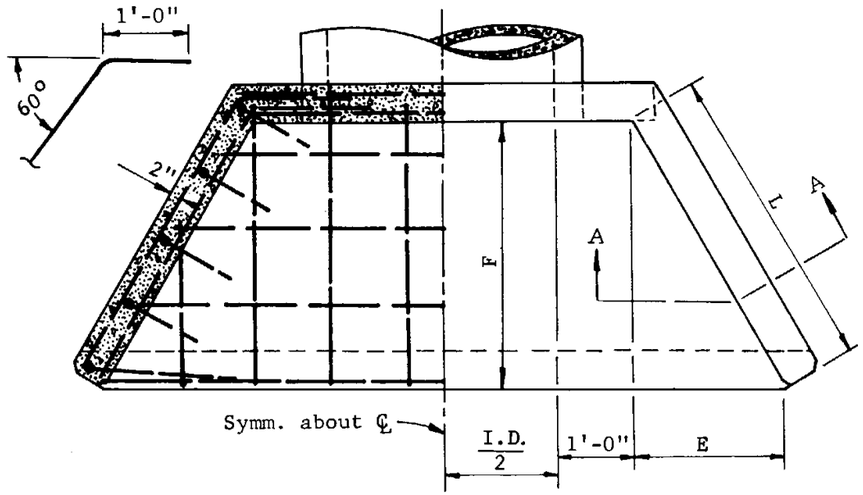

PLAN

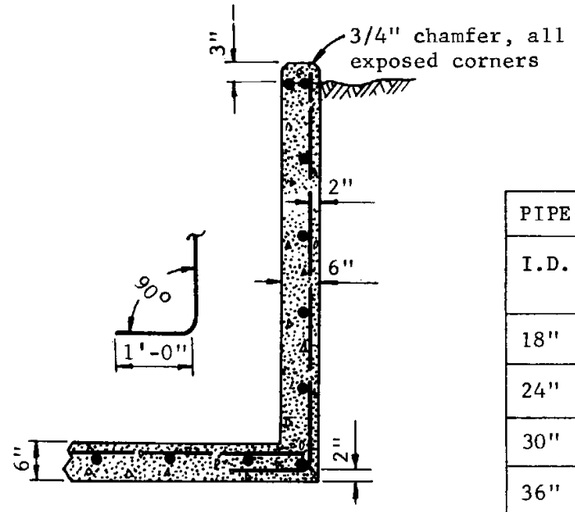

SECTION A-A

PIPE	DIMENSIONS			QUANTITIES		
I.D.	L	E	F (Approx)	C.Y. Conc. C.M.P.	C.Y. Conc. R.C.P.	Reinf.Steel Lbs.
18"	2'-0"	1'-0"	1'-9"	0.97	0.96	65
24"	2'-0"	1'-0"	1'-9"	1.11	1.07	78
30"	3'-0"	1'-6"	2'-7"	1.50	1.44	108
36"	4'-0"	2'-0"	3'-6"	2.08	2.01	150
42"	5'-0"	2'-6"	4'-4"	2.71	2.63	205
48"	6'-0"	3'-0"	5'-2"	3.39	3.30	270
54"	7'-0"	3'-6"	6'-1"	4.14	4.02	335
60"	8'-0"	4'-0"	6'-11"	4.96	4.80	410

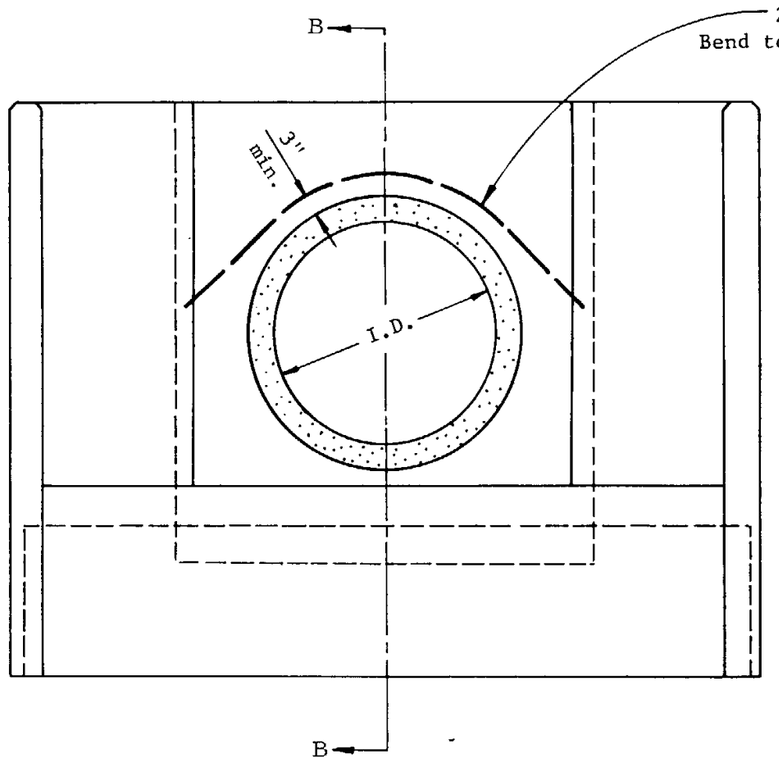

ELEVATION

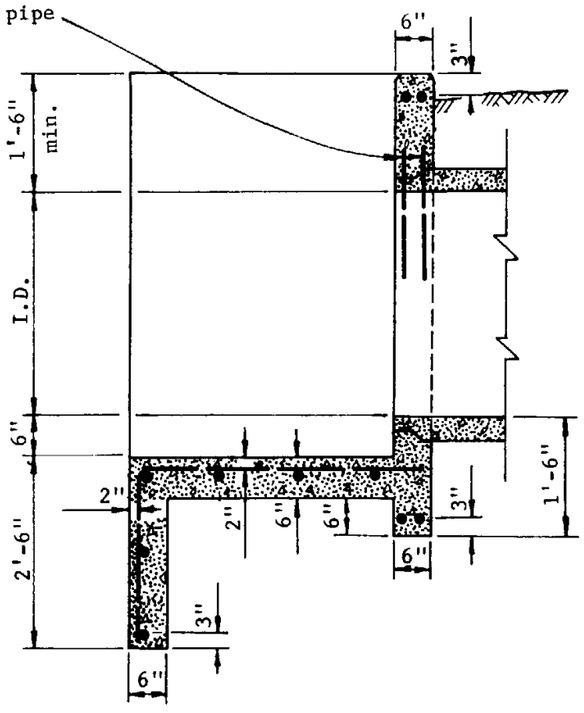

SECTION B-B

GENERAL NOTES

All concrete shall be Class A.

All reinforcing bars shall be #4 except two #6 bars over pipe. Bar spacing approximately 1'-0" c to c unless otherwise noted.

ARIZONA HIGHWAY DEPARTMENT
PLANS DIVISION

Rev

IRRIGATION HEADWALLS 18" TO 60" DIAMETER PIPES

Drawn	R.J.J.	3-10-58
Traced	S.L.T.	5-4-67
Checked	J.P.O.	JPO 5-68
Approved Engr. Plans	G Weidecher 5-68	

Drawing No.

C-16.01

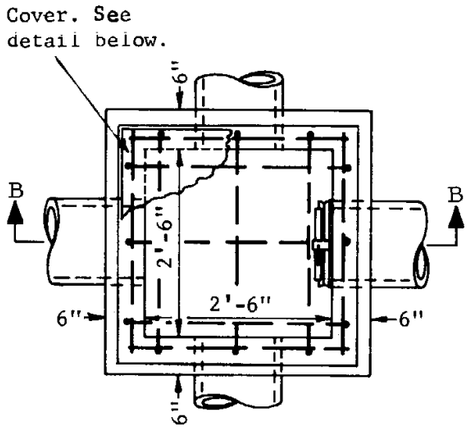

PLAN

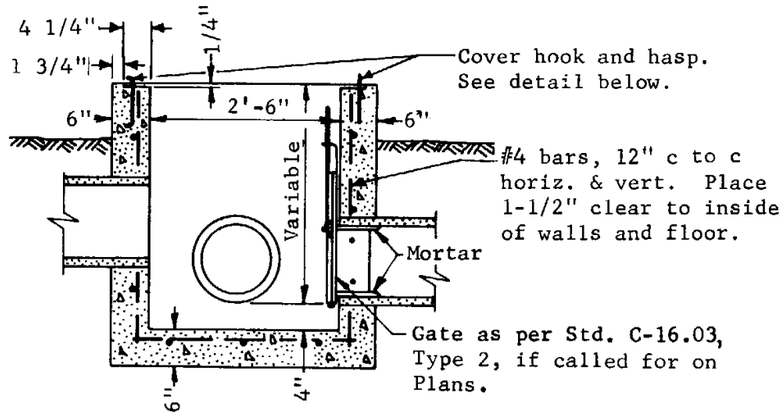

SECTION B-B

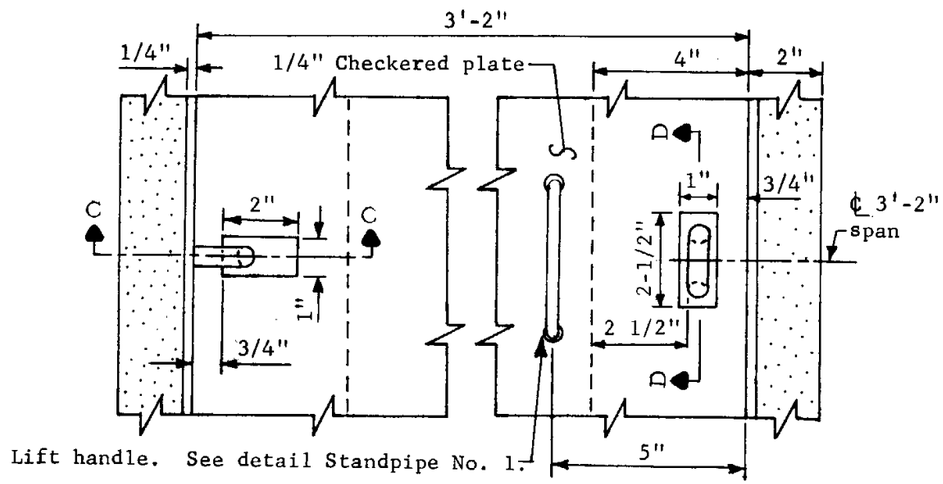

PLAN-LOCKING COVER

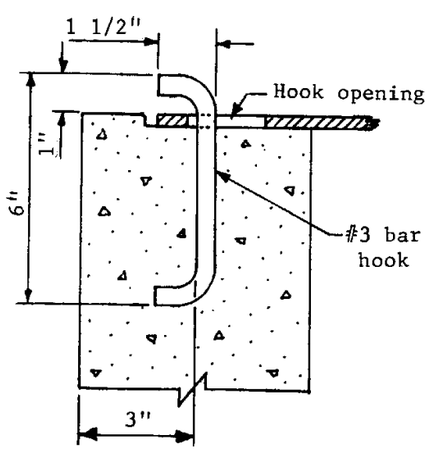

SECTION C-C

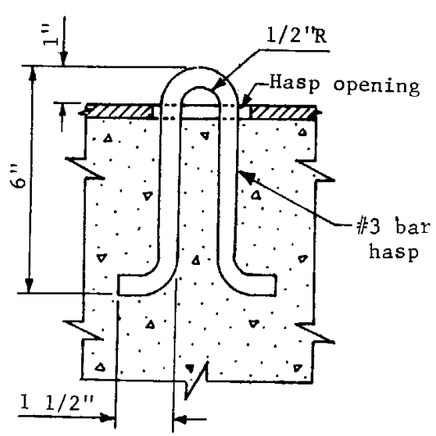

SECTION D-D

IRRIGATION STANDPIPE NO. 2

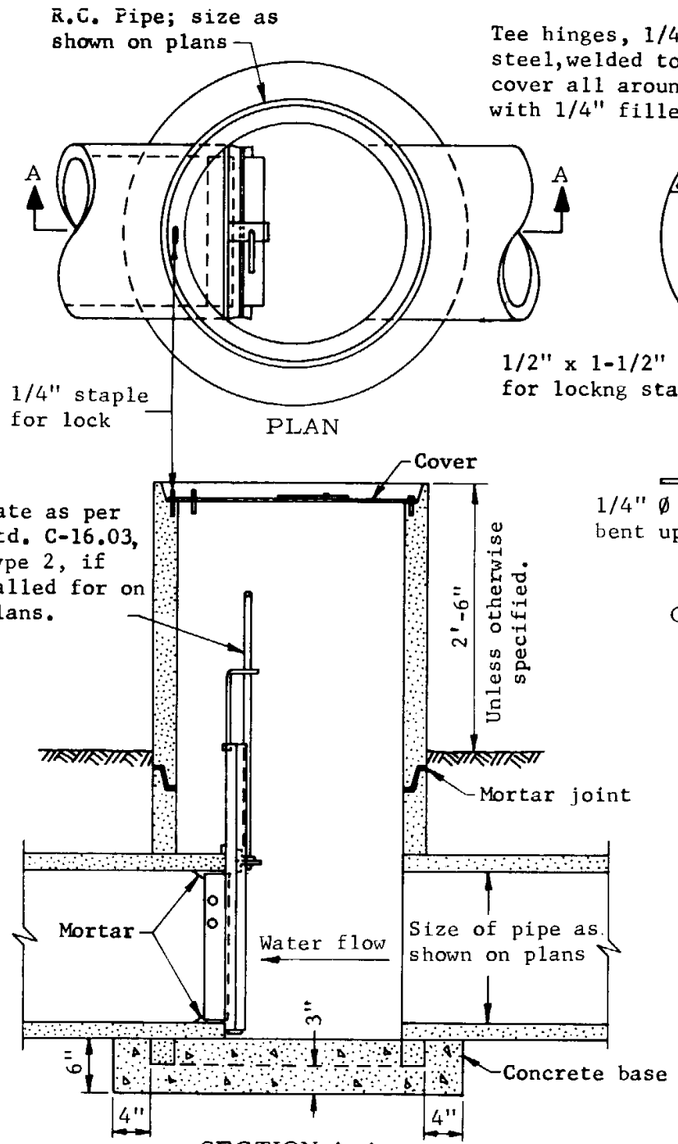

SECTION A-A

IRRIGATION STANDPIPE NO. 1

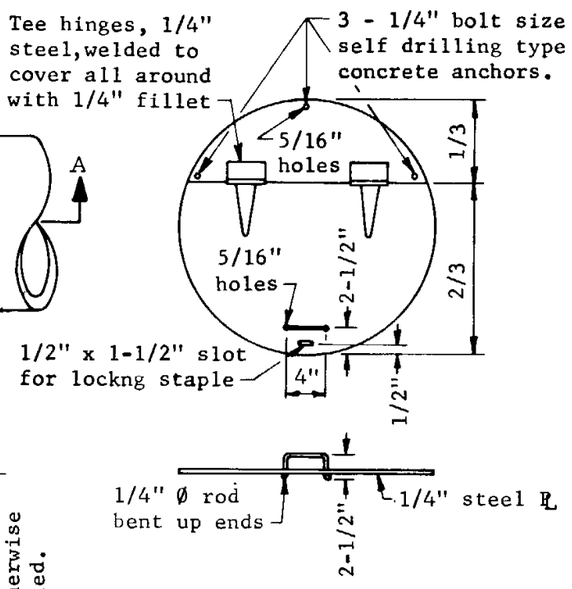

COVER FOR NO. 1 STANDPIPE

GENERAL NOTES

All concrete shall be Class A.

Structural steel shall be in accordance with ASTM A 36.

All cover steel and exposed appurtenances shall be given one shop coat of No. 1 paint.

Plans shall specify locked or bolted cover for Standpipe No. 2

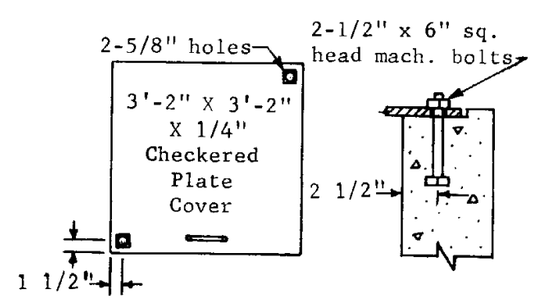

BOLTED COVER FOR STANDPIPE NO. 2

ARIZONA HIGHWAY DEPARTMENT
PLANS DIVISION

Rev

IRRIGATION STANDPIPE NO. 1 AND NO. 2

Drawn	D.G.	Drawing No.
Traced	R.A.F. 10-67	C-16.02
Checked	J.P.O. JPO 5-68	
Approved Engr. Plans	G Weidecker 5-68	

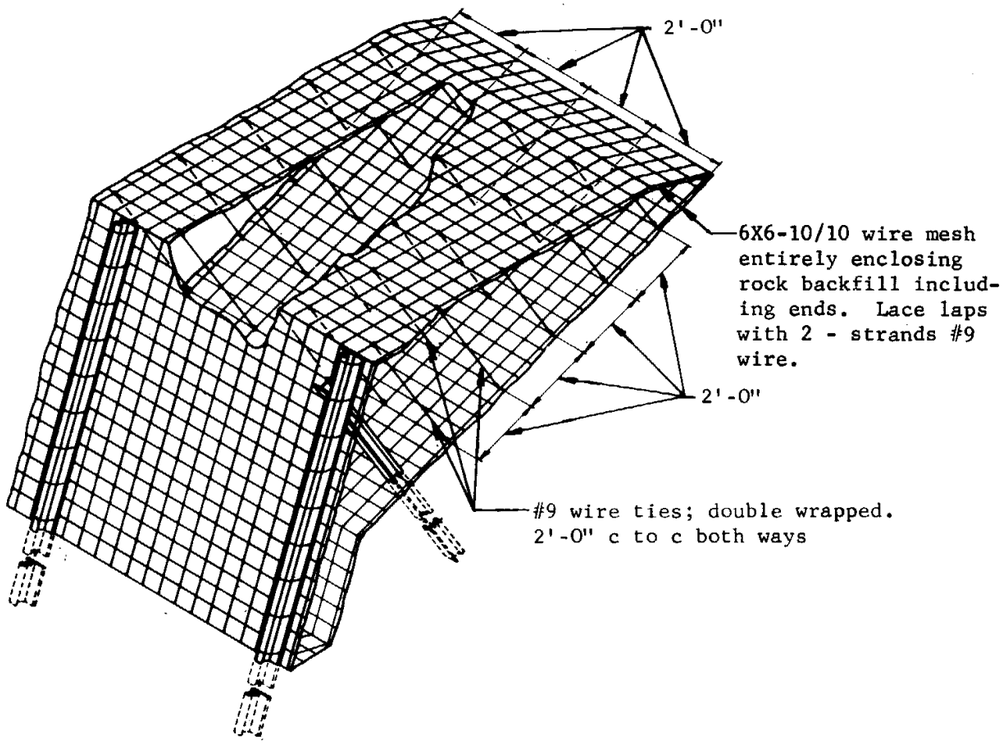

PERSPECTIVE
Drawn for Types 1 & 2. Type 3 similar.

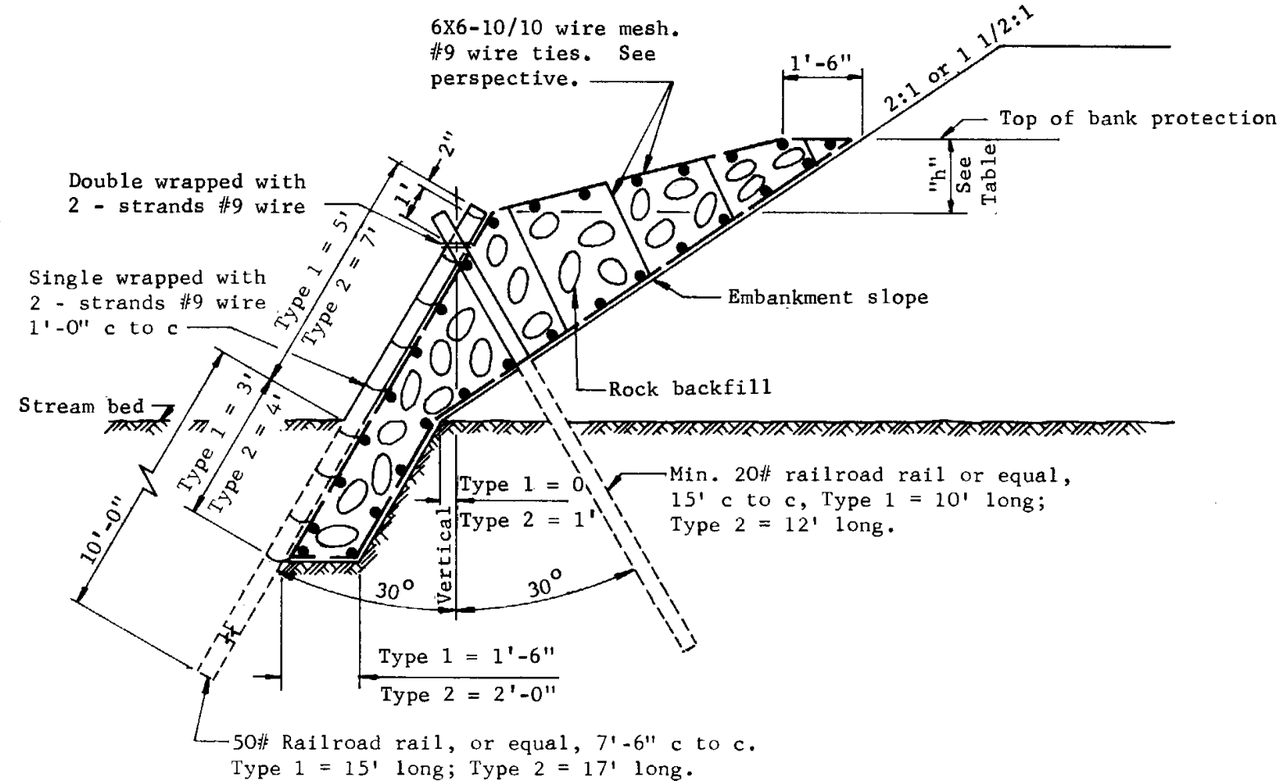

TYPE : TYPE 1 & 2 BANK PROTECTION

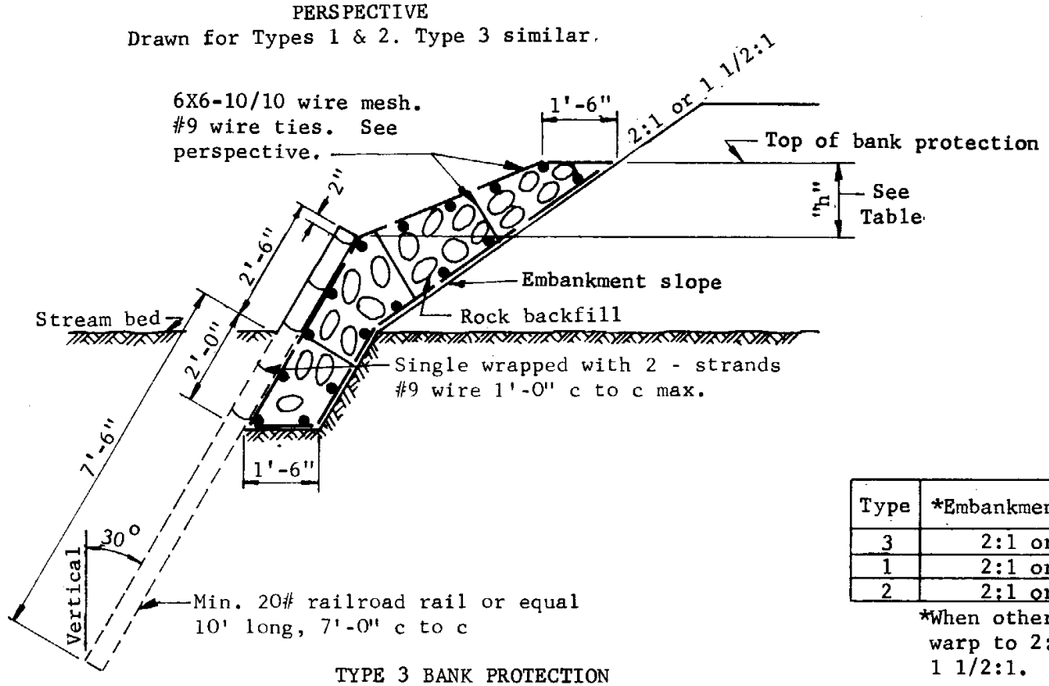

TYPE 3 BANK PROTECTION

Type	*Embankment slope rate	"h"	Top of bank protection above stream bed
3	2:1 or 1 1/2:1	0' to 2'	2' to 4'
1	2:1 or 1 1/2:1	0' to 3'	4' to 7'
2	2:1 or 1 1/2:1	0' to 6'	6' to 12'

*When other embankment slope rates are encountered, warp to 2:1 or 1 1/2:1; that is, warp 1:1 slope to 1 1/2:1.

GENERAL NOTES

Rock for backfill shall be sound and durable and shall not pass a 6" square opening.

ARIZONA HIGHWAY DEPARTMENT
CONSTRUCTION SECTION

Rev 3/71

BANK PROTECTION TYPE 1, 2, & 3

Drawn	H.A.K.	Drawing No.
Traced	R.A.F.	C-17.01
Checked		
Approved Asst. State Eng Const	E.F. Scudlin	

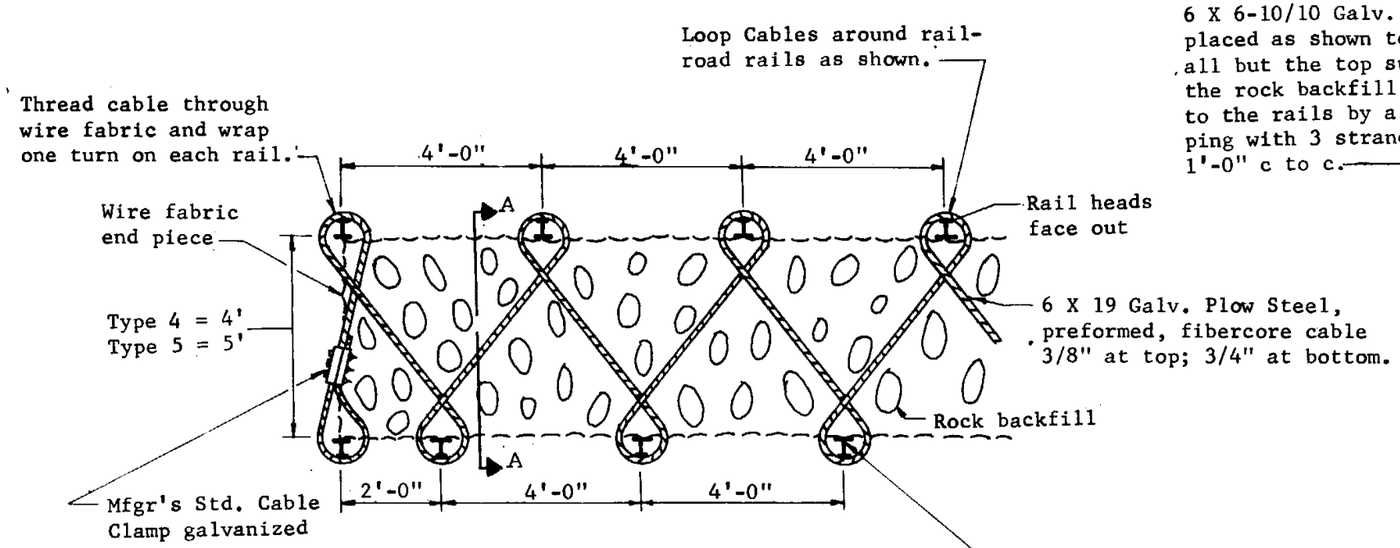

PLAN

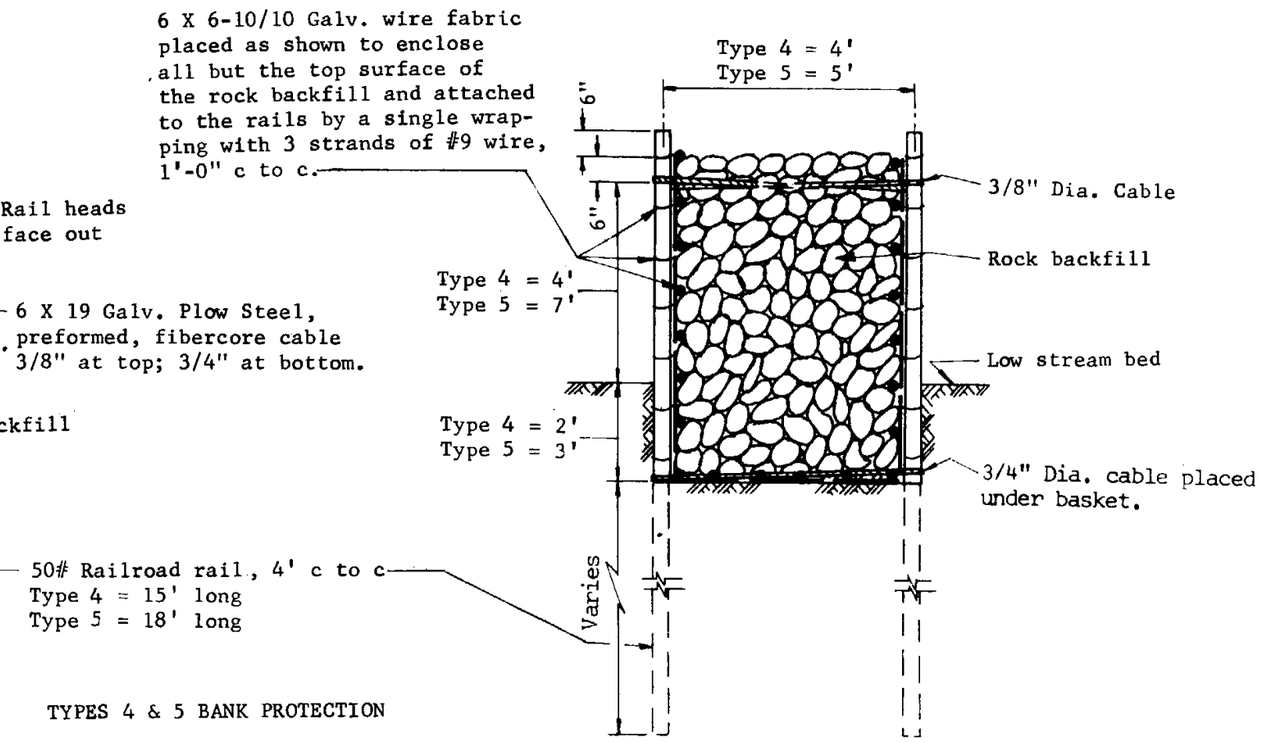

TYPES 4 & 5 BANK PROTECTION

SECTION A-A

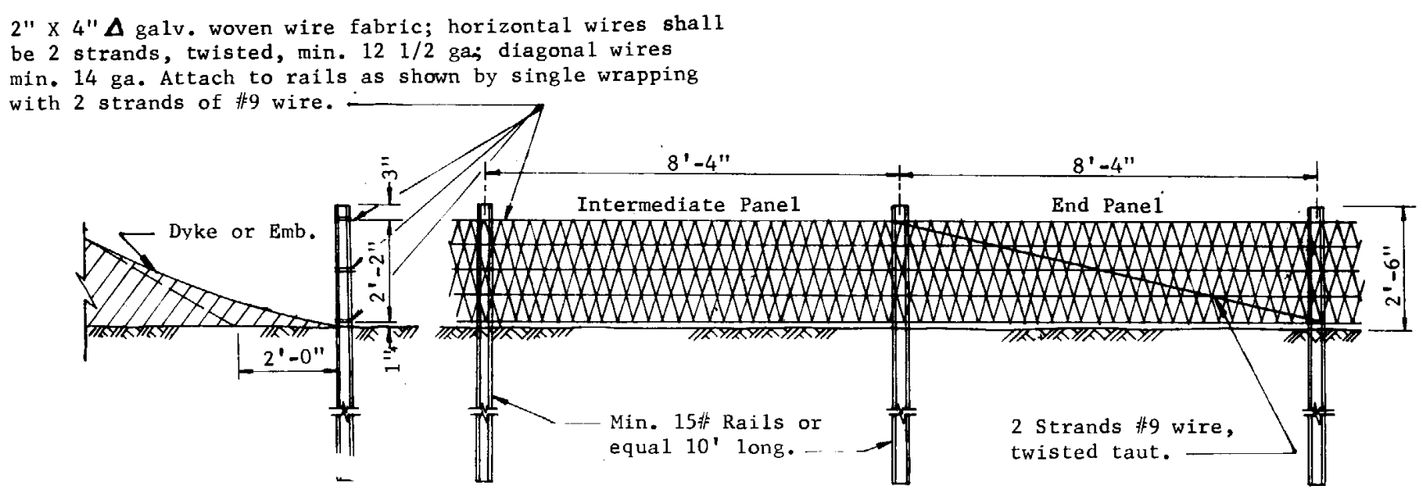

TYPE 6 BANK PROTECTION

GENERAL NOTES

Rock for backfill shall be sound and durable and shall not pass a 6" square opening.

ARIZONA HIGHWAY DEPARTMENT CONSTRUCTION SECTION		Rev 3/71 5/72 2/73
BANK PROTECTION RAIL AND WIRE TYPES 4, 5, & 6		
Drawn	H.A.K.	Drawing No.
Traced	S.L.T.	C-17.02
Checked		
Approved Asst. State Eng Const	G F Sandlin	

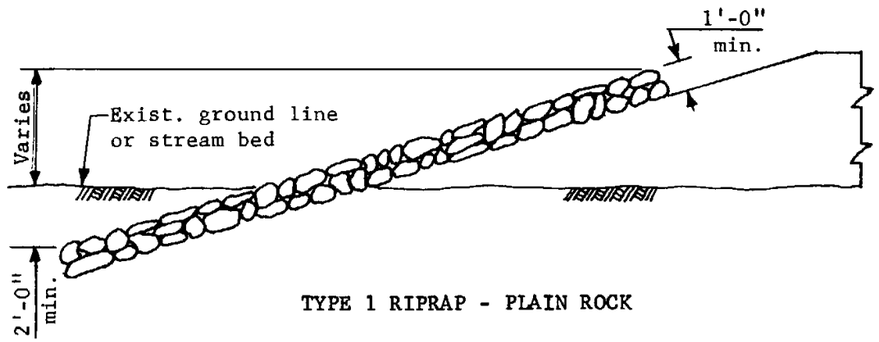

TYPE 1 RIPRAP - PLAIN ROCK

TYPE 2 RIPRAP - GROUTED ROCK

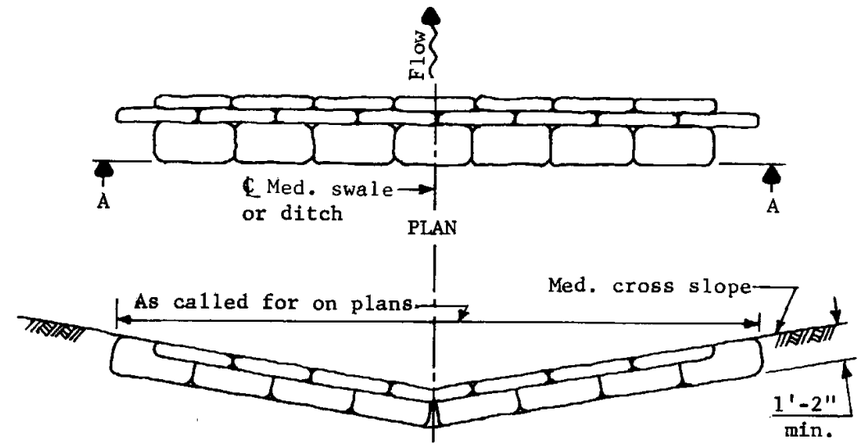

ELEVATION A-A

TYPE 4 RIPRAP - SACKED CONCRETE EROSION CHECK

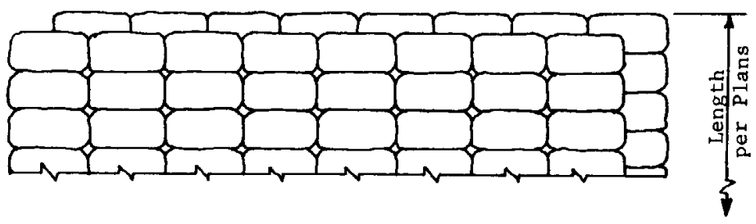

PLAN

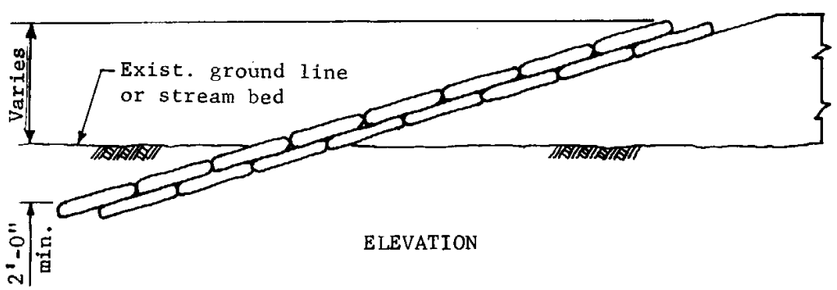

ELEVATION

TYPE 3 RIPRAP - SACKED CONCRETE

GENERAL NOTES
Grout for riprap may be pneumatically placed mortar.

ARIZONA HIGHWAY DEPARTMENT PLANS DIVISION			Rev
RIPRAP			
Drawn	D.G. 5-68	Drawing No.	
Traced	D.G. 5-68	C-17.03	
Checked	J.P.O. JPO 5-68		
Approved Engr. Plans	G.H. Heidecker 5-68		

HALF PLAN

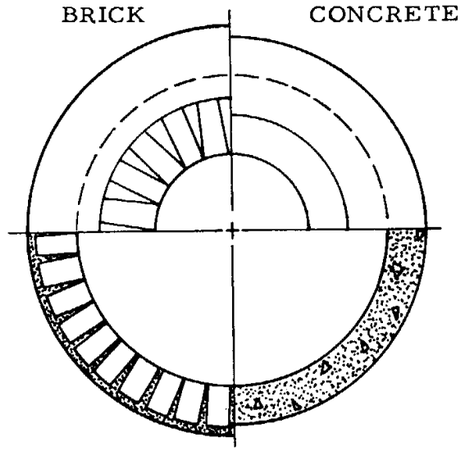

SECTION A-A

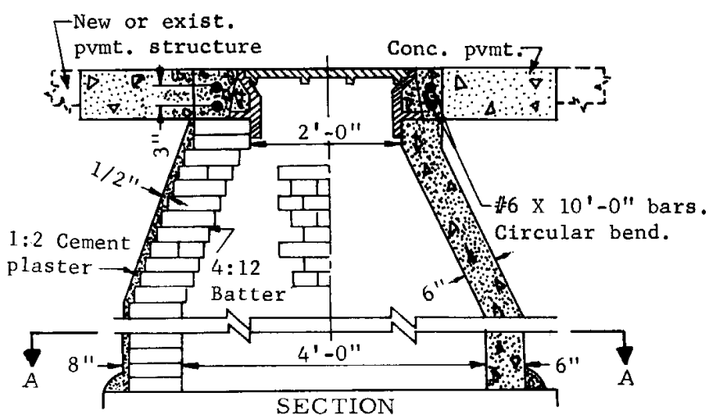

SECTION

BRICK MANHOLE NO. 1 | CONCRETE MANHOLE NO. 2

HALF PLAN
PIPES 36" I. D. & SMALLER

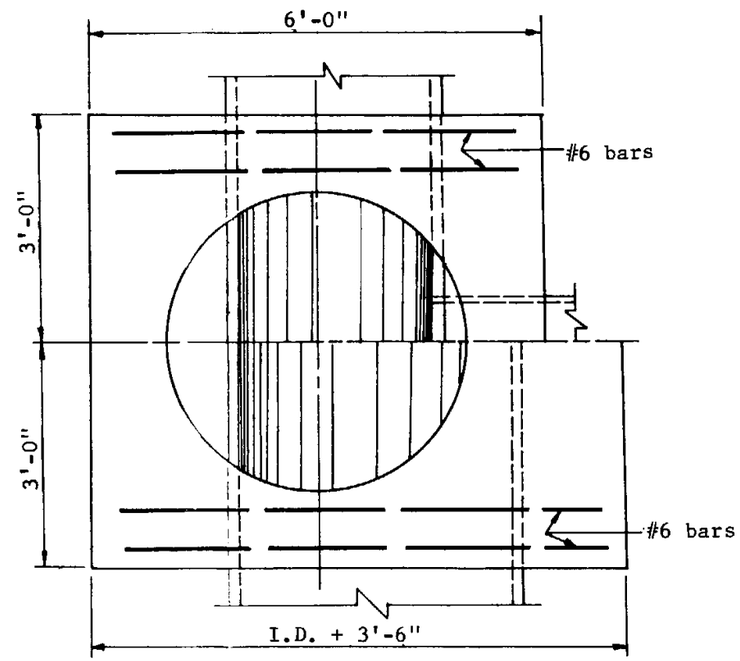

HALF PLAN
PIPES OVER 36" I. D.

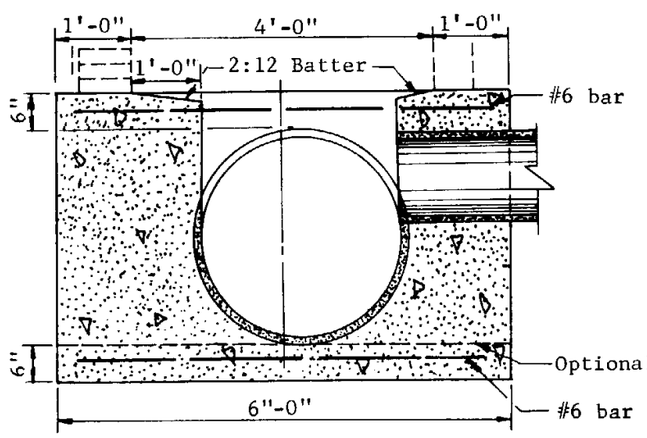

SECTION
STANDARD BASE STRUCTURE
FOR PIPES 6" TO 36" I. D.

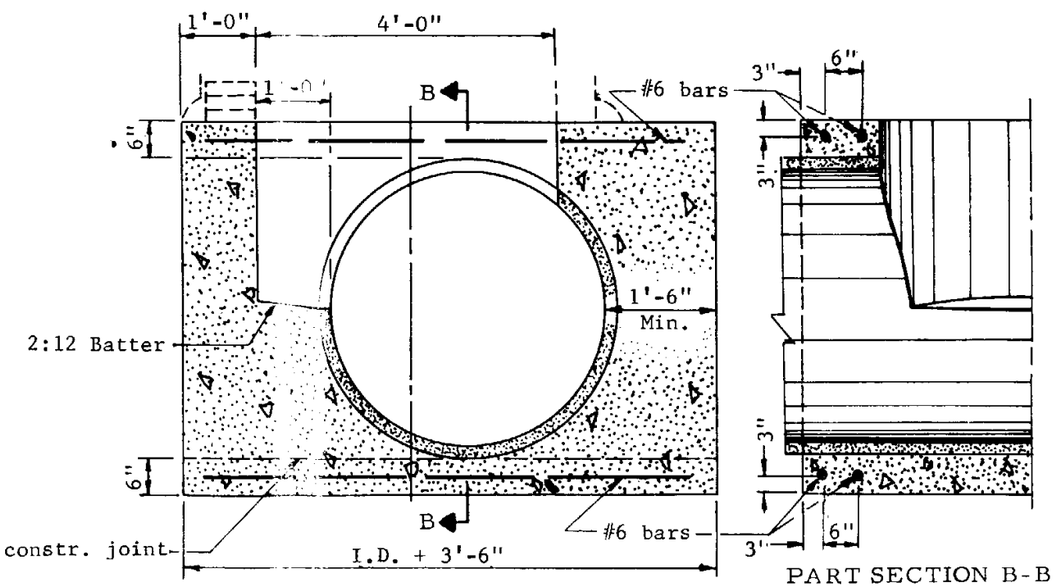

SECTION
STANDARD BASE STRUCTURE
FOR PIPES OVER 36" I. D.

PART SECTION B-B

GENERAL NOTES

All concrete shall be Class A.

Every fifth course of bricks shall be laid as stretchers.

Manhole frame and cover, Std. C-18.02, is shown. Other types may be substituted if noted on Plans.

For manhole cut replacement in bituminous or concrete pavement, see Std. C-7.03.

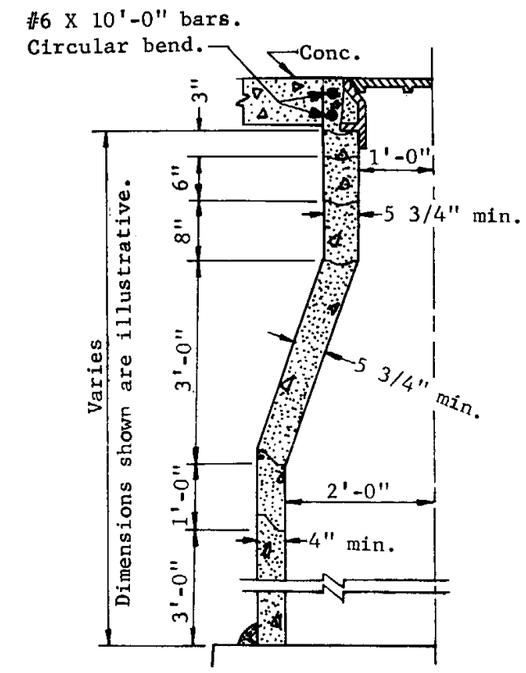

HALF SECTION
MANHOLE NO. 3
PRECAST REINFORCED CONCRETE

ARIZONA HIGHWAY DEPARTMENT PLANS DIVISION			Rev
MANHOLE DETAILS			
Drawn	R.E.W. - 3-58	Drawing No.	
Traced	S.L.T. - 5-67		
Checked	J.P.O. JPO 5-68	C-18.01	
Approved Engr. Plans	W Weidecker 5-68		

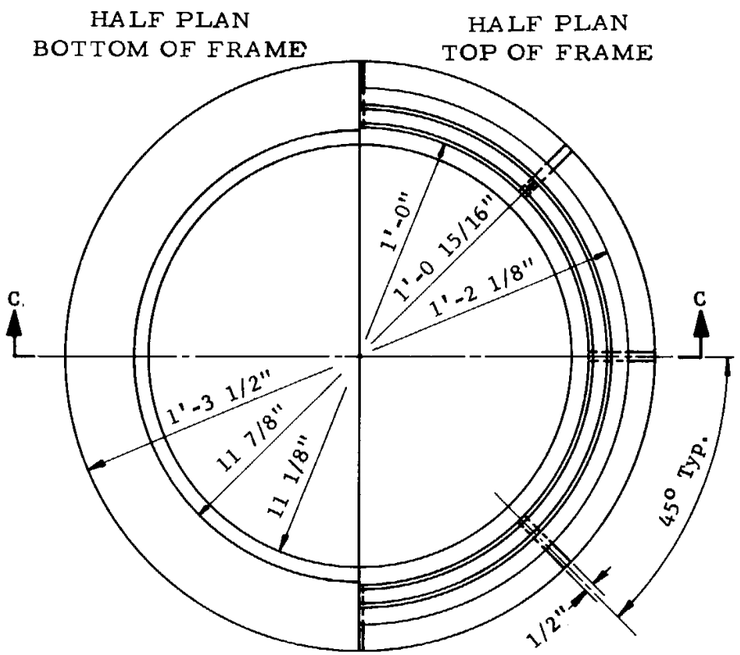

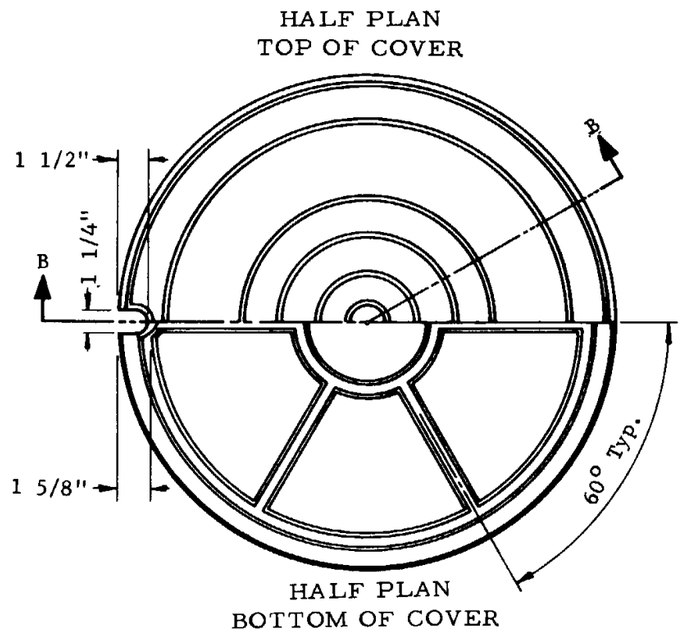

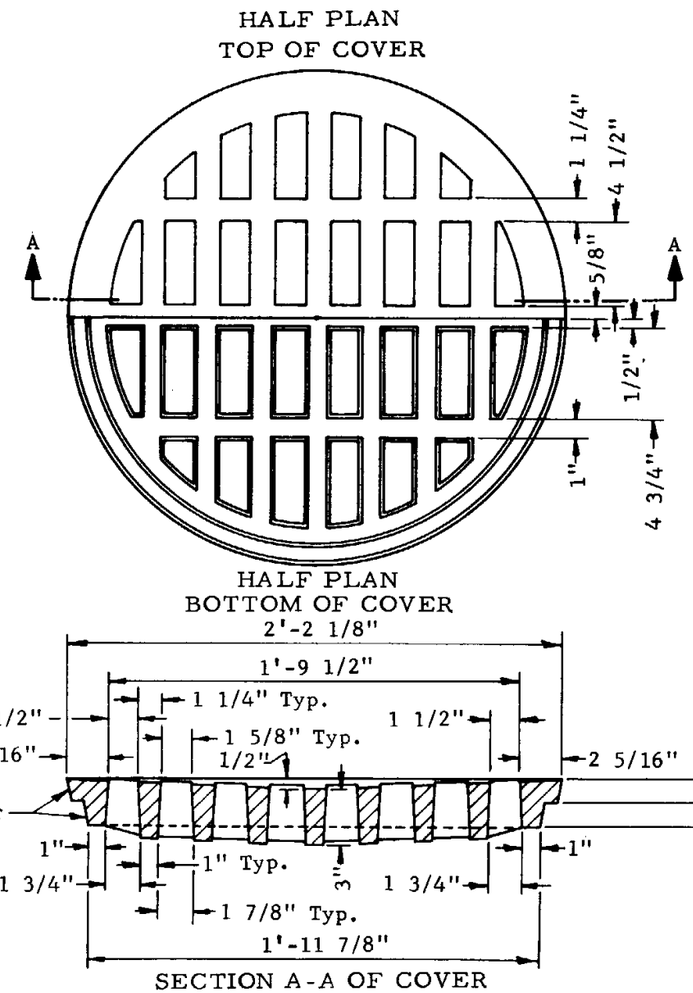

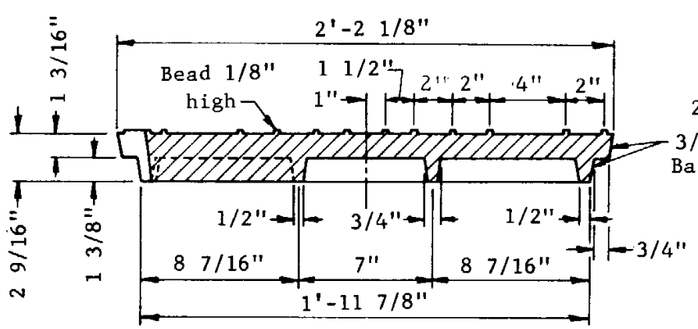

SECTION B-B OF COVER

TYPE A COVER

Approx. weight 190 lbs.

SECTION A-A OF COVER

TYPE B COVER

Approx. weight 280 lbs.

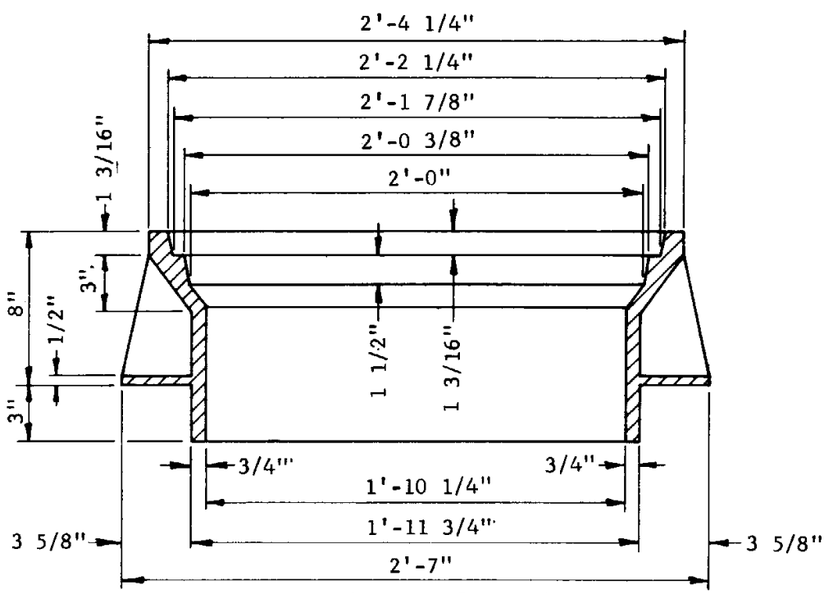

SECTION C-C OF FRAME

Approx. weight 260 lbs.

GENERAL NOTES

Type C cover shall be the same as Type A except that the cover shall be vented with at least six one inch holes, equally spaced in a circle 8 1/2" from the center of the cover.

Type A cover shall be used unless otherwise specified.

The bearing faces shall be machined so that the cover will have a uniform bearing in any position in the frame.

ARIZONA HIGHWAY DEPARTMENT
PLANS DIVISION

Rev

MANHOLE-CAST IRON FRAME & COVER DETAILS

Drawn	O.K. 10-35	Drawing No.
Traced	R.A.F. 6-67	C-18.02
Checked	J.P.O. 5-68	
Approved Engr. Plans	5-68	

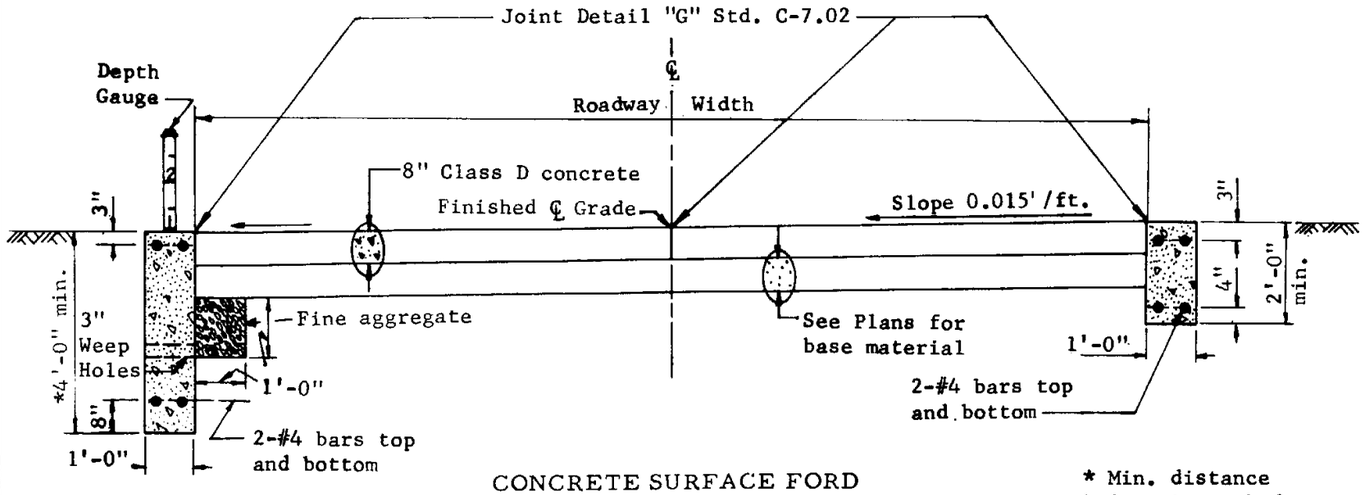

CONCRETE SURFACE FORD
CONCRETE WALLS

* Min. distance below stream bed

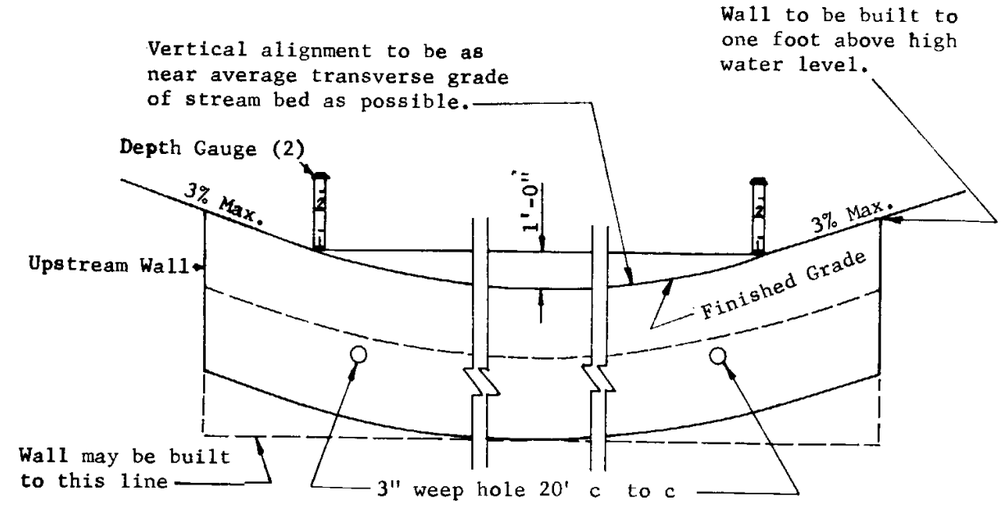

ELEVATION LOOKING UPSTREAM

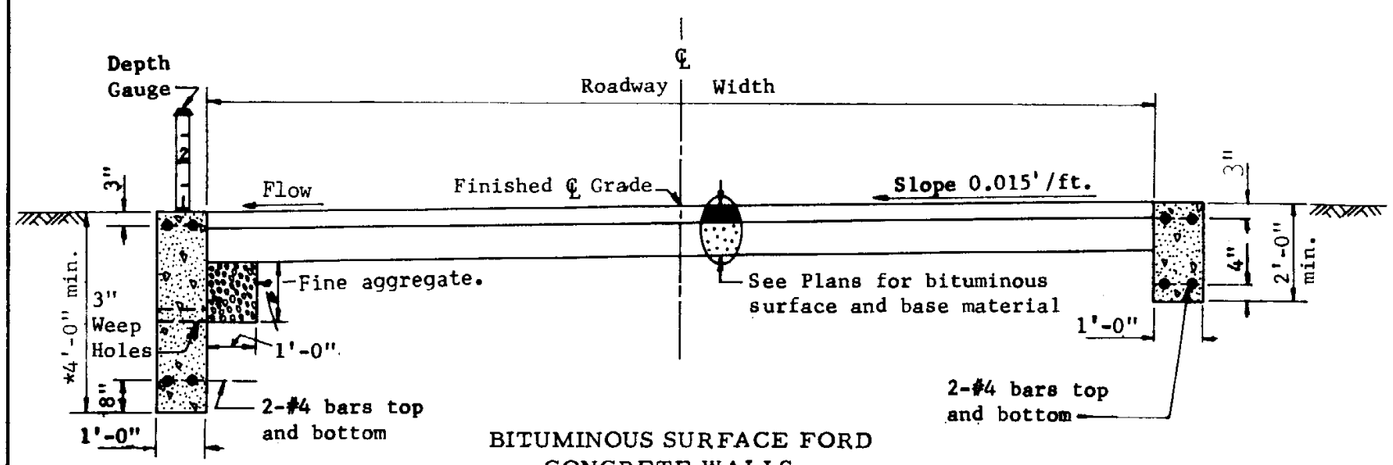

BITUMINOUS SURFACE FORD
CONCRETE WALLS

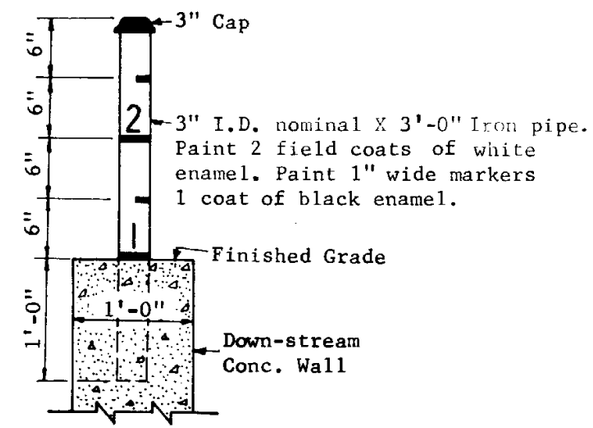

DEPTH GAUGE

GENERAL NOTES

Ford walls to be Class "A" Concrete.

* Min. distance below stream bed

ARIZONA HIGHWAY DEPARTMENT
CONSTRUCTION SECTION

FORD CONCRETE WALLS

Drawn	C.B.B. - 7-45	Drawing No.
Traced	S.L.T. - 5-67	C-19.01
Checked	J.P.O. JPO 5-68	
Approved Asst. State Eng Const.	E F Sandlin	

Rev 12-5-68 3/71

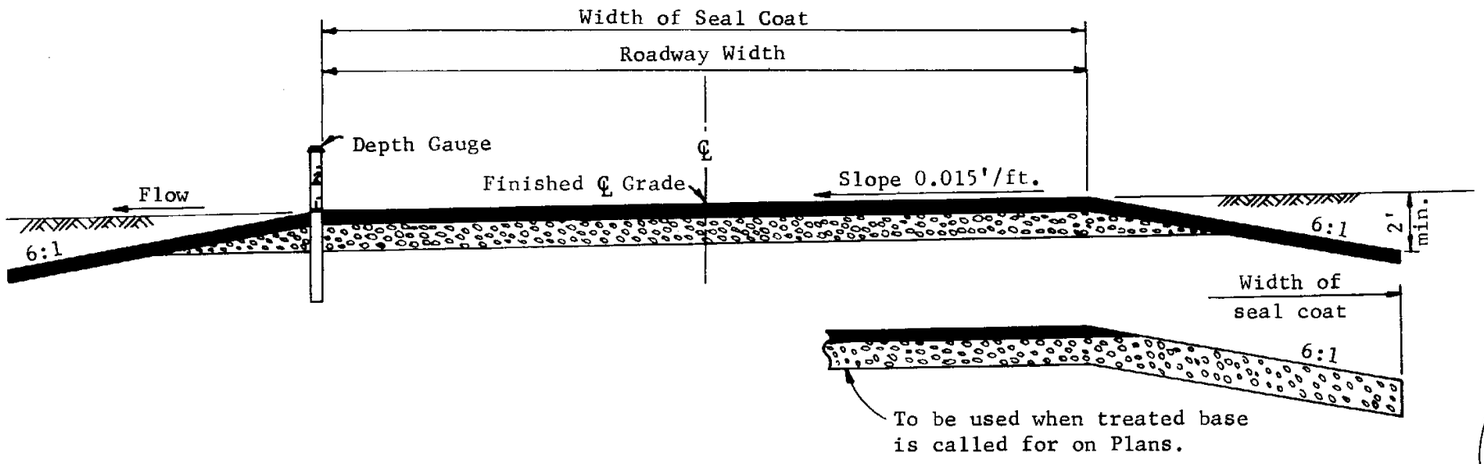

TYPE 1
BITUMINOUS SURFACE FORD

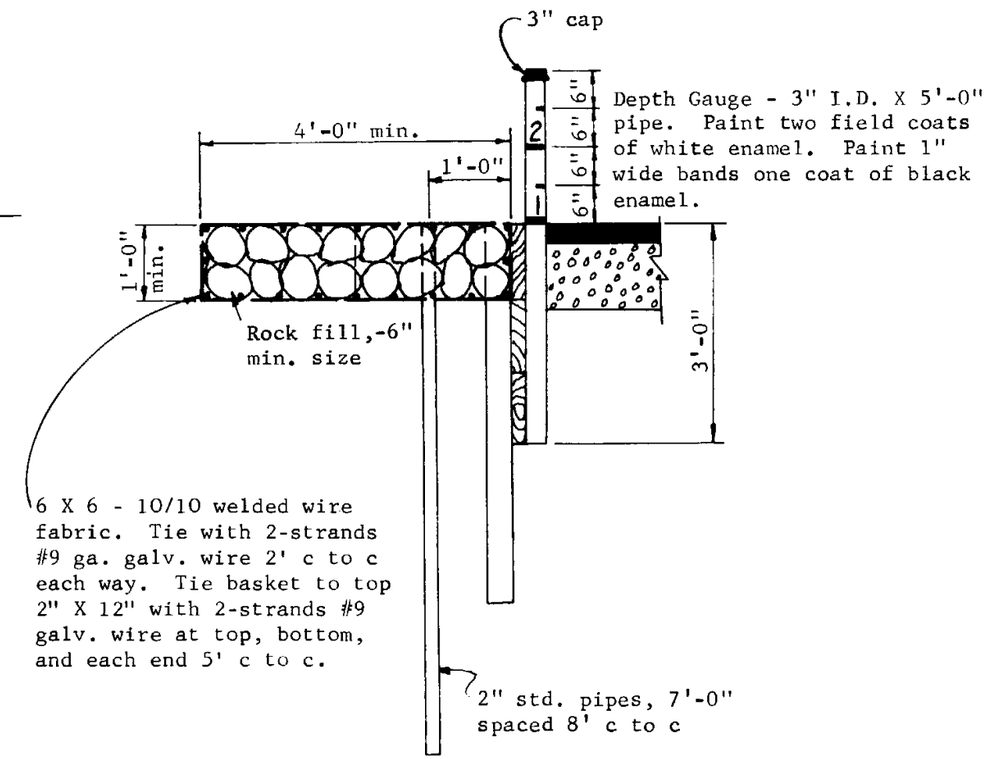

DETAIL A

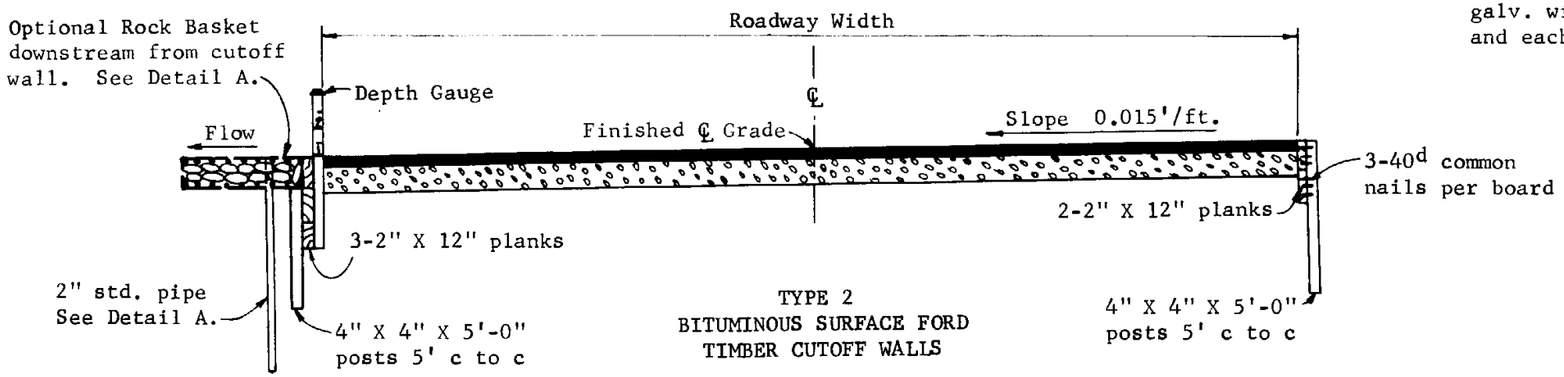

TYPE 2
BITUMINOUS SURFACE FORD
TIMBER CUTOFF WALLS

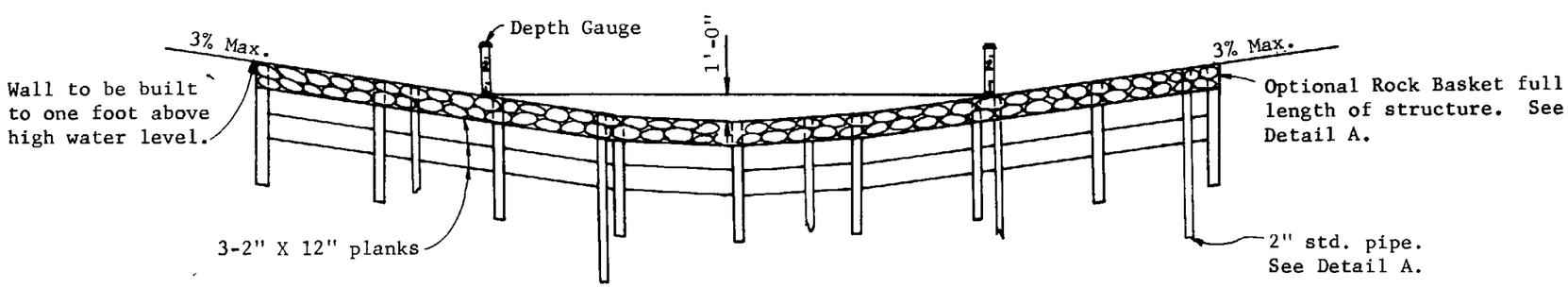

ELEVATION - TYPE 2

GENERAL NOTES

All timber shall be rough, pressure treated and unpainted.

Rock basket, full length of structure shall be included only when called for on Plans.

See Plans for bituminous surface and base material details.

Galvanize pipes in accordance with ASTM A123.

ARIZONA HIGHWAY DEPARTMENT PLANS DIVISION			Rev 12-5-68
FORDS			
Drawn	C.B.B. 7-45	Drawing No.	
Traced	S.L.T. 5-67	C-19.02	
Checked	J.P.O. JPO 5-68		
Approved Engr. Plans	G Weidner 5-68		

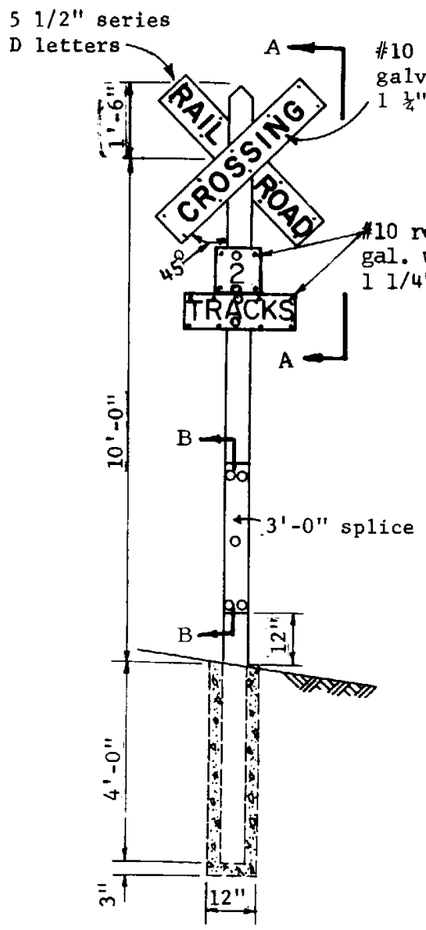

RAILROAD CROSSING SIGN

Concrete may be job mix concrete of not less than 5 sacks per cu. yd.

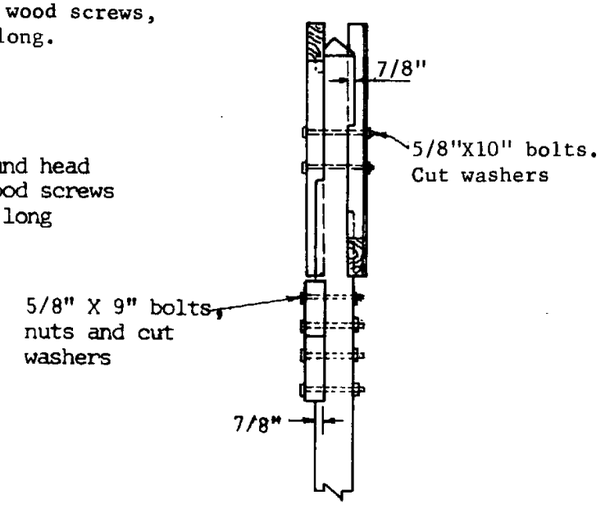

SECTION A-A

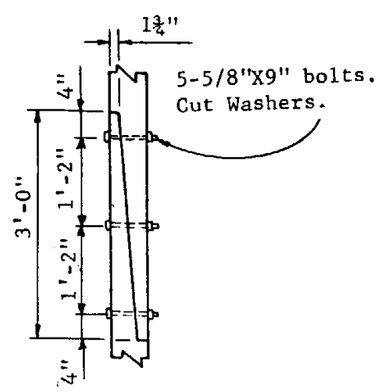

SECTION B-B

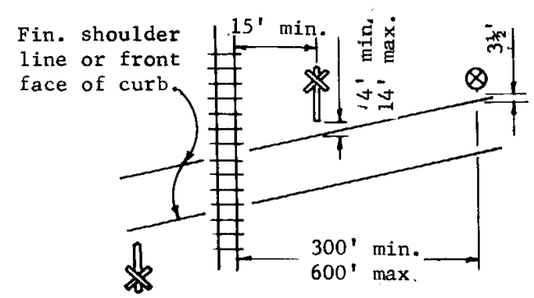

LOCATION PLAN

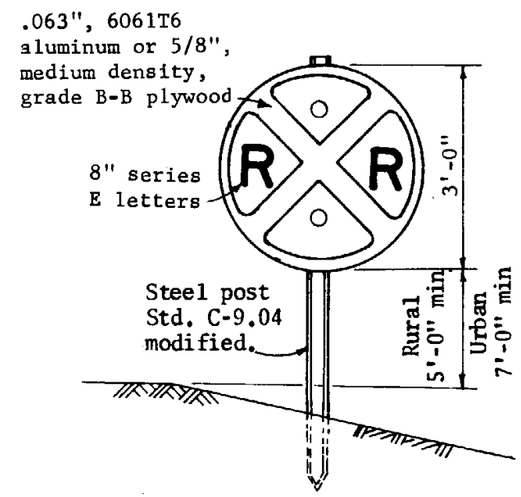

RAILROAD ADVANCE WARNING SIGN

GENERAL NOTES

All wood shall be redwood or cedar, S4S and untreated.

Crossing and advance warning signs shall be placed at each approach with steel or aluminum message panels placed only on the side facing traffic.

"Number of tracks" panels shall be deleted for single track crossing.

All crossing sign message panel background shall be silver-white, flat top reflective sheeting with black, opague letters.

Advance warning sign traffic face background shall be highway yellow, flat top reflective sheeting with black, opague letters, border and symbol.

All wood and metal surfaces not covered by reflective sheeting shall be primed and finished with two coats of No. 11 white enamel.

Reflective sheeting shall be applied in accordance with the manufacturers specifications.

All lettering shall be in accordance with A.H.D. Traffic Control Manual

Number Panel: 9" X 8 1/2" X 16 ga. steel or .063 aluminum panel mounted on 9" X 8 1/2" X 1 5/8" redwood or cedar. 5 1/2" series D letters.

Track Panel: 2'-3" X 8" X 16 ga. steel or .063 aluminum panel mounted on 2'-3" X 1 5/8" redwood or cedar. 4" series D letters.

ARIZONA HIGHWAY DEPARTMENT CONSTRUCTION SECTION		Rev 5/72
RAILROAD CROSSING SIGNS		
Drawn	J.A.W	Drawing No.
Traced		C-20.01
Checked	R.W	
Approved Asst. State Eng Const.	E. Bandelin	

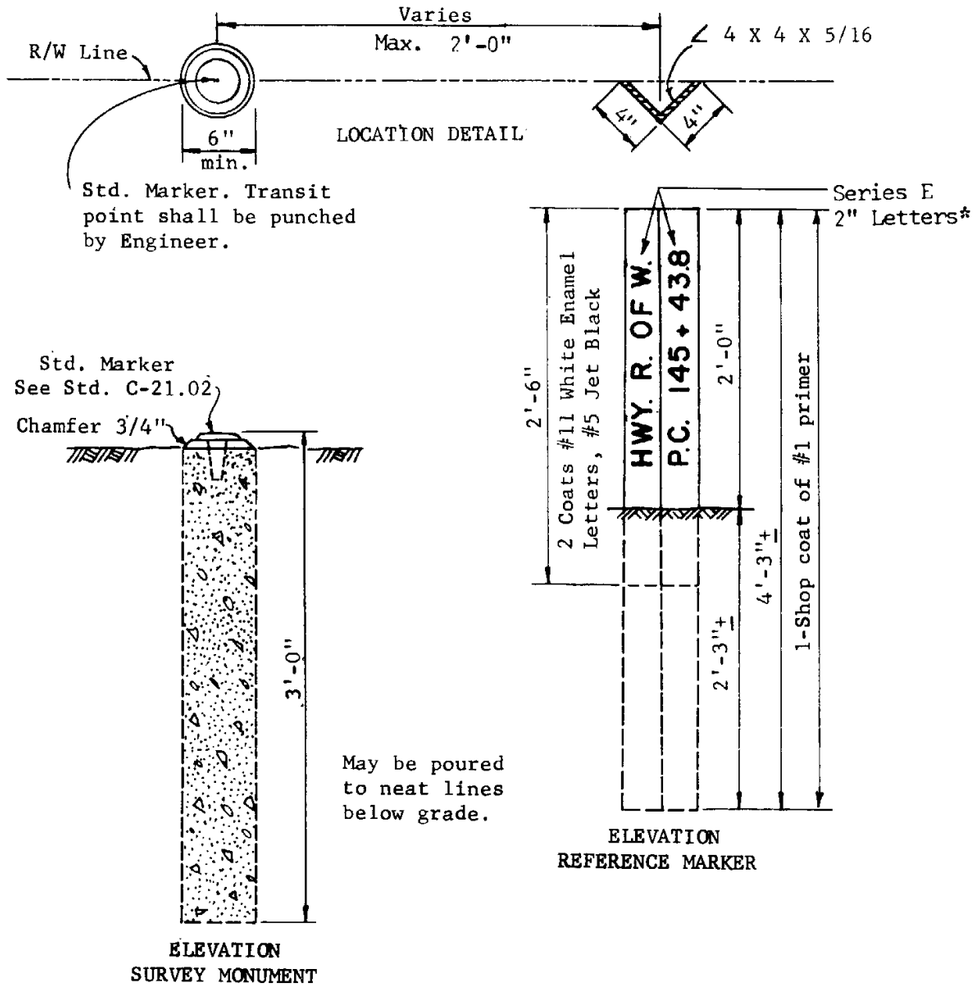

RIGHT OF WAY MARKER

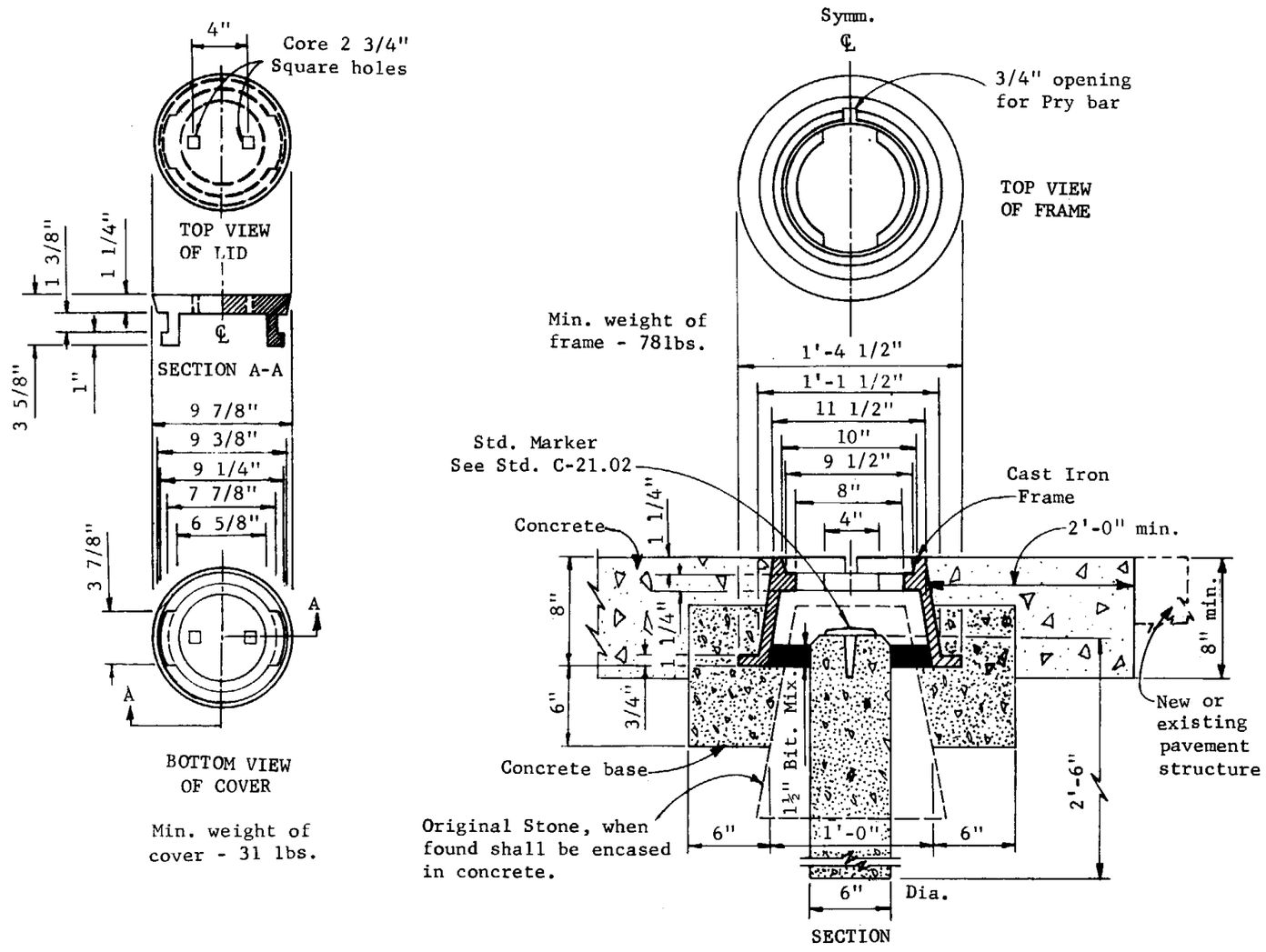

SURVEY MONUMENT, FRAME AND COVER

GENERAL NOTES

A Survey Monument, Frame and Cover, complete and in place, shall be considered as a unit. In bituminous pavement, frame and cover shall be set after A. C. is placed.

A Right of Way Marker, consisting of Survey Monument and Reference Marker, complete and in place, shall be considered as a unit. Right of Way Markers shall be placed as shown on Plans or as directed by the Engineer.

All concrete shall be Class A.

*See A.H.D. Traffic Control Manual

ARIZONA HIGHWAY DEPARTMENT CONSTRUCTION SECTION		Rev 2/72 5/72
SURVEY MONUMENT, FRAME AND COVER RIGHT OF WAY MARKER		
Drawn		Drawing No.
Traced	S.L.T.	C-21.01
Checked	J.P.O.	
Approved Asst. State Eng Const.	G. Sandlin	

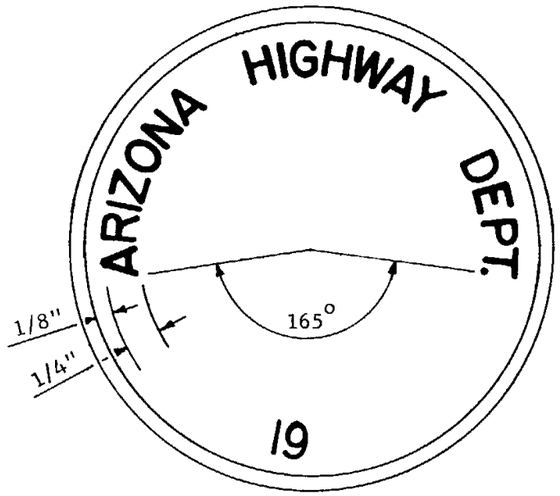

PLAN

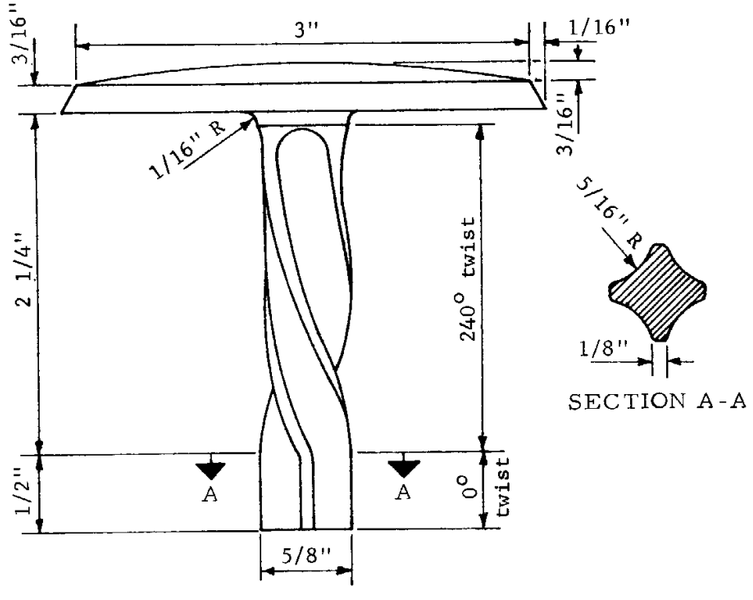

SECTION A-A

ELEVATION

STANDARD MARKER

FOR USE AS BENCH, SURVEY MONUMENT AND R/W MARKERS

GENERAL NOTES

Standard Marker shall be made of brass or bronze.

Standard Marker shall be furnished by the State.

Bench marks will be established, by the Engineer, on headwalls, bridge curbs or other permanent structures.

ARIZONA HIGHWAY DEPARTMENT PLANS DIVISION			Rev
STANDARD MARKER			
Drawn	D.G. 2-68	Drawing No.	
Traced	D.G. 2-68		
Checked	J.P.O. JPO 5-68	C-21.02	
Approved Engr. Plans	H Heidecker 5-69		

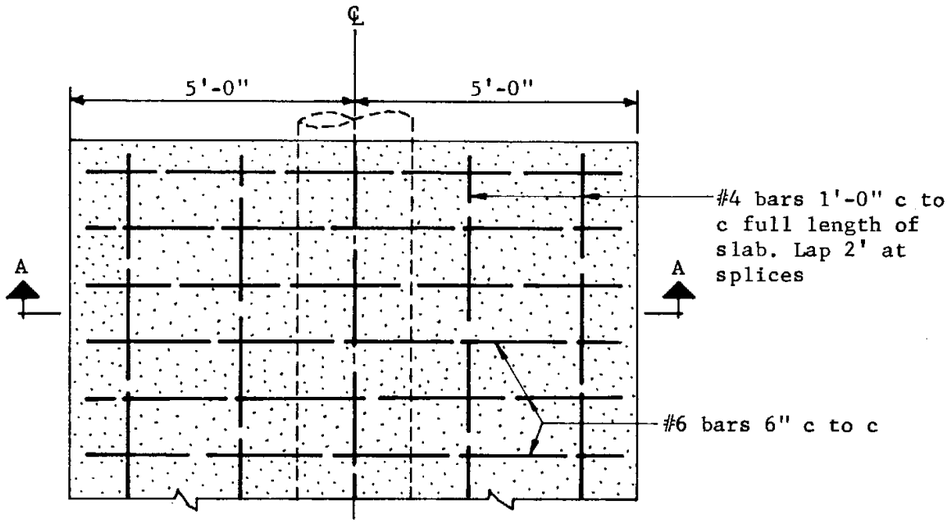

PLAN

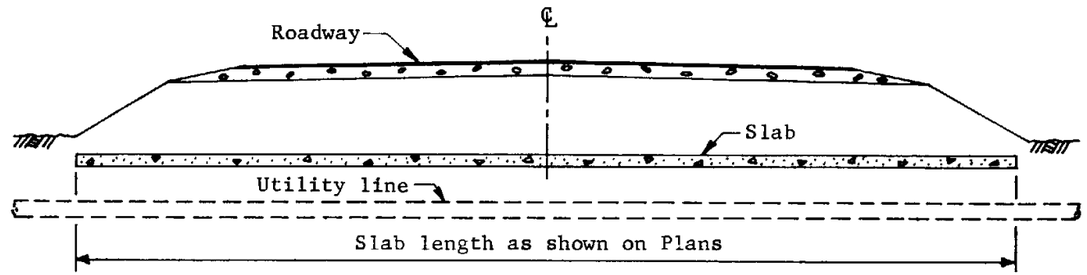

CROSS SECTION

FOR SINGLE INSTALLATION

Quantities per ft. of slab length	
Concrete	Reinforcing Steel
0.31 C.Y.	35.22 lbs.

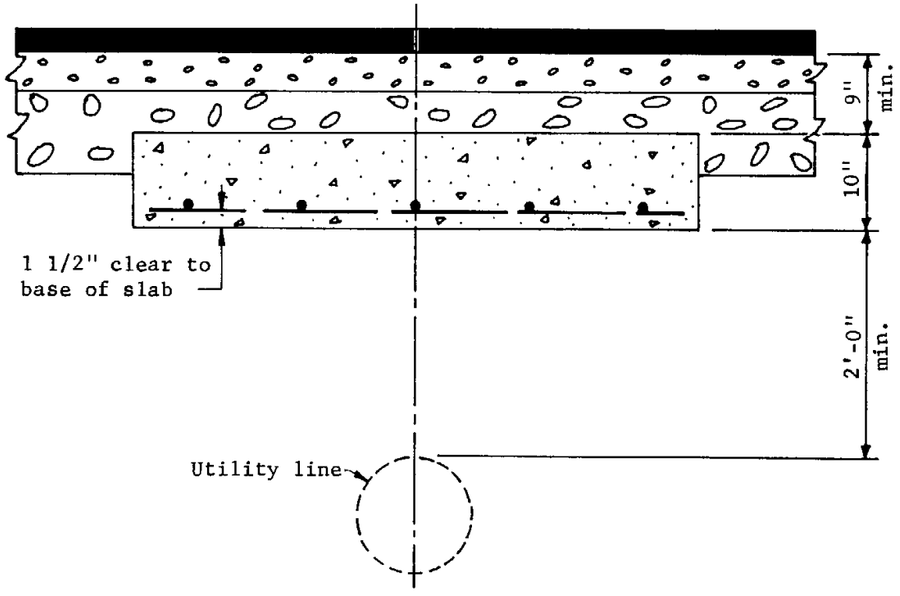

SECTION A-A

GENERAL NOTES
Concrete shall be Class A.

ARIZONA HIGHWAY DEPARTMENT
PLANS DIVISION

SLAB OVER UTILITY LINE

Drawn	L.O.M. 5-65	Drawing No.
Traced	D.G. 3-67	C-22.01
Checked	J.P.O. JPO 5-68	
Approved Engr. Plans	W Heidecker 5-68	

Rev