Tom Conner

ARIZONA HIGHWAY DEPARTMENT

ROADWAY CONSTRUCTION

STANDARDS

1969

"C"

HIGHWAY PLANS SERVICES

TABLE OF CONTENTS

DRAWING NO.	SUBJECT
C- 1.01	Plans Symbols
C- 1.02	
C- 1.03	
C- 2.01	Slopes, Interstate and Class A-A Roadways
C- 2.02	Slopes, Class A and B Roadways
C- 2.03	Slopes, Class C and D Roadways
C- 2.04	Parabolic Crown
C- 2.05	
C- 2.06	
C- 3.01	Ditches
	Dykes
C- 3.02	
C- 3.03	
C- 4.01	Concrete Spillway, Inlet & Outlet
	Embankment Curb
C- 4.02	Spillway Inlet Corrugated Metal Pipe
	Downdrain, Outlet
C- 4.03	Concrete Spillway Length Table
C- 4.04	Corrugated Metal Pipe Downdrain Length Table
C- 4.05	
C- 4.06	
C- 5.01	Curb, Gutter, Sidewalk and Driveway Details
C- 5.02	Curb and Gutter Measurement and
	Street Intersection Grades
C- 5.03	
C- 5.04	
C- 6.01	Turnout
	Driveway Layout
C- 6.02	Detour Entrance Design Table
C- 6.03	
C- 6.04	
C- 7.01	Transverse Joints for
	Portland Cement Concrete Pavement
C- 7.02	Longitudinal Joints for
	Portland Cement Concrete Pavement
C- 7.03	Pavement Cut Replacement
C- 7.04	
C- 7.05	
C- 8.01	Exit Ramp Geometrics
C- 8.02	Entrance Ramp Geometrics
	Ramp Nose Paving Detail
C- 8.03	
C- 8.04	
C- 9.01	Delineator, Usage
C- 9.02	Delineator, Face Plate Details

DRAWING NO.	SUBJECT
C- 9.03	Delineator, Placement
C- 9.04	Delineator, Post Mounting Details
C- 9.05	Delineator, Mainline Spacing
C- 9.06	Delineator, Interchange Spacing
C- 9.07	Delineator, Spacing Table
C- 9.08	Delineator, Snow Marker
C- 9.09	
C- 9.10	
C-10.01	Guard Rail Steel, Single Face Details
C-10.02	Guard Rail Steel, Double Face & Misc. Details
C-10.03	Guard Rail Steel, Approach End Treatment
C-10.04	Guard Rail Steel, Bridge Approach Installation
C-10.05	Guard Rail Steel, Flare to Median
C-10.06	Guard Rail Steel, Typical Installations
C-10.07	
C-10.08	Concrete Median Barrier Details
C-10.09	Concrete Median Barrier Transition
C-10.10	Median Glare Screen
C-10.11	Chain Link and Cable Barrier Fence
C-10.12	
C-10.13	
C-11.01	Cattle Guard
C-11.02	Cattle Guard, Ranch
C-11.03	Cattle Guard, Railroad
C-11.04	Cattle Guard, Drainage
C-11.05	
C-11.06	
C-12.01	Line Fence and Gates, Steel Posts
C-12.02	Supplemental Fence Details
C-12.03	Fence, Chain Link
C-12.04	Fence, Industrial Type, Fabricated Wire
C-12.05	Barrier Fence
	Barrier Post
C-12.06	
C-12.07	
C-13.01	Pipe Culvert Installation
C-13.02	Reinforced Concrete Pipe Placement
C-13.03	Fill Heights for Reinforced Concrete Pipe
C-13.04	End Section, Reinforced Concrete Pipe
C-13.05	End Section, Corrugated Metal Pipe & Pipe Arch
C-13.06	Design Fill Heights for Corrugated Metal Pipe
C-13.07	Corrugated Metal Pipe Fill Height Design Data
C-13.08	Corrugated Metal Pipe Arch Design Fill Heights
C-13.09	Corrugated Metal Pipe Arch Fill Height Design Data
C-13.10	Corrugated Metal Pipe Arch Fill Heights
C-13.11	Structural Excavation Payment Limits
	Special Backfill Placement
C-13.12	

DRAWING NO.	SUBJECT
C-13.13	
C-14.01	Headwalls-Straight, "L" and "U" Types
C-14.02	Pipe Headwalls, 42" to 84"
C-14.03	Drop Inlet Headwalls
C-14.04	
C-14.05	
C-15.01	Catch Basin-Type 1, Combination
C-15.02	Catch Basin-Type 2, Combination, Adjustable Curb
C-15.03	Catch Basin-Type 3, Curb Opening Only
C-15.04	Catch Basin-Type 4, Grate Opening Only
C-15.05	Catch Basin-Type 5, Combination Sweeper
C-15.06	Catch Basin Grate, Longitudinal Bars
C-15.07	Catch Basin Grate, Transverse Bars
C-15.08	Portland Cement Concrete Depressed Apron
C-15.09	Catch Basin, Median
C-15.10	Catch Basin, Median Dyke
C-15.11	
C-15.12	
C-16.01	Irrigation Headwalls
C-16.02	Irrigation Standpipes
C-16.03	Irrigation Valve and Gates
C-16.04	
C-16.05	
C-17.01	Bank Protection-Types 1, 2, & 3
C-17.02	Bank Protection-Types 4, 5, & 6
C-17.03	Riprap
C-17.04	
C-17.05	
C-18.01	Manhole Details
C-18.02	Manhole Frame and Cover Details
C-18.03	
C-18.04	
C-19.01	Ford, Concrete Walls
C-19.02	Fords
C-19.03	
C-19.04	
C-20.01	Railroad Crossing Signs
C-20.02	
C-20.03	
C-21.01	Survey Monument and Right of Way Markers
C-21.02	Standard Markers
C-21.03	
C-21.04	
C-22.01	Slab over Utility Line

GENERAL NOTE: The term Plans, as used herein, shall refer to the Roadway Construction Plans.

STATE OR NATIONAL LINE
COUNTY LINE
TOWNSHIP OR RANGE LINE
SECTION LINE
QUARTER SECTION LINE
FOREST OR RESERVATION LINE — Shading on inside of line
HIGHWAY R/W LINE
CONTROL OF ACCESS LINE — BLU ZIP NO. 333 B CHART PAK 256 TAA 1/8" WIDE — Shading on outside of line
UNFENCED PROPERTY — Blu-Zip No. 113
CITY LIMITS
SECTION AND QUARTER CORNERS
COMBINED CURB & GUTTER — Depressed for driveway — 20' D.C. — Existing
SIDE ROAD TURNOUT (1) (2) — New — Existing
GROUND LINE
EXISTING ROAD (2) — Width & type
OBLITERATE PAVEMENT (2) — Blu-Zip No. 438
NEW CONCRETE PAVEMENT (1) — Blu-Zip No. 340
NEW BIT. MIX. PAVEMENT (1) — Blu-Zip No. 309
EXISTING PAVEMENT (2) — Blu-Zip No. 310
BIT. PAVEMENT (SECTION)
P.C. CONCRETE (SECTION)
AGGREGATE BASE
SELECT MATERIAL
SUBGRADE SEAL

TREES AND SHRUBS
TRAFFIC SIGN
ADVERTISING SIGN — Large — Small
GUARD RAIL — New — Existing
BARRIER POST - HAZARD MARKER
STANDARD BARBED WIRE FENCE — Gate
WOOD FENCE
FABRIC WIRE FENCE
CATTLE GUARD (1) (2) — New — Existing
CHANNEL OR DITCH
DYKE OR LEVEE
BANK PROTECTION
RETAINING WALL
PIPE CULVERTS (1) (2) — New — Existing
REINF. CONC. BOX CULV. (1) (2) — New — Existing
C.M.P. DOWNDRAIN — 1-Way — 2-Way
CONCRETE SPILLWAY — 1-Way — 2-Way
DROP INLET OR CATCH BASIN
MANHOLE — New — Exist. — To be Adjusted
FIRE HYDRANT — New — Exist.
VALVE (WATER OR GAS) — W — G
METER BOX
TELEPHONE BOOTH
STREET LIGHT — On. Ext. Arm
DOWN GUY AND ANCHOR
TELEPHONE OR TELEGRAPH LINE
POWER LINE OR JOINT LINE
WATER LINE — W — 2"
GAS LINE — G — 3"
IRRIGATION LINE — IRR — 12"
STORM DRAIN — SD — 30"
SANITARY SEWER — S — 8"

B.P.R. REGION	STATE	PROJ. NO.	SHEET NO.	TOTAL SHEETS	AS BUILT
7	ARIZ.				
7 1/2" / 10	5" / 10	1 5" / 10	5" / 10	5" / 10	1"

1" / 4 — 3" / 10

RAILROAD CROSSING SIGNS — Advance Warning — X Buck — Flashing Light
RAILROAD TRACK
WELL OR PUMP HOUSE
SURVEY MONUMENT (1) (2) — New — Exist.
R/W MARKER (1) (2) — New — Exist.
MILE POST — New — Exist.
ANGLE POINT AND ANGLE (1) (2) —

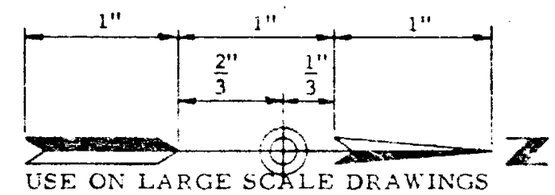

USE ON LARGE SCALE DRAWINGS

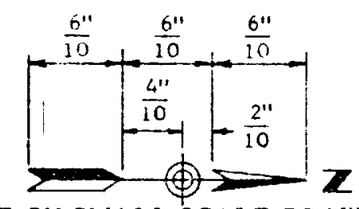

USE ON SMALL SCALE DRAWINGS

(1) New: No. 1 Rapidograph line width.
(2) Existing: No. 00 Rapidograph line width. (Back of plan sheet)

ARIZONA HIGHWAY DEPARTMENT
PLANS DIVISION

Rev 12-5-68

PLANS SYMBOLS

Drawn	R.A.F. 8/67	Drawing No.
Traced		C-1.01
Checked	J.F.O. JFO 5-68	
Approved Engr. Plans	[illegible] 5-68	

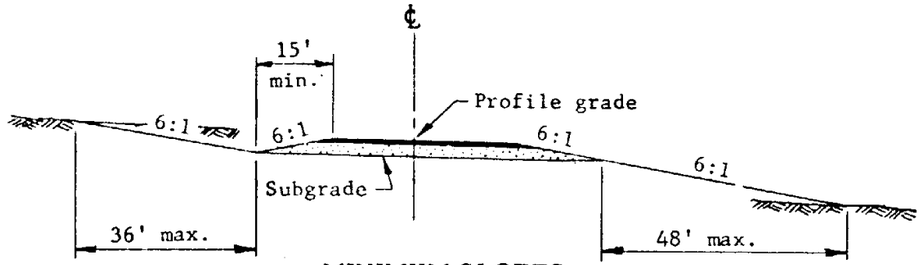

MINIMUM SLOPES

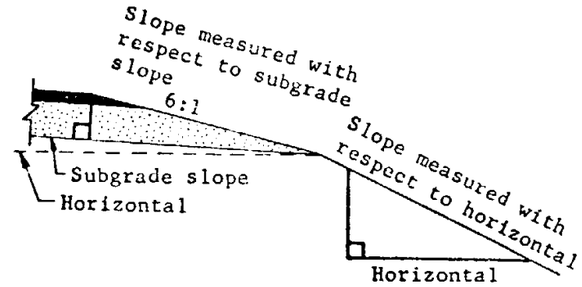

DETAIL ILLUSTRATING
SUBGRADE & EMBANKMENT
SLOPE CONTROL

GENERAL NOTES

The desirable maximum embankment slope rate shall be 4:1 within interchange and grade separation areas.

See Plans for details of; roadway width, cut ditch, type and thickness of roadway surfacing, and superelevation.

Standard cut and embankment slopes as shown on this sheet may be superseded by special slopes where shown on Plans.

For cuts up to 6' use 5' semi-tangents for slope rounding. For each additional foot of cut add 1' to semi-tangent to 11' maximum.

Should median slopes intersect see design supplement sheet.

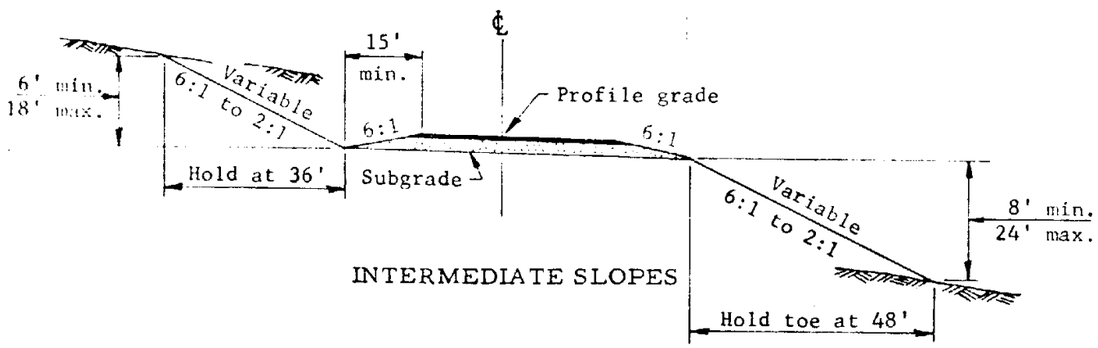

INTERMEDIATE SLOPES

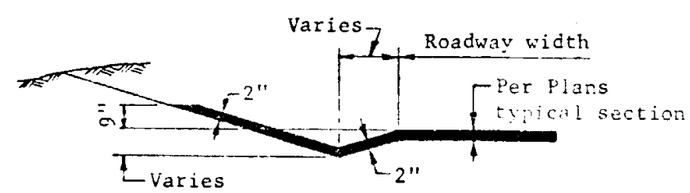

PAVED GUTTER IN CUTS

NOTE: Std. slope rounding not shown. See General Notes.

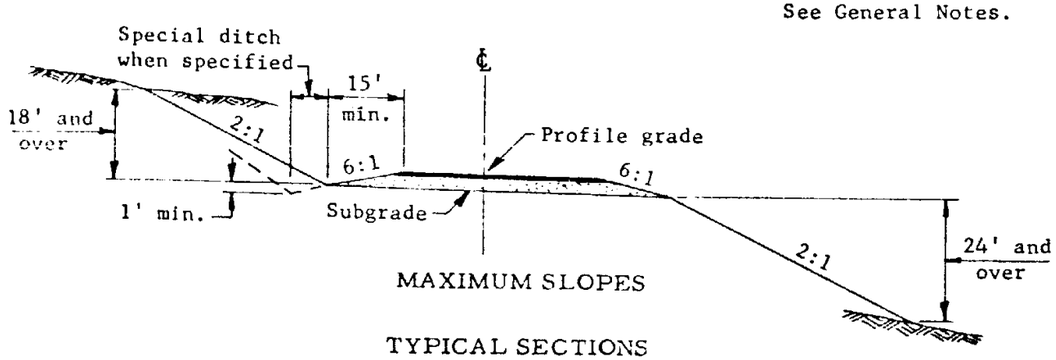

MAXIMUM SLOPES

TYPICAL SECTIONS

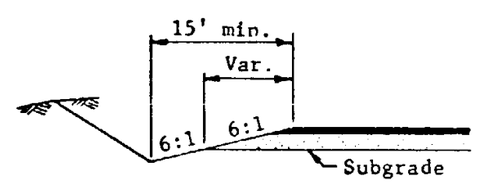

MINIMUM DITCH CONDITION

ARIZONA HIGHWAY DEPARTMENT PLANS DIVISION		Rev
SLOPES INTERSTATE AND CLASS A-A ROADWAYS		
Drawn	R.A.F. 11-67	Drawing No.
Traced	R.A.F. 11-67	C-2.01
Checked	J.P.O.	
Approved Engr. Plans	G Weidenaar 5-68	

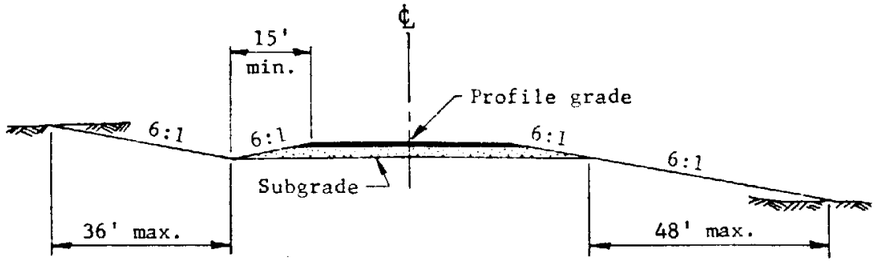

MINIMUM SLOPES

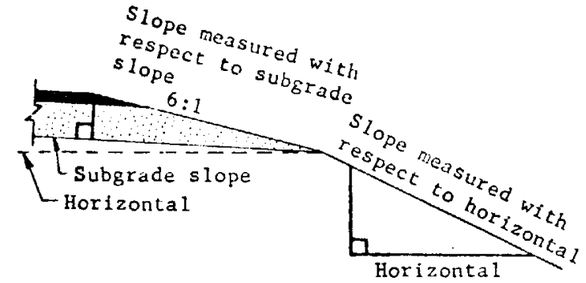

DETAIL ILLUSTRATING
SUBGRADE & EMBANKMENT
SLOPE CONTROL

NOTE: Std. slope rounding not shown. See General Notes.

GENERAL NOTES

See Plans for details of; roadway width, cut ditch, type and thickness of roadway surfacing, superelevation, and curve widening.

Standard cut and embankment slopes as shown on this sheet may be superseded by special slopes where shown on Plans.

For cuts up to 6' use 5' semi-tangents for slope rounding. For each additional foot of cut add 1' to semi-tangent to 11' maximum.

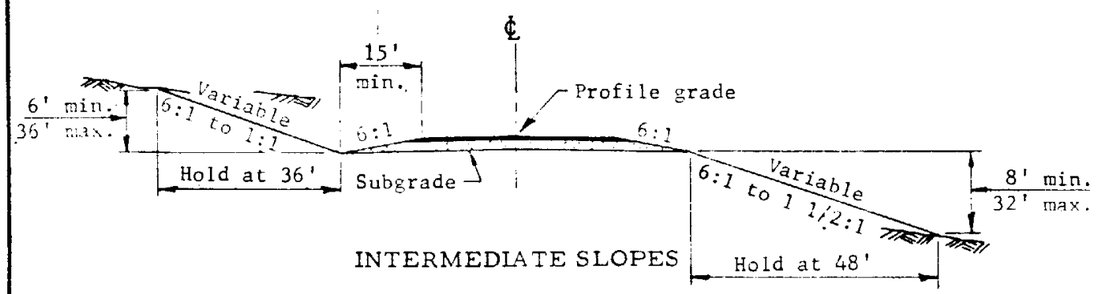

INTERMEDIATE SLOPES

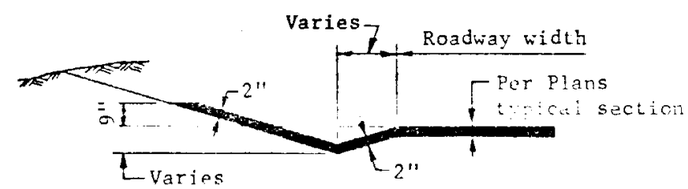

PAVED GUTTER IN CUTS

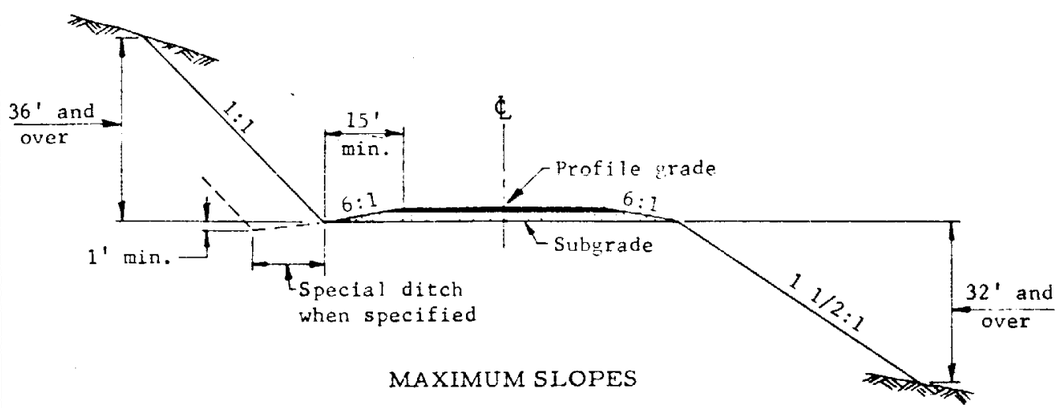

MAXIMUM SLOPES

TYPICAL SECTIONS

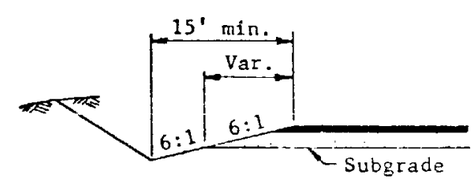

MINIMUM DITCH CONDITION

ARIZONA HIGHWAY DEPARTMENT PLANS DIVISION			Rev
SLOPES CLASS A & B ROADWAYS			
Drawn	S.L.T. 11-67	Drawing No.	
Traced	R.A.F. 11-67	C-2.02	
Checked	J.P.O.		
Approved Engr. Plans	[illegible] 5-68		

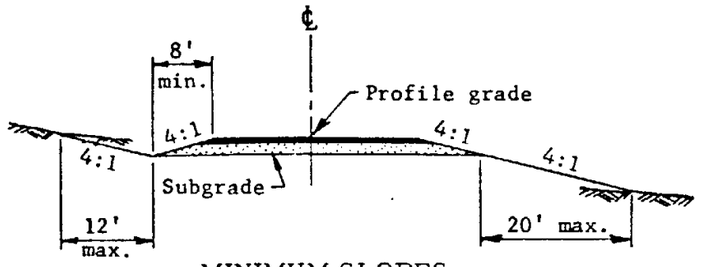

MINIMUM SLOPES

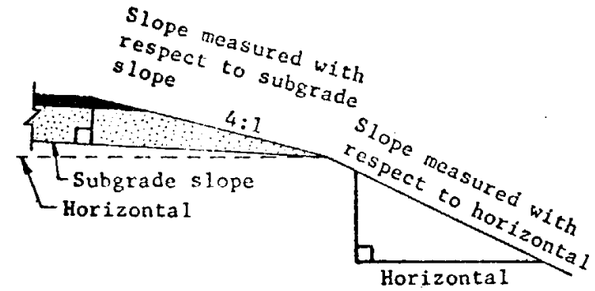

DETAIL ILLUSTRATING
SUBGRADE & EMBANKMENT
SLOPE CONTROL

NOTE: Std. slope rounding not shown. See General Notes.

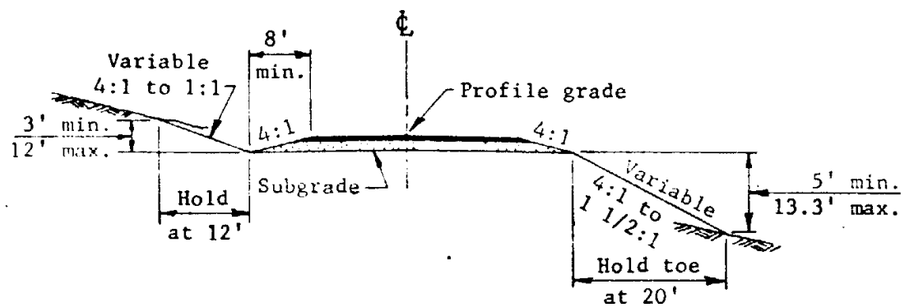

INTERMEDIATE SLOPES

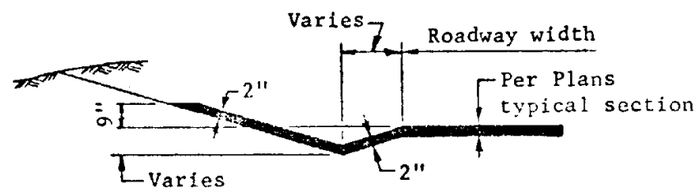

PAVED GUTTER IN CUTS

GENERAL NOTES

See Plans for details of; roadway width, cut ditch, type and thickness of roadway surfacing, superelevation, and curve widening.

Standard cut and embankment slopes as shown on this sheet may be superseded by special slopes where shown on Plans.

For cuts up to 6' use 5' semi-tangents for slope rounding. For each additional foot of cut add 1' to semi-tangent to 11' maximum.

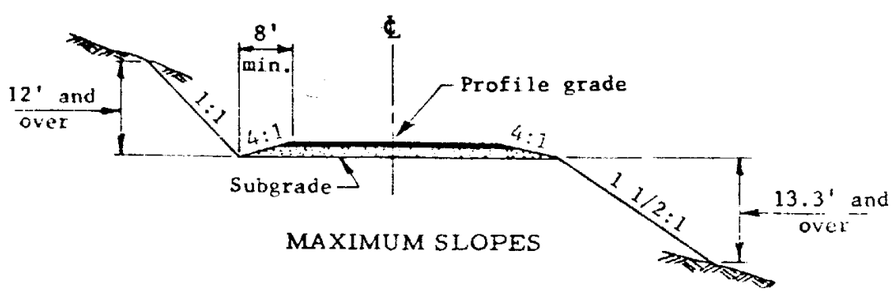

MAXIMUM SLOPES

TYPICAL SECTIONS

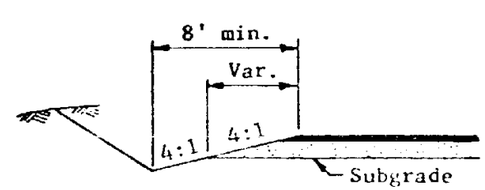

MINIMUM DITCH CONDITION

ARIZONA HIGHWAY DEPARTMENT
PLANS DIVISION

SLOPES
CLASS C & D ROADWAYS

Drawn	S.L.T. 11-67	Drawing No.
Traced	R.A.F. 11-67	C-2.03
Checked	J.P.O.	
Approved Engr. Plans		

Rev

CUMULATIVE PERCENT OF CROWN "C" FOR EACH FOOT RIGHT OR LEFT OF ℄

W = FULL WIDTH OF ROADWAY - FEET

X →	2'	4'	6'	8'	10'	12'	14'	16'	18'	20'	22'	24'	26'	28'	30'	32'	34'	36'	38'	40'	42'	44'
90	0.20	0.79	1.78	3.16	4.94	7.11	9.68	12.64	16.00	19.75	23.90	28.44	33.38	38.72	44.44	50.57	57.09	64.00	71.31	79.01	87.11	95.61
88	0.21	0.83	1.86	3.31	5.17	7.44	10.12	13.22	16.74	20.66	25.00	29.75	34.92	40.50	46.49	52.89	59.71	66.94	74.59	82.64	91.12	C
86	0.22	0.87	1.95	3.46	5.41	7.79	10.60	13.85	17.52	21.63	26.18	31.15	36.56	42.40	48.67	55.38	62.52	70.09	78.10	86.53	95.40	
84	0.23	0.91	2.04	3.63	5.67	8.16	11.11	14.51	18.37	22.68	27.44	32.65	38.32	44.44	51.02	58.05	65.53	73.47	81.86	90.70	C	
82	0.24	0.95	2.14	3.81	5.95	8.57	11.66	15.23	19.27	23.80	28.79	34.27	40.21	46.64	53.54	60.92	68.77	77.10	85.90	95.18		
80	0.25	1.00	2.25	4.00	6.25	9.00	12.25	16.00	20.25	25.00	30.25	36.00	42.25	49.00	56.25	64.00	72.25	81.00	90.25	C		
78	0.26	1.05	2.37	4.20	6.57	9.47	12.89	16.83	21.30	26.30	31.82	37.87	44.44	51.54	59.17	67.32	76.00	85.21	94.94			
76	0.28	1.11	2.49	4.43	6.93	9.97	13.57	17.73	22.44	27.70	33.52	39.89	46.81	54.29	62.33	70.91	80.06	89.75	C			
74	0.29	1.17	2.63	4.67	7.30	10.52	14.32	18.70	23.67	29.22	35.35	42.07	49.38	57.27	65.74	74.80	84.44	94.67				
72	0.31	1.23	2.78	4.94	7.72	11.11	15.12	19.75	25.00	30.86	37.35	44.44	52.16	60.49	69.44	79.01	89.20	C				
70	0.33	1.31	2.94	5.22	8.16	11.76	16.00	20.90	26.45	32.65	39.51	47.02	55.18	64.00	73.47	83.59	94.37					
68	0.35	1.38	3.11	5.54	8.65	12.46	16.95	22.15	28.03	34.60	41.87	49.83	58.48	67.82	77.85	88.58	C					
66	0.37	1.47	3.30	5.87	9.18	13.21	17.99	23.49	29.73	36.71	44.41	52.86	62.03	71.94	82.59	93.97						
64	0.39	1.56	3.52	6.25	9.77	14.06	19.14	25.00	31.64	39.06	47.27	56.25	66.02	76.56	87.89	C						
62	0.42	1.66	3.75	6.66	10.41	14.98	20.40	26.64	33.71	41.62	50.36	59.94	70.34	81.58	93.65							
60	0.44	1.78	4.00	7.11	11.11	16.00	21.78	28.44	36.00	44.44	53.78	64.00	75.11	87.11	C							
58	0.48	1.90	4.28	7.61	11.89	17.12	23.31	30.44	38.52	47.56	57.55	68.49	80.38	93.22								
56	0.51	2.04	4.59	8.16	12.76	18.37	25.00	32.65	41.33	51.02	61.73	73.47	86.22	C								
54	0.55	2.19	4.94	8.78	13.72	19.75	26.89	35.12	44.44	54.87	66.39	79.01	92.73									
52	0.59	2.37	5.33	9.47	14.79	21.30	28.99	37.87	47.93	59.17	71.60	85.21	C									
50	0.64	2.56	5.76	10.24	16.00	23.04	31.36	40.96	51.84	64.00	77.44	92.16										
48	0.69	2.78	6.25	11.11	17.36	25.00	34.03	44.44	56.25	69.44	84.03	C										
46	0.76	3.02	6.81	12.10	18.90	27.22	37.05	48.39	61.25	75.61	91.49											
44	0.83	3.31	7.44	13.22	20.66	29.75	40.50	52.89	66.94	82.64	C											
42	0.91	3.63	8.16	14.51	22.68	32.65	44.44	58.05	73.47	90.70												
40	1.00	4.00	9.00	16.00	25.00	36.00	49.00	64.00	81.00	C												
38	1.11	4.43	9.97	17.73	27.70	39.89	54.29	70.91	89.75													
36	1.23	4.94	11.11	19.75	30.86	44.44	60.49	79.01	C													
34	1.38	5.50	12.46	22.15	34.60	49.83	67.82	88.58														
32	1.56	6.25	14.06	25.00	39.06	56.25	76.56	C														
30	1.78	7.11	16.00	28.44	44.44	64.00	87.11															
28	2.04	8.16	18.37	32.65	51.02	73.47	C															
26	2.37	9.47	21.30	37.87	59.17	85.21																
24	2.78	11.11	25.00	44.44	69.44	C																
22	3.31	13.22	29.75	52.89	82.64																	
20	4.00	16.00	36.00	64.00	C																	
18	4.94	19.75	44.44	79.01																		
16	6.25	25.00	56.25	C																		
14	8.16	32.65	73.47																			
12	11.11	44.44	C																			

FORMULA

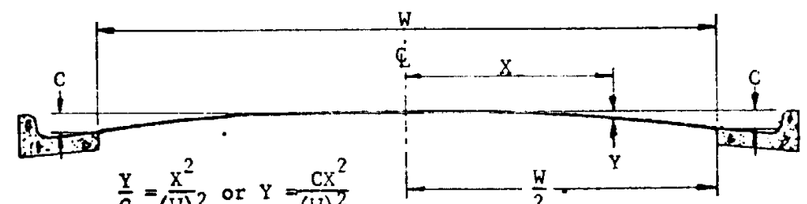

$$\frac{Y}{C} = \frac{X^2}{\left(\frac{W}{2}\right)^2} \text{ or } Y = \frac{CX^2}{\left(\frac{W}{2}\right)^2}$$

USE OF TABLE

Example:

Assume W = 40 ft. and C = 0.45 ft.
Find Y for X = 8 ft.

Table shows Y = 16.00% of C,
or 0.16 X 0.45' = 0.072 ft.

ARIZONA HIGHWAY DEPARTMENT
PLANS DIVISION

Rev. 12-5-68

PARABOLIC CROWN FORMULA AND TABLE

Drawn	L.McD. 6-41	Drawing No.
Traced	S.L.T. 7-67	C-2.04
Checked	J.P.O. JPO 5-68	
Approved Engr. Plans	F. Heidecker 5-68	

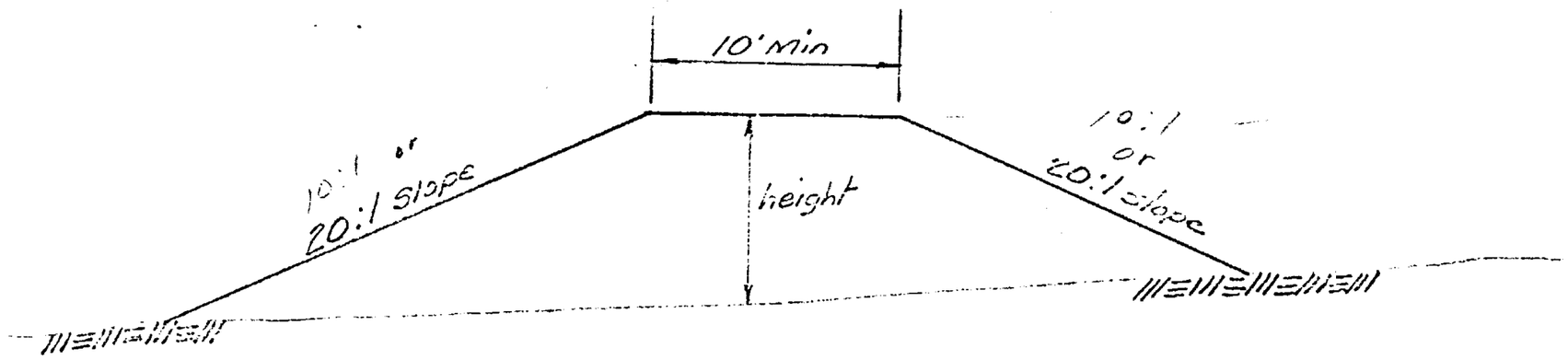

Std C-3.01 Type M modified

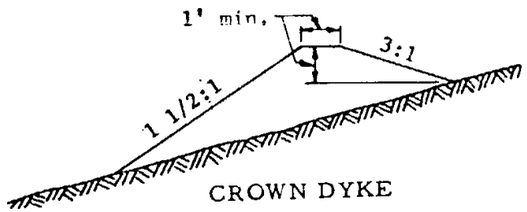

CROWN DYKE

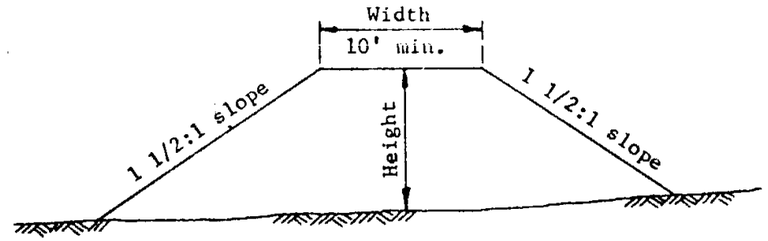

TYPE A DYKE

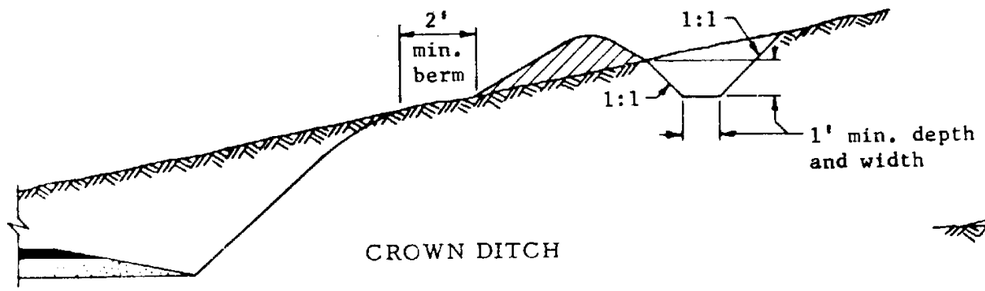

CROWN DITCH

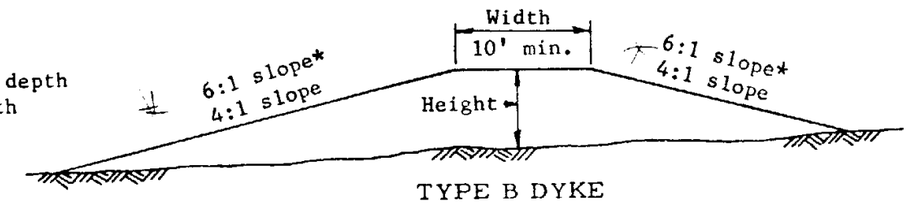

TYPE B DYKE

* TYPE M DYKE

GENERAL NOTES

Bituminous or soil cement protection shall be applied to dyke surfaces as called for on Plans.

Dimensions of ditches and dykes, as shown on Plans, are width, depth or height and length.

Grader Ditches and crown ditches or dykes shall be constructed with a minimum grade to prevent excessive erosion. Ditch outlets should be provided where possible.

Ditch sections shown may be varied by the Engineer.

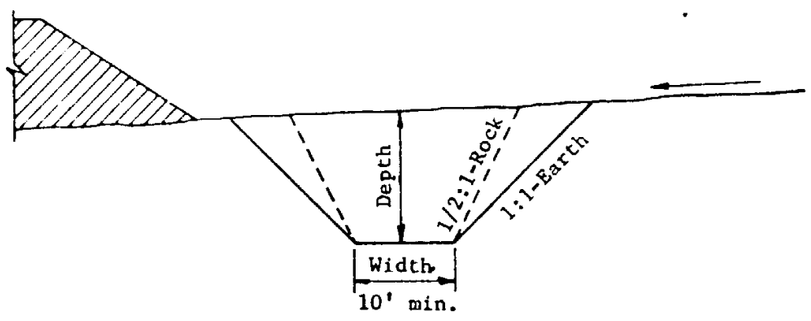

CHANNEL

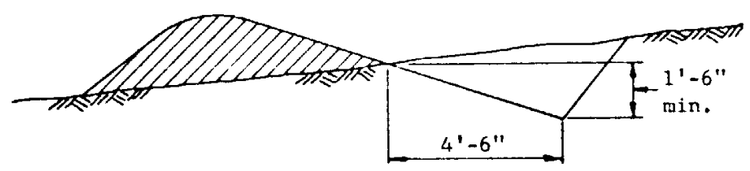

GRADER DITCH

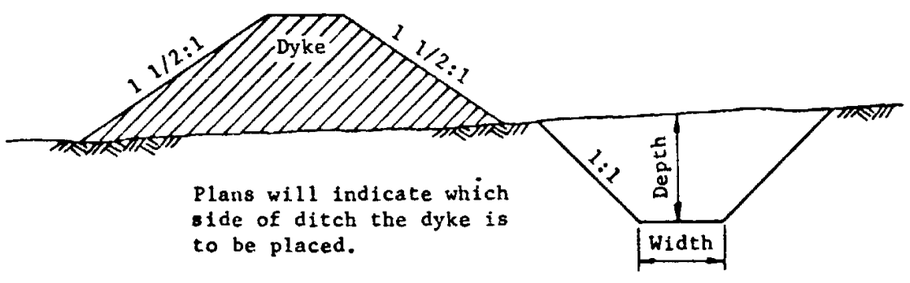

Plans will indicate which side of ditch the dyke is to be placed.

DITCH AND DYKE

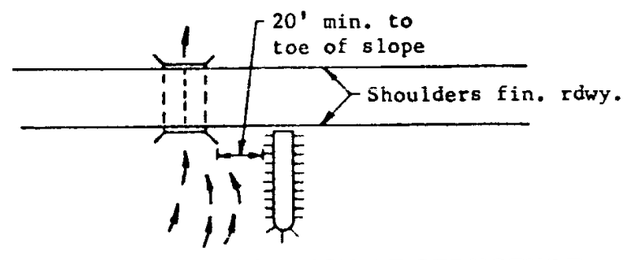

TYPICAL DYKE INSTALLATION AT STRUCTURE

Place dykes at structures to create a water cushion.

ARIZONA HIGHWAY DEPARTMENT PLANS DIVISION			Rev
DITCHES AND DYKES			
Drawn	G.H. 12-45	Drawing No.	
Traced	R.A.F. 10-67	C-3.01	
Checked	J.P.O. JPO 5-68		
Approved Engr. Plans	G Heidecker 5-68		

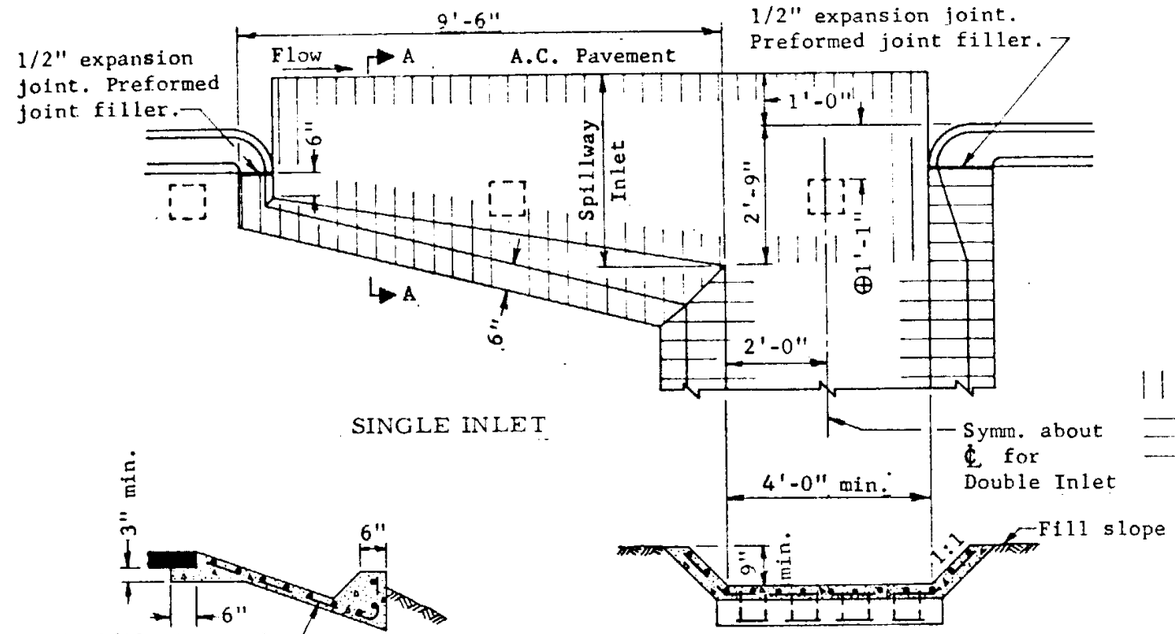

SINGLE INLET

SPILLWAY SECTION

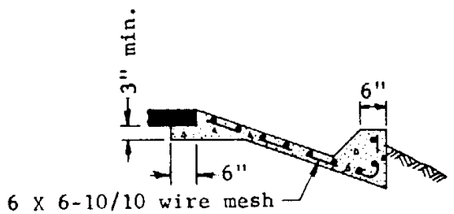

SECTION A-A

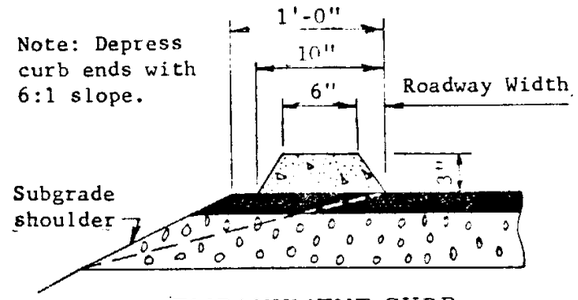

EMBANKMENT CURB

GENERAL NOTES

Concrete for the spillway inlet, spillway and outlet shall be Class A.

Concrete for the embankment curb shall be as specified in the Specifications.

Indicates inlet

Indicates spillway

⊕ Preferred guard rail post location.

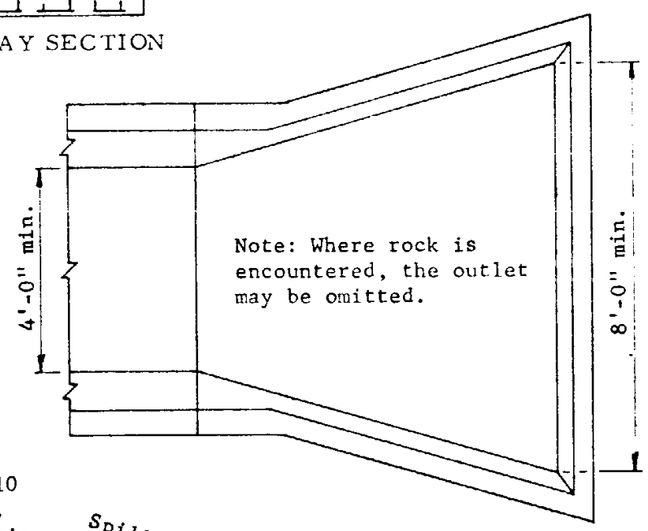

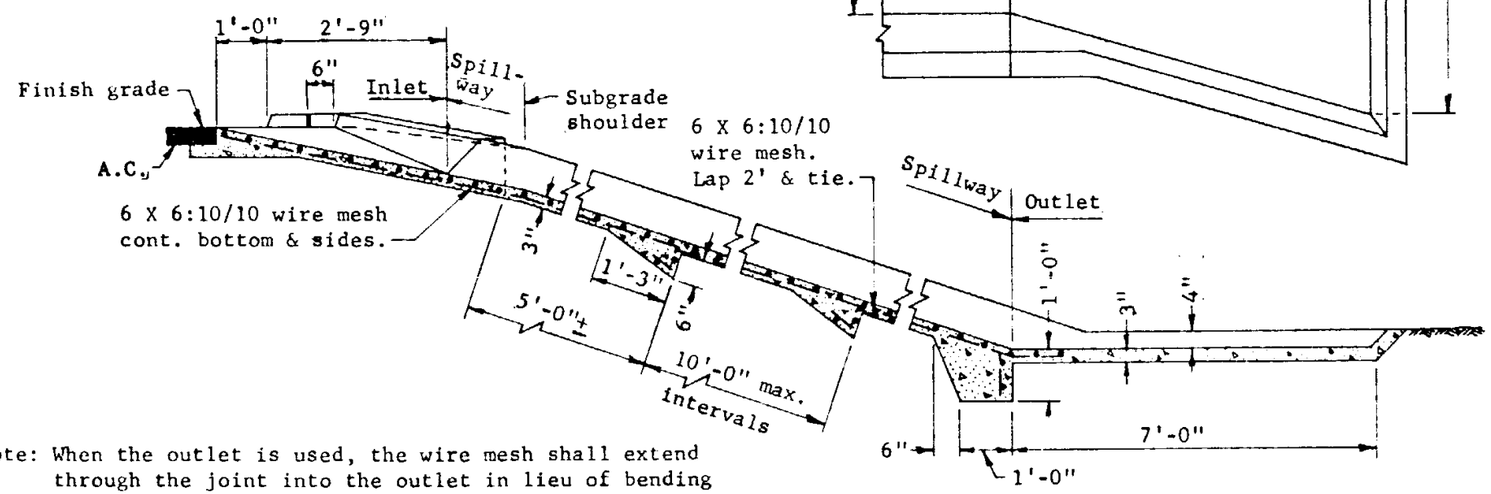

Note: When the outlet is used, the wire mesh shall extend through the joint into the outlet in lieu of bending into the key.

SECTION ON SPILLWAY ℄
DOUBLE INLET

ARIZONA HIGHWAY DEPARTMENT PLANS DIVISION			Rev 9-27-68 11-14-68 5-14-69 2-25-70
CONCRETE SPILLWAY, INLET & OUTLET. EMBANKMENT CURB			
Drawn	L.O.M. 1-64	Drawing No.	
Traced	R.A.F. 9-68		
Checked	J.P.O. JPO 12-68	C-4.01	
Approved Engr. Plans	Weidecker 1-69		

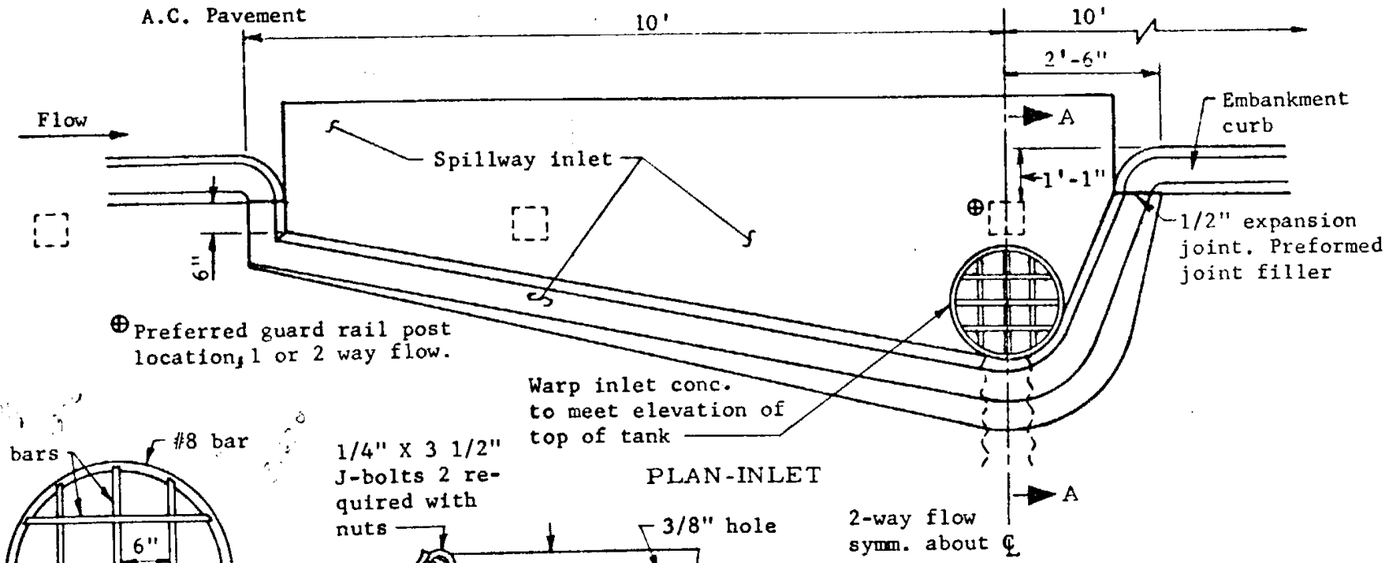

PLAN-INLET

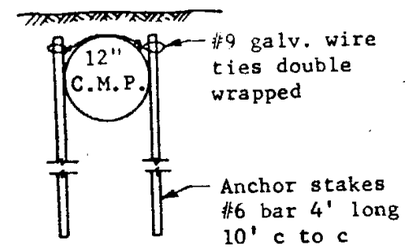

DETAIL ANCHOR

GENERAL NOTES

Use 12", 16 ga. corrugated pipe.

24" X 4'-0" C.M.P. tank, 6" 6" X 1'-0" C.M.P. stub and angle supports shall be shop fabricated and galvanized in accordance with AASHO M 36.

Round all exposed concrete corners.

See Detail for rock installation.

Coupling bands for pipe 21" dia. and smaller may be 18 ga.

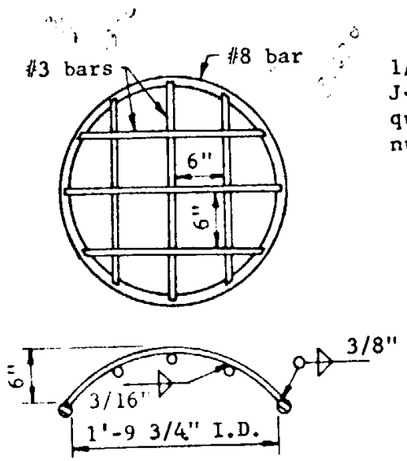

DETAIL-TRASH RACK
TO BE GALVANIZED

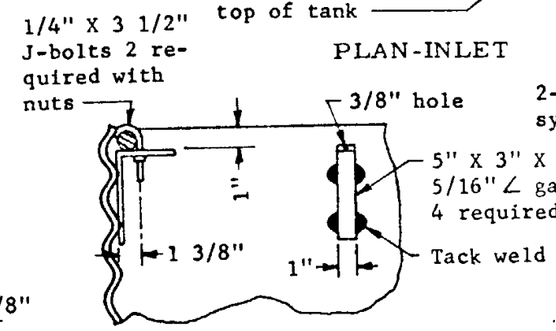

DETAIL-ANGLE SUPPORTS FOR TRASH RACK

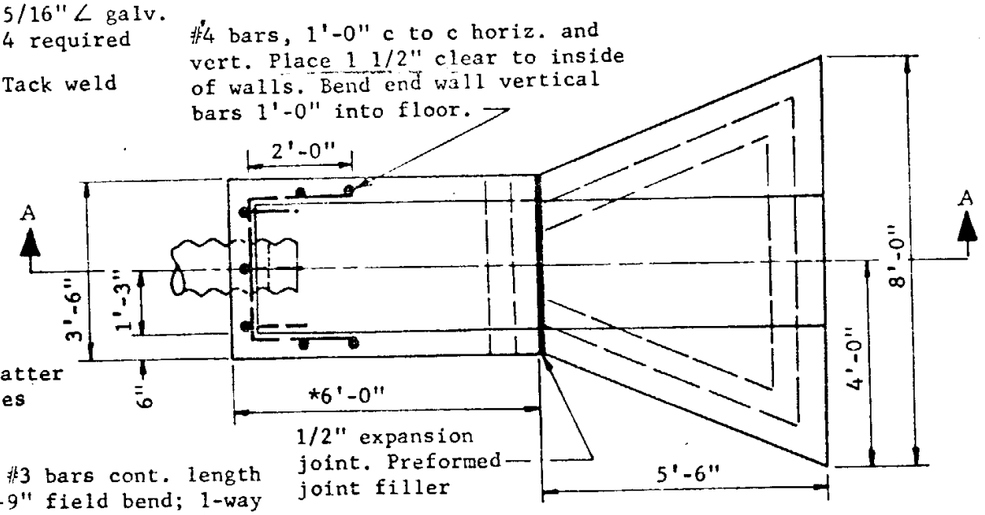

OUTLET-HEADWALL AND CONCRETE APRON

*Varies with fill slope and pipe cover.

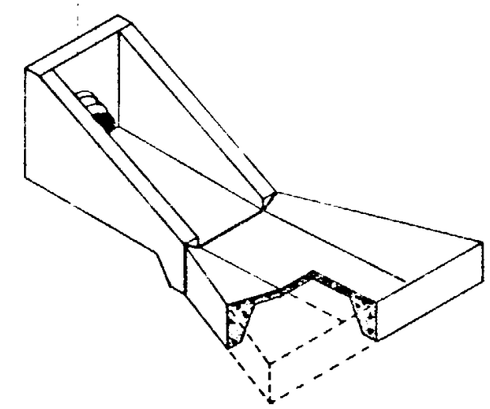

OUTLET DETAIL

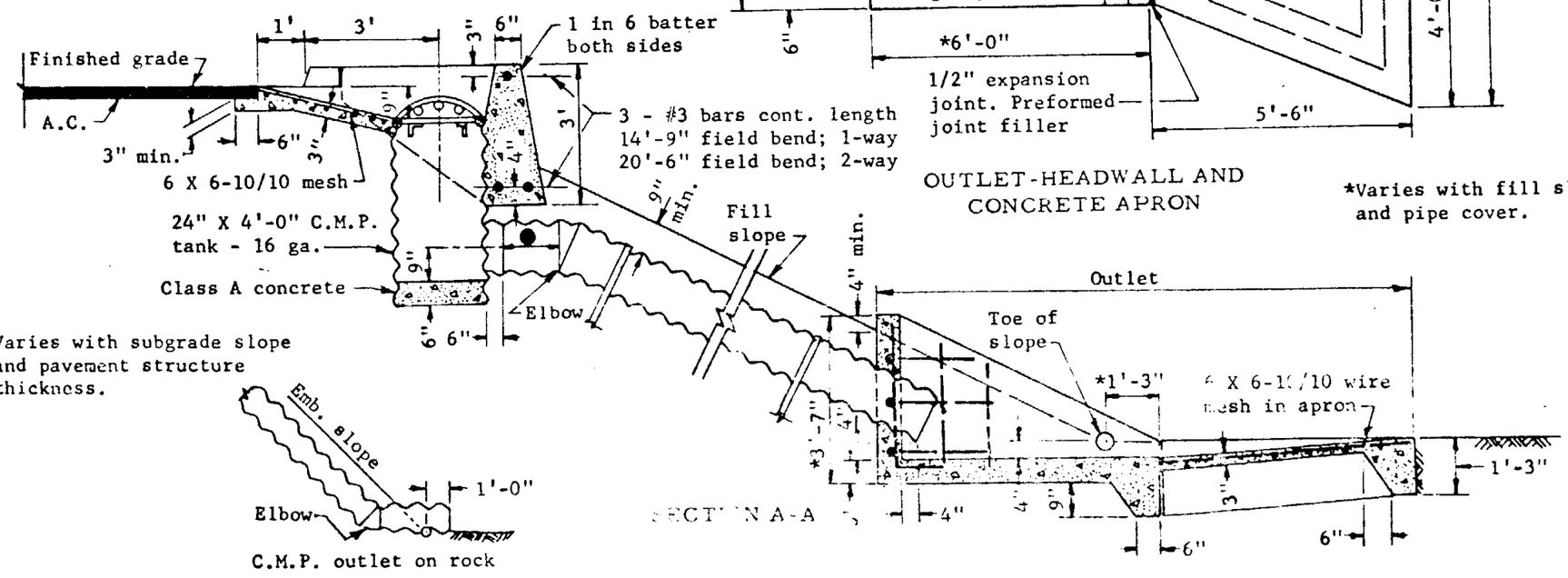

SECTION A-A

ARIZONA HIGHWAY DEPARTMENT PLANS DIVISION			Rev 9-24-68 11-14-68
SPILLWAY INLET C.M.P. DOWNDRAIN OUTLET			
Drawn	L.O.M. & D.G.	Drawing No.	
Traced	S.L.T. & R.A.F.	C-4.02	
Checked	J.P.O. JPO 5-68		
Approved Engr. Plans	G. Weidecker 5-68		

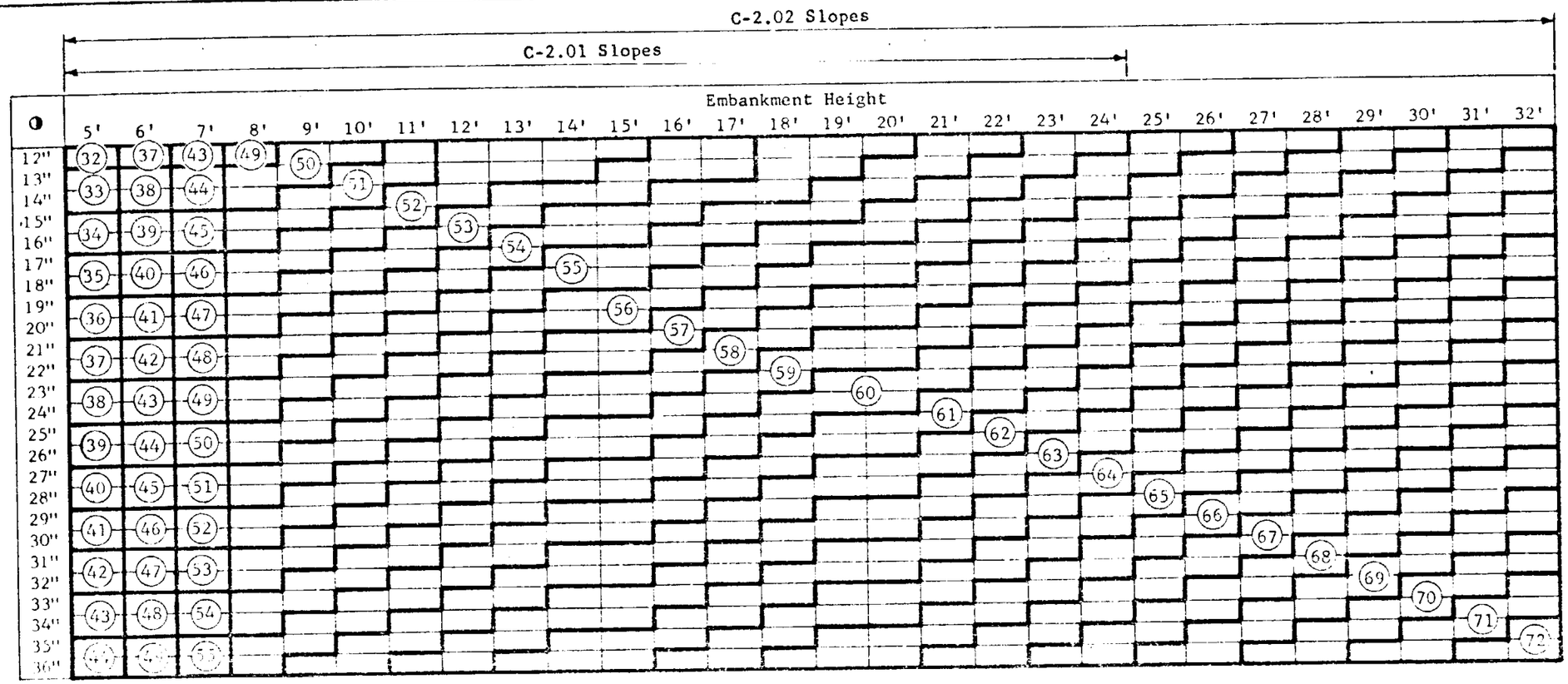

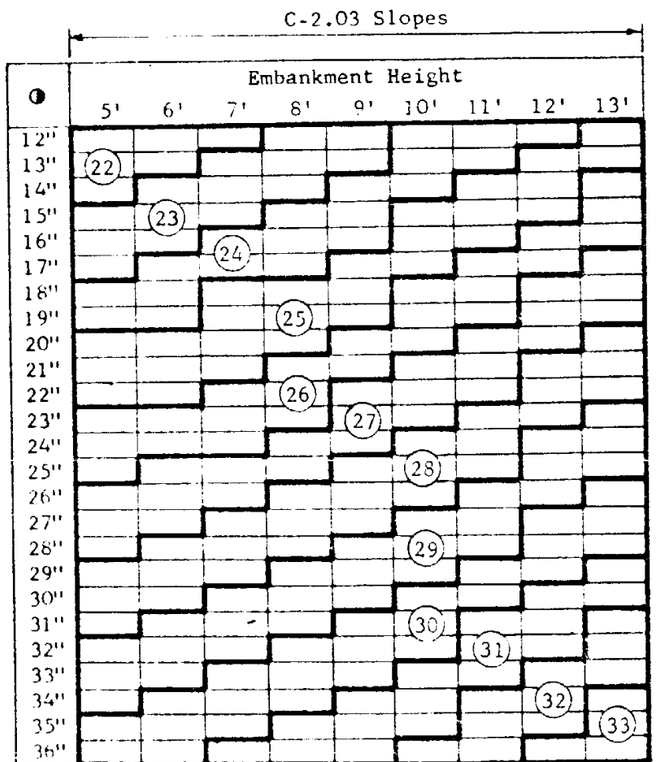

◑ Thickness of pavement structure

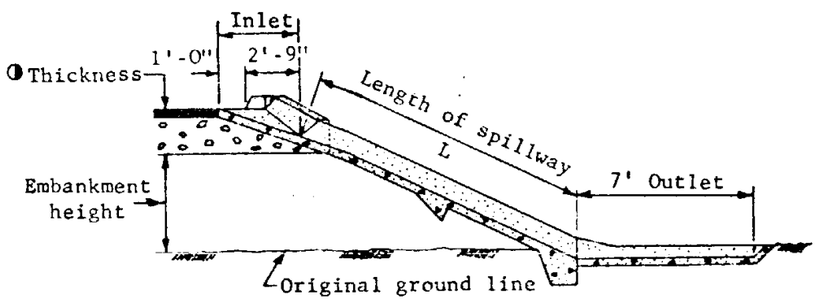

GENERAL NOTES

For C-2.01 slopes with emb. height over 24', L = L for 24' emb. height from table + 2.24(emb. height - 24).

For C-2.02 slopes with emb. height over 32', L = L for 32' emb. height from table + 1.8(emb. height - 32).

For C-2.03 slopes with emb. height over 13', L = L for 13' emb. height from table + 1.8(emb. height - 13).

ARIZONA HIGHWAY DEPARTMENT
PLANS DIVISION

CONCRETE SPILLWAY LENGTH TABLE

Drawn	D.G. 12-67	Drawing No.
Traced	D.G. 1-68	C-4.03
Checked	J.P.O. 5-68	
Approved Engr. Plans	5-68	

Rev

C-2.02 Slopes

C-2.01 Slopes

◑	Embankment Height 7'	8'	9'	10'	11'	12'	13'	14'	15'	16'	17'	18'	19'	20'	21'	22'	23'	24'	25'	26'	27'	28'	29'	30'	31'	32'
12"	32	38																								
13"			46																							
14"		40																								
15"	34				48																					
16"						50																				
17"																										
18"		42						52																		
19"	36																									
20"										54																
21"																										
22"		44										56														
23"	38																									
24"														58												
25"																										
26"		46														60										
27"	40																									
28"																		62								
29"																										
30"		48																		64						
31"	42																									
32"																						66				
33"																										
34"		50																						68		
35"	44																									70
36"																										

C-2.03 Slopes

◑	Embankment Height 5'	6'	7'	8'	9'	10'	11'	12'	13'
12"									
13"		16							
14"	14					20			
15"									
16"									
17"			18						
18"									
19"	16					22			
20"									
21"									
22"									
23"			20						
24"									
25"	18					24			
26"									
27"									
28"			22						
29"									
30"	20					26			
31"									
32"									
33"									
34"			24						
35"	22						28		
36"				26					30

◑ Thickness of pavement structure

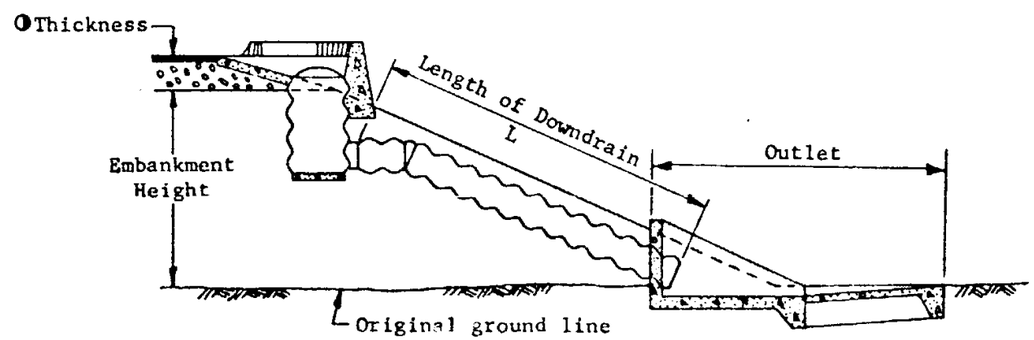

GENERAL NOTES

For C-2.01 slopes with emb. height over 24', L = L for 24' emb. height from table + 2.24(emb. height - 24).

For C-2.02 slopes with emb. height over 32', L = L for 32' emb. height from table + 1.8(emb. height - 32).

For C-2.03 slopes with emb. height over 13', L = L for 13' emb. height from table + 1.8(emb. height - 13).

ARIZONA HIGHWAY DEPARTMENT
PLANS DIVISION

Rev

C.M.P. DOWNDRAIN LENGTH TABLE

Drawn	J.W. & D.G. 2-67	Drawing No.
Traced	R.A.F. 12-67	C-4.04
Checked	J.P.O. JPO 5-68	
Approved Engr. Plans	G Heidecker 5-68	

NOTE: Radii shown for single curbs are typical throughout for respective type.
h=curb height as shown on Plans.

SINGLE CURB

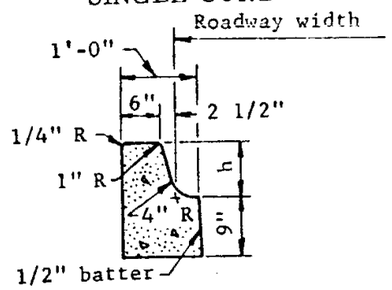

COMBINED CURB & GUTTER

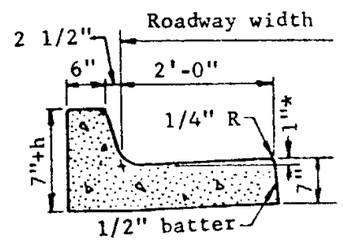

TYPE "A"
For 6" curb height or over

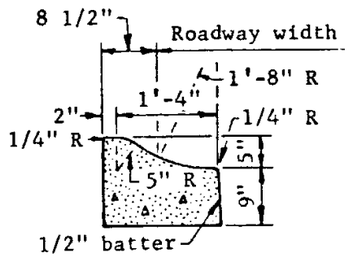

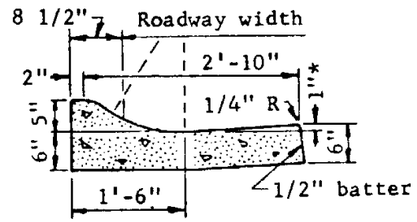

TYPE "E"

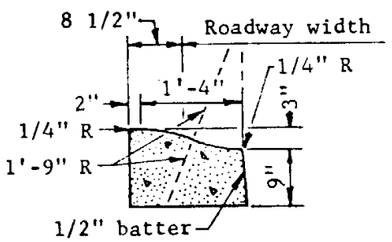

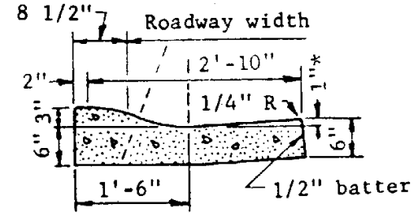

TYPE "F"

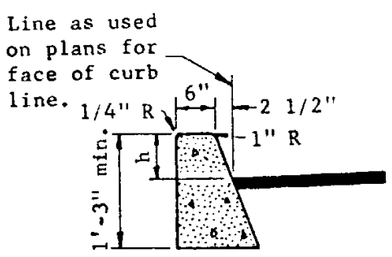

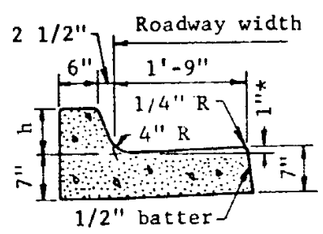

TYPE "G"

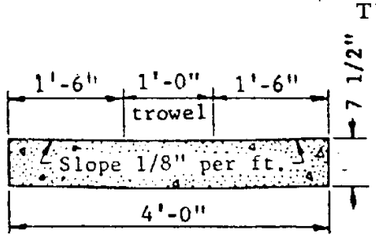

VALLEY GUTTER

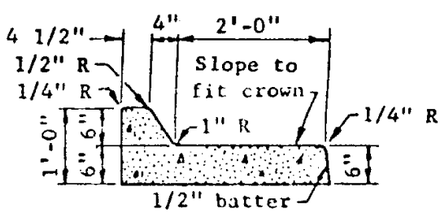

TYPE "H"

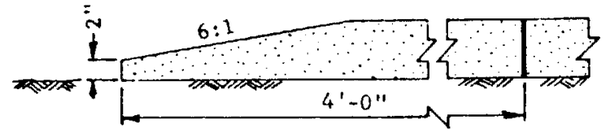

CURB TERMINAL SECTION

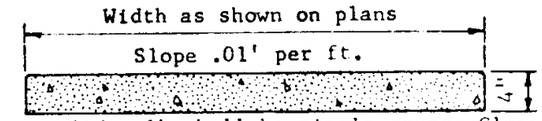

Sidewalk shall be single course Class A concrete, sweat finished and jointed with a 1/4" deep jointing tool at centers approximately equal to the width of the sidewalk.

Sidewalk shall be scored to a depth of 1" at intervals matching the joints in the adjacent curb.

Sidewalk shall be edged with a 1/4" radius edging tool.

CONCRETE SIDEWALK

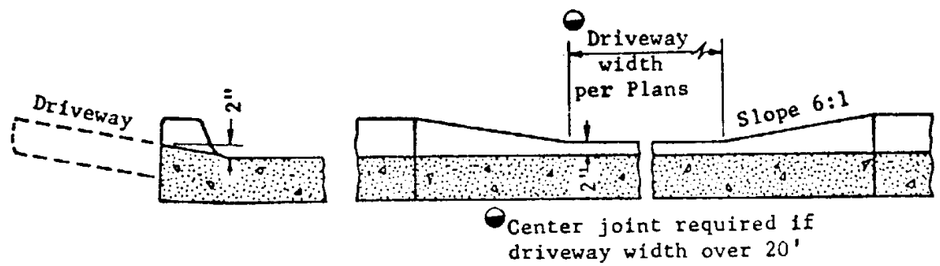

DEPRESSED CURB FOR DRIVEWAY ENTRANCE

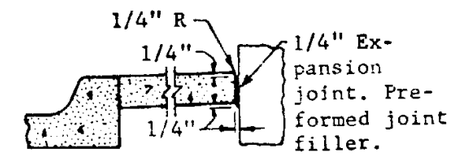

SIDEWALK EXPANSION JOINT

GENERAL NOTES

All curbs and gutters shall be single course, Class A concrete unless otherwise noted on plans.

All curbs shall be trowel finished.

All gutter flow lines shall be troweled to an accurate grade for a width of 9".

Curbs, or curb and gutter, shall have a 1/4" joint extending all the way through the concrete at locations matching the joints in adjacent P.C.C. pavement; at approximately 15' centers when adjacent pavement is bituminous and at tangent points in curb returns and at structures. The joints may be open or with redwood filler left in place.

* When curb and gutter is located with the roadway section sloping away from the curb, the gutter slope shall match the roadway slope.

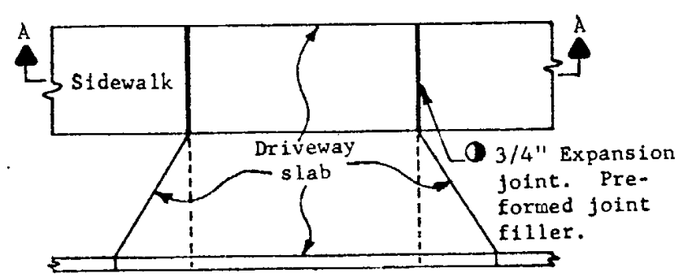

PLAN

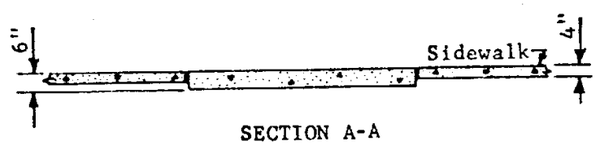

SECTION A-A

Joint is required between driveway slab and adjacent sidewalk.

SIDEWALK AT DRIVEWAY

ARIZONA HIGHWAY DEPARTMENT PLANS DIVISION			Rev
CURB, GUTTER, SIDEWALK & DRIVEWAY DETAILS			
Drawn	O.K.	3-1935	Drawing No.
Traced	R.A.F.	6-8-67	C-5.01
Checked	J.P.O.	5-68	
Approved Engr. Plans		5-68	

NOTE: Shaded area to be constructed & measured as valley gutter. Area(sq.ft.)/4' =lin. ft.

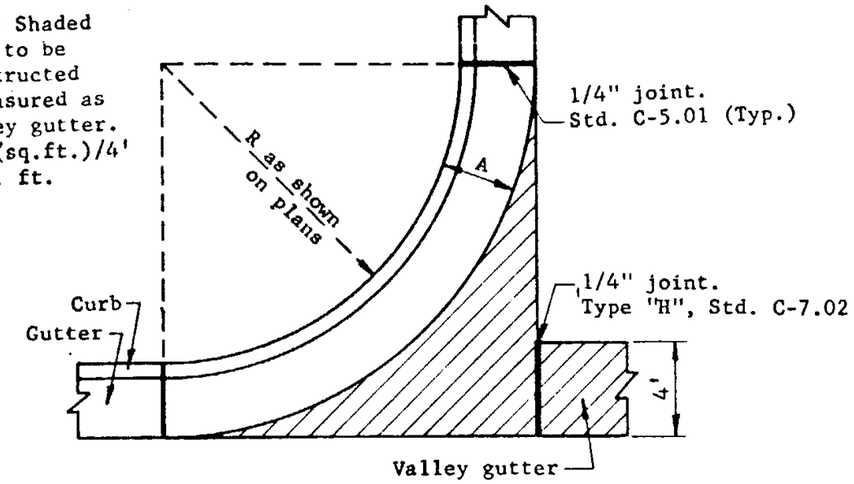

TYPICAL VALLEY GUTTER CONSTRUCTION AT STREET INTERSECTION OR ALLEY

A = Overall curb and gutter width.
d = Drop from point controlled by grade to outside edge of gutter.
F = Total crown from ℄ elev. to gutter grade.
a = Distance from ℄ to inside edge of gutter.
b = Distance from outside edge of gutter to point controlled by grade.
e = Drop from ℄ to inside edge of gutter.

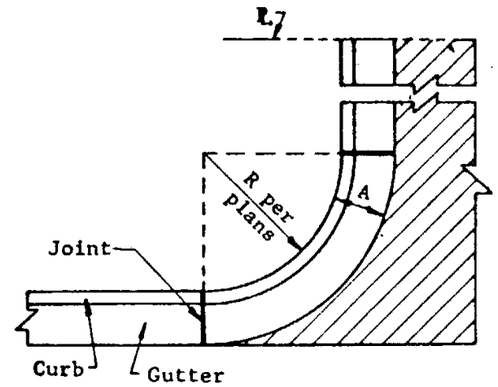

TYPICAL CONCRETE ALLEY OR DRIVEWAY CONSTRUCTION

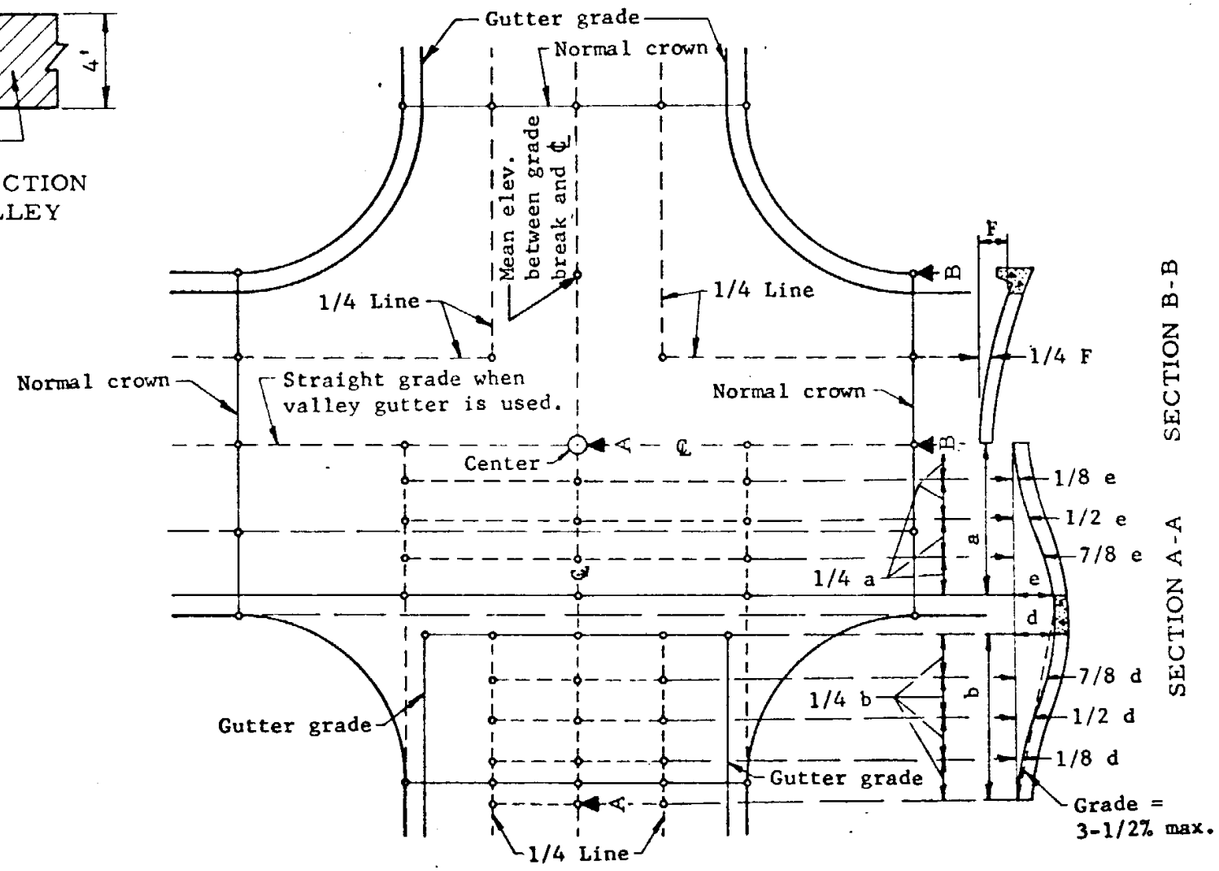

GENERAL NOTES

To determine the value of F, see roadway typical section.

For Curb and Gutter details, see Std. C-5.01.

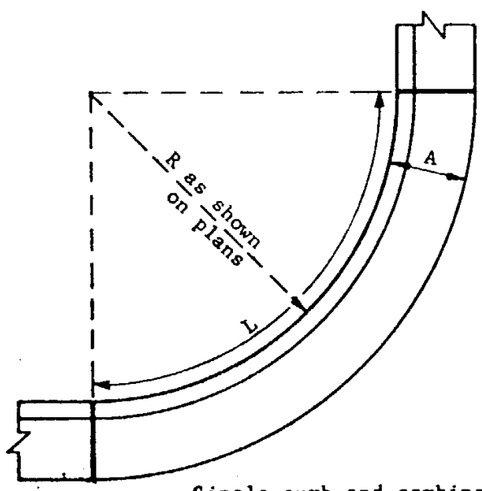

Single curb and combined curb and gutter will be measured along the back of the curb.

CURB & GUTTER MEASUREMENT ON CURVES

FORMULA FOR QUARTER POINTS

S = Sum of intersecting pavement widths. (Distance between gutter grade lines.)
D = Drop from center of intersection to center of return

where S =	0' to 90',	P = 0.17
" S =	91' to 100',	P = 0.18
" S =	101' to 110',	P = 0.19
" S =	111' to 136',	P = 0.20

PD = Drop from center of intersection to quarter point.

STREET INTERSECTION GRADES

ARIZONA HIGHWAY DEPARTMENT PLANS DIVISION		Rev
CURB & GUTTER MEASUREMENT & STREET INTERSECTION GRADES		
Drawn	O.K. & W.M.D.	Drawing No.
Traced	R.A.F. 9-16-66	C-5.02
Checked	J.P.O. JPO 5-68	
Approved Engr. Plans	G Heidecker 5-68	

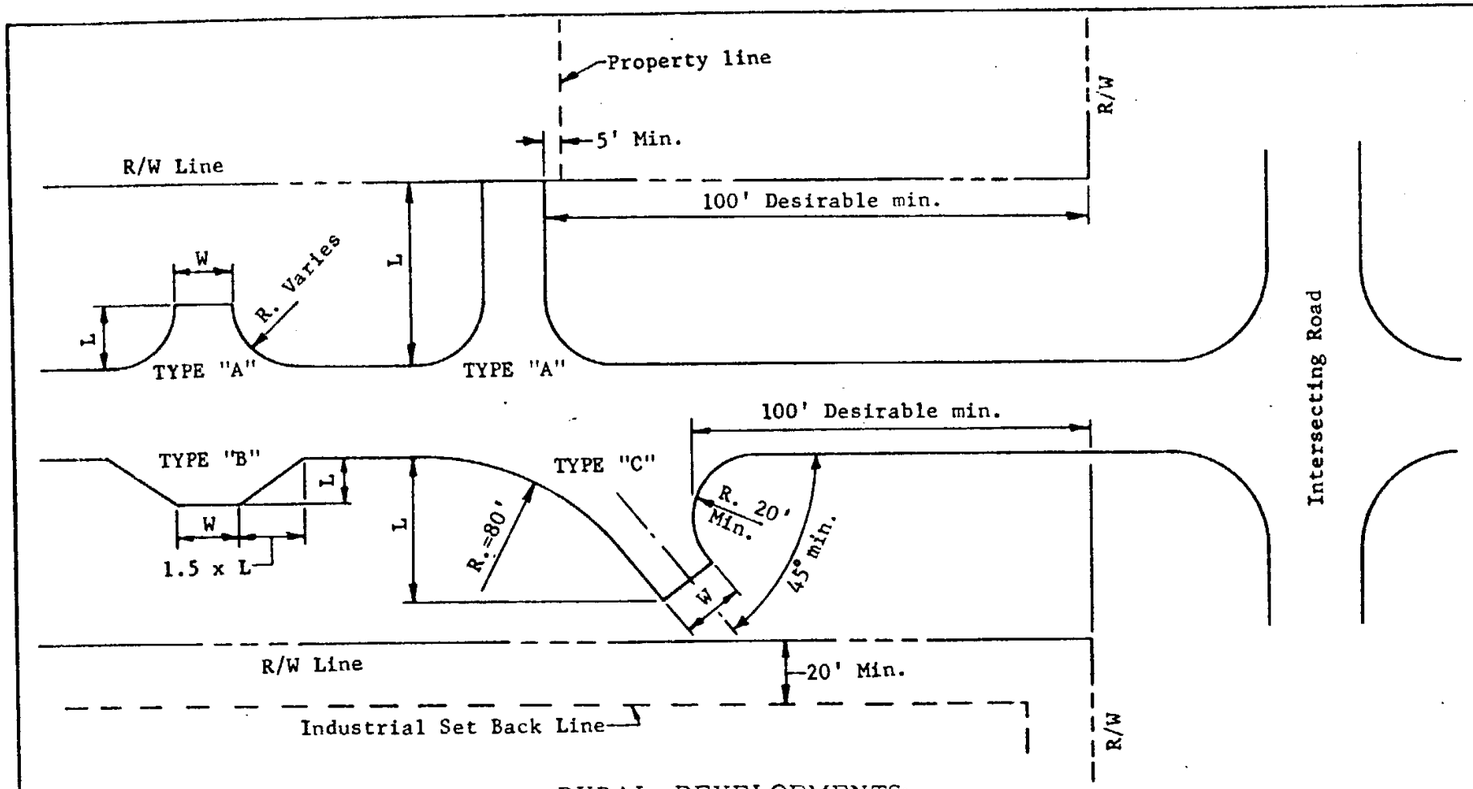

RURAL DEVELOPMENTS

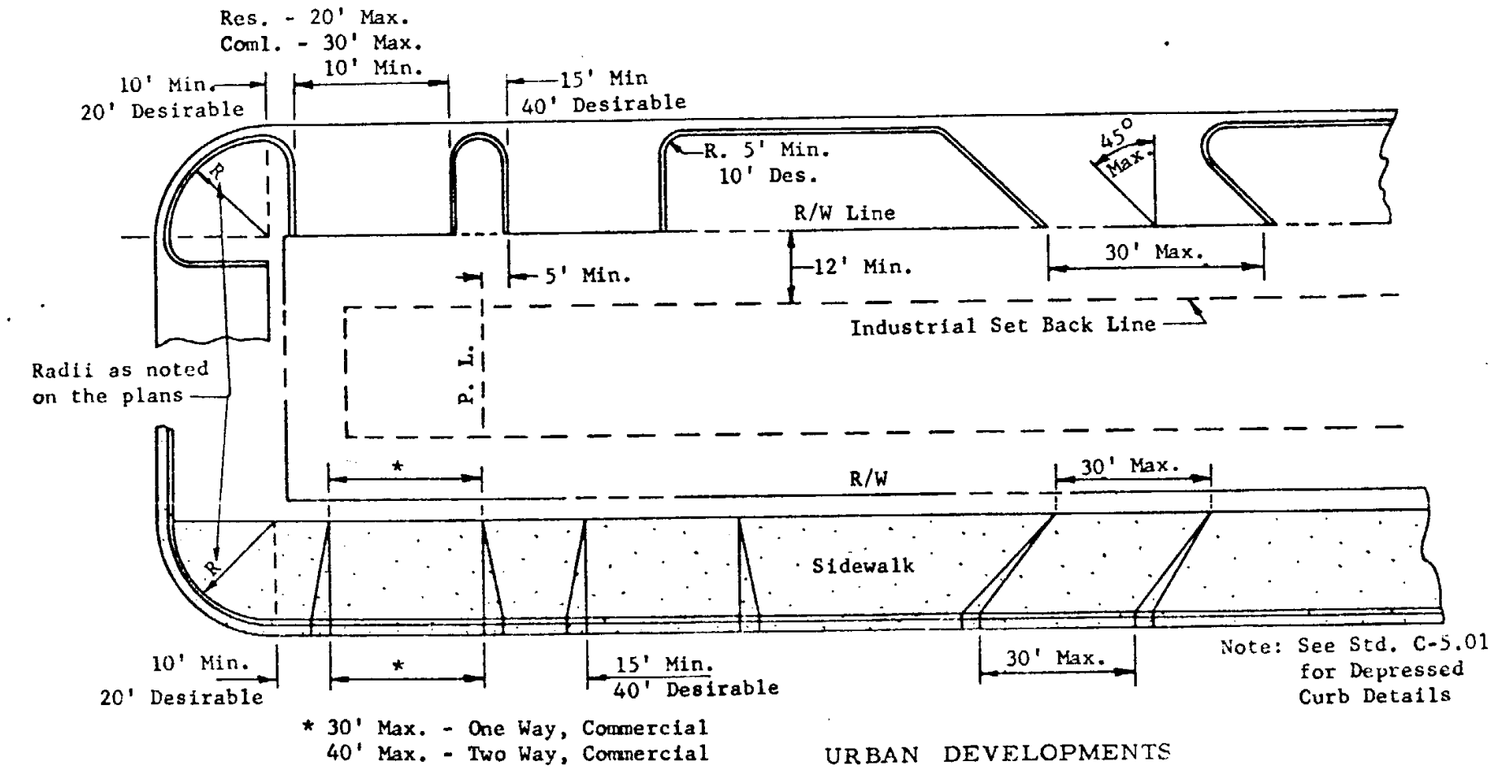

URBAN DEVELOPMENTS

GENERAL NOTES

Paved Turnouts: W=10' Minimum & 40' Maximum.
Plans notation will be W x L, Surface Material, Type & Standard.
Example: 16' x 30' A.C.T.O. Type "A" Standard C-6.01.

Base material shall be the same as that shown for main roadway, unless otherwise noted.

Excavation or Embankment for turnouts shall be included in quantities for main roadway.

Dimensions indicated as minimum shall be avoided wherever possible in favor of those indicated as desirable

Curbed driveways and depressed curbs shall be located as noted on Plans or as directed by the Engineer.

All radii shown are to back of curb.

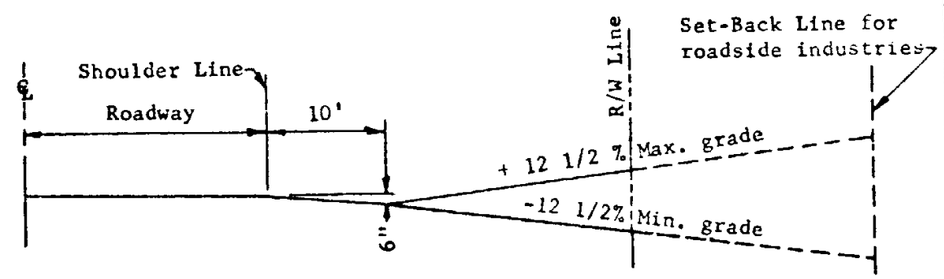

TYPICAL SECTION AT RURAL DRIVEWAY ENTRANCE
See Std. C-5.01 for Depressed Curb Details

ARIZONA HIGHWAY DEPARTMENT PLANS DIVISION		Rev
TURNOUT & DRIVEWAY LAYOUT		
Drawn	L. O. Moe 2-64	Drawing No.
Traced	R.A.F. 11-18-66	
Checked	J.P.O. 5-68	C-6.01
Approved Engr. Plans	H. Leidecker 5-68	

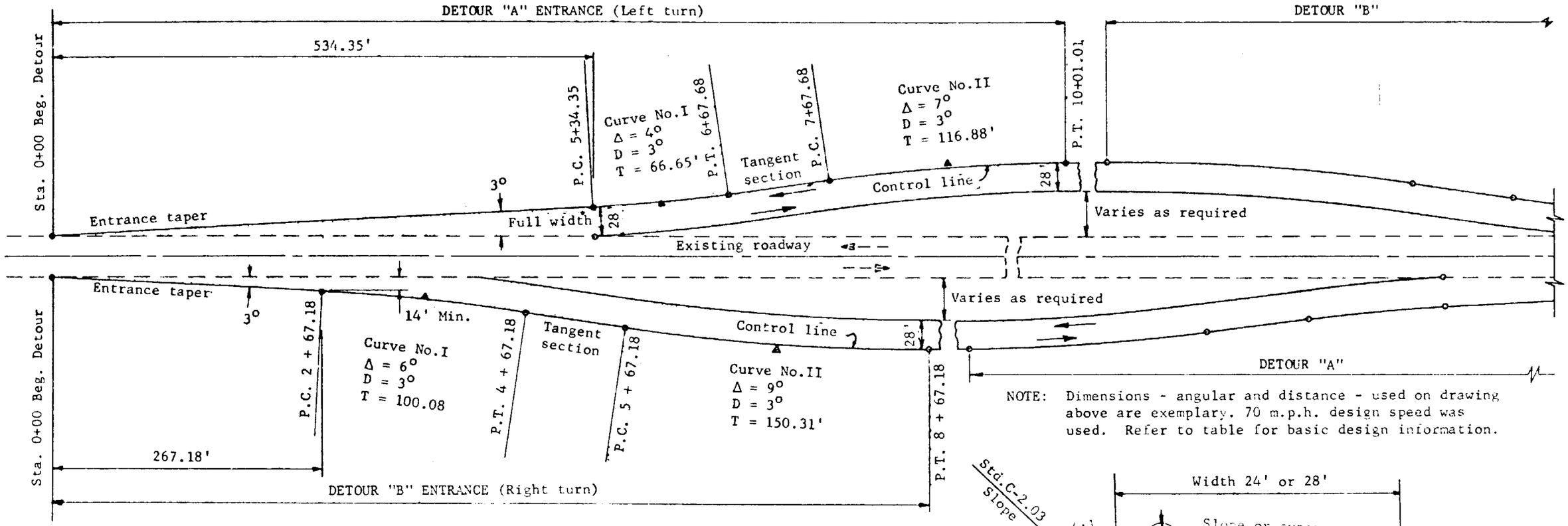

NOTE: Dimensions - angular and distance - used on drawing above are exemplary. 70 m.p.h. design speed was used. Refer to table for basic design information.

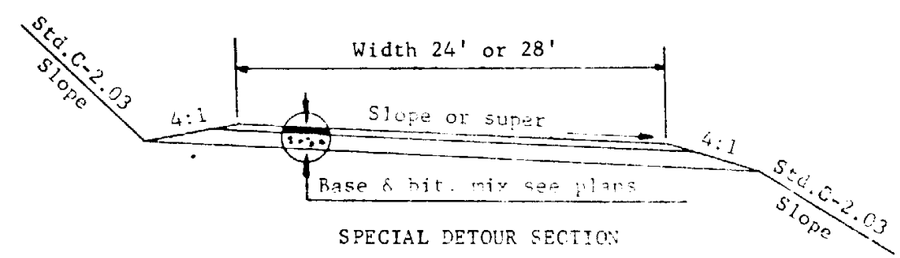

SPECIAL DETOUR SECTION

GENERAL NOTES

Detour "A" entrance shall be used where approaching vehicle must turn left. Detour "B" shall be used where approaching vehicle must turn right.

Detour from a horizontal curve: On the inside of the curve the detour take off shall be a curve, see table. On the outside a tangent take off shall be used. A vertical curve may be required to effect a smooth grade change.

The design speed shall be comparable between vertical and horizontal alignment.

The entrance design speed of a detour shall not be less than the normal posted speed of the existing roadway. The design speed for the remainder of the detour may be 20 m.p.h. less than the normal posted speed.

Any intermediate detour entrance may be designed on the basis of normal posted speed less 20 m.p.h. where visible construction activity has slowed traffic for the preceding 1/4 mile.

The minimum width of the detour shall be 28' for existing roadways 34' or wider and a minimum of 24' for existing roadways less than 34' in width.

The entrance taper for Detour "A" shall be extended until full detour width is attained. For Detour "B" the entrance taper shall be extended until a minimum of 14' is attained beyond the edge of existing roadway.

Any deviation from this standard must be approved by the Plans Engineer and Traffic Engineer and the Engineer shall submit the alignment and profile of the proposed change for their review.

Tangent Roadway		Curved Roadway		
Entrance Design Speed	Entr.Taper Def'l. Angle	Exist. Horiz. Curve	Detour "A" Take off Curve	Detour "B" Take off Curve
70	3°	1°	2°	2°30'
60	3°	2°	3°	3°30'
50	4°	3°	4°	5°
40	6°	4°	5°	6°
30	10°	5°	6°	7°
		6°	7°	8°
		7°	8°	9°
		8°	9°	10°

Entrance Design Speed	Max. Horizontal Curvature			
	Curve No. 1		Curve No. II	
	D	Superelev.	D	Superelev.
70	3°	.05'/ft.	3°	.03'/ft
60	3°	.02'/ft.	4°	.04'/ft.
50	4°	.015'/ft.	6°	.04'/ft.
40	6°	.015'/ft.	10°	.04'/ft.
30	10°	.015'/ft.	15°	.04'/ft.

ARIZONA HIGHWAY DEPARTMENT
PLANS DIVISION

Rev 12-66

DETOUR ENTRANCE DESIGN TABLE

Drawn	J.P.O. 12-64	Drawing No.
Traced	R.A.F. 12-66	
Checked	J.P.O. 12-5-68	C-6.02
Approved Engr. Plans	[illegible] 5-[illegible]	

S indicates sawed contraction joint
C indicates contraction control joint
CN indicates construction joint
LL indicates Longitudinal joint.
See Std. C-7.02

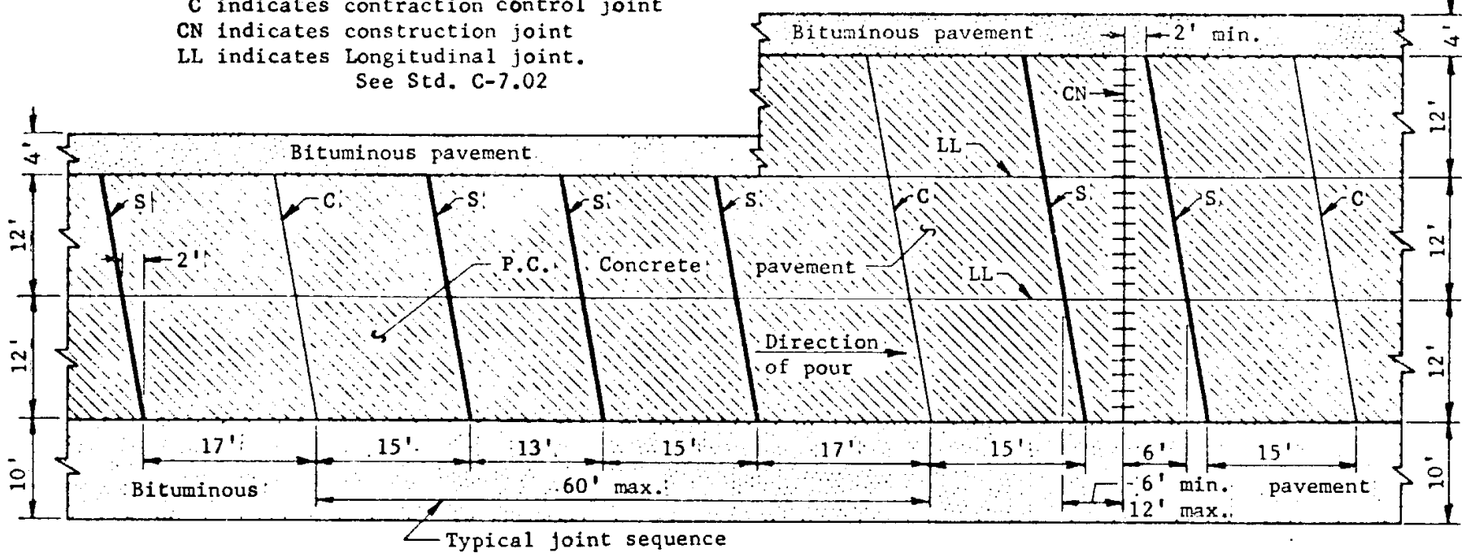

PLAN
See General Notes

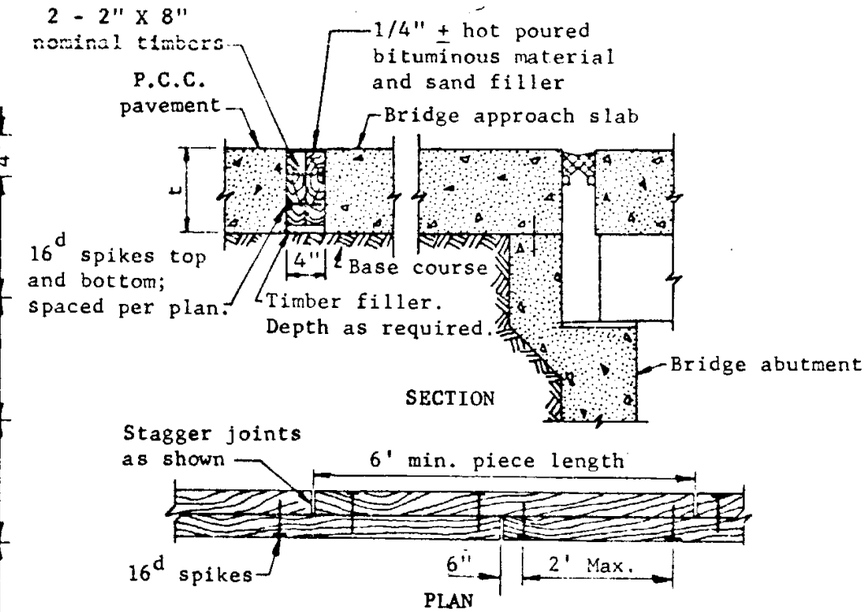

TRANSVERSE EXPANSION JOINT AT BRIDGE APPROACH SLAB

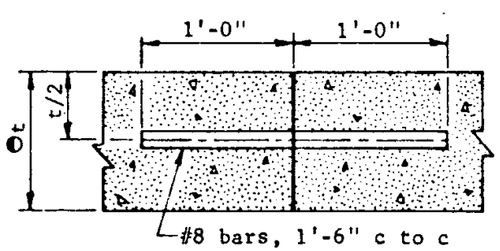

Indicates P.C.C. thickness

CONSTRUCTION JOINT
To be used at end of pour

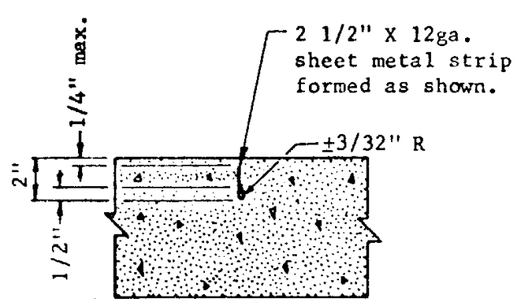

INSERT TYPE
CONTROL JOINT

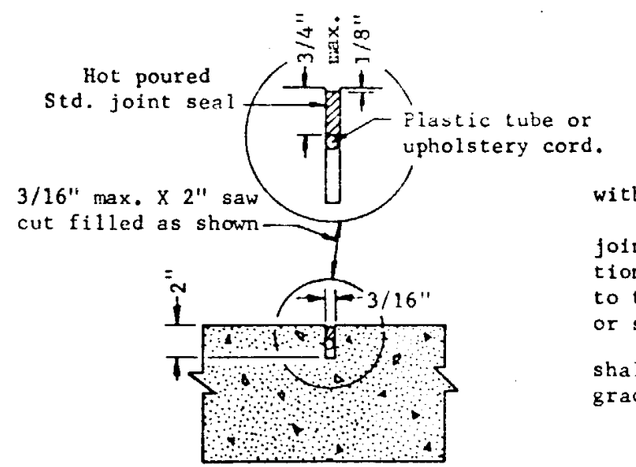

SAWED TYPE
CONTROL JOINT

GENERAL NOTES

All transverse joints shall be in line with joints in adjacent slabs.

At intersection of side roads or streets, joints shall be placed to give the intersection a symmetrical appearance while conforming to the cross section of the intersecting road or street.

Timbers used in transverse expansion joint shall be rough redwood and conform to commercial grade.

ARIZONA HIGHWAY DEPARTMENT PLANS DIVISION			Rev
PORTLAND CEMENT CONCRETE PAVEMENT TRANSVERSE JOINTS			
Drawn	L.O.M.	Drawing No.	
Traced	R.A.F. 12-66	C-7.01	
Checked	J.P.O. JPO 5-68		
Approved Engr. Plans	G Weidner 5-68		

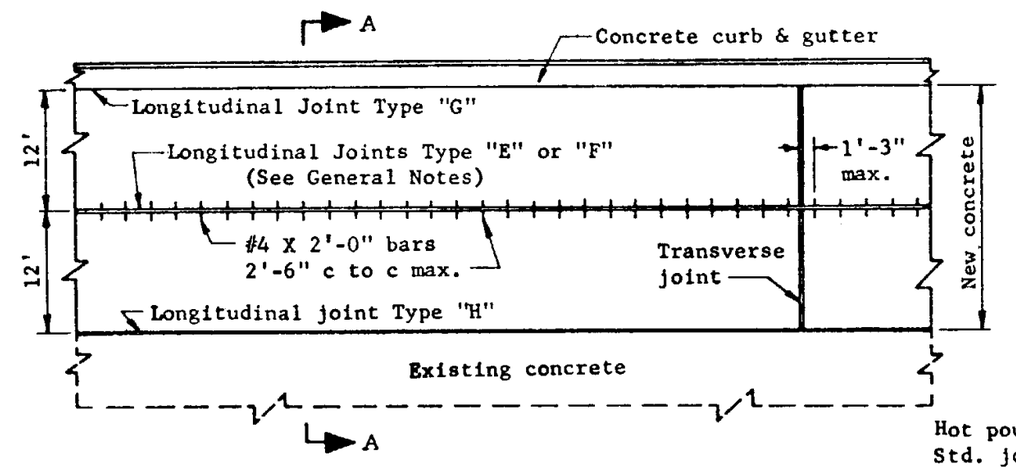

PLAN

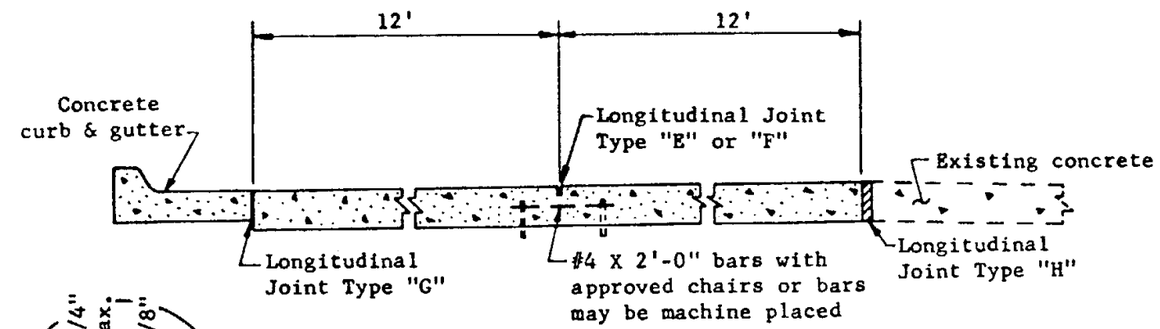

SECTION A-A

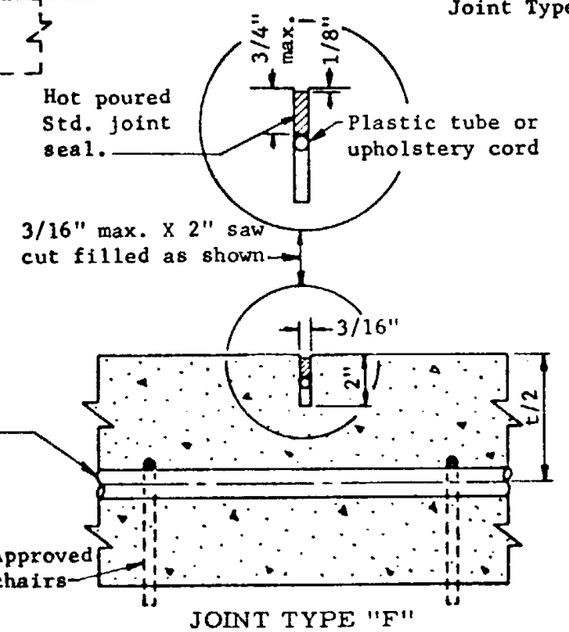

JOINT TYPE "F"

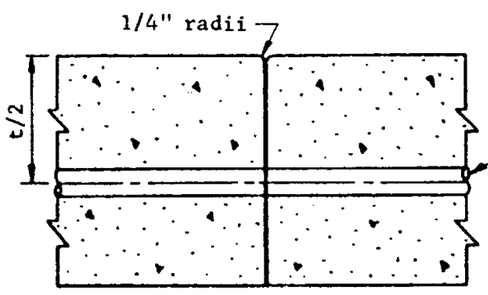

JOINT TYPE "E"

Note:
"t" indicates
pavement thickness

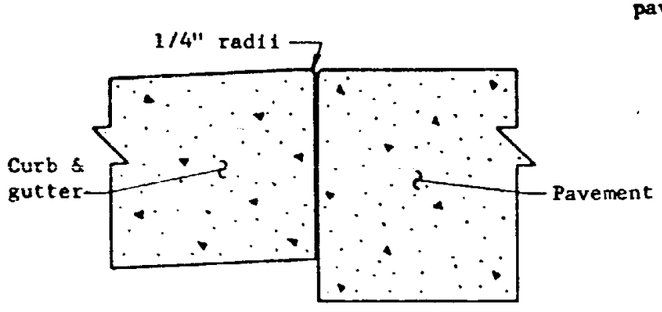

JOINT TYPE "G"

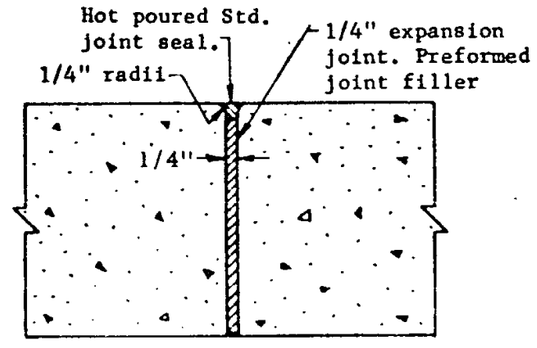

JOINT TYPE "H"

GENERAL NOTES

All bars used in joints shall be deformed. They shall be held securely in place, parallel to the subgrade and perpendicular to roadway centerline.

All formed longitudinal joints shall be finished with an edging tool not less than 1'-0" wide and 1'-6" long.

In slip form type pavement construction, Longitudinal Joint Type "F" shall be used. In fixed form type construction either Longitudinal Joint Type "E or "F" may be used.

LONGITUDINAL JOINT DETAILS

ARIZONA HIGHWAY DEPARTMENT PLANS DIVISION		Rev.
PORTLAND CEMENT CONCRETE PAVEMENT LONGITUDINAL JOINTS		
Drawn	O.K.	Drawing No.
Traced	R.A.F. 12-66	
Checked	J.P.O. JPO 5-68	C-7.02
Approved Engr. Plans	H. Weinheder 5-68	

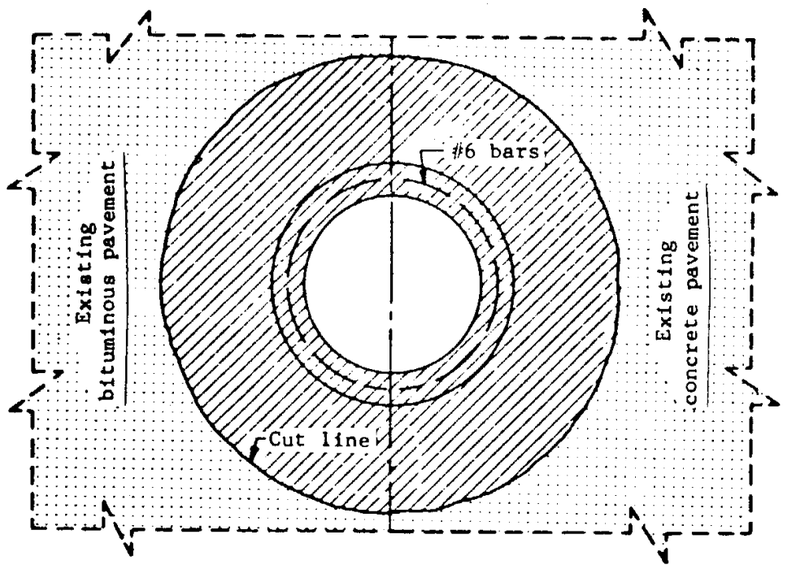

PLAN

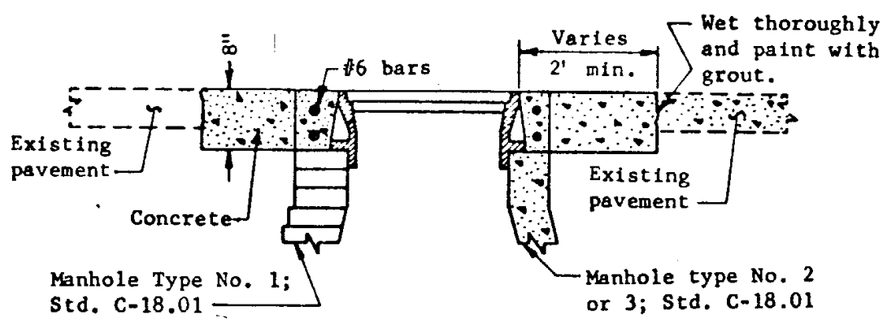

SECTION

PAVEMENT CUT REPLACEMENT FOR MANHOLE

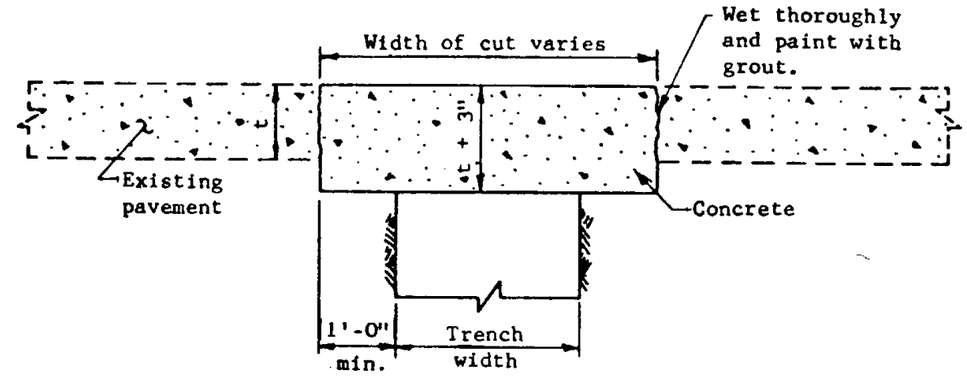

CUT IN CONCRETE PAVEMENT

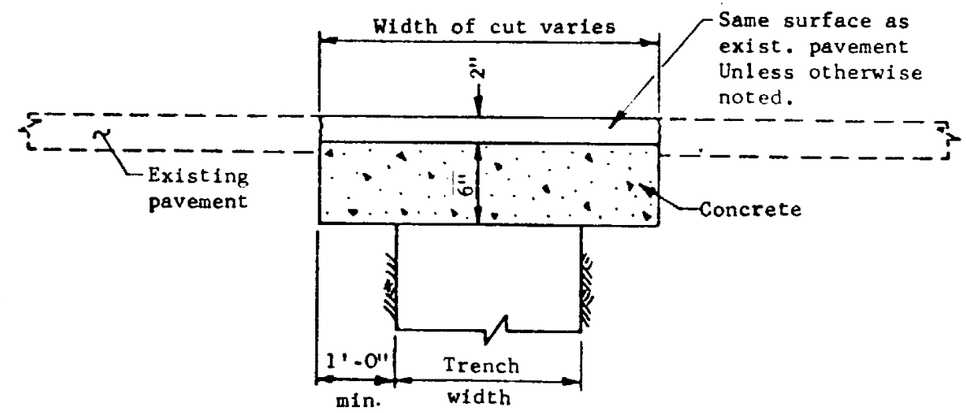

CUT IN BITUMINOUS PAVEMENT

GENERAL NOTES
All concrete shall be Class A.

ARIZONA HIGHWAY DEPARTMENT PLANS DIVISION			Rev
PAVEMENT CUT REPLACEMENT			
Drawn	O.K.	Drawing No.	
Traced	R.A.F. 12-5-66	C-7.03	
Checked	J.P.O. JPO 5-68		
Approved Engr. Plans	G. Seidecker 5-68		

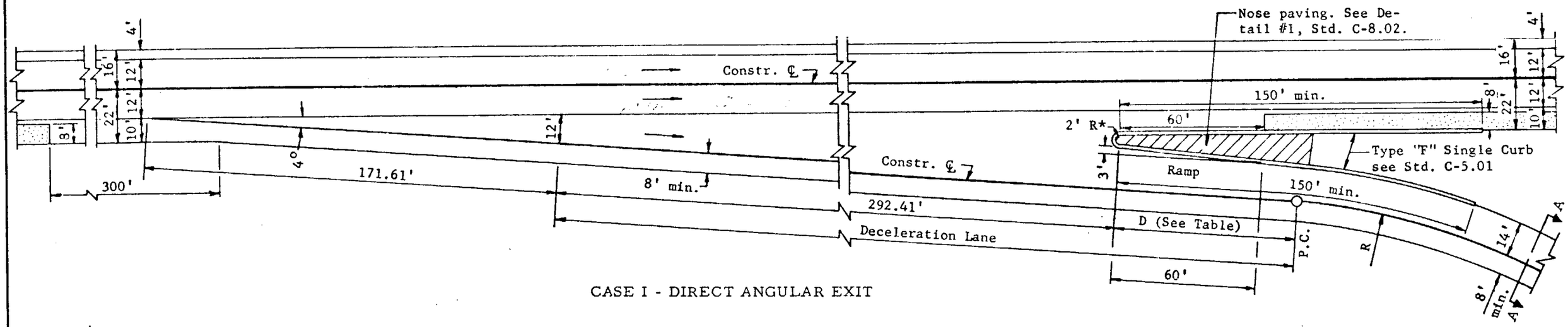

CASE I - DIRECT ANGULAR EXIT

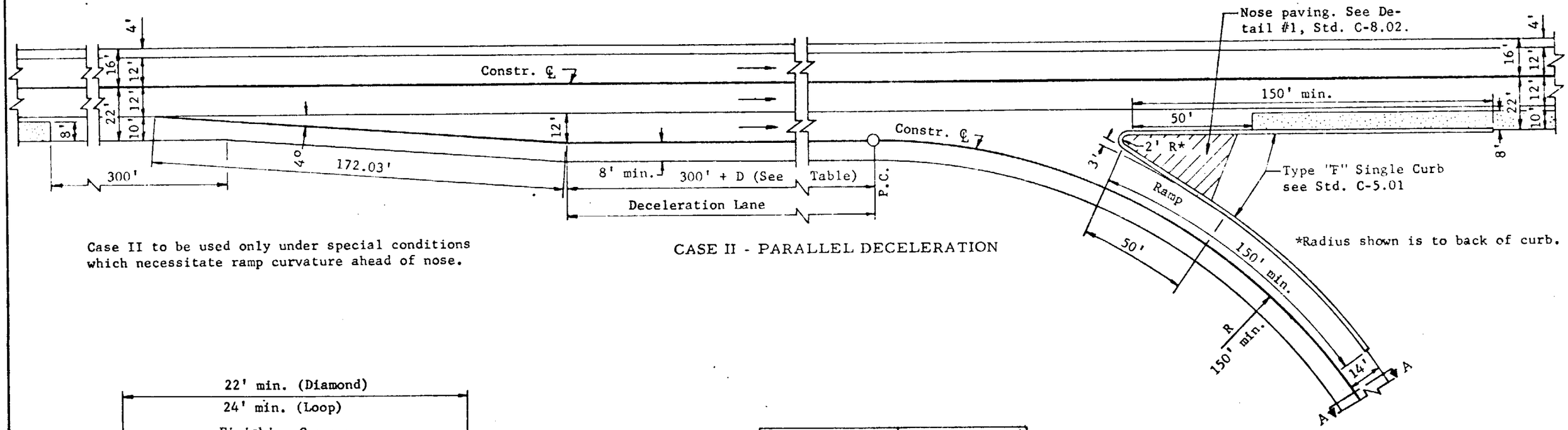

Case II to be used only under special conditions which necessitate ramp curvature ahead of nose.

CASE II - PARALLEL DECELERATION

*Radius shown is to back of curb.

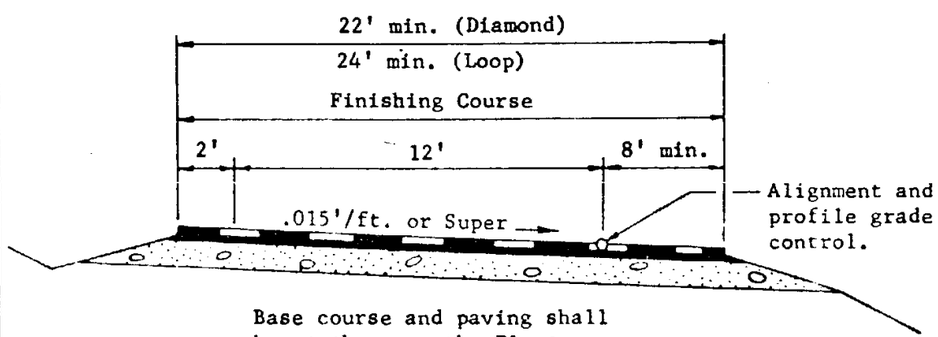

Base course and paving shall be as shown on the Plans.

SECTION A-A

R (Feet)	Min. D (Feet)
Less than 250'	275'
250' - 450'	200'
450' - 1000'	100'
Over 1000'	60'

GENERAL NOTES

Ramp take off from main curved roadway should provide equivalent minimum deceleration control distances.

Shaded areas indicate differential shoulder delineation.

See Pavement Marking Standards for stripe details.

ARIZONA HIGHWAY DEPARTMENT
PLANS DIVISION

TYPICAL EXIT RAMP TERMINALS

Drawn	C.B.	3-60
Traced	S.L.T.	8-67
Checked	J.P.O.	5-68
Approved Engr. Plans	H Heidecker	5-68

Drawing No. C-8.01

Rev

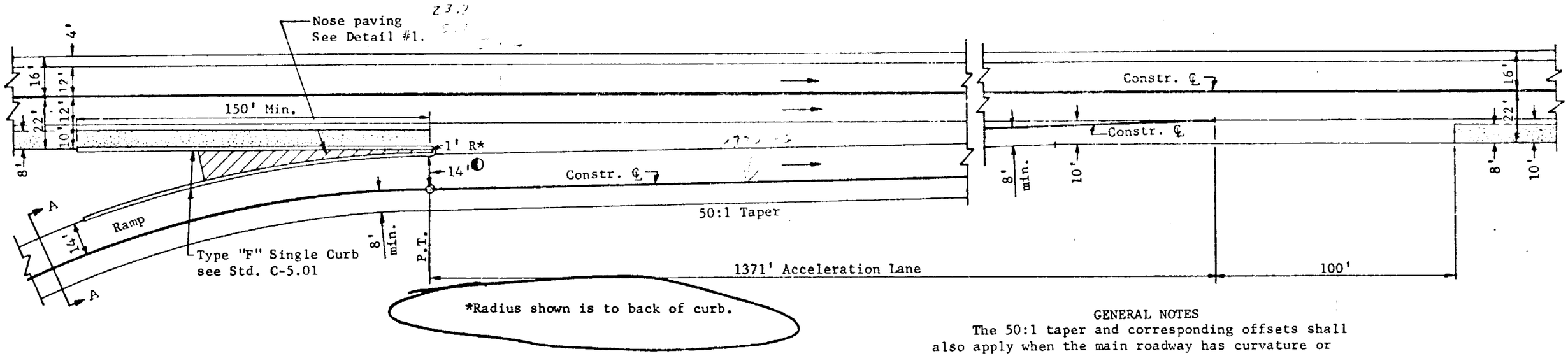

GENERAL NOTES

The 50:1 taper and corresponding offsets shall also apply when the main roadway has curvature or combined tangent and curvature.

Shaded areas indicate differential shoulder delineation.

See Pavement Marking Standards for stripe details.

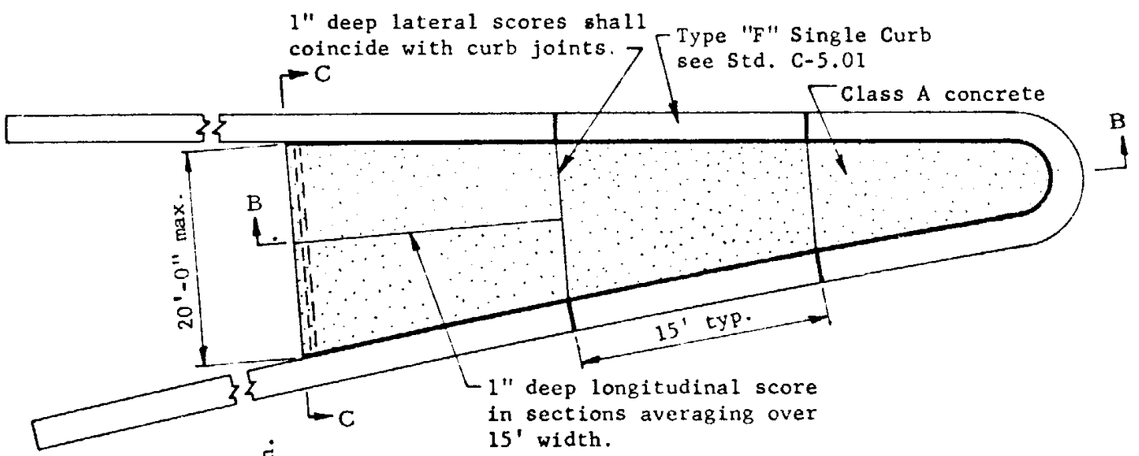

PLAN

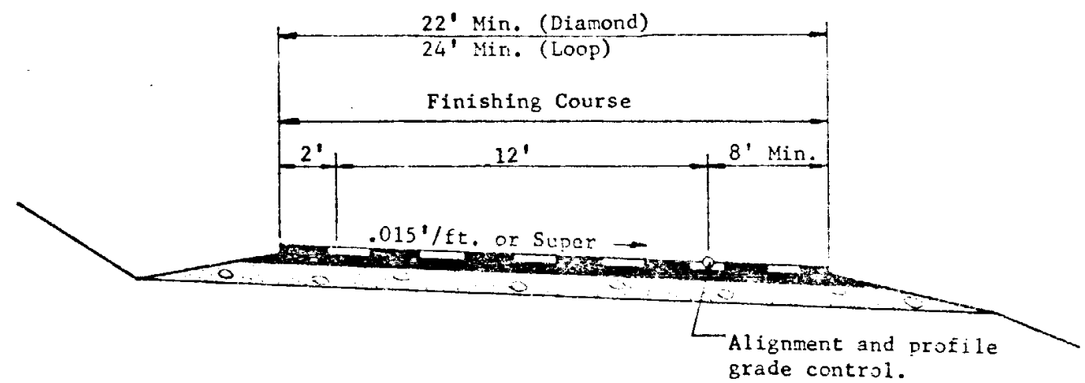

SECTION A-A

Base course and paving shall be as shown on the plans.

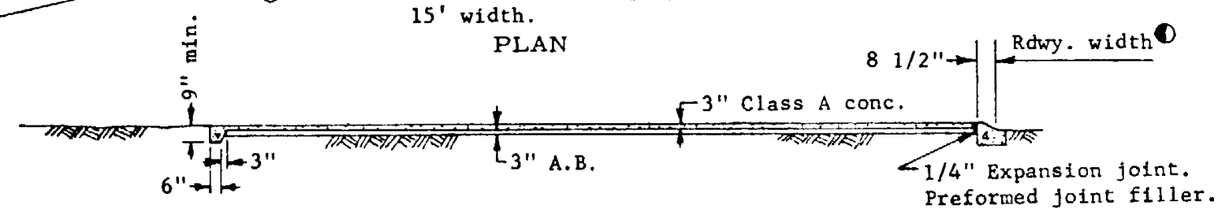

SECTION B-B

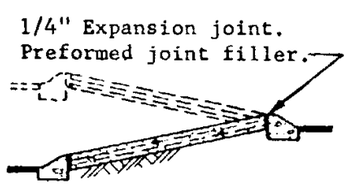

SECTION C-C

NOTE: All joints and scores shall be edged with a 1/4" radius tool.
Extend nose paving to a 20' max. width or 30' in length measured from the nose, but in no case shall the paving extend beyond curb end.

DETAIL #1 - NOSE PAVING

ARIZONA HIGHWAY DEPARTMENT PLANS DIVISION			Rev
TYPICAL ENTRANCE RAMP TERMINAL			
Drawn	C.B. 3-68	Drawing No.	
Traced	S.L.T. 8-67		
Checked	J.P.O. 5-68	C-8.02	
Approved Engr. Plans	H. Weidecker 5-68		

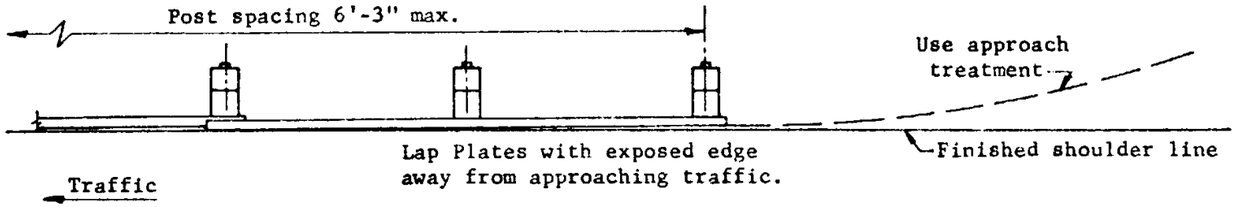

PLAN

GENERAL NOTES

Posts and blocks shall be nominal 8" X 8" rough, pressure treated and unpainted. Holes shall be bored before treatment.

All guard rail plate, fittings, hardware, etc. shall be galvanized.

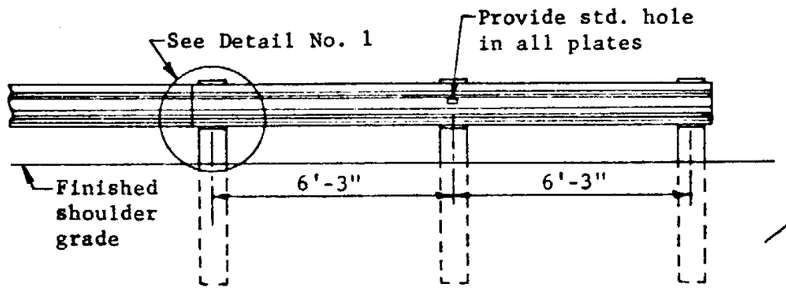

FACE ELEVATION

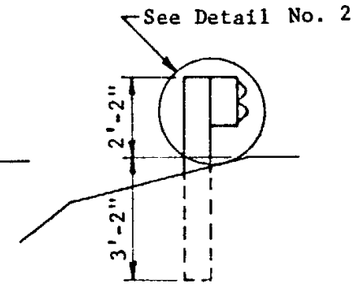

SIDE ELEVATION

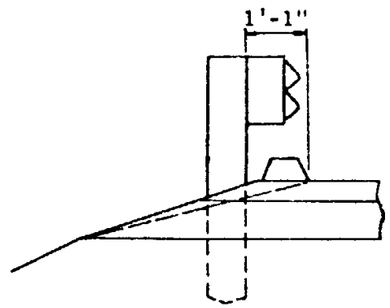

Installation of Guard Rail in embankment curb sections.

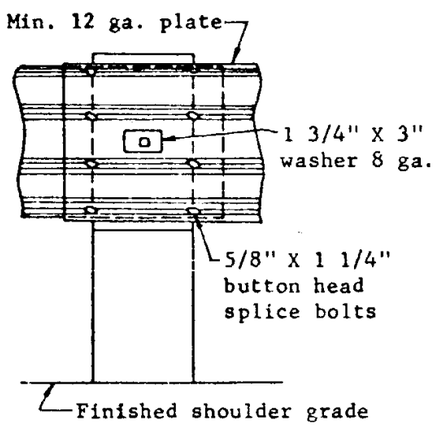

DETAIL NO. 1

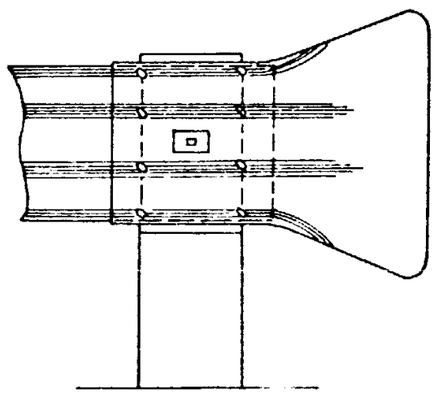

STANDARD TERMINAL SECTION

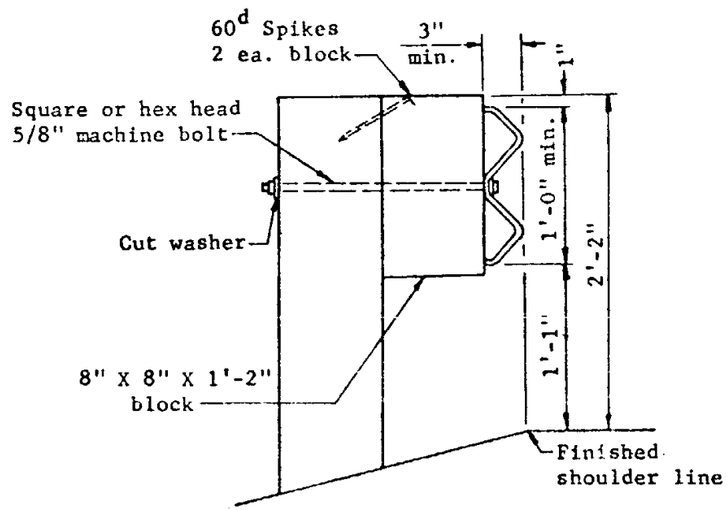

DETAIL NO. 2

ARIZONA HIGHWAY DEPARTMENT
PLANS DIVISION

Rev

GUARD RAIL-STEEL SINGLE FACE DETAILS

Drawn	D.G.	Drawing No.
Traced	S.L.T. 6-67	C-10.01
Checked	J.P.O. 5-68	
Approved Engr. Plans	5-68	

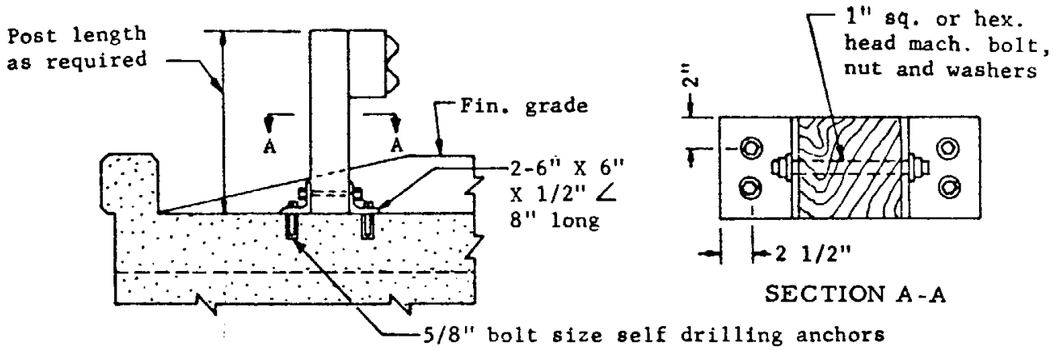

ELEVATION

DETAIL NO. 1-GUARD RAIL POST INSTALLATION ON STRUCTURES

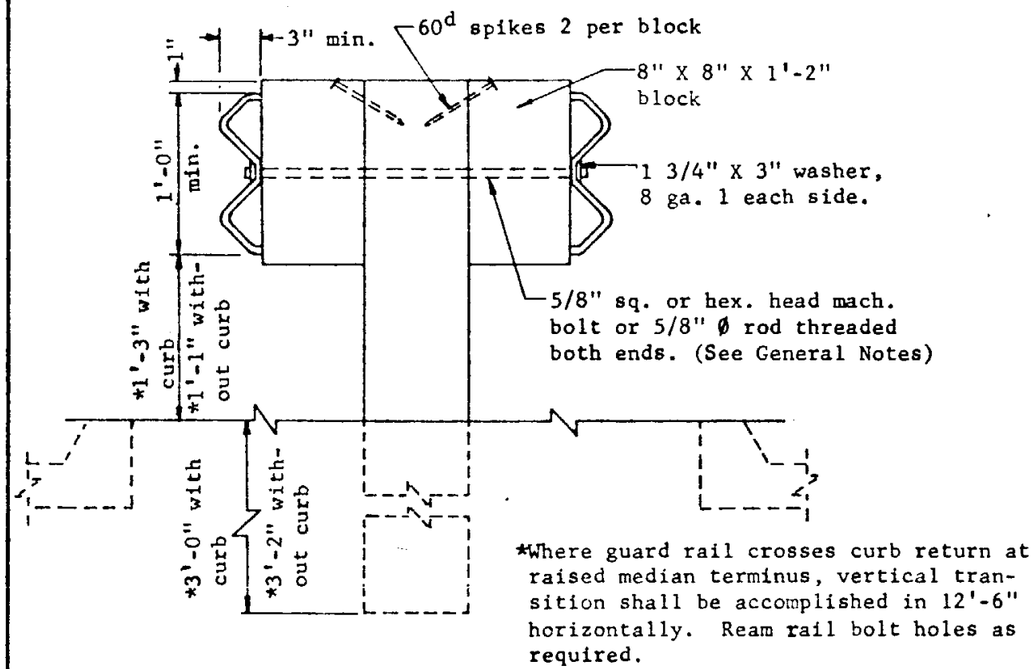

*Where guard rail crosses curb return at raised median terminus, vertical transition shall be accomplished in 12'-6" horizontally. Ream rail bolt holes as required.

DETAIL NO. 2 - MEDIAN BARRIER

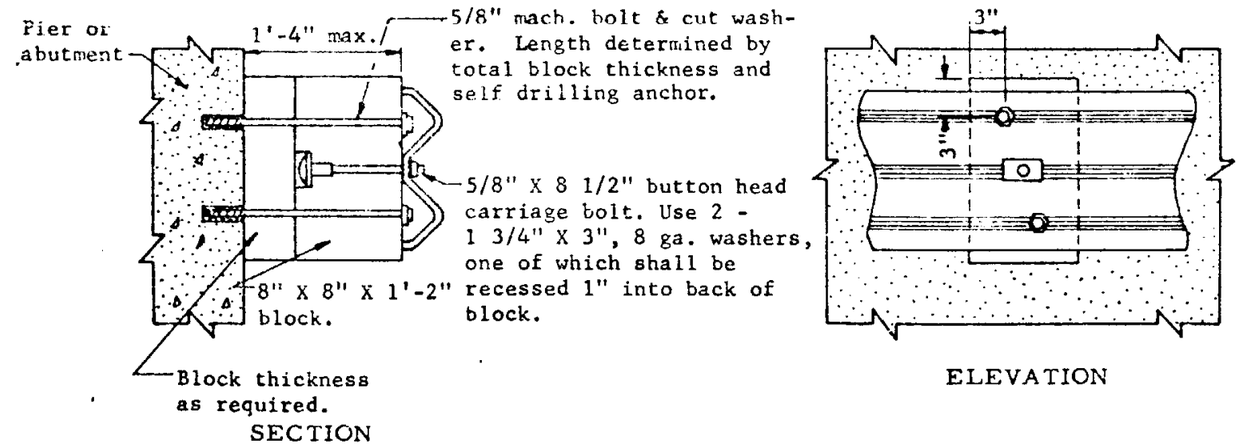

DETAIL NO. 3 - ATTACHMENT OF GUARD RAIL TO PIERS

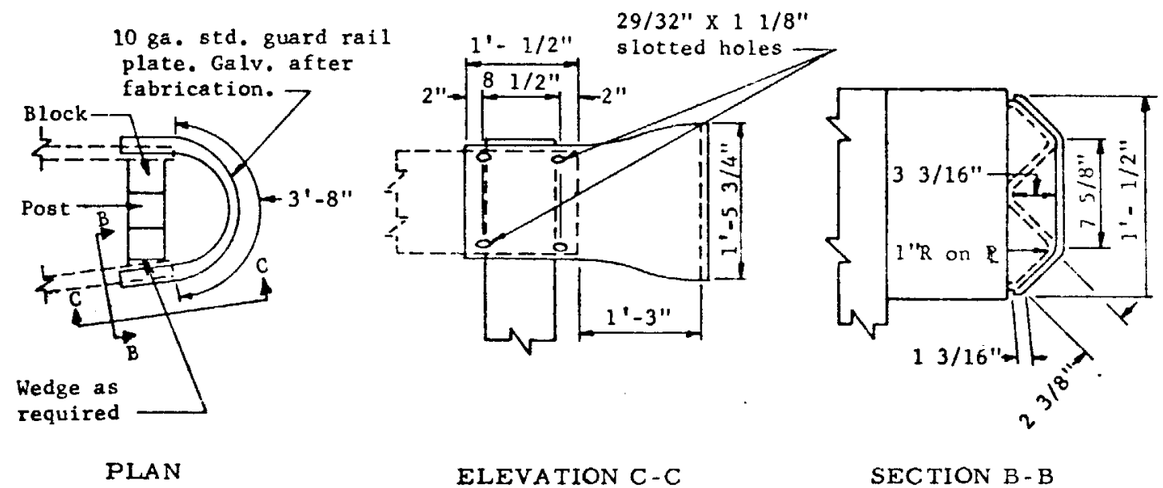

DETAIL NO. 4 - SPECIAL TERMINAL SECTION

GENERAL NOTES

For other applicable guard rail details, see Std. C-10.01.

Bolt ends shall not project more than 1 1/2" beyond face of block. If adjustment shortening is required, threads shall be left in functional condition.

5/8" bolt size self drilling anchors shall have a min. 1500# pull out strength in 2500 p.s.i. concrete in accordance with manufacturer's specifications.

ARIZONA HIGHWAY DEPARTMENT PLANS DIVISION			Rev
GUARD RAIL - STEEL MISCELLANEOUS DETAILS			
Drawn	D.G. 5-67	Drawing No.	
Traced	S.L.T. 9-67		
Checked	J.P.O. JPO 5-68	C-10.02	
Approved Engr. Plans	G Whitehead 5-68		

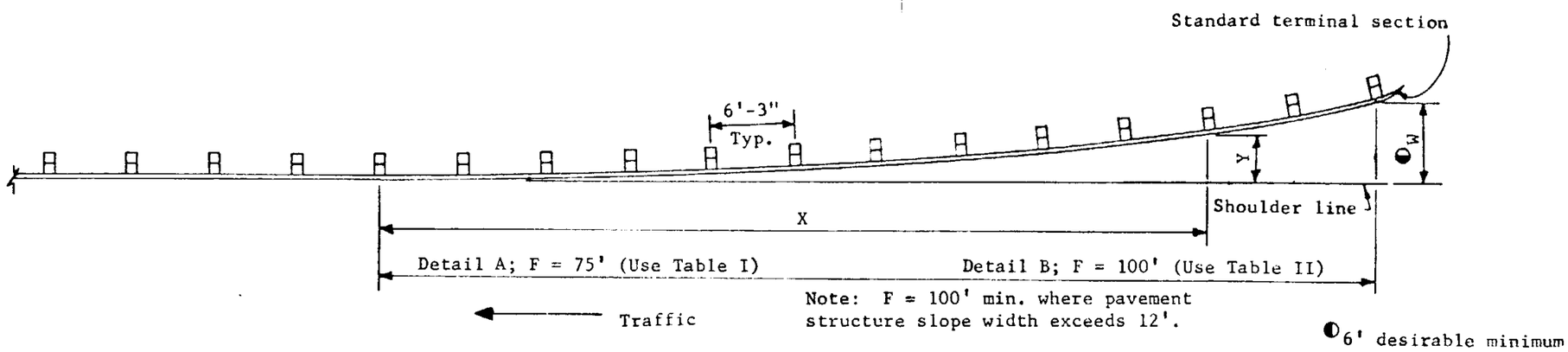

GENERAL NOTES

When the value of W and/or F is different than values shown in the tables, use the formula to compute applicable Y values.

Where necessary, dimension F may be increased to provide better alignment and grade.

TABLE I

X	Y (Feet)			
	W			
	3'-0"	4'-0"	5'-0"	6'-0"
12'-6"	0.08	0.11	0.14	0.17
25'-0"	0.33	0.44	0.55	0.67
37'-6"	0.75	1.00	1.25	1.50
50'-0"	1.33	1.78	2.22	2.67
62'-6"	2.08	2.78	3.42	4.11
75'-0"	3.00	4.00	5.00	6.00

TABLE II

X	Y (Feet)					
	W					
	5'-0"	6'-0"	7'-0"	8'-0"	9'-0"	10'-0"
12'-6"	0.08	0.09	0.11	0.12	0.14	0.16
25'-0"	0.31	0.37	0.44	0.50	0.56	0.62
37'-6"	0.70	0.84	0.99	1.13	1.27	1.41
50'-0"	1.25	1.50	1.75	2.00	2.25	2.50
62'-6"	1.90	2.28	2.66	3.01	3.42	3.91
75'-0"	2.81	3.39	3.94	4.50	5.06	5.62
87'-6"	3.81	4.57	5.34	6.10	6.86	7.66
100'-0"	5.00	6.00	7.00	8.00	9.00	10.00

$Y = (W)X^2/F^2$ = Offset from shoulder line to guard rail.
W = Distance between shoulder line and desired location of end of guard rail.
F = Length of flared guard rail.
X = Distance from beginning of parabolic flare.

6'-0" indicates the preferred value.

ARIZONA HIGHWAY DEPARTMENT
PLANS DIVISION

Rev

GUARD RAIL-STEEL APPROACH END TREATMENT

Drawn	D.G.	Drawing No.
Traced	D.G. 4-3-67	C-10.03
Checked	J.P.O. 5-68	
Approved Engr. Plans	5-68	

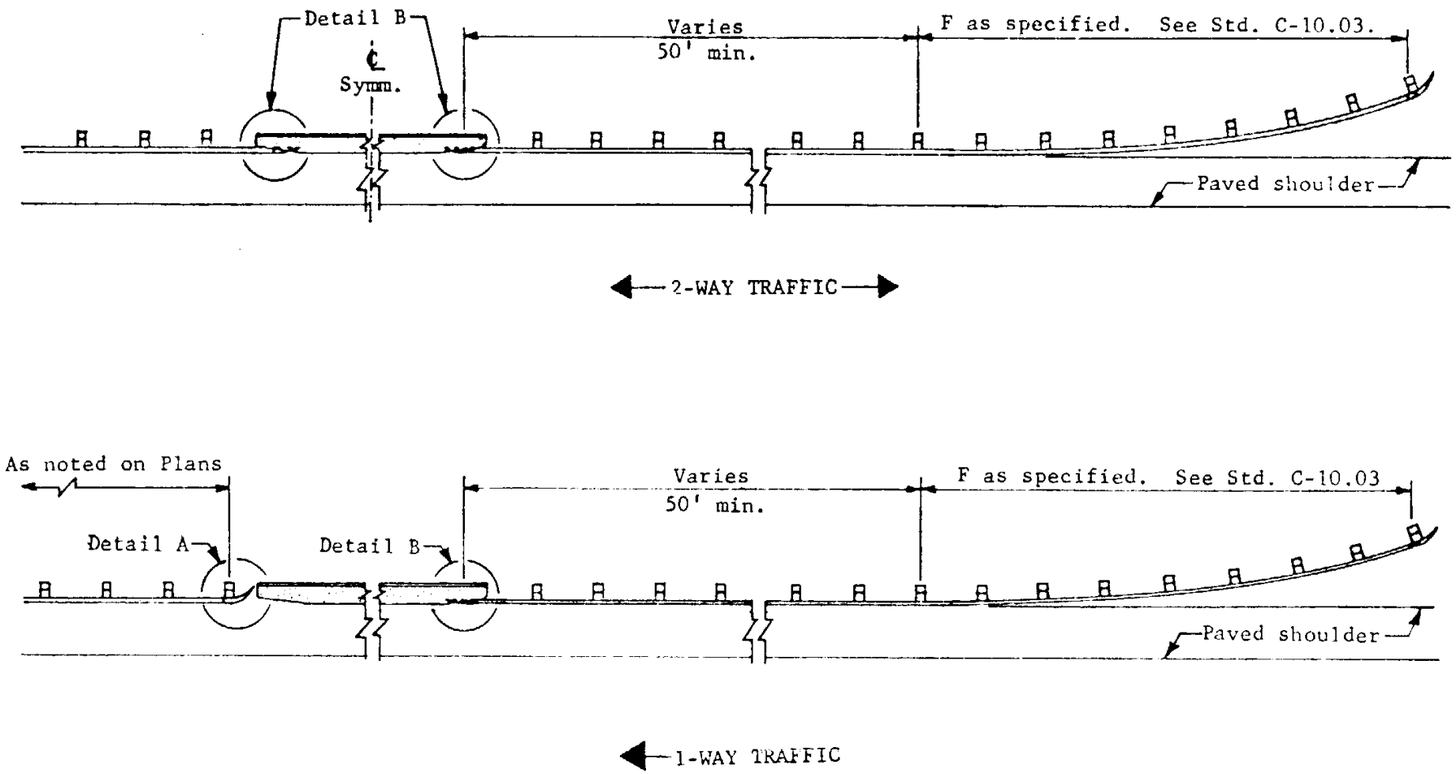

GENERAL NOTES

Where necessary, dimension F may be increased to provide better alignment and grade.

Connect end shoe to dado with 7/8" high strength bolts set in internally threaded tubular expansion anchors having an externally slit expansion element and a single cone expander. Tensile proof test load in 2500 p.s.i. concrete shall be 6500 lbs.

The guard rail end shoe shall be galvanized after fabrication in accordance with A.S.T.M. specification A123.

For other construction details of guard rail attachment to bridge, see Plans.

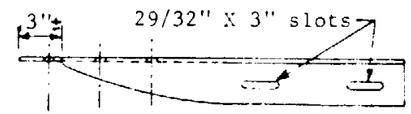

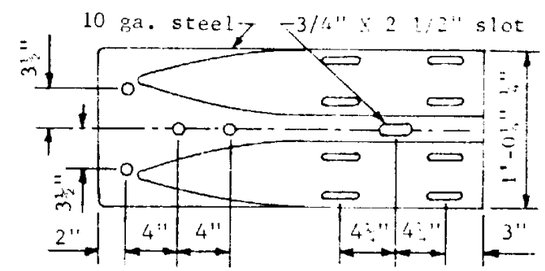

DETAIL C

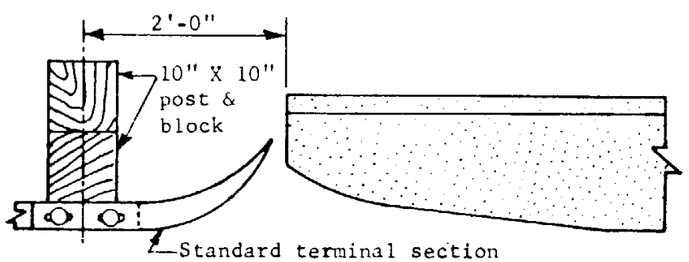

DETAIL A

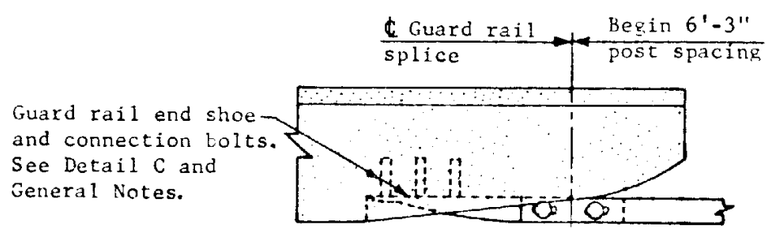

DETAIL B

ARIZONA HIGHWAY DEPARTMENT PLANS DIVISION		Rev 12-2-68
GUARD RAIL-STEEL DETAIL AT BRIDGE APPROACHES		
Drawn	D.G. 11-27-68	Drawing No.
Traced	D.G. 12-2-68	C-10.04
Checked	J.P.O. JPO 12-68	
Approved Engr. Plans	G Heider Dec 1-68	

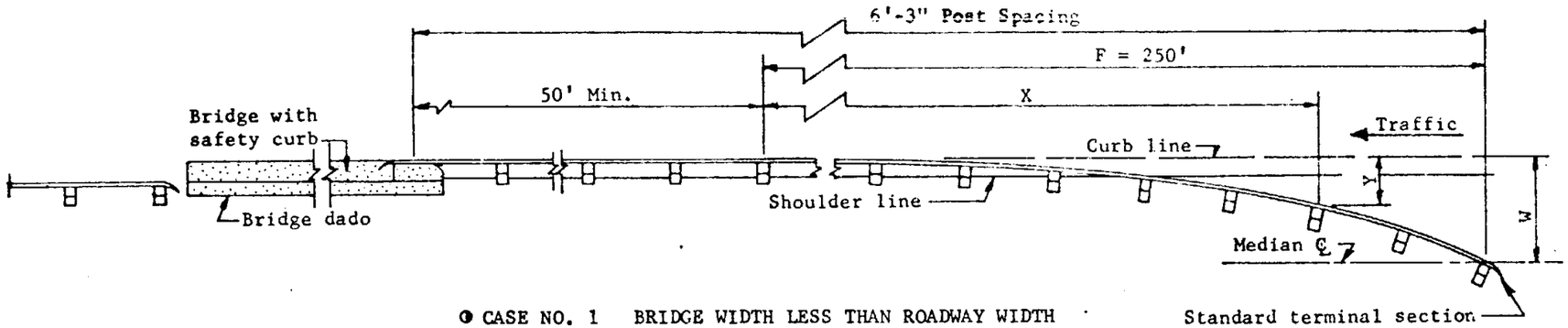

◑ CASE NO. 1 BRIDGE WIDTH LESS THAN ROADWAY WIDTH

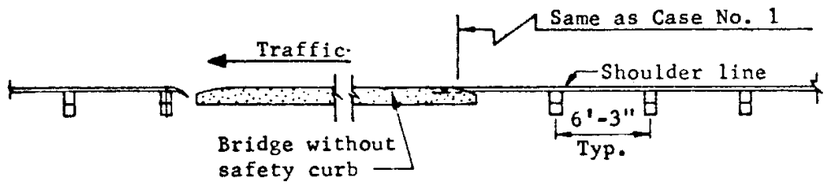

◑ CASE NO. 2 BRIDGE WIDTH EQUALS ROADWAY WIDTH

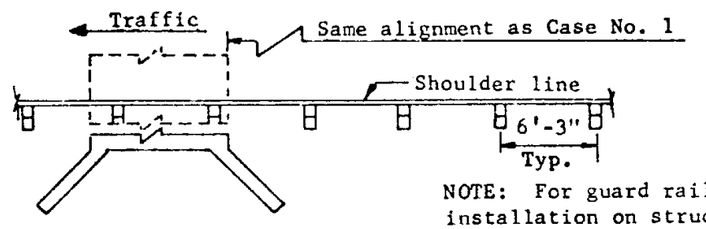

NOTE: For guard rail post installation on structures, see Std. C-10.02

◑ CASE NO. 3 BOX CULVERT

GENERAL NOTES

When the value of W and/or F is different than values shown in the table, use the formula to compute applicable Y values.

For construction details of guard rail attachment to bridge, see Std. C-10.04 and Plans.

Where necessary, dimension F may be increased to provide better alignment and grade.

◑ One way roadway shown. For two way roadway, use symm. guard rail flare and fixed dado attachment at trailing end of bridge.

X	Y(Feet) W				
	26'	30'	34'	38'	42'
12'-6"	.065	.075	.085	.095	.105
25'-0"	.260	.300	.340	.38	.42
37'-6"	.585	.675	.765	.86	.95
50'-0"	1.040	1.200	1.360	1.52	1.68
62'-6"	1.625	1.875	2.125	2.38	2.63
75'-0"	2.340	2.700	3.060	3.42	3.78
87'-6"	3.185	3.675	4.165	4.66	5.15
100'-0"	4.16	4.800	5.440	6.08	6.72
112'-6"	5.265	6.075	6.885	7.70	8.51
125'-0"	6.500	7.500	8.500	9.50	10.50
137'-6"	7.865	9.075	10.285	11.50	12.71
150'-0"	9.360	10.800	12.240	13.68	15.12
162'-6"	10.985	12.675	14.365	16.06	17.75
175'-0"	12.740	14.700	16.660	18.62	20.58
187'-6"	14.625	16.875	19.125	21.38	23.63
200'-0"	16.640	19.200	21.760	24.32	26.88
212'-6"	18.785	21.675	24.565	27.46	30.35
225'-0"	21.060	24.300	27.540	30.78	34.02
237'-6"	23.465	27.075	30.685	34.28	37.88
250'-0"	26.00	30.00	34.00	38.00	42.00

Formula: $Y = (W)\,X^2/F^2$

W = Distance between curb line extended (Case No. 1), or shoulder line (Case Nos. 2 & 3), and median center line.
F = Length of flared portion of guard rail.
X = Distance from beginning of parabolic flare to any 12'-6" multiple of parabolic flare.
Y = Offset from curb line or shoulder line to face of guard rail.

ARIZONA HIGHWAY DEPARTMENT
PLANS DIVISION

GUARD RAIL-STEEL FLARE TO MEDIAN

Drawn	D.G.	Drawing No.
Traced	S.L.T. 9-67	C-10.05
Checked	J.P.O. JPO 5-68	
Approved Engr. Plans	G. Weidecker	

Rev

* Min. Std. approach end treatment
** Std. median flare

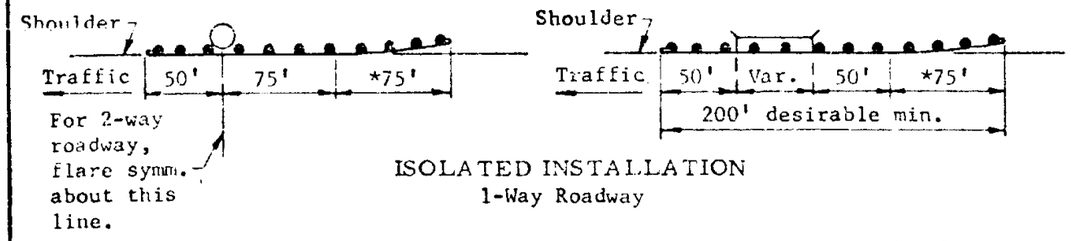

ISOLATED INSTALLATION
1-Way Roadway

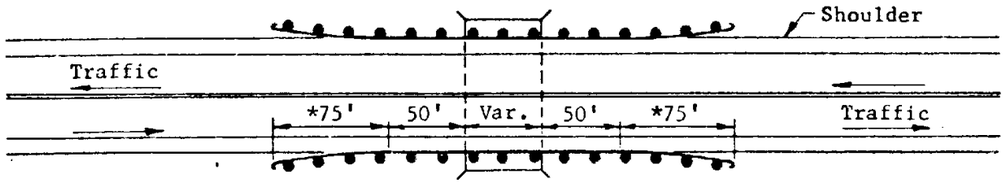

2-WAY ROADWAY OBSTRUCTION

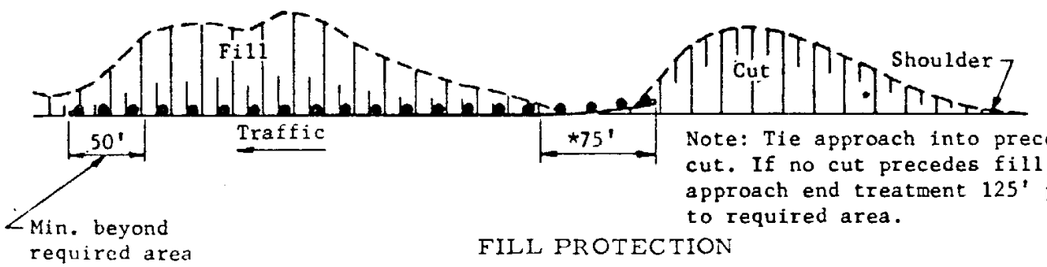

Note: Tie approach into preceding cut. If no cut precedes fill, begin approach end treatment 125' prior to required area.

FILL PROTECTION

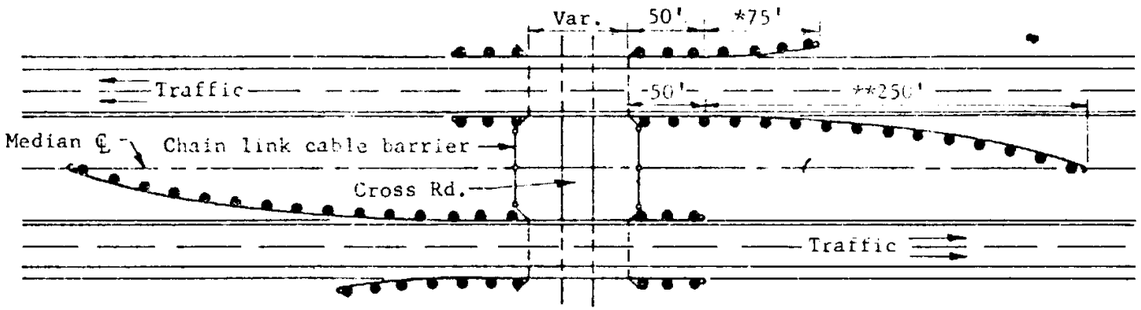

BRIDGE STRUCTURE WITH CROSS ROAD

No guard rail is normally required unless the median is less than 60', traffic lane to traffic lane.

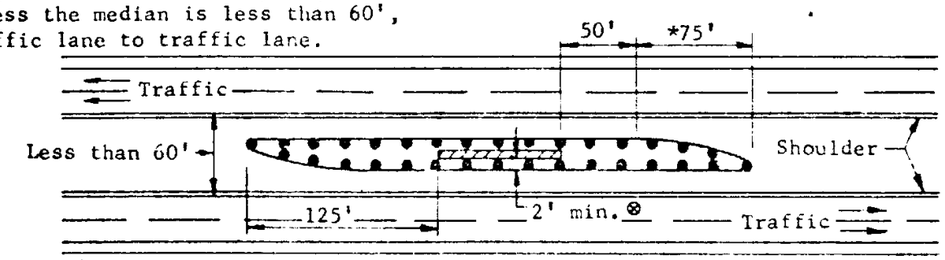

⊗ If distance from face of pier to face of guard rail is less than 2' attach guard rail to pier.

MEDIAN BRIDGE OR SIGN STANDARDS

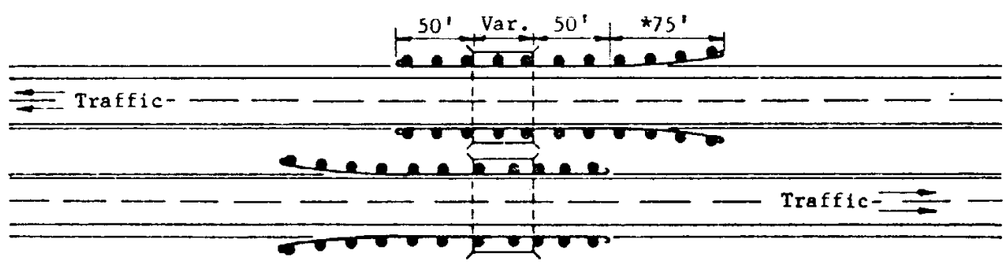

BOX CULVERT WITH DRIVABLE MEDIAN

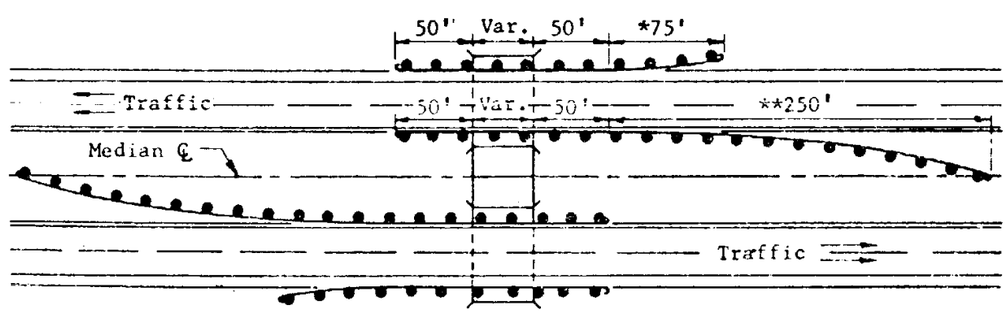

BOX CULVERT WITHOUT DRIVABLE MEDIAN

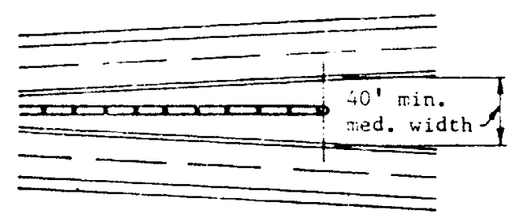

MEDIAN BARRIER TERMINUS

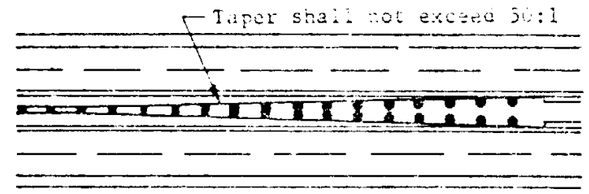

BARRIER TRANSITION AT OVERPASS

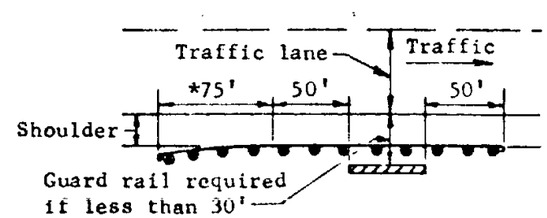

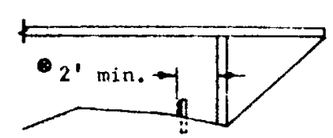

PIER, ABUTMENT OR SIGN BASE
RIGHT SIDE OF ROADWAY

GENERAL NOTES

These drawings DO NOT establish warrants for guard rail installation.

Post spacing shall be 6'-3" throughout.

ARIZONA HIGHWAY DEPARTMENT
PLANS DIVISION

Rev 12-5-08

GUARD RAIL-STEEL TYPICAL INSTALLATIONS

Drawn	S.L.T., R.A.F.	Drawing No.
Traced	R.A.F. 9-67	C-10.06
Checked	J.P.O. 5-68	
Approved Engr. Plans	5-68	

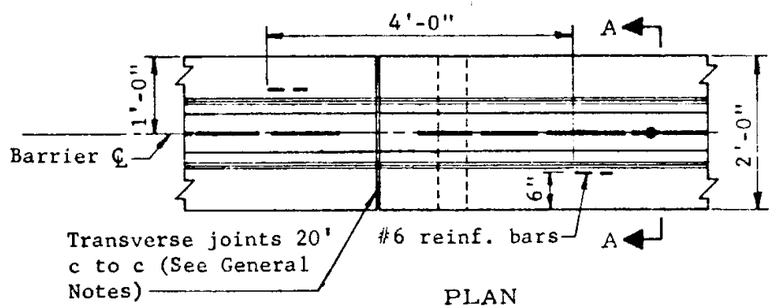

PLAN

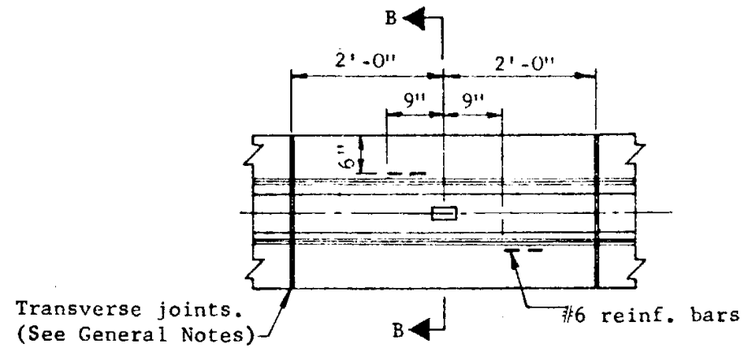

PLAN AT SIGN INSTALLATION

GENERAL NOTES

All concrete shall be Class A.

Transverse joints shall extend through the foundation slab. For continuous or sectional construction, use a 1/4" open joint. Edge joints with a 1/4" radius tool.

Construction joint and #6 bars may be eliminated when barrier and foundation slab are poured monolithic.

For details of transition at terminals and structures, see Std. C-10.09.

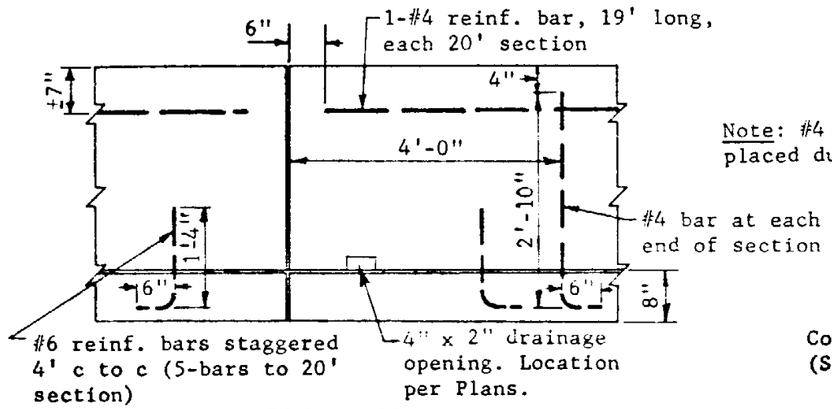

ELEVATION

Note: #4 bars may be placed during pour.

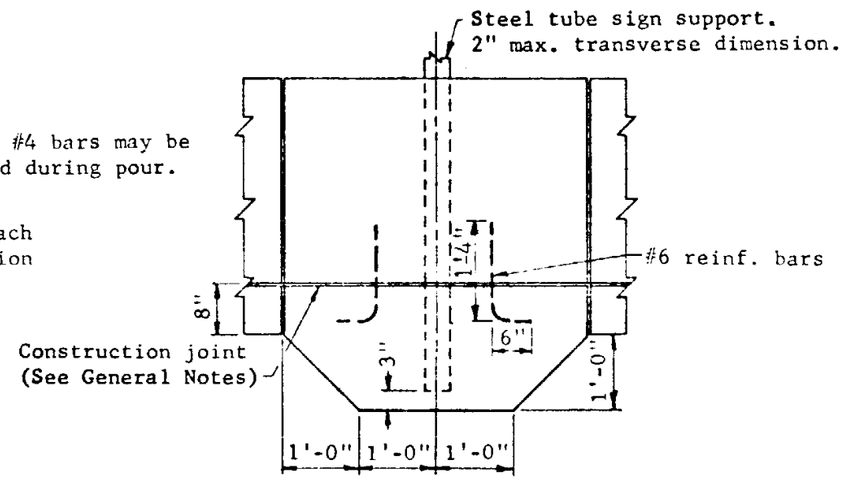

ELEVATION AT SIGN INSTALLATION

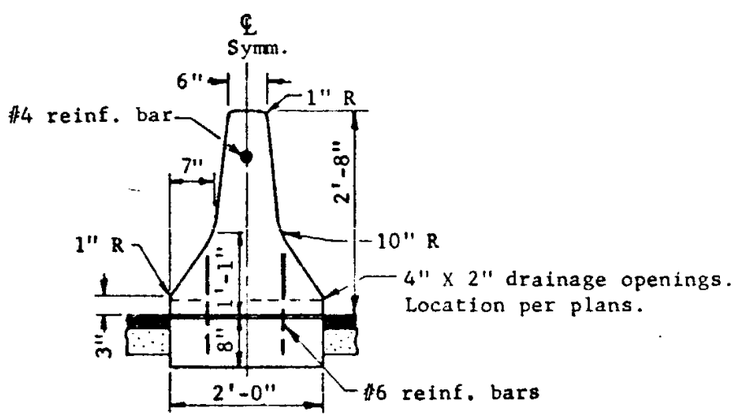

SECTION A-A

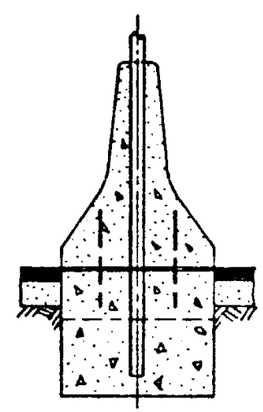

SECTION B-B

ARIZONA HIGHWAY DEPARTMENT PLANS DIVISION			Rev
MEDIAN BARRIER CONCRETE			
Drawn	D.C.	Drawing No.	
Traced	R.A.F. 8/67	C-10.08	
Checked	J.P.O. JPO 5-68		
Approved Engr. Plans	E.Weidicke 5-68		

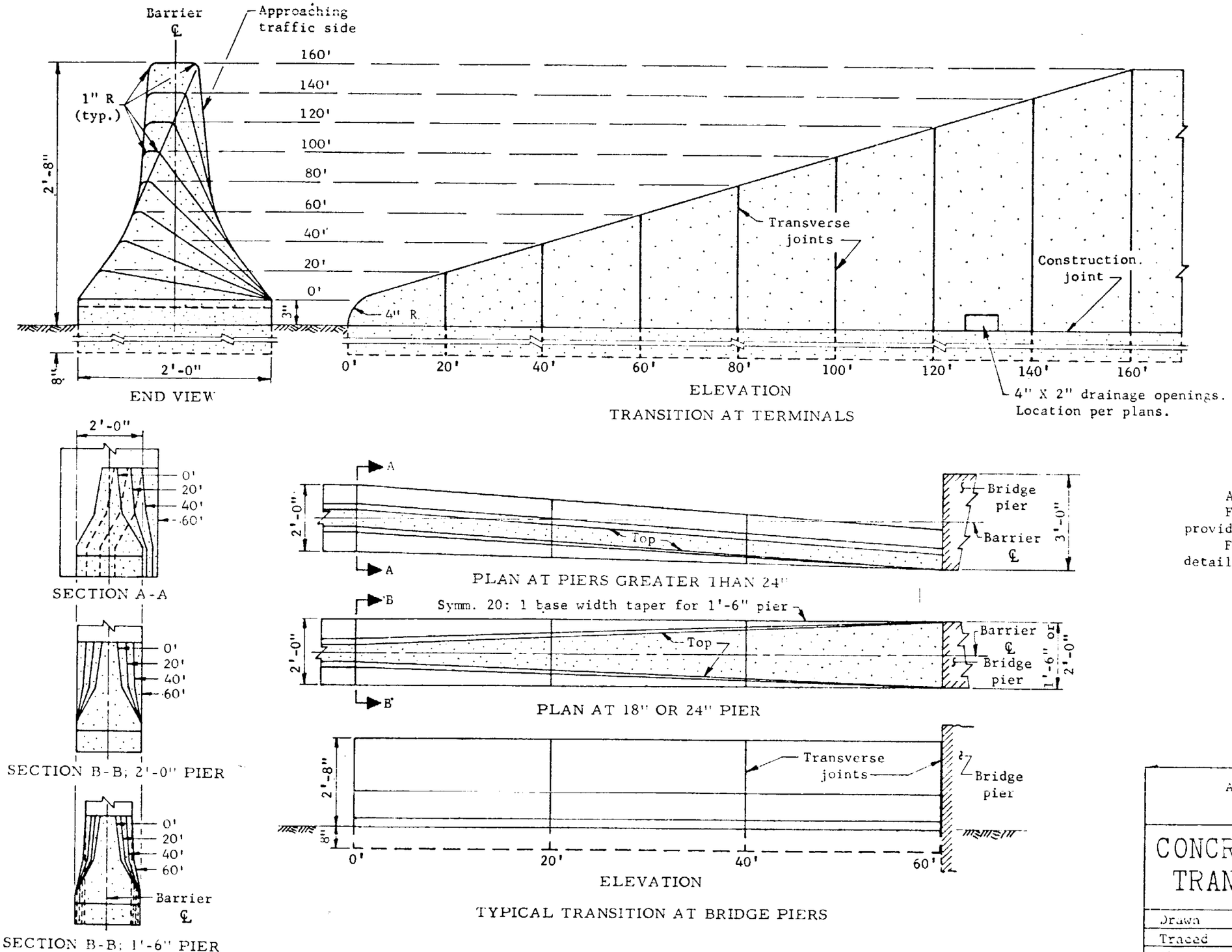

GENERAL NOTES

All concrete shall be Class A.

Faces of median barrier shall provide a smooth transition.

For median barrier construction details, see Std. C-10.08.

ARIZONA HIGHWAY DEPARTMENT
PLANS DIVISION

Rev

CONCRETE MED. BARRIER TRANSITION DETAILS

Drawn	D.G. 7/67	Drawing No.
Traced	R.A.F. 8/67	
Checked	J.P.O. JPO 5-68	C-10.09
Approved Engr. Plans	[signature] 5-68	

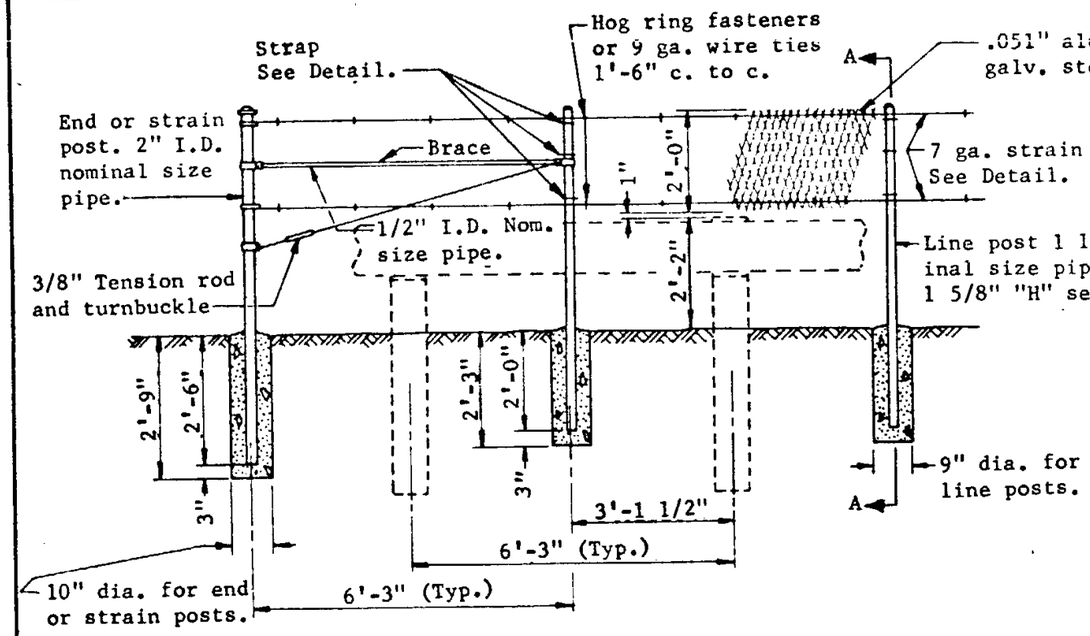

EXPANDED METAL GLARE SCREEN

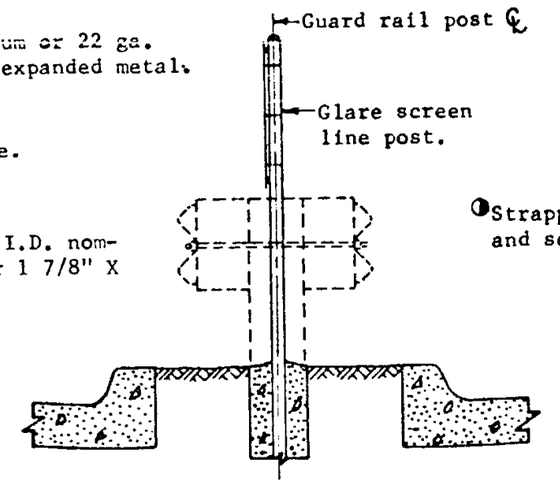

SECTION A-A

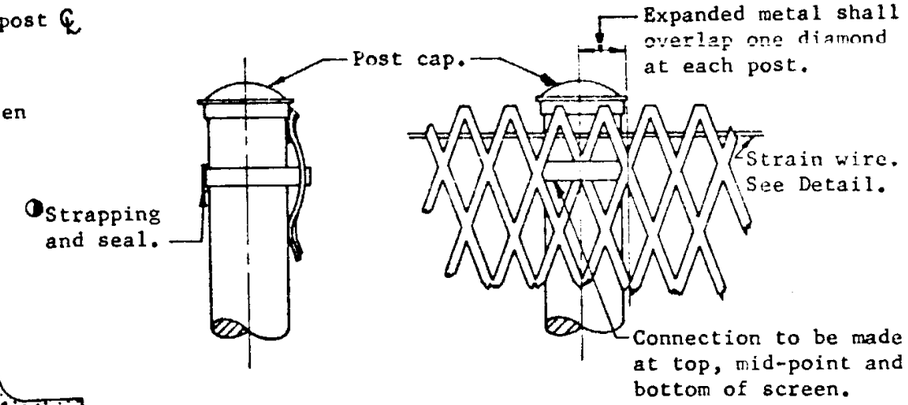

EXPANDED METAL POST CONNECTION DETAIL

Stainless steel strapping with aluminum expanded metal.
Galvanized steel strapping with steel expanded metal.

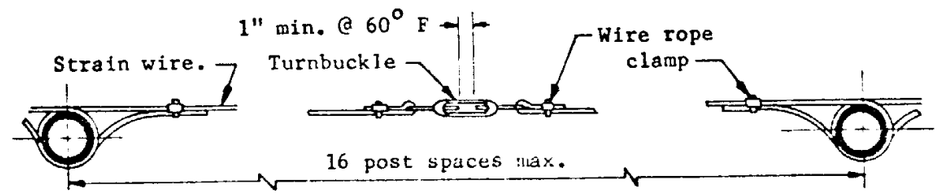

STRAIN WIRE DETAIL

Note: Place intermediate strain posts at 500' (max.) intervals with brace and tension rod each side. If chain link fence type is used, place stretcher bar on each side.

GENERAL NOTES

For guard rail details, see appropriate Guard Rail Standard.

There shall be no connection made between the glare screen and the guard rail.

All steel materials, except stainless, shall be galvanized in accordance with ASTM A-123.

All pipe posts shall be capped.

All concrete shall be Class A.

Expanded metal shall be 0.250" strand width with 1.33" X 4.0" bridge dimensions on tangents and 0.188" strand width with 0.93" X 2.0" bridge dimensions on curves.

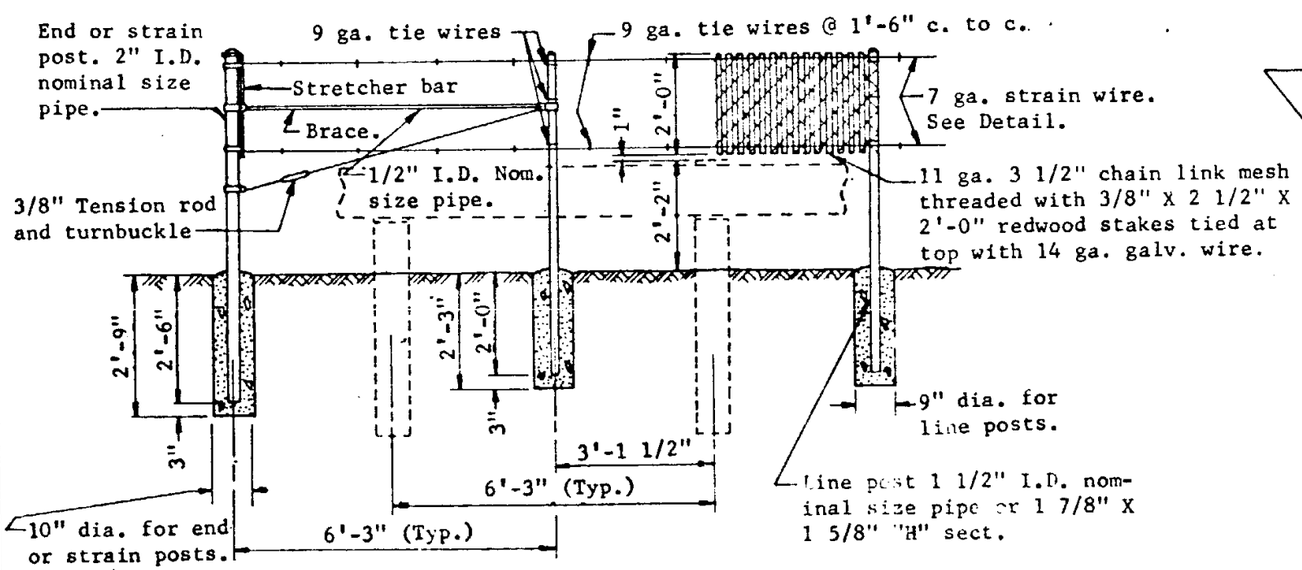

CHAIN LINK FENCE GLARE SCREEN

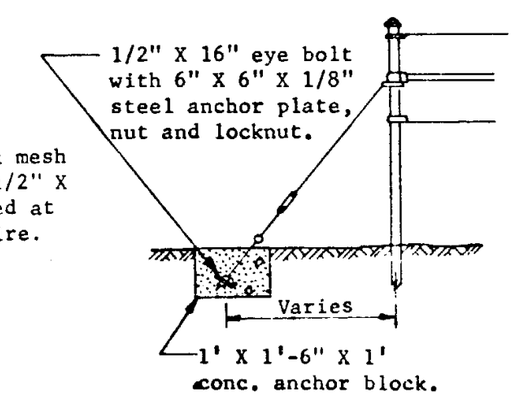

ALTERNATE END POST TENSION ROD LOCATION

ARIZONA HIGHWAY DEPARTMENT PLANS DIVISION			Rev
MEDIAN GLARE SCREEN			
Drawn	R.A.F. 4-67	Drawing No.	
Traced	S.L.T. 7-67		
Checked	J.P.O. JPO 5-68	C-10.10	
Approved Engr. Plans	G Weidecker 5-68		

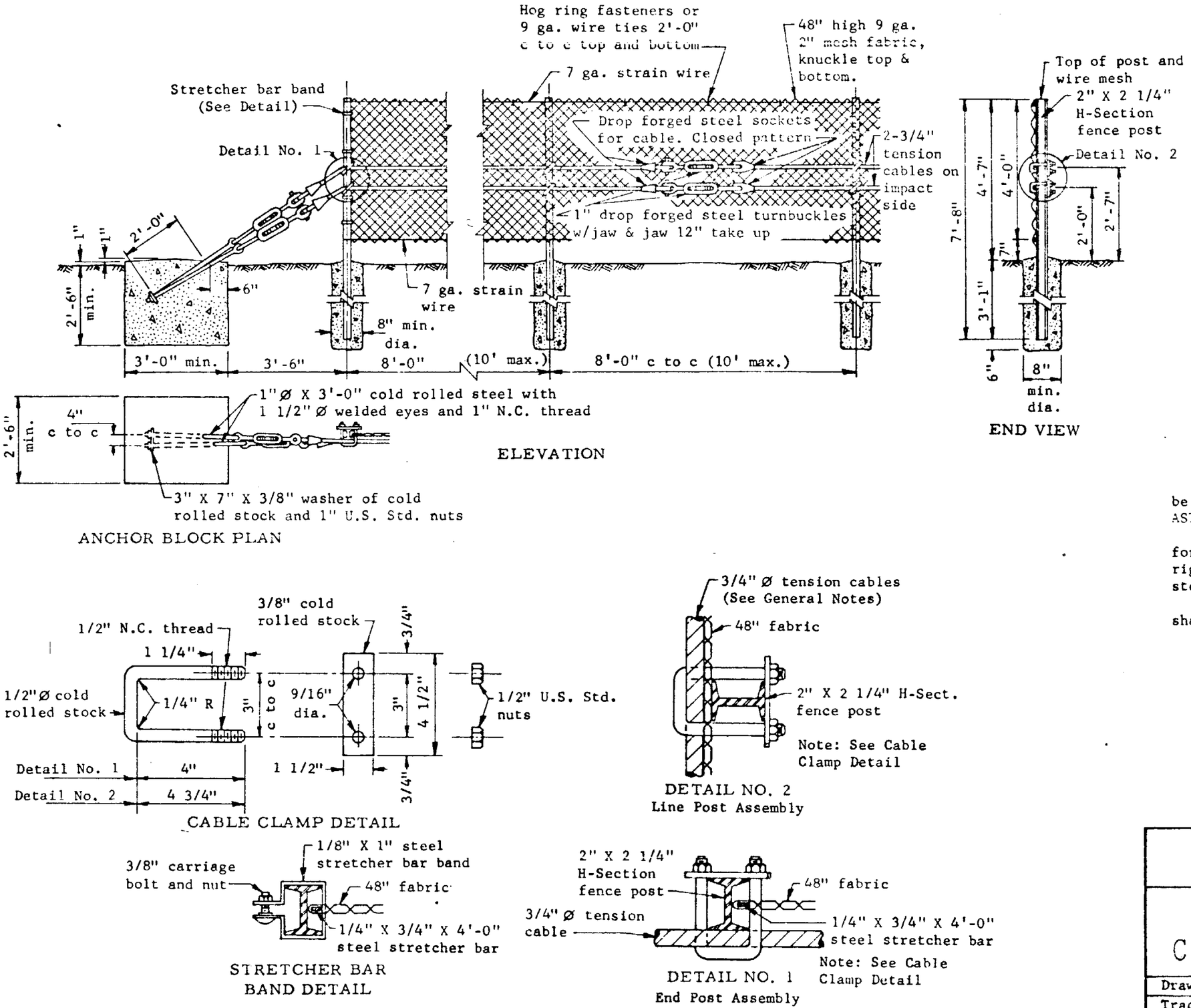

ANCHOR BLOCK PLAN

ELEVATION

END VIEW

CABLE CLAMP DETAIL

DETAIL NO. 2
Line Post Assembly

STRETCHER BAR BAND DETAIL

DETAIL NO. 1
End Post Assembly

GENERAL NOTES

All concrete shall be Class A.

All material and fittings shall be galvanized in accordance with ASTM A 123.

3/4" tension cables shall be preformed, 6 X 19, hemp core, galvanized, right regular lay and of improved plow steel.

Fittings not specifically detailed shall be of approved, heavy duty design.

ARIZONA HIGHWAY DEPARTMENT PLANS DIVISION			Rev
CHAIN LINK CABLE BARRIER FENCE			
Drawn	D.G.	Drawing No.	
Traced	R.A.F 2-68	C-10.11	
Checked	J.P.O 8/0 5-63		
Approved Engr. Plans	[signature]		

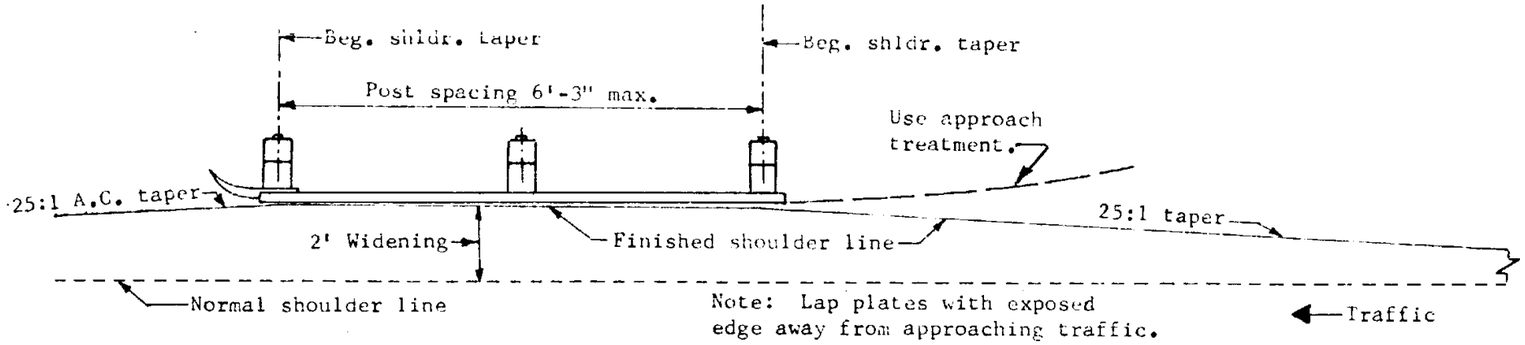

PLAN

GENERAL NOTES

Posts and blocks shall be nominal 8" X 8" rough, pressure treated and unpainted. Holes shall be bored before treatment.

All guard rail plate, fittings, hardware, etc. shall be galvanized.

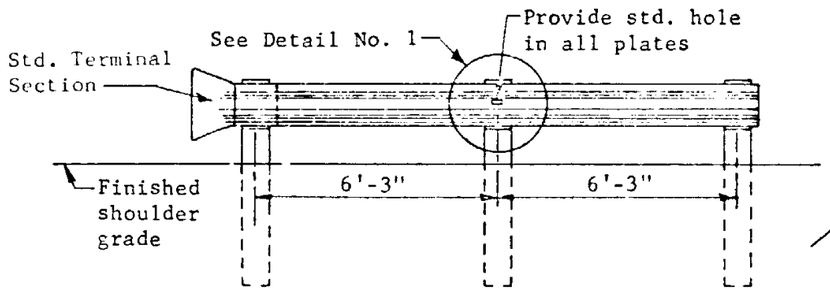

FACE ELEVATION

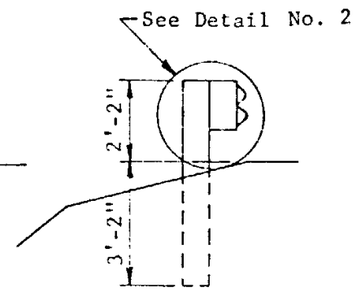

SIDE ELEVATION

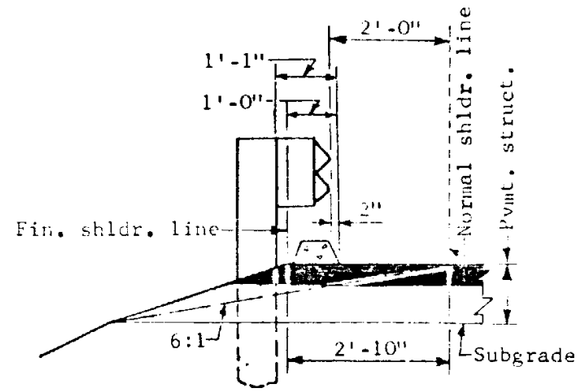

Installation of Guard Rail in embankment curb sections.

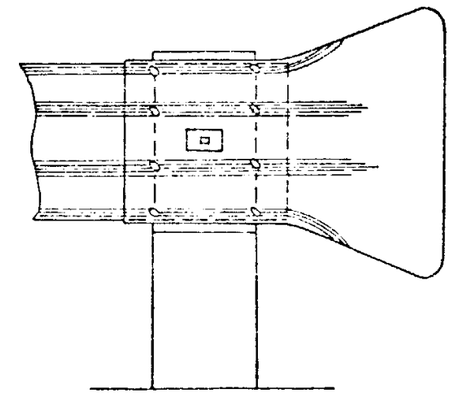

STANDARD TERMINAL SECTION

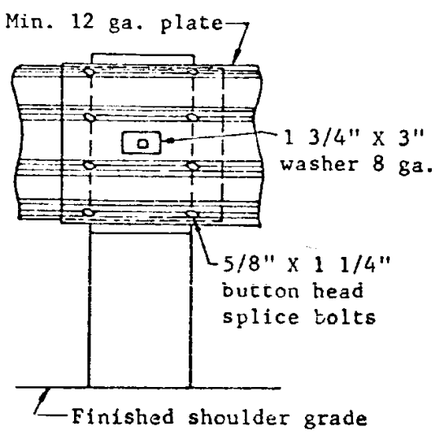

DETAIL NO. 1

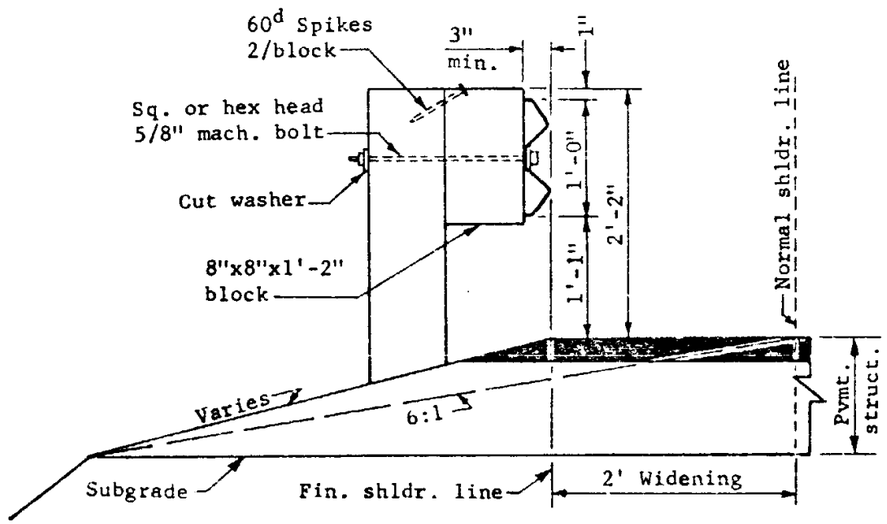

DETAIL NO. 2

ARIZONA HIGHWAY DEPARTMENT PLANS DIVISION			Rev
GUARD RAIL-STEEL SINGLE FACE AND PAVEMENT WIDENING DETAILS			
Drawn	D.G.	Drawing No.	
Traced	S.L.T., D.G. 12-69	C-10.21	
Checked	J.P.O.		
Approved Engr. Plans			

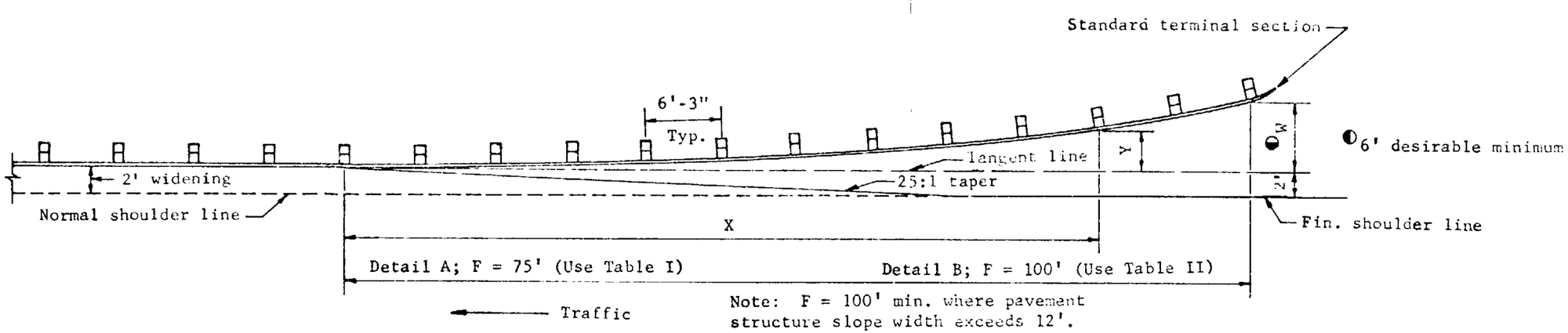

GENERAL NOTES

When the value of W and/or F is different than values shown in the tables, use the formula to compute applicable Y values.

Where necessary, dimension F may be increased to provide better alignment and grade.

TABLE I

X	Y (Feet)			
	W			
	3'-0"	4'-0"	5'-0"	6'-0"
12'-6"	0.08	0.11	0.14	0.17
25'-0"	0.33	0.44	0.55	0.67
37'-6"	0.75	1.00	1.25	1.50
50'-0"	1.33	1.78	2.22	2.67
62'-6"	2.08	2.78	3.42	4.11
75'-0"	3.00	4.00	5.00	6.00

TABLE II

X	Y (Feet)					
	W					
	5'-0"	6'-0"	7'-0"	8'-0"	9'-0"	10'-0"
12'-6"	0.08	0.09	0.11	0.12	0.14	0.16
25'-0"	0.31	0.37	0.44	0.50	0.56	0.62
37'-6"	0.70	0.84	0.99	1.13	1.27	1.41
50'-0"	1.25	1.50	1.75	2.00	2.25	2.50
62'-6"	1.90	2.28	2.66	3.01	3.42	3.91
75'-0"	2.81	3.39	3.94	4.50	5.06	5.62
87'-6"	3.81	4.57	5.34	6.10	6.86	7.66
100'-0"	5.00	6.00	7.00	8.00	9.00	10.00

$Y = (W)X^2/F^2$ = Offset from Tangent line to guard rail.
W = Distance between Tangent line and desired location of end of guard rail.
F = Length of flared guard rail.
X = Distance from beginning of parabolic flare.

[ ] indicates the preferred value.

ARIZONA HIGHWAY DEPARTMENT
PLANS DIVISION

GUARD RAIL-STEEL APPROACH END TREATMENT

Drawn	D.G.	Drawing No.
Traced	S.L.T., D.C. 12-69	C-10.23
Checked	J.P.O.	
Approved Engr. Plans		

Rev

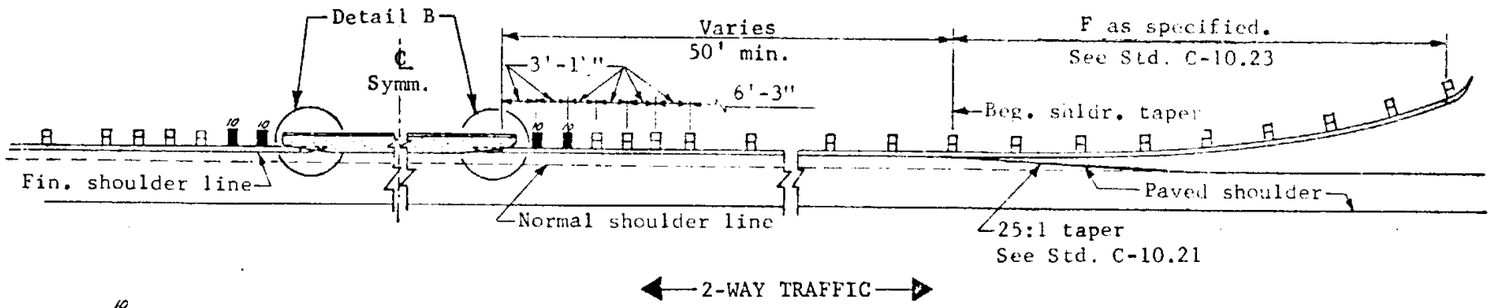

NOTE: ▮ Indicates 10"x10" post & block.

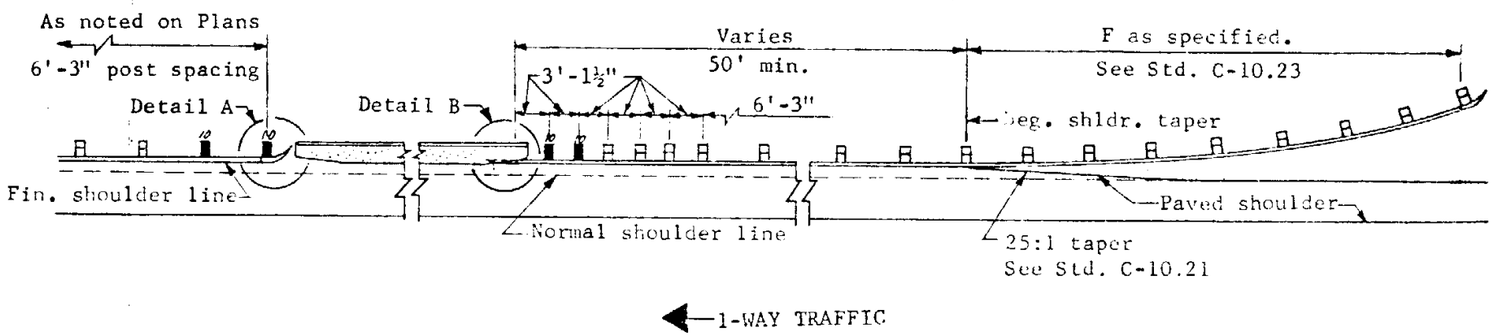

GENERAL NOTES

Where necessary, dimension F may be increased to provide better alignment and grade.

Connect end shoe to dado with 7/8" high strength bolts set in internally threaded tubular expansion anchors having an externally slit expansion element and a single cone expander. Tensile proof test load in 2500 p.s.i. concrete shall be 6500 lbs.

The guard rail end shoe shall be galvanized after fabrication in accordance with A.S.T.M. specification A123.

For other construction details of guard rail attachment to bridge, see Plans.

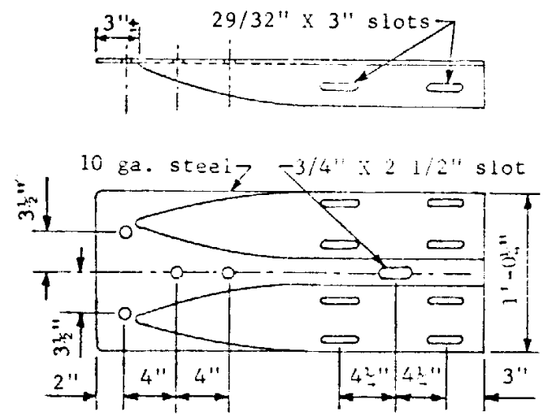

DETAIL C

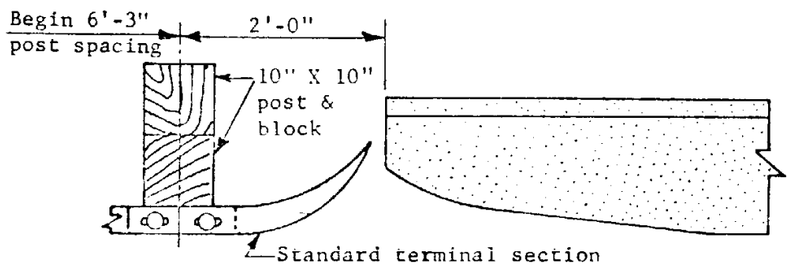

DETAIL A

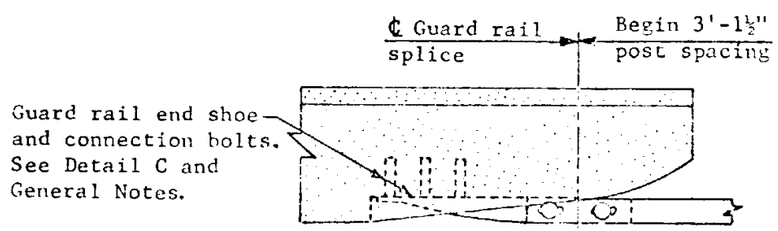

DETAIL B

ARIZONA HIGHWAY DEPARTMENT PLANS DIVISION		Rev
GUARD RAIL-STEEL BRIDGE APPROACH DETAILS		
Drawn	D.G.	Drawing No.
Traced	S.L.T., D.G. 12-69	C-10.24
Checked	J.P.O.	
Approved Engr. Plans		

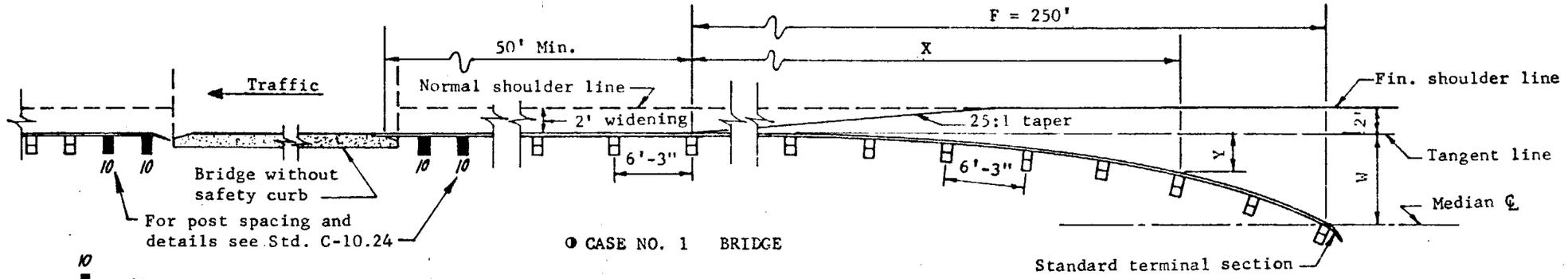

◑ CASE NO. 1 BRIDGE

NOTE: ▮ Indicates 10" x 10" post & block

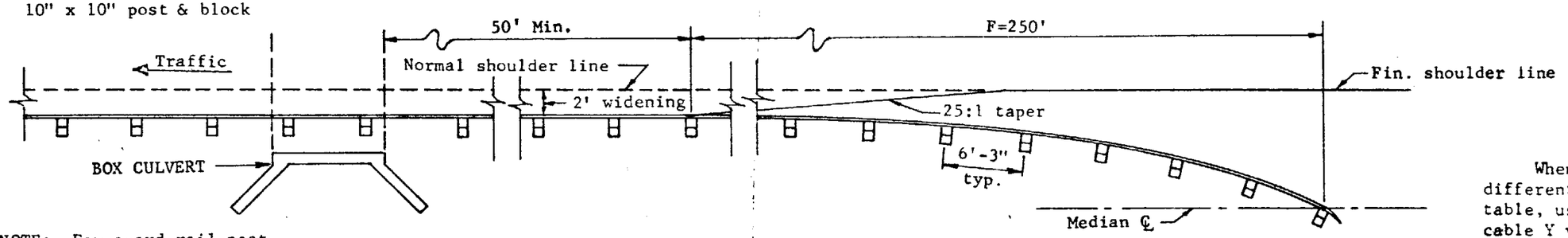

NOTE: For guard rail post installation on structures, see Std. C-10.02

◑ CASE NO. 2 BOX CULVERT

◑ One way roadway shown. For two way roadway, use symm. guard rail flare and fixed dado attachment at trailing end of bridge.

X	Y(Feet) W				
	26'	30'	34'	38'	42'
12'-6"	.065	.075	.085	.095	.105
25'-0"	.260	.300	.340	.38	.42
37'-6"	.585	.675	.765	.86	.95
50'-0"	1.040	1.200	1.360	1.52	1.68
62'-6"	1.625	1.875	2.125	2.38	2.63
75'-0"	2.340	2.700	3.060	3.42	3.78
87'-6"	3.185	3.675	4.165	4.66	5.15
100'-0"	4.16	4.800	5.440	6.08	6.72
112'-6"	5.265	6.075	6.885	7.70	8.51
125'-0"	6.500	7.500	8.500	9.50	10.50
137'-6"	7.865	9.075	10.285	11.50	12.71
150'-0"	9.360	10.800	12.240	13.68	15.12
162'-6"	10.985	12.675	14.365	16.06	17.75
175'-0"	12.740	14.700	16.660	18.62	20.58
187'-6"	14.625	16.875	19.125	21.38	23.63
200'-0"	16.640	19.200	21.760	24.32	26.88
212'-6"	18.785	21.675	24.565	27.46	30.35
225'-0"	21.060	24.300	27.540	30.78	34.02
237'-6"	23.465	27.075	30.685	34.28	37.88
250'-0"	26.00	30.00	34.00	38.00	42.00

$Y = (W)X^2/F^2$ = Offset from Tangent line to guard rail.
W = Distance between Tangent line and median center line.
F = Length of flared portion of guard rail.
X = Distance from beginning of parabolic flare to any 12'-6" multiple of parabolic flare.

GENERAL NOTES

When the value of W and/or F is different than values shown in the table, use the formula to compute applicable Y values.

For construction details of guard rail attachment to bridge, see Std. C-10.24 and Plans.

Where necessary, dimension F may be increased to provide better alignment and grade.

ARIZONA HIGHWAY DEPARTMENT
PLANS DIVISION

GUARD RAIL-STEEL FLARE TO MEDIAN

Drawn	D.G.	Drawing No.
Traced	S.L.T.,D.G. 12-69	C-10.25
Checked	J.P.O.	
Approved Engr. Plans		

Rev

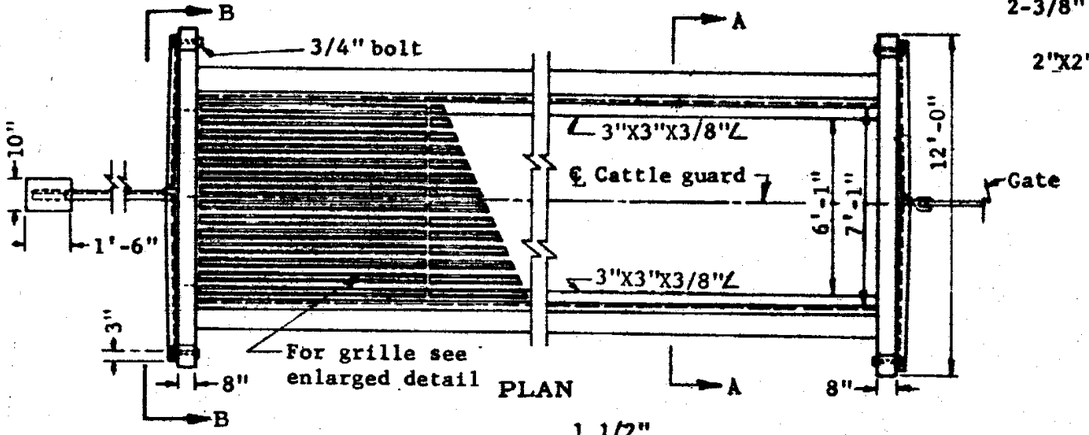

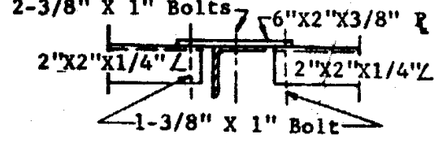

DETAIL FOR ∠ POST

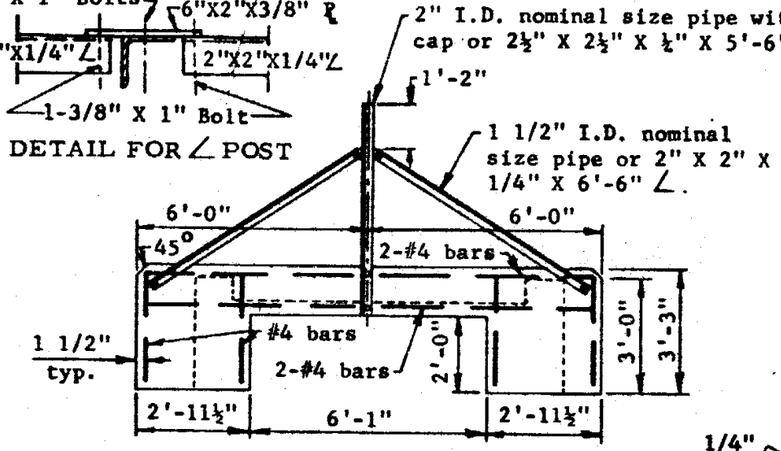

ELEVATION B-B

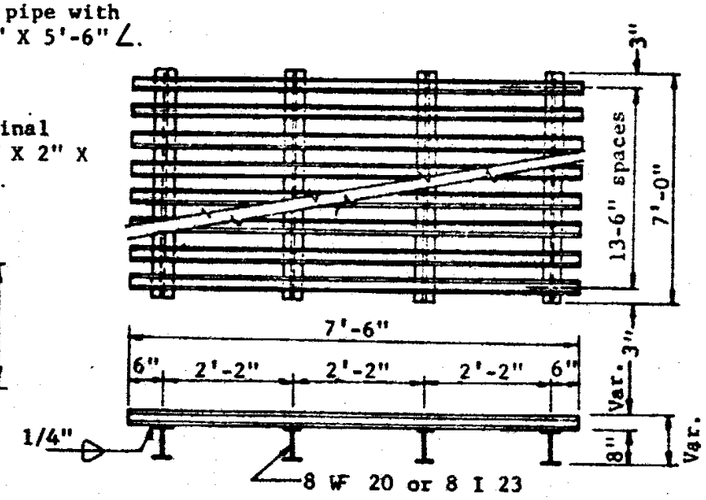

DETAIL OF WELDED GRILLE UNIT

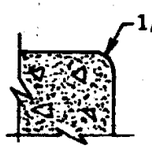

ROUND ALL EXPOSED CORNERS AS SHOWN

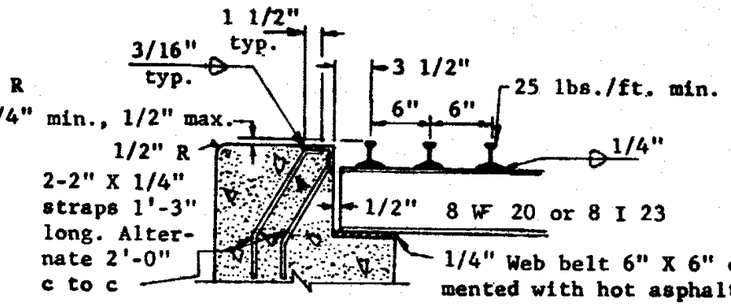

PART SECTION A-A

RAIL TREADS

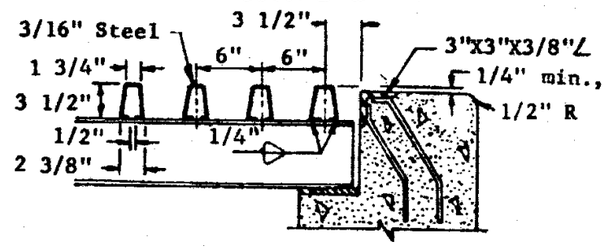

Λ TYPE TREADS

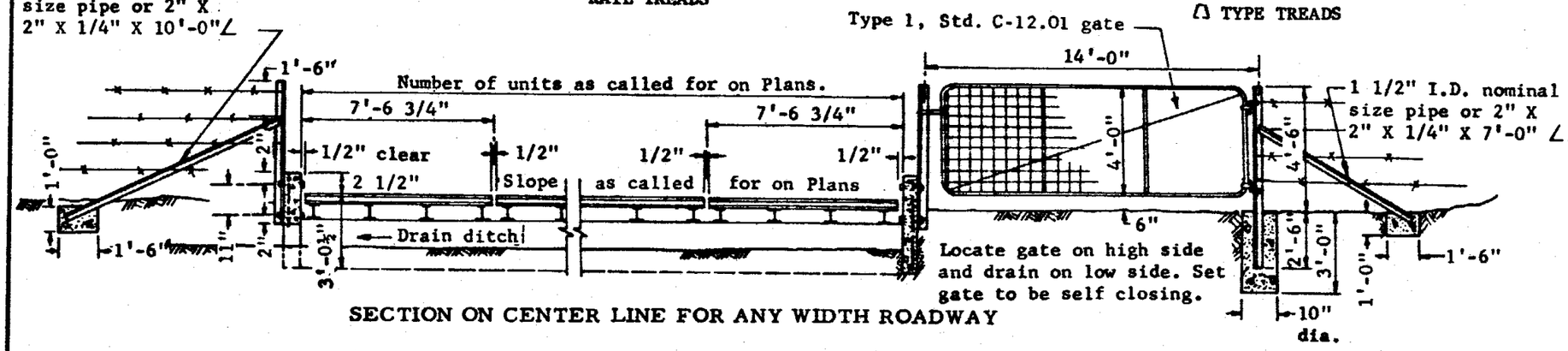

SECTION ON CENTER LINE FOR ANY WIDTH ROADWAY

MATERIAL LIST - CATTLE GUARD WITH GATE

Item	Pcs.	Size	Length	Steel#	Conc. C.Y.
Common to all guard lengths					
Post, Steel	3	See Std. C-12.01			
Braces, Steel	6	See Std. C-12.01			
Conc. for setting Post & Braces					0.17
Reinf. Bars	8	#4	11'-6"	61.50	
Reinf. Bars	8	#4	2'-9"	14.70	
7 Unit - 40' ROADWAY					17.42
Fabricated ∠	2	3"X3"X3/8"X52'-10"			
Web Belting	56	6"X6"X½"			
6 Unit - 34' ROADWAY					15.16
Fabricated ∠	2	3"X3"X3/8"X45'-3½"			
Web Belting	48	6"X6"X½"			
5 Unit - 26' ROADWAY					12.90
Fabricated ∠	2	3"X3"X3/8"X37'-9"			
Web Belting	40	6"X6"X½"			
4 Unit - 20' ROADWAY					10.64
Fabricated ∠	2	3"X3"X3/8"X30'-2½"			
Web Belting	32	6"X6"X½"			

Rails to be set 1/4" min. to 1/2" max. above top of concrete abutment.

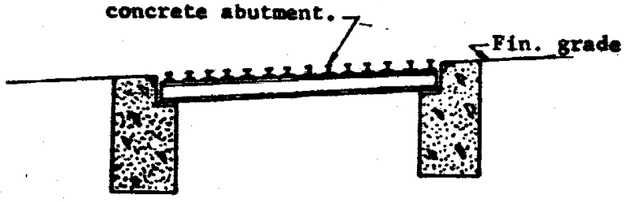

Section A-A showing relationship of top of concrete, and finished grade line.

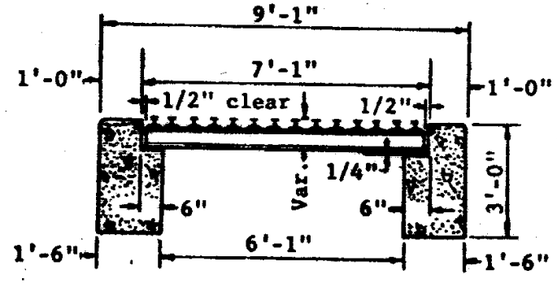

SECTION A-A

GENERAL NOTES

All concrete shall be Class A.

Used rails may be used providing they are clean, free from rust, of uniform cross section and weigh 25 lbs./ft. min.

All rails, structural steel, steel posts and braces shall be given one shop coat of No. 1 paint.

ARIZONA HIGHWAY DEPARTMENT
PLANS DIVISION

CATTLE GUARD

Drawn	12-58	Drawing No.
Traced	S.L.T. 5-67	C-11.01
Checked	J.P.O. 5-68	
Approved Engr. Plans	5-68	

Rev 12-5-68

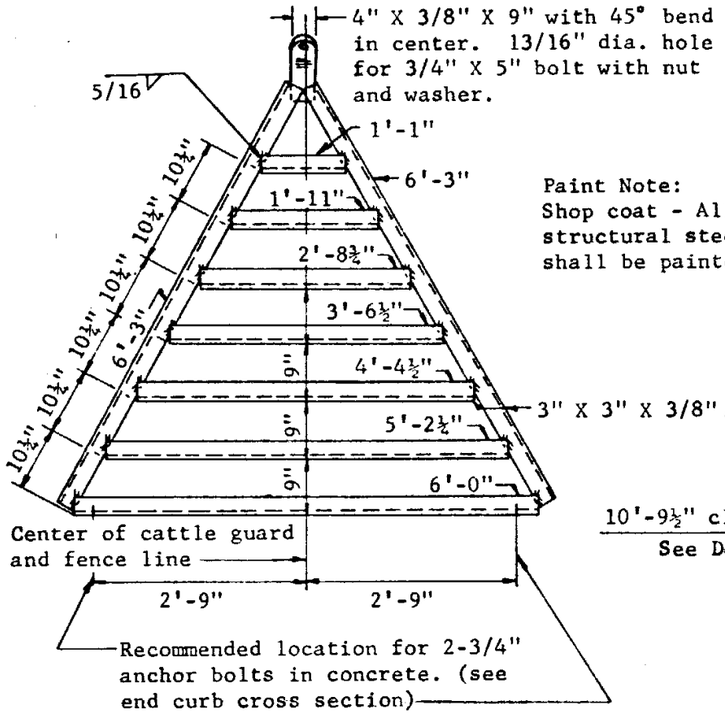

WELDED ANGLE END FRAME
2-required (one at each end)

Paint Note:
Shop coat - All rails, end frames, structural steel and steel posts shall be painted one coat Paint No. 1.

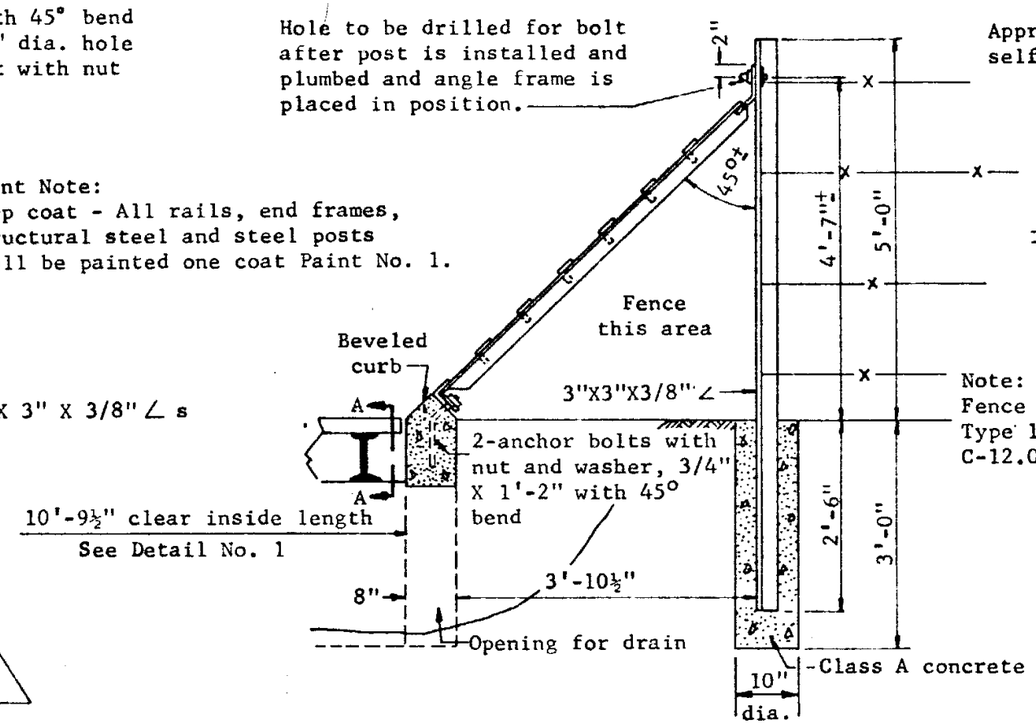

END CURB CROSS SECTION

Note:
Fence posts, braces and Type 1 Gate as per Std. C-12.01.

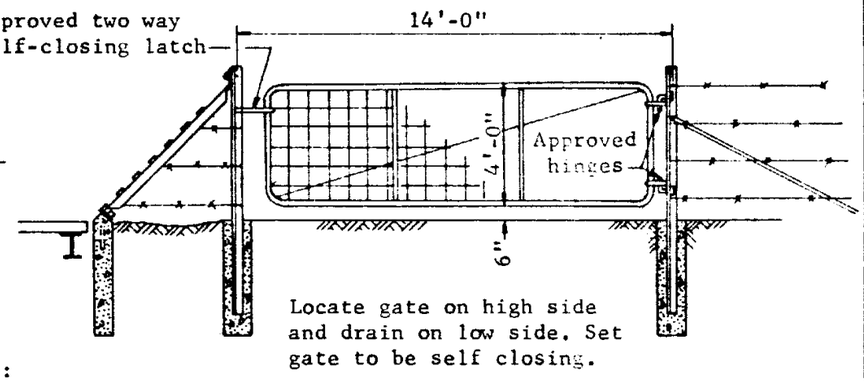

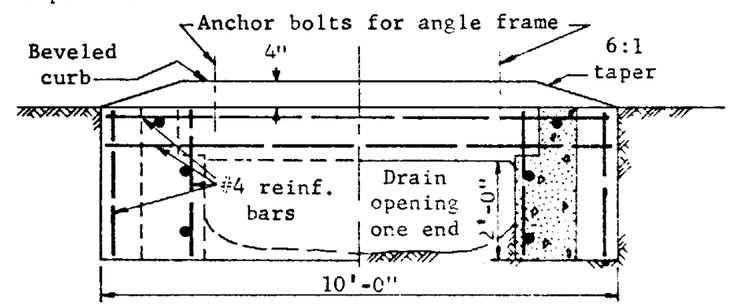

HALF END VIEW (Closed end)

HALF END SECTION (Looking toward open end)

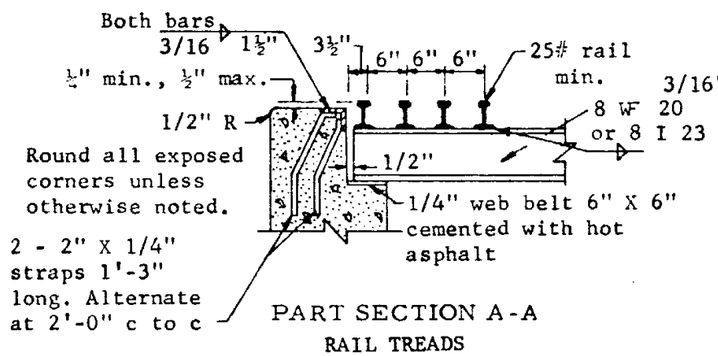

PART SECTION A-A
RAIL TREADS

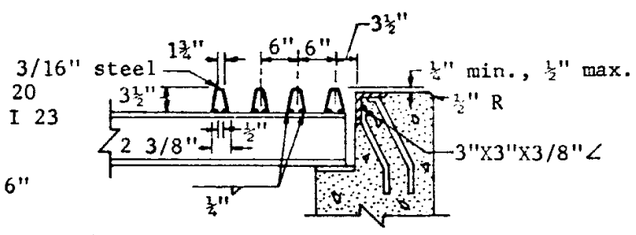

PART SECTION A-A
TYPE TREADS

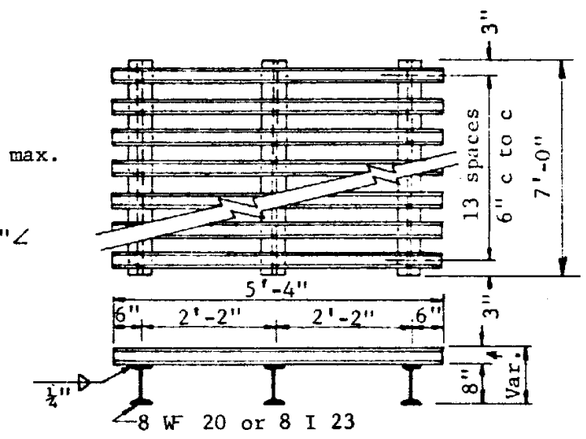

DETAIL OF WELDED GRILLE UNIT

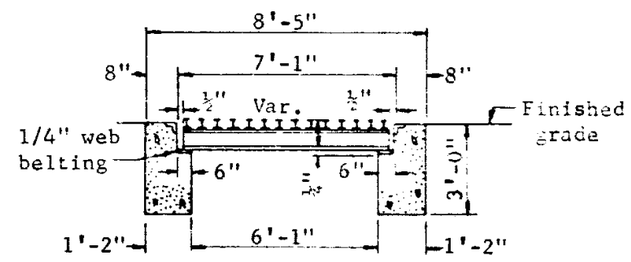

Top of concrete to conform with grade line.

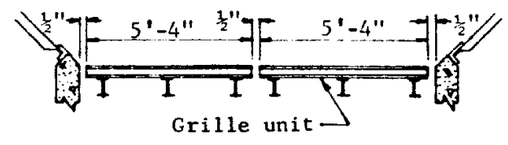

DETAIL NO. 1

MATERIAL LIST	Req'd.	
Fabricated ∠	2	3" X 3" X 3/8" X 10'-9 1/2"
Posts, for fence or gate	3	Same as Std. C-12.01 except as noted.
Bolts, with nut & washers	2	3/4" X 5" straight
Bolts, with nut & washers	4	3/4" X 1'-2", 45 bend mid point (anchor bolts)
Gate, with hinges & latch	1	Type 1 Gate for 14' opening, see Detail
Reinforcing bars	4	#4 bars X 8'-2" straight, aggregate weight, 22 lbs.
Reinforcing bars	8	#4 bars X 2'-10" straight, aggregate weight, 15 lbs.
Reinforcing bars	6	#4 bars X 11'-9" straight, aggregate weight, 47 lbs.
Std. welded grille unit	2	Approximate weight 2200 lbs.
Welded angle end frame	2	Approximate weight 560 lbs.
Web belting, grille shims	12	6" X 6" X 1/4".
Concrete	-	Class A. Total cubic yards 3.96 incl's setting 3 posts.

ARIZONA HIGHWAY DEPARTMENT
PLANS DIVISION

Rev

CATTLE GUARD - RANCH

FOR SIDEROAD ONLY

Drawn	L.D. 5-54	Drawing No.
Traced	S.L.T. 8-67	C-11.02
Checked	J.P.O. JPO 5-68	
Approved Engr. Plans	G Weidecker 5-68	

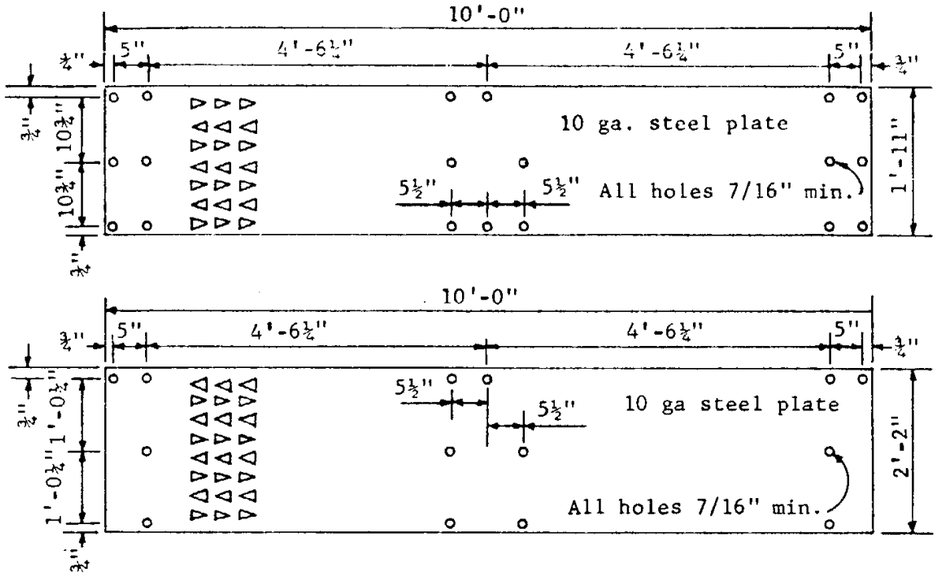

PLAN - 23" & 26" CATTLE GUARD PLATE

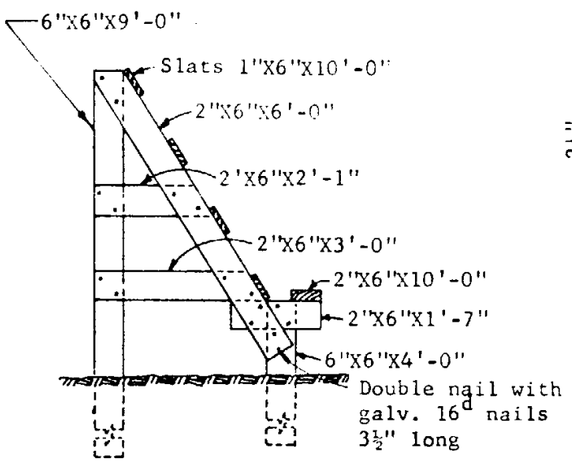

END FRAME TIMBER SIZES

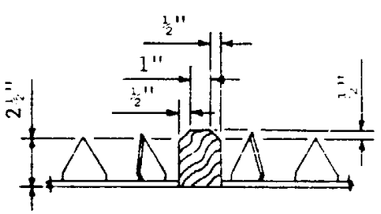

DETAIL-2" X 3" TIMBER BETWEEN ADJACENT PLATES

Fasten down with 3 -3/8" X 7" lag screws each piece

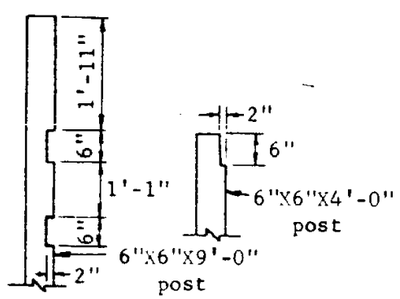

END FRAME POST NOTCH DETAIL

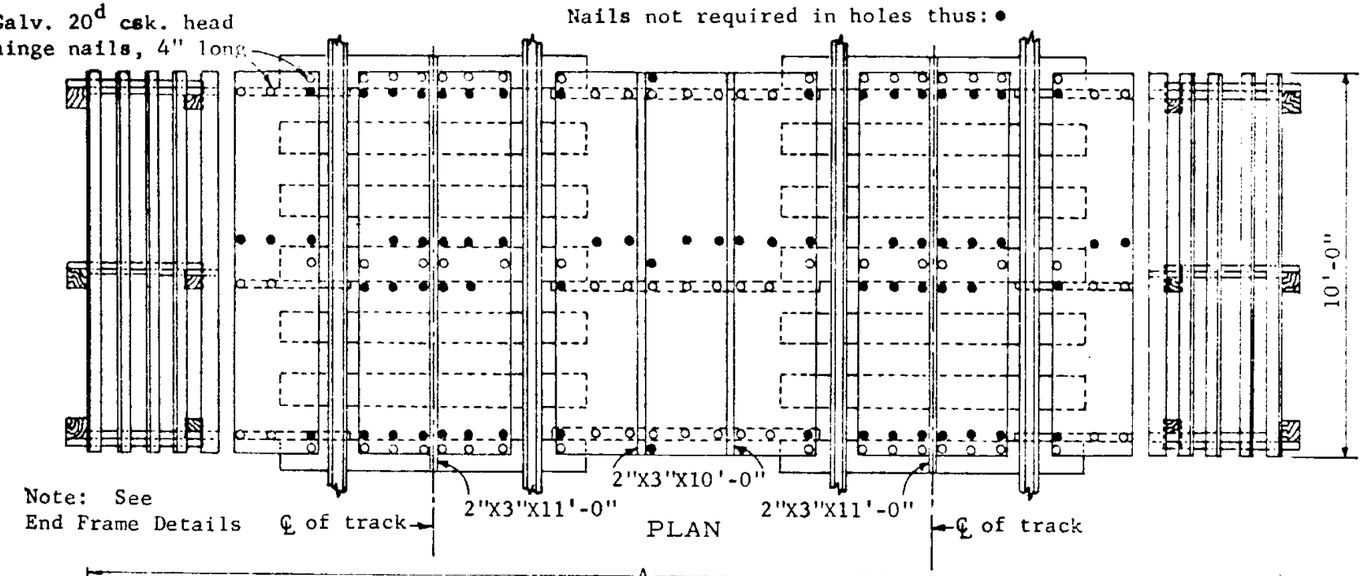

PLAN

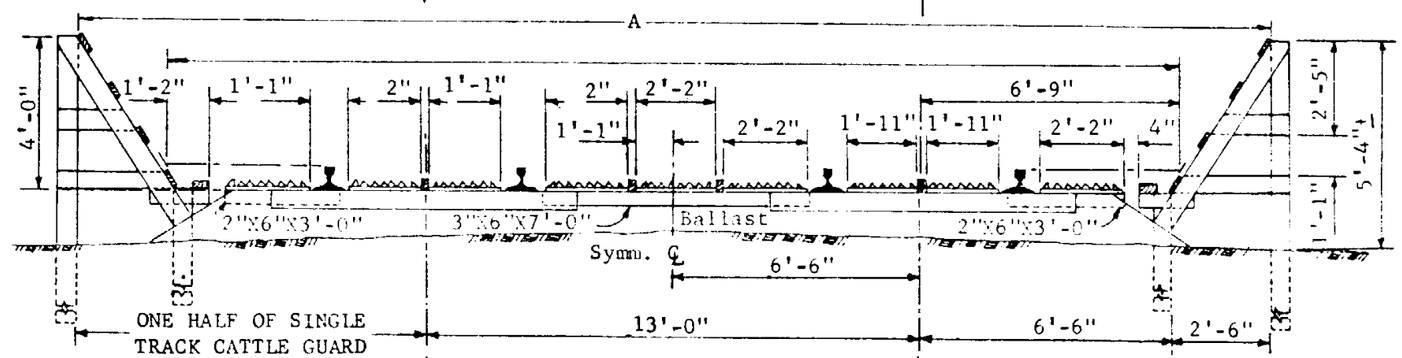

ELEVATION

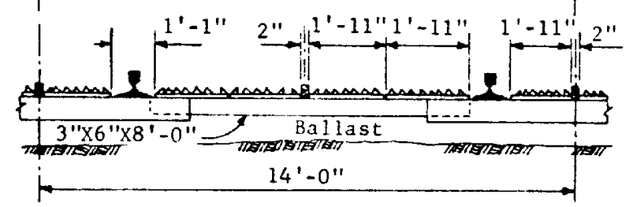

ELEVATION

GENERAL NOTES

The 2" X 6" & 3" X 6" timbers that are fastened to the ties and the 6" X 6" posts shall be pressure treated, rough and unpainted. The remaining timber shall be given one coat of No. 7 and one coat of No. 8 paint.

The metal plates shall be furnished with the manufacturer's shop coat of paint or shall be given one coat of No. 1 paint.

DIMENSIONS	A	B
Single Track	18'-0"	13'-6"
13' Track Centers	31'-0"	26'-6"
14' Track Centers	32'-0"	27'-6"

ARIZONA HIGHWAY DEPARTMENT
PLANS DIVISION

Rev

CATTLE GUARD RAILROAD

Drawn	D.G. 3-67	Drawing No.
Traced	S.L.T. 4-67	
Checked	J.P.O. JPO 5-68	C-11.03
Approved Engr. Plans	[signature] 5-68	

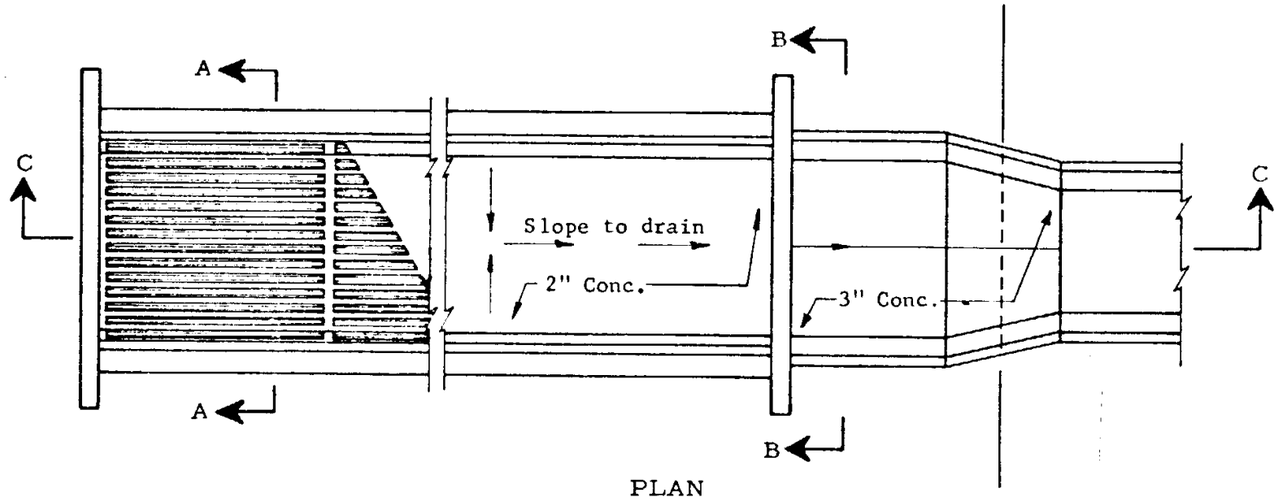

PLAN

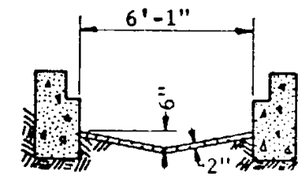

SECTION A-A

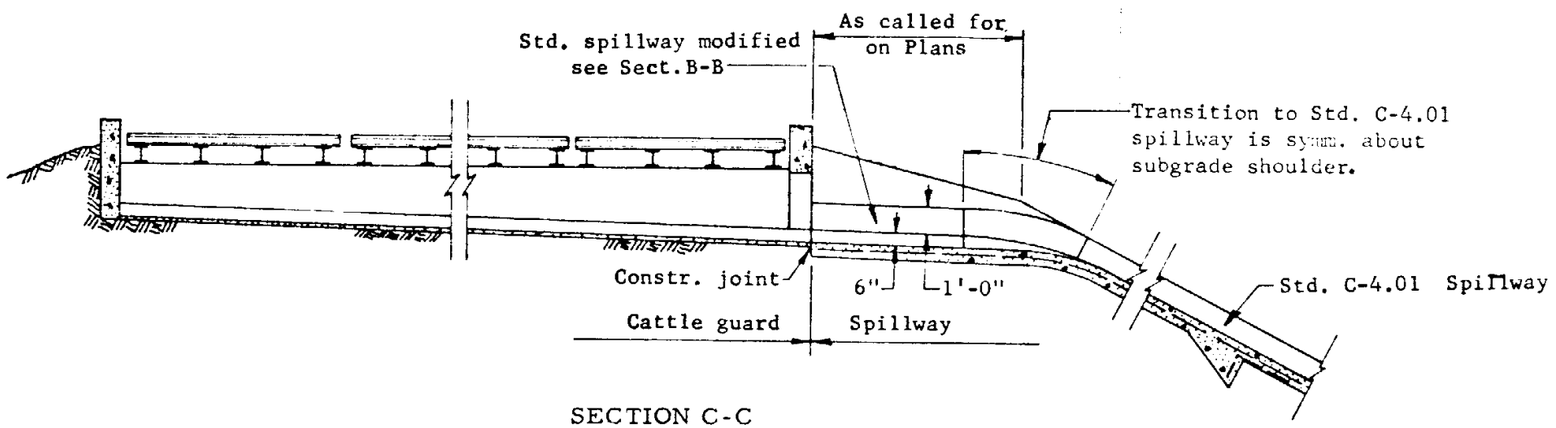

SECTION C-C
IN EMBANKMENT

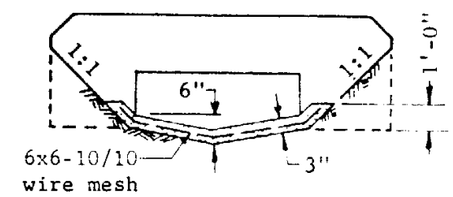

SECTION B-B

GENERAL NOTES

For all other cattle guard details, see Std. C-11.01.

This standard shall be used in embankment or where highly erodable soil is found.

All concrete shall be Class A.

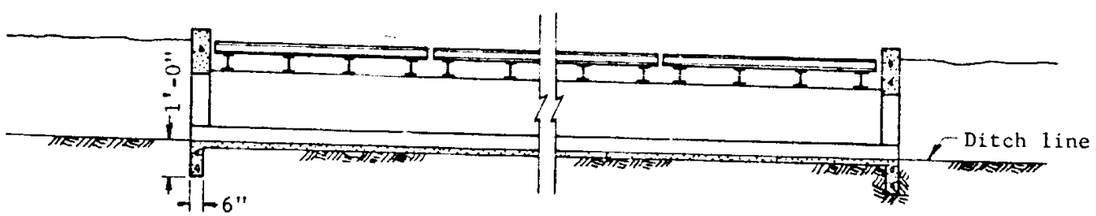

SECTION C-C

WHERE USED FOR THRU DRAINAGE-
CATTLE GUARD OPEN BOTH ENDS

ARIZONA HIGHWAY DEPARTMENT
PLANS DIVISION

Rev 12-2-68

CATTLE GUARD DRAINAGE

Drawn	M.C.T. 6-15-65	Drawing No.
Traced	R.A.F. 5-5-67	
Checked	J.P.O. JPO 5-68	C-11.04
Approved Engr. Plans	[illegible] 5-68	

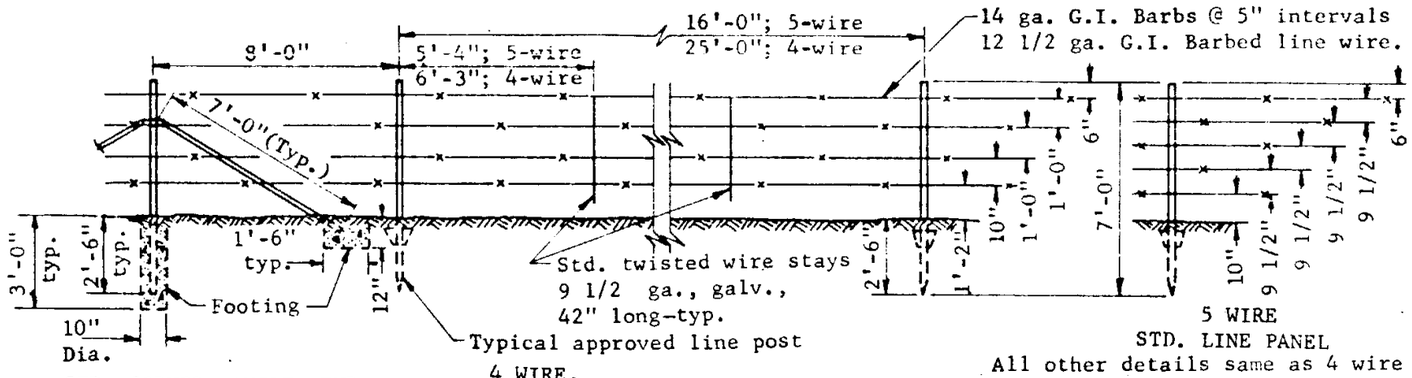

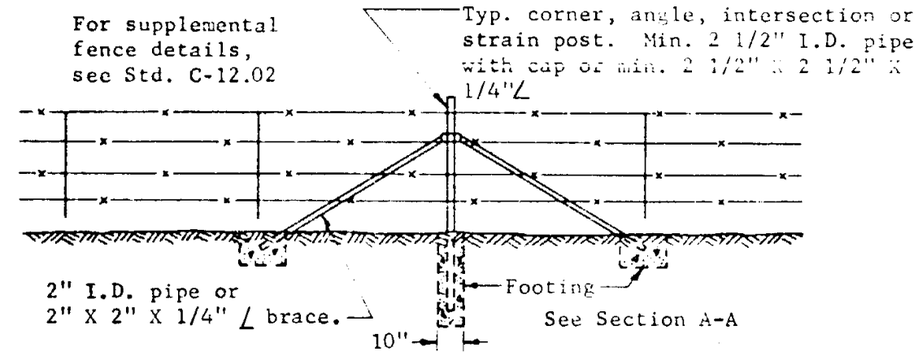

STANDARD STRAIN POST
To be spaced @ 650' max. intervals.

Wire shall be strung on opposite side of post from highway except on curves as shown.
No portion of fence shall extend outside of highway right of way line.

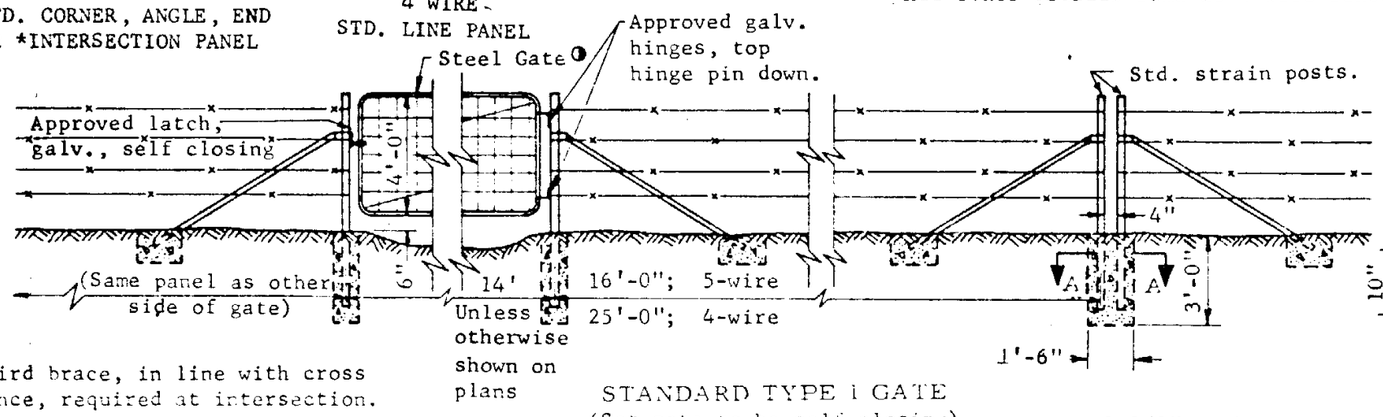

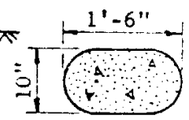

SECTION A-A

* Third brace, in line with cross fence, required at intersection.

STANDARD TYPE 1 GATE
(Set gate to be self-closing)

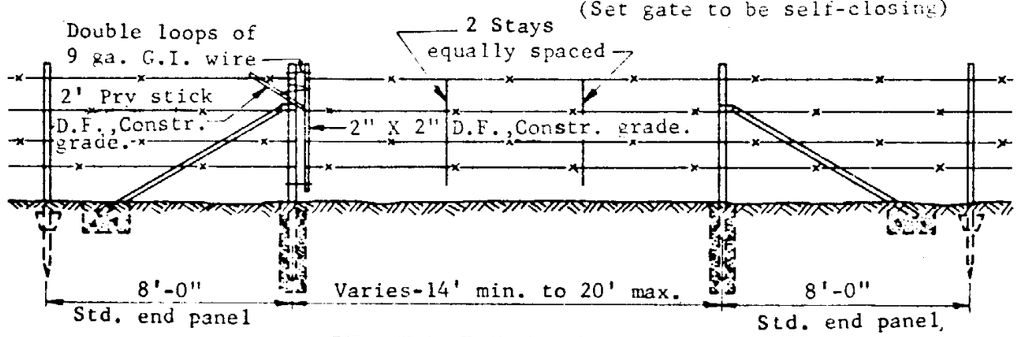

STANDARD TYPE 2 GATE

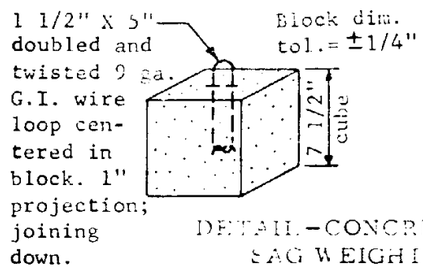

DETAIL-CONCRETE
SAG WEIGHT

Note:
When tubular post hangers and/or latches are used, hangers and/or latches shall be drilled for a single 3/32" Ø min. drive pin to prevent rotation of the hangers and latches.

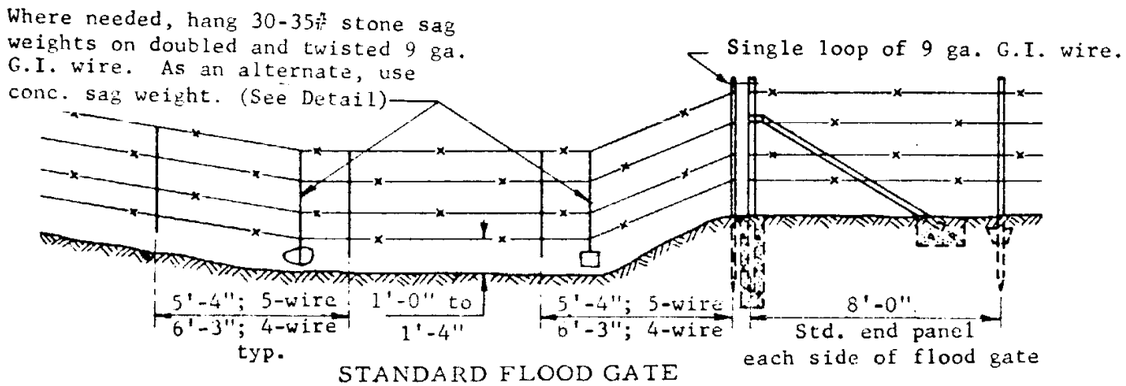

STANDARD FLOOD GATE
Length is Variable

TYPICAL STEEL LINE
POST SECTIONS

◐ 1 3/8" ø tubing - 2 vert. braces. Mesh □, △, ◇ - 11 ga. line wires - 12 1/2 ga. crosswires. 1 - adjustable diagonal guy. Fully galvanized.

GENERAL NOTES

Posts and braces shall be green in color. Posts may have white top. Wood parts of type 2 gate shall be unpainted.

Line posts shall be "T", "U", "Rail", "Hat", or similar production sections except "Ells" or "Angles; shall weigh, exclusive of anchor, a min. of 1.3 #/ft. and shall be punched, knobbed or corrugated to hold wire firmly in position. Clamps of min. 11 ga. galv. wire shall be used to attach fence. Punched, lug type fasteners are not permitted.

Where anchor is omitted or post hole is drilled, posts must be set in concrete.

There may be a max. of two splices between strain posts but not on the same wire and no splice shall be placed within 100' of a strain, corner or gate post.

Post spacing shall be measured along top wire.

Angle is any deflection greater than 15°

All concrete shall be Class A.

ARIZONA HIGHWAY DEPARTMENT PLANS DIVISION		Rev 12-5-68
LINE FENCE AND GATES STEEL POSTS		
Drawn	K. S. 6-1938	Drawing No.
Traced	R.A.F 3-7-67	
Checked	J.P.O. JPO 5-68	C-12.01
Approved Engr. Plans	[signature] 5-68	

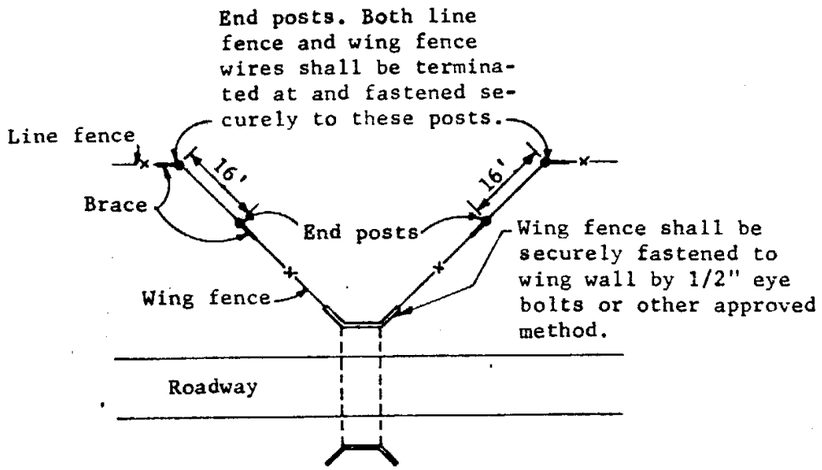

WING FENCE DETAIL

This detail shall be used where wing fences are called for on plans.

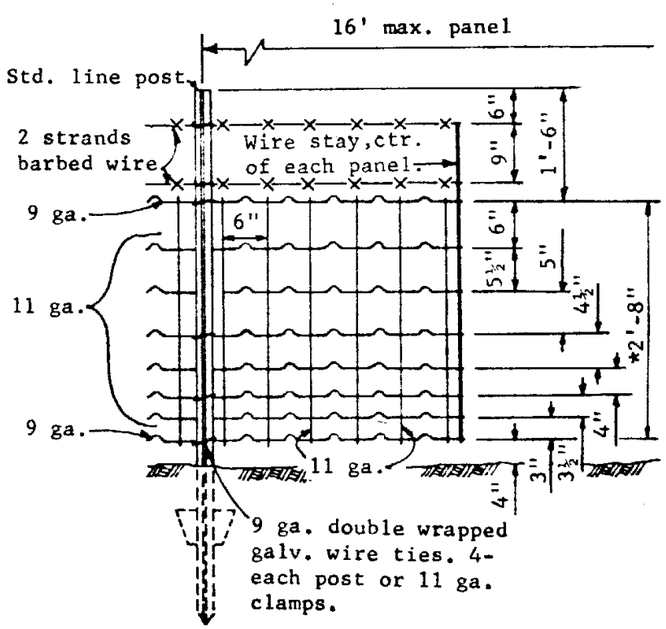

STOCK FENCE

*Rectangular mesh galv. stock fence.

WOOD POST FENCE-TYPE 1 or 2 GATE-4 or 5 WIRE

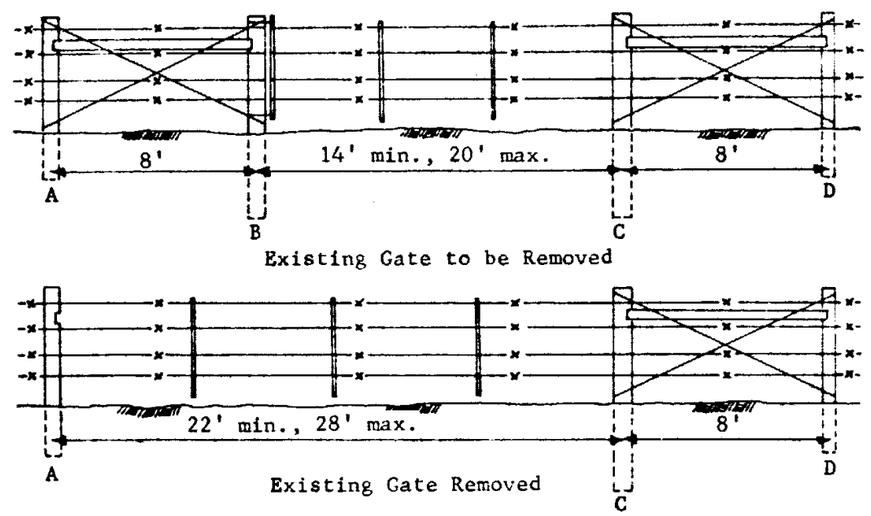

STD. C-12.01 FENCE-TYPE 1 or 2 GATE-4 or 5 WIRE

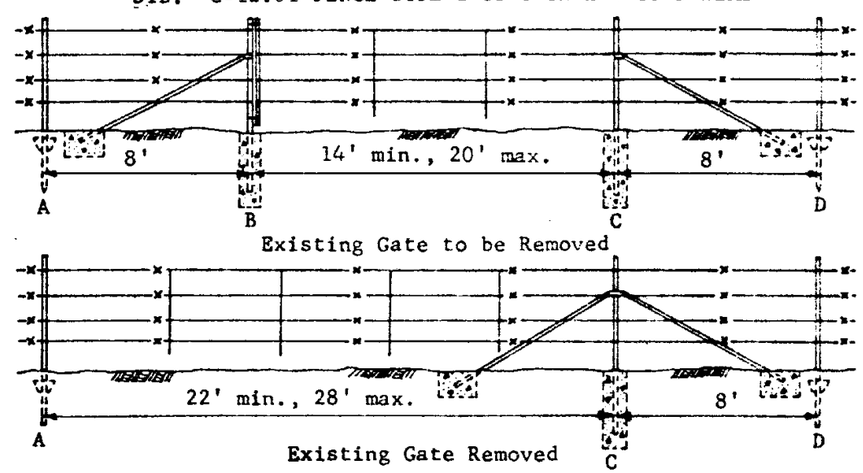

DETAIL FOR REMOVING EXISTING LINE GATES

Procedure: Remove gate and hardware and wire between posts A and C. Install new second brace at post C (Std. C-12.01 fence only). Stretch new wire between posts A and C. Remove post B and brace.
(Approved salvaged wire may be used.)
Staples for wood posts shall be 1 1/2" galvanized and fabricated from 9 gauge wire.

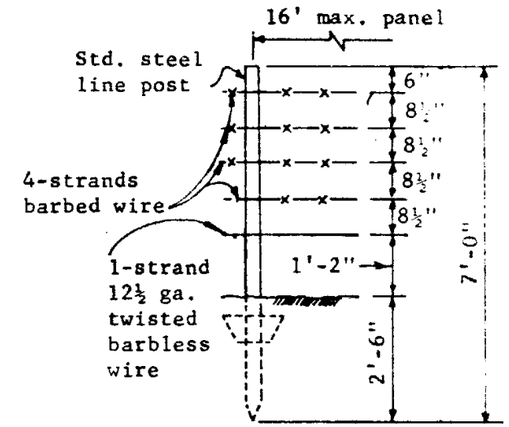

Drawn for 5-wire

GAME FENCE

4-wire game fence shall be constructed using standard 4-wire line fence post spacing and substituting 12 1/2 ga. twisted, barbless wire for the bottom strand.

GENERAL NOTES

For any details not shown on this sheet, refer to Std. C-12.01

ARIZONA HIGHWAY DEPARTMENT PLANS DIVISION		Rev 11-14-68
SUPPLEMENTAL FENCE DETAILS		
Drawn	LOM, KS, [illegible]	Drawing No.
Traced	D.G. 3-[illegible]	C-12.02
Checked	J.P.O. [illegible] 5-68	
Approved Engr. Plans	[illegible] 5-68	

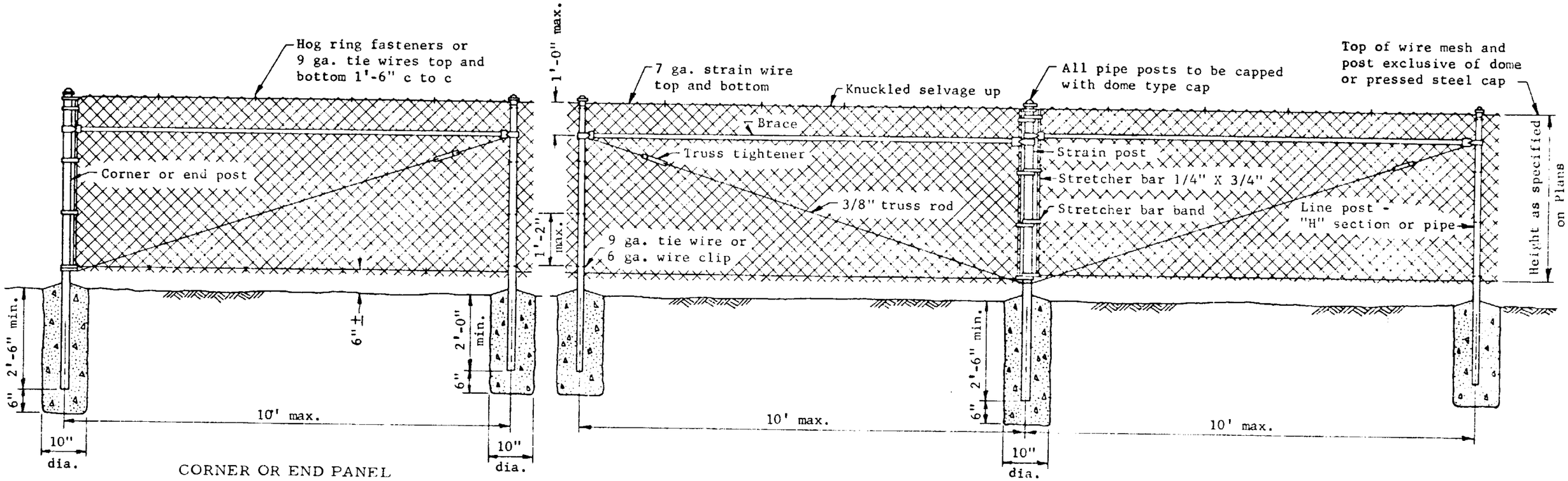

CORNER OR END PANEL

STRAIN PANEL

To be spaced at 500' maximum intervals

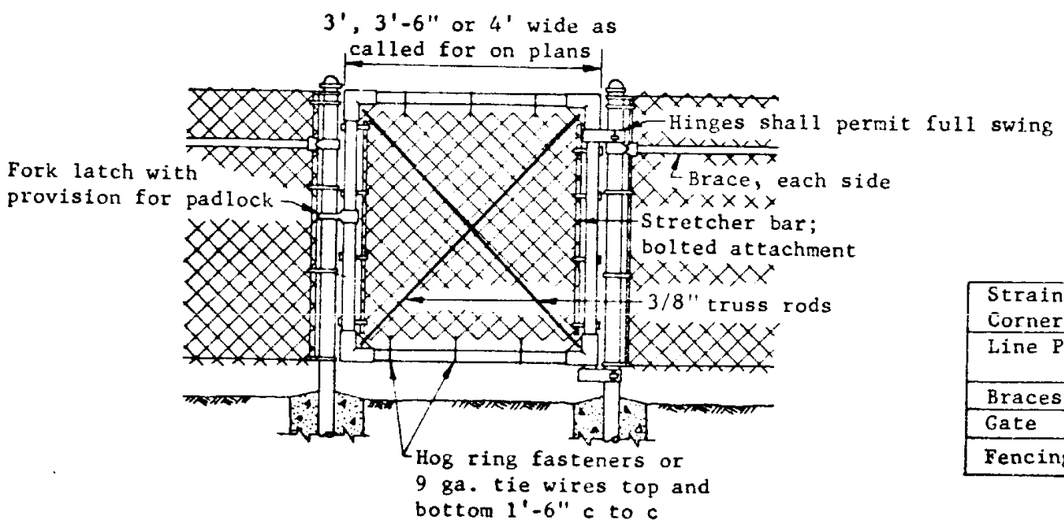

WALK GATE

GENERAL NOTES

All concrete shall be Class A.

Gates shall be of welded or malleable cast or pressed steel fitting construction.

Fittings not specifically detailed shall be of approved heavy duty design.

"H" Section posts shall be capped with pressed steel top.

Strain, End & Corner Posts	2" I.D. Nominal size pipe
Line Posts	1 1/2" I.D. Nominal size pipe "H" Sec. 1 7/8" X 1 5/8" Nominal size
Braces	1 1/4" I.D. Nominal size pipe
Gate	1 1/2" I.D. Nominal size pipe
Fencing	9 ga., 2" mesh fabricated wire

ARIZONA HIGHWAY DEPARTMENT
PLANS DIVISION

Rev

FENCE
CHAIN LINK

Drawn	L.O.M. 2-58	Drawing No.
Traced	R.A.F. 11-67	
Checked	J.P.O. JPO 5-68	C-12.03
Approved Engr. Plans	[illegible] 5-68	

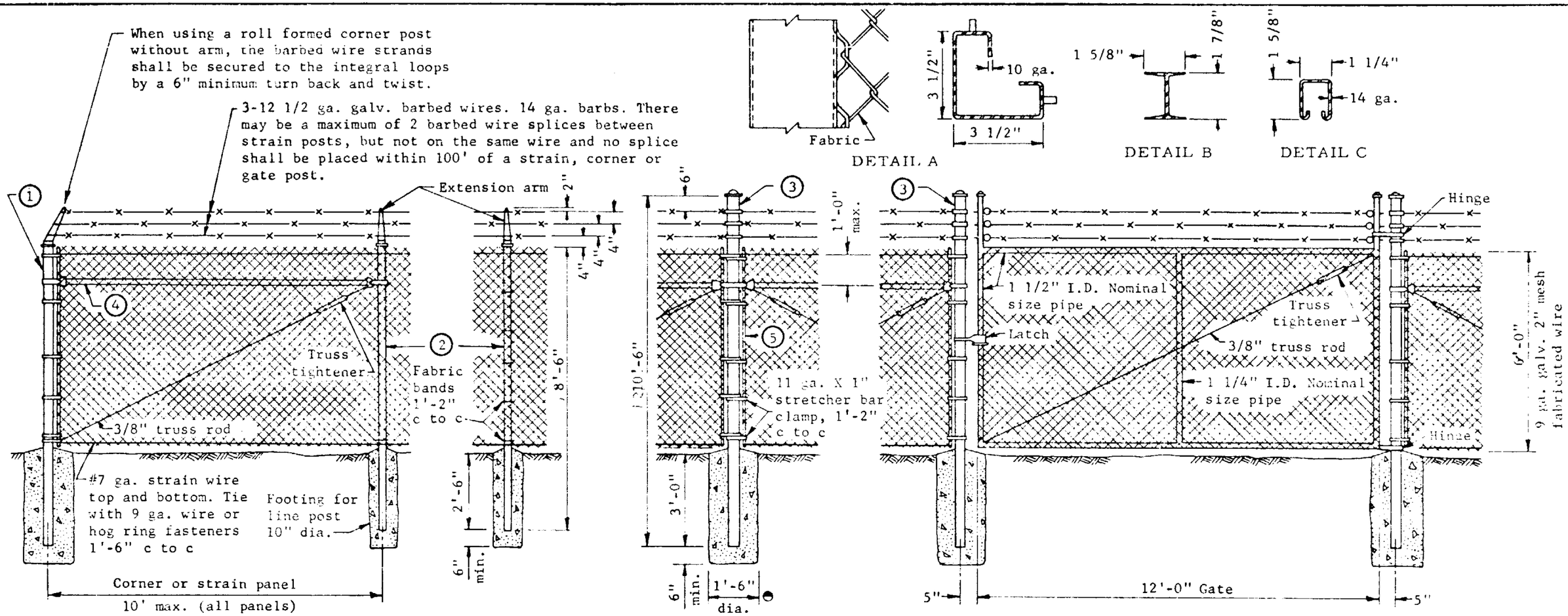

Footing for Strain, End, Corner and Gate Posts

Note: For Walk Gate, see Std. C-12.03.

Fencing shall be 9 ga., 2" mesh, fabricated wire.

Fence Using Pipe Members			
	Member	Size	Lgth.
1	Corner post	3 1/2" I.D. nominal pipe size	9'-0"
2	Line post	1 1/2" I.D. nominal pipe size	8'-6"
3	Strain or gate post	3 1/2" I.D. nominal pipe size	10'-6"
4	Brace	1 1/4" I.D. nominal pipe size	as req'd.
5	Stretcher bar	1/4" x 3/4" flat	6'-2"
Fence Using Roll Formed Members			
1	Corner post	5.14# /ft. section with integral fabric loops per Detail A or equal	9'-0"
2	Line post	2.72# /ft. section per Detail B or equal	8'-6"
3	Strain or gate post	3 1/2" I.D. nominal pipe size	10'-6"
4	Brace	1.35# /ft. section per Detail C or equal	as req'd.
5	*Stretcher bar	1/4" X 3/4" flat	6'-2"

* Not used with corner post having integral fabric loops. (See Detail A)

GENERAL NOTES

All concrete shall be Class A.

Gates shall be of welded or malleable cast or pressed steel fitting construction.

Fittings not specifically detailed shall be of approved heavy duty design.

Strain posts shall be spaced at 500' maximum intervals and both corner and strain posts shall have strain panels each side.

All pipe posts shall be capped.

ARIZONA HIGHWAY DEPARTMENT
PLANS DIVISION

Rev

FENCE-INDUSTRIAL TYPE, FABRICATED WIRE

Drawn	L.O.M. 3-65	Drawing No.
Traced	R.A.F. 1-68	C-12.04
Checked	J.P.O. 5-68	
Approved Engr. Plans	5-68	

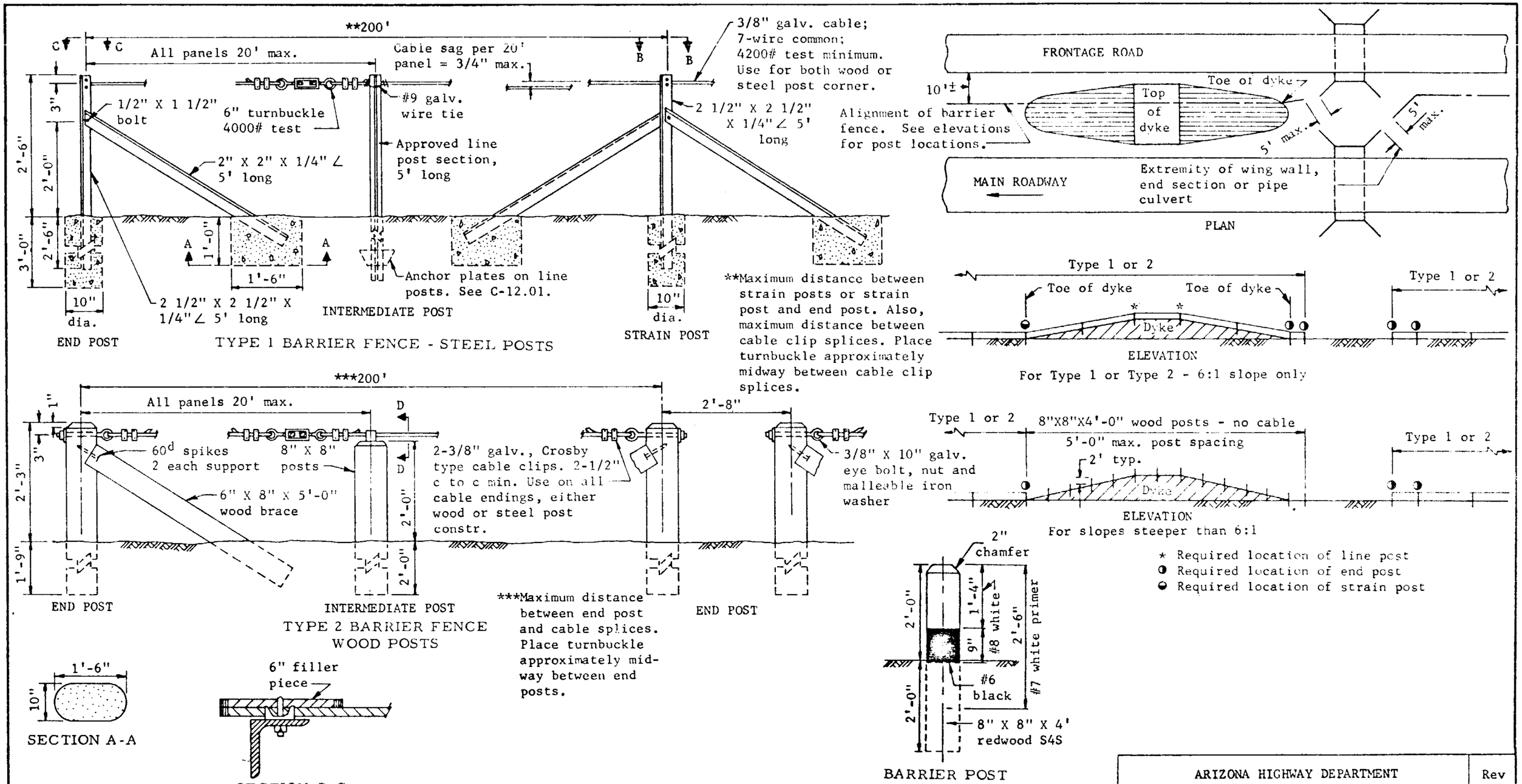

TYPE 1 BARRIER FENCE - STEEL POSTS

TYPE 2 BARRIER FENCE WOOD POSTS

BARRIER POST

SECTION A-A

SECTION C-C

SECTION B-B

SECTION D-D

GENERAL NOTES

All concrete shall be Class A.

Wood posts for barrier fence shall be rough, pressure treated.

Steel posts for barrier fence shall be painted green with white tops.

Barrier posts shall be S4S redwood, untreated.

All cable ends shall be wrapped with galvanized tie wire in accordance with the cable manufacturer's recommendations.

Barrier fence shall be used only to prevent crossings between roadways and shall not be used where guard rail is required or where physical barriers are present.

ARIZONA HIGHWAY DEPARTMENT PLANS DIVISION			Rev
BARRIER FENCE AND BARRIER POST			
Drawn	D.G. 10-66	Drawing No.	
Traced	S.L.T. 10-67		
Checked	J.P.O. JPO 5-68	C-12.05	
Approved Engr. Plans	G Heidecker 5-68		

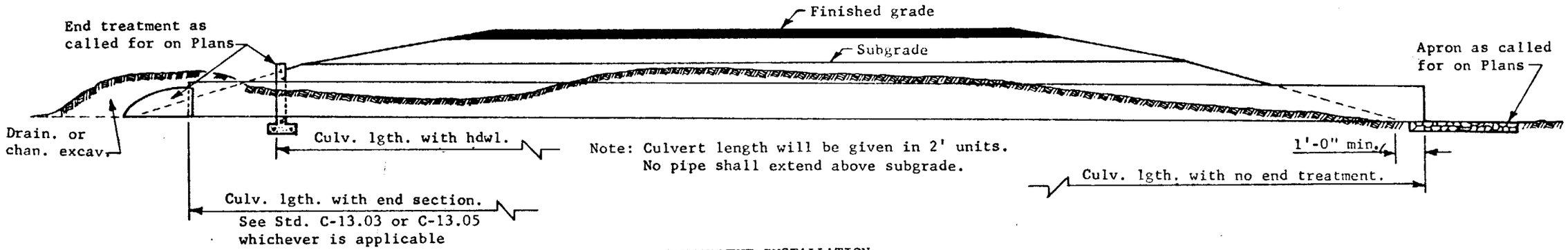

EMBANKMENT INSTALLATION

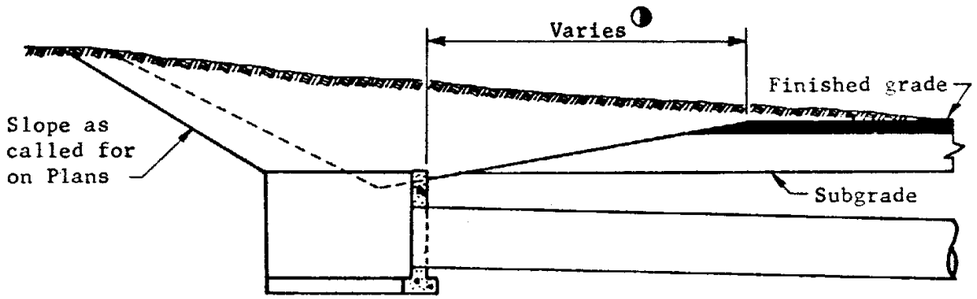

CUT INSTALLATION

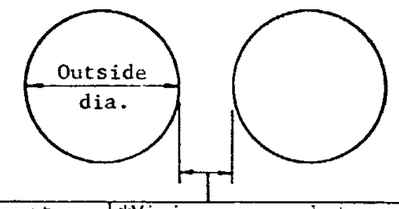

Diameter	*Minimum space between pipes
12" to 24"	1'-0"
30" to 66"	One-half diameter of pipe
72" to 84"	3'-0"

*When headwalls are used, space as per headwall standard.

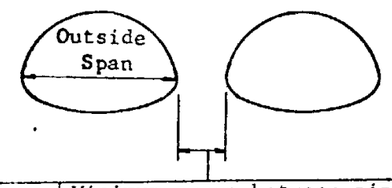

Span	Minimum space between pipe arches
18" to 36"	1'-0"
43" to 72"	One-third span of pipe arch

SPACING FOR MULTIPLE INSTALLATIONS

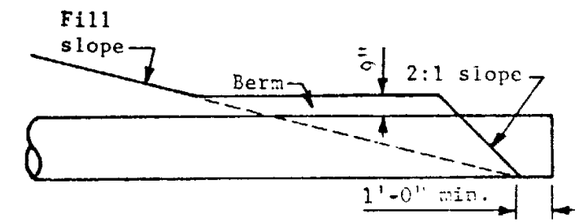

Side Elevation

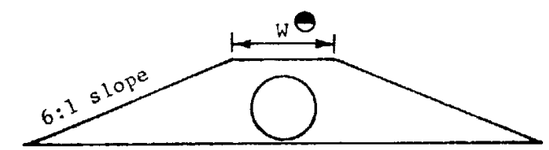

End Elevation

◓ W for outlet end = 4' + pipe dia.

Berm shall be constructed as noted on plans.

◑ Width of cut ditch minus 1'-0".

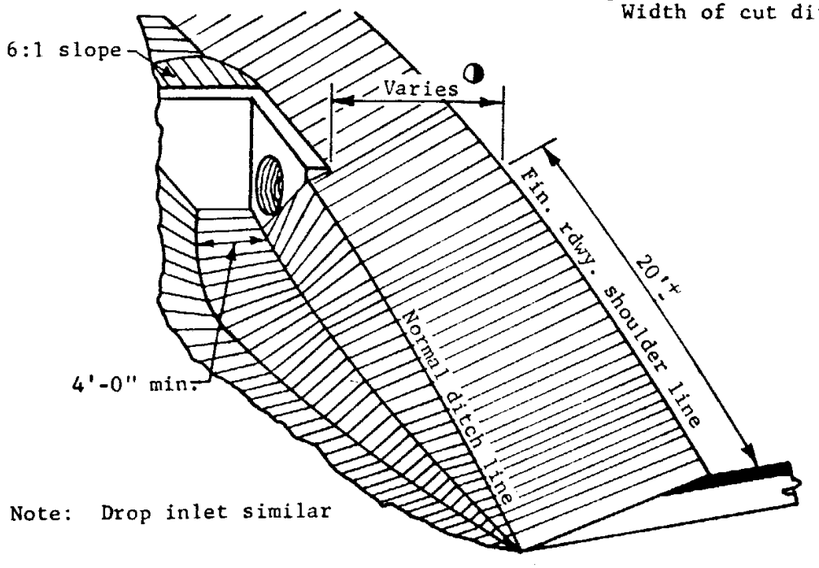

Note: Drop inlet similar

FIGURE A

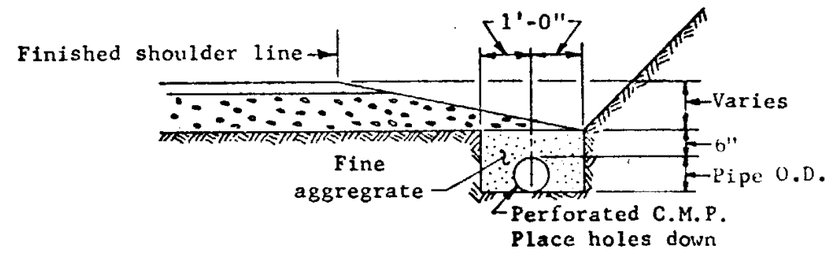

PERFORATED C.M.P. INSTALLATI

GENERAL NOTES

Additional excavation shall be required, as shown in Figure A, when headwalls are located in a cut ditch.

Headwall shall not extend more than 3" above the embankment slope and in no case above the shoulder elevation.

ARIZONA HIGHWAY DEPARTMENT PLANS DIVISION			Rev 12-2-68
PIPE CULVERT INSTALLATION			
Drawn	D.G. 3-68	Drawing No.	
Traced	D.G. 3-68	C-13.01	
Checked	J.P.O. 5-68		
Approved Engr. Plans	Heidecker 5-68		

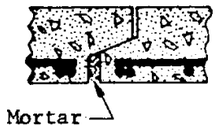

TONGUE AND GROOVE

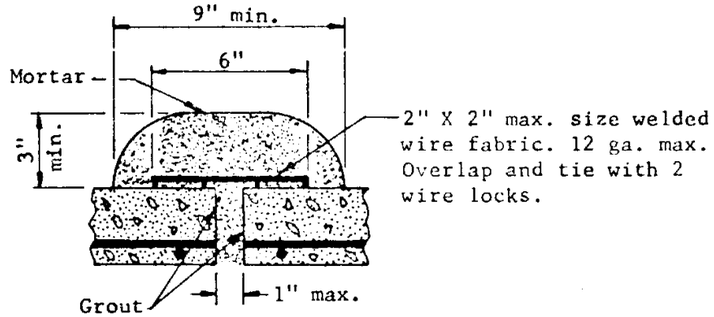

BUTT
(Broken ends)

MORTAR JOINTS

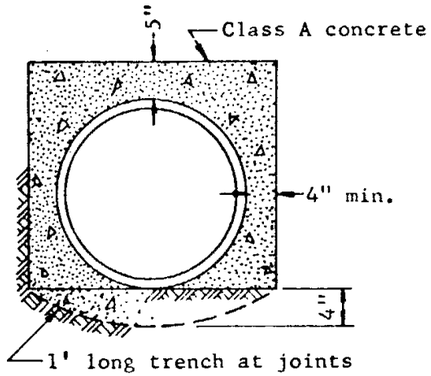

CONCRETE ENCASEMENT

GENERAL NOTES

Rubber gasketed joints shall be used on irrigation and storm sewer lines unless mortar joints are specified.

Cross drains with tongue and groove joints will not require external mortar bands.

For minimum cover and maximum fill heights on concrete pipes, refer to Std. C-13.03.

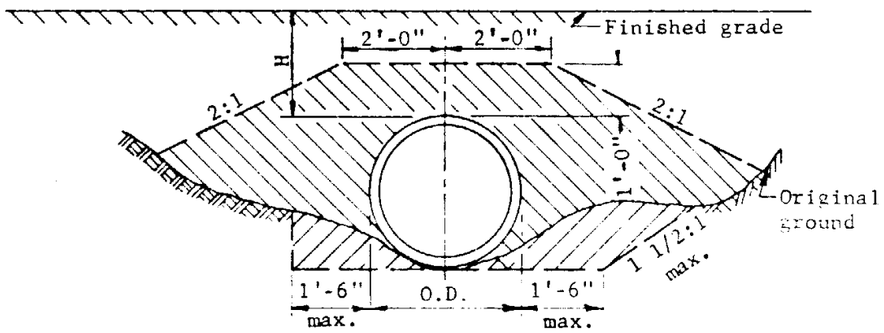

TYPE 1 - POSITIVE PROJECTING

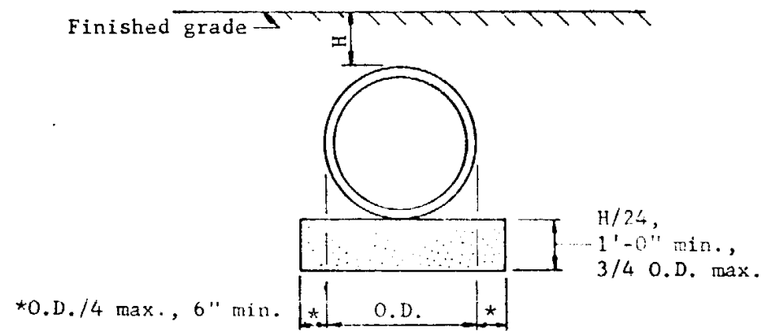

SOLID ROCK OR OTHER
UNYIELDING MATERIAL

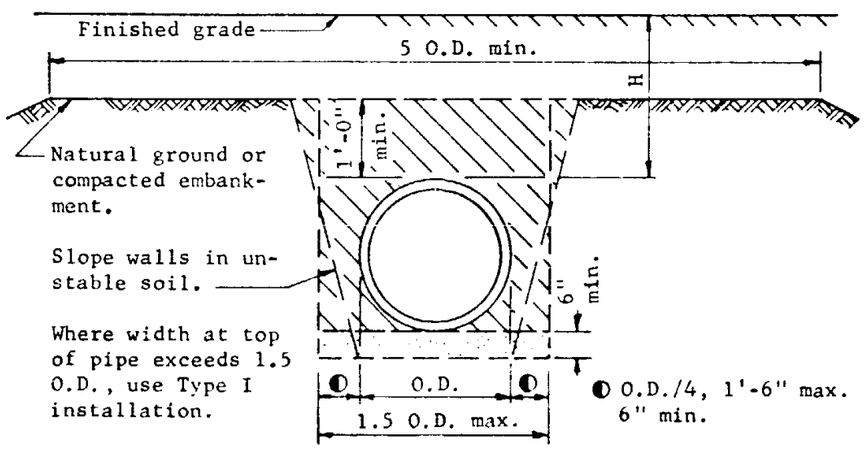

TYPE 2 - NEGATIVE PROJECTING

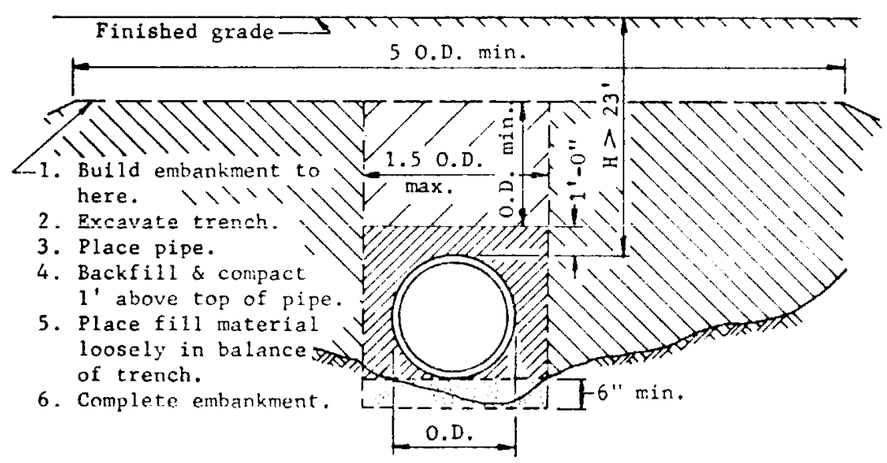

TYPE 3 - IMPERFECT TRENCH

ARIZONA HIGHWAY DEPARTMENT
PLANS DIVISION

Rev 12-9-68

REINFORCED CONCRETE PIPE PLACEMENT

Drawn	R.E.W.	3-58	Drawing No.
Traced	S.L.T.	7-67	
Checked	J.P.O.	JPO 5-68	C-13.02
Approved Engr. Plans	[illegible] 5-68		

HORIZONTAL ELLIPTICAL PIPE

Size	Area of Open'g	HE II Crack D Load 1000 Min.	HE II Type (1)	HE II Type (2)	HE III Crack D Load 1350 Min.	HE III Type (1)	HE III Type (2)	HE IV Crack D Load 2000 Min.	HE IV Type (1)	HE IV Type (2)
14 x 23	1.8				2	13	20	1	20	NL
19 x 30	3.3				2	13	15	1	20	NL
22 x 34	4.1				2	13	15	1	20	40
24 x 38	5.1	2	10	10	2	13	15	1	20	30
27 x 42	6.3	2	10	10	2	13	13	1	20	25
29 x 45	7.4	2	10	10	2	13	13	1	20	25
32 x 49	8.8	2	10	10	1	13	13	1	20	22
34 x 53	10.2	2	10	10	1	13	13	1	20	22
38 x 60	12.9	2	10	10	1	13	13	1	20	22
43 x 68	16.6	1	10	10	1	13	13	1	20	22
48 x 76	20.5	1	10	10	1	13	13	1	20	22
53 x 83	24.8	1	10	10	1	13	13	1	20	22
58 x 91	29.5	1	10	10	1	13	13	1	20	22
63 x 98	34.6	1	10	10	1	13	13	1	20	22
68 x106	40.1	1	10	10	1	13	13	1	20	22

VERTICAL ELLIPTICAL PIPE

Size	Area of Open'g	VE II Crack D Load 1000 Min.	VE II Type (1)	VE II Type (2)	VE III Crack D Load 1350 Min.	VE III Type (1)	VE III Type (2)	VE III Type (3)	VE IV Crack D Load 2000 Min.	VE IV Type (1)	VE IV Type (2)	VE IV Type (3)	VE V Crack D Load 3000 Min.	VE V Type (1)	VE V Type (2)	VE V Type (3)	VI Crack D Load 4000 Min.	VI Type (1)	VI Type (2)	VI Type (3)
45 x 29	7.4	2	15	15	2	23	40	88	1	35	NL	NL	1	NL	NL	NL	1	NL	NL	NL
49 x 32	8.8	2	15	15	2	18	30	78	1	28	NL	NL	1	NL	NL	NL	1	NL	NL	NL
53 x 34	10.2	2	15	15	2	18	25	70	1	27	NL	85	1	NL	NL	NL	1	NL	NL	NL
60 x 38	12.9	2	15	15	2	18	20	70	1	27	55	80	1	65	NL	NL	1	75	NL	NL
68 x 43	16.6	2	15	15	2	18	20	70	1	27	40	80	1	50	NL	NL	1	55	NL	NL
76 x 48	20.5	2	15	15	2	18	18	70	1	27	35	77	1	40	NL	NL				
83 x 53	24.8	2	15	15	2	18	18	70	1	27	30	77	1	35	NL	NL				
91 x 58	29.5	2	15	15	2	18	18	70	1	27	30	74								
98 x 63	34.6	2	15	15	2	18	18	70	1	27	30	74								
106 x 68	40.1	2	15	15	2	18	18	70	1	27	30	74								

NOTE: NL indicates no limit.

ROUND PIPE

Size	Area of Open'g	CLASS I Crack D Load 800 Min.	CLASS I Type (1)	CLASS I Type (2)	CLASS II Crack D Load 1000 Min.	CLASS II Type (1)	CLASS II Type (2)	CLASS III Crack D Load 1350 Min.	CLASS III Type (1)	CLASS III Type (2)	CLASS III Type (3)	CLASS IV Crack D Load 2000 Min.	CLASS IV Type (1)	CLASS IV Type (2)	CLASS IV Type (3)	CLASS V Crack D Load 3000 Min.	CLASS V Type (1)	CLASS V Type (2)	CLASS V Type (3)
12	0.8	3	8	9	3	11	14	3	40	NL	NL	2	NL	NL	NL	1	NL	NL	NL
15	1.2	3	8	9	3	11	14	3	30	NL	NL	2	60	NL	NL	1	NL	NL	NL
18	1.8	3	8	9	3	11	14	3	25	NL	NL	2	40	NL	NL	1	NL	NL	NL
21	2.4	3	8	9	3	11	14	2	20	30	44	1	30	NL	NL	1	NL	NL	NL
24	3.1	3	8	9	3	11	11	2	15	20	39	1	25	NL	NL	1	NL	NL	NL
30	4.9	3	8	9	3	11	11	2	15	20	35	1	23	NL	65	1	60	NL	NL
36	7.1	3	8	9	3	11	11	2	15	15	35	1	23	40	62	1	45	NL	NL
42	9.6	3	8	9	2	11	11	2	15	15	35	1	23	30	62	1	35	NL	NL
48	12.6	3	8	9	2	11	11	2	15	15	35	1	23	26	59	1	32	NL	100
54	15.9	3	8	9	2	11	11	2	15	15	35	1	23	24	59	1	32	60	95
60	19.6	3	8	9	2	11	11	2	15	15	35	1	23	23	57	1	32	48	90
66	23.8	3	8	9	2	11	11	2	15	15	35	1	23	23	57	1	32	47	85
72	28.3	3	8	9	2	11	11	2	15	15	35	1	23	23	57	1	32	43	85
78	33.2	3	8	9	2	11	11	2	15	15	35	1	23	23	57	1	32	43	85
84	38.5	3	8	9	2	11	11	2	15	15	35	1	23	23	57	1	32	43	85
90	44.2	3	8	9	2	11	11	2	15	15	34	1	23	23	56	1	32	43	85
96	50.3	3	8	9	2	11	11	2	15	15	33	1	23	23	54	1	32	43	80
102	56.7	3	8	9	2	11	11	2	15	15	31	1	23	23	52	1	32	43	80
108	63.6	3	8	9	2	11	11	2	15	15	30	1	23	23	50	1	32	43	80

GENERAL NOTES

All fill heights are measured in feet from finished grade to top of pipe.

Minimum fill heights shall be as noted except no pipe shall extend above subgrade.

For cases not covered hereon, special designs may be prepared.

Type refers to type of placement.

For other details see Std. C-13.02.

ARIZONA HIGHWAY DEPARTMENT
PLANS DIVISION

FILL HEIGHTS FOR REINFORCED CONCRETE PIPE

Drawn	J.P.O. 7-65	Drawing No.
Traced	S.L.T. 8-67	C-13.03
Checked	J.P.O. JPO 5-68	
Approved Engr. Plans	GWeidecker 5-68	

Rev

PIPE DIA.	APPROX. WEIGHT	DIMENSIONS - INCHES T	A	B	C	E	F	APPROX. SLOPE
24	1520#	3	9½	43½	30	73½	48	3
27	1930#	3¼	10½	49½	24	73½	54	3
30	2190#	3½	12	54	19¾	73¾	60	3
36	4100#	4	15	63	34¾	97¾	72	3
42	5380#	4½	21	63	35	98	78	3
48	6550#	5	24	72	26	98	84	3
54	8240#	5½	27	65	33¼	98¼	90	2½

GENERAL NOTES

Design of end section shall conform to standards for reinforced concrete pipe.

End section joint conformation shall match the pipe joints.

Embankment slope shall be warped to match slope of end section.

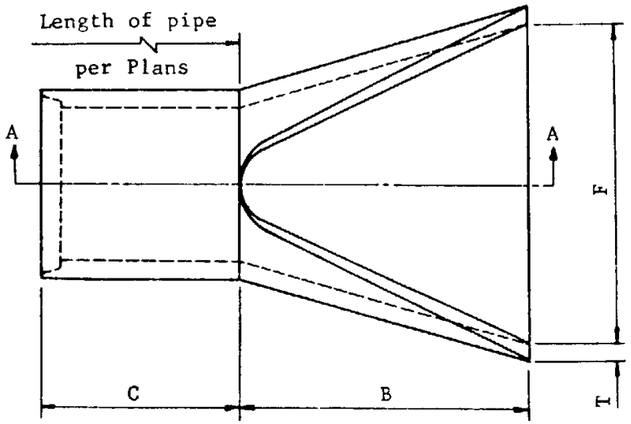

PLAN

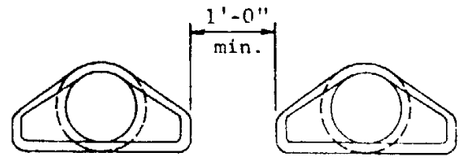

SPACING FOR MULTIPLE INSTALLATION

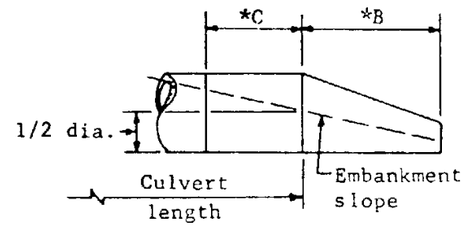

Right Angle Culvert

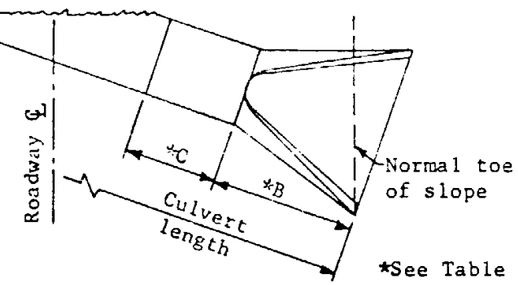

Skewed Culvert

CULVERT LENGTH AS SHOWN ON PLANS

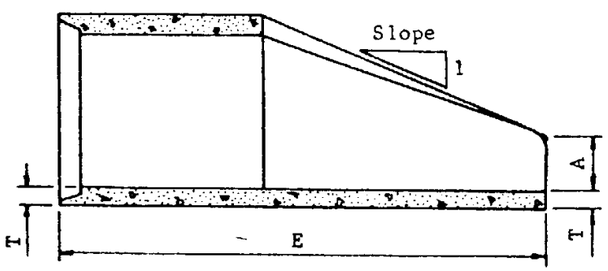

SECTION A-A

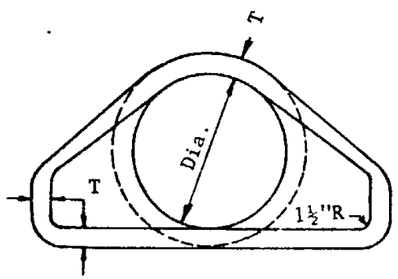

FRONT ELEVATION

ARIZONA HIGHWAY DEPARTMENT PLANS DIVISION			Rev
END SECTION REINFORCED CONCRETE PIPE			
Drawn	D.G. - 4-67	Drawing No.	
Traced	S.L.T. - 5-67		
Checked	J.P.O. JPO 5-68	C-13.04	
Approved Engr. Plans	G Weidecker 5-68		

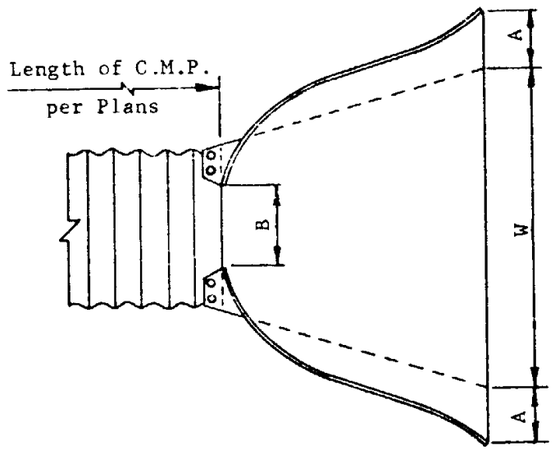

PIPE DIA.	GA.	DIMENSIONS - INCHES A ±1	B Max.	H ±1	L ±1½	W ±2	APPROX. SLOPE	CONNECTION TYPE
18"	16	8	10	6	31	36	2 1/2	1,2,3,4
24	16	10	13	6	41	48	2 1/2	1,2,3,4
30	14	12	16	8	51	60	2 1/2	1,2,4
36	14	14	19	9	60	72	2 1/2	1,2,4
42	12	16	22	11	69	84	2 1/2	1
48	12	18	27	12	78	90	2 1/4	1
54	12	18	30	12	84	102	2	1
60	12,10	18	33	12	87	114	1 3/4	1
66	12,10	18	36	12	87	120	1 1/2	1
72	12,10	18	39	12	87	126	1 1/3	1
78	12,10	18	42	12	87	132	1 1/4	1
84	12,10	18	45	12	87	138	1 1/6	1

PIPE ARCH SPAN	RISE	GA.	DIMENSIONS - INCHES A ±1	B Max.	H ±1	L ±1½	W ±2	APPROX. SLOPE	CONNECTION TYPE
29	18	16	9	14	6	32	46	2 1/2	1,2,3,4
36	22	14	10	16	6	39	60	2 1/2	1,2,4
43	27	14	12	18	8	46	75	2 1/2	1,2,4
50	31	12	13	21	9	53	85	2 1/2	1
58	36	12	18	26	12	63	90	2 1/2	1
65	40	12	18	30	12	70	102	2 1/2	1
72	44	12	18	33	12	77	114	2 1/4	1

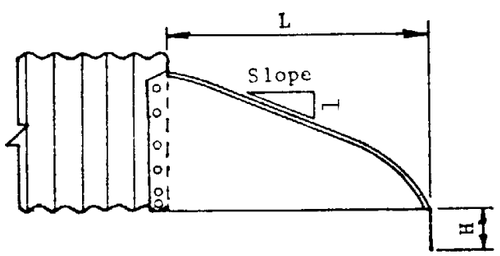

END SECTION DIMENSIONS
Showing Type 1 Riveted or Bolted Connections

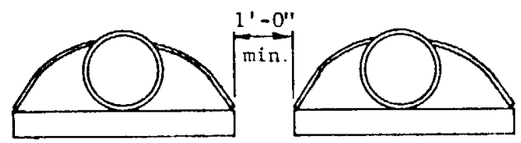

MULTIPLE INSTALLATION SPACING

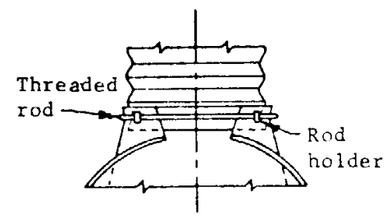

TYPE 2

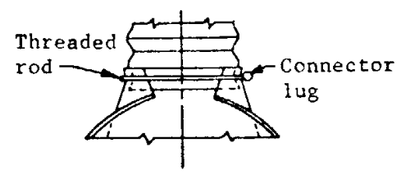

TYPE 3

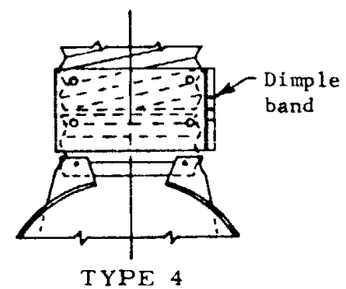

TYPE 4

GENERAL NOTES

The end section may be joined to the pipe, pipe arch or connector section by bolts, rivets, dimpled bands or threaded rod type fasterners. For allowable connection types, see table.

For the Type 1 connection, maximum allowable spacing shall be 1' - 0" with a minimum of 8 bolts or rivets per joint. 3/8" bolts or rivets shall be used for pipe sizes 18" through 42". 48" and 54" sizes shall use 1/2" bolts or rivets and 3/4" bolts shall be used for 60" and over.

Use Type 2 or 3 connections only on annular pipe or helical pipe with an annular end groove.

The foregoing applies to corresponding area arches.

All components of the end section shall be galvanized.

Embankment slope shall be warped to match slope of end section.

When pipe is exposed beyond normal embankment slope, a covering berm shall be added. See Std. C-13.01.

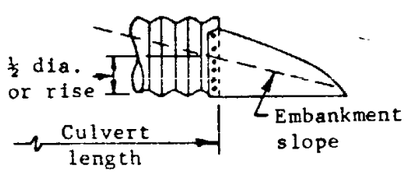

Right Angle Culvert

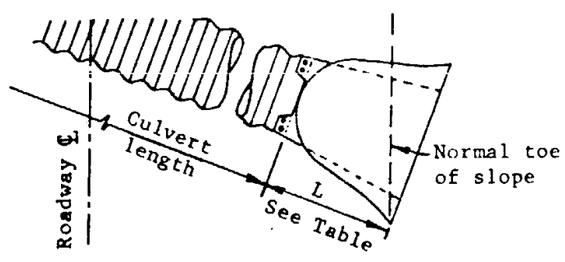

Skewed Culvert

CULVERT LENGTH AS SHOWN ON PLANS

ARIZONA HIGHWAY DEPARTMENT
PLANS DIVISION

Rev 4-28-70

END SECTION CORRUGATED METAL PIPE AND PIPE ARCH

Drawn	D.G. 4-67	Drawing No.
Traced	R.A.F. 6-67	
Checked	J.P.O. 4-70	C-13.05
Approved Engr. Plans	[illegible] 4-70	

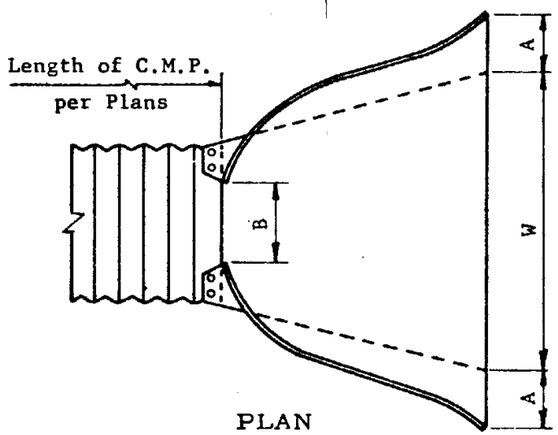

PLAN

PIPE DIA.	GA.	DIMENSIONS - INCHES A ±1	B Max.	H ±1	L ±1½	W ±2	APPROX. SLOPE
24	16	10	13	6	41	48	2 1/2
30	14	12	16	8	51	60	2 1/2
36	14	14	19	9	60	72	2 1/2
42	12	16	22	11	69	84	2 1/2
48	12	18	27	12	78	90	2 1/4
54	12	18	30	12	84	102	2

PIPE ARCH SPAN	RISE	GA.	DIMENSIONS - INCHES A ±1	B Max.	H ±1	L ±1½	W ±2	APPROX. SLOPE
29	18	16	9	14	6	32	48	2 1/2
36	22	14	10	16	6	39	60	2 1/2
43	27	14	12	18	8	46	75	2 1/2
50	31	12	13	21	9	53	85	2 1/2
58	36	12	18	26	12	63	90	2 1/2
65	40	12	18	30	12	70	102	2 1/2
72	44	12	18	33	12	77	114	2 1/4

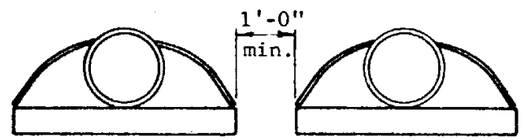

SPACING FOR MULTIPLE INSTALLATION

GENERAL NOTES

The end section shall be joined to the pipe, arch, connector or adaptor by welding, 3/8" bolts or rivets. The maximum allowable spacing of the bolts or rivets shall be 1'-0" but in no case shall there be less than 8 bolts or rivets per joint.

When an adaptor is used, the adaptor shall meet the requirements for a standard coupling band.

End sections comprised of two or more pieces may be field assembled using 3/8" bolts or rivets.

End sections may be joined directly to pipe or pipe arch without use of 24" connectors.

All components of the end section shall be galvanized.

Embankment slope shall be warped to match slope of end section.

When pipe is exposed beyond normal embankment slope, a covering berm shall be added see Std. C-13.01.

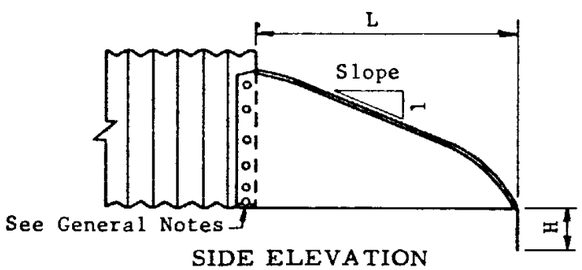

SIDE ELEVATION

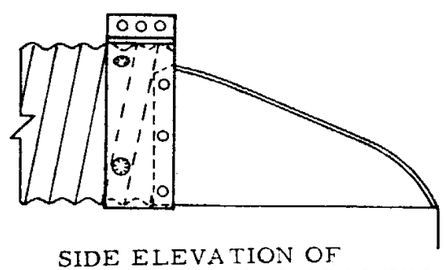

SIDE ELEVATION OF INSTALLATION USING ADAPTOR

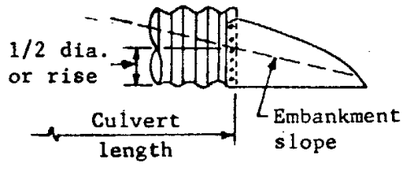

Right Angle Culvert

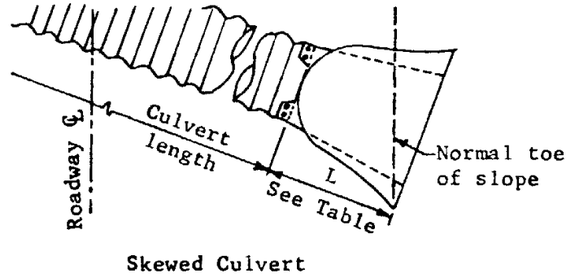

Skewed Culvert

CULVERT LENGTH AS SHOWN ON PLANS

ARIZONA HIGHWAY DEPARTMENT
PLANS DIVISION

Rev 12-17-68

END SECTION CORRUGATED METAL PIPE AND PIPE ARCH

Drawn	D.G. 4-67	Drawing No.
Traced	R.A.F. 6-67	
Checked	J.P.O. JPO 5-68	C-13.05
Approved Engr. Plans	L Heidecker 5-68	

TABLE I

CORRUGATED, CIRCULAR, STEEL PIPE - 2 2/3" X 1/2" ANNULAR OR HELICAL CORRUGATIONS
RIVETED, WELDED OR LOCK SEAM FABRICATION — H-20 LOADING

Dia.	16 Ga.-.064"		14 Ga.-.079"		12 Ga.-.109"		10 Ga.-.138"		8 Ga.-.168"	
	Min.	Max.	Min.	Max.	Min.	Max.	Min.	Max.	Min.	Max.
12	2	76	2	83						
15	2	60	2	66						
18	3	51	2	56	1	71				
24	3	37	2	41	1	48				
30	3	31	2	33	1	37				
36	3	26	2	28	1	32	1	34		
42	2	26	2	28	2	29	2	31	2	32
48	2	26	2	27	2	28	2	29	2	30
54			2	26	2	27	2	28	2	28
60					2	26	2	27	2	28
66					2	26	2	26	2	27
72							2	26	2	26
78									3	26
84									3	26

TABLE II

CORRUGATED, CIRCULAR, STEEL PIPE - 3" X 1" ANNULAR OR HELICAL CORRUGATIONS
RIVETED, WELDED, LOCK SEAM — H-20 LOADING

Dia.	16 Ga.-.064"		14 Ga.-.079"		12 Ga.-.109"		10 Ga.-.138"		8 Ga.-.168"	
	Min.	Max.	Min.	Max.	Min.	Max.	Min.	Max.	Min.	Max.
36	2	29	2	41	1	56	1	65	1	70
42	2	24	2	35	1	44	1	50	1	60
48	3	21	2	30	1	38	1	42	1	49
54	3	19	2	27	1	34	1	37	1	42
60	3	18	2	24	2	31	2	34	1	37
66	3	16	3	22	2	30	2	32	2	34
72	3	15	3	20	2	29	2	30	2	32
78	3	13	3	18	2	28	2	29	2	31
84			3	18	2	27	2	28	2	29
90			3	17	3	26	3	27	3	28
96					3	24	3	25	3	26
102					3	22	3	24	3	25
108					3	21	3	22	3	23
114							3	21	3	22
120							3	20	3	21

TABLE III

STRUCTURAL PLATE PIPE - 6" X 2" CORRUGATIONS
BOLTED FABRICATION (4 - 3/4", A-325 bolts per foot of seam) * — H-20 LOADING

Dia.	12 Ga.		10 Ga.		8 Ga.			7 Ga.			5 Ga.			3 Ga.			1 Ga.		
	Min.	Max.	Min.	Max.	Min.	Max.		Min.	Max.		Min.	Max.		Min.	Max.		Min.	Max.	
		(1)		(1)		(1)	(2)		(1)	(2)		(1)	(2)		(1)	(2)		(1)	(2)
60	1	39	1	57	1	66	75	1	71	86	1	79	158	1	88	176	1	96	198
72	1	32	1	46	1	49	63	1	52	72	1	56	87	1	61	122	1	66	132
84	1	28	1	38	1	40	54	1	42	62	1	45	74	1	48	88	1	51	102
96	2	24	2	34	2	35	47	2	36	54	2	38	65	2	40	77	2	42	83
108	2	21	2	31	2	32	42	2	33	48	2	34	58	2	36	67	2	37	73
120	2	19	2	29	2	30	37	2	31	42	2	32	52	2	33	60	2	34	66
132	3	18	3	26	3	29	33	3	29	39	3	30	46	3	31	55	3	32	60
144	3	16	3	23	3	28	31	3	28	36	3	29	42	3	29	51	3	30	55
156	3	15	3	21	3	27	29	3	27	33	3	28	40	3	28	47	3	29	51
168	3	14	3	19	3	26		3	27	30	3	27	37	3	28	43	3	28	47
180	3	13	3	18	3	24		3	27	29	3	27	34	3	27	41	3	27	44
192			3	18	3	23		3	26		3	27	32	3	27	38	3	27	42
204			4	17	4	22		4	25		4	26	30	4	26	36	4	27	40
216					4	20		4	24		4	26	29	4	26	34	4	26	37
228					4	20		4	22		4	26		4	26	32	4	26	35
240								4	21		4	26		4	26	30	4	26	33
252											4	25		4	26	30	4	26	31

NOTE: (1) indicates circular pipe.
(2) indicates 5% vertically elongated pipe.
When sizes below heavy line are used, design calculations shall be prepared and submitted for checking.

* Bolts shall be torqued to not less than 200 ft. lbs. nor greater than 300 ft. lbs.

GENERAL NOTES

All fill heights are measured, in feet, from finished grade to top of pipe.

Minimum fill heights shall be as noted except no pipe shall extend above the subgrade.

Fill heights over 100' shall be used only after a thorough investigation of the foundation material.

All corrugated metal pipe and appurtenant parts shall be galvanized.

For installation details, see Std. C-13.01.

For fill height design data, see Std. C-13.07.

Gauge change c'

ARIZONA HIGHWAY DEPARTMENT
PLANS DIVISION

CORRUGATED METAL PIPE DESIGN FILL HEIGHTS

Drawn	D.G.	Drawing No.
Traced	S.L.T. 9-67	C-13.06
Checked	J.P.O. JPO 5-68	
Approved Engr. Plans	G Heisleber 5-68	

Rev

Gage	2 2/3" X 1/2" Corrugations A_s	I	r	C_u 1 rivet	C_u 2 rivet	3" X 1" Corrugations A_s	I	r	C_u 2-5/16 rivets	C_u 2-3/8 rivets	C_u 2-7/16 rivets	6" X 2" Corrugations A_s	I	r	C_u 4-bolts ft.	C_u 6-bolts ft.	C_u 8-bolts ft.
16	.0646	.001892	.1726	16750	21500	.0742	.008658	.3452	19200	25800							
14	.0808	.002392	.1726	18200	29800	.0927	.010833	.3452	26500	34300							
12	.1130	.003425	.1726	23400	46800	.130	.015458	.3452		41600	53000	.1297	.060416	.688	42000		
10	.1454	.004533	.1726	24500	49000	.1674	.020175	.3452		43500	61000	.1669	.078166	.688	62000		
8	.17775	.005725	.1726	25600	51300	.2048	.025083	.3452		45600	64000	.2041	.096166	.688	81000		
7												.2283	.1078	.688	93000		
5												.2666	.126916	.688	112000		
3												.3048	.146166	.688	132000		
1												.3432	.165833	.688	144000	184000	220000
3/8"												.4680	.232	.688			270000 ●

● 7/8" bolts. All other 6" X 2" C_u values are for 3/4" bolts.

Criterion 1. DEFLECTION OF PIPE

Formula* 1(a) $I \text{(for circular pipe)} = \dfrac{2.31\ R^3h - 57.3\ R^3}{26{,}800{,}000}$

Formula 1(b) I(for 5% vertically elongated pipe)=Substitute h/2 for h in 1a. Solve 1a for I and determine required gauge and corrugation from table. If 6" X 2" corrugation is indicated, solve for I in 1(b) to determine gauge required for elongated pipe. If I is negative, metal thickness required is less than the minimum tabular value.

Criterion 2. LONGITUDINAL SEAM STRENGTH

Formula 2(a) $C_a = \dfrac{Dh}{0.0046}$

Solve for C_a and determine gauge and corrugation from table of C_u values.

Criterion 3. BUCKLING OF PIPE WALL

Formula* 3(a) $f_u = 45{,}000 - 1.4547 \left[\dfrac{0.64\ R}{r}\right]^2$

Use r for the corrugation corresponding to the heaviest gauge determined by formulae 1a, 1b and 2a. Solve for f_u to determine the maximum allowable buckling stress.

Formula 3(b) $A_s = \dfrac{1.805\ Rh}{f_u}$

Solve for A_s, using f_u value determined in 3a, and select gauge and corrugation from table.

* When Deflection or Buckling is the control, an increase in the maximum h may be realized by backfilling to 95% Proctor density. This revises the applicable formulae to:

Formula 1(a) $I = \dfrac{2.08\ R^3h - 57.3\ R^3}{26{,}800{,}000}$

Formula 3(a) $f_u = 45{,}000 - 1.4547 \left[\dfrac{0.44\ R}{r}\right]^2$

EXAMPLE

Given: h = 27; D = 15; R = 90

Find: Gauge and corrugation required.

Solution:

Deflection of pipe

Formula 1(a) $I = \dfrac{(2.31)(729{,}000)(27) - (57.3)(729{,}000)}{26{,}800{,}000} = 0.138$

I values in table indicate a gauge requirement, for circular pipe, of 5 in 6" X 2" corr.

Formula 1(b) $I = \dfrac{(1.155)(729{,}000)(27) - (57.3)(729{,}000)}{26{,}800{,}000} = -0.711$

The result being negative indicates a gauge requirement lighter than 12 gauge when pipe is elongated 5% vertically.

Longitudinal Seam Strength

Formula 2(a) $C_a = \dfrac{(15)(27)}{0.0046} = 88{,}000$

Referring to table, 7 gauge, 6" X 2" corr. is required.

Buckling of Pipe Wall

Formula 3(a) $f_u = 45{,}000 - 1.4547 \left[\dfrac{(0.64)(90)}{.688}\right]^2 = 34820$

Note that since a 6" X 2" corr. is indicated by the preceding results, the 6" X 2" value for r is used.

The result (allowable buckling stress) is used in the following formula 3(b) to determine gauge requirement.

Formula 3(b) $A_s = \dfrac{(1.805)(90)(27)}{34820} = 0.126$

The table indicates a gauge requirement of 12 gauge in 6" X 2" corr.

Analysis: Using vertically elongated pipe, the lightest gauge and corr. that will satisfy all requirements is 7 gauge, 6" X 2" corr. Similarly, with circular pipe the lightest gauge is 5. Since cost-wise the two are comparable, 7 ga., 6" X 2" 5% vertically elongated pipe is selected.

Criteria 1, 2 and 3 embody the factors to be investigated in the design of corrugated metal pipe culverts.

Appurtenant formulae are developed from data supplied by the B.P.R. 1966 publication titled "Corrugated Metal Pipe Culverts - Structural Design Criteria and Recommended Installation Practices." These formulae provide safety factors as follows: Criteria 1 = 3.33; Criteria 2 = 3.33 and Criteria 3 = 2.00.

Constants used are:
Embankment weight/cu. ft. = 130 lbs.
Embankment density = 90% Proctor.
Modulus of passive earth resistance = 1000 p.s.i.
Soil stiffness coefficient = 0.32.
Deflection lag factor = 1.39.
Modulus of elasticity = 29,000,000 p.s.i.

Explanation of symbols used:
A_s = Area/lin. inch of pipe in sq. inches.
C_a = Actual ring compression in lb./ft.
C_u = Allowable ring compression in lb./ft.
D = Pipe diameter in ft.
f_a = Actual buckling stress in p.s.i.
f_u = Allowable buckling stress in p.s.i.
h = Fill height; fin. grade to top of pipe in ft.
I = Moment of inertia of pipe wall in inches^4/ inch.
R = Radius of pipe in inches.
r = Radius of gyration of pipe wall in inches.

ARIZONA HIGHWAY DEPARTMENT
PLANS DIVISION

CORRUGATED METAL PIPE FILL HEIGHT DESIGN DATA

Drawn	D.G. 9-67	Drawing No.
Traced	S.L.T. 10-67	
Checked	J.P.O. JPO 5-68	C-13.07
Approved Engr. Plans	H. Gridelen 5-68	

Rev 12-5-68

TABLE 1-A

CORRUGATED, STEEL PIPE ARCH. 2 2/3" X 1/2" CORRUGATIONS. RIVETED, WELDED OR LOCK SEAM FABRICATION. H-20 LOADING

Size - In. Span X Rise	Opening Area Sq. Ft.	Corner Radius In.	Fill Heights - Ft. Maximum Corner Pressure = 4000 Lb./Sq. Ft.									
			16 Ga.-.064"		14 Ga.-.079"		12 Ga.-.109"		10 Ga.-.138"		8 Ga.-.168"	
			Min.	Max.	Min.	Max.	Min.	Max.	Min.	Max.	Min.	Max.
18 X 11	1.1	3.5	1 1/2	12	1 1/2	12	1 1/2	12	1 1/2	12	1 1/2	12
22 X 13	1.6	4.0	1 1/2	11	1 1/2	11	1 1/2	11	1 1/2	11	1 1/2	11
25 X 16	2.2	4.0	2	10	2	10	2	10	2	10	2	10
29 X 18	2.8	4.5	2	10	2	10	2	10	2	10	2	10
36 X 22	4.4	5.0	2	9	2	9	2	9	2	9	2	9
43 X 27	6.4	5.5	2	8	2	8	2	8	2	8	2	8
50 X 31	8.7	6.0	3	7	3	7	3	7	3	7	3	7
58 X 36	11.4	7.0			3	7	3	7	3	7	3	7
65 X 40	14.3	8.0					3	8	3	8	3	8
72 X 44	17.6	9.0							4	8	4	8

GENERAL NOTES

All fill heights are measured from finished grade to top of pipe arch.

Minimum fill heights shall be as noted except no pipe arch shall extend above the subgrade.

To determine fill heights for sizes other than those shown in the tables, use Std. C-13.09 Pipe Arch Design Data.

TABLE 2-A

STRUCTURAL PLATE PIPE ARCH. 6" X 2" Corrugations.
BOLTED FABRICATION, 4-BOLTS/FT. * H-20 LOADING

Size Span & Rise	Opening Area Sq. Ft.	Corner Radius In.	Fill Heights - Ft. Max. Corner Pressure= 4000 Lb./Sq. Ft.							
			12 Ga.		10 Ga.		8 Ga.		7 Ga.	
			Min.	Max.	Min.	Max.	Min.	Max.	Min.	Max.
6'- 1" X 4'-7"	22	18	1	15	1	15	1	15	1	15
7'- 0" X 5'-1"	28	18	1 1/2	13	1 1/2	13	1 1/2	13	1 1/2	13
7'-11" X 5'-7"	35	18	1 1/2	12	1 1/2	12	1 1/2	12	1 1/2	12
8'-10" X 6'-1"	43	18	1 1/2	10	1 1/2	10	1 1/2	10	1 1/2	10
9'- 9" X 6'-7"	52	18	2	9	2	9	2	9	2	9
10'-11" X 7'-1"	61	18	2	8	2	8	2	8	2	8
11'-10" X 7'-7"	71	18			2	7	2	7	2	7
12'- 8" X 8'-1"	81	18			3	6	3	6	3	6

* Bolts shall be torqued to not less than 200 ft. lbs. nor greater than 300 ft. lbs.

ARIZONA HIGHWAY DEPARTMENT
PLANS DIVISION

Rev

CORRUGATED METAL PIPE ARCH DESIGN FILL HEIGHTS

Drawn	D.G. 10-67	Drawing No.
Traced	S.L.T. 10-67	
Checked	J.P.O. JPO 5-68	C-13.08
Approved Engr. Plans	L Heidecker 5-68	

TABLE I											
2 2/3" X 1/2" Corrugations						6" X 2" Corrugations					
Gage	A_s	I	r	C_u 1 rivet	C_u 2 rivet	A_s	I	r	C_u 4-bolts ft.	C_u 6-bolts ft.	C_u 8-bolts ft.
16	.0646	.001892	.1726	16750	21500						
14	.0808	.002392	.1726	18200	29800						
12	.1130	.003425	.1726	23400	46800	.1297	.060416	.688	42000		
10	.1454	.004533	.1726	24500	49000	.1669	.078166	.688	62000		
8	.17775	.005725	.1726	25600	51300	.2041	.096166	.688	81000		
7						.2283	.1078	.688	93000		
5						.2666	.126916	.688	112000		
3						.3048	.146166	.688	132000		
1						.3432	.165833	.688	144000	184000	220000

TABLE II			
h or h'	L_L	L_D	L_L+L_D
1'	1800	130	1930
2'	800	260	1060
3'	600	390	990
4'	400	520	920
5'	250	650	900
6'	200	780	980
7'	175	910	1085
8'	100	1040	1140

For h=9' and over, L_L is eliminated so total load then becomes h X 130.

Criteria 1, 2, 3 and 4 embody the factors to be investigated in the design of corrugated metal pipe arch culverts.

Appurtenant formulae are condensed from data supplied by the 1967 edition of American Iron and Steel Institute's publication titled "Handbook of Steel Drainage and Highway Construction Products" and the B. P. R. 1966 publication titled "Corrugated Metal Pipe Culverts - Structural Design Criteria and Recommended Installation Practices." These formulae provide safety factors of 1, 3.33, 2 and 3.33 respectively for Criteria 1, 2, 3 and 4.

Constants used are the same as for Std. C-13.07, "Corrugated Metal Pipe Fill Height Design Data."

Explanation of variable symbols used:

A_s = Area per lin. inch of pipe arch in sq. in.
C_a = Actual ring compression in lbs./ft.
C_u = Allowable ring compression in lbs./ft.
f_u = Allowable buckling stress in p.s.i.
h = Max. fill height; fin. grade to top of pipe arch.
h' = Min. fill height; fin. grade to top of pipe arch.
I = Moment of inertia of pipe arch wall in inches^4/ inch
R = 3H+3S in inches
r = Radius of gyration of pipe wall in inches.
Δ_u = Allowable deflection in inches.
Δ_a = Actual deflection in inches
S = Span in ft.
H = Rise in ft.
R_c = Corner radius in inches
P = Corner pressure in lbs./sq.ft.

Criterion I CORNER PRESSURE

Formula 1 (a) $P = \frac{6S(L_L + L_D)}{R_c}$

Using h, take $(L_L + L_D)$ from Table II and solve for P. Note: If P>4000, consideration shall be given toward possible special back fill design.

Formula 1 (b) $(L_L + L_D) = \frac{667R_c}{S}$

Solve for $L_L + L_D$. Use Table II to determine h'.

Criterion 2 LONGITUDINAL SEAM STRENGTH.

Formula 2 $C_a = 1.67S\ (L_L + L_D)$

Using h, take $(L_L + L_D)$ from Table II and solve for C_a. Determine gauge and corr. by comparing C_a with C_u values in Table I.

Criterion 3 BUCKLING OF PIPE ARCH WALL

Formula 3 (a) $f_u = 22500 - 0.72735\ (3.84S/r)^2$

Formula 3 (b) $f_u = \frac{S(L_L + L_D)}{24A_s}$

Use r for corrugation indicated by Formula 2
Equate f_u from 3(a) in 3(b) and solve for A_s
Determine gauge and corrugation from Table I.

Criterion 4 DEFLECTION

Formula 4(a) $\Delta_u = 0.6H$

Formula 4(b) $\Delta_a = \frac{1.507hSR^3}{29{,}000{,}000\ I + 61R^3}$

Use value I of heaviest gauge and corrugation required by Criteria 2 and 3. If $\Delta_u > \Delta_a$, deflection is satisfactory.

EXAMPLE:

Given: 72" X 44" Pipe Arch, h = 15, R_c = 9.

Find: Gauge, corrugation, h'

Formula 1(a) $P = \frac{6 \times 6 \times 1950}{9}$

$= 7800$

Since P> 4000 investigation of special backfill and/or corner support design is mandatory.

Formula 1(b) $(L_L + L_D) = \frac{667 \times 9}{6}$

$= 1000$

From Table II, h' = 3

Formula 2 $C_a = 1.67 \times 6 \times 1950$
$= 19550$

Referring to Table I, 12 ga., 1-rivet, 2 2/3" X 1/2" is satisfactory with respect to seam strength

Formula 3(a) $f_u = 22500 - 0.72735 \times (3.84 \times 6/.1726)^2$
$= 9620$

Formula 3(b) $9620 = \frac{6 \times 1950}{24A_s}$

$A_s = 0.0507$

Referring to Table I, value of A_s indicates a lighter gauge than that called for in Formula 2 so 12 ga., 1-rivet, 2 2/3" X 1/2" is safe from buckling.

Formula 4 (a) $\Delta_u = 0.6 \times 3.67$
$= 2.202$

$\Delta_a = \frac{1.507 \times 15 \times 6 \times (3 \times 6 + 3 \times 3.67)^3}{29{,}000{,}000 \times 0.003425 + 61 \times (3 \times 6 + 3 \times 3.67)^3}$
$= 2.08$

$\Delta_u > \Delta_a$ so deflection is satisfactory.

ARIZONA HIGHWAY DEPARTMENT
PLANS DIVISION

Rev 12-5-68

CORR. METAL PIPE ARCH FILL HEIGHT DESIGN DATA

Drawn	D.C. 10-67	Drawing No.
Traced	R.A.F. 11-67	C-13.09
Checked	J.P.O. 5-68	
Approved Engr. Plans	5-68	

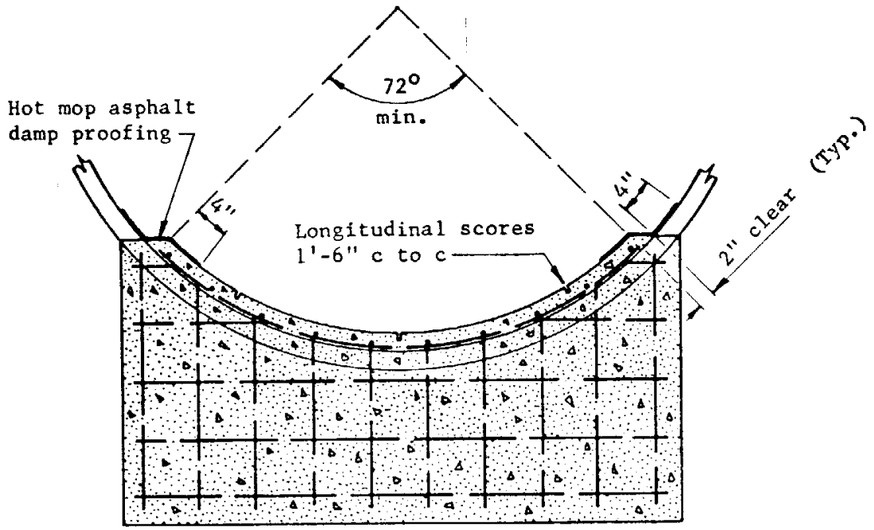

FULL CIRCULAR PIPE,
C. M. P. OR STRUCTURAL PLATE PIPE

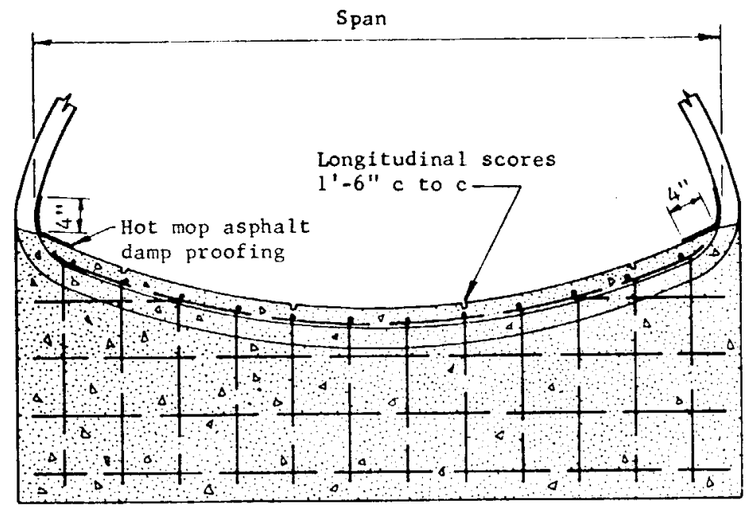

PIPE ARCH OR
STRUCTURAL PLATE ARCH

END ELEVATIONS

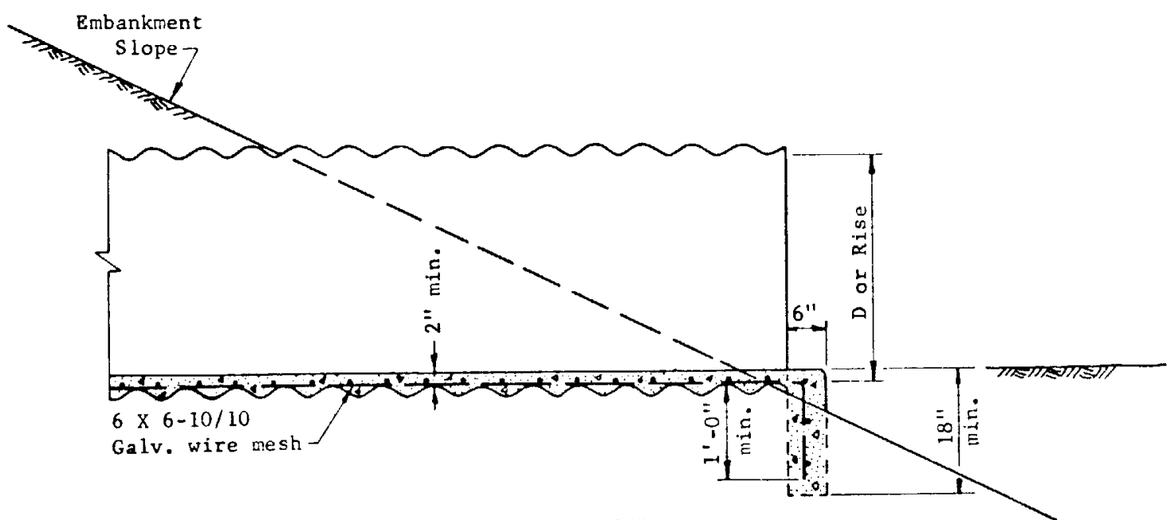

PIPE & PIPE ARCH
LONGITUDINAL SECTION

GENERAL NOTES

The wire mesh shall be fastened or welded in an approved manner to the corrugation crests.

All laps shall be 6" minimum.

Invert paving shall not be placed until fill over pipe is completed.

Concrete shall be Class A or pneumatic mortar.

ARIZONA HIGHWAY DEPARTMENT PLANS DIVISION		Rev 11-14-68
CORRUGATED METAL PIPE CONCRETE INVERT PAVEMENT		
Drawn	D.G.	Drawing No.
Traced	R.A.F. 5-17-67	C-13.10
Checked	J.P.O. JPO 5-68	
Approved Engr. Plans	G. Heidecker 5-68	

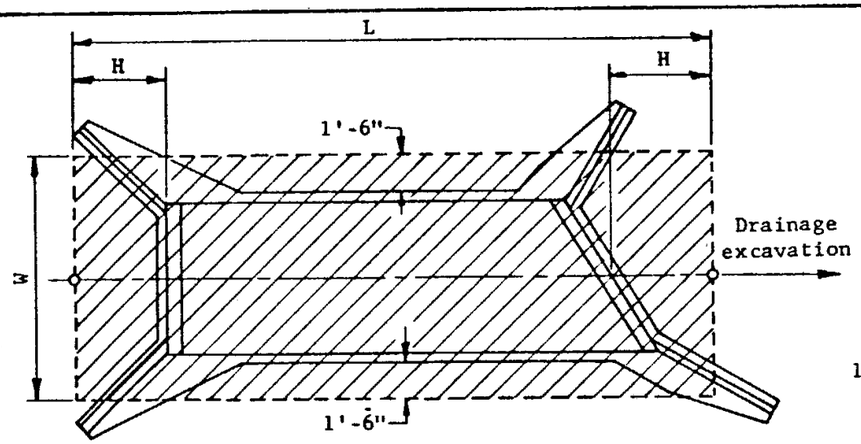

Plan View Showing Structural Excavation Length, L, and Width, W, for Payment Limits

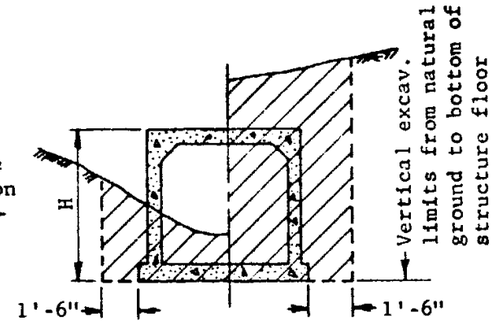

Section Showing Structural Excavation Payment Limits

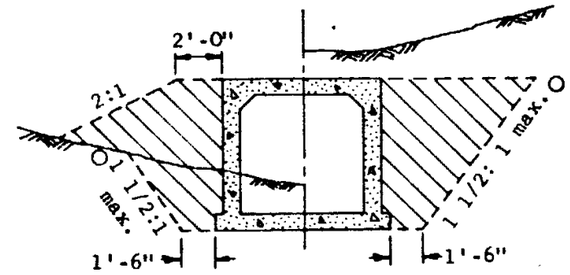

Section Showing Special Backfill

○Plans show max. quantities

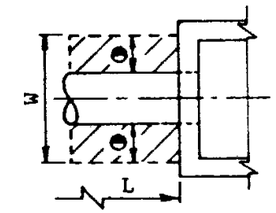

Plan Showing Catch Basin, Manhole or Similar Structure

CONCRETE BOX CULVERTS

H = Height of barrel or headwall excluding cutoff wall.

⊖ = 1'-6" max.

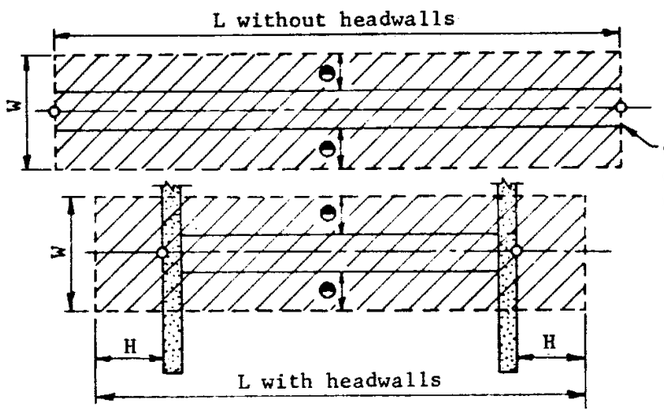

Pipe line in trench and pipe culvert with or without one or more headwalls.

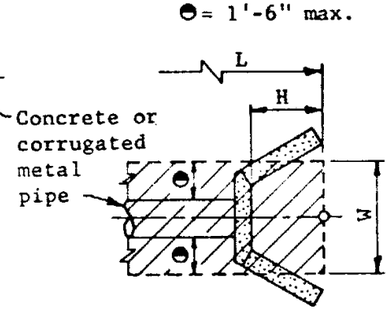

Pipe with normal wingwall, flared end sect. or U headwall

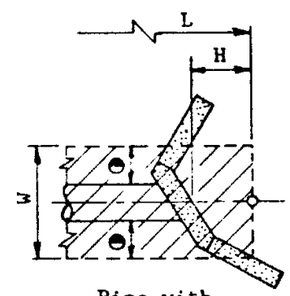

Pipe with skewed wingwall

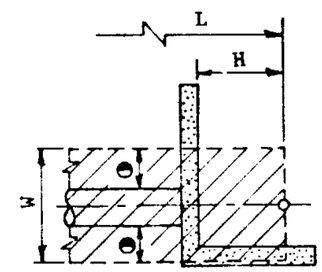

Pipe with L headwall

Plan View Showing Length, L, and Width, W, for Payment Limits

GENERAL NOTES

Payment limits shown include structural excavation for headwalls, cutoff walls, wingwalls, end sections etc.

Placement of special backfill around headwalls and wingwalls shall be the same as that for structures.

Payment limits shown shall be applied to multiple installations by discounting the overlap in width limits.

D indicates the O.D. and maximum outside width of circular and arch type structures respectively.

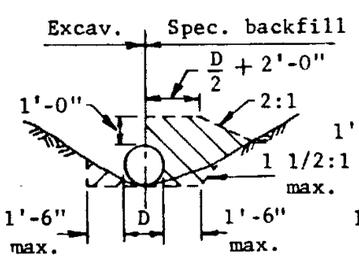

Metal or Concrete Pipe in Embankment

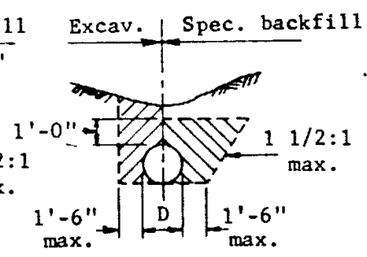

Metal Pipe in Trench

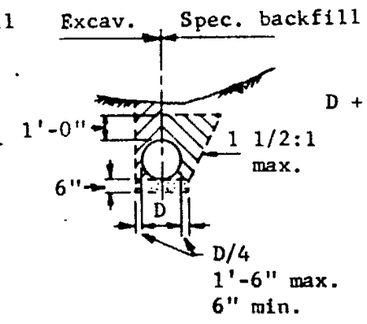

Concrete Pipe in Trench

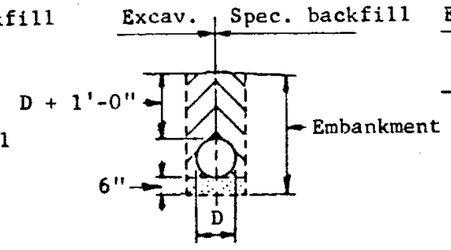

Concrete Pipe in Imperfect Trench

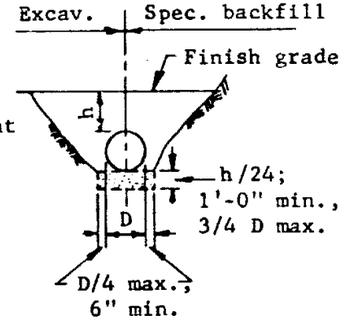

Concrete Pipe in Rock

Sections Showing Structural Excavation Width Limits and Special Backfill Placement

PIPE LINES AND PIPE CULVERTS

ARIZONA HIGHWAY DEPARTMENT PLANS DIVISION		Rev 12-5-68
STRUCTURAL EXCAVATION PAYMENT LIMITS AND SPECIAL BACKFILL PLACEMENT		
Drawn	D.G. 12-66	Drawing No.
Traced	R.A.F. 2-68	C-13.11
Checked	J.P.O. JPO 5-68	
Approved Engr. Plans	G Wiedeker 5-68	

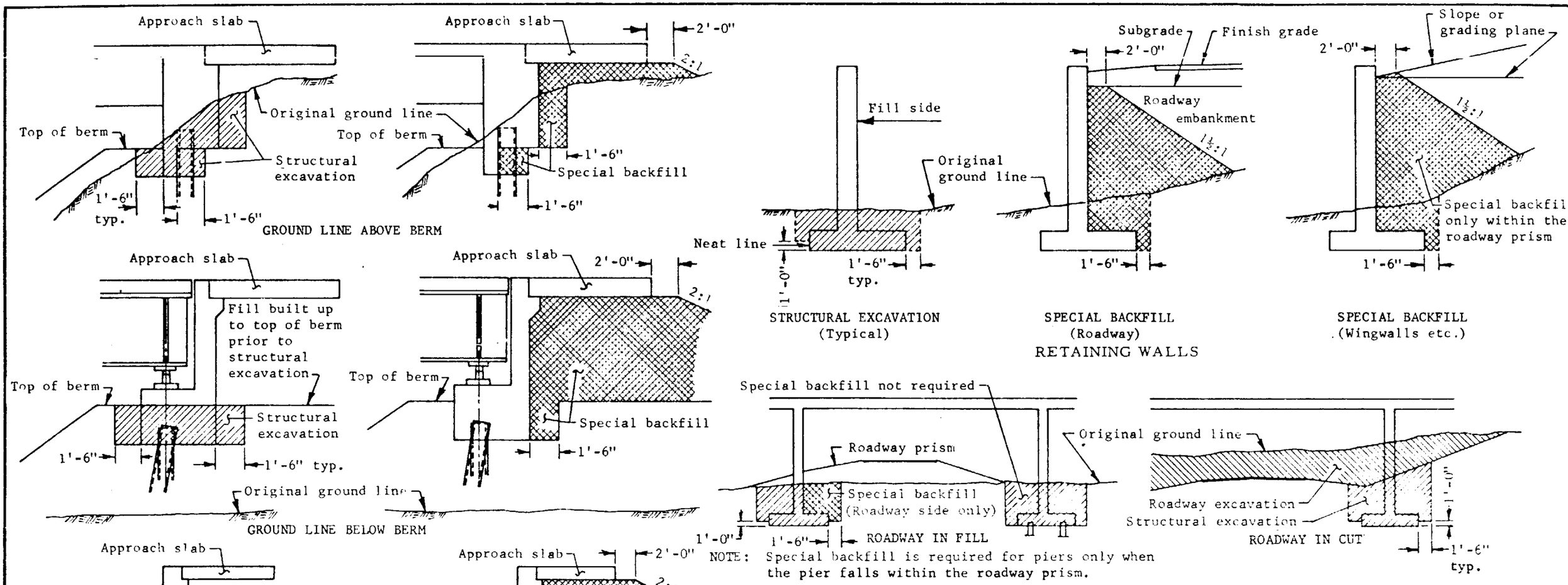

ARIZONA HIGHWAY DEPARTMENT
PLANS DIVISION

STRUCTURAL EXCAVATION
PAYMENT LIMITS
AND SPECIAL BACKFILL PLACEMENT
BRIDGES & RETAINING WALLS

Drawn	J.R.B. 12-69	Drawing No.
Traced	R.A.F. 1-70	C-13.12
Checked	J.P.O. JPO 4-70	
Approved Engr. Plans	[signature] 4-70	

Rev

DIMENSIONS									
I.D.	A	B	C	D	E	L	L+E	F	G
18"	6"	6"	1'-8"	4'-2"	2'-8"	9'-6"	12'-2"	1'-7"	4'-6"
24"	8"	8"	2'-0"	4'-8"	3'-6"	11'-6"	15'-0"	2'-1"	5'-6"
30"	8"	8"	2'-0"	5'-2"	4'-4"	13'-6"	17'-10"	2'-7"	6'-6"
36"	1'-0"	8"	2'-4"	5'-8"	5'-2"	15'-6"	20'-8"	3'-1"	7'-6"
42"	1'-1"	10"	2'-7"	6'-2"	6'-0"	17'-6"	23'-6"	3'-7"	8'-6"
48"	1'-2"	1'-0"	2'-10"	6'-8"	6'-10"	19'-6"	26'-4"	4'-1"	9'-6"

"U" HEADWALL									
I.D.	Conc. C.Y.		Reinf. Steel #4 Bars						lbs.
	For C.M.P.	For Conc. Pipe	a		b		b_1		
			No.	Lgth	No.	Lgth	No.	Lgth	
18"	1.68	1.65	12	4'-8"	6	4'-3"	10	5'-8"	90
24"	2.37	2.33	14	5'-4"	6	5'-3"	12	6'-8"	121
30"	3.01	2.96	18	5'-10"	6	6'-3"	12	7'-8"	152
36"	3.90	3.83	20	6'-8"	6	7'-3"	14	8'-8"	194
42"	4.72	4.63	24	7'-1"	6	8'-3"	14	9'-8"	263
48"	5.91	4.79	28	7'-8"	6	9'-3"	16	10'-8"	289

"L" HEADWALL									
I.D.	Conc. C.Y.		Reinf. Steel #4 Bars						lbs.
	For C.M.P.	For Conc. Pipe	a		b		b_1		
			No.	Lgth.	No.	Lgth.	No.	Lgth.	
18"	1.42	1.39	10	4'-8"	6	6'-9"	5	5'-8"	73
24"	2.00	1.96	12	5'-4"	6	8'-3"	6	6'-8"	97
30"	2.53	2.48	14	5'-10"	6	9'-9"	6	7'-8"	118
36"	3.27	3.20	16	6'-8"	6	11'-3"	7	8'-8"	149
42	4.04	3.95	18	7'-2"	6	12'-9"	7	9'-8"	194
48"	4.94	4.82	20	7'-8"	6	14'-3"	8	10'-8"	215

SINGLE PIPE HEADWALL							
I.D.	Conc. C.Y.		Reinf. Steel #4 Bars				lbs.
	For C.M.P.	For Conc. Pipe	a		b		
			No.	Lgth.	No.	Lgth.	
18"	1.17	1.14	8	4'-8½"	5	9'-3"	56
24"	1.64	1.60	10	5'-4½"	5	11'-3"	74
30"	2.05	2.00	10	5'-10½"	5	13'-3"	83
36"	2.63	2.56	12	6'-8½"	5	15'-3"	105
42"	3.24	3.15	14	7'-2½"	5	17'-3"	125
48"	3.96	3.84	16	7'-8½"	5	19'-3"	147

DOUBLE PIPE HEADWALL							
I.D.	C.Y. Conc.		Reinf. Steel #4 Bars				lbs.
	For C.M.P.	For Conc. Pipe	a		b		
			No.	Lgth.	No.	Lgth.	
18"	1.47	1.42	9	4'-8"	5	11'-11"	68
24'	2.07	2.00	11	5'-4"	5	14'-9"	88
30"	2.62	2.52	12	5'-10"	5	17'-7"	105
36"	3.40	3.27	14	6'-8"	5	20'-5"	131
42"	4.19	4.01	16	7'-2"	5	23'-3"	154
48"	5.15	4.92	17	7'-8"	5	26'-1"	175

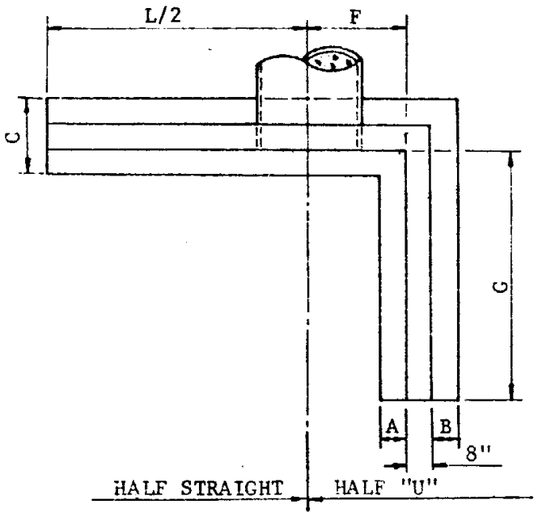

"L" HEADWALL

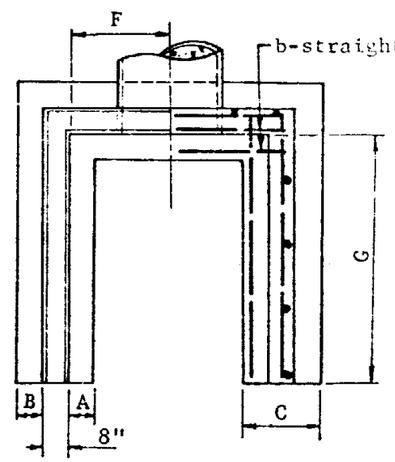

PLAN

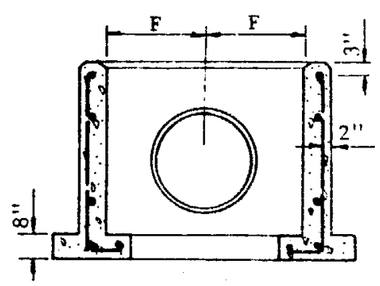

SECTION

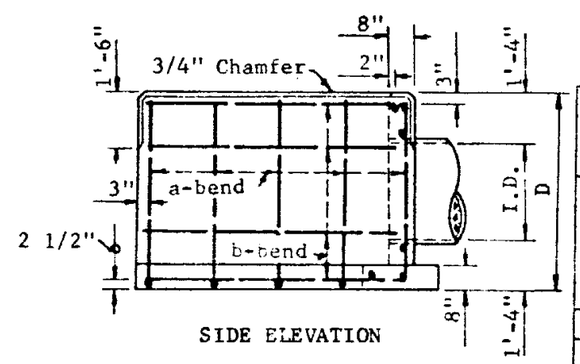

SIDE ELEVATION

"U" HEADWALL

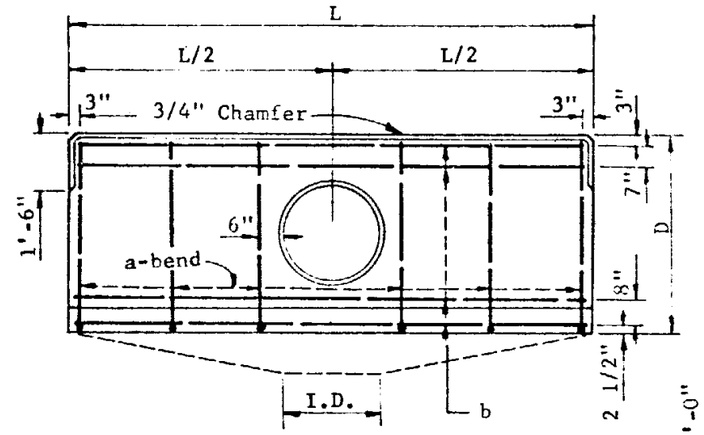

SINGLE PIPE

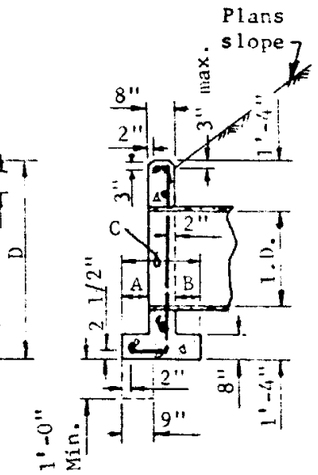

SECTION

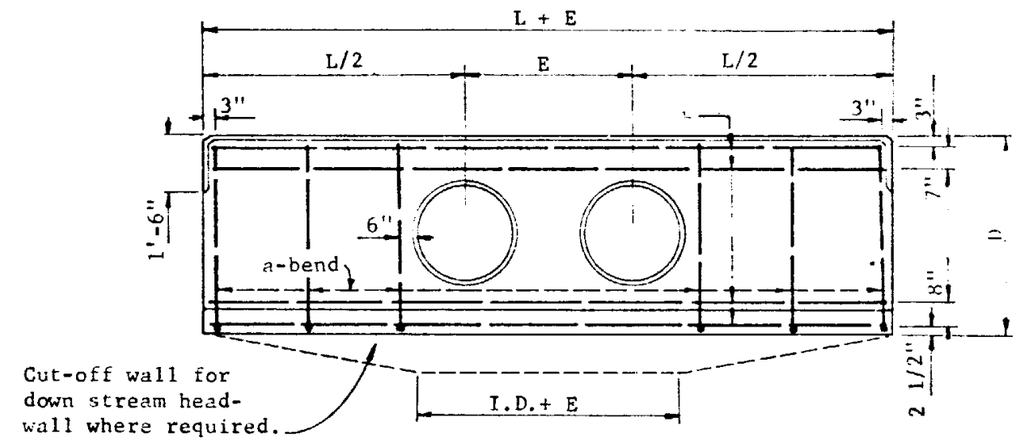

DOUBLE PIPE
STRAIGHT HEADWALLS

GENERAL NOTES
All concrete shall be Class A.
High point of headwall shall not project more than 3" above slope.

ARIZONA HIGHWAY DEPARTMENT
PLANS DIVISION

PIPE HEADWALL STRAIGHT, "L" & "U" TYPE

Drawn	L.O.M. 3-23-65	Drawing No.
Traced	S.L.T. 5-5-67	C-14.01
Checked	J.P.O. JPO 5-68	
Approved Engr. Plans	G Wiedeker 5-68	

Rev

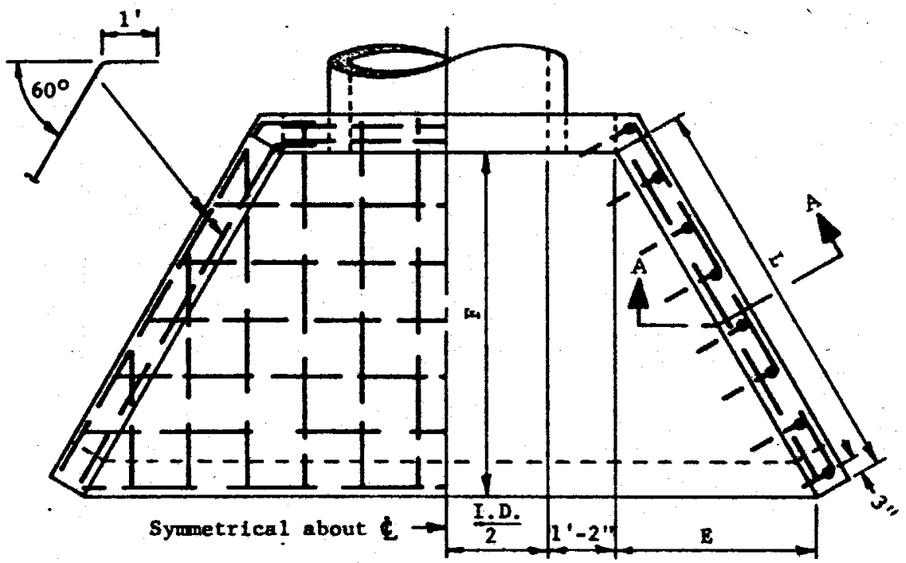

PLAN

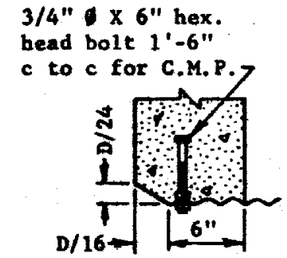

DETAIL NO. 1
Beveled dimensions common to C.M.P. and R.C.P.

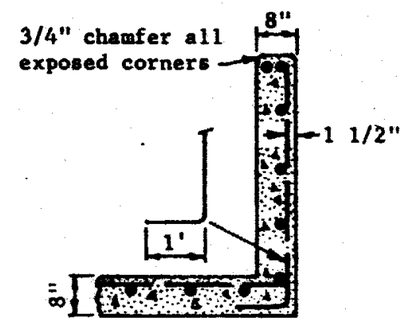

SECTION A-A

PIPE	DIMENSIONS				QUANTITIES		
					C.Y. CLASS A CONC.		
I.D.	L	E	F	X	C.M.P.	Deduct for R.C.P.	Reinf.Steel Lbs.
42"	7'-0"	3'-6"	6'-1"	2'-6"	4.45	0.09	205
48"	7'-6"	3'-9"	6'-6"	3'-0"	5.27	0.12	265
54"	8'-0"	4'-0"	6'-11"	3'-0"	5.40	0.14	295
60"	9'-0"	4'-6"	7'-10"	3'-0"	7.35	0.19	340
66'	10'-0"	5'-0"	8'-8"	3'-3"	7.88	0.23	390
72"	11'-0"	5'-6"	9'-6"	3'-3"	8.93	0.28	480
78"	11'-6"	5'-9"	10'-0"	3'-6"	10.01	0.34	490
84"	12'-0"	6'-0"	10'-5"	3'-9"	11.01	0.39	560

GENERAL NOTES

All concrete shall be Class A.

All reinforcing bars shall be #4 except two #6 bars over pipe. Bar spacing shall be 1'-0" c to c.

Plan shown is drawn for a 42" pipe.

High point of headwall shall not project more than 3" above slope.

The bevel detail will be required only on the inlet end of structures. When reinforced concrete pipe is placed with a bell or groove end up stream flush with headwall face, the bevel detail will not be required.

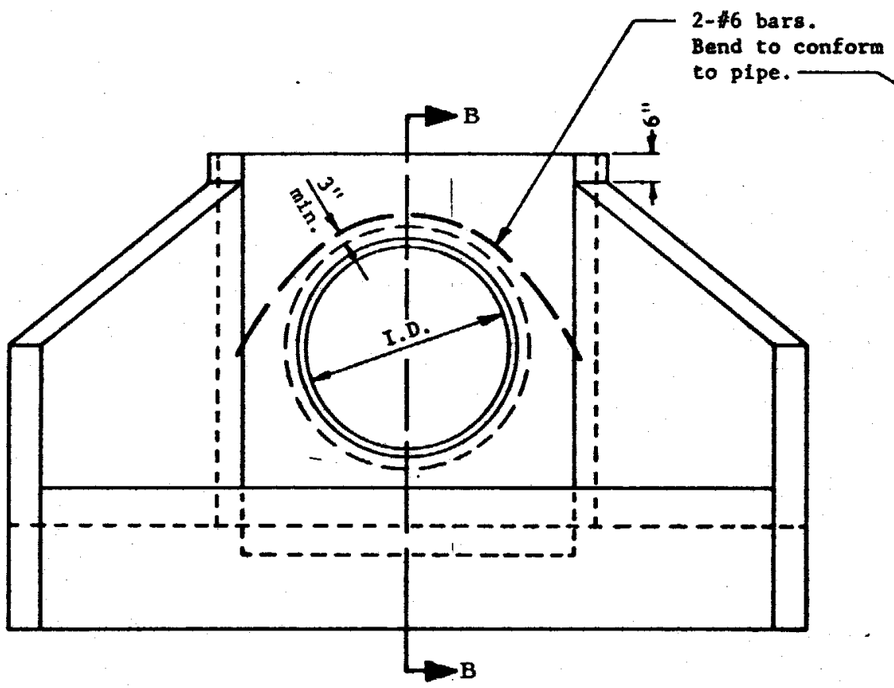

ELEVATION

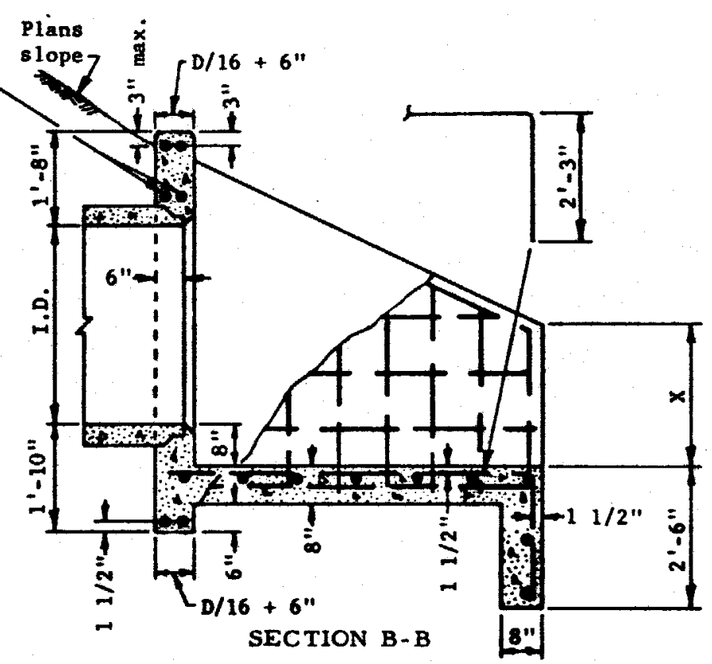

SECTION B-B

Reinf. conc. pipe with beveled inlet shown.
For C.M.P. see Detail No. 1.

ARIZONA HIGHWAY DEPARTMENT PLANS DIVISION		Rev
PIPE HEADWALLS 42" TO 84" DIAMETER PIPES		
Drawn	W.M.D. 2-36	Drawing No.
Traced	R.A.F. 1-69	C-14.02
Checked	J.P.O. JPO 1-69	
Approved Engr. Plans	Weicker 1-69	

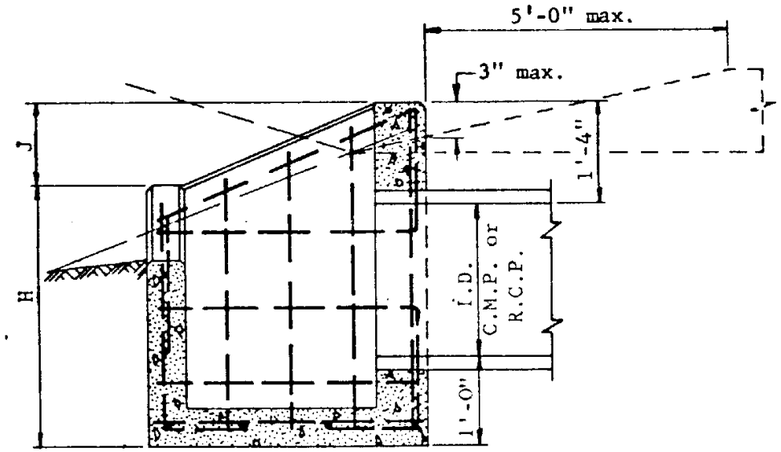

SECTION Z-Z

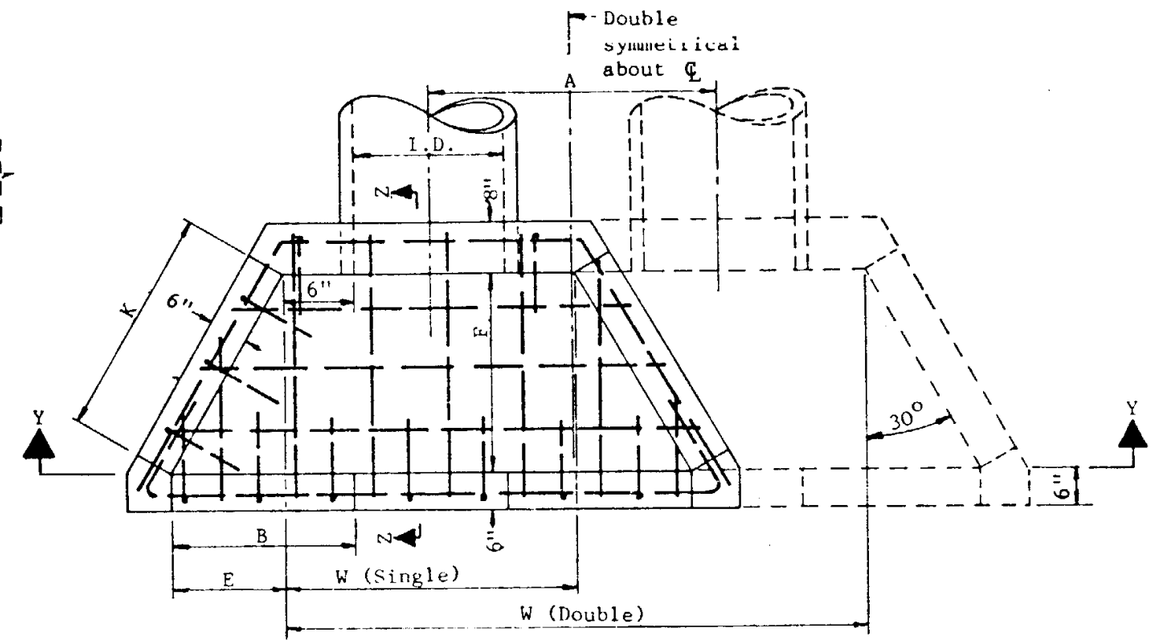

PLAN

All reinforcing shall be
#4 bars 1'-0" c to c

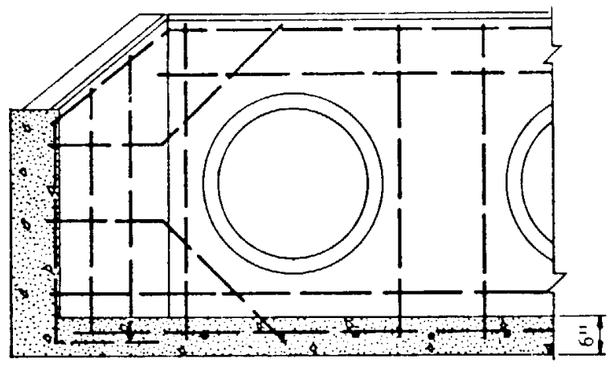

SECTION Y-Y

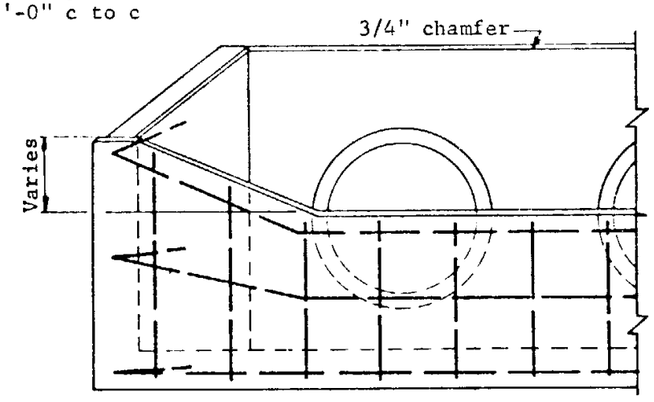

ELEVATION

GENERAL NOTES
Reference Std. C-13.01.
High point of headwall shall not project more than 3" above slope.
All concrete shall be Class A.

PIPE	DIMENSIONS									QUANTITIES					
	W									CONC. C.Y.				REINF. STEEL LBS.	
										Single		Double			
I.D.	Single	Double	A	B	E	F	H	J	K	C.M.P.	For Conc. Pipe Deduct	C.M.P.	For Conc. Pipe Deduct	Single	Double
18"	2'-6"	5'-2"	2'-8"	1'-3"	9"	1'-3 5/8"	3'-1"	9"	1'-6"	0.76	0.03	1.12	0.06	75	107
24"	3'-0"	6'-6"	3'-6"	1'-7 1/2"	1'-1 1/2"	1'-11 3/8"	3'-5"	11"	2'-3"	1.00	0.04	1.55	0.09	92	136
30"	3'-6"	7'-10"	4'-4"	2'-0"	1'-6"	2'-7 1/4"	3'-9"	1'-1"	3'-0"	1.50	0.06	2.29	0.13	112	166
36"	4'-0"	9'-2"	5'-2"	2'-4 1/2"	1'-10 1/2"	3'-3"	4'-0"	1'-4"	3'-9"	1.96	0.09	3.01	0.17	145	214
42"	4'-6"	10'-6"	6'-0"	2'-9"	2'-3"	3'-10 3/4"	4'-4"	1'-6"	4'-6"	2.49	0.11	3.85	0.23	189	279

ARIZONA HIGHWAY DEPARTMENT
PLANS DIVISION

Rev 11-14-68

DROP INLET HEADWALLS

Drawn	K.S. 10-39	Drawing No.
Traced	S.L.T. 8-67	C-14.03
Checked	J.P.O. JPO 5-68	
Approved Engr. Plans	G. Weinheder 5-68	

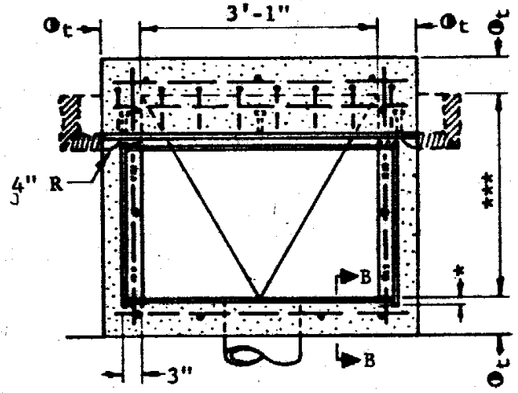

PLAN-CATCH BASIN NO. 1 - SINGLE

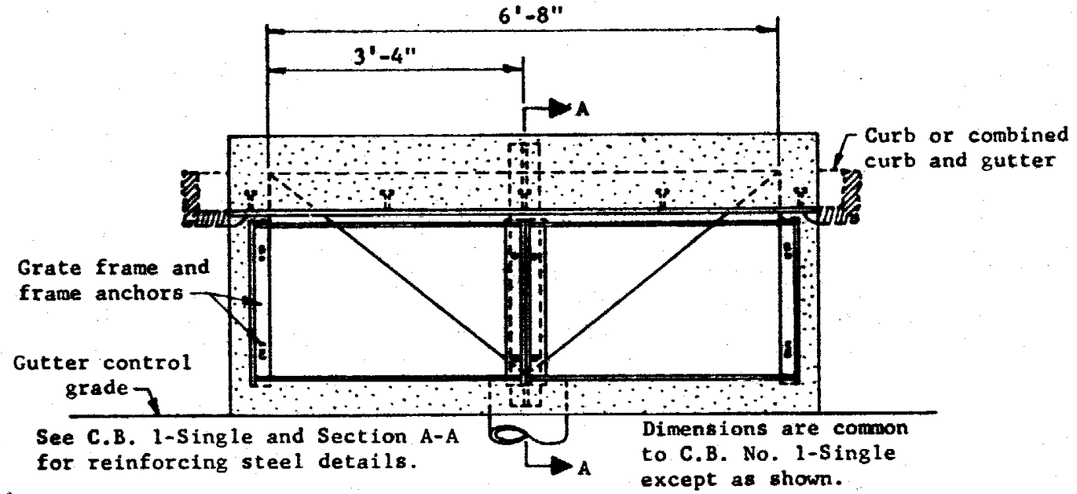

PLAN - CATCH BASIN NO. 1 -DOUBLE

GENERAL NOTES

Pipes can be placed in any wall.

Sump floor shall have a wood trowel finish and a minimum slope of 4:1 in all directions toward outlet pipe.

Welding shall be in accordance with A.H.D. Welding Specifications.

For grates LW-1, TW-2, etc., and frame details and opening areas, see Stds. C-15.06 and C-15.07.

Any specified gutter depression shall be warped to opening according to Std. C-15.08.

All structural steel shall be ASTM A 36.

Grate support and nose angle shall be given one shop coat of No. 1 paint.

All concrete shall be Class A.

Curb opening areas (Sq.Ft.) for Catch Basin No. 1-Single and Catch Basin No. 1-Double equal 0.26 and 0.55, respectively, for each inch of curb "h" + gutter depression - 2.1"

* 3/4" for longitudinal and 3" for transverse grates.

** 2'-0" for LW-1, LB-1, TW-1 and TB-1 grates. 1'-6" for LW-2, LB-2, TW-2 and TB-2 grates. Use 1'-6" dimension when catch basin is used with combined curb and gutter.

*** 2'-8 1/2" for LW-1, LB-1, TW-1 and TB-1 grates. 2'-2 1/2" for LW-2, LB-2, TW-2 and TB-2 grates.

● t = 6" when H is 8' or less; 8" when H is over 8'. (See Section B-B)

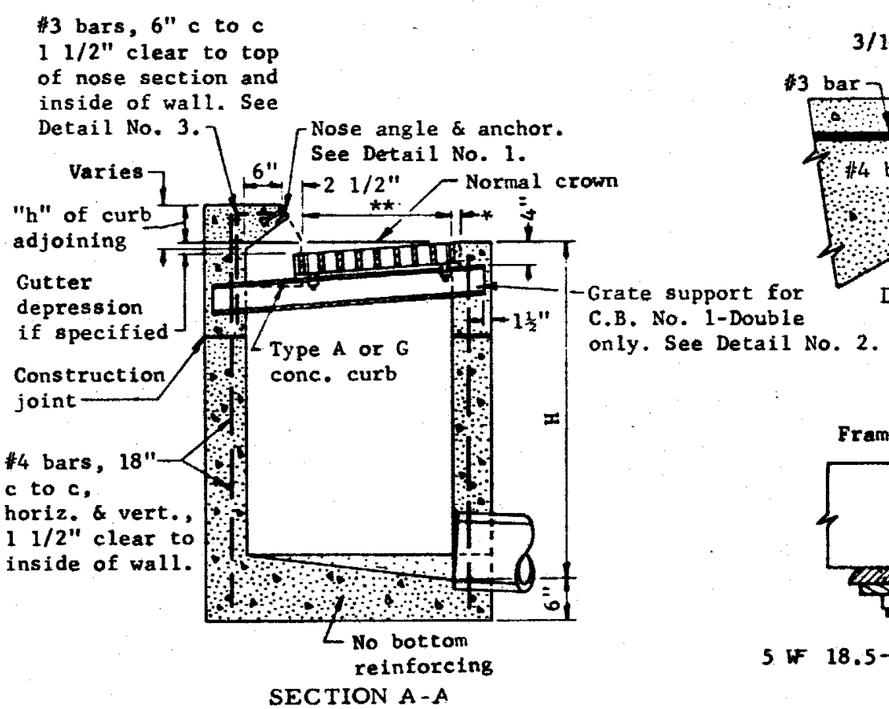

SECTION A-A

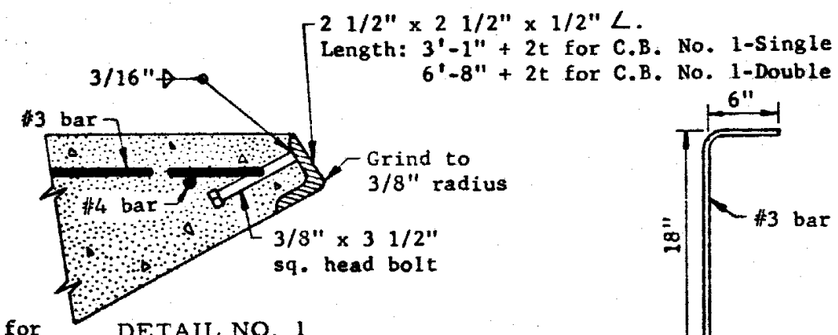

DETAIL NO. 1

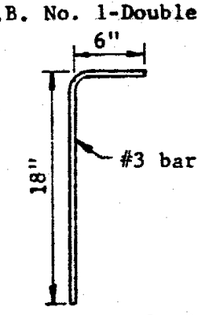

DETAIL NO. 3

NOTE: Provide Std. C-15.08 Construction Drain.

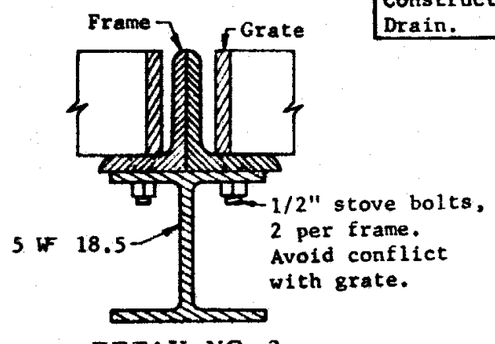

DETAIL NO. 2

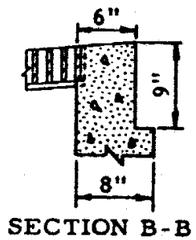

SECTION B-B

Use this section when t = 8"

ARIZONA HIGHWAY DEPARTMENT PLANS DIVISION			Rev 12-5-68
TYPE 1 CATCH BASIN			
Drawn	D.G. 7-67	Drawing No.	
Traced	R.A.F. 7-67	C-15.01	
Checked	J.P.O. JPO 5-68		
Approved Engr. Plans	G Heidecker 5-68		

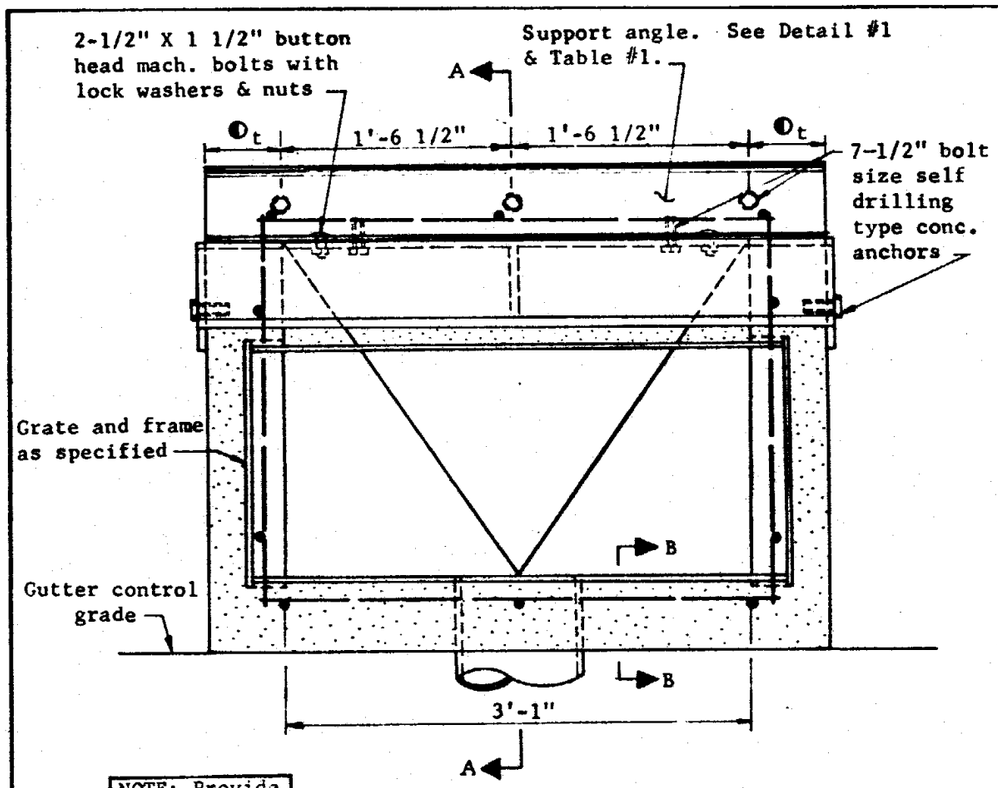

NOTE: Provide Std. C-15.08 Construction Drain.

PLAN

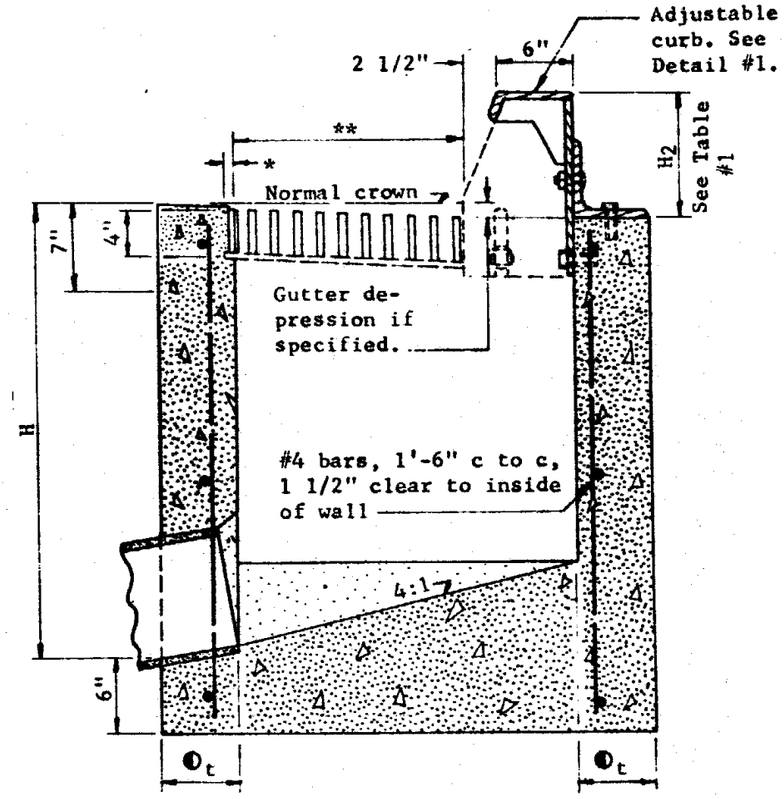

SECTION A-A

GENERAL NOTES

Pipes can be placed in any wall.

1/2" chamfer top edges of sump walls.

Basin sump floors shall have wood trowel finish and a minimum slope of 4:1 from all directions toward outlet pipe.

Welding shall be in accordance with A.H.D. Welding Specifications.

For grates LW-1, TW-2, etc. and frame details and opening areas, see Stds. C-15.06 and C-15.07.

Gutter depression = 3" max. modified to 1 1/2" max. for shoulder locations and no depression for adjoining medians.

Any specified gutter and apron depression shall be warped to opening according to Standard C-15.08.

All concrete shall be Class A.

All Structural steel shall be ASTM A 36.

Adjustable Curb shall be galvanized according to ASTM A 123.

* 3/4" for LW or LB grates.
3" for TW or TB grates.

** 2'-0" for LW-1, LB-1, TW-1 or TB-1 grates. 1'-6" for LW-2, LB-2, TW-2 or TB-2 grates. Use 1'-6" dimension when catch basin is used with combined curb and gutter.

◐ t = 6" when H is 8' or less; 8" when H is over 8'. (See Sect. B-B)

TABLE #1

H_2	Support Angle size
4 1/16" to 8 3/16"	4"X4"X3/8"
8 1/4" to 9 3/16"	5"X5"X3/8"
9 1/4" to 10 1/16"	6"X6"X3/8"

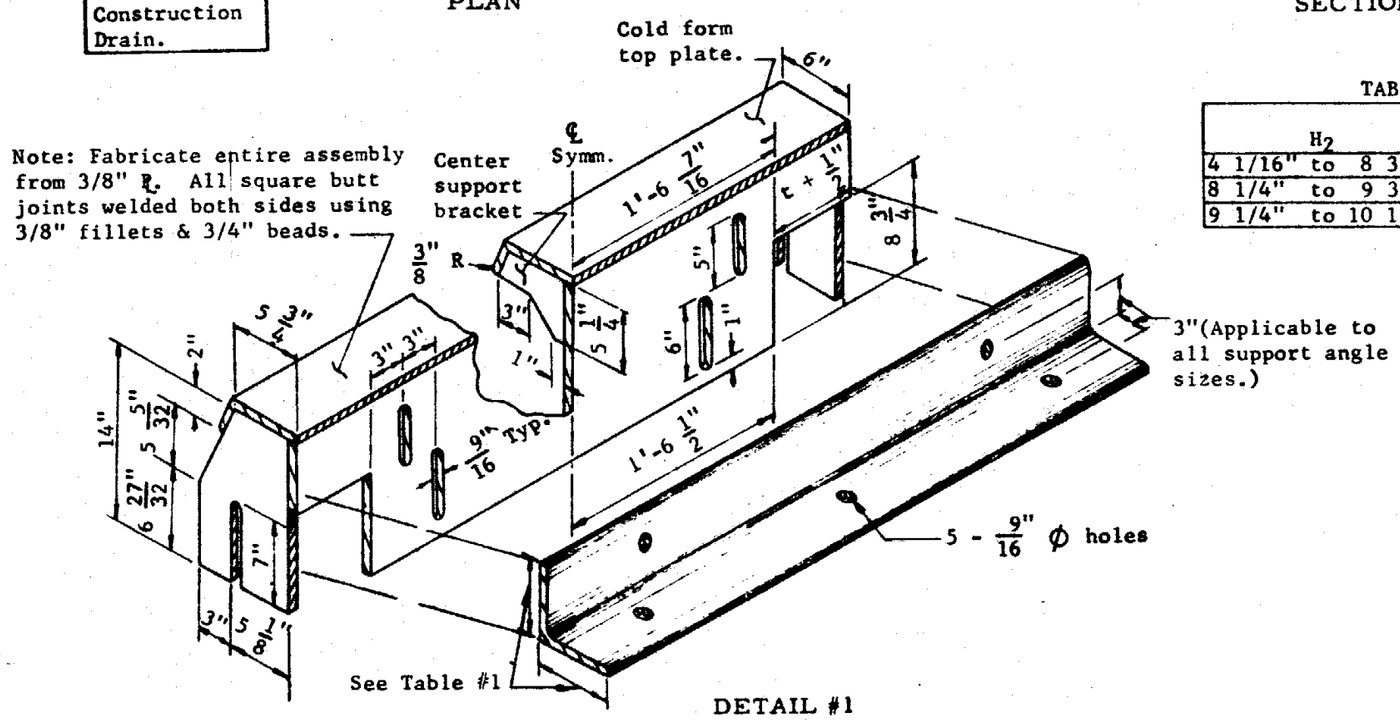

DETAIL #1
ADJUSTABLE CURB ASSEMBLY

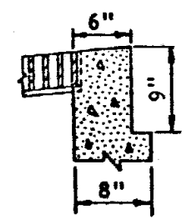

SECTION B-B

ARIZONA HIGHWAY DEPARTMENT
PLANS DIVISION

Rev 12-5-68

TYPE 2 CATCH BASIN

Drawn	D.G.	11-66	Drawing No.
Traced	S.L.T.	6-67	C-15.02
Checked	J.P.O.	JPO 5-68	
Approved Engr. Plans	[signature]	5-68	

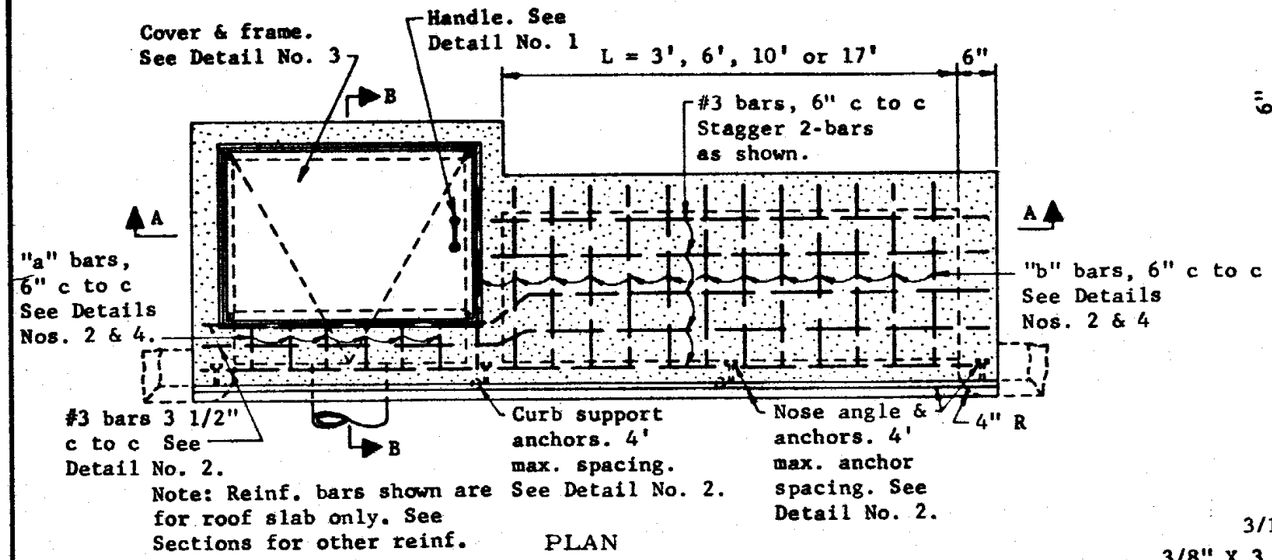

Note: Reinf. bars shown are for roof slab only. See Sections for other reinf.

PLAN

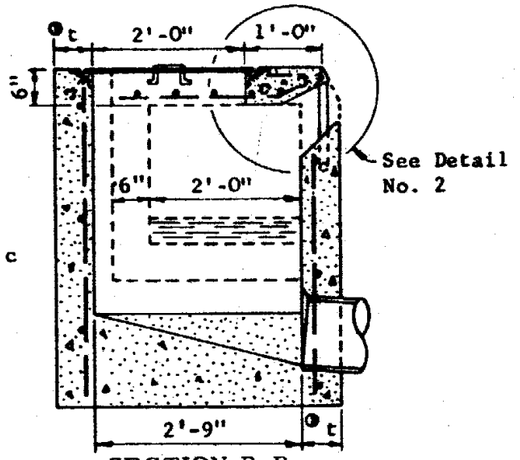

SECTION B-B

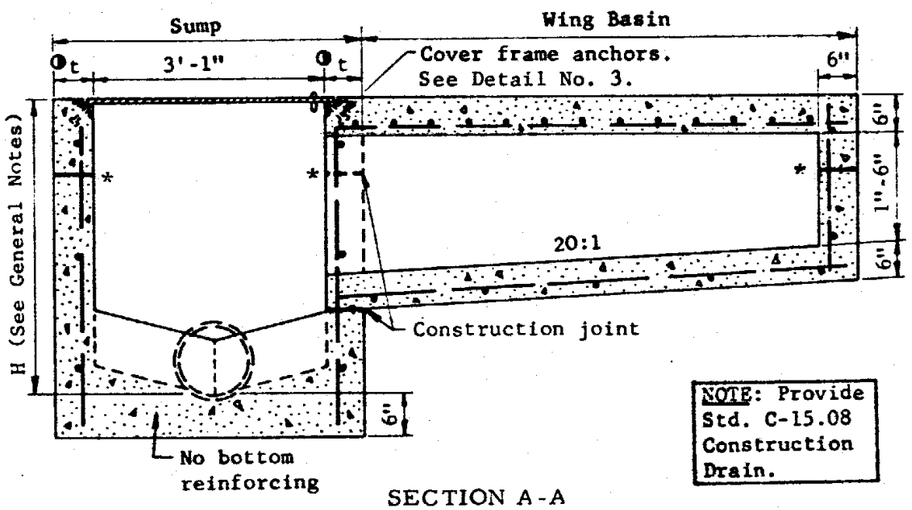

SECTION A-A

NOTE: Provide Std. C-15.08 Construction Drain.

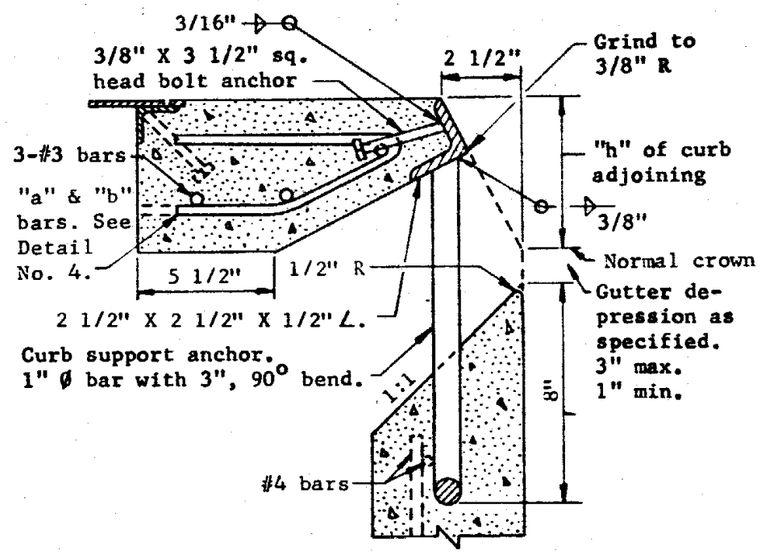

DETAIL NO. 2

GENERAL NOTES

C.B. 3 sump only.

C.B. 3-Wing (illustrated), sump with wing basin upstream.

C.B. 3-Double Wing, sump with symmetrical wing basins each side.

Pipes can be placed in any wall except wall adjacent to a wing basin.

Sump floor shall have a wood trowel finish and a minimum slope of 4:1 in all directions toward outlet pipe.

Gutter depression shall be warped to opening according to Std. C-15.08.

All structural steel shall be ASTM A 36.

Nose angle shall be given one shop coat of No. 1 paint.

All concrete shall be class A.

All reinforcing bars shall be #4, 1'-6" c to c both ways and 1 1/2" clear to inside of walls and outside of wing basin floor except as shown.

Curb opening area (Sq. Ft.) per inch of curb "h" + gutter depression = curb opening length (ft.) x 0.0834.

Welding shall be in accordance with A.H.D. Welding Specifications.

* Construction joints at bottom of curb line.

Ⓞ t = 6" when H = 8' or less
8" when H is greater than 8'.

H = 2'-10" min. when L = 3'
3'- 0" min. when L = 6'
3'- 2" min. when L = 10'
3'- 7" min. when L = 17'

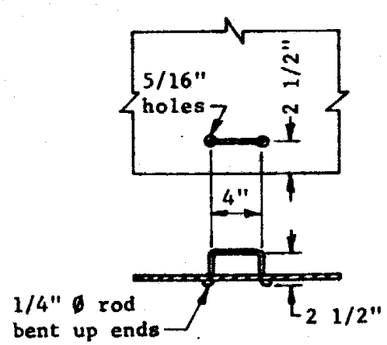

DETAIL NO. 1

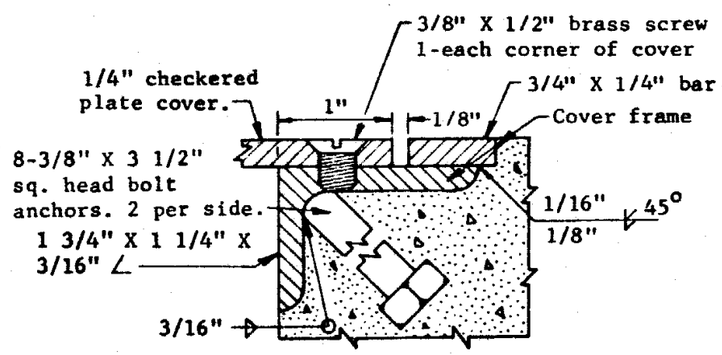

DETAIL NO. 3

Miter frame sections 45° butt weld and surface grind.

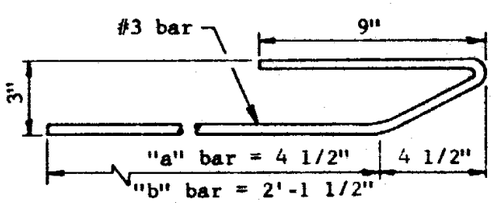

DETAIL NO. 4

ARIZONA HIGHWAY DEPARTMENT
PLANS DIVISION

TYPE 3 CATCH BASIN

Rev 12-2-68

Drawn	D.G. 7-67	Drawing No.
Traced	R.A.F. 7-67	C-15.03
Checked	J.P.O. JPO 5-68	
Approved Engr. Plans	[illegible] 5-68	

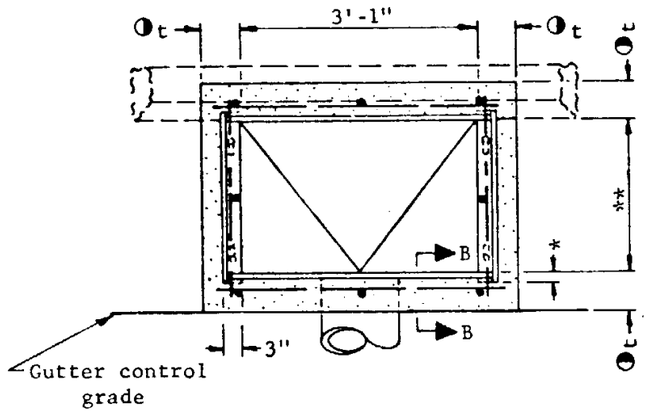

PLAN, CATCH BASIN NO. 4-SINGLE

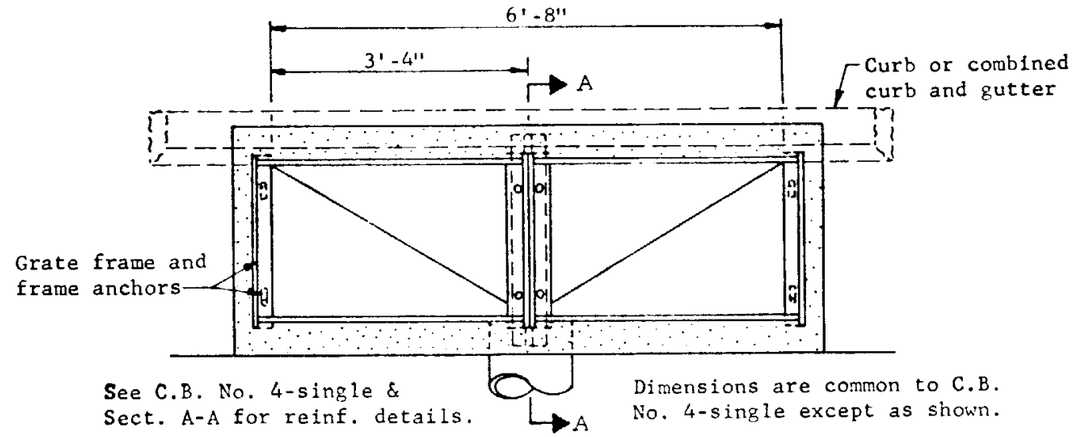

PLAN, CATCH BASIN NO. 4-DOUBLE

GENERAL NOTES

Pipes can be placed in any wall.

Sump floor shall have a wood trowel finish and a minimum slope of 4:1 in all directions toward outlet pipe.

Curb over catch basin shall not be constructed until catch basin concrete has set for a minimum of 24 hours.

For grate and frame details and opening areas, see Stds. C-15.06 and C-15.07.

Any specified gutter depression shall be warped to opening according to Std. C-15.08.

All structural steel shall be ASTM A 36.

Grate support shall be given one shop coat of No. 1 paint.

All concrete shall be Class A.

* 3/4" for LW or LB grates.
3" for TW or TB grates.

** 2'-0" for LW-1, LB-1, TW-1 and TB-1 grates. 1'-6" for LW-2, LB-2, TW-2 and TB-2 grates. Use 1'-6" dimension when catch basin is used with combined curb and gutter.

◑ t = 6" when H = 8' or less
8" when H is greater than 8'. (See Section B-B)

NOTE: Provide Std. C-15.08 Construction Drain.

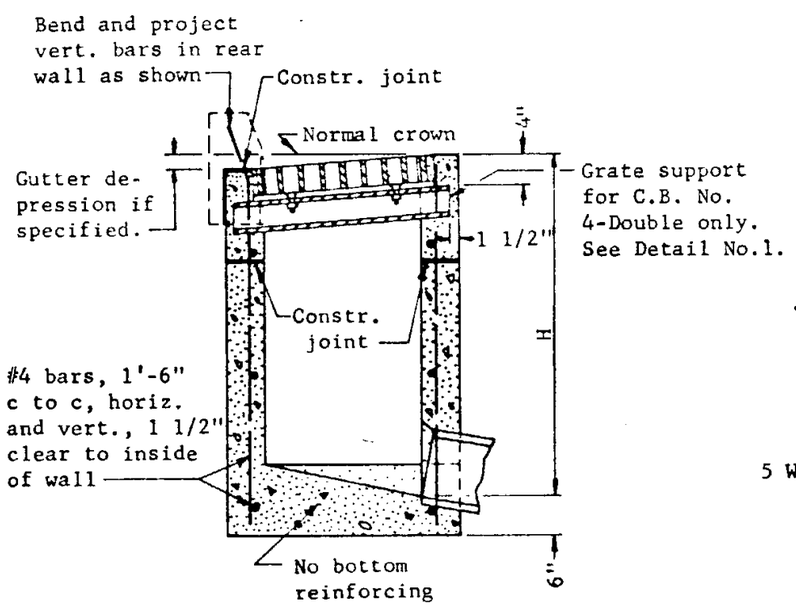

SECTION A-A

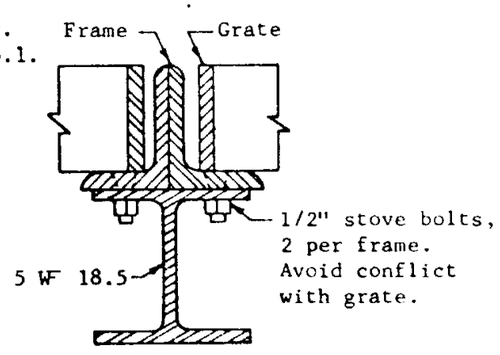

DETAIL NO. 1

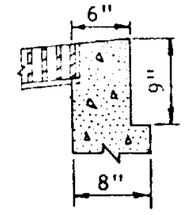

SECTION B-B

Use this section when t = 8"

ARIZONA HIGHWAY DEPARTMENT PLANS DIVISION			Rev
TYPE 4 CATCH BASIN			
Drawn	D.G. 6-67	Drawing No.	
Traced	S.L.T. 7-67		
Checked	J.P.O. JPO 5-68	C-15.04	
Approved Engr. Plans	[signature] 5-68		

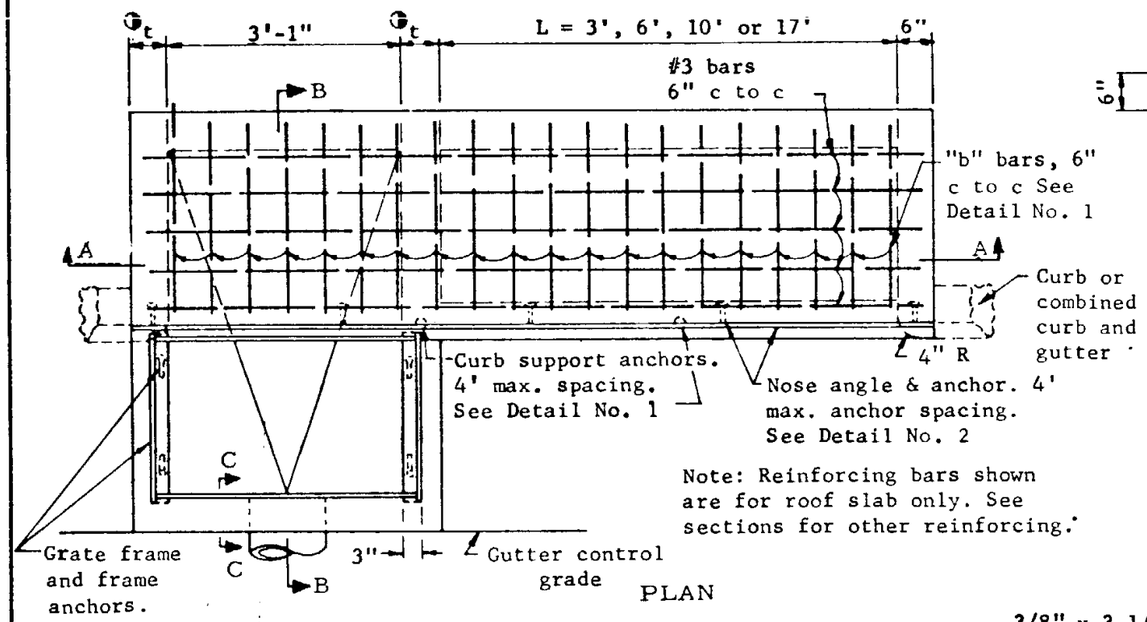

PLAN

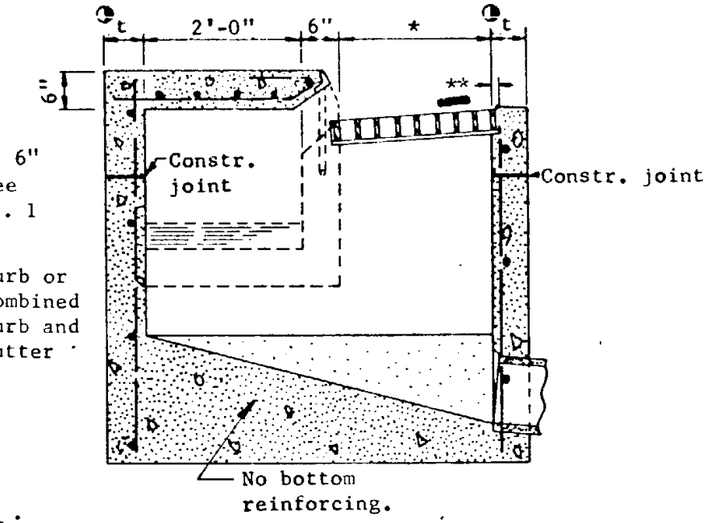

SECTION B-B

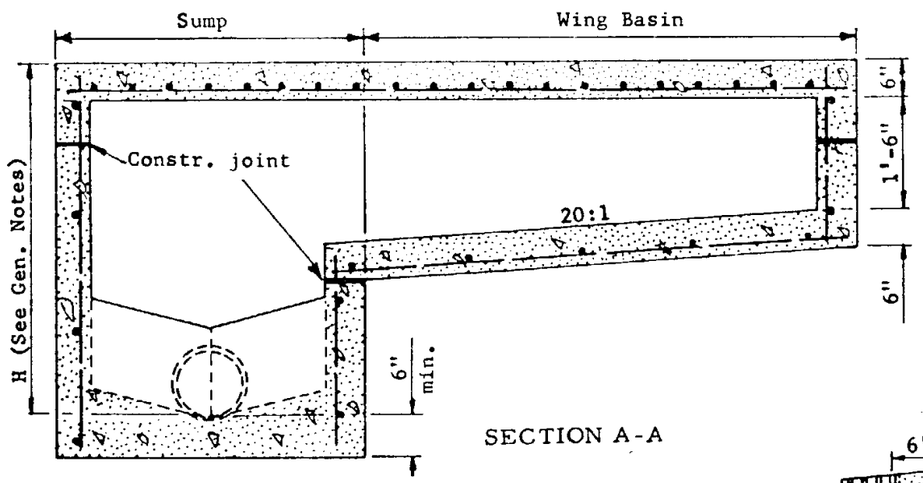

SECTION A-A

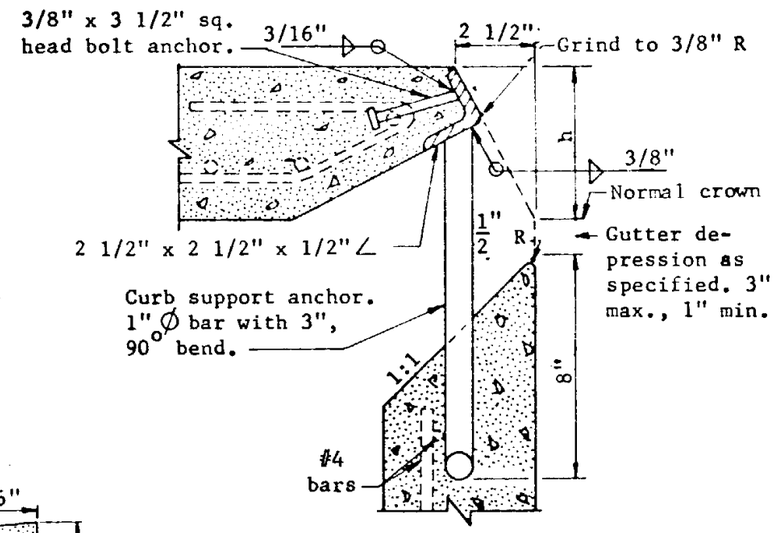

DETAIL NO. 2

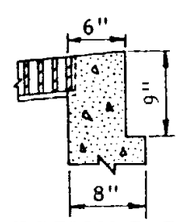

SECTION C-C
Use this section when t = 8"

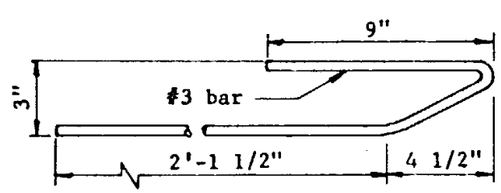

DETAIL NO. 1

NOTE: Provide Std. C-15.08 Construction Drain.

GENERAL NOTES

C.B. 5, sump only.

C.B. 5 Single, (illustrated), sump with wing basin upstream.

C.B. 5 Double, sump with symmetrical wing basins each side.

Pipes can be placed in any wall except wall adjacent to a wing basin.

Sump floor shall have a wood trowel finish and a minimum slope of 4:1 in all directions toward outlet pipe.

Welding shall be in accordance with A.H.D. Welding Specifications.

Gutter depression shall be warped to opening according to Std. C-15.08.

All structural steel shall be in accordance with ASTM A 36.

Nose angle shall be painted with one No. 1 shop coat.

All concrete shall be Class A.

All reinforcing bars shall be #4, 18" c to c both ways and 1 1/2" clear to inside of walls and outside of wing basin floor except as shown.

Curb opening area (Sq. Ft.) per inch of curb "h" + gutter depression = curb opening length (Ft.) X 0.0834.

For grate and frame details and opening areas, see Stds. C-15.06 and C-15.07.

◑t = 6" when H = 8' or less; 8" when H is greater than 8'. (See Section C-C)

*2'-0" for LW-1 and LB-1 grates; 1'-6" for LW-2 and LB-2 grates. Use 1'-6" dimension when catch basin is used with combined curb and gutter.

** 3/4" for longitudinal and 3" for transverse grates.

H = 3'-3" min. when L = 3'
3'-5" min. when L = 6'
3'-7" min. when L = 10'
4'-0" min. when L = 17'

ARIZONA HIGHWAY DEPARTMENT
PLANS DIVISION

Rev 12-5-68 9-29-70

TYPE 5 CATCH BASIN

Drawn	D.G. 7-67	Drawing No.
Traced	S.L.T. 7-67	C-15.05
Checked	J.P.O. JPO 5-68	
Approved Engr. Plans	[signature] 5-68	

ARIZONA HIGHWAY DEPARTMENT

OFFICE MEMO

September 30, 1970

TO: All Holders of 1969 Construction Standards

FROM: GRANT HEIDECKER
Engineer of Plans

SUBJECT: Revision of Standard C-15.05

Existing 3/4" grate support dimension has been revised to: 3/4" for LW or LB grates; 3" for TW or TB grates.

Revision is effective immediately.

GRANT HEIDECKER
Engineer of Plans

GH:sd

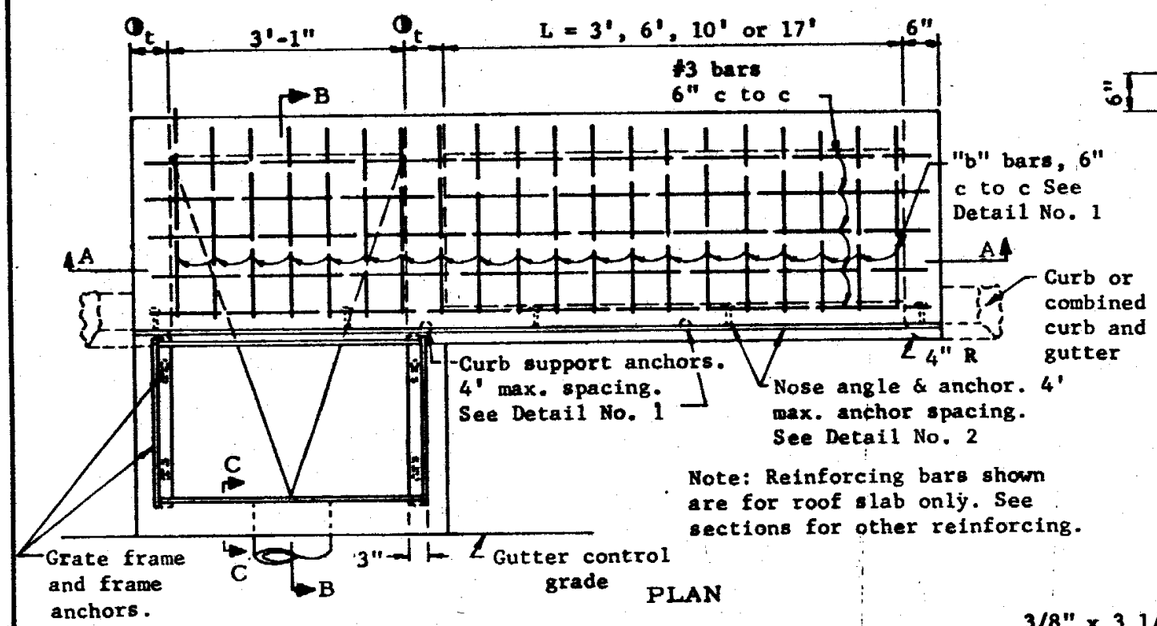

PLAN

Note: Reinforcing bars shown are for roof slab only. See sections for other reinforcing.

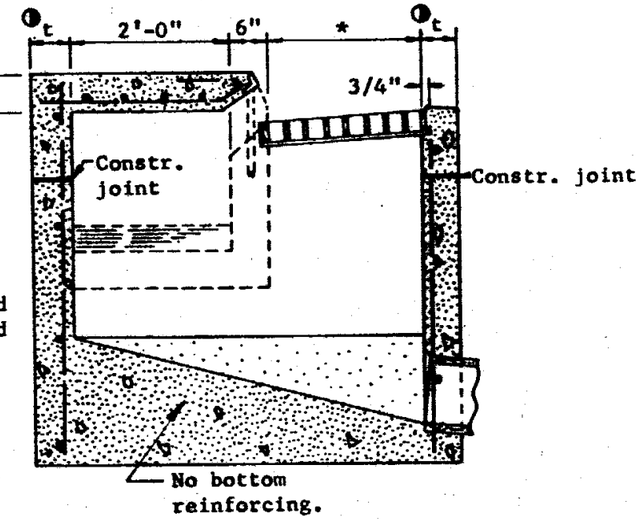

SECTION B-B

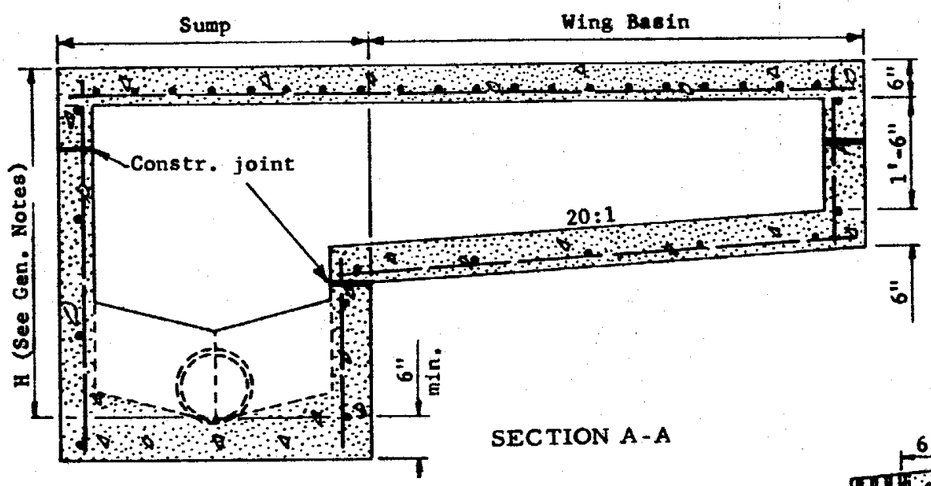

SECTION A-A

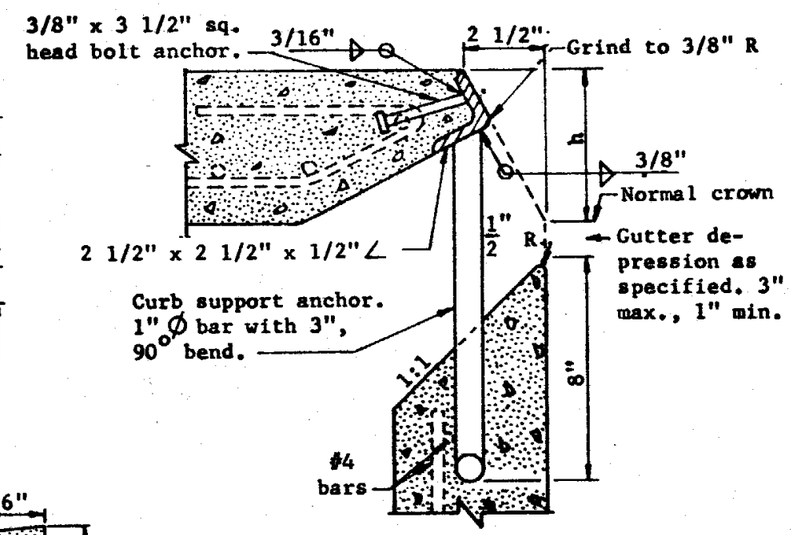

DETAIL NO. 2

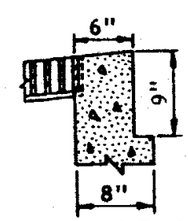

SECTION C-C
Use this section when t = 8"

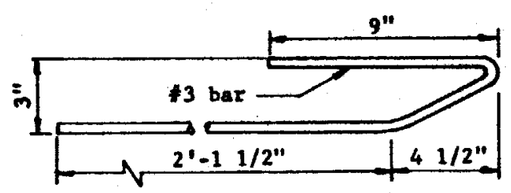

DETAIL NO. 1

NOTE: Provide Std. C-15.08 Construction Drain.

GENERAL NOTES

C.B. 5, sump only.

C.B. 5 Single, (illustrated), sump with wing basin upstream.

C.B. 5 Double, sump with symmetrical wing basins each side.

Pipes can be placed in any wall except wall adjacent to a wing basin.

Sump floor shall have a wood trowel finish and a minimum slope of 4:1 in all directions toward outlet pipe.

Welding shall be in accordance with A.H.D. Welding Specifications.

Gutter depression shall be warped to opening according to Std. C-15.08.

All structural steel shall be in accordance with ASTM A 36.

Nose angle shall be painted with one No. 1 shop coat.

All concrete shall be Class A.

All reinforcing bars shall be #4, 18" c to c both ways and 1 1/2" clear to inside of walls and outside of wing basin floor except as shown.

Curb opening area (Sq. Ft.) per inch of curb "h" + gutter depression = curb opening length (Ft.) X 0.0834.

For grate and frame details and opening areas, see Stds. C-15.06 and C-15.07.

Ⓣt = 6" when H = 8' or less; 8" when H is greater than 8'. (See Section C-C)

*2'-0" for LW-1 and LB-1 grates; 1'-6" for LW-2 and LB-2 grates. Use 1'-6" dimension when catch basin is used with combined curb and gutter.

H = 3'-3" min. when L = 3'
3'-5" min. when L = 6'
3'-7" min. when L = 10'
4'-0" min. when L = 17'

ARIZONA HIGHWAY DEPARTMENT
PLANS DIVISION

Rev 12-5-68

TYPE 5 CATCH BASIN

Drawn	D.G. 7-67	Drawing No.
Traced	S.L.T. 7-67	C-15.05
Checked	J.P.O. JPO 5-68	
Approved Engr. Plans	Heidecker 5-68	

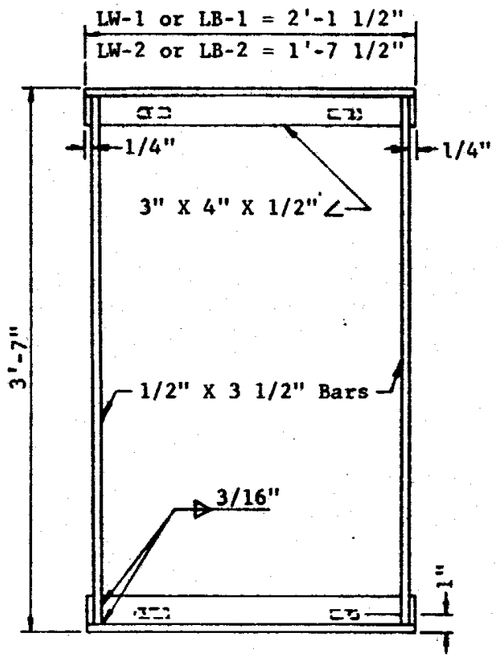

PLAN

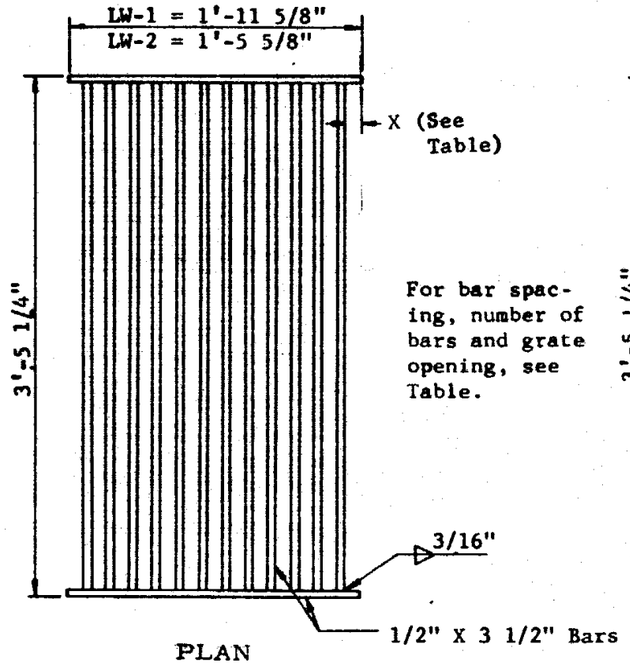

PLAN

For bar spacing, number of bars and grate opening, see Table.

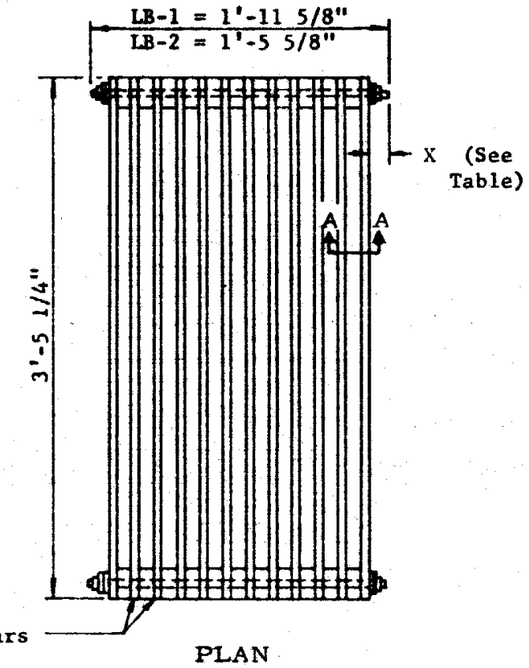

PLAN

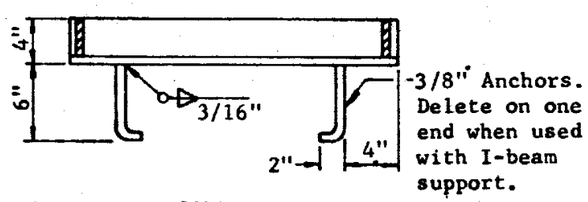

SECTION

FRAME

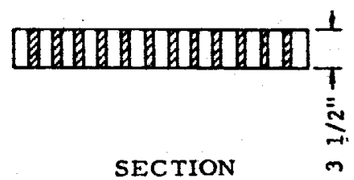

SECTION

GRATE TYPES LW-1 & LW-2

Restricted to use on longitudinal grades of 3% and less.

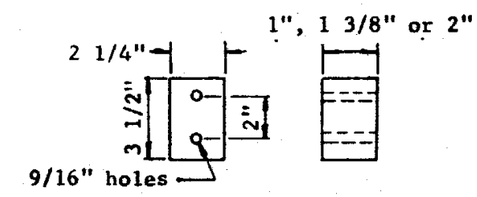

BAR SPACER DETAIL
Cast iron, cast steel or steel bar stock.

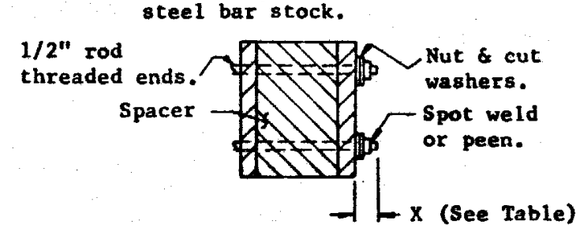

SECTION A-A

GRATE TYPES LB-1 & LB-2

For use on longitudinal grades in excess of 3% or as an alternate to Type LW on grades of 3% or less.

Type	Clear Spacing	No. Bars	X	Grate Opening Sq. Ft.
LW or LB-1.0	1"	16	5/16"	4.58
LW or LB-1.1	1 3/8"	12	1 1/4"	4.99
LW or LB-1.2	2"	9	1 9/16"	5.41
LW or LB-2.0	1"	12	5/16"	3.47
LW or LB-2.1	1 3/8"	9	1 1/16"	3.75
LW or LB-2.2	2"	7	1 1/16"	4.03

GENERAL NOTES

Grating units and frames shall be fabricated from structural steel except as noted. Structural steel shall be in accordance with ASTM A 36.

Welding shall be in accordance with A.H.D. Welding Specifications.

The completed assembly shall be given one shop coat of No. 1 paint.

LW indicates longitudinal welded.
LB indicates longitudinal bolted.

ARIZONA HIGHWAY DEPARTMENT
PLANS DIVISION

Rev 12-5-68

CATCH BASIN GRATE LB AND LW GRATES

Drawn	D.G. 7-66	Drawing No.
Traced	S.L.T. 7-67	
Checked	J.P.O. JPO 5-68	C-15.06
Approved Engr. Plans	J Weidenbach 5-68	

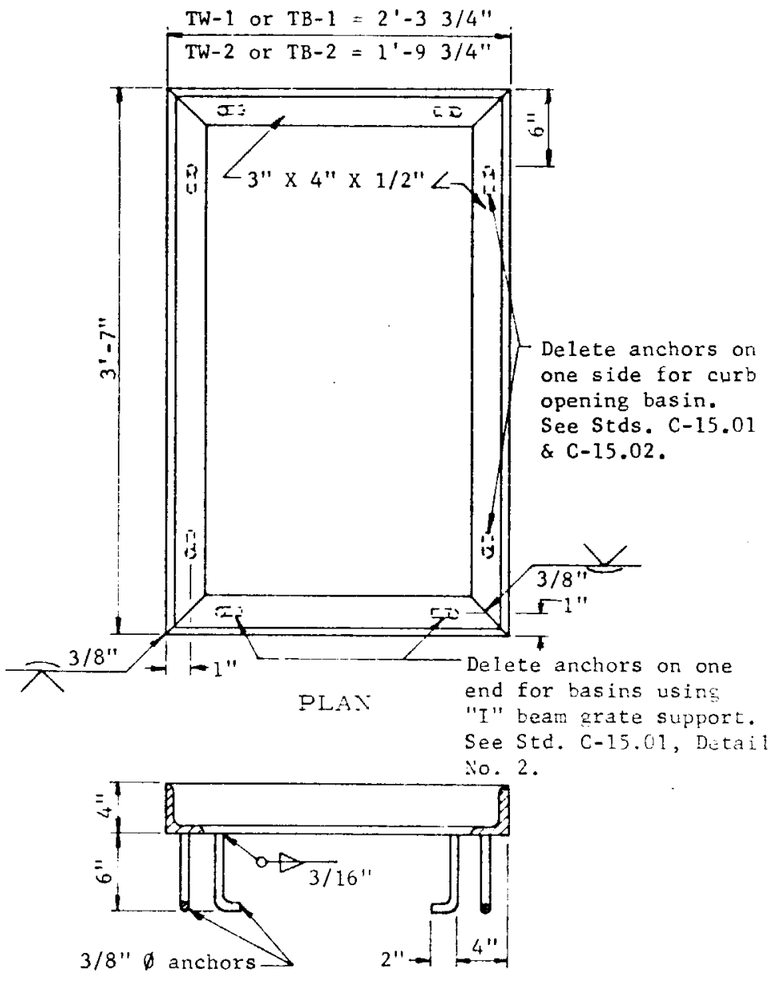

PLAN

SECTION

FRAME

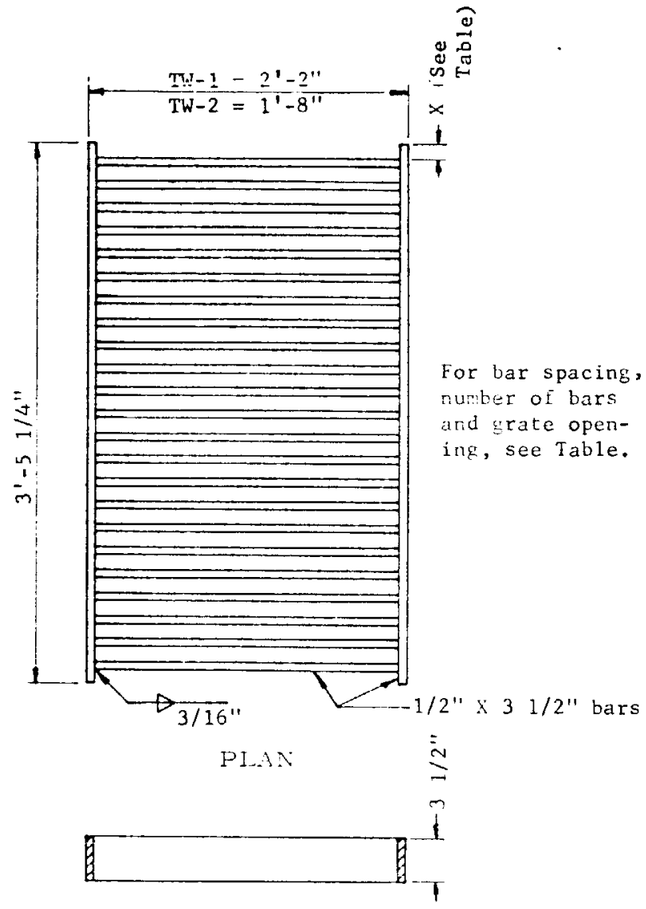

PLAN

SECTION

GRATE TYPES TW-1 & TW-2

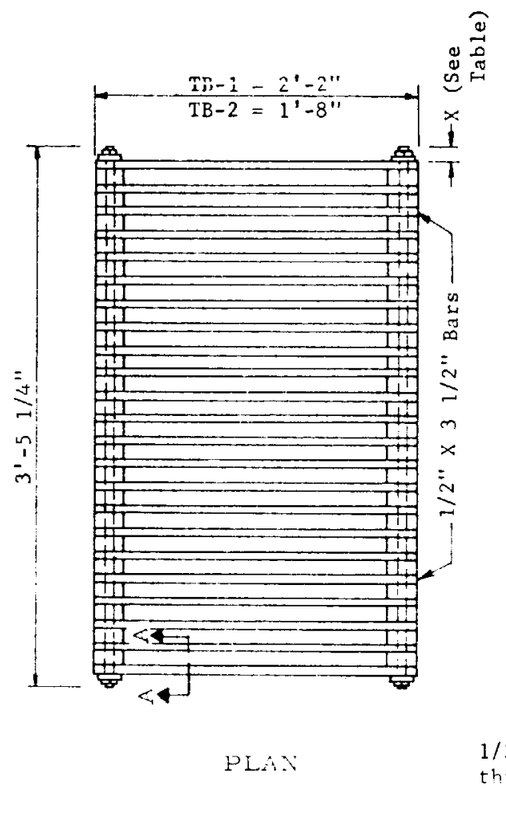

PLAN

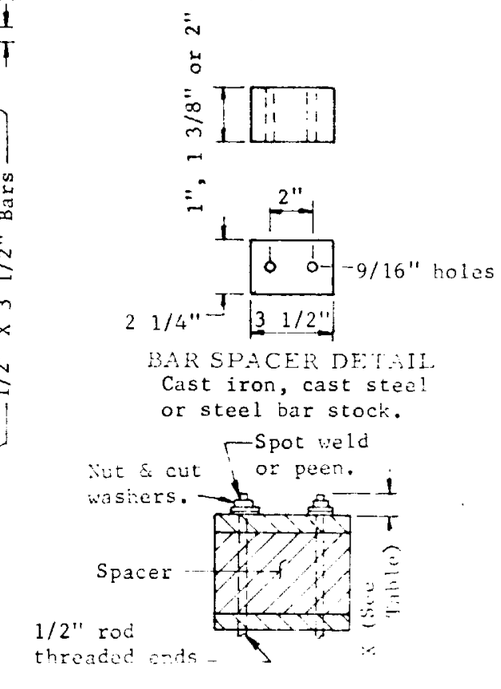

BAR SPACER DETAIL
Cast iron, cast steel or steel bar stock.

SECTION A-A

GRATE TYPES TB-1 & TB-2

Type	Clear Spacing	No. Bars	X	Grate Opening Sq. Ft.
TW or TB-1.0	1"	28	7/8"	3.47
TW or TB-1.1	1 3/8"	22	11/16"	3.93
TW or TB-1.2	2"	16	1 5/8"	4.31
TW or TB-2.0	1"	28	7/8"	2.51
TW or TB-2.1	1 3/8"	22	11/16"	2.83
TW or TB-2.2	2"	16	1 5/8"	3.11

GENERAL NOTES

Grating units and frames shall be fabricated from structural steel except as noted. Structural steel shall be in accordance with ASTM A 36.

Welding shall be in accordance with A.H.D. Welding Specifications.

The completed assembly shall be given one shop coat of No. 1 paint.

TW indicates transverse welded.
TB indicates transverse bolted.

ARIZONA HIGHWAY DEPARTMENT
PLANS DIVISION

Rev 2-5-68

CATCH BASIN GRATE TB AND TW GRATES

Drawn	D.G. 6-67	Drawing No.
Traced	S.L.T. 7-67	
Checked	J.P.O. JPO 5-68	C-15.07
Approved Engr. Plans	Skidmore 5-68	

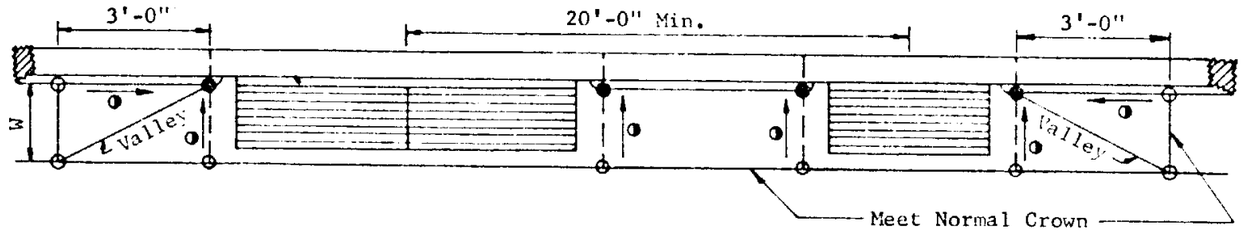

CATCH BASIN TYPES 1, 2, 4-SINGLE, 4-DOUBLE & 5-SINGLE
(Grate opening only or combination; showing minimum spacing for Catch Basins in series.)

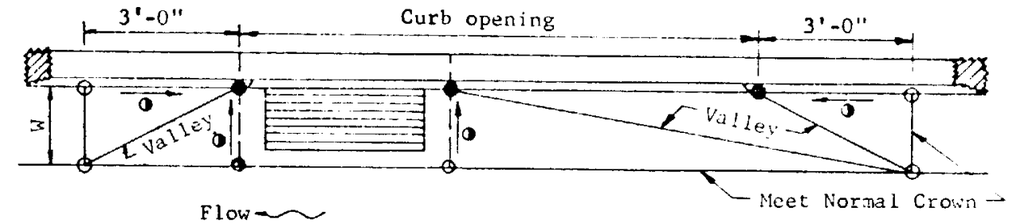

CATCH BASIN TYPES 5-SINGLE & 5-DOUBLE

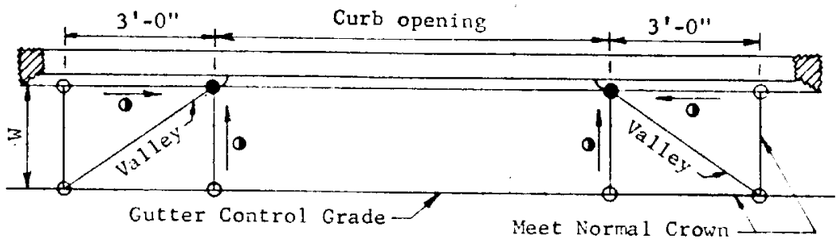

CATCH BASIN TYPE 3
(Curb opening only.)

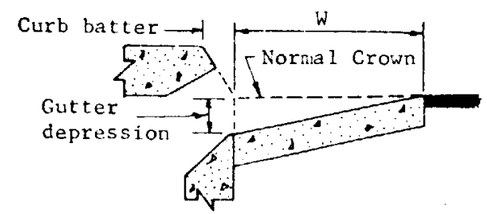

DETAIL NO. 1

LEGEND
Gutter depression: 3" max. (See Detail No. 1)
O = Normal crown or gutter flow line elevation.
● = Depressed elevation.
◑ = Straight grade with downward slope.
W = Normal gutter width per Std. C-5.01

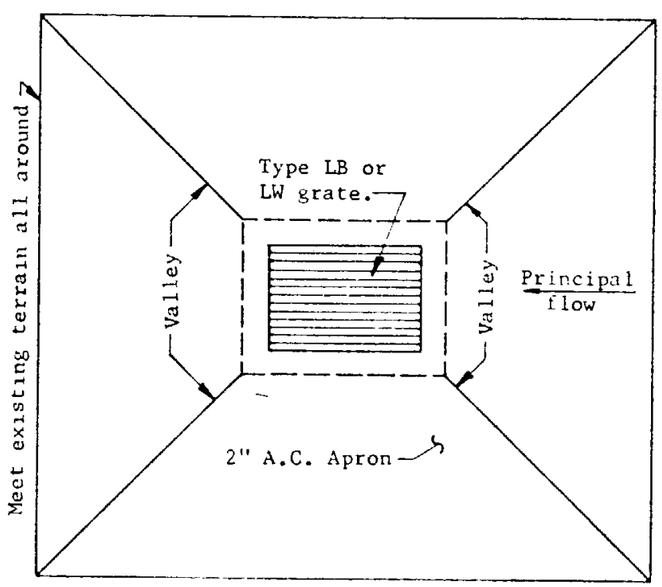

Apron shall be shaped to suit local conditions and shall extend a minimum of 4'-0" from edge of grate in all directions. Grate shall be depressed a minimum of 4" below surrounding terrain and bars shall parallel direction of principal flow.

CATCH BASIN TYPE 4
(Off roadway location)

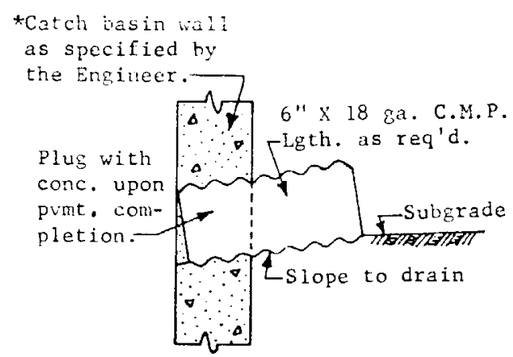

CATCH BASIN
CONSTRUCTION DRAIN
*Drain may be deleted at option of Engineer

GENERAL NOTES
No gutter depression shall be used adjacent to median.

ARIZONA HIGHWAY DEPARTMENT PLANS DIVISION		Rev
CATCH BASIN DEPRESSED APRON & CONSTRUCTION DRAIN		
Drawn	S.L.T. 10-67	Drawing No.
Traced	S.L.T. 10-67	
Checked	J.P.O. 9/10 5-68	C-15.08
Approved Engr. Plans	[illegible] 5-68	

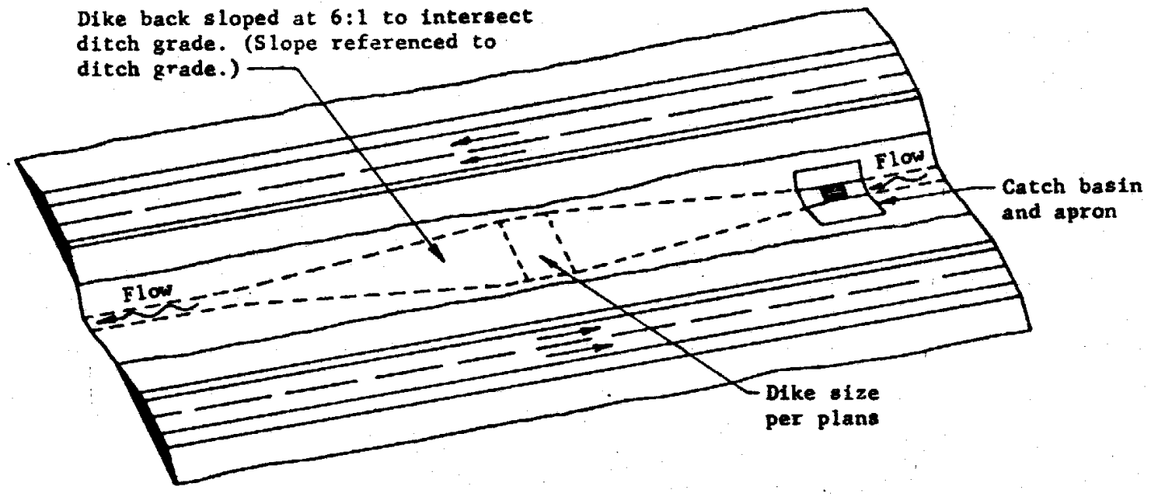

PLAN PERSPECTIVE
ILLUSTRATING 1-WAY FLOW WITH DYKE

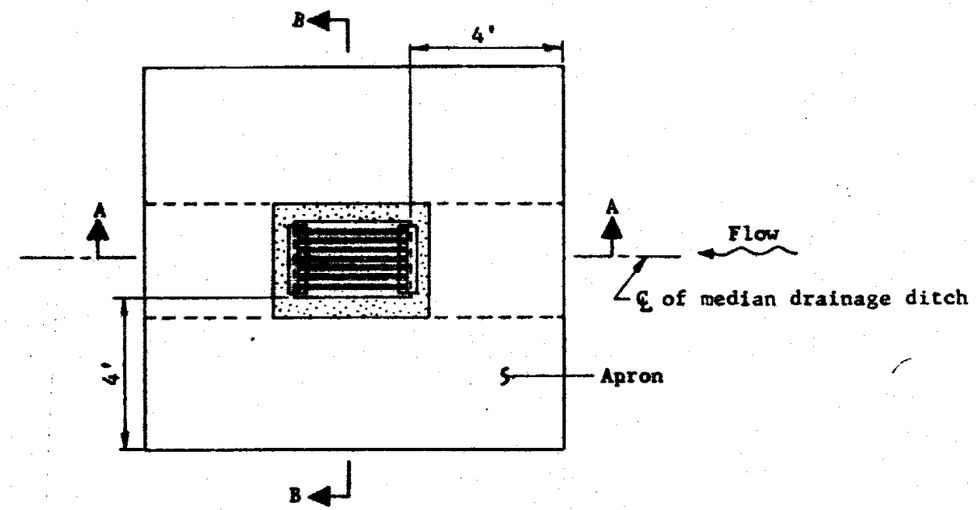

PLAN

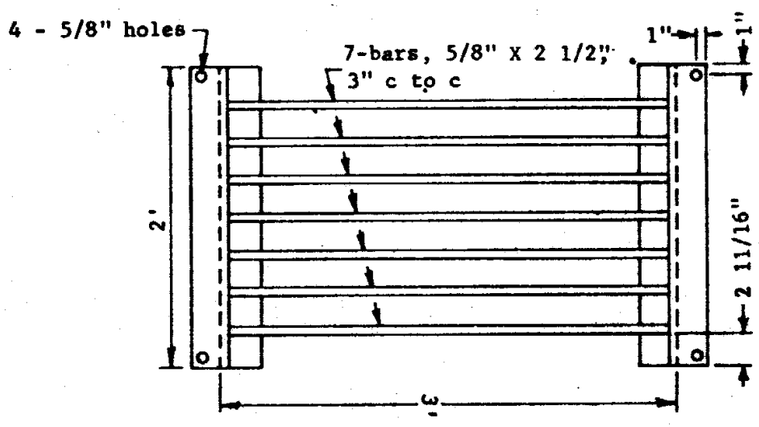

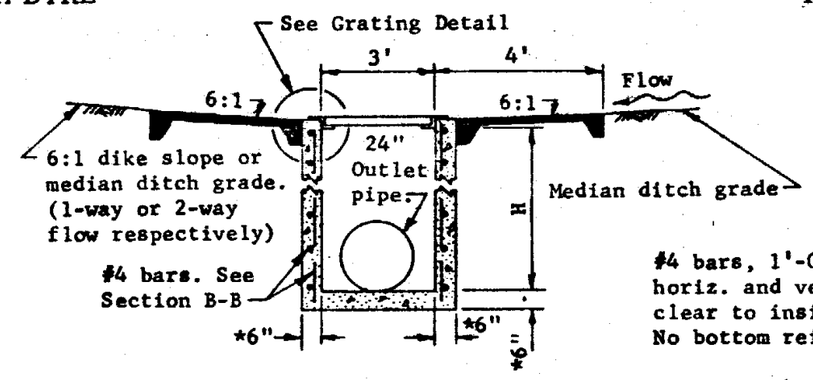

SECTION A-A

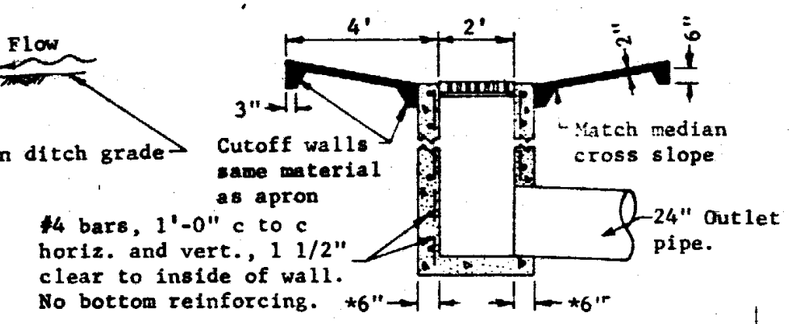

SECTION B-B

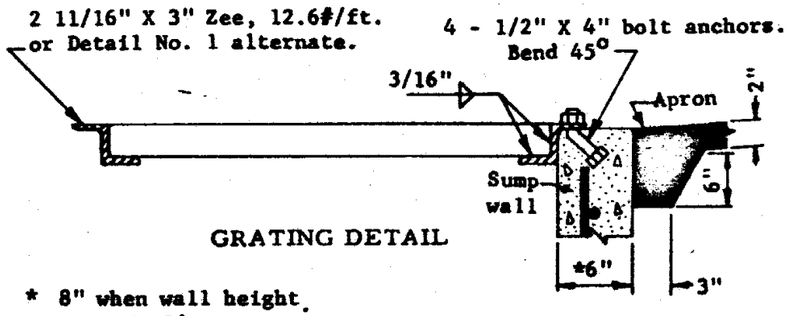

GRATING DETAIL

* 8" when wall height exceeds 8'.

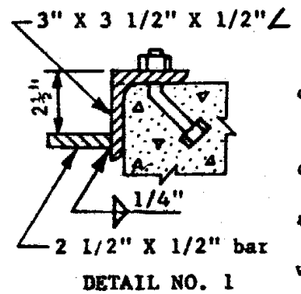

DETAIL NO. 1

GENERAL NOTES

Apron shall be A.C. or P.C. concrete as specified on Plans.

Concrete shall be Class A.

Grating shall be fabricated of structural steel.

Structural steel shall be in accordance with ASTM A 36.

Welding shall be in accordance with A.H.D. Welding Specifications.

Grating assembly shall be given one shop coat of No. 1 paint.

"H" indicated on project Plans.

ARIZONA HIGHWAY DEPARTMENT
PLANS DIVISION

MEDIAN CATCH BASIN

Drawn	D.G. 3-68	Drawing No.
Traced	R.A.F. 3-68	
Checked	J.P.O. JPO 5-68	C-15.09
Approved	[signature]	

Rev 11-21-68 10-6-70

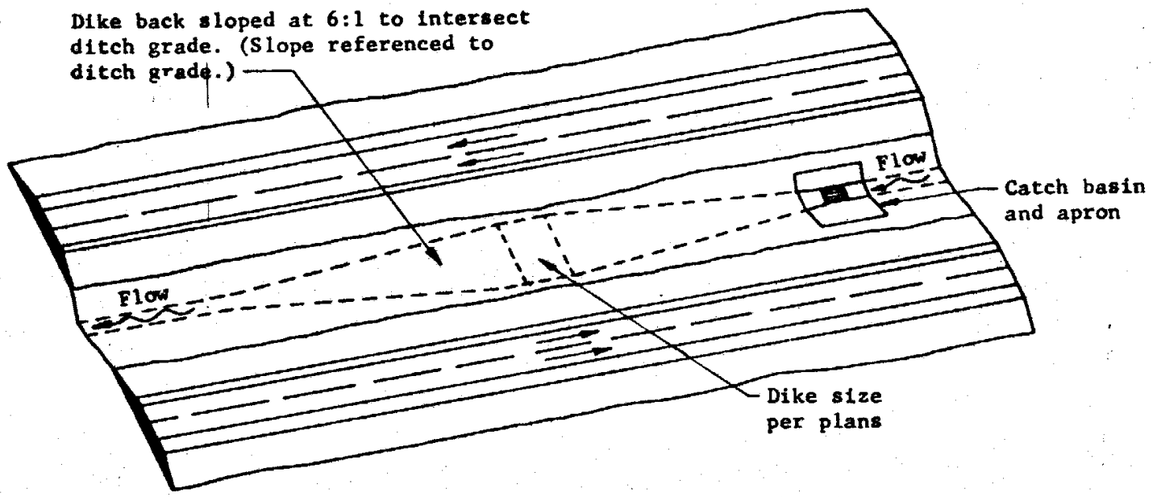

PLAN PERSPECTIVE
ILLUSTRATING 1-WAY FLOW WITH DYKE

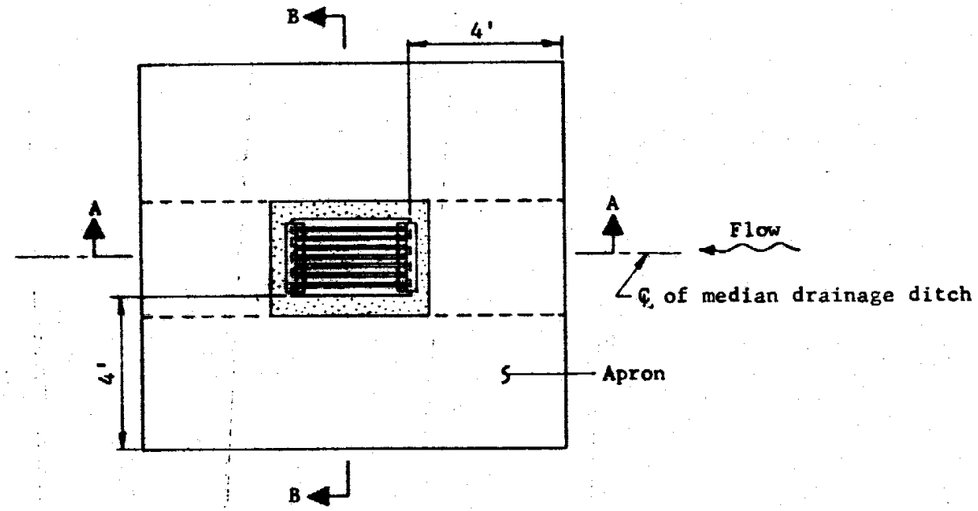

PLAN

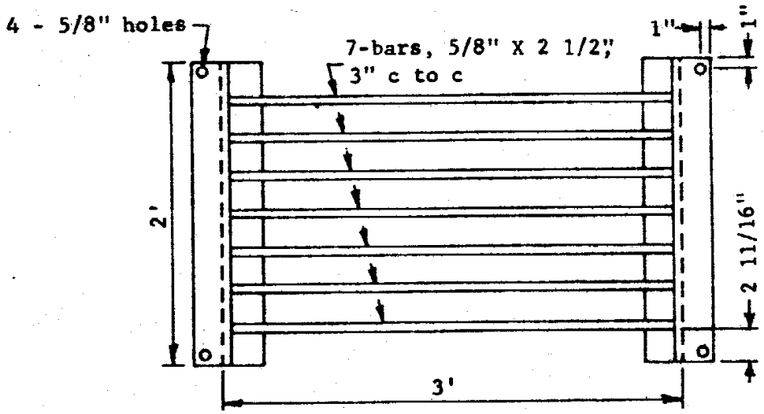

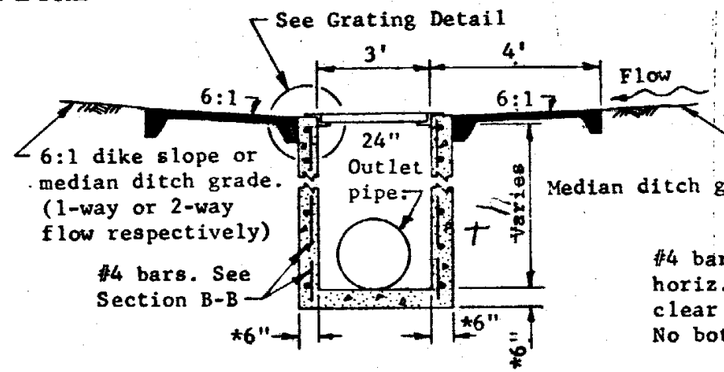

SECTION A-A

+ min 4'
max 9'

h = to be shown on notes

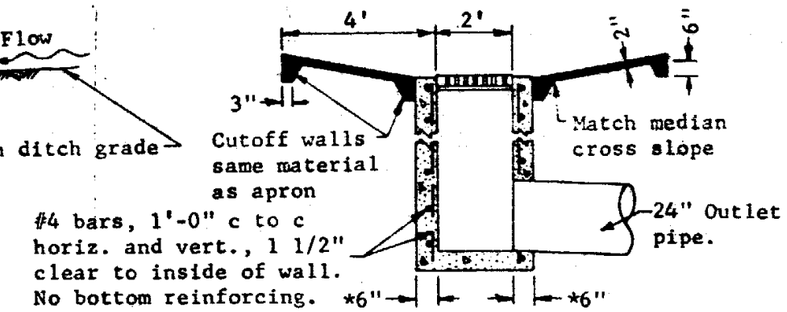

SECTION B-B

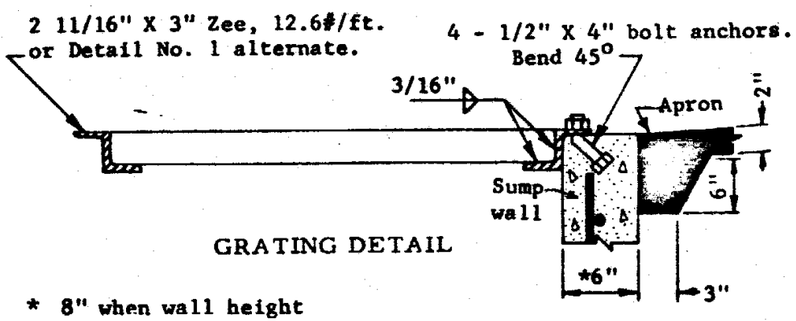

GRATING DETAIL

* 8" when wall height exceeds 8'.

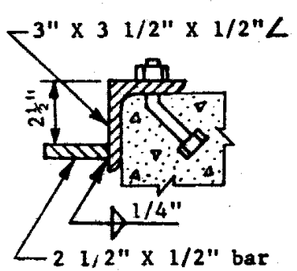

DETAIL NO. 1

GENERAL NOTES

Apron shall be A.C. or P.C. concrete as specified on Plans.

Concrete shall be Class A.

Grating shall be fabricated of structural steel. Structural steel shall be in accordance with ASTM A 36.

Welding shall be in accordance with A.H.D. Welding Specifications.

Grating assembly shall be given one shop coat of No. 1 paint.

ARIZONA HIGHWAY DEPARTMENT
PLANS DIVISION

Rev 11-21-68

MEDIAN CATCH BASIN

Drawn	D.G. 3-68	Drawing No.
Traced	R.A.F. 3-68	C-15.09
Checked	J.P.O. JPO 5-68	
Approved Engr. Plans	G Heidecker 5-68	

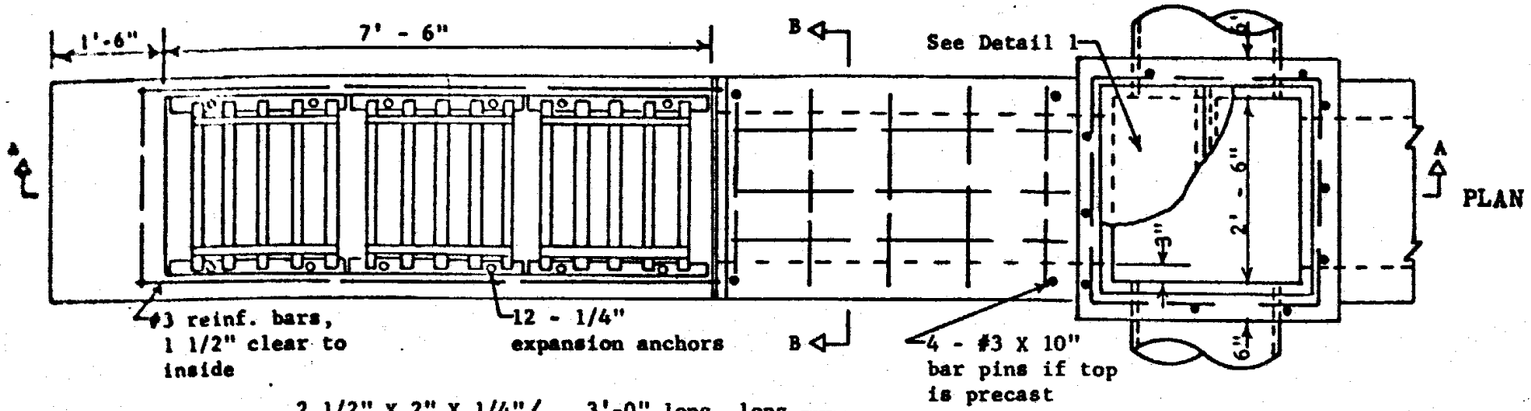

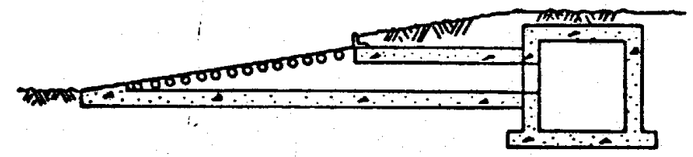

INLET TO BOX CULVERT

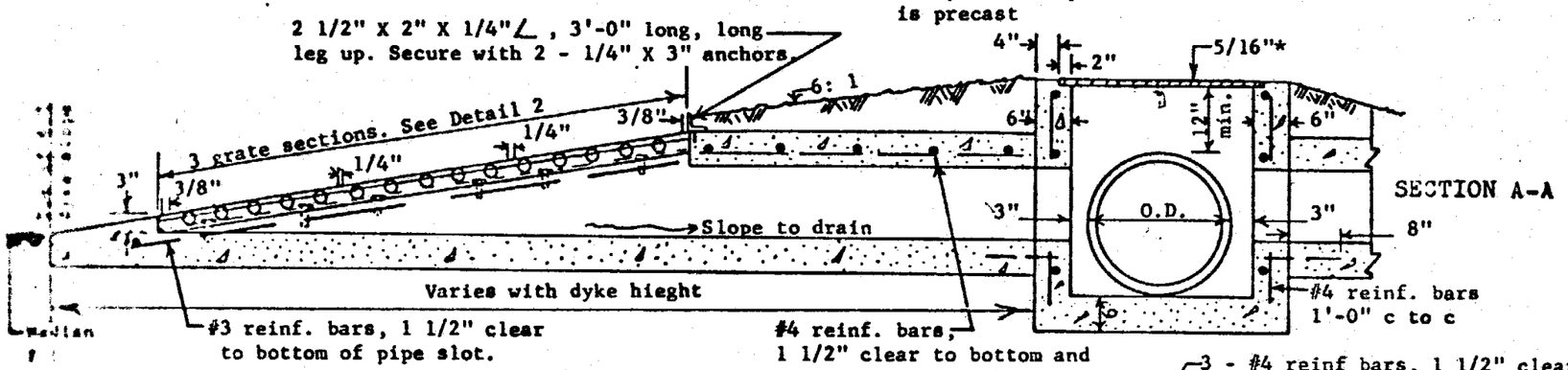

SECTION A-A

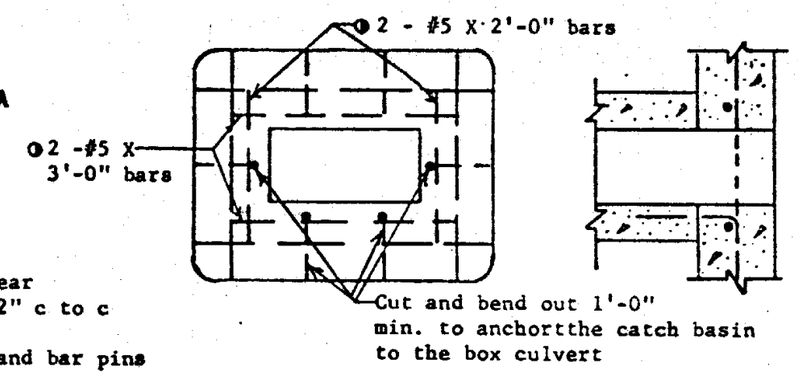

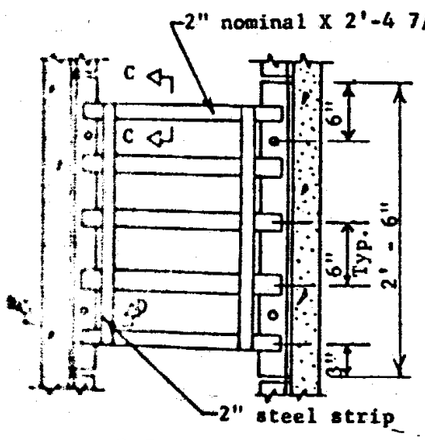

DETAIL 2

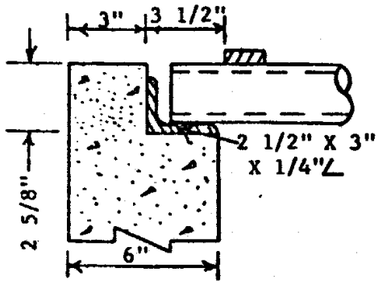

SECTION D-D

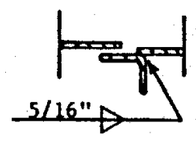

SECTION E-E

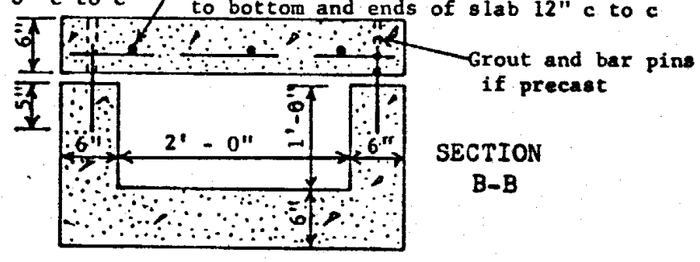

SECTION B-B

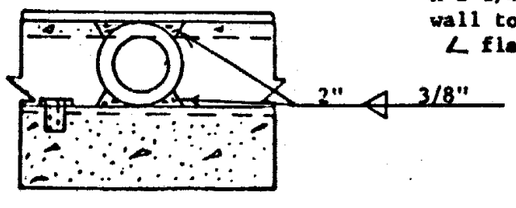

SECTION C-C

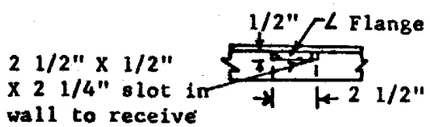

2 1/2" X 1/2" X 2 1/4" slot in wall to receive ∠ flange

SECTION F-F

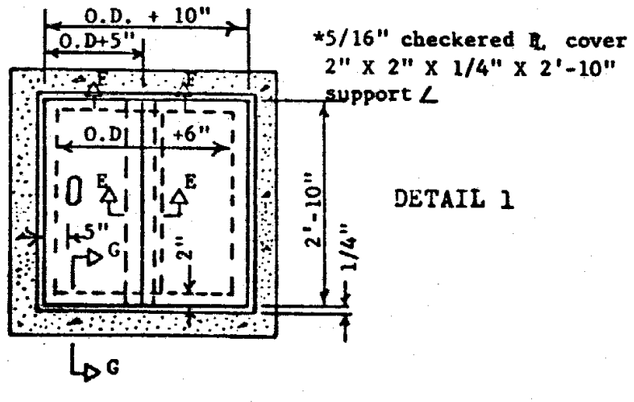

*5/16" checkered PL cover 2" X 2" X 1/4" X 2'-10" support ∠

DETAIL 1

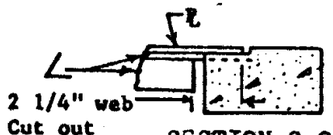

SECTION G-G

CULVERT INLET OPENING DETAILS
STD. RT. ANGLE CULVERTS ONLY

GENERAL NOTES

All concrete shall be Class A

Steel pipe, plate, strip and angle iron shall be in accordance with ASTM A 36

Exposed steel shall be given one coat of No. 1 and 10 paint

*When O.D. + 5" exceeds 1'-11", use 3/8" plate.

◐Additional reinf. required.

ARIZONA HIGHWAY DEPARTMENT
PLANS DIVISION

MEDIAN DYKE CATCH BASIN

Drawn	D.G. 3 - 68	Drawing No.
Traced	R.A.F. 4 - 68	C-15.10
Checked	J.P.O.	
Approved	[signature]	

Rev
12-5-68
4-28-70
10-6-70

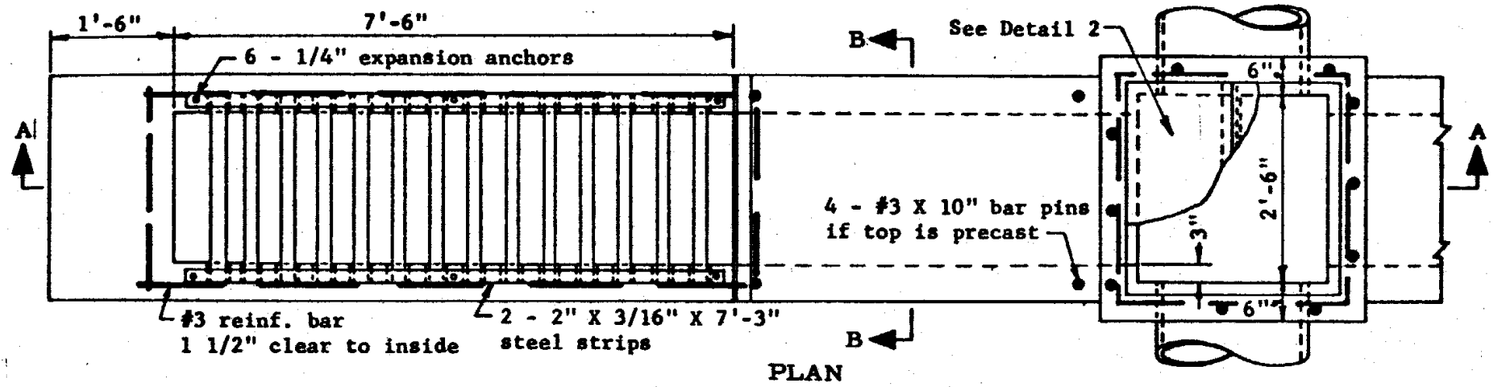

PLAN

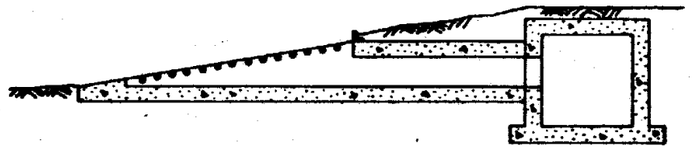

INLET TO BOX CULVERT
(See Bridge sheets for details)

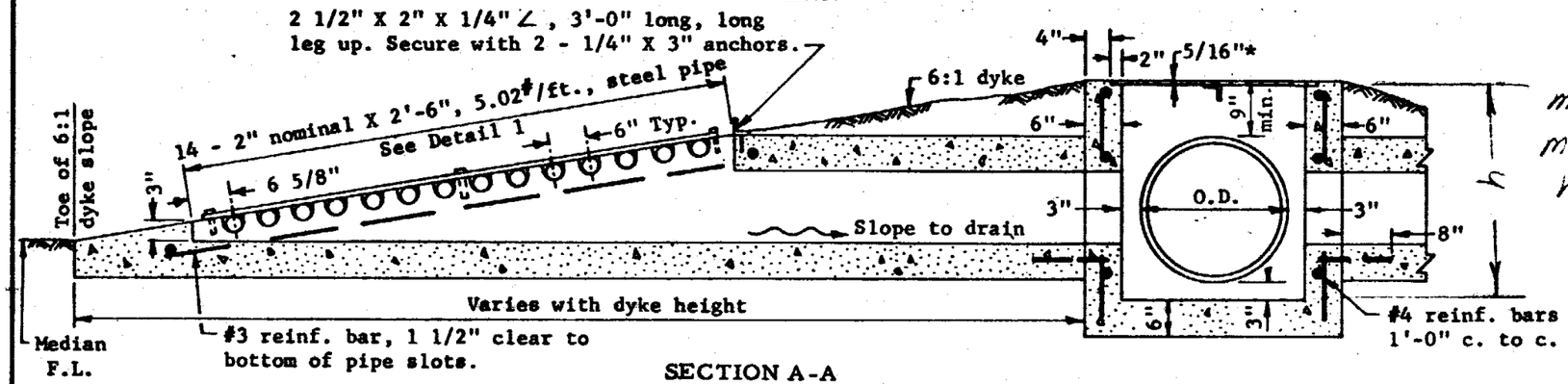

min - 24" — 4'
max - all — 9'
h - to be shown on plans

SECTION A-A

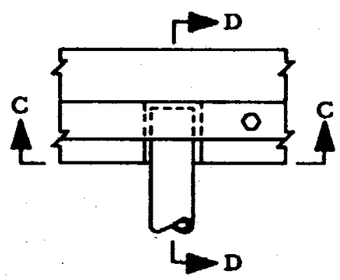

DETAIL 1

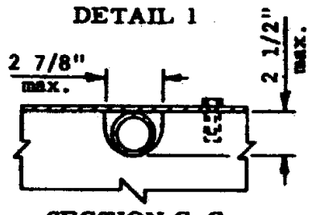

SECTION C-C

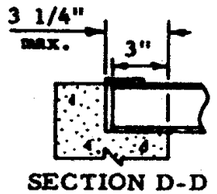

SECTION D-D

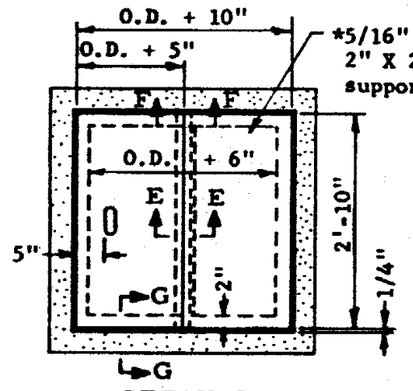

DETAIL 2

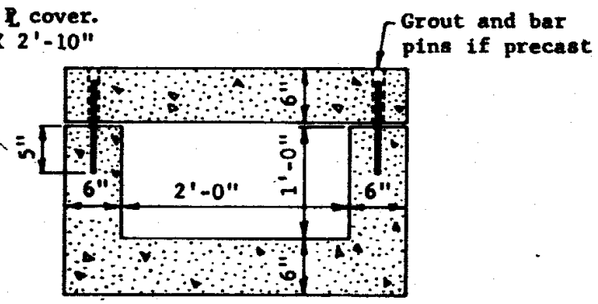

SECTION B-B

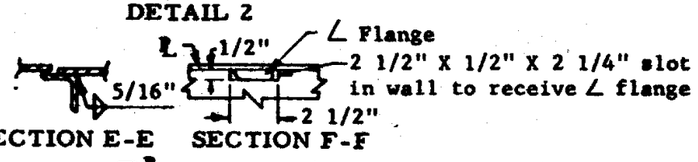

SECTION E-E SECTION F-F

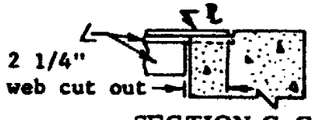

SECTION G-G

GENERAL NOTES

All concrete shall be Class A.

Steel pipe, plate and strip shall be in accordance with ASTM A 36.

Exposed steel shall be given one shop coat of No. 1 paint.

*When O.D. + 5" exceeds 1'-11", use 3/8" plate.

ARIZONA HIGHWAY DEPARTMENT
PLANS DIVISION

Rev 12-5-68

MEDIAN DYKE CATCH BASIN

Drawn	D.G. 3-68	Drawing No.
Traced	R.A.F. 4-68	C-15.10
Checked	J.P.O. 5-68	
Approved Engr. Plans	5-68	

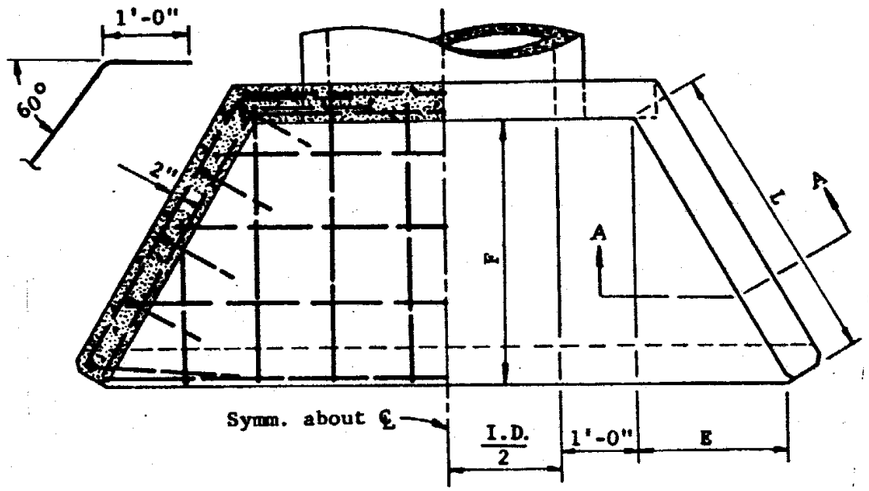

PLAN

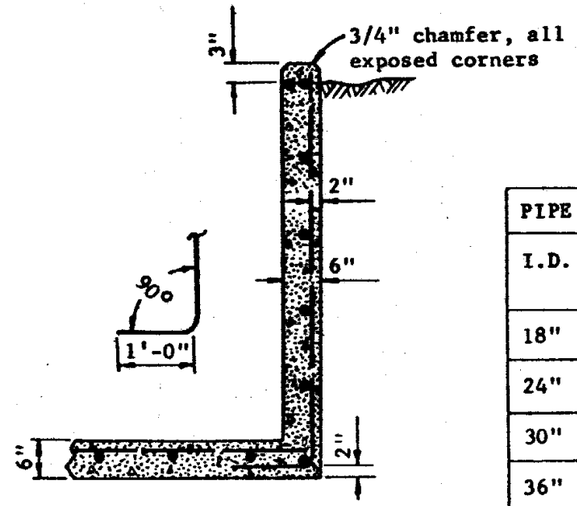

SECTION A-A

PIPE	DIMENSIONS			QUANTITIES		
I.D.	L	E	F (Approx)	C.Y. Conc. C.M.P.	C.Y. Conc. R.C.P.	Reinf.Steel Lbs.
18"	2'-0"	1'-0"	1'-9"	0.97	0.96	65
24"	2'-0"	1'-0"	1'-9"	1.11	1.07	78
30"	3'-0"	1'-6"	2'-7"	1.50	1.44	108
36"	4'-0"	2'-0"	3'-6"	2.08	2.01	150
42"	5'-0"	2'-6"	4'-4"	2.71	2.63	205
48"	6'-0"	3'-0"	5'-2"	3.39	3.30	270
54"	7'-0"	3'-6"	6'-1"	4.14	4.02	335
60"	8'-0"	4'-0"	6'-11"	4.96	4.80	410

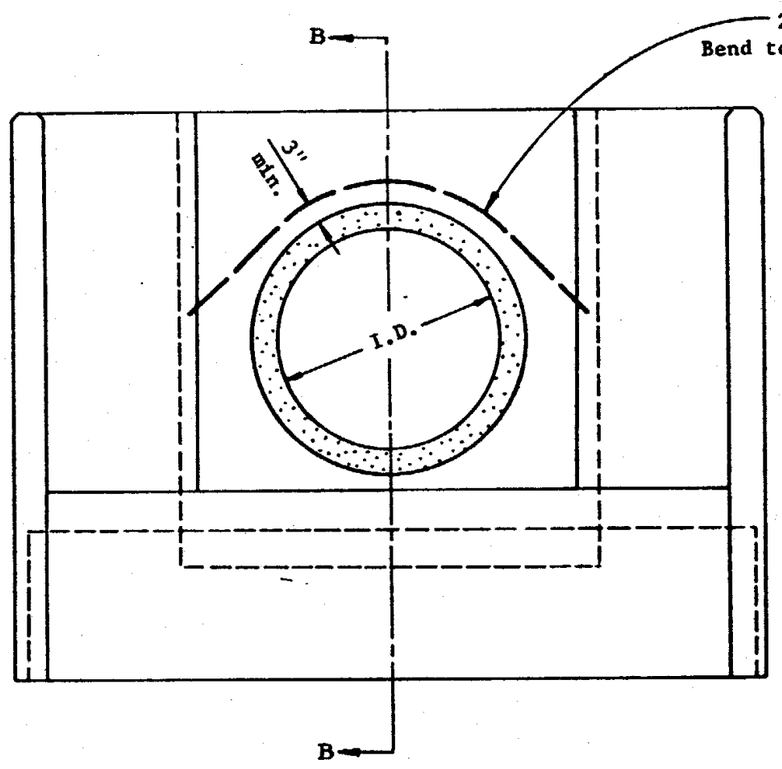

ELEVATION

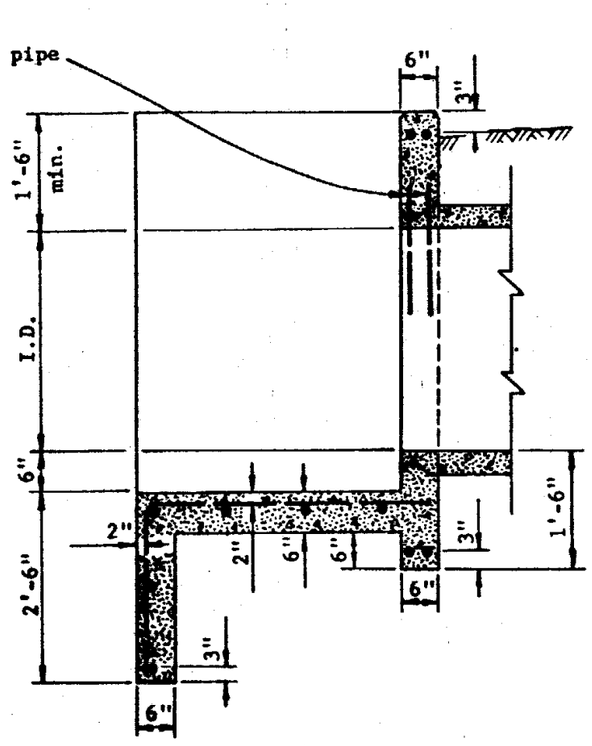

SECTION B-B

GENERAL NOTES

All concrete shall be Class A.

All reinforcing bars shall be #4 except two #6 bars over pipe. Bar spacing approximately 1'-0" c to ℄ unless otherwise noted.

ARIZONA HIGHWAY DEPARTMENT
PLANS DIVISION

IRRIGATION HEADWALLS 18" TO 60" DIAMETER PIPES

Drawn	R.J.J.	3-10-58	Drawing No.
Traced	S.L.T.	5-4-67	
Checked	J.P.O.	JPO 5-68	C-16.01
Approved Engr. Plans	G Weidecker 5-68		

Rev

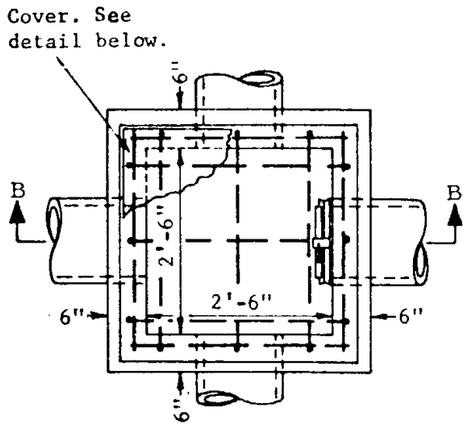

PLAN

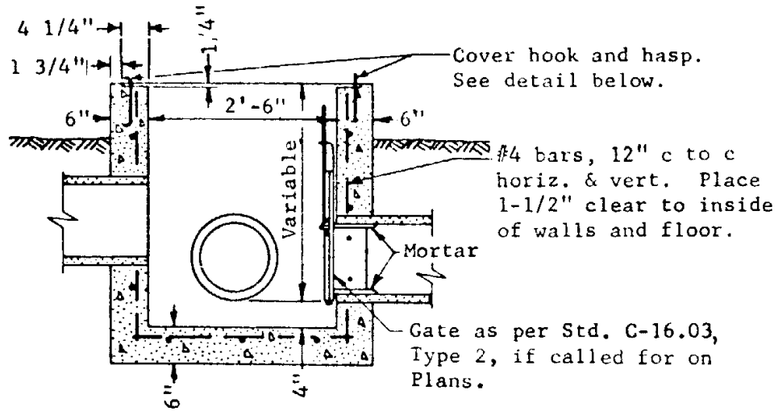

SECTION B-B

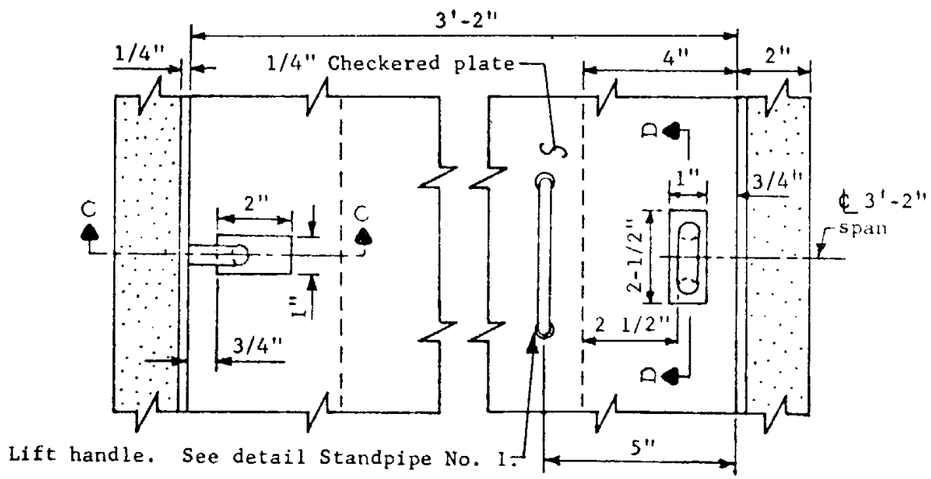

PLAN-LOCKING COVER

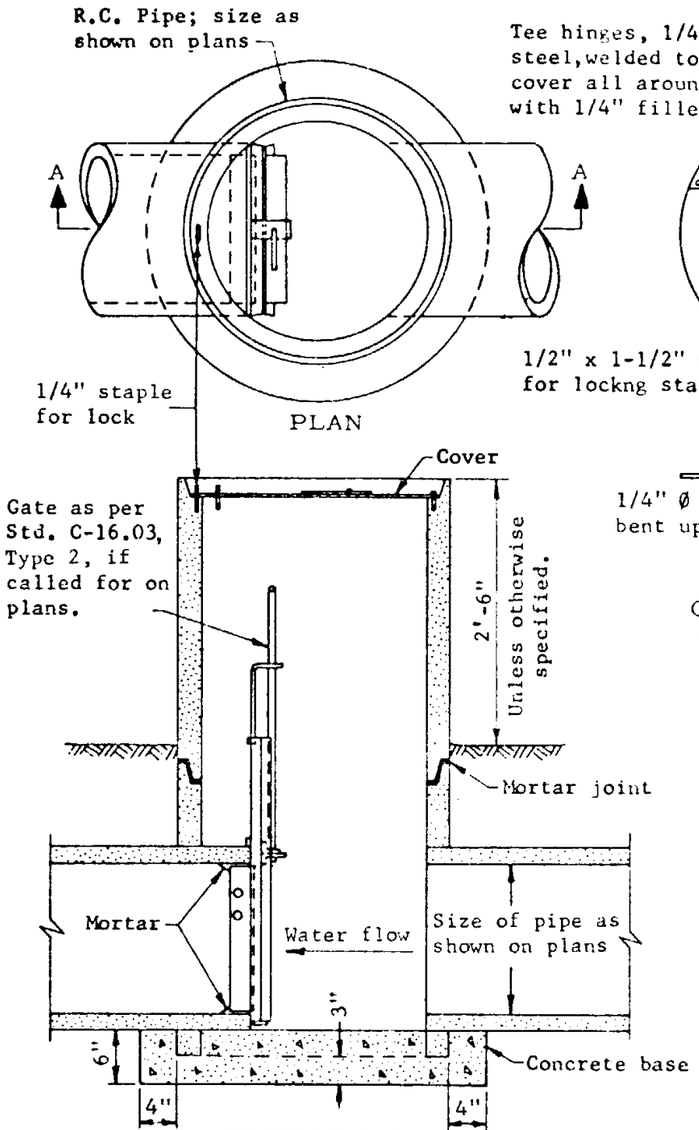

PLAN

SECTION A-A

IRRIGATION STANDPIPE NO. 1

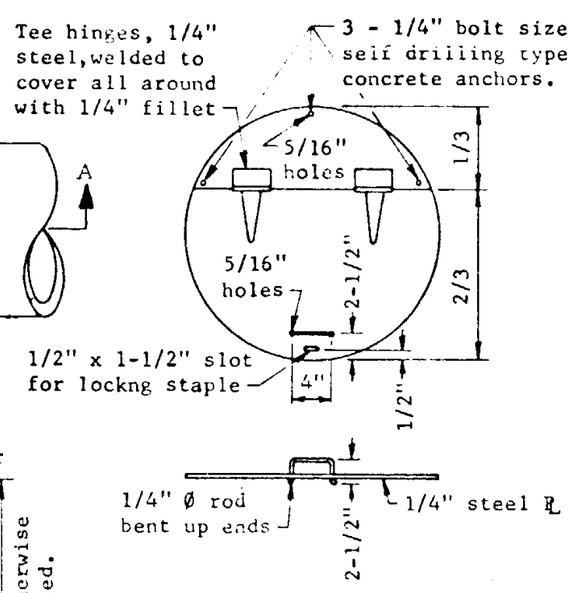

COVER FOR NO. 1 STANDPIPE

GENERAL NOTES

All concrete shall be Class A.

Structural steel shall be in accordance with ASTM A 36.

All cover steel and exposed appurtenances shall be given one shop coat of No. 1 paint.

Plans shall specify locked or bolted cover for Standpipe No. 2

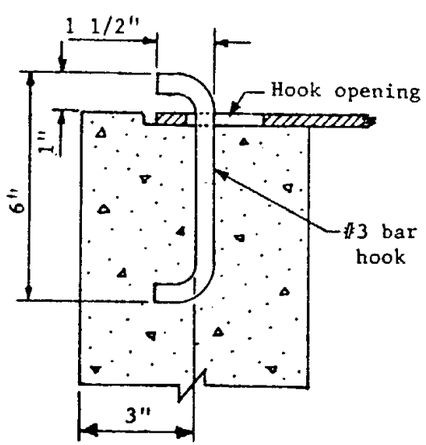

SECTION C-C

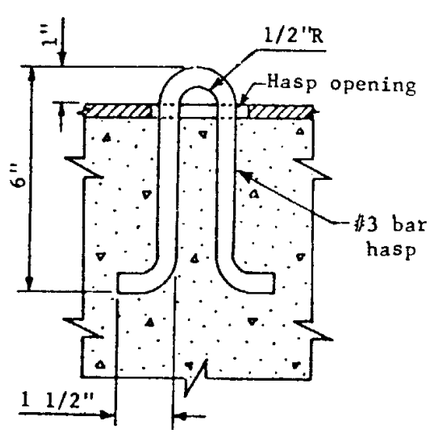

SECTION D-D

IRRIGATION STANDPIPE NO. 2

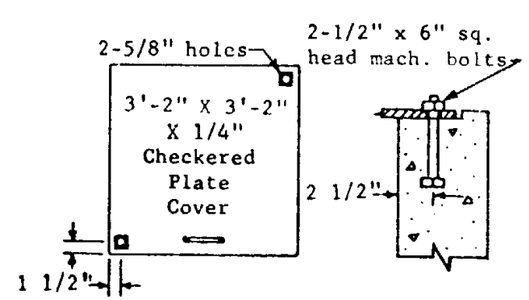

BOLTED COVER FOR STANDPIPE NO. 2

ARIZONA HIGHWAY DEPARTMENT
PLANS DIVISION

IRRIGATION STANDPIPE NO. 1 AND NO. 2

Drawn	S.G.	Drawing No.
Traced	R.A.F. 10-67	C-16.02
Checked	J.P.O. 5-68	
Approved Dir. Plans	5-68	

Rev

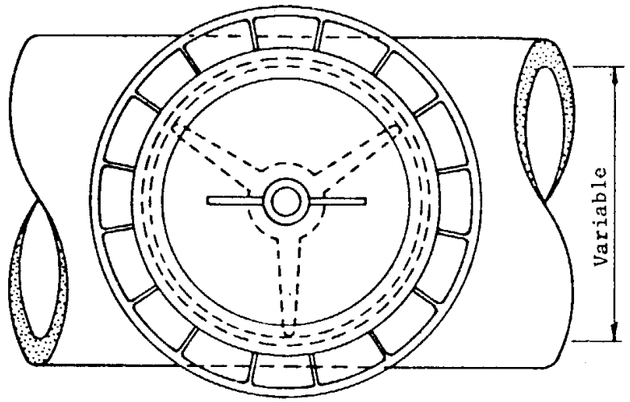

PLAN

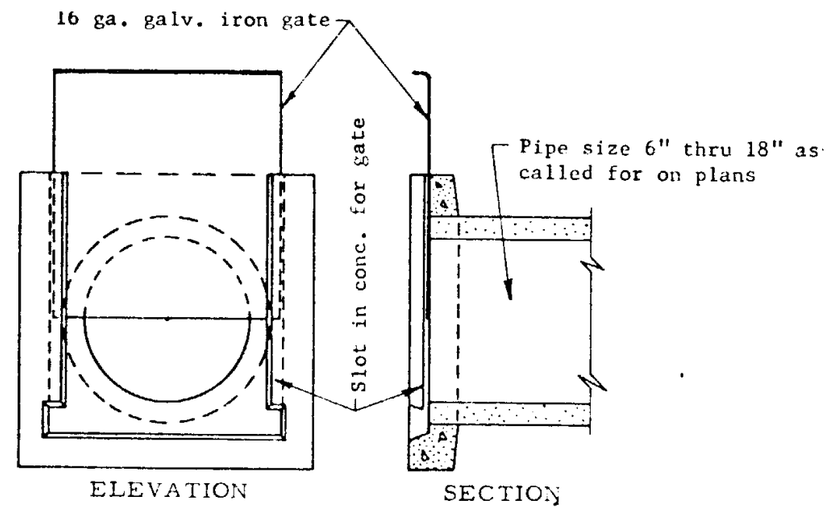

ELEVATION SECTION

PRECAST IRRIGATION GATE
For open ditch installation
TYPE 1

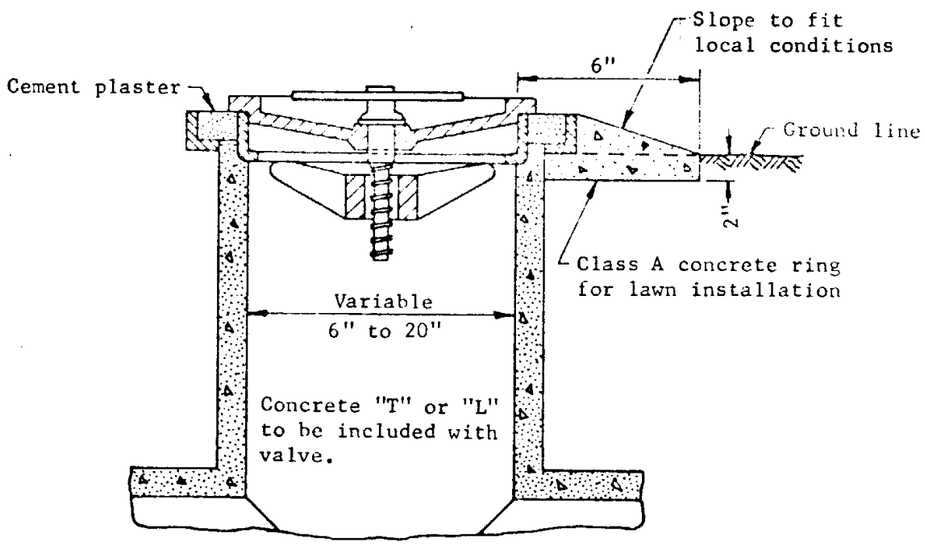

Irrigation Valve Number of valve shall correspond to the size of the pipe in inches. No. 6 to No. 20.

PART SECTION
FLUSH IRRIGATION VALVE

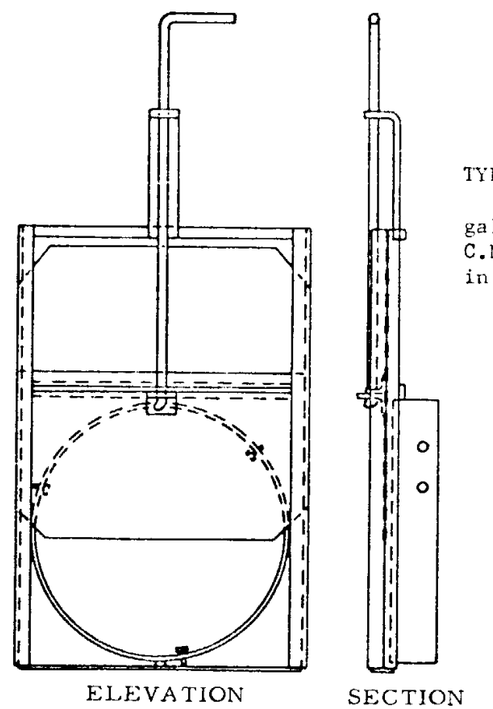

ELEVATION SECTION

IRRIGATION GATE
For standpipe installation
TYPE 2

TYPE 2

For pipes 6" through 24". Gate and frame shall be galvanized iron. Type shown is for concrete pipe. For C.M.P., external steel adjustable band shall be used in place of internal steel ring.

ARIZONA HIGHWAY DEPARTMENT PLANS DIVISION		Rev
IRRIGATION VALVE IRRIGATION GATES		
Drawn	O.K. 12/35	Drawing No.
Traced	R.A.F. 10/66	
Checked	J.P.O. JPO 5-68	C-16.03
Approved Engr. Plans	[illegible] 5-68	

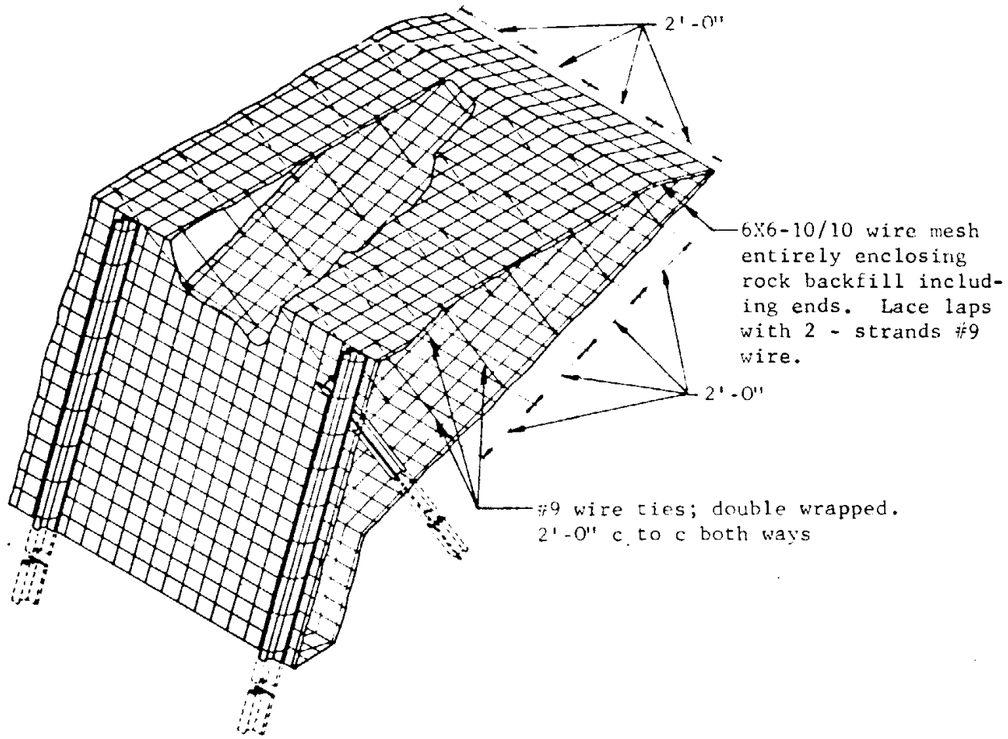

PERSPECTIVE
Drawn for Types 1 & 2. Type 3 similar.

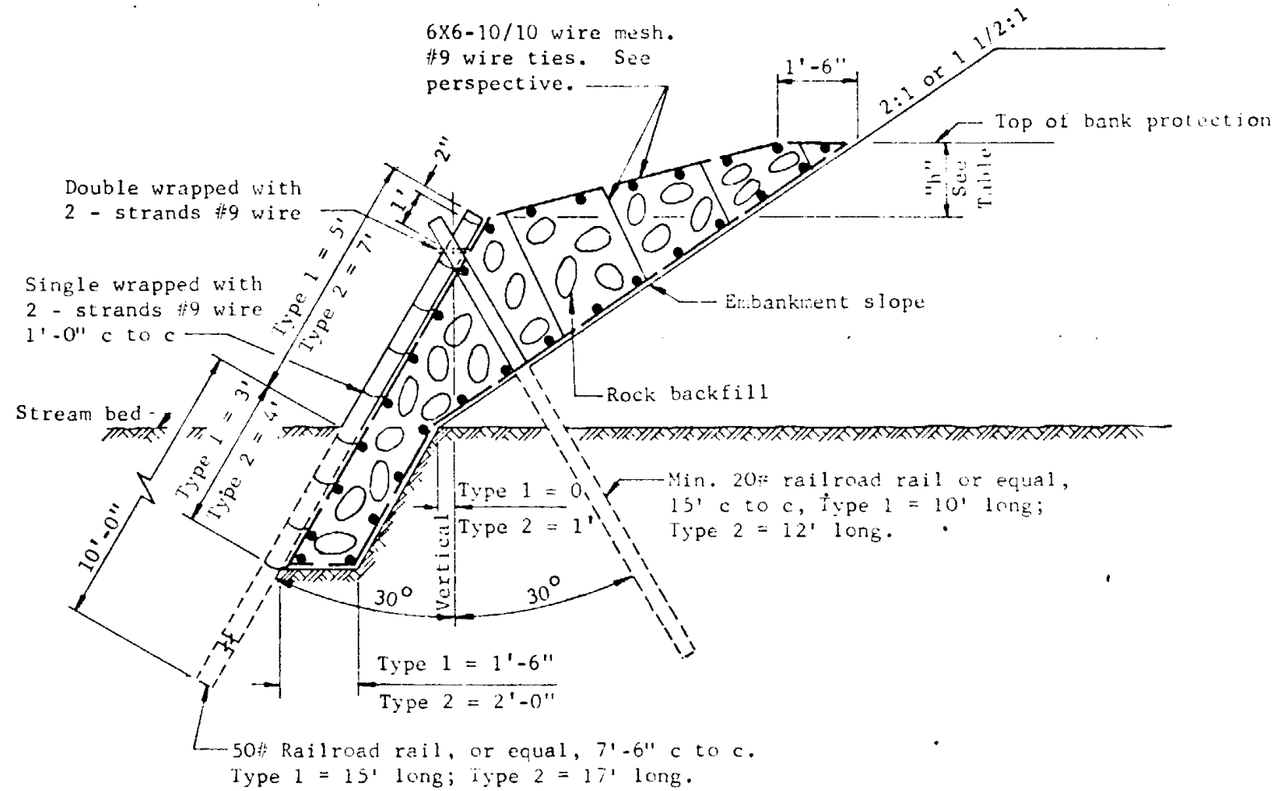

TYPE : TYPE 1 & 2 BANK PROTECTION

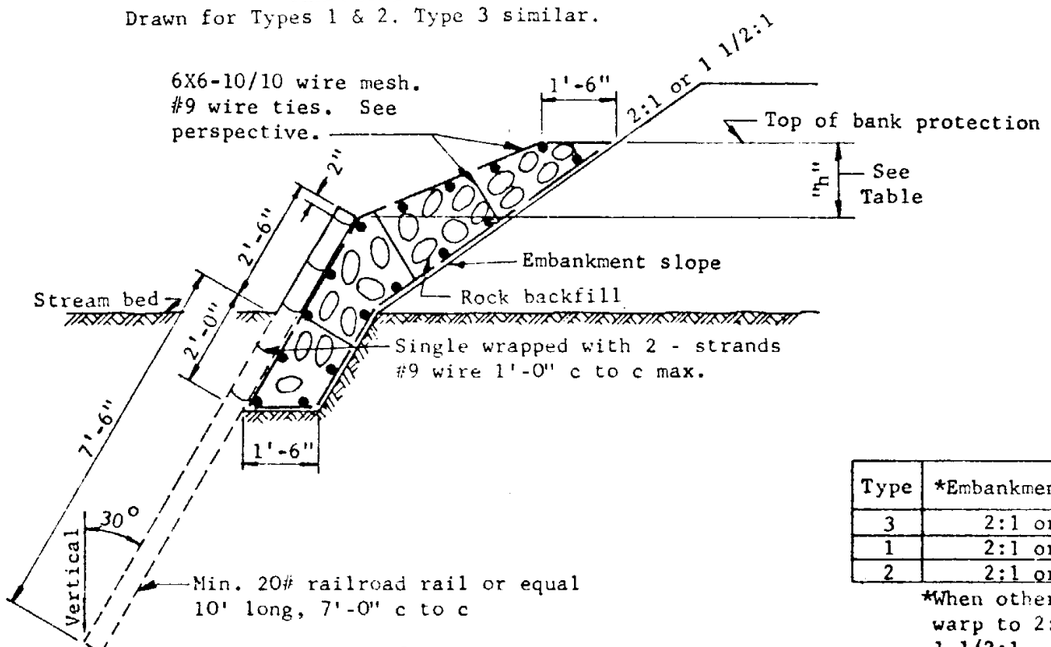

TYPE 3 BANK PROTECTION

Type	*Embankment slope rate	"h"	Top of bank protection above stream bed
3	2:1 or 1 1/2:1	0' to 2'	2' to 4'
1	2:1 or 1 1/2:1	0' to 3'	4' to 7'
2	2:1 or 1 1/2:1	0' to 6'	6' to 12'

*When other embankment slope rates are encountered, warp to 2:1 or 1 1/2:1; that is, warp 1:1 slope to 1 1/2:1.

GENERAL NOTES
Rock for backfill shall not pass a 6" square opening.

ARIZONA HIGHWAY DEPARTMENT
PLANS DIVISION

BANK PROTECTION TYPES 1, 2, & 3

Drawn	H.A.K. 6-33	Drawing No.
Traced	SLT & RAF 7-67	C-17.01
Checked	J.P.O. 5-68	
Approved Engr. Plans	5-68	

Rev

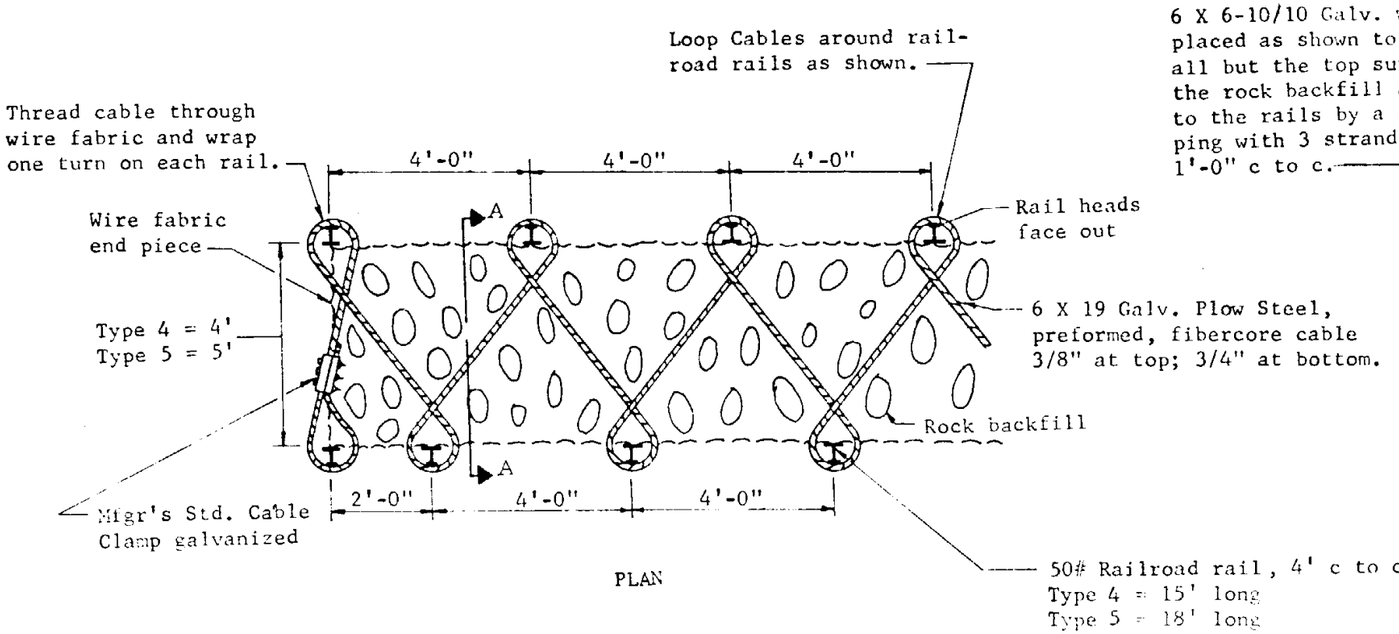

PLAN

TYPES 4 & 5 BANK PROTECTION

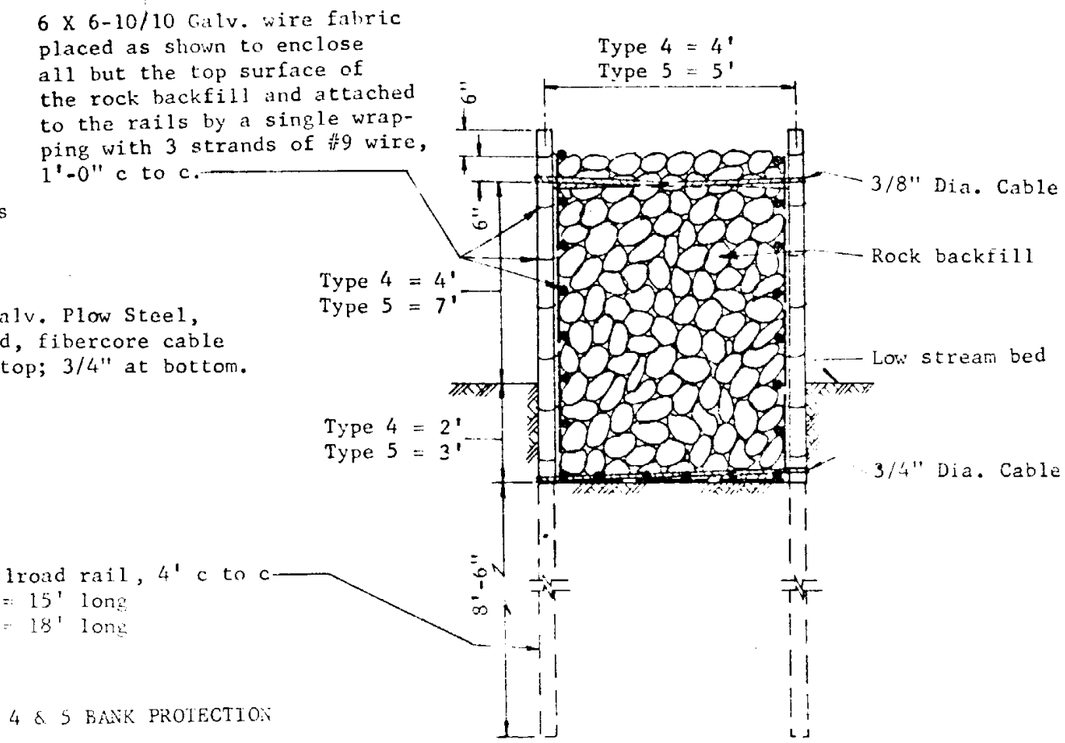

SECTION A-A

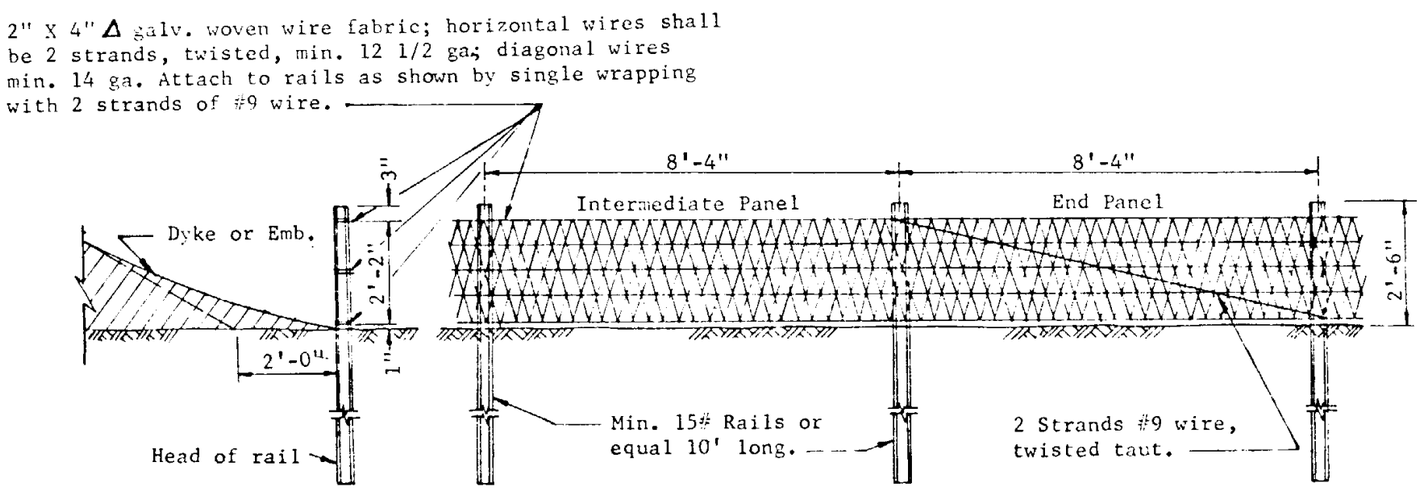

TYPE 6 BANK PROTECTION

GENERAL NOTES

Rock for backfill shall not pass a 6" square opening.

ARIZONA HIGHWAY DEPARTMENT PLANS DIVISION			Rev
BANK PROTECTION RAIL AND WIRE TYPES 4, 5, & 6			
Drawn	H.A.K. 6-35	Drawing No.	
Traced	S.L.T. 6-67		
Checked	J.P.O. JPO 5-68	C-17.02	
Approved Engr. Plans	E. Heidecker 5-68		

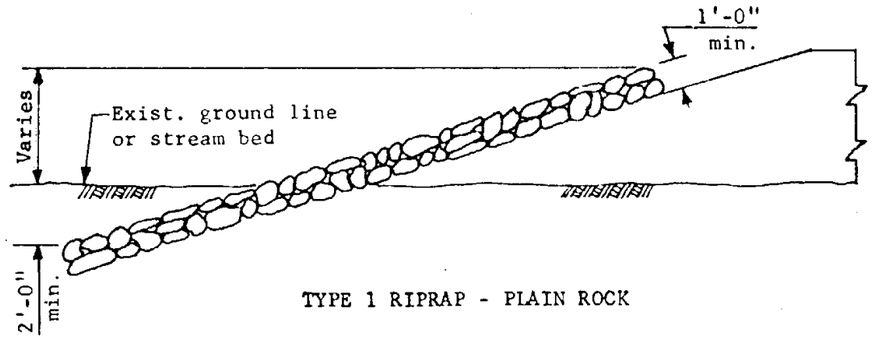

TYPE 1 RIPRAP - PLAIN ROCK

TYPE 2 RIPRAP - GROUTED ROCK

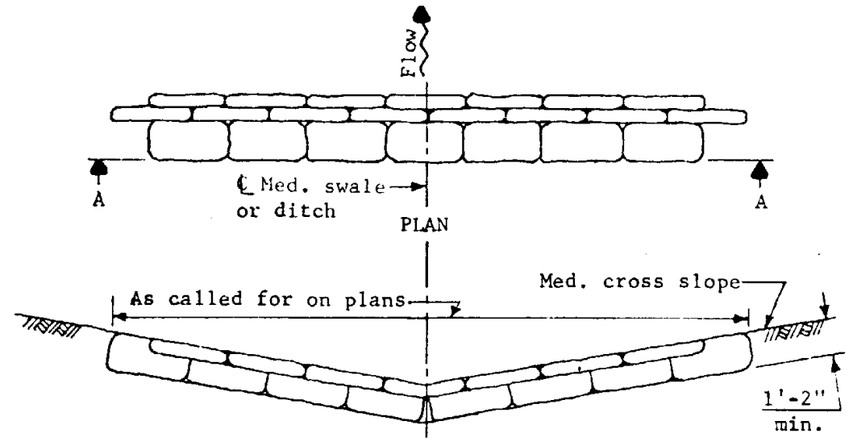

ELEVATION A-A

TYPE 4 RIPRAP - SACKED CONCRETE EROSION CHECK

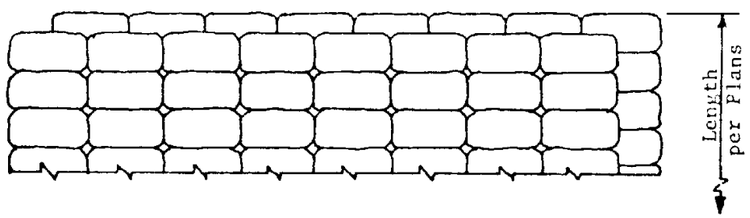

PLAN

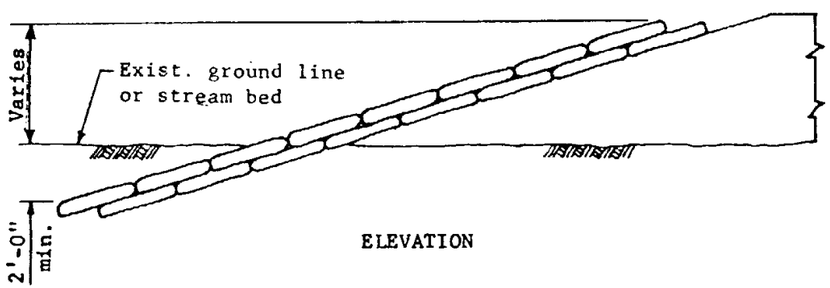

ELEVATION

TYPE 3 RIPRAP - SACKED CONCRETE

GENERAL NOTES
Grout for riprap may be pneumatically placed mortar.

ARIZONA HIGHWAY DEPARTMENT PLANS DIVISION			Rev
RIPRAP			
Drawn	D.G. 5-68	Drawing No.	
Traced	D.G. 5-68	C-17.03	
Checked	J.P.O. JPO 5-68		
Approved Engr. Plans	[illegible] 5-68		

HALF PLAN

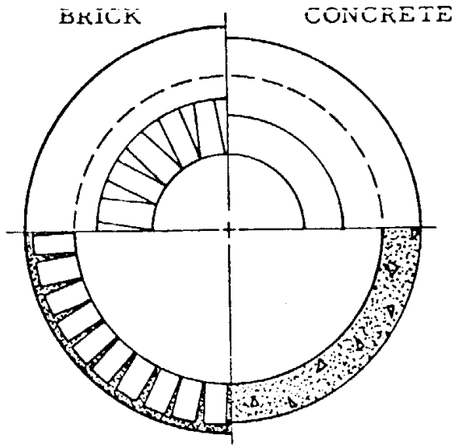

SECTION A-A

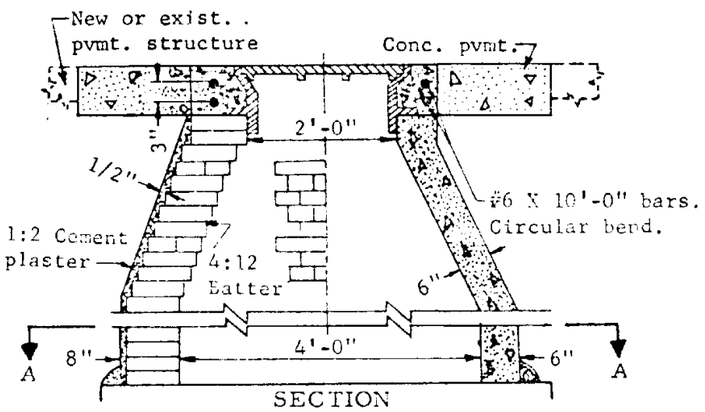

SECTION

BRICK MANHOLE NO. 1 CONCRETE MANHOLE NO. 2

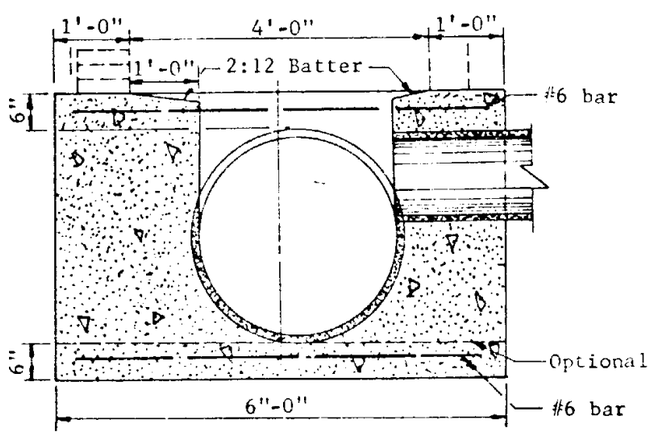

SECTION
STANDARD BASE STRUCTURE
FOR PIPES 6" TO 36" I. D.

HALF PLAN
PIPES 36" I. D. & SMALLER

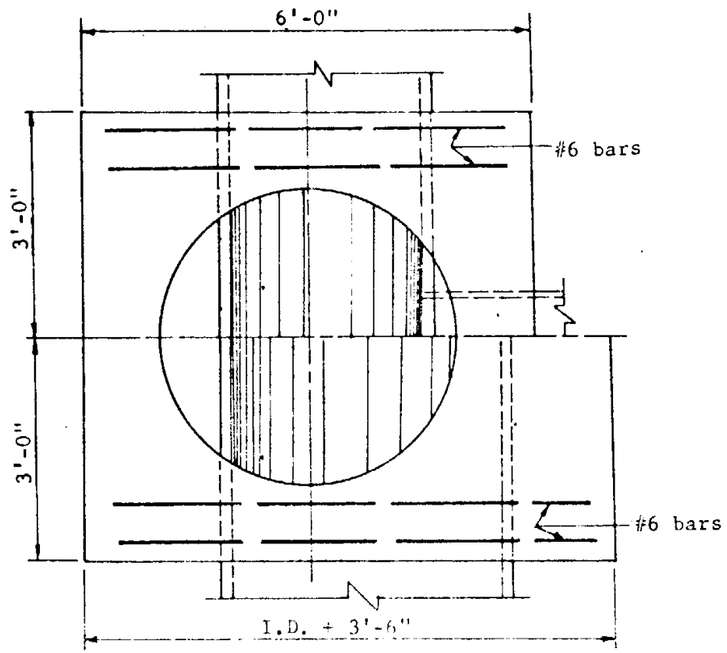

HALF PLAN
PIPES OVER 36" I. D.

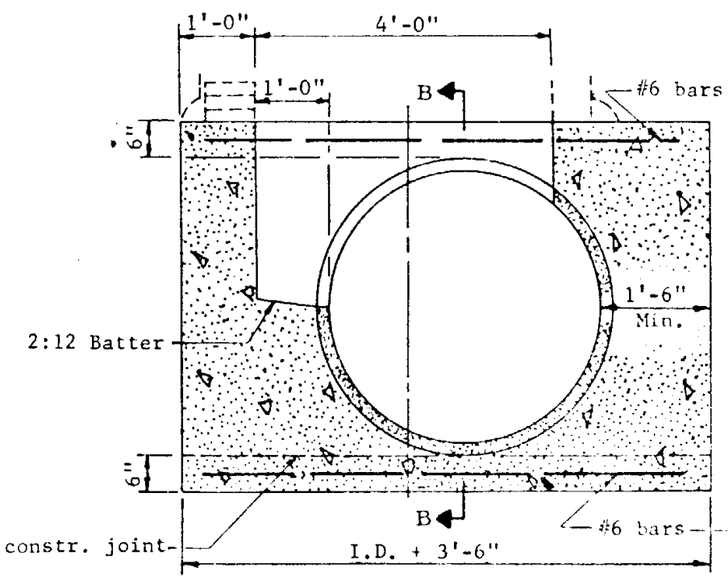

SECTION
STANDARD BASE STRUCTURE
FOR PIPES OVER 36" I. D.

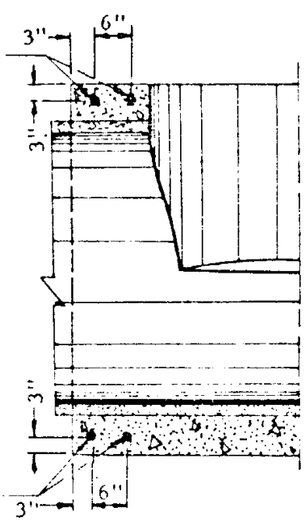

PART SECTION B-B

GENERAL NOTES

All concrete shall be Class A.

Every fifth course of bricks shall be laid as stretchers.

Manhole frame and cover, Std. C-18.02, is shown. Other types may be substituted if noted on Plans.

For manhole cut replacement in bituminous or concrete pavement, see Std. C-7.03.

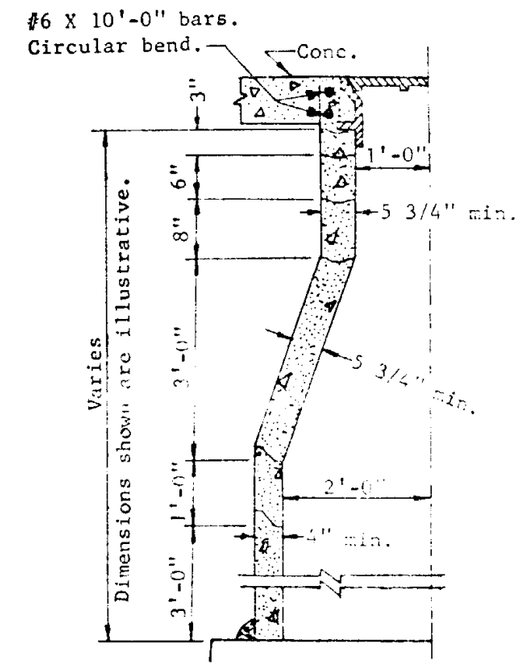

HALF SECTION
MANHOLE NO. 3
PRECAST REINFORCED CONCRETE

ARIZONA HIGHWAY DEPARTMENT
PLANS DIVISION

Rev

MANHOLE DETAILS

Drawn	R.E.W. - 3-58	Drawing No.
Traced	S.L.T. - 5-57	
Checked	J.P.O. JPO 5-68	C-18.01
Approved Engr. Plans	[illegible] 8-68	

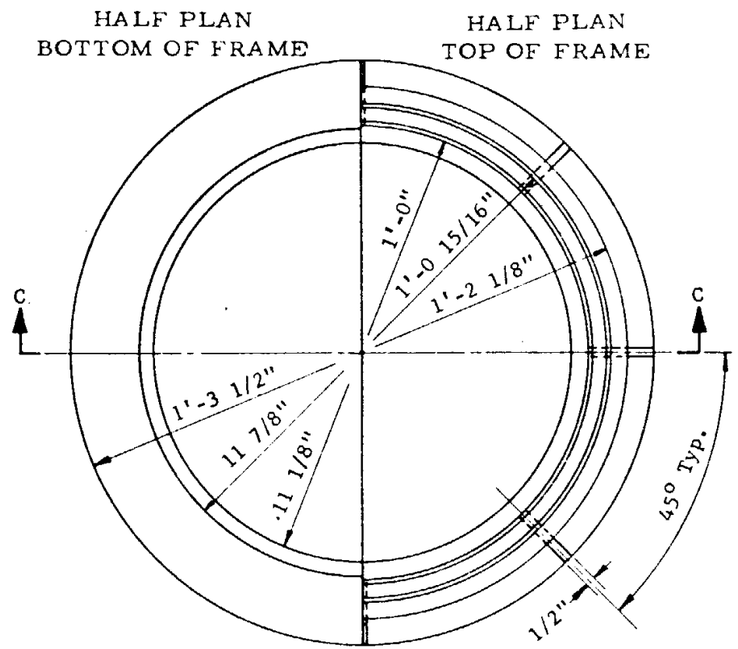

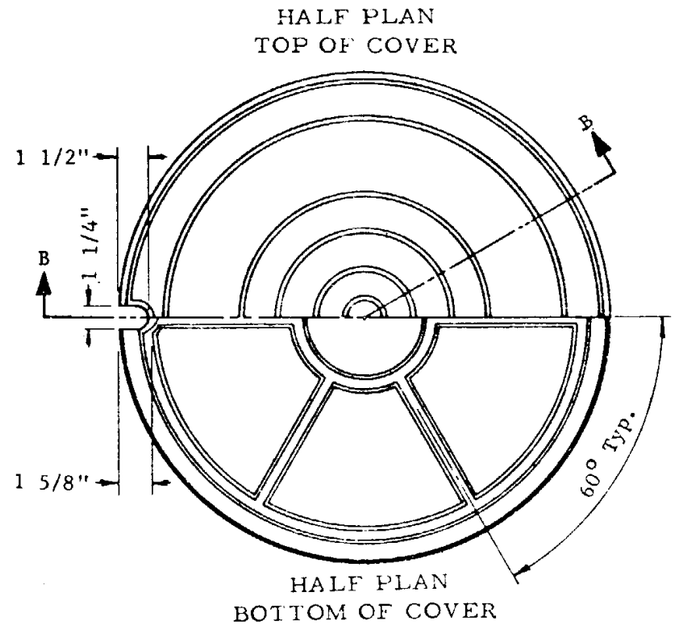

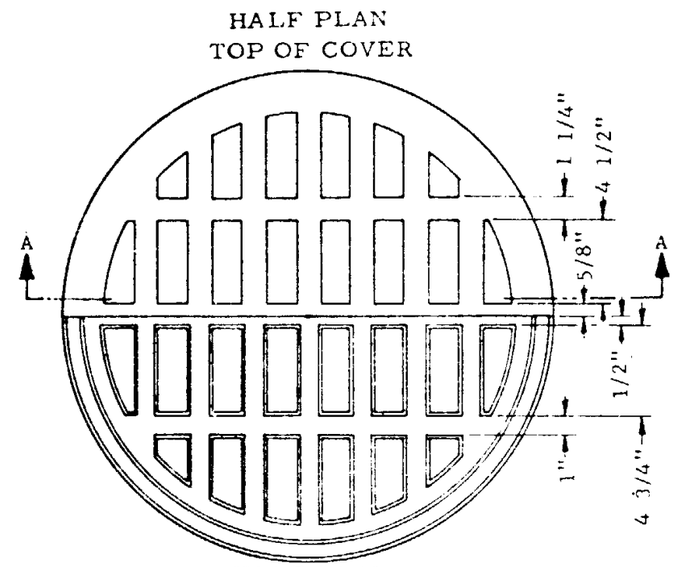

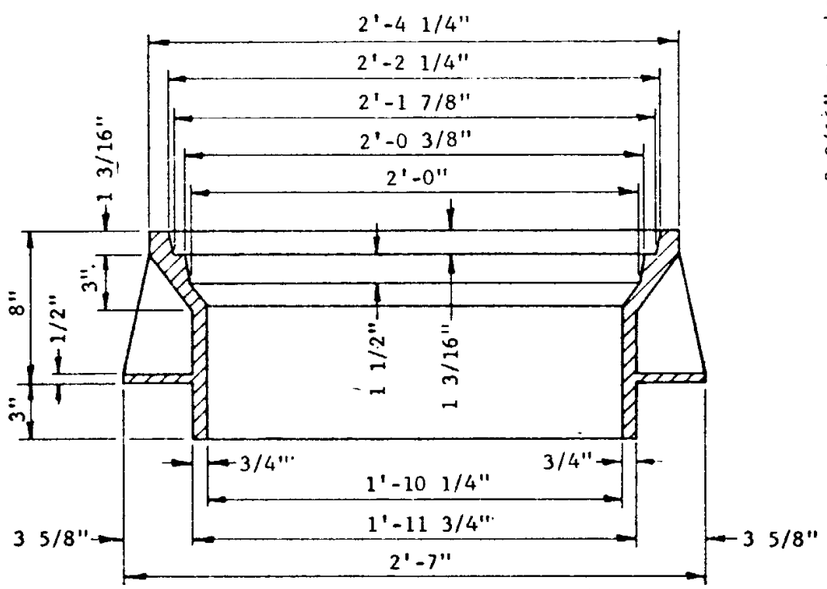

SECTION C-C OF FRAME
Approx. weight 260 lbs.

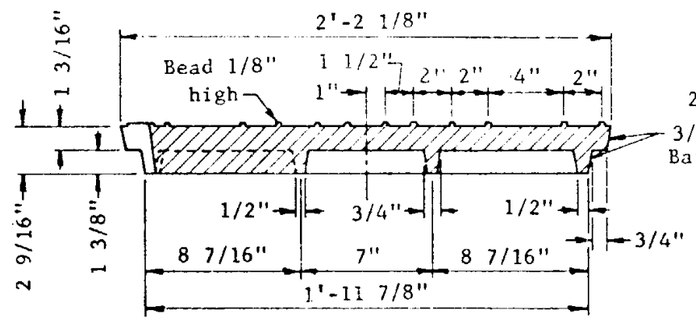

SECTION B-B OF COVER

TYPE A COVER
Approx. weight 190 lbs.

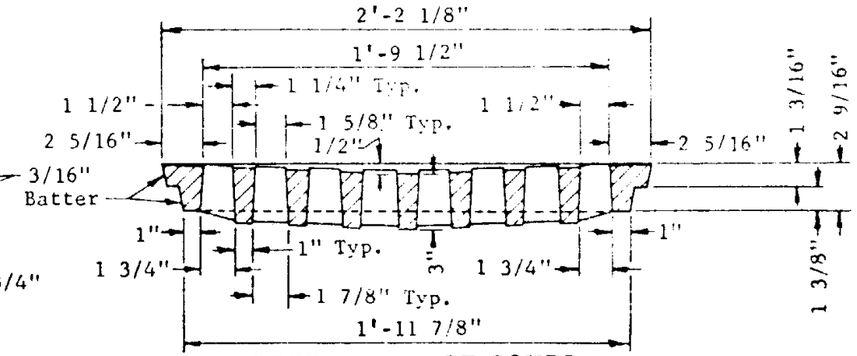

SECTION A-A OF COVER

TYPE B COVER
Approx. weight 280 lbs.

GENERAL NOTES

Type C cover shall be the same as Type A except that the cover shall be vented with at least six one inch holes, equally spaced in a circle 8 1/2" from the center of the cover.

Type A cover shall be used unless otherwise specified.

The bearing faces shall be machined so that the cover will have a uniform bearing in any position in the frame.

ARIZONA HIGHWAY DEPARTMENT
PLANS DIVISION

Rev

MANHOLE-CAST IRON FRAME & COVER DETAILS

Drawn	O.K. 10-35	Drawing No.
Traced	R.A.F. 6-67	C-18.02
Checked	J.P.O. 5-68	
Approved Engr. Plans	5-68	

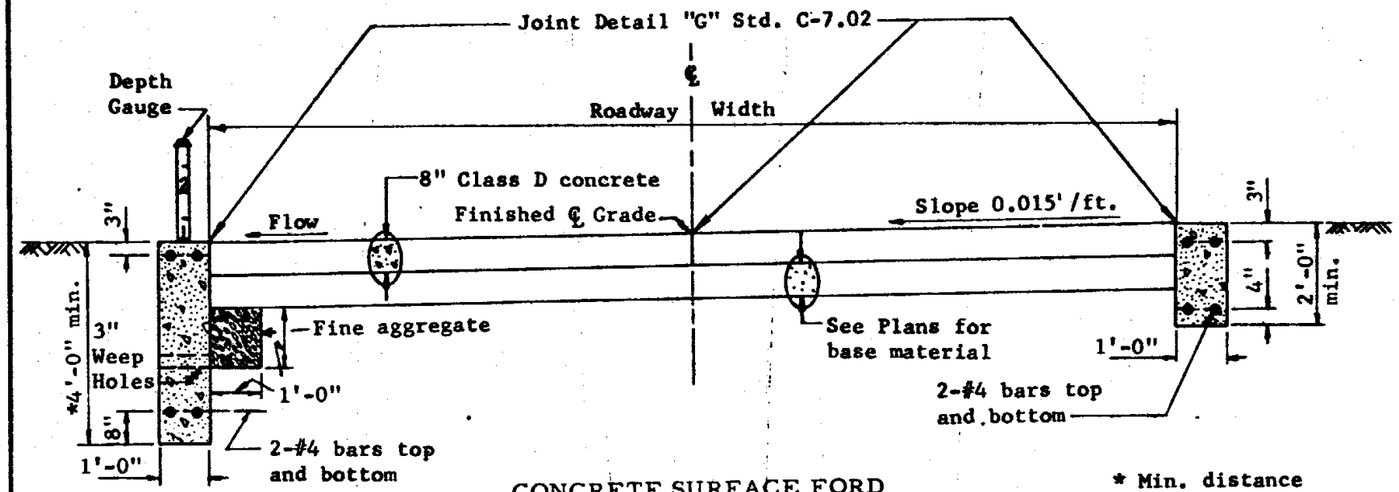

CONCRETE SURFACE FORD
CONCRETE WALLS

* Min. distance below stream bed

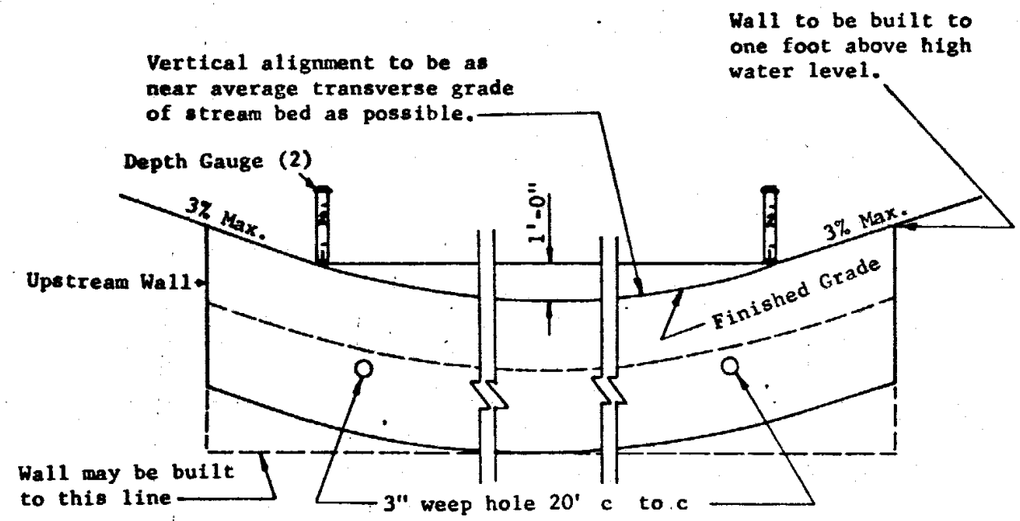

ELEVATION LOOKING UPSTREAM

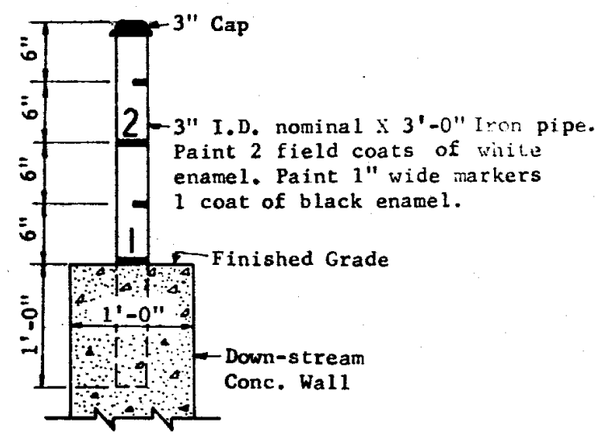

DEPTH GAUGE

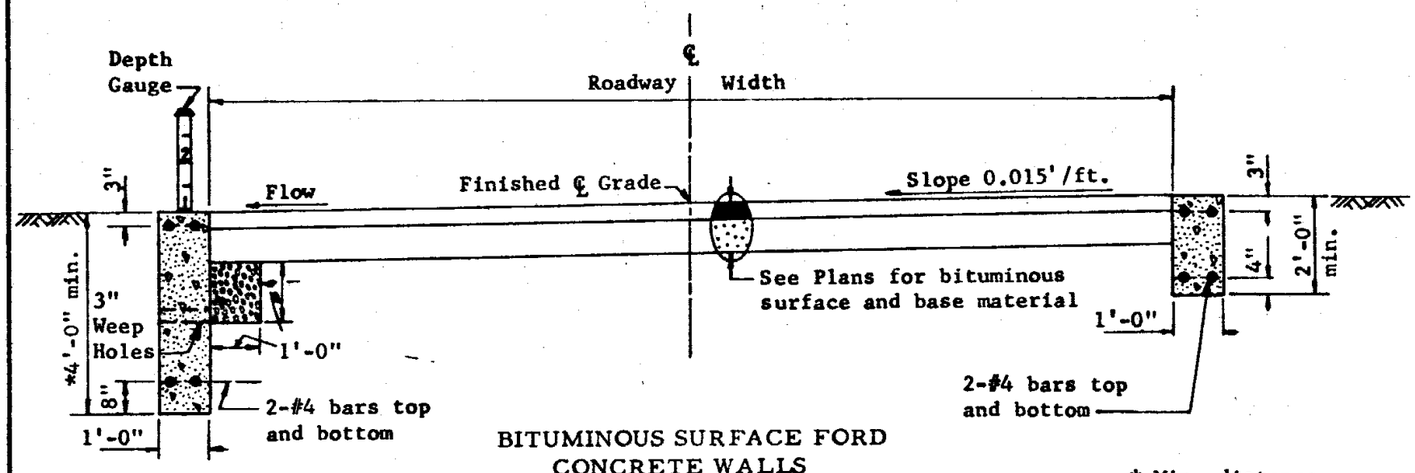

BITUMINOUS SURFACE FORD
CONCRETE WALLS

* Min. distance below stream bed

GENERAL NOTES

Ford walls to be Class "A" Concrete.

ARIZONA HIGHWAY DEPARTMENT
PLANS DIVISION

Rev 12-5-68

FORD CONCRETE WALLS

Drawn	C.B.B. - 7-45	Drawing No.
Traced	S.L.T. - 5-67	C-19.01
Checked	J.P.O. 5-68	
Approved Engr. Plans	5-68	

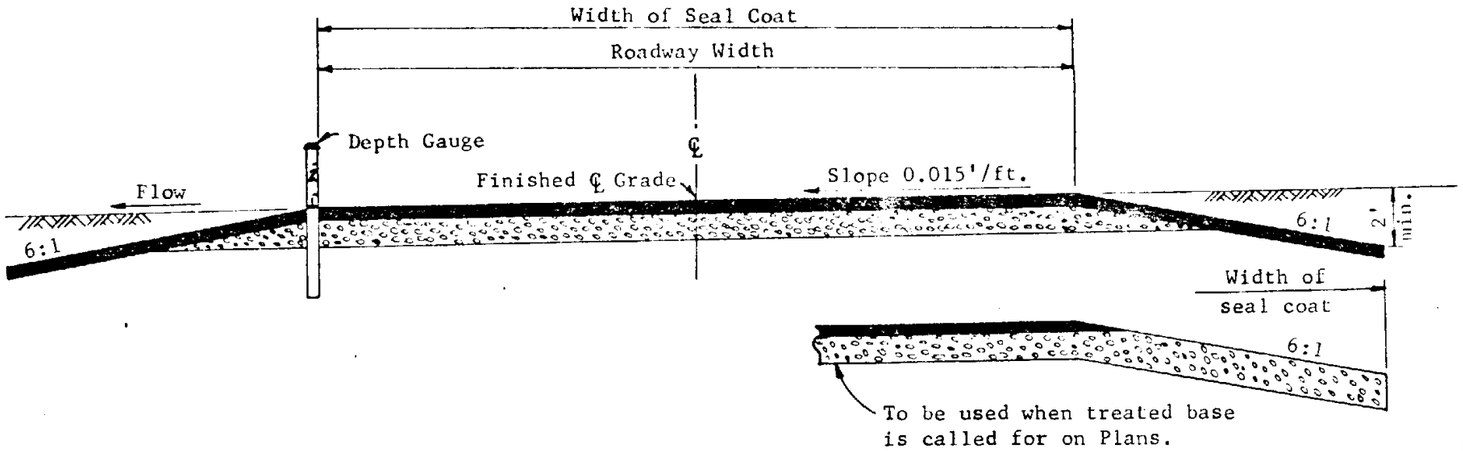

TYPE 1
BITUMINOUS SURFACE FORD

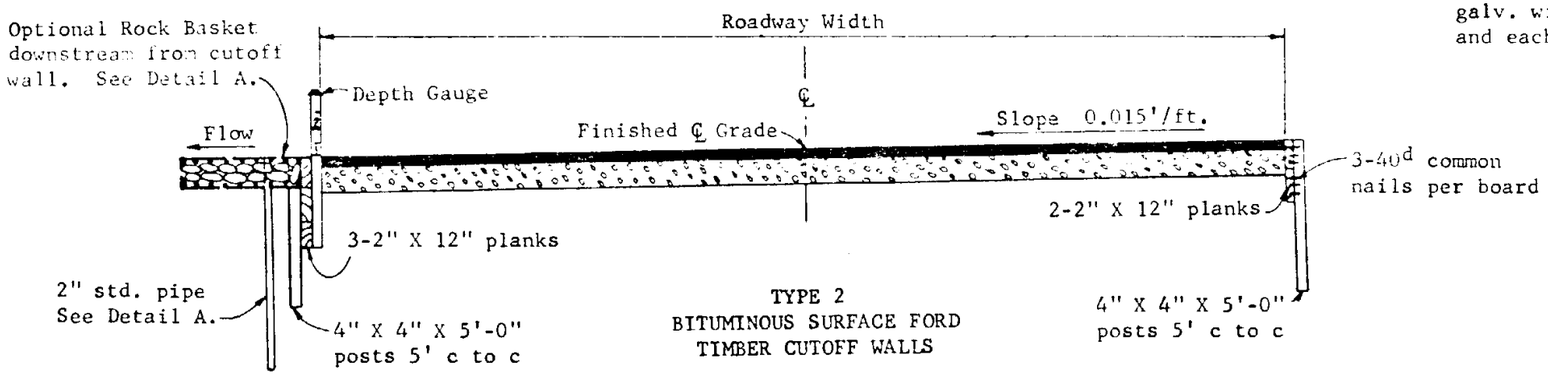

TYPE 2
BITUMINOUS SURFACE FORD
TIMBER CUTOFF WALLS

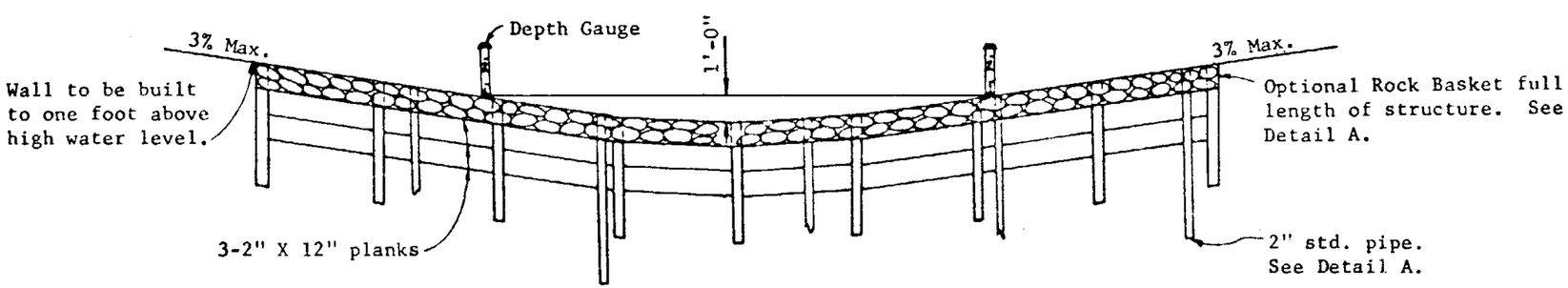

ELEVATION - TYPE 2

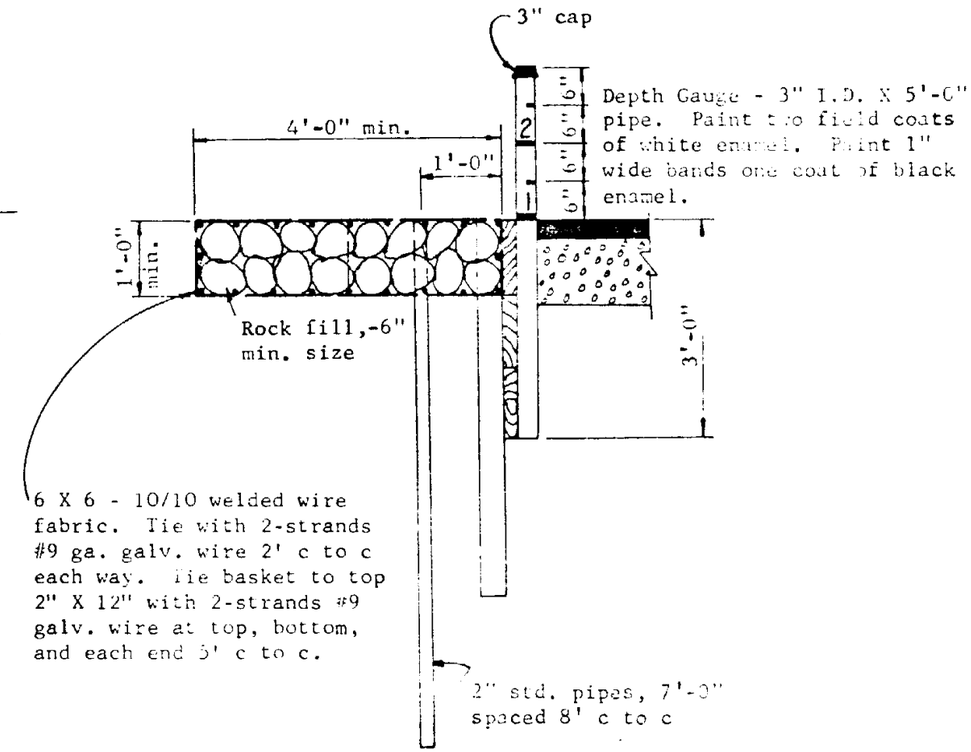

DETAIL A

GENERAL NOTES

All timber shall be rough, pressure treated and unpainted.

Rock basket, full length of structure shall be included only when called for on Plans.

See Plans for bituminous surface and base material details.

Galvanize pipes in accordance with ASTM A123.

ARIZONA HIGHWAY DEPARTMENT PLANS DIVISION			Rev 12-5-68
FORDS			
Drawn	C.B.B. 7-65	Drawing No.	
Traced	S.L.T. 5-67	C-19.02	
Checked	J.P.O. 5-68		
Approved Engr. Plans	5-68		

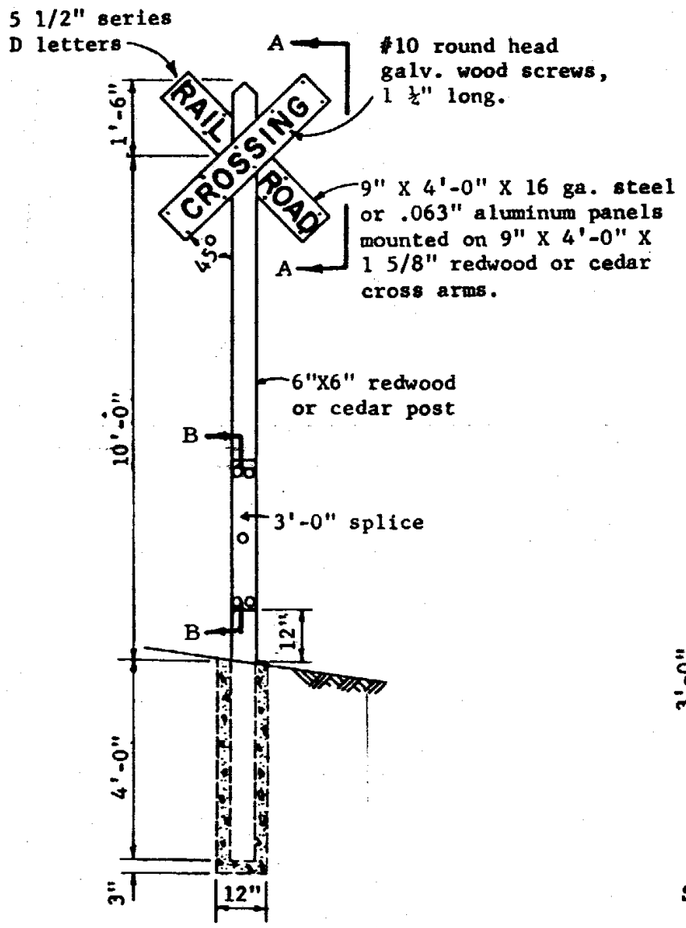

RAILROAD CROSSING SIGN

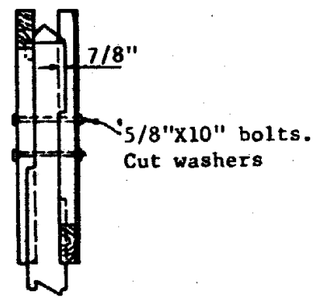

SECTION A-A

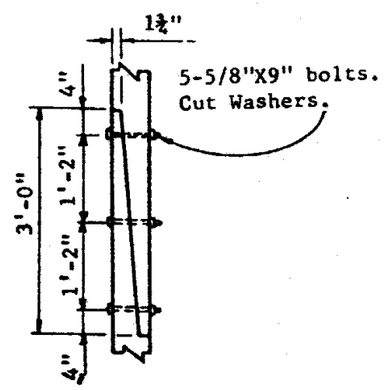

SECTION B-B

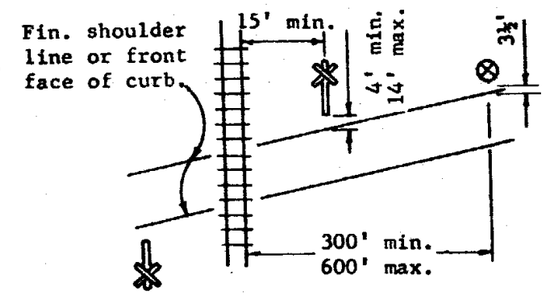

LOCATION PLAN

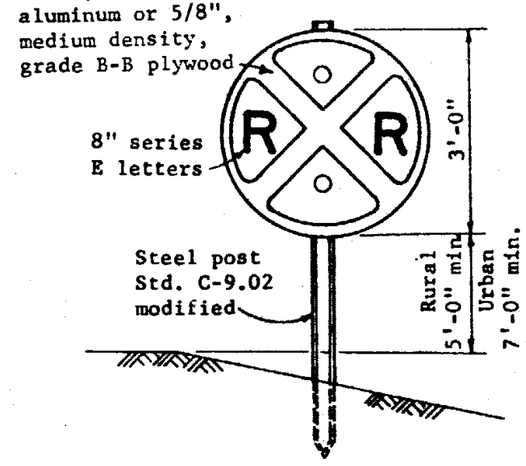

RAILROAD ADVANCE
WARNING SIGN

GENERAL NOTES

All wood shall be redwood or cedar, S4S and untreated.

When a single railroad crossing sign is used for a crossing, both sides of cross arms shall carry sheet steel or aluminum message panels. When two railroad crossing signs are used for a crossing, lettered message panels shall be mounted only on the side of cross arms facing traffic.

Railroad Crossing Sign message panel background shall be silver-white flat top reflective sheeting with black, opaque letters.

Advance Warning Sign traffic face background shall be highway yellow flat top reflective sheeting with black, opaque letters, border and symbol.

All wood and metal surfaces, except those covered with reflective sheeting shall be primed and finished with two coats of No. 11 white enamel.

Reflective sheeting shall be applied in accordance with the manufacturer's specifications.

ARIZONA HIGHWAY DEPARTMENT PLANS DIVISION			Rev
RAILROAD CROSSING SIGNS			
Drawn	D.G. 12-66	Drawing No.	
Traced	S.L.T. 3-67		
Checked	J.P.O. JPO 5-68	C-20.01	
Approved Engr. Plans	G Weidenbach 5-68		

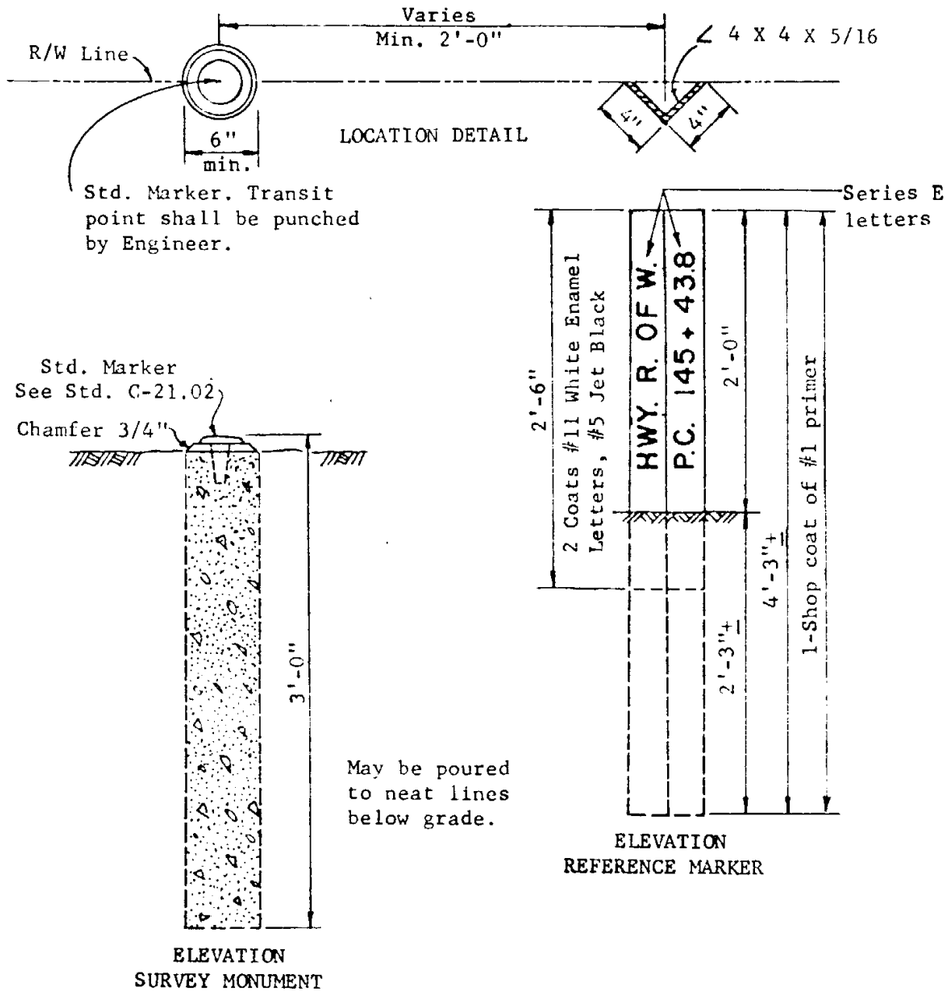

RIGHT OF WAY MARKER

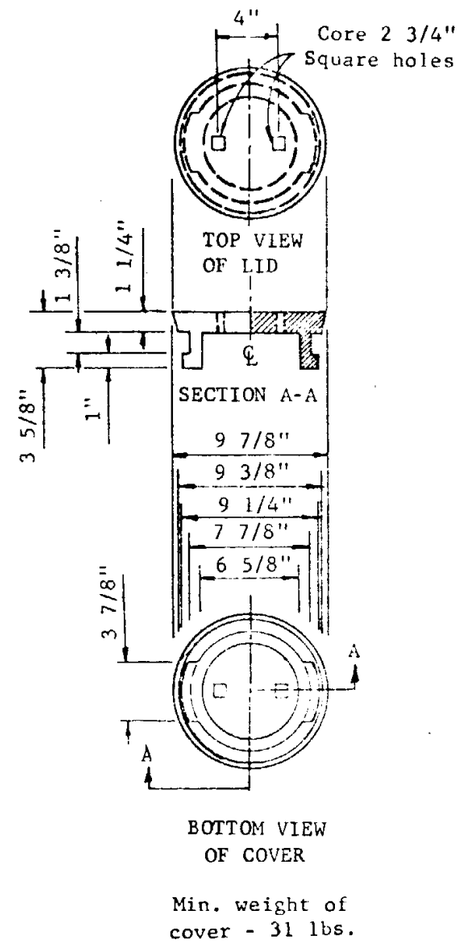

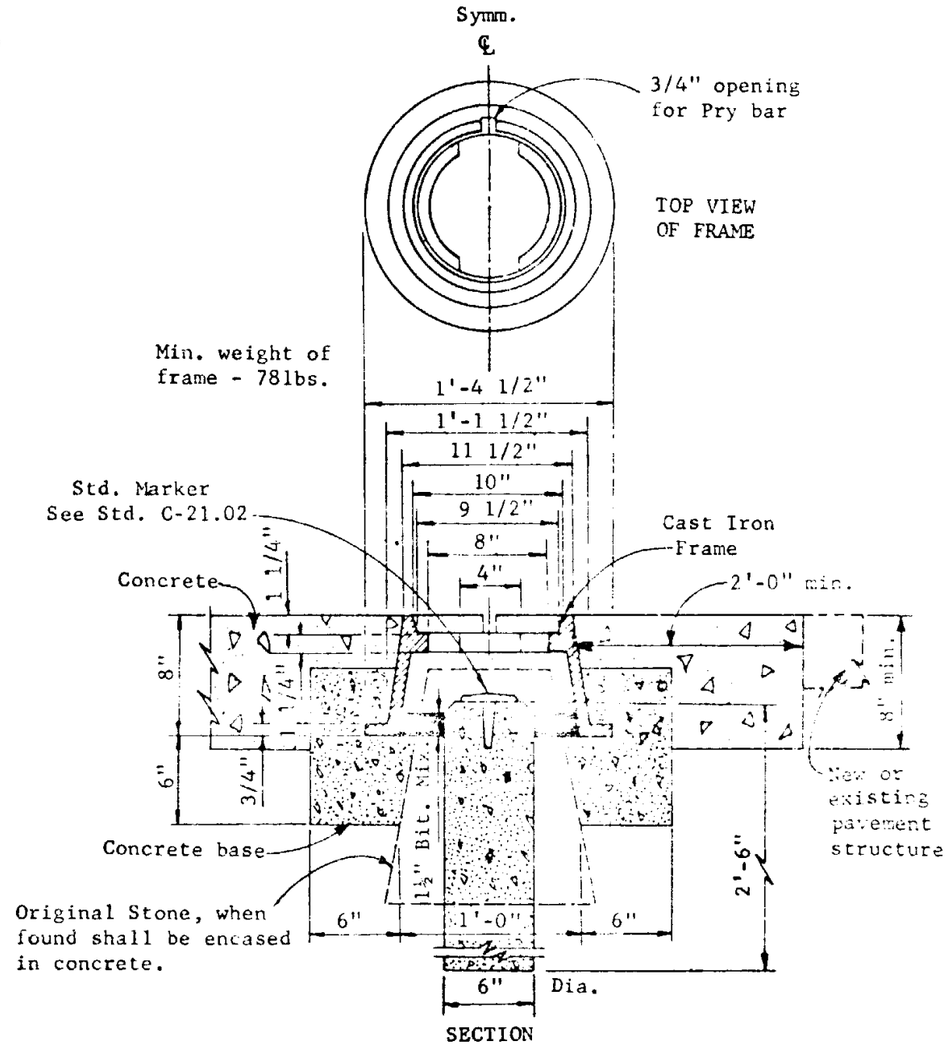

SURVEY MONUMENT, FRAME AND COVER

GENERAL NOTES

A Survey Monument, Frame and Cover, complete and in place, shall be considered as a unit. In bituminous pavement, frame and cover shall be set after A. C. is placed.

A Right of Way Marker, consisting of Survey Monument and Reference Marker, complete and in place, shall be considered as a unit. Right of Way Markers shall be placed as shown on Plans or as directed by the Engineer.

All concrete shall be Class A.

ARIZONA HIGHWAY DEPARTMENT
PLANS DIVISION

SURVEY MONUMENT, FRAME AND COVER RIGHT OF WAY MARKER

Drawn	11-45	Drawing No.
Traced	S.L.T. 3-67	
Checked	J.P.C. 5-68	C-21.01
Approved Engr. Plans		

Rev

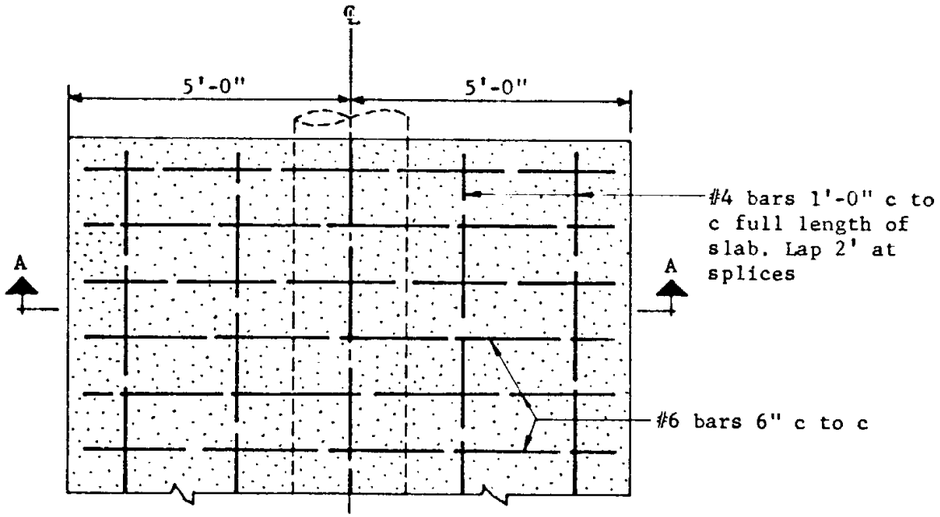

PLAN

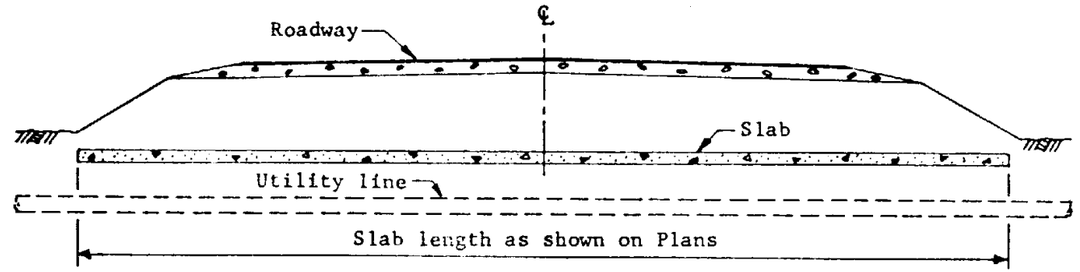

CROSS SECTION

FOR SINGLE INSTALLATION

Quantities per ft. of slab length	
Concrete	Reinforcing Steel
0.31 C.Y.	35.22 lbs.

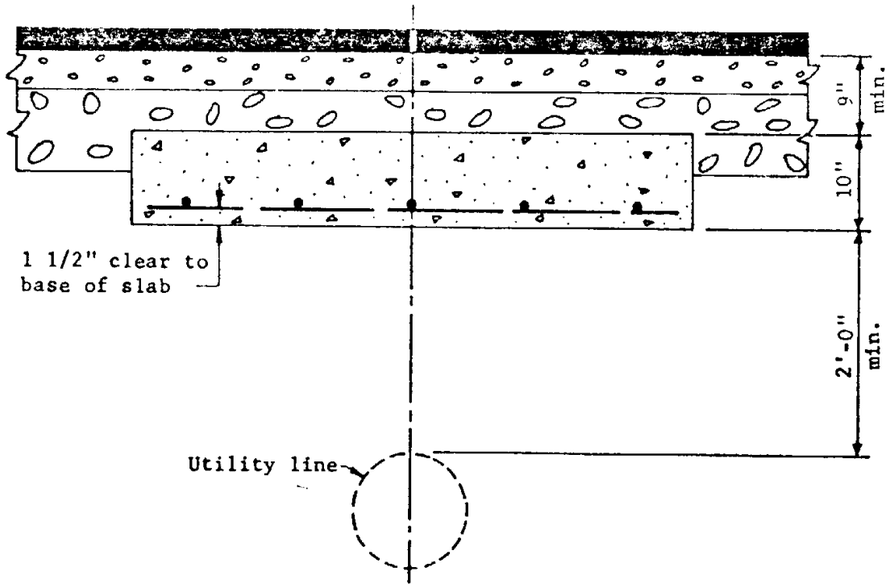

SECTION A-A

GENERAL NOTES
Concrete shall be Class A.

ARIZONA HIGHWAY DEPARTMENT
PLANS DIVISION

SLAB OVER UTILITY LINE

Drawn	L.O.M. 5-65	Drawing No.
Traced	D.G. 3-67	C-22.01
Checked	J.P.O. JPO 5-68	
Approved Engr. Plans	D Heidecker 5-68	

Rev