620.03

STATE OF ARIZONA

STATE HIGHWAY DEPARTMENT

ROADWAY STANDARDS

1959

CONSTRUCTION "C" STANDARDS

ARIZ. HWY. DEPT. LIBRARY
PHOENIX, ARIZONA

HIGHWAY PLANS SERVICES

COPY NO. _____

ISSUED TO _____

Orig.
620.03
2 c
Copy 1

ARIZONA STATE HIGHWAY DEPARTMENT — PLANS DIVISION
INDEX TO CONSTRUCTION STANDARDS

Revised Jan. 4, 1960

DRWG. NO.	SUBJECT
C-23	BANK PROTECTION, RAIL AND WIRE
C-23-A	BANK PROTECTION, RIPRAP
C-38	BENCH MARKER
C-25	CATCH BASIN NO. 1
C-26	CATCH BASIN NO. 2
C-27-1	CATCH BASIN NO. 3 AND NO. 3A (SUPERSEDES C-27)
C-27-A	CATCH BASIN NO. 4
C-27-B	CATCH BASIN NO. 5
C-24	CATCH BASIN, CORRUGATED METAL
C-14	CATTLE GUARD
C-14-R	CATTLE GUARD, RAILROAD
C-14-X	CATTLE GUARD, RANCH
C-20	CONCRETE CURB AND GUTTER
C-19	CONCRETE PAVEMENT JOINTS, LONGITUDINAL
C-18	CONCRETE PAVEMENT JOINTS, TRANSVERSE
C-33-1	CONCRETE PIPE INSTALLATION AND DETAIL X ENCASEMENT (SUPERSEDES C-33)
C-38	CONCRETE CONSTRUCTION MARKER
C-24	CORRUGATED METAL PIPES, PERFORATED
C-13-A	CORRUGATED METAL AND STRUCTURAL PLATE PIPE INSTALLATION
C-21	CURB AND GUTTER MEASUREMENT
C-3	CURBS, EMBANKMENT
C-4	DITCHES AND CHANNELS
C-4	DYKES
C-17-A	FENCE, CHAIN LINK
C-17-B	FENCE, BARRIER
C-15	FENCE AND GATES, WOOD POSTS
C-16	FENCE AND GATES, STEEL POSTS
C-16-A	FENCE, SUPPLEMENTAL DETAILS
C-17	FENCE, INDUSTRIAL TYPE
C-5	FORD TYPE A, CONCRETE WALLS
C-6	FORD TYPE B, WOOD WALLS
C-8-2	GUIDE POSTS (SUPERSEDES C-8)
C-3	GUTTERS, EMBANKMENT AND CUTS
C-12	HEADWALLS, CEMENT RUBBLE AND PLAIN CONCRETE
C-9-A	HEADWALLS, IRRIGATION
C-9	HEADWALLS, REINF. CONC., STRAIGHT, "L" AND "U" TYPE
C-10	HEADWALLS, REINF. CONC., WING TYPE
C-11	HEADWALLS, REINF. CONC., DROP INLET

DRWG. NO.	SUBJECT
C-42	INSTALLATION OF ROAD GUARD AT STRUCTURE APPROACHES
C-9-A	IRRIGATION HEADWALLS
C-32	IRRIGATION GATES AND VALVE
C-31	IRRIGATION STANDPIPE NO. 1 AND NO. 2
C-30-1	MANHOLE BASE STRUCTURE AND MANHOLES NO. 1, 2 AND 3 (SUPERSEDES C-30)
C-28	MANHOLE FRAME AND COVERS
C-29	MANHOLE FRAME AND COVER NO. 2 (THIS STANDARD ELIMINATED)
C-38	MARKERS - PROJECT, BENCH AND CONCRETE CONSTRUCTION
C-1	MARKERS - RIGHT OF WAY
C-8-2	MILE POST
C-39	PARABOLIC CROWN FORMULA AND TABLES
C-34	PAVEMENT CUT AND REPLACEMENT
C-41	PLANT CONSERVATION
C-13	PIPE CULVERT INSTALLATION
C-38	PROJECT MARKER
C-35	RAILROAD CROSSING, FLANGE RAIL
C-36	RAILROAD CROSSING, PLANKED
C-37	RAILROAD CROSSING SIGNS
C-22	RETAINING WALLS, RUBBLE MASONRY
C-23-A	RIPRAP, PLAIN, GROUTED AND SACK CONCRETE
C-7-1	ROAD GUARD (SUPERSEDES C-7)
C-41	ROCK AND EARTH CUTS
C-1	RIGHT OF WAY MARKERS
C-20	SIDEWALK
C-8-2	SIGN POSTS
C-2	SLOPES, CUT, EMBANKMENT AND ROUNDING
C-2-A	SLOPES, CUT, EMBANKMENT AND ROUNDING - INTERSTATE
C-40	SLOPE ROUNDING GAUGE (THIS STANDARD ELIMINATED)
C-3	SLOPE SPILLWAYS
C-21	STREET INTERSECTION GRADES
C-1	SURVEY MONUMENT AND COVER
C-13-A	STRUTS FOR CORRUGATED METAL PIPES
C-43	SYMBOLS
C-3	TURNOUTS, PAVED
C-20	VALLEY GUTTER

12-1-58 L.O.M.
1-4-60

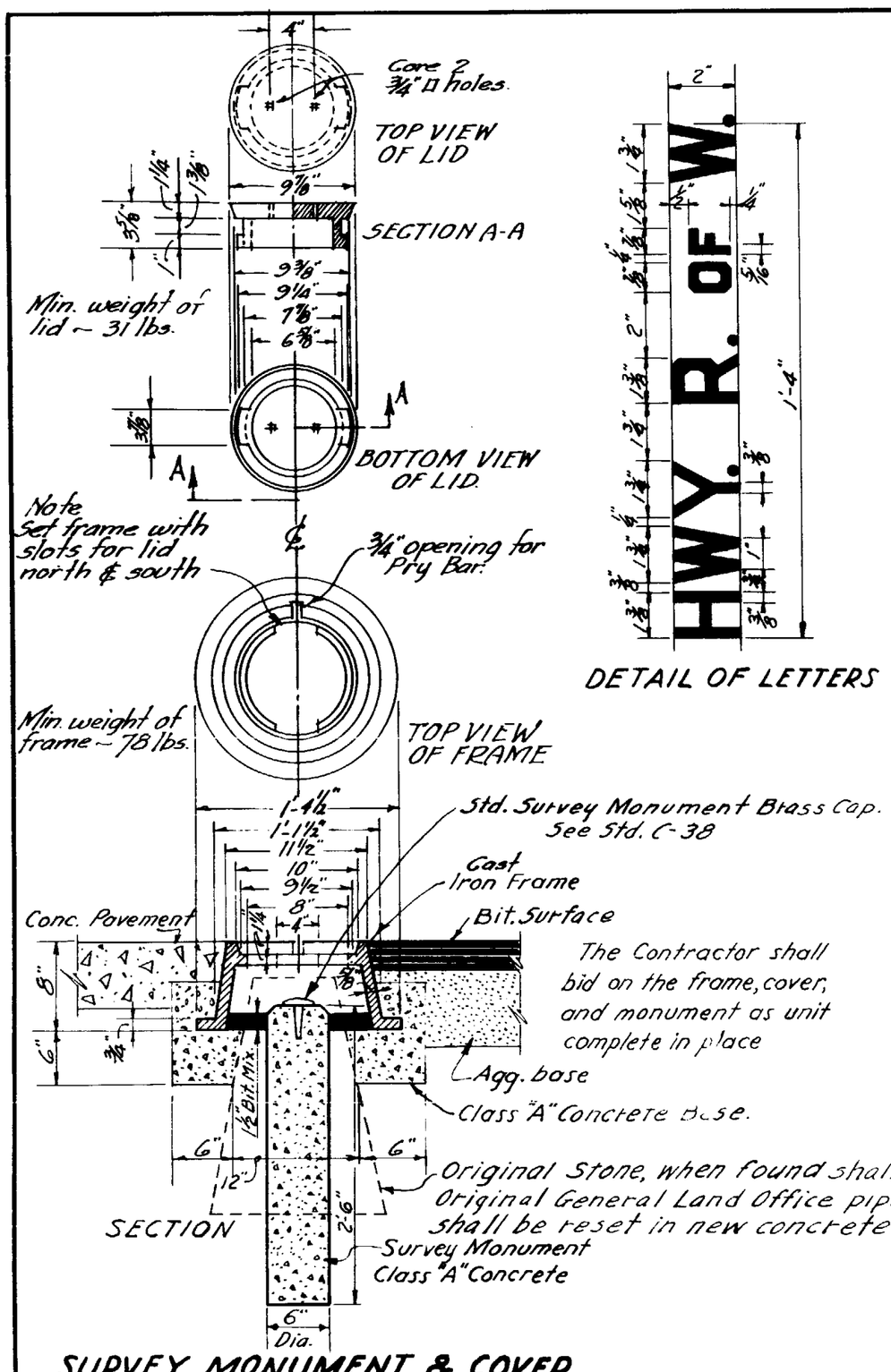

SURVEY MONUMENT & COVER

DETAIL OF LETTERS

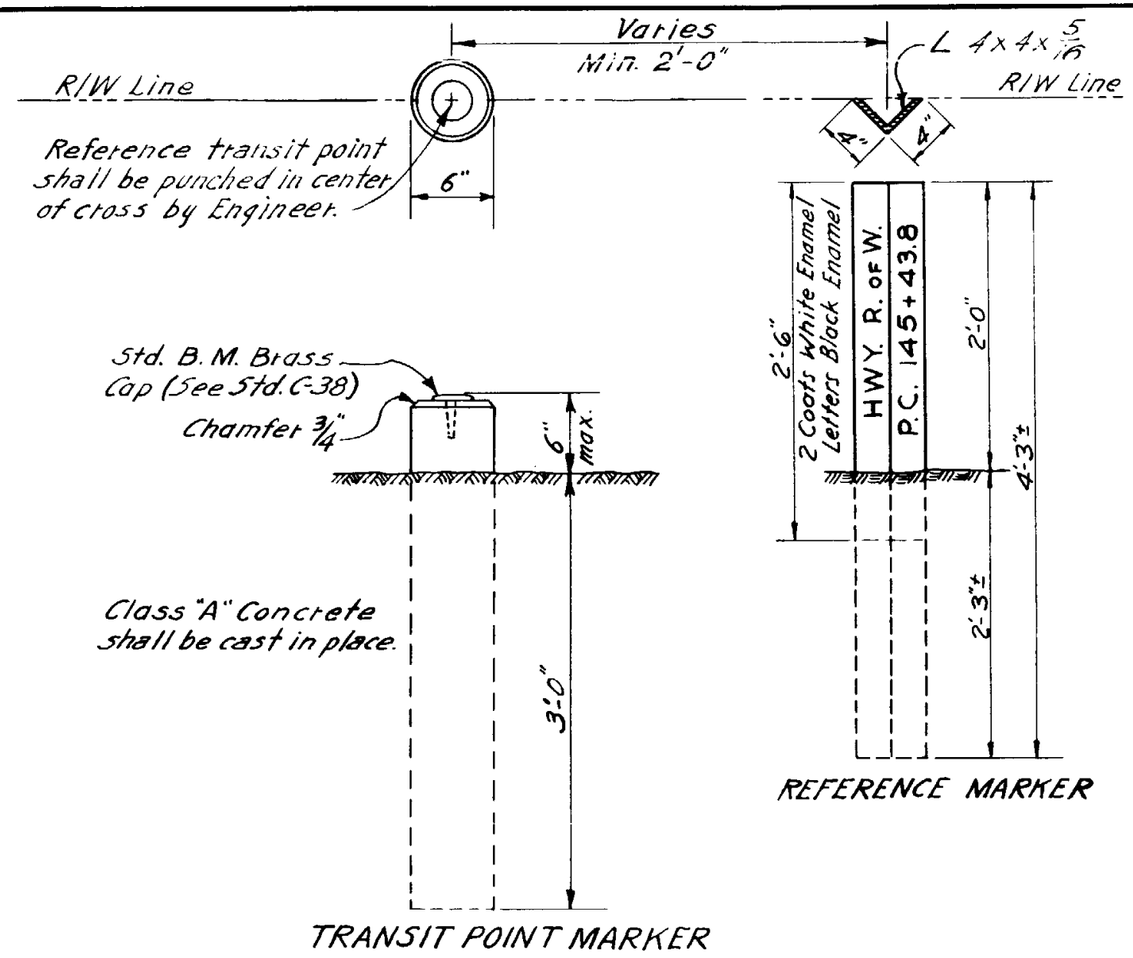

RIGHT OF WAY MARKER

Note:
R/W markers shall be placed where shown on Plans or as directed by Engineer. R/W marker shall consist of transit point and reference marker.

ARIZONA HIGHWAY DEPARTMENT PLANS DIVISION	REV. 3/17/50 2/4/54 6/19/55 12/1/58
SURVEY MONUMENT AND COVER RIGHT OF WAY MARKERS	
DRAWN TRACED GH Nov. 1945 CHECKED HHWesseel APPROVED ENGR. PLANS HH Wessel	DRAWING NO. C-1

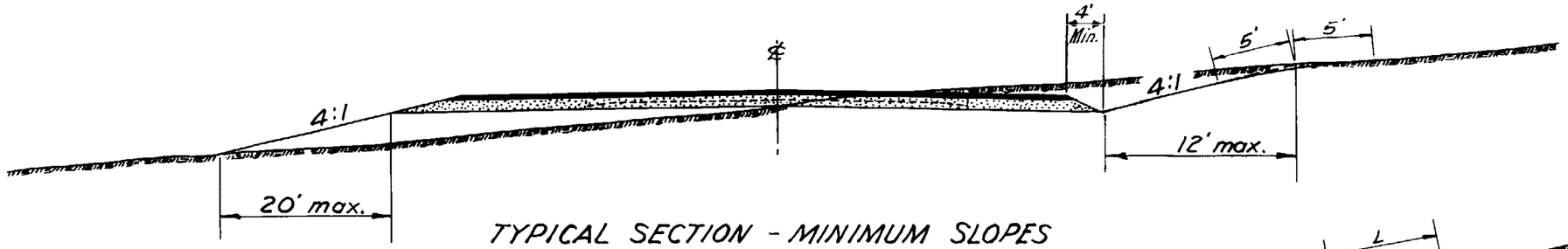

TYPICAL SECTION - MINIMUM SLOPES

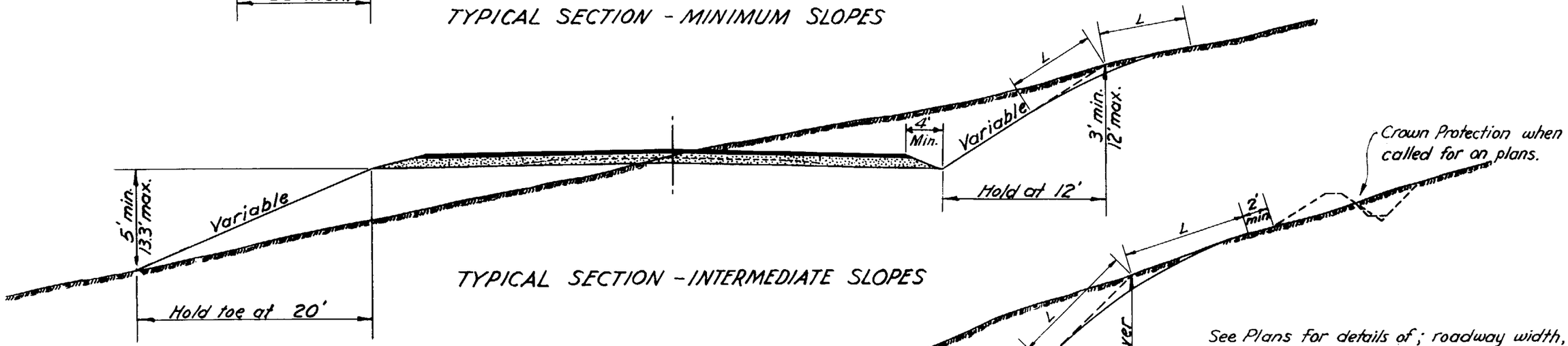

TYPICAL SECTION - INTERMEDIATE SLOPES

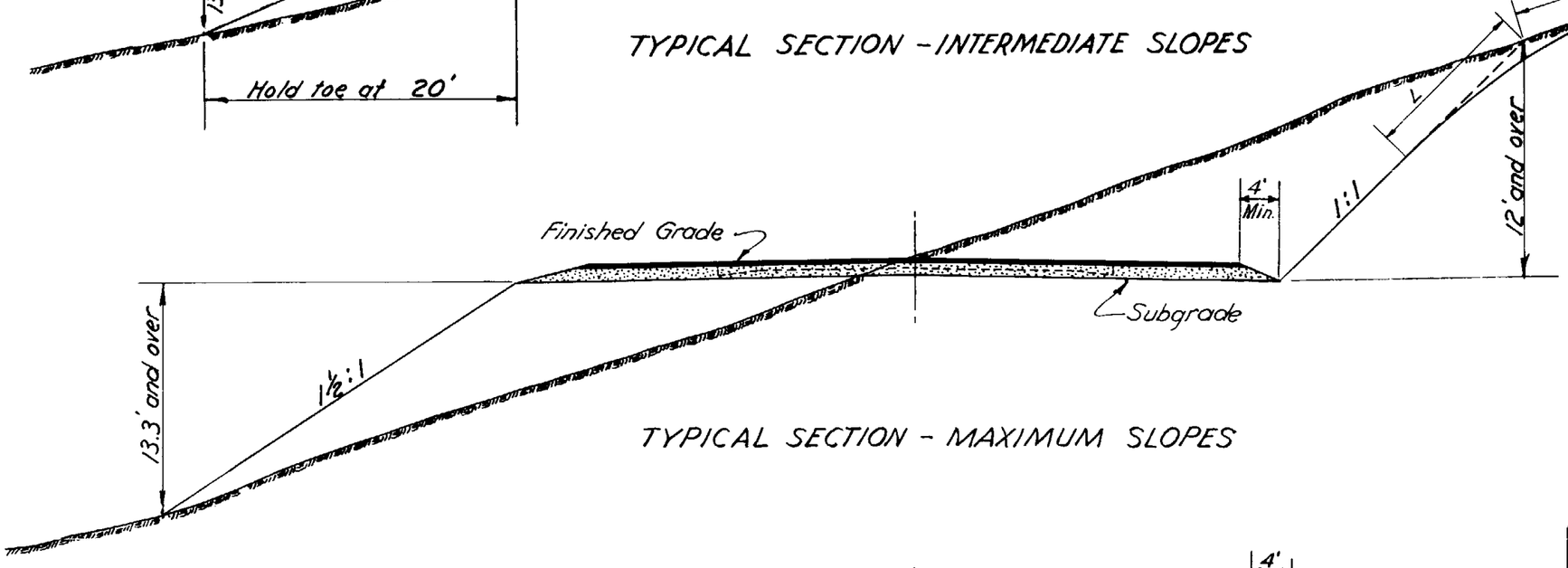

TYPICAL SECTION - MAXIMUM SLOPES

See Plans for details of; roadway width, cut ditch, type and thickness of roadway surfacing, superelevation, and curve widening.

Standard Crown Slope for P.C.Concrete 0.01' per foot; for Bit. Surf. Treat. and Bit. Mix. Surf. 0.015' per foot.

Standard Cut and embankment slopes as shown on this sheet may be superseded by special slopes where shown on plans.

For Cuts up to 6' use 5' semi-tangents (L) for slope rounding. For each additional foot of cut add 1' to semi-tangent to 11' maximum. Finish with approved drag so that the ground will not have a scarred appearance.

Do not daylight small negative slopes, but round as indicated.

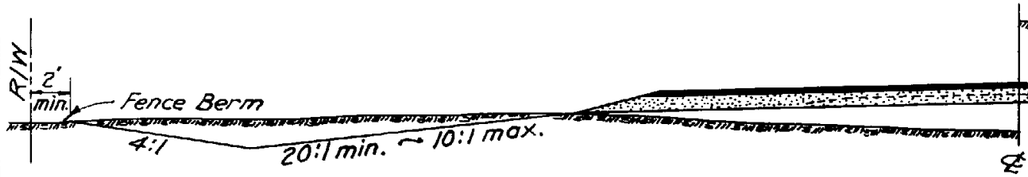

HALF SECTION - SIDE BORROW

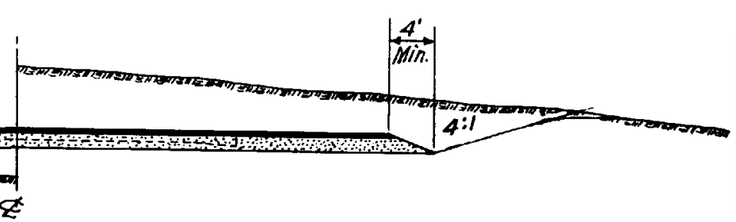

HALF SECTION-MINOR CUTS

ARIZONA HIGHWAY DEPARTMENT
PLANS DIVISION

SLOPES

SLOPE ROUNDING

DRAWN	GH Nov. 1945	DRAWING NO.
TRACED	GH Nov. 1945	C-2
CHECKED	HHW	
APPROVED PLANS ENG'R.	HH Wessel	

REV.
2/4/55
6/10/55
12/1/58

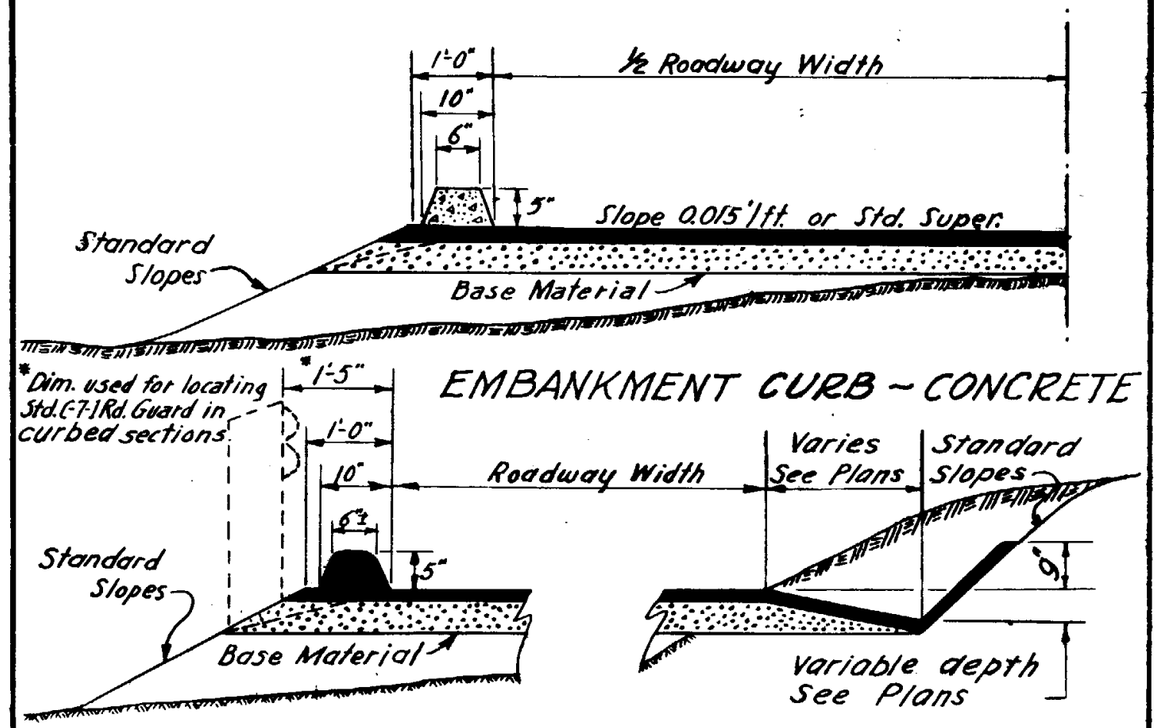

EMBANKMENT CURB ~ CONCRETE

EMBANKMENT CURB BITUMINOUS

PAVED GUTTER IN CUTS BITUMINOUS

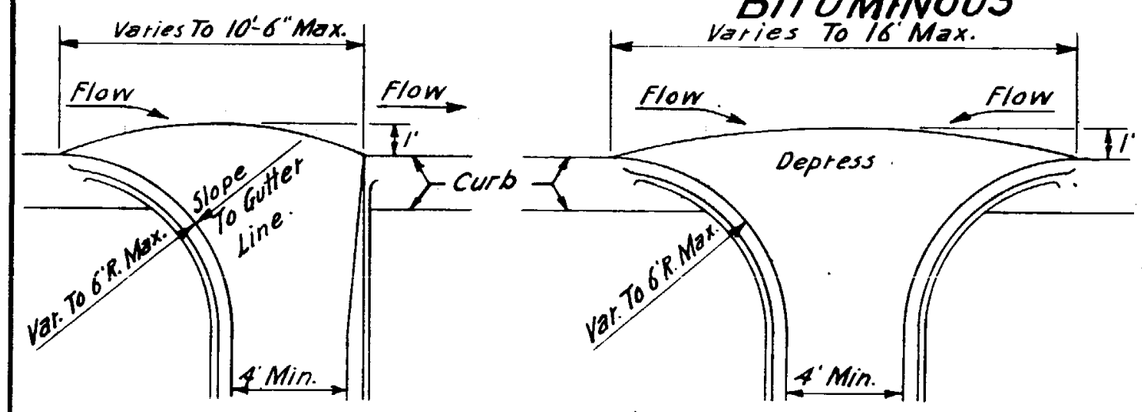

SPILLWAY INLETS

Note:
spillway inlets and spillways shall be of the same material as the curb.
Maximum spacing of spillways shall not exceed 400'

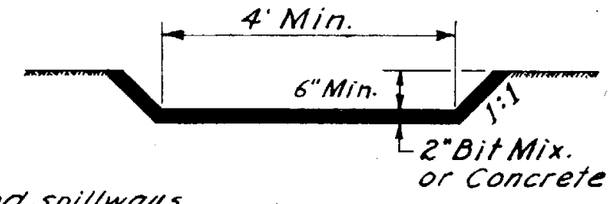

SPILLWAY

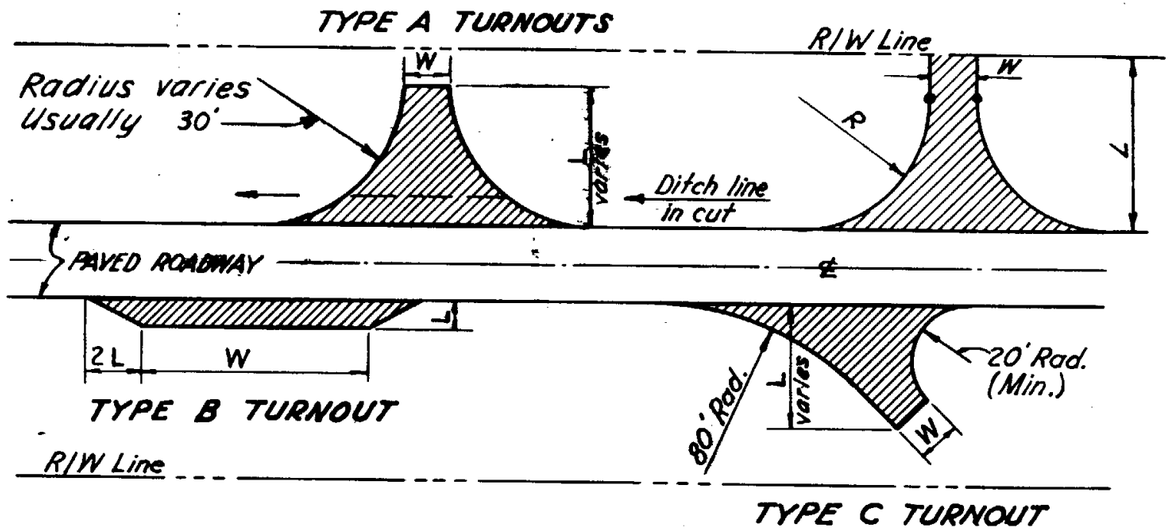

PAVED TURNOUTS

NOTES

W indicates width of paved surface of turnout.
L indicates length of paved surface of turnout.
Farm road turnout, 10' min. width. (W)
County road turnout, 20' min. width. (W)
Size and type of turnouts is noted on plans as follows: W, L, Surface, and Type (12'×30' B.M.S. Type A)
Base material thickness under turnouts is the same as shown on the roadway section, unless otherwise noted.
Any excavation or embankment for turnouts is included in the roadway quantities.
Turnouts are to be placed where shown on plans, or as directed by the Engineer.

ARIZONA HIGHWAY DEPARTMENT
PLANS DIVISION

EMBANKMENT CURBS, SPILLWAY INLETS & SPILLWAYS PAVED TURNOUTS

DRAWN	GH Nov. 1945	DRAWING NO.
TRACED	GH Nov. 1945	C-3
CHECKED	HHW	
APPROVED ENGR. PLANS	HH Wessel	

REV. 3/17/50 2/4/55 4/20/55 6/10/55 12/1/58 1/4/60

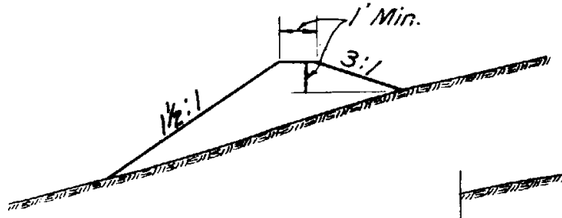

CROWN DYKE

To be paid for by lineal measure.

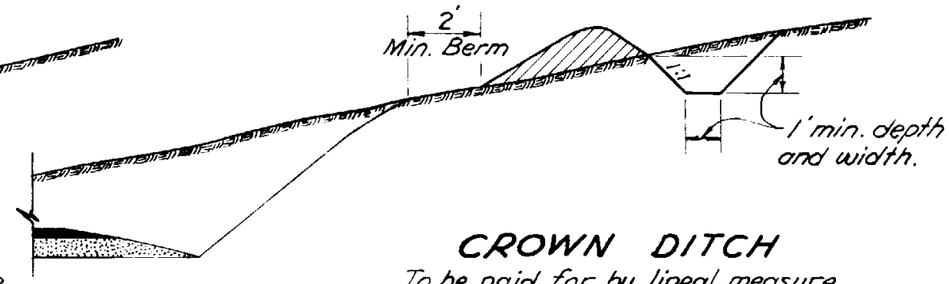

CROWN DITCH

To be paid for by lineal measure

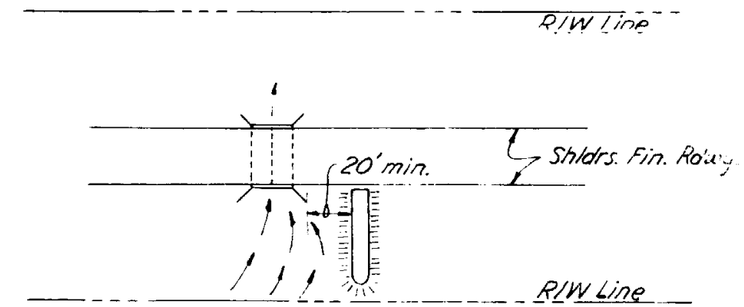

TYPICAL DYKE INSTALLATION AT STRUCTURE

Dykes at structures to be so placed that they create a water cushion.

Crown protection should be constructed in such a manner that the flow of intercepted water shall not exceed 0.5%.

Grader ditch section may be used or a ditch section similar to above may be made in any manner approved by the Engineer.

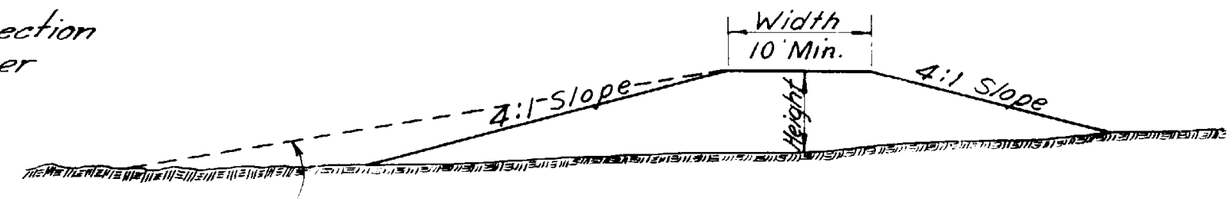

TYPE B DYKE

Note ~ When necessary the slope may be flattened to 6:1 with bit. mix. or soil cement protection as called for on plans.

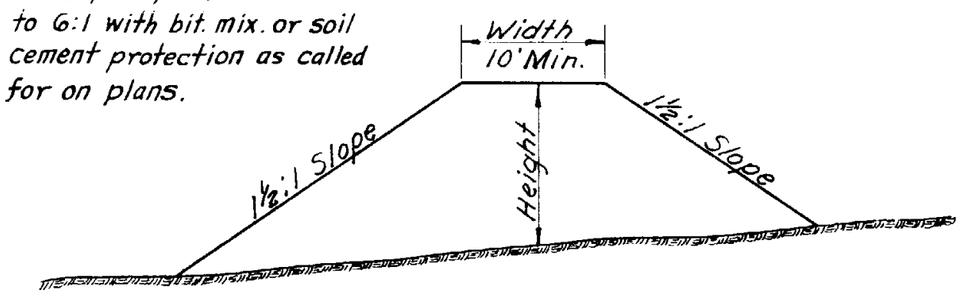

TYPE A DYKE

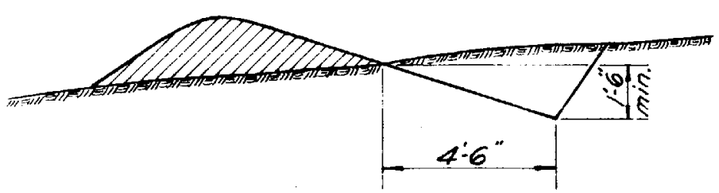

GRADER DITCH

To be paid for by lineal measure

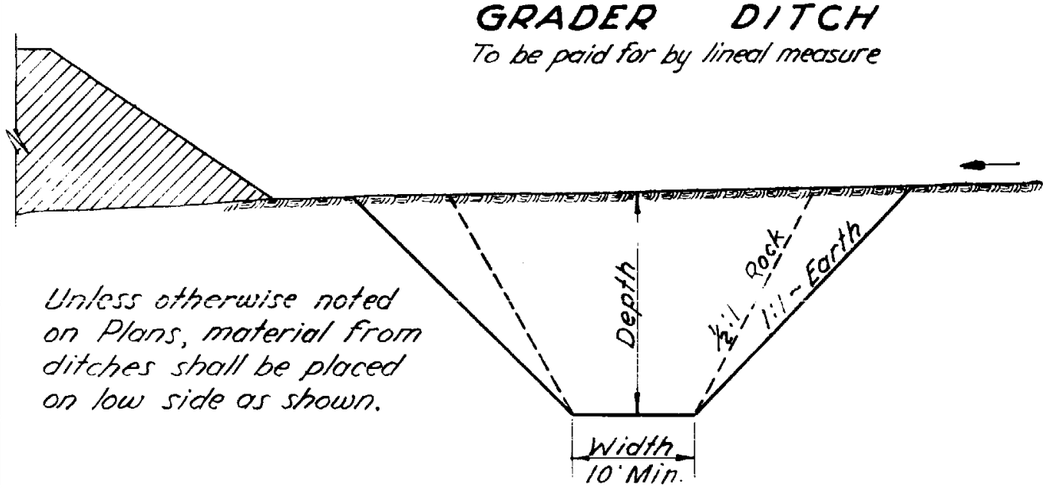

Unless otherwise noted on Plans, material from ditches shall be placed on low side as shown.

DITCH OR CHANNEL

Dimensions of ditches and dykes as shown on plans are respectively width, depth or height, and length.

ARIZONA HIGHWAY DEPARTMENT PLANS DIVISION			REV. 8/16/55 12/1/58
DITCHES AND DYKES			
DRAWN	GH Dec. 1945	DRAWING NO.	
TRACED	GH Dec. 1945	C-4	
CHECKED	HHW		
APPROVED PLANS ENG'R.	HH Wessel		

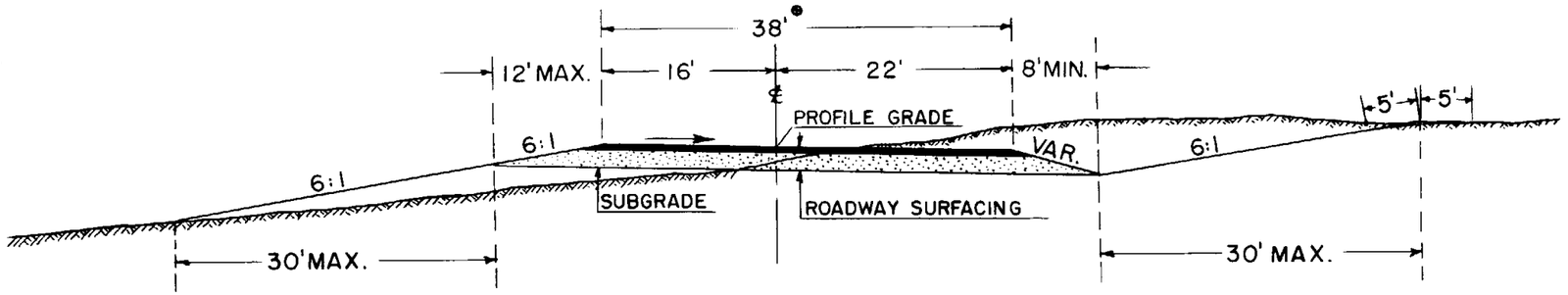

TYPICAL SECTION – MINIMUM SLOPES

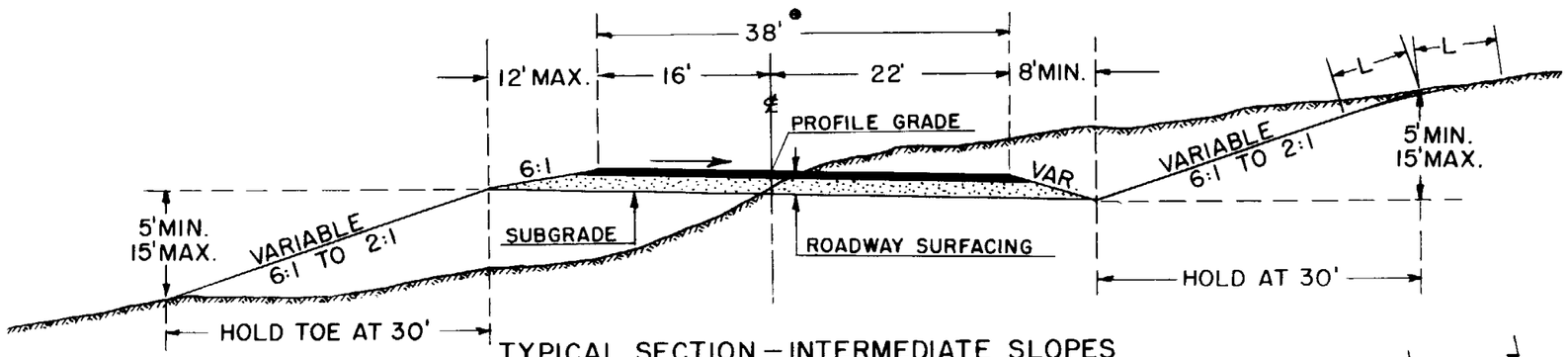

TYPICAL SECTION – INTERMEDIATE SLOPES

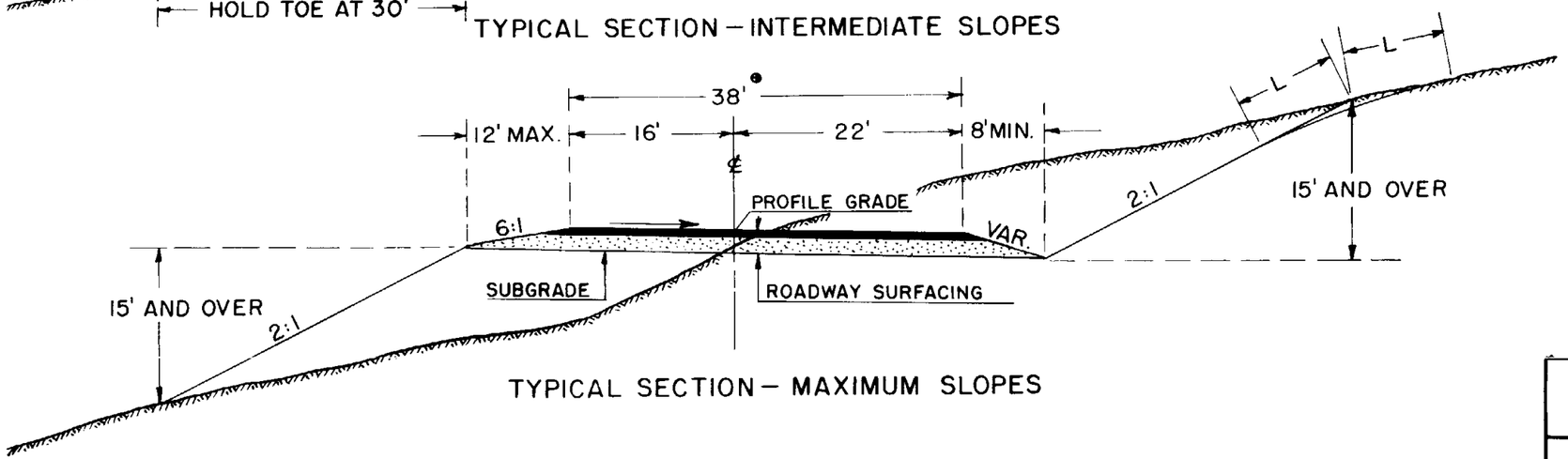

TYPICAL SECTION – MAXIMUM SLOPES

NOTE – TWO LANE ONE WAY ROADWAY SHOWN.
● 38' FOR TWO LANE ONE WAY ROADWAY.
50' FOR THREE LANE ONE WAY ROADWAY.

NOTES:

SEE PLANS FOR DETAILS OF TYPE AND THICKNESS OF ROADWAY SURFACING, WIDTH OF CUT DITCH AND WIDTH OF SHOULDER.

STANDARD CUT AND EMBANKMENT SLOPES AS SHOWN ON THIS SHEET MAY BE SUPERSEDED IN ROCK EXCAVATION OR OTHER SPECIAL CONDITIONS.

STANDARD SLOPE FOR P. C. CONCRETE 0.01' PER FOOT, FOR BIT. MIX. SURFACE 0.015' PER FOOT.

FOR CUTS UP TO 6' USE 5' SEMI-TANGENTS (L) FOR SLOPE ROUNDING. FOR EACH ADDITIONAL FOOT OF CUT ADD 1' TO SEMI-TANGENT TO 11' MAXIMUM. FINISH WITH APPROVED DRAG SO THAT THE GROUND WILL NOT HAVE A SCARRED APPEARANCE.

ARIZONA HIGHWAY DEPARTMENT
PLANS DIVISION

INTERSTATE DESIGN SLOPES

DRAWN	W. E. P. Feb. 57	DRAWING NO.
TRACED	L. O. Moe 8-8-57	C-2-A
CHECKED	CB 3-25-58	
APPROVED PLANS ENG'R.	H. Heidecker	

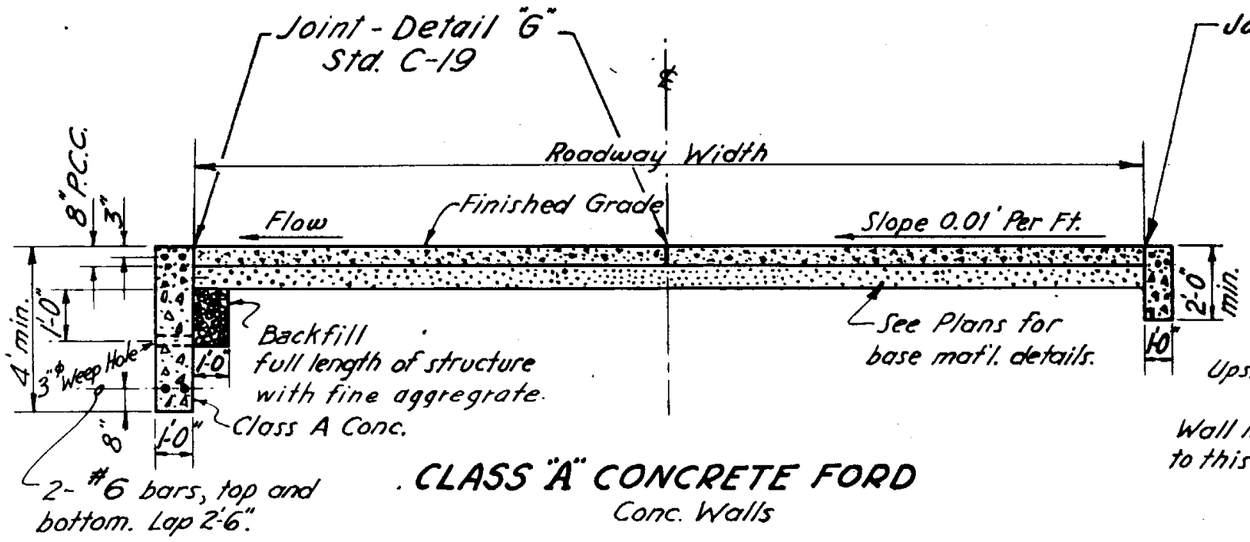

CLASS "A" CONCRETE FORD
Conc. Walls

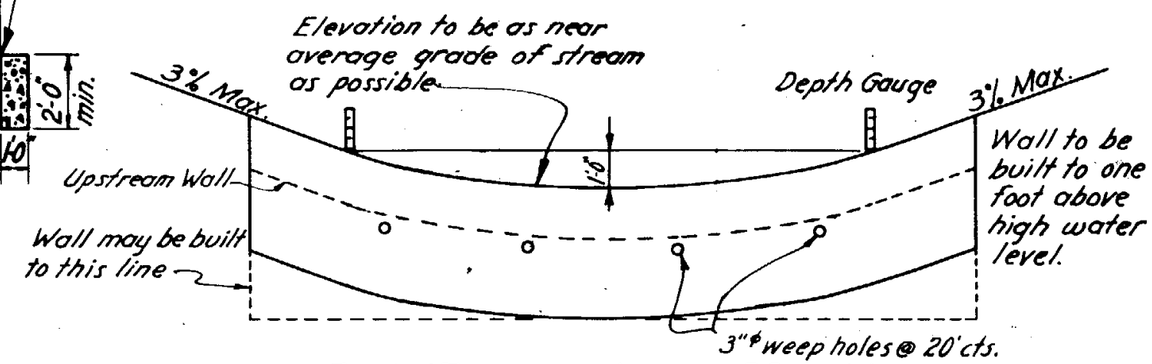

ELEVATION LOOKING UPSTREAM

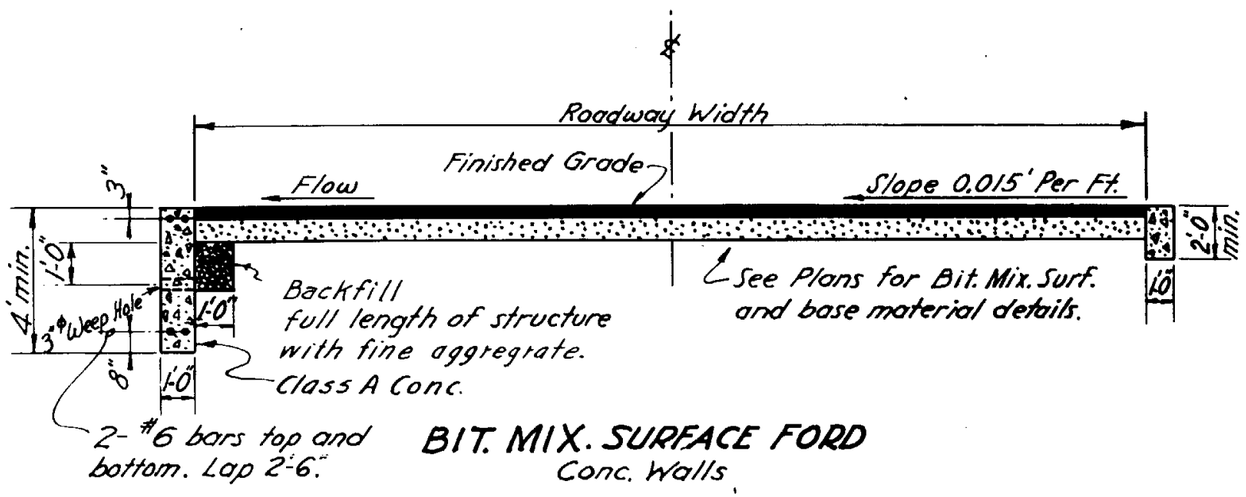

BIT. MIX. SURFACE FORD
Conc. Walls

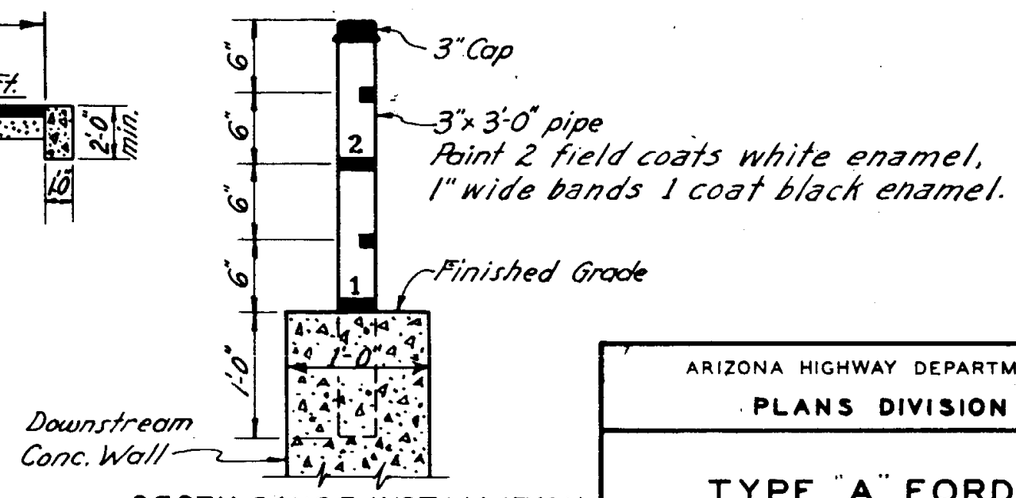

DEPTH GAUGE INSTALLATION

ARIZONA HIGHWAY DEPARTMENT PLANS DIVISION		REV. 12/1/58 1/4/60
TYPE "A" FORD		
DRAWN	C.B.B. July 1945	DRAWING NO.
TRACED	GH Nov. 1945	C-5
CHECKED	HHW	
APPROVED ENG'R. PLANS	HH Wessel	

Note — All timber shall be rough pressure treated and unpainted.
See Standard Specification -(1960) for allowable species and grading.

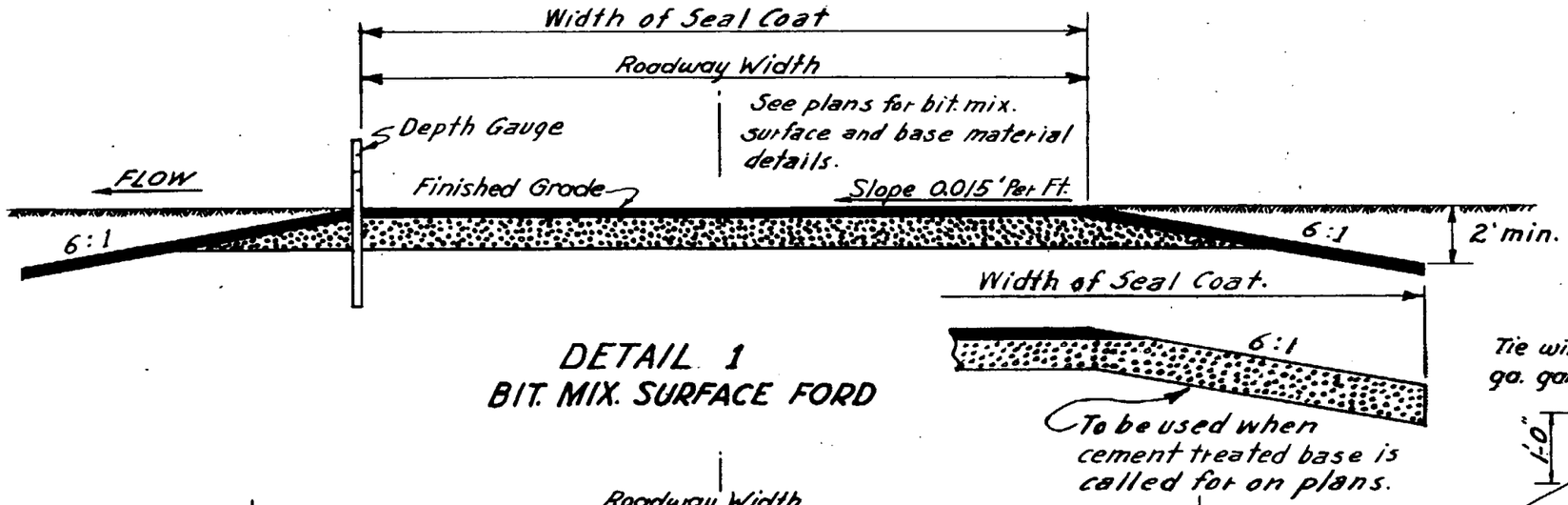

DETAIL 1
BIT. MIX. SURFACE FORD

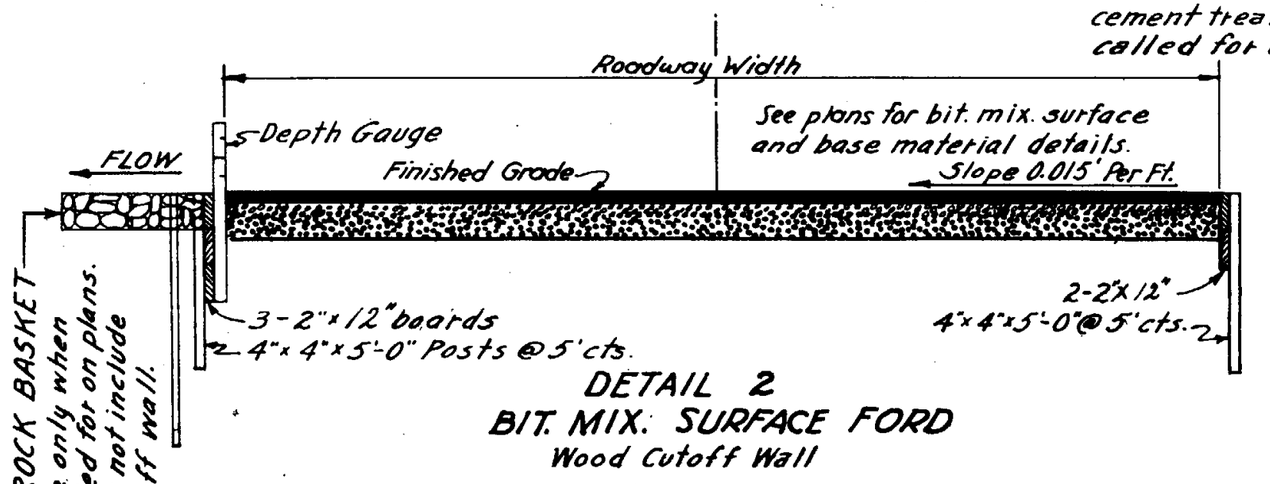

DETAIL 2
BIT. MIX. SURFACE FORD
Wood Cutoff Wall

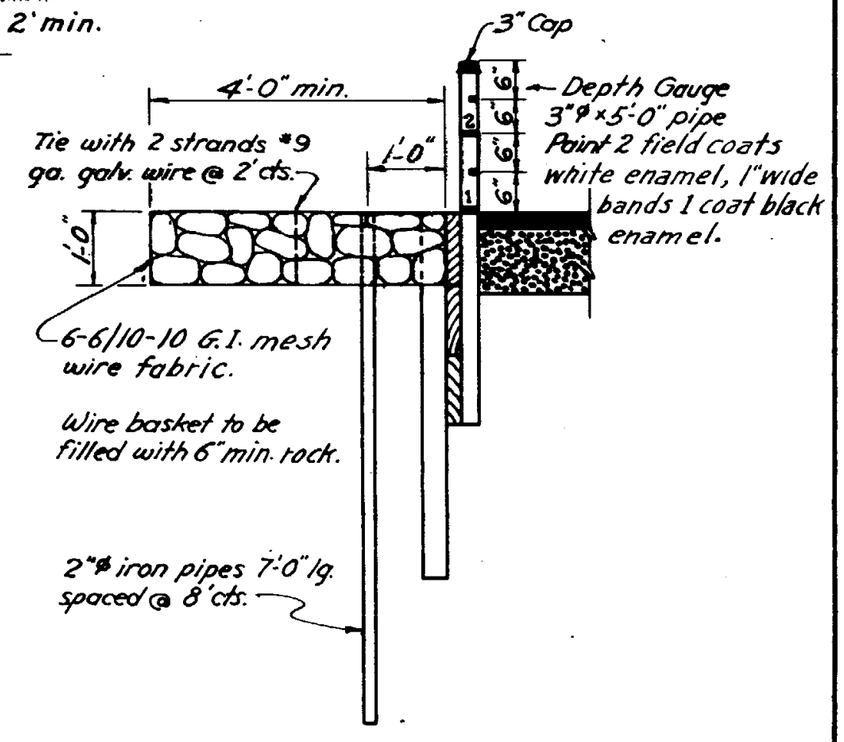

DETAIL OF
ROCK FILLED WIRE BASKET

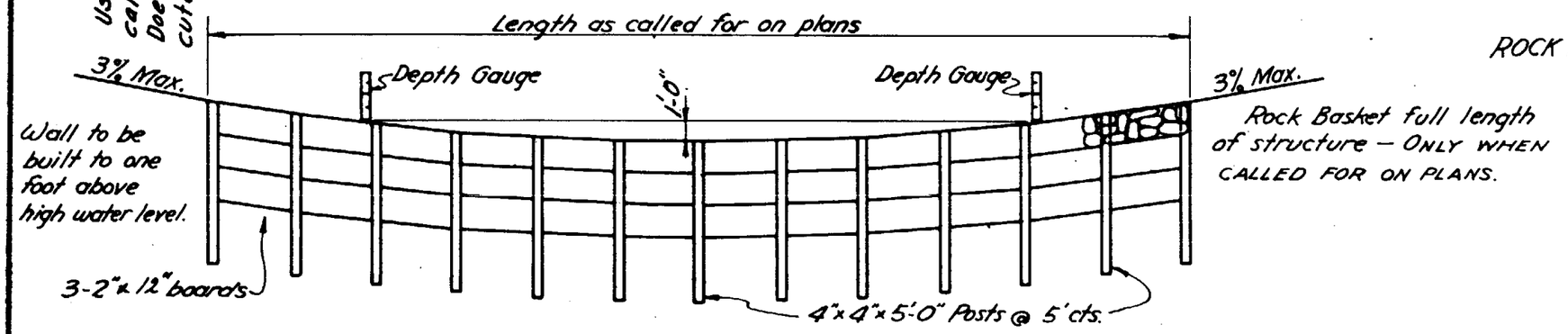

ELEVATION LOOKING UPSTREAM

ARIZONA HIGHWAY DEPARTMENT PLANS DIVISION			REV.
TYPE "B" FORD			3/17/50 8/17/55 12/1/58 1/4/60
DRAWN	C.B.B. July 1945	DRAWING NO.	
TRACED	GH Nov. 1945	C-6	
CHECKED	HHW		
APPROVED ENGR. PLANS	HH Wessel		

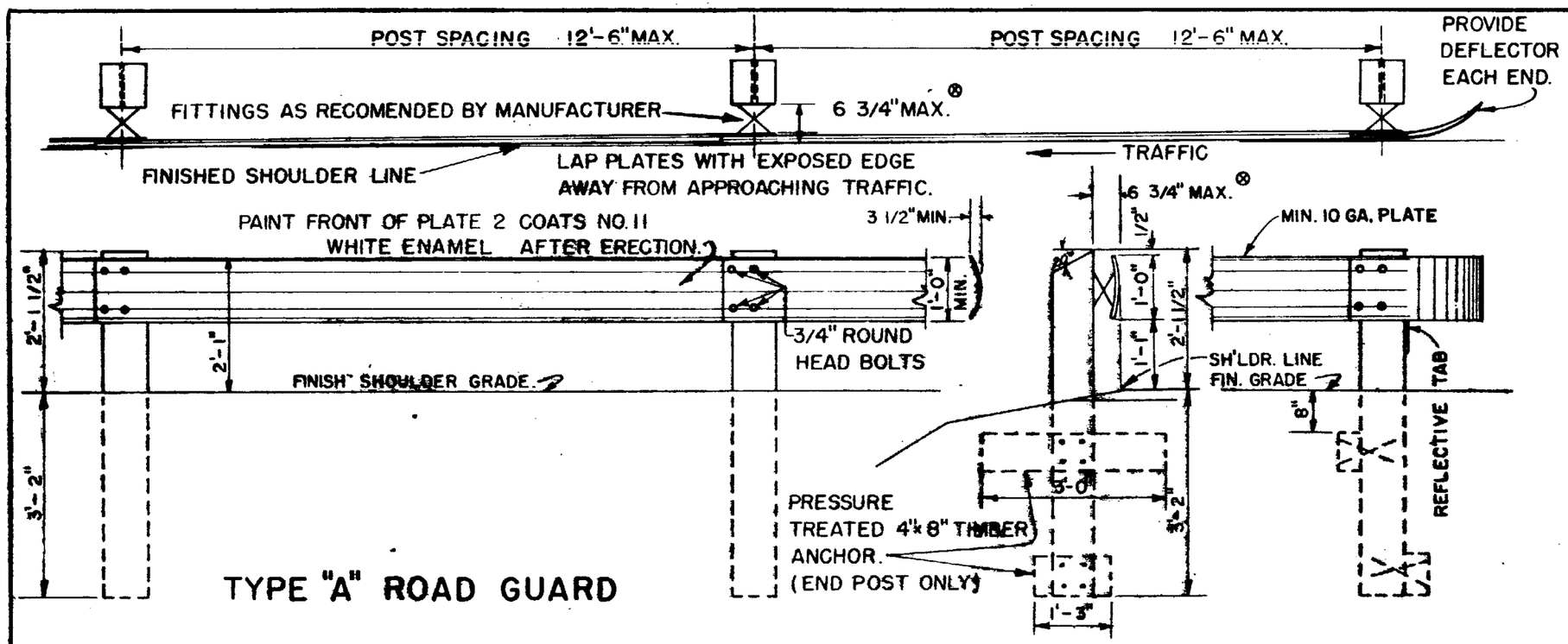

TYPE "A" ROAD GUARD

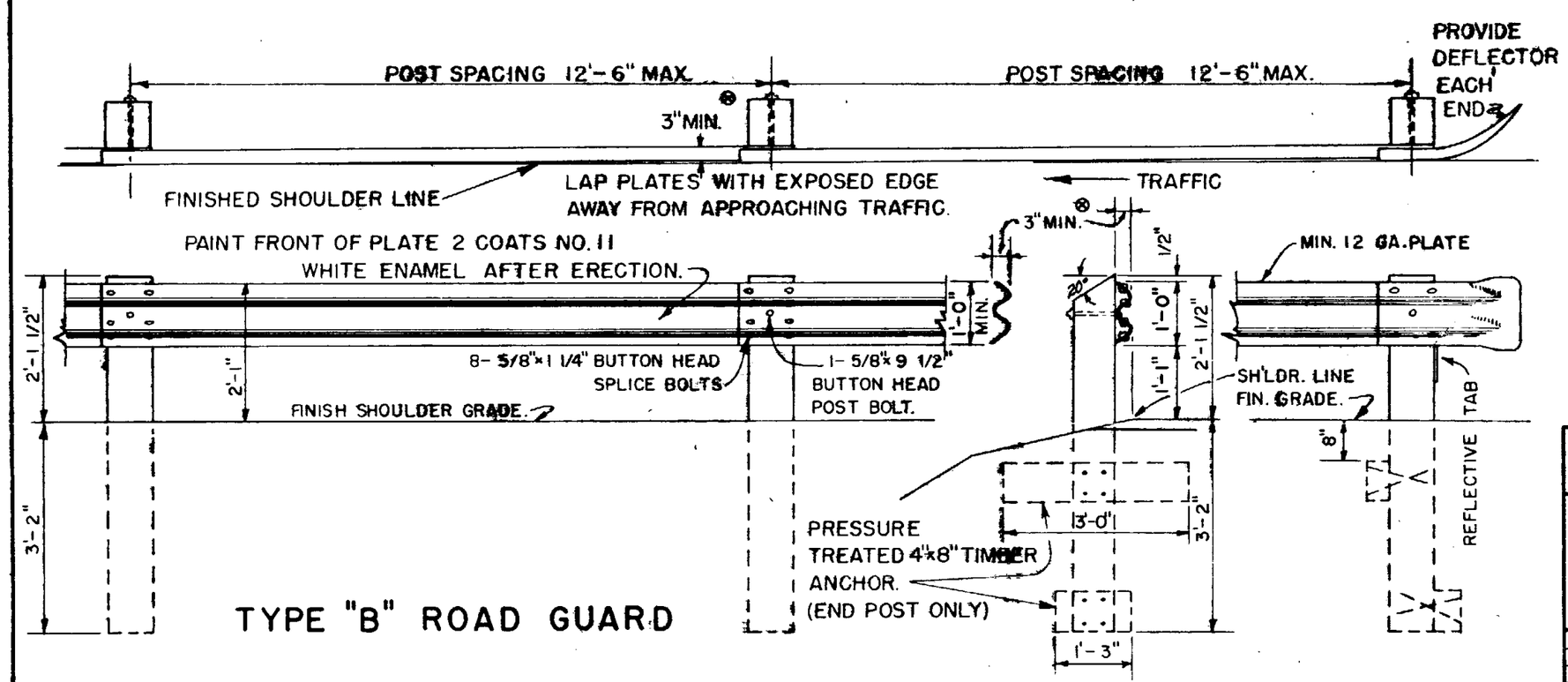

TYPE "B" ROAD GUARD

GENERAL NOTES

AFTER SUBMISSION AND APPROVAL OF BRACKETS AND PLATES, MANUFACTURER'S PLANS AND SPECIFICATIONS SHALL BE USED IN CONJUNCTION WITH STANDARD ERECTION DETAILS ON THIS DRAWING. IF SPRING SUPPORT BRACKET IS USED FOR TYPE "A" ROAD GUARD THE MINIMUM TENSILE STRENGTH SHALL BE 100,000 P.S.I.

POSTS SHALL BE NOMINAL 8"x8" ROUGH, PRESSURE TREATED AND UNPAINTED. SEE STANDARD SPECIFICATIONS 1960 FOR ALLOWABLE SPECIES AND GRADING.

HOLES SHALL BE BORED AND POST TOPS TRIMMED BEFORE TREATMENT.

UNLESS OTHERWISE CALLED FOR EITHER TYPE "A" OR "B" ROAD GUARD MAY BE USED.

PLACE 2"x 6" FLAT TOP SILVER REFLECTIVE SHEETING TAB ON END POSTS AND EVERY THIRD INTERMEDIATE POST FACING TRAFFIC.

FOR INSTALLATION AT STRUCTURE APPROACHES SEE STANDARD C-42

SEE STANDARD C-3 FOR POST SETTING IN CURBED SECTIONS.

THIS DETAIL SUPERSEDES DRAWING NO. C-7

ARIZONA HIGHWAY DEPARTMENT
PLANS DIVISION

REV. 1/4/60

ROAD GUARD

REDRAWN	L.O. Moe 9-1-57	DRAWING NO.
TRACED	L.O. Moe 9-1-57	C-7-1
CHECKED	[illegible]	
APPROVED ENGR. PLANS	G. Heidecker	

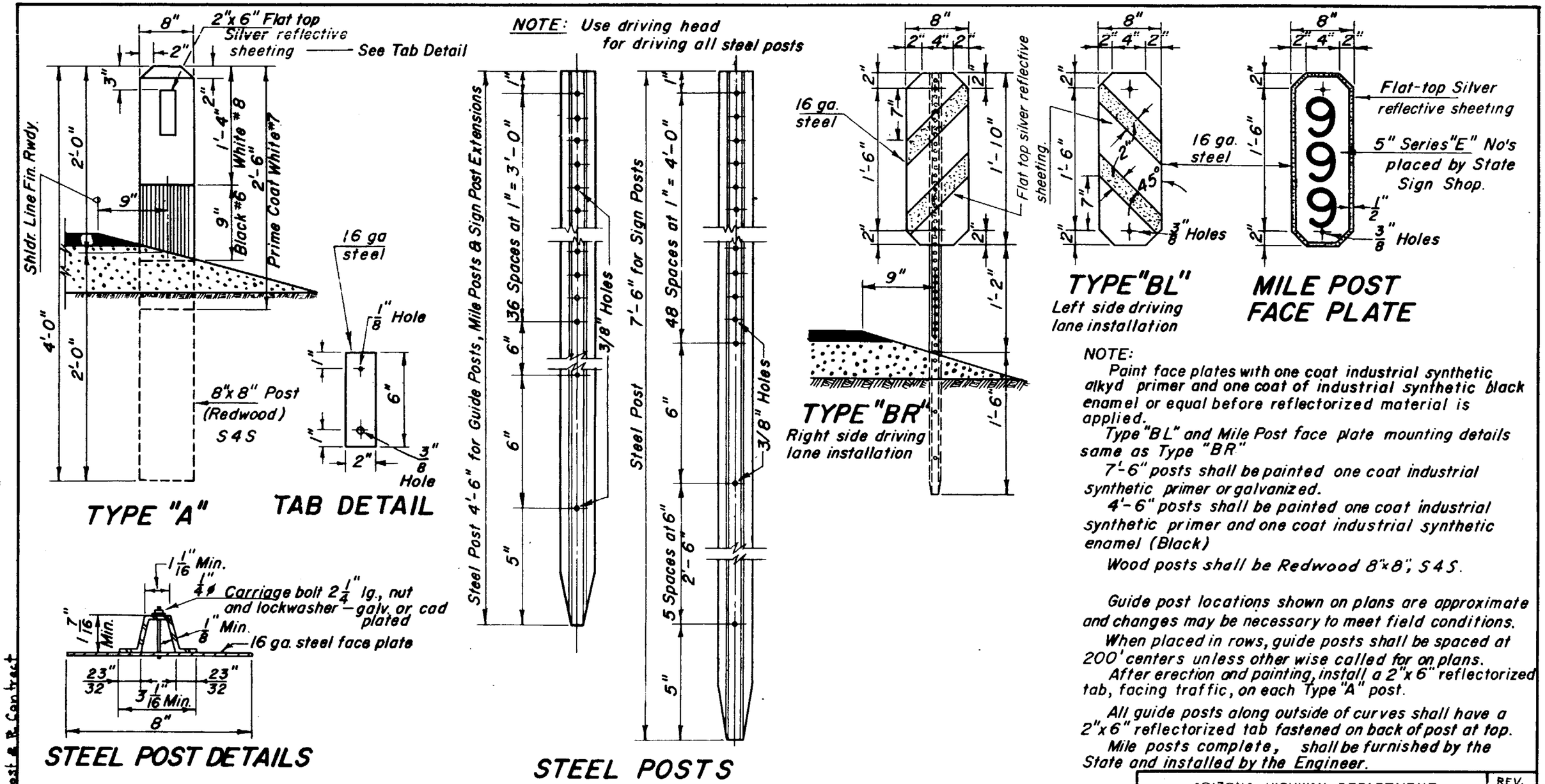

NOTE:

Paint face plates with one coat industrial synthetic alkyd primer and one coat of industrial synthetic black enamel or equal before reflectorized material is applied.

Type "BL" and Mile Post face plate mounting details same as Type "BR"

7'-6" posts shall be painted one coat industrial synthetic primer or galvanized.

4'-6" posts shall be painted one coat industrial synthetic primer and one coat industrial synthetic enamel (Black)

Wood posts shall be Redwood 8"x8", S4S.

Guide post locations shown on plans are approximate and changes may be necessary to meet field conditions.

When placed in rows, guide posts shall be spaced at 200' centers unless other wise called for on plans.

After erection and painting, install a 2"x 6" reflectorized tab, facing traffic, on each Type "A" post.

All guide posts along outside of curves shall have a 2"x 6" reflectorized tab fastened on back of post at top.

Mile posts complete, shall be furnished by the State and installed by the Engineer.

This detail supersedes Drawing No. C-8-1

APPROVED TRAFFIC ENGR.	E Thompson	
DRAWN	J. Snyder	12-20-57
TRACED	J. Snyder	12-20-57
CHECKED		Jan. 1958
APPROVED ENGR. PLANS		

ARIZONA HIGHWAY DEPARTMENT

PLANS DIVISION

GUIDE POSTS
SIGN POSTS
MILE POSTS

DRAWING NO. C-8-2

REV. 1/4/60

Printed 3-26-58 for post & R. Contract

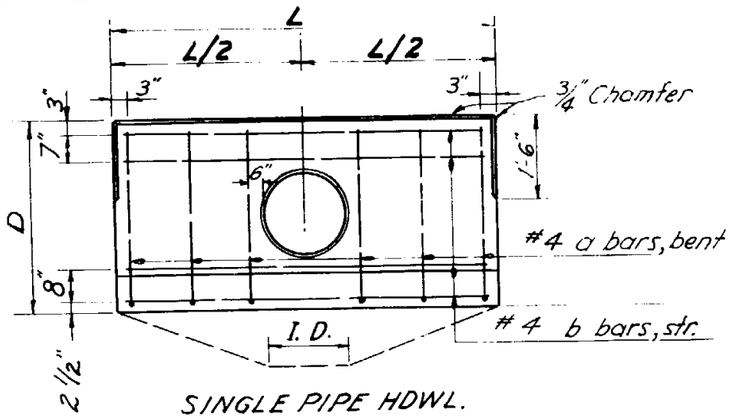

SINGLE PIPE HDWL.

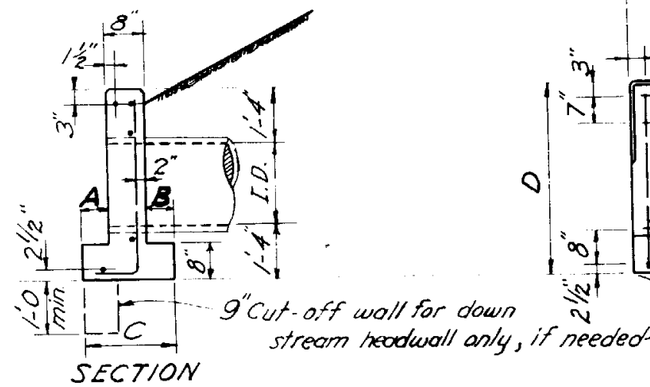

SECTION

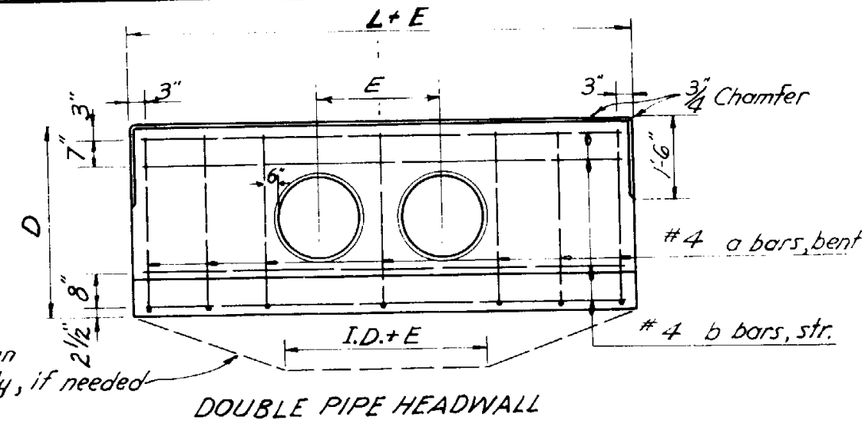

DOUBLE PIPE HEADWALL

STANDARD STRAIGHT HEADWALLS

I.D.	DIMENSIONS A	B	C	D	E	L	L+E	SINGLE PIPE HEADWALL "A" Conc. C.Y. FOR C.M.P.	FOR CONC. PIPE DEDUCT	Steel #4 bars a No.	a Lgth.	b No.	b Lgth.	Reinf. Lbs.	DOUBLE PIPE HEADWALL "A" Conc. C.Y. FOR C.M.P.	FOR CONC. PIPE DEDUCT	Steel #4 bars a No.	a Lgth.	b No.	b Lgth.	Reinf. Lbs.
18"	6"	6"	1'-8"	4'-2"	2'-8"	9'-6"	12'-2"	1.17	0.03	8	4'-8"	5	9'-3"	56	1.47	0.06	9	4'-8"	5	11'-11"	68
24"	8"	8"	2'-0"	4'-8"	3'-6"	11'-6"	15'-0"	1.64	0.04	10	5'-4"	5	11'-3"	73	2.07	0.09	11	5'-4"	5	14'-9"	88
30"	8"	8"	2'-0"	5'-2"	4'-4"	13'-6"	17'-10"	2.05	0.06	10	5'-10"	5	13'-3"	83	2.62	0.13	12	5'-10"	5	17'-7"	105
36"	1'-0"	8"	2'-4"	5'-8"	5'-2"	15'-6"	20'-8"	2.63	0.09	12	6'-8"	5	15'-3"	104	3.40	0.17	14	6'-8"	5	20'-5"	131

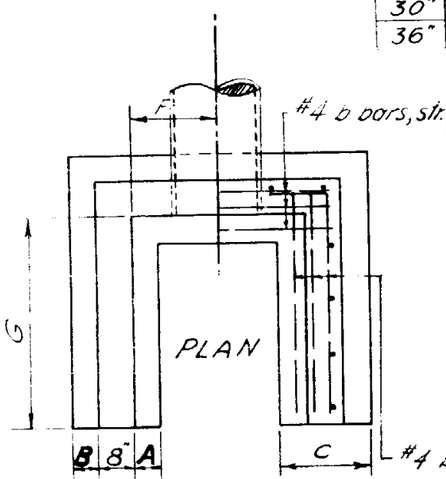

END ELEVATION

I. D.	"U" HEADWALL Steel #4 bars a No.	a L	b No.	b L	b1 No.	b1 L	"A" Conc. C.Y. FOR C.M.P.	FOR CONC. PIPE DEDUCT	Reinf. Lbs.	SINGLE PIPES DIMENSIONS A	B	C	D	F	G	"L" HEADWALL "A" Conc. C.Y. FOR C.M.P.	FOR CONC. PIPE DEDUCT	Reinf. Lbs.	Steel #4 bars a No.	a L	b No.	b L	b1 No.	b1 L
18"	12	4'-8"	5	4'-3"	10	5'-8"	1.68	0.03	90	6"	6"	1'-8"	4'-2"	1'-7"	4'-6"	1.42	0.03	73	10	4'-8"	5	6'-9"	5	5'-8"
24"	14	5'-4"	5	5'-3"	12	6'-8"	2.37	0.04	121	8"	8"	2'-0"	4'-8"	2'-1"	5'-6"	2.00	0.04	97	12	5'-4"	5	8'-3"	6	6'-8"
30"	18	5'-10"	5	6'-3"	12	7'-8"	3.01	0.06	152	8"	8"	2'-0"	5'-2"	2'-7"	6'-6"	2.53	0.06	118	14	5'-10"	5	9'-9"	6	7'-8"
36"	20	6'-8"	5	7'-3"	14	8'-8"	3.90	0.09	184	1'-0"	8"	2'-4"	5'-8"	3'-1"	7'-6"	3.27	0.09	149	16	6'-8"	5	11'-3"	7	8'-8"

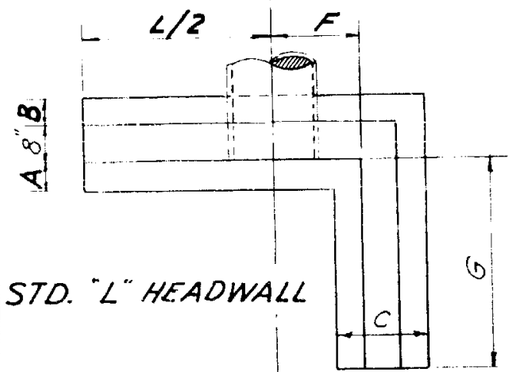

STD. "L" HEADWALL

HALF STR. HDWLL. HALF "U" HDWLL.

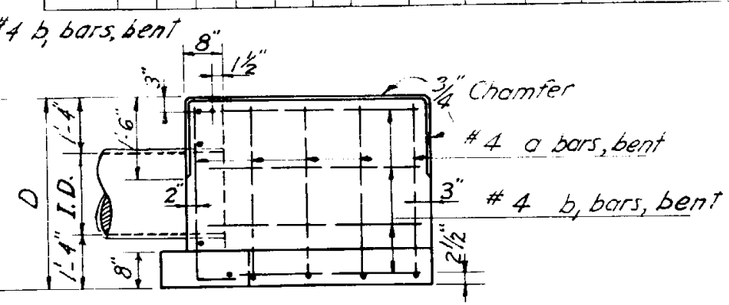

SIDE ELEVATION

STANDARD "U" TYPE HEADWALL

Note:
Std "L" Hdwll. is made up of ½ "U" and ½ Str. Hdwll.

ARIZONA HIGHWAY DEPARTMENT

PLANS DIVISION

STRAIGHT, "L" AND "U" TYPE REINF. CONCRETE HEADWALLS

REV. 3-20-50 12/1/58

DRAWN	GH Nov. 1945	DRAWING NO.
TRACED	GH Nov. 1945	C-9
CHECKED	HHW	
APPROVED PLANS ENGR.	H H Wessel	

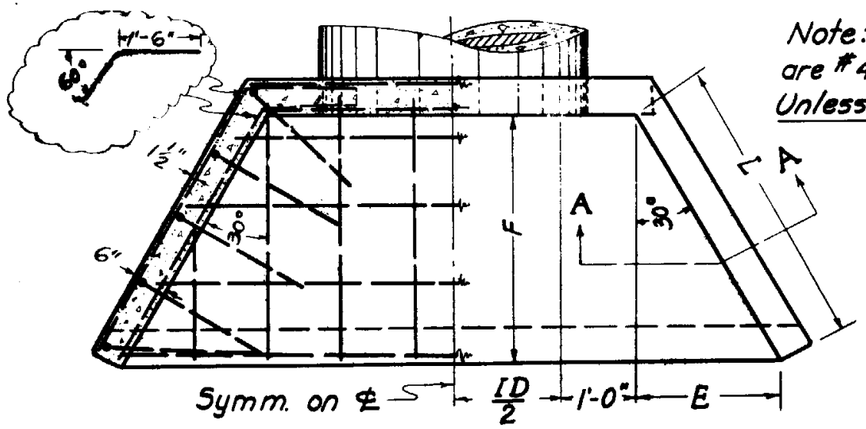

PLAN

Note: All Reinf. Bars are #4 @ Approx. 12" Ctr's. Unless Noted Otherwise.

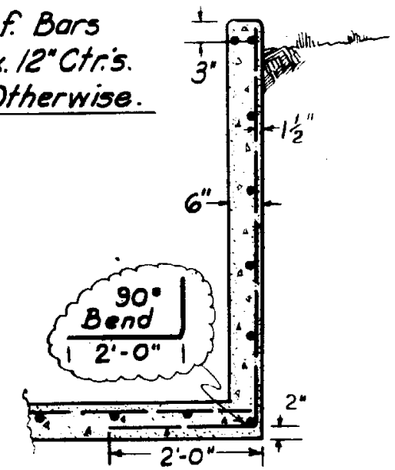

SECTION A-A

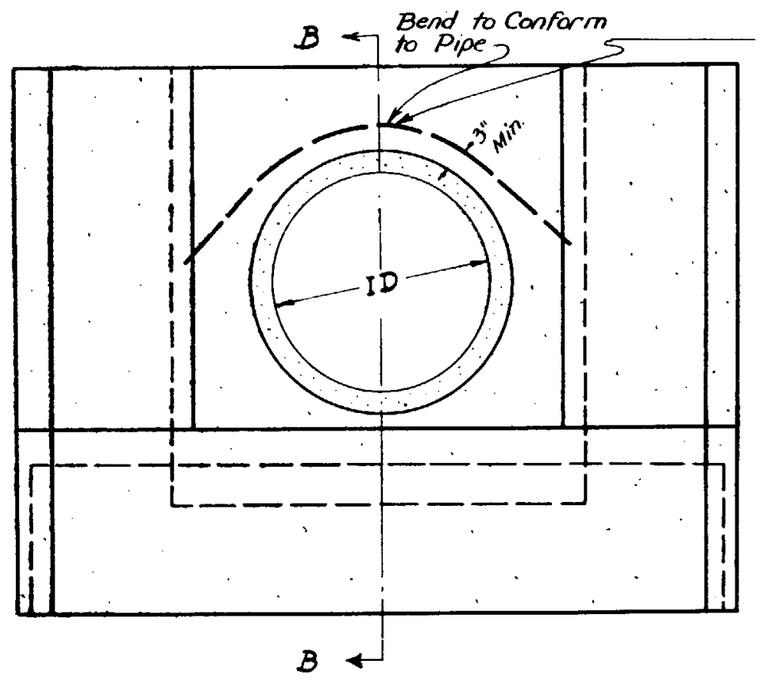

ELEVATION

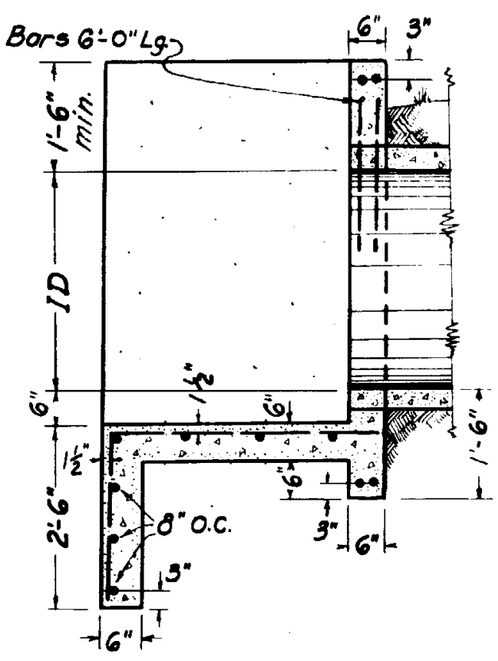

SECTION B-B

QUANTITIES FOR ONE HEADWALL

PIPE	DIMENSIONS			QUANTITIES		
ID	L	E	F	CL. "A" CONC-C.Y. C.M.P.	CL. "A" CONC-C.Y. DEDUCT FOR R.C.P.	REINF. ST.-LB
18"	2'-0"	1'-0"	1'-9"	1.01	0.03	110
24"	2'-0"	1'-0"	1'-9"	1.10	0.04	125
30"	3'-0"	1'-6"	2'-7"	1.50	0.05	155
36"	4'-0"	2'-0"	3'-6"	2.11	0.06	200
42"	5'-0"	2'-6"	4'-4"	2.71	0.08	250
48"	6'-0"	3'-0"	5'-0"	3.37	0.11	300
54"	7'-0"	3'-6"	6'-1"	4.15	0.13	350
60"	8'-0"	4'-0"	6'-11"	4.97	0.16	425

GENERAL NOTES

1. All concrete shall be Class "A"
2. All exposed corners shall have a ¾" chamfer.
3. Concrete pipe joints shall be constructed as per Std. C-33-1.
4. All concrete pipe under roadway shall be R.C.
5. Double riveted bituminous coated C.M.P. may be used for irrigation purposes where called for on plans.

Drawn for 36" Pipe ~ Scale: ½" = 1'-0"

ARIZONA HIGHWAY DEPARTMENT
PLANS DIVISION

IRRIGATION HEADWALLS
18" TO 60" DIAMETER PIPES

DRAWN	R.J.J. 3-10-58	DRAWING No.
TRACED	R.J.J. 3-11-58	C-9-A
CHECKED	L.O.M. 3-20-58	
APPROVED PLANS ENGR.	[illegible]	

REV. 12-1-58 1-4-60

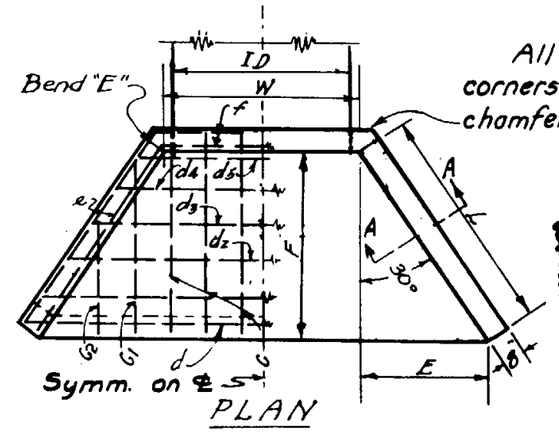

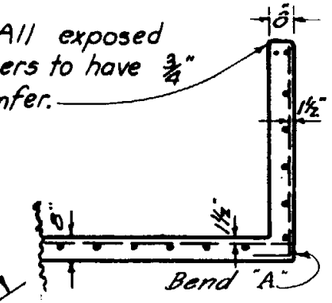

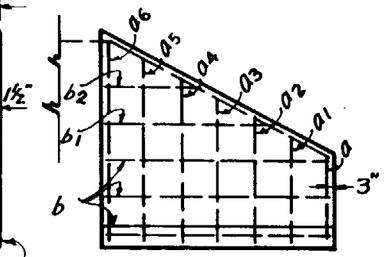

All bars #4 @ 12" centers.

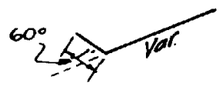

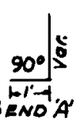

Note: Dimension 'W' to be increased to take care of increased width or length due to skew. Quantities are for one headwall only.

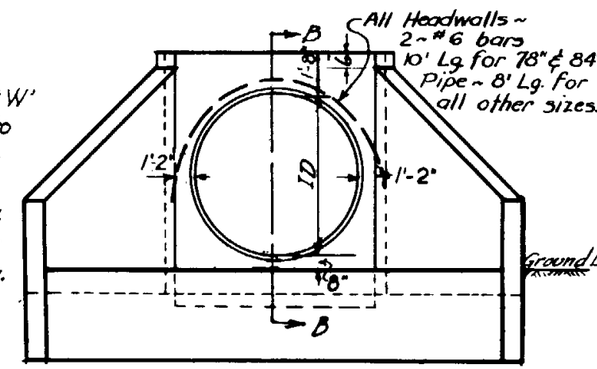

ELEVATION No Scale

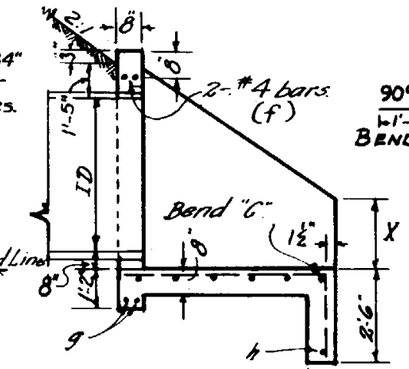

SEC. B-B.

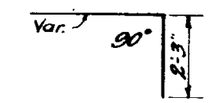

WING TYPE HEADWALL DETAILS

STEEL LIST FOR 1 HEADWALL ~ 66" to 84"			84"		78"		72"		66"	
Mark	Size	Bend	No.	Lgth.	No.	Lgth.	No.	Lgth.	No.	Lgth.
a	#4	A	2	5'-3"	2	6'-0"	2	4'-0"	2	4'-0"
a1	"	"	2	5'-9"	2	5'-6"	2	5'-3"	2	5'-3"
a2	"	"	2	6'-3"	2	6'-0"	2	5'-9"	2	5'-9"
a3	"	"	2	6'-9"	2	6'-6"	2	6'-3"	2	6'-3"
a4	"	"	2	7'-3"	2	7'-0"	2	6'-9"	2	6'-9"
a5	"	"	2	7'-9"	2	7'-6"	2	7'-3"	2	7'-3"
a6	"	"	2	8'-3"	2	8'-0"	2	7'-9"	2	7'-9"
a7	"	"	2	8'-9"	2	8'-6"	2	8'-3"	2	8'-3"
a8	"	"	2	9'-3"	2	8'-9"	2	8'-9"	2	8'-9"
a9	"	"	2	9'-9"	2	9'-3"	2	9'-3"	—	—
a10	"	"	2	10'-3"	—	—	—	—	—	—
b	"	Str.	10	11'-9"	8	11'-3"	8	10'-9"	8	9'-9"
b1	"	"	2	9'-0"	2	8'-9"	2	8'-0"	2	7'-0"
b2	"	"	2	7'-3"	2	7'-0"	2	6'-3"	2	5'-3"
b3	"	"	2	3'-6"	2	3'-0"	2	2'-3"	—	—
b4	"	"	2	2'-0"	2	1'-6"	2	1'-0"	—	—
c	"	C	10	14'-6"	9	13'-0"	9	12'-6"	8	11'-6"
c1	"	"	2	10'-0"	2	9'-6"	2	9'-0"	2	8'-0"
c2	"	"	2	8'-3"	2	7'-9"	2	7'-3"	2	6'-6"
c3	"	"	2	6'-6"	2	6'-0"	2	5'-3"	2	5'-0"
c4	"	"	2	5'-0"	2	4'-9"	2	4'-3"	2	3'-6"
c5	"	"	2	3'-0"	2	2'-9"	2	2'-3"	—	—
d	"	Str.	1	21'-10"	1	20'-10"	1	18'-10"	1	18'-4"
d1	"	"	1	20'-10"	1	19'-10"	1	17'-10"	1	17'-4"
d2	"	"	1	19'-10"	1	18'-10"	1	16'-10"	1	16'-4"
d3	"	"	1	18'-10"	1	17'-10"	1	15'-10"	1	15'-4"
d4	"	"	1	17'-10"	1	16'-10"	1	14'-10"	1	14'-4"
d5	"	"	1	16'-10"	1	15'-10"	1	13'-10"	1	13'-4"
d6	"	"	1	15'-10"	1	14'-10"	1	12'-10"	1	12'-4"
d7	"	"	1	14'-10"	1	13'-10"	1	11'-10"	1	11'-4"
d8	"	"	1	13'-10"	1	12'-10"	1	10'-10"	1	10'-4"
d9	"	"	1	12'-10"	1	11'-10"	1	9'-10"	1	9'-4"
d10	"	"	1	11'-10"	1	10'-10"	1	8'-10"	—	—
e	"	E	4	13'-0"	4	12'-6"	4	12'-0"	4	11'-0"
f	"	Str.	2	9'-4"	2	8'-10"	2	8'-4"	2	7'-10"
g	"	"	2	9'-2"	2	8'-8"	2	8'-2"	2	7'-8"
h	"	"	1	21'-4"	1	20'-4"	1	19'-4"	1	17'-10"
		"								
		"								

STEEL LIST FOR 1 HEADWALL ~ 42" to 60"			60"		54"		48"		42"	
Mark	Size	Bend	No.	Lgth.	No.	Lgth.	No.	Lgth.	No.	Lgth.
a	#4	A	2	4'-6"	2	4'-6"	2	4'-6"	2	4'-0"
a1	"	A	2	5'-0"	2	5'-0"	2	5'-0"	2	4'-6"
a2	"	A	2	5'-6"	2	5'-6"	2	5'-6"	2	5'-0"
a3	"	A	2	6'-0"	2	6'-0"	2	6'-0"	2	5'-6"
a4	"	A	2	6'-6"	2	6'-6"	2	6'-6"	2	6'-0"
a5	"	A	2	7'-0"	2	7'-0"	2	7'-0"	2	6'-6"
a6	"	A	2	7'-6"	2	7'-6"	2	7'-3"	—	—
a7	"	A	2	8'-0"	—	—	—	—	—	—
b	"	Str.	8	8'-9"	8	7'-9"	8	7'-3"	6	6'-9"
b1	"	"	2	6'-0"	2	5'-0"	2	4'-6"	2	4'-0"
b2	"	"	2	4'-3"	2	3'-3"	2	2'-9"	2	2'-0"
b3	"	"	2	1'-6"	—	—	—	—	—	—
c4	"	C	2	2'-0"	—	—	—	—	—	—
c3	"	C	2	3'-9"	2	3'-6"	2	2'-6"	2	2'-3"
c2	"	C	2	5'-6"	2	4'-9"	2	4'-3"	2	3'-3"
c1	"	C	2	7'-3"	2	6'-6"	2	6'-0"	2	6'-0"
c	"	C	8	10'-6"	7	9'-6"	7	8'-6"	6	8'-0"
d	"	Str.	1	16'-10"	1	15'-4"	1	14'-3"	1	13'-4"
d1	"	"	1	15'-10"	1	14'-4"	1	13'-3"	1	12'-4"
d2	"	"	1	14'-10"	1	13'-4"	1	12'-3"	1	11'-4"
d3	"	"	1	13'-10"	1	12'-4"	1	11'-3"	1	10'-4"
d4	"	"	1	12'-10"	1	11'-4"	1	10'-3"	1	9'-4"
d5	"	"	1	11'-10"	1	10'-4"	1	9'-3"	1	8'-4"
d6	"	"	1	10'-10"	1	9'-4"	1	8'-3"	1	7'-4"
d7	"	"	1	9'-10"	1	8'-4"	—	—	—	—
e	"	E	4	10'-0"	4	9'-0"	4	8'-6"	4	8'-0"
f	"	Str.	2	7'-4"	2	6'-10"	2	6'-4"	2	5'-10"
g	"	"	2	7'-2"	2	6'-8"	2	6'-2"	2	5'-8"
h	"	"	1	16'-4"	1	14'-10"	1	13'-10"	1	12'-10"

WING TYPE HEADWALL — SINGLE PIPES									
ID	Dimensions					Water Way	Conc. C.Y.		Steel Lb.
	L	E	F	W	X		R.C.P.	C.M.P.	
42"	7'-0"	3'-6"	6'-1"	5'-10"	2'-6"	9.6'	4.27	4.38	205
48"	7'-6"	3'-9"	6'-6"	6'-4"	3'-0"	12.6'	5.01	5.15	265
54"	8'-0"	4'-0"	6'-11"	6'-10"	3'-0"	15.9'	5.04	5.21	295
60"	9'-0"	4'-6"	7'-10"	7'-4"	3'-0"	19.6'	6.87	7.09	340
66"	10'-0"	5'-0"	8'-8"	7'-10"	3'-3"	23.8'	7.29	7.54	390
72"	11'-0"	5'-6"	9'-6"	8'-4"	3'-3"	28.3	8.29	8.59	480
78"	11'-6"	5'-9"	10'-0"	8'-10"	3'-6"	33.2	9.12	9.47	490
84"	12'-0"	6'-0"	10'-5"	9'-4"	3'-9"	38.5	9.96	10.35	560

ARIZONA HIGHWAY DEPARTMENT

PLANS DIVISION

PIPE HEADWALLS- 42" TO 84"

REV. 66"-84" Added 5-12-47 6-10-55 12/1/58 1/4/60

DRAWN BY	W.M.D.	FEB., 1936
TRACED BY	K.S.	JUNE, 1938
CHECKED BY	H.H.W.	JULY 1938
APPROVED ENGR. OF PLANS	L. I. Wessel	

DRAWING NO. C-10

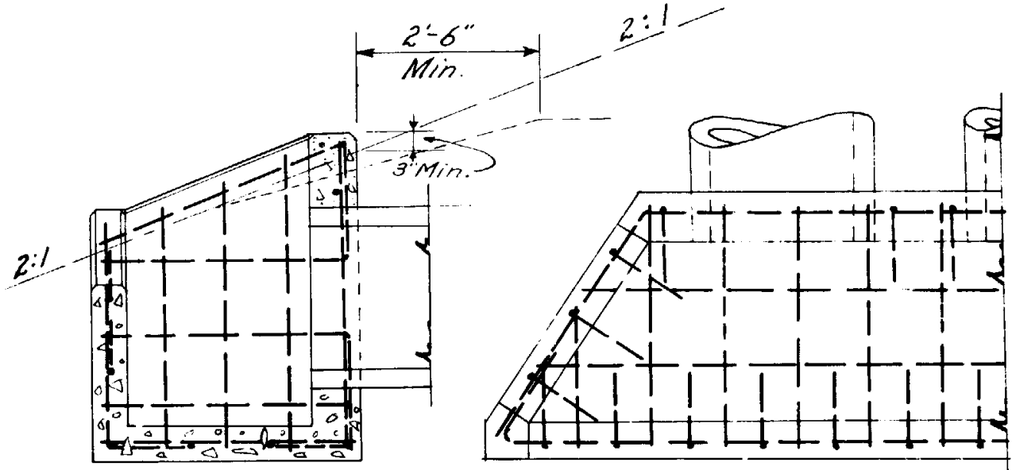

SECTION "Z-Z"

PLAN

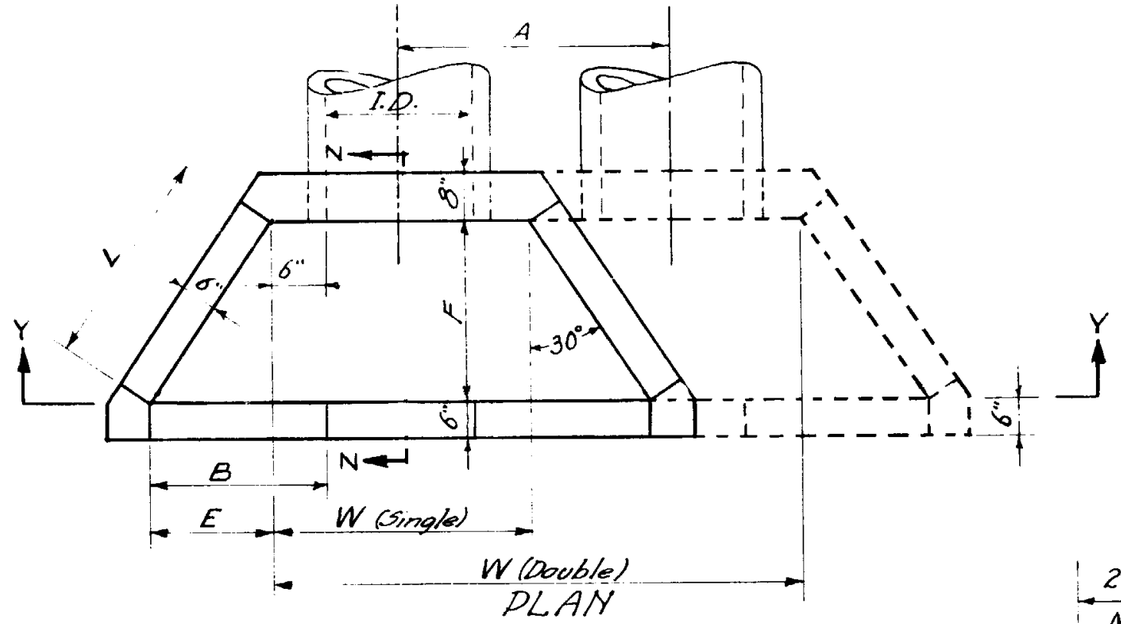

PLAN

Note – All reinforcing to be #4 bars approx. 12" o.c.

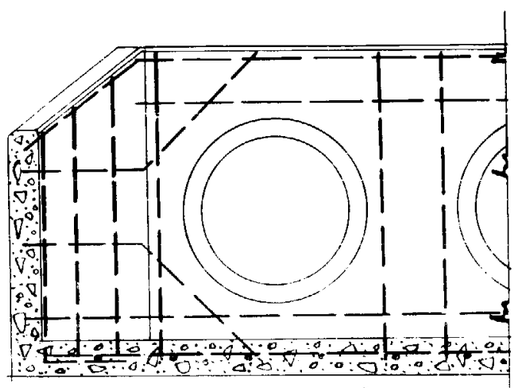

SECTION "Y-Y"

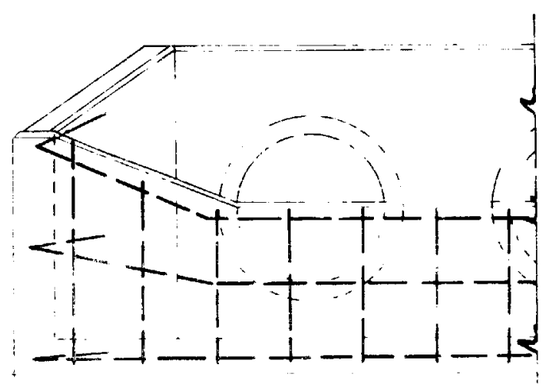

FRONT

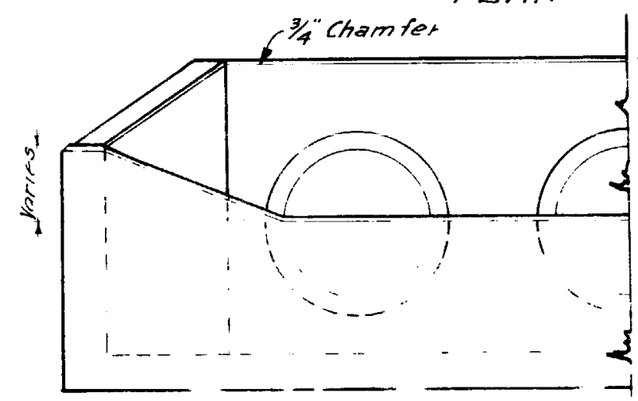

FRONT

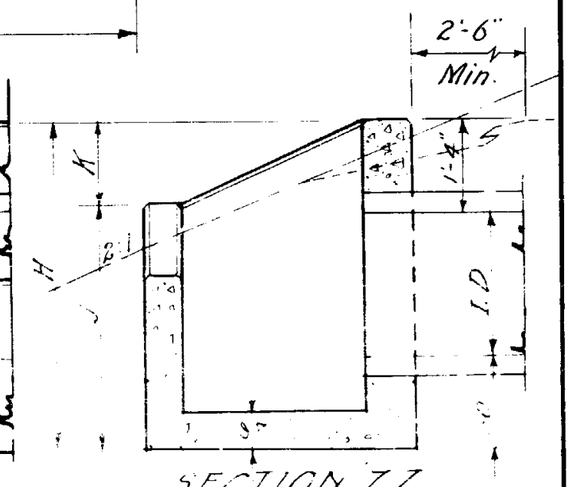

SECTION ZZ

PIPE DIMENSIONS

I.D.	W Single	W Double	A	B	E	F	H	J	K	L
18"	2'-6"	5'-2"	2'-8"	1'-3"	9"	1'-3 5/8"	3'-10"	3'-1"	9"	1'-6"
24"	3'-0"	6'-6"	3'-6"	1'-7 1/2"	1'-1 1/2"	1'-11 3/8"	4'-4"	3'-5"	11"	2'-3"
30"	3'-6"	7'-10"	4'-4"	2'-0"	1'-6"	2'-7 1/4"	4'-10"	3'-9"	1'-1"	3'-0"
36"	4'-0"	9'-2"	5'-2"	2'-4 1/2"	1'-10 1/2"	3'-3"	5'-4"	4'-0"	1'-4"	3'-9"
42"	4'-6"	10'-6"	6'-0"	2'-9"	2'-3"	3'-10 3/4"	5'-10"	4'-4"	1'-6"	4'-6"

QUANTITIES

I.D.	Class "A" Conc. C.Y. Single C.M.P.	Single Fot. Conc. Pipe Deduct	Double C.M.P.	Double Fot. Conc. Pipe Deduct	Reinf. Steel Single	Reinf. Steel Double
18"	0.76	0.03	1.12	0.06	75#	107#
24"	1.00	0.04	1.55	0.09	92#	136#
30"	1.50	0.06	2.29	0.13	112#	166#
36"	1.96	0.09	3.01	0.17	145#	214#
42"	2.49	0.11	3.85	0.23	189#	279#

Reference Std. C-13

ARIZONA HIGHWAY DEPARTMENT

PLANS DIVISION

REV. 12/1/58

DROP INLET HEADWALLS

DRAWN	K.S. Oct. 1939	DRAWING NO.
TRACED	K.S. Oct. 1939	C-11
CHECKED	HHW	
APPROVED PLANS ENG'R.	HH Wessel	

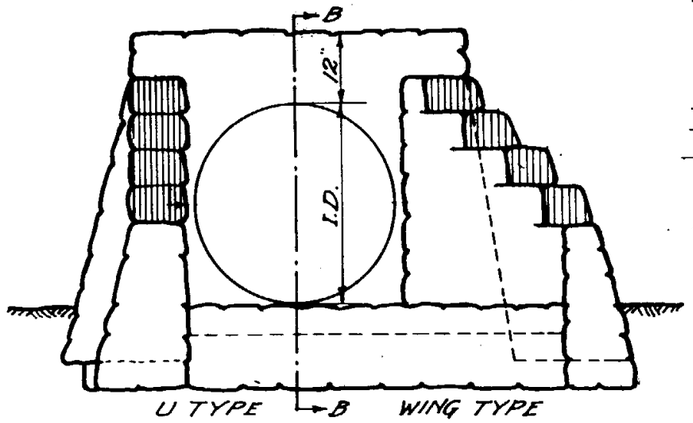

ELEVATION

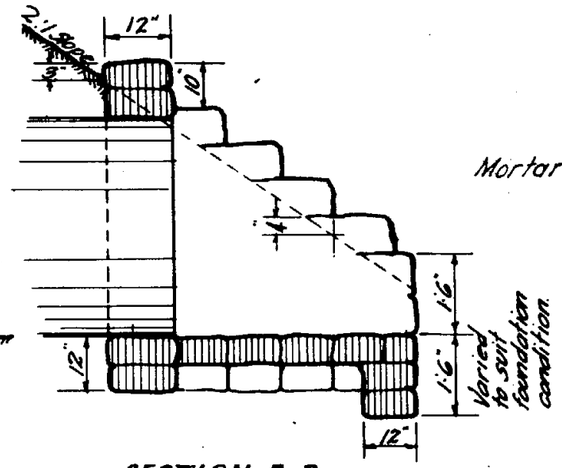

SECTION B-B

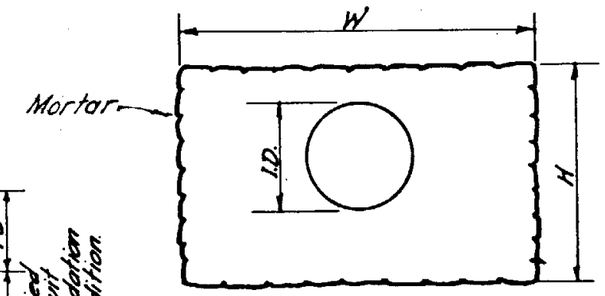

ELEVATION SINGLE

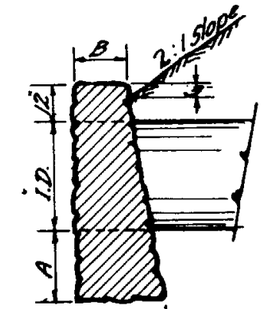

SECTION

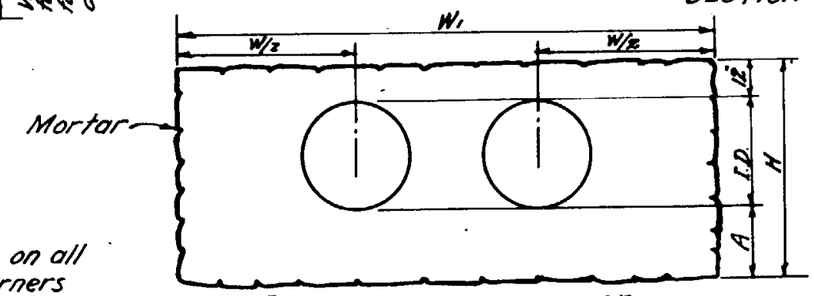

ELEVATION DOUBLE PIPE.

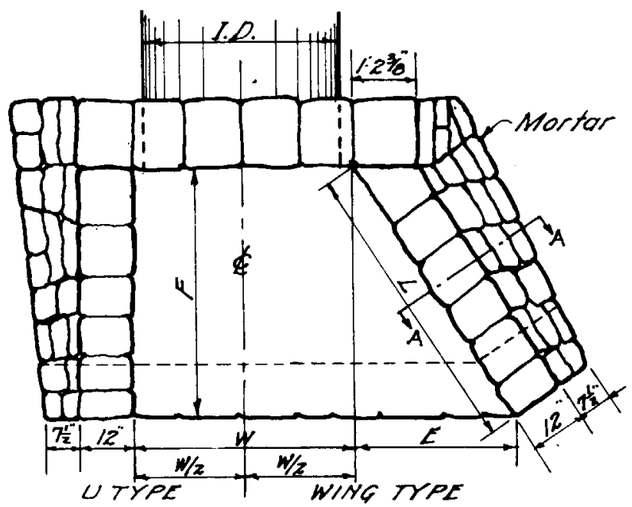

PLAN

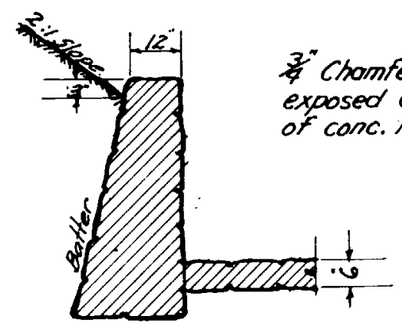

SECTION A-A.

3/4" Chamfer on all exposed corners of conc. headwalls.

STRAIGHT TYPE HEADWALLS

Diam. I.D.	Dimensions A	B	G	H	Single Pipe W	Cu. Yds.	Double Pipe W1	Cu. Yds.
18"	1'-0"	1'-0"	1'-4"	3'-11"	7'-0"	1.41	9'-8"	1.49
24"	1'-4"	1'-0"	1'-8"	4'-10"	8'-0"	1.75	11'-6"	2.43
30"	1'-8"	1'-0"	2'-0"	5'-9"	10'-6"	3.08	14'-7"	4.11
36"	2'-0"	1'-0"	2'-4"	6'-8"	13'-0"	5.05	17'-8"	6.58

Note— Quantities are for one headwall only.

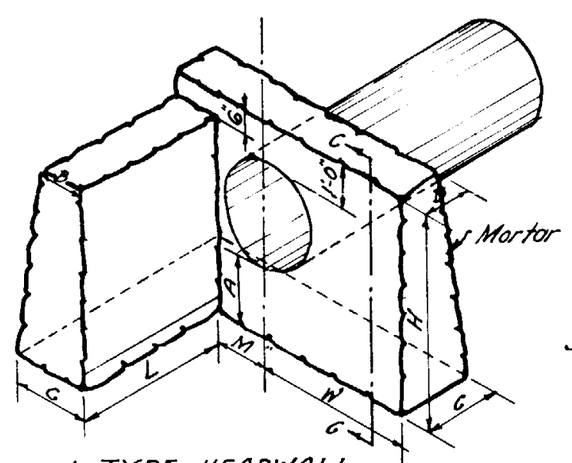

L TYPE HEADWALL

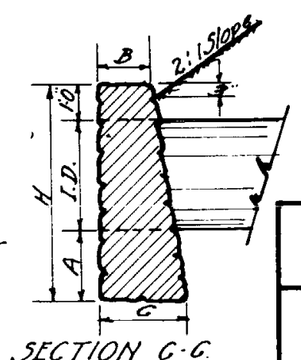

SECTION G-G.

L TYPE HEADWALLS

Diam. I.D.	Dimensions A	B	G	H	W	L	Cu. Yds.	M
18"	1'-0"	1'-0"	1'-4"	3'-11"	3'-6"	4'-6"	1.60	1'-3"
24"	1'-4"	1'-0"	1'-8"	4'-10"	4'-0"	5'-6"	2.66	1'-7"
30"	1'-8"	1'-0"	2'-0"	5'-9"	5'-3"	6'-6"	4.36	1'-10"
36"	2'-0"	1'-0"	2'-4"	6'-8"	6'-6"	7'-6"	6.69	2'-2"

WING AND U TYPE HEADWALLS

Dimensions				Single Pipe				Double Pipe			
Diam. I.D.	Wing Type L	Wing Type E	F	W	Waterway Area S.F.	U Type Cu. Yds.	Wing Type Cu. Yds.	W	Waterway Area S.F.	U Type Cu. Yds.	Wing Type Cu. Yds.
30"	2'-8 1/2"	1'-6"	2'-3"	3'-7"	4.91	2.52	2.57	7'-8"	9.82	3.43	3.48
36"	3'-7 1/2"	2'-0"	3'-0"	4'-2"	7.07	3.36	3.56	8'-10"	14.14	4.51	4.71
42"	4'-6"	2'-6"	3'-9"	4'-9"	9.62	4.31	4.71	10'-0"	19.24	5.73	6.13
48"	5'-5"	3'-0"	4'-6"	5'-4"	12.56	5.40	6.03	11'-2"	25.12	7.17	7.74
54"	6'-3 1/2"	3'-6"	5'-3"	5'-11"	15.90	6.66	7.53	12'-4"	31.80	8.70	9.57
60"	7'-2 1/2"	4'-0"	6'-0"	6'-6"	19.63	8.05	9.21	13'-6"	39.26	10.44	11.59

Note— Dimensions and quantities shown are calculated on a basis of using concrete pipe.

Dimension W to be increased to take care of increased width or length due to skew.

ARIZONA HIGHWAY DEPARTMENT

PLANS DIVISION

HEADWALLS PLAIN CONCRETE OR CEM. RUBBLE MASONRY

DRAWN BY	B.P.R. DRAWING 1936	DRAWING NO.
TRACED BY	K.S. JUNE, 1938	C-12
CHECKED BY	H.K.W. JULY, 1938	
APPROVED ENGR. OF PLANS	H.H. Wessel	

REV.
Nov. 1945
12/1/58
1/4/60

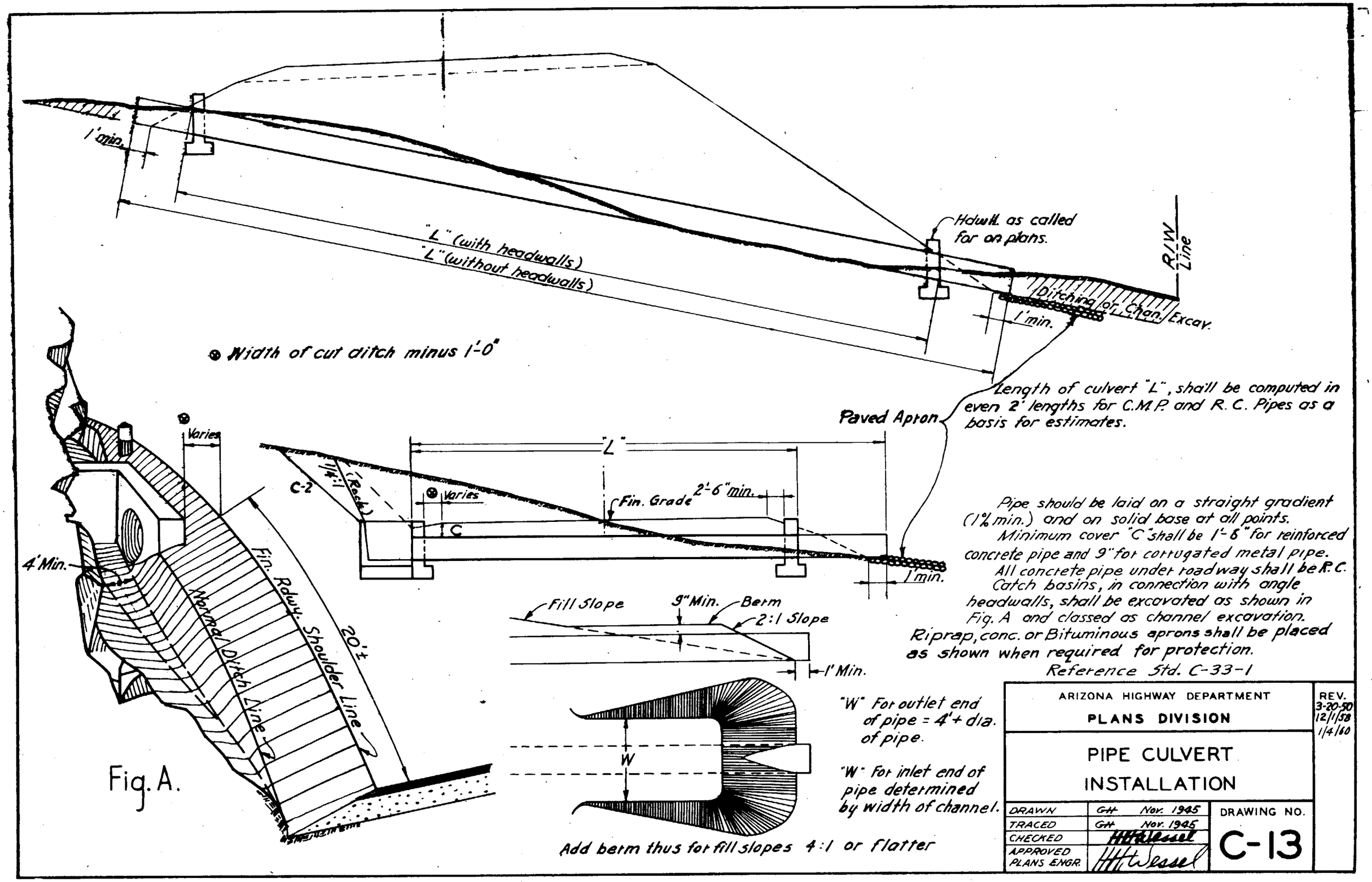

1' min.
"L" (with headwalls)
"L" (without headwalls)
Hdwll. as called for on plans.
R/W Line
Ditching or Chan. Excav.
1' min.
⊗ Width of cut ditch minus 1'-0"
Length of culvert "L", shall be computed in even 2' lengths for C.M.P. and R.C. Pipes as a basis for estimates.
Paved Apron
"L"
C-2
1/4:1 (Rock)
⊗ Varies
Fin. Grade
2'-6" min.
C
1' min.
Varies
4' Min.
Fin. Rdwy. Shoulder Line
Normal Ditch Line
20'±
Fill Slope
9" Min.
Berm
2:1 Slope
1' Min.
W
Fig. A.
Pipe should be laid on a straight gradient (1% min.) and on solid base at all points.
Minimum cover "C" shall be 1'-6" for reinforced concrete pipe and 9" for corrugated metal pipe.
All concrete pipe under roadway shall be R.C.
Catch basins, in connection with angle headwalls, shall be excavated as shown in Fig. A and classed as channel excavation.
Riprap, conc. or Bituminous aprons shall be placed as shown when required for protection.
Reference Std. C-33-1
"W" For outlet end of pipe = 4' + dia. of pipe.
"W" For inlet end of pipe determined by width of channel.
Add berm thus for fill slopes 4:1 or flatter
ARIZONA HIGHWAY DEPARTMENT
PLANS DIVISION
REV. 3-20-50 12/1/58 1/4/60
PIPE CULVERT INSTALLATION
DRAWN GH Nov. 1945
TRACED GH Nov. 1945
CHECKED HHWessel
APPROVED PLANS ENGR. HHWessel
DRAWING NO.
C-13

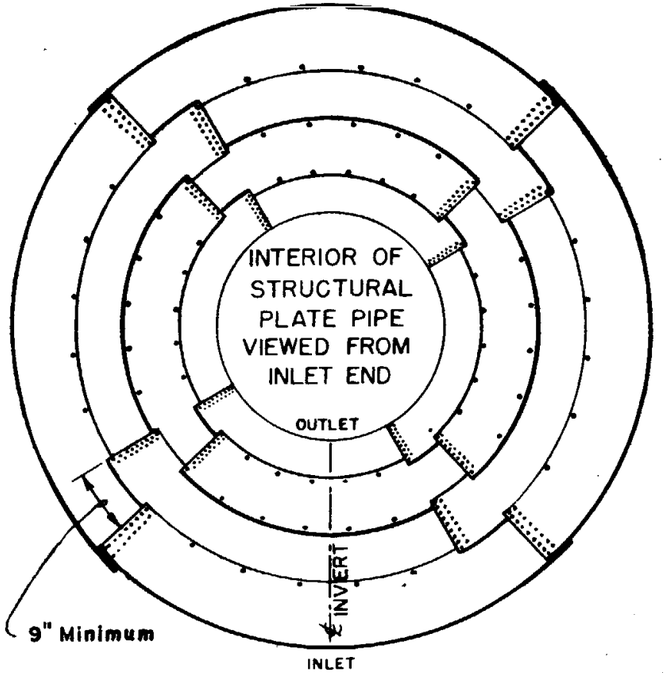

PLATES SHALL BE STAGGERED AS SHOWN ABOVE.
BOLT HEADS ON OUTSIDE OF PIPE AND NUTS INSIDE

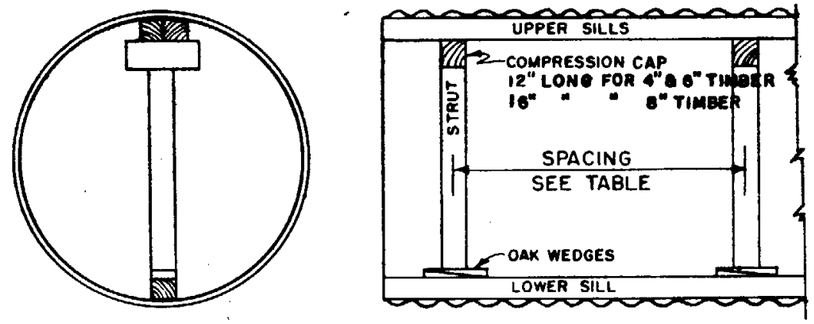

METHOD OF PLACING STRUTS

COMPRESSION CAPS AND SILLS TO BE SAME DIMENSION TIMBER AS STRUTS AND PLACED WITH LEAST DIMENSION VERTICAL.

COMPRESSION CAPS TO BE OF SOFT WOOD TO ALLOW COMPRESSION.

LENGTH OF STRUTS = (PIPE DIA. × 1.05 FOR C.M.P. / 1.03 FOR ℞ PIPE) — 3× LEAST DIM. OF STRUT AND — WEDGES.

STRUT SPACING COMPUTED FOR FULL DIMENSION (NOT NOMINAL) SOUND STRUCTURAL TIMBER.

STRUTS SHALL BE LEFT IN PLACE UNTIL FILL IS CONSOLIDATED.

C.M.P. ARCHES SHALL NOT BE STRUTTED.

STRUTS WILL NOT BE REQUIRED FOR 48" C.M.P. UNDER FILLS OF 15' OR LESS EXCEPT WHEN NOTED ON PLANS.

BOTTOM PLATES OF STRUCTURAL PLATE PIPE SHALL BE NO. 1 GAUGE.

ENDS OF C.M.P., STRUCTURAL PLATE PIPE AND PIPE ARCHES SHALL NOT BE BEVELED.

SPACING IN FEET OF TIMBER STRUTS FOR CMP & STRUCTURAL PLATE PIPE

PIPE DIA.	STRUT SIZE INCHES	HEIGHT OF COVER IN FEET										
		5	10	15	20	30	40	50	60	70	80	100
48"	4 × 4				6.0	5.0	3.5					
	4 × 6					6.0	5.0	4.0	3.5	3.0		
	6 × 6							6.0	5.0	4.5	4.0	3.5
	6 × 8										6.0	5.0
60"	4 × 4	6.0	6.0	6.0	6.0	4.5	3.5	3.0				
	4 × 6					6.0	5.0	4.0	3.5			
	6 × 6								5.5	4.5	4.0	3.0
	6 × 8									6.0	5.0	4.0
72"	4 × 4	6.0	6.0	6.0	5.5	3.5						
	4 × 6				6.0	5.5	4.0	3.5				
	6 × 6						6.0	5.0	4.0	3.5		
	6 × 8								5.5	5.0	4.0	3.5
	8 × 8										5.5	4.5
84"	4 × 4	6.0	6.0	5.5	4.5	3.0						
	4 × 6				6.0	4.5	3.5					
	6 × 6						5.0	4.0	3.5			
	6 × 8							5.5	4.5	4.0	3.5	
	8 × 8									5.5	5.0	4.0
96"	4 × 4	6.0	6.0	4.5	3.5							
	4 × 6			6.0	5.5	4.0						
	6 × 6					6.0	4.5	3.5				
	6 × 8						6.0	5.0	4.5	3.5	3.0	
	8 × 8								5.5	5.0	4.5	3.5
108"	4 × 4	6.0	4.5	3.5								
	4 × 6		6.0	5.5	4.5	3.0						
	6 × 6				6.0	5.0	4.0	3.0				
	6 × 8						5.5	4.5	4.0	3.0		
	8 × 8								5.0	4.5	4.0	3.0
120"	4 × 4	6.0	4.0									
	4 × 6		5.5	4.5								
	6 × 6			6.0	6.0	4.5	3.5					
	6 × 8					6.0	4.5	4.0	3.0			
	8 × 8							5.5	4.5	4.0	3.5	
132"	4 × 4	4.5	3.5									
	4 × 6		5.0	4.0	3.5							
	6 × 6			6.0	5.0	4.0	3.0					
	6 × 8					5.5	4.0	3.5	3.0			
	8 × 8							4.5	4.0	3.5	3.0	
144"	4 × 4	3.5										
	4 × 6	6.0	4.5	3.5								
	6 × 6		6.0	5.5	4.5	3.5						
	6 × 8				6.0	5.0	4.0	3.0				
	8 × 8						5.0	4.5	3.5	3.0		
156"	4 × 4	3.0										
	4 × 6	5.0	4.0	3.0								
	6 × 6		6.0	5.0	4.0							
	6 × 8				5.5	4.5	3.5					
	8 × 8					6.0	4.5	4.0	3.5	3.0		
168"	4 × 6	4.5	3.5									
	6 × 6	6.0	5.5	4.5	3.5							
	6 × 8			6.0	5.0	4.0	3.0					
	8 × 8					5.0	4.5	3.5	3.0			
180"	4 × 6	4.0										
	6 × 6	6.0	5.0	4.0								
	6 × 8		6.0	5.5	4.5	3.5	3.0					
	8 × 8				6.0	5.0	4.0	3.0				

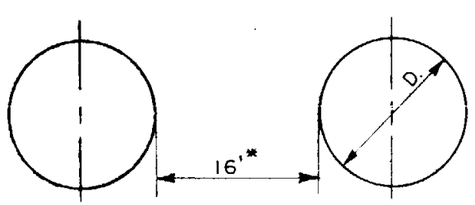

* 4' MINIMUM SPACE BETWEEN PIPES MAY BE USED ONLY IN SPECIAL CASES WHEN SHOWN ON PLANS.

STRUCTURAL ℞

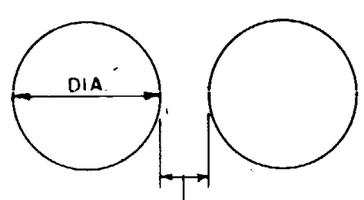

DIAMETER	+MINIMUM SPACE BETWEEN PIPES
12" TO 24"	1'-0"
30" TO 66"	ONE-HALF DIAMETER OF PIPE
72" TO 84"	3'-0"

+WHEN HEADWALLS ARE USED SPACE AS PER HEADWALL STANDARD.

C.M.P.

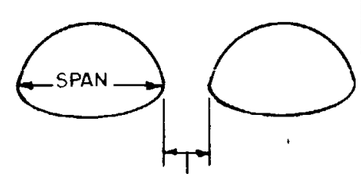

SPAN	MINIMUM SPACE BETWEEN PIPE ARCHES
18" TO 36"	1'-0"
43" TO 72"	ONE-THIRD SPAN OF PIPE ARCH

C.M.P. ARCHES

SPACING FOR MULTIPLE INSTALLATIONS

ARIZONA HIGHWAY DEPARTMENT
PLANS DIVISION

CORRUGATED METAL AND STRUCTURAL PLATE PIPE INSTALLATION

DRAWN	L.O. MOE 10-20-59	DRAWING NO.
TRACED	L.O. MOE 10-20-59	C-13-A
CHECKED	S.M.H. 10-21-59	
APPROVED ENGR. PLANS	H. Heidecke	

REV.

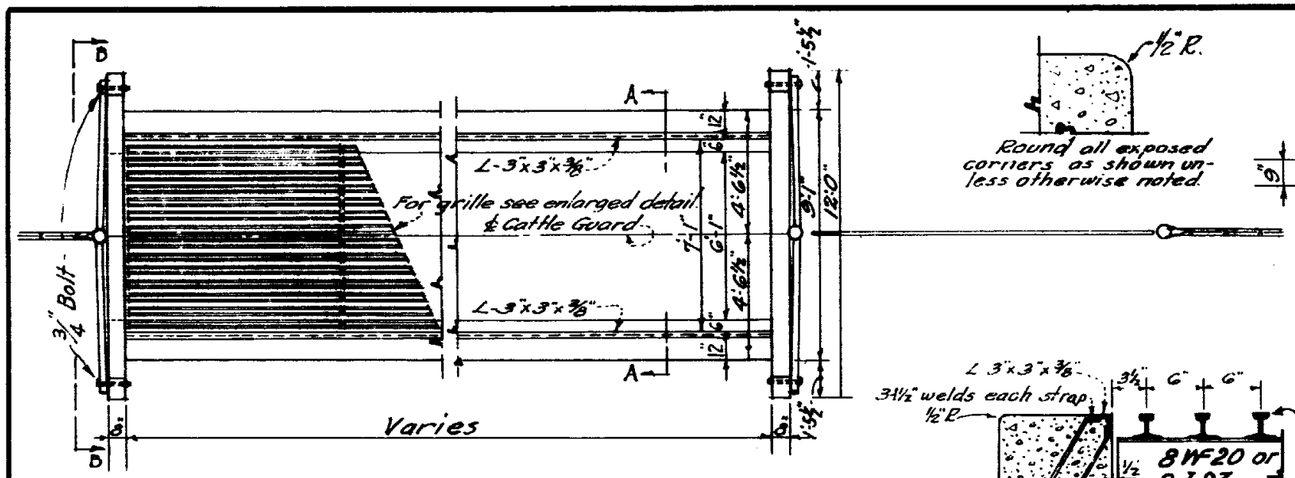

GENERAL PLAN.

Paint Note:-
Shop Coat - All rails, structural steel, steel post and braces to be painted 1 coat paint No. 1

Round all exposed corners as shown unless otherwise noted.

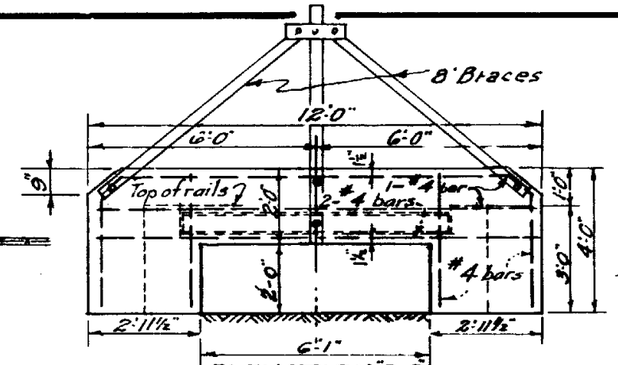

ELEVATION B-B

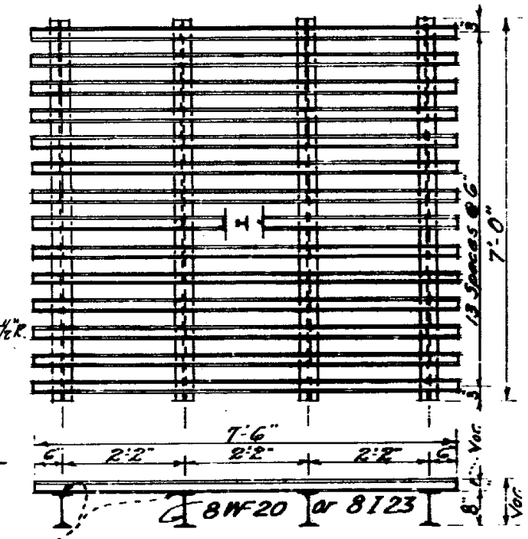

DETAIL OF WELDED GRILLE UNIT

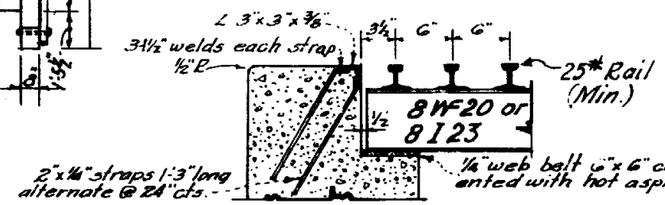

PART SECTION A-A.
Rail Treads.

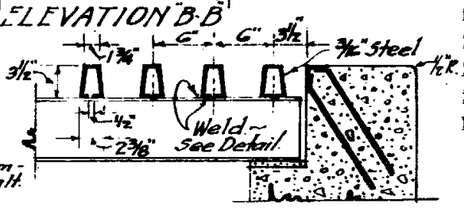

PART SECTION A-A.
U Type Treads.

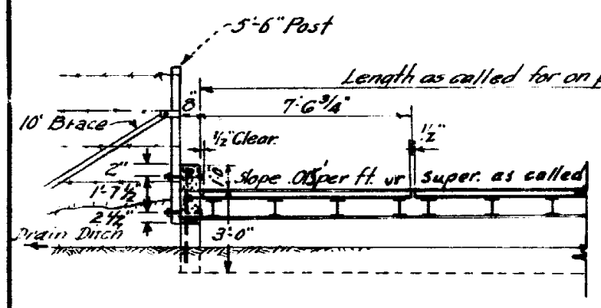

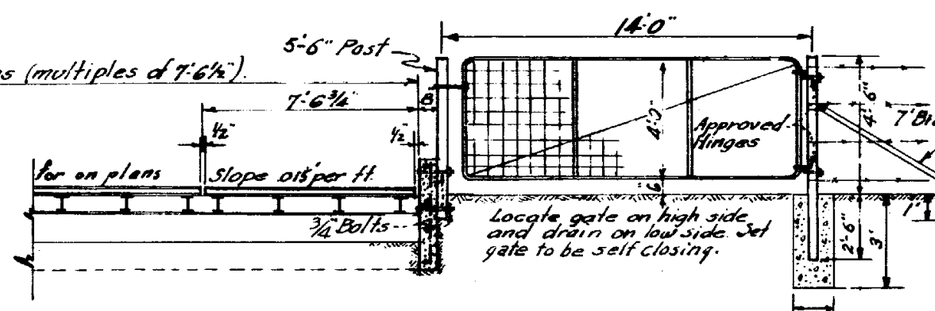

SECTION ON CENTER LINE FOR ANY WIDTH ROADWAY.

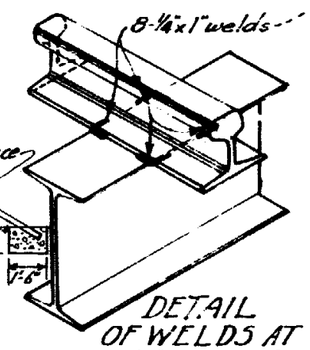

DETAIL OF WELDS AT EACH INTERSECTION
Typical for Rail or U Treads.

MATERIAL LIST					
Item	Pcs.	Size	Length	Steel #	Conc. C.Y.
Common to all guard lengths.					
Post, Steel	3	See Dwg.		C-16	
Braces, Steel	6	"	"	C-16	
Conc. for setting Post & Braces					0.36
Reinf. Bars	8	#4	11'-6"	60.70	
" "	3	"	3'-6"	18.48	
Gate	1	4'-0"	x 14'-0"	Complete	
6 Unit - 40' Roadway					
Concrete	Class "A"				14.9
Fabricated L	2	3"x3"x3/8"x45'-4"			
Web Belting	48	6"x6"x1/4"			
5 Unit - 34' Roadway					
Concrete	Class "A"				12.71
Fabricated L	2	3"x3"x3/8"x37'-9"			
Web belting	40	6"x6"x1/4"			
4 Unit - 26' & 28' Roadway					
Concrete	Class "A"				10.53
Fabricated L	2	3"x3"x3/8"x30'-2 1/2"			
Web belting	32	6"x6"x1/4"			
2 Unit - SIDEROAD					
Concrete	Class "A"				5.23
Fabricated L	2	3"x3"-3/8"x15'-1"			
Web belting	16	6"x6"x1/4"			

NOTE: Second hand rails may be used providing they are clean, free from rust scales, of uniform cross section and weighing at least 95% of original nominal weight, 25 lbs. Min.

Note:
Fence posts, braces and Type #1 Gate as per Std. C-16

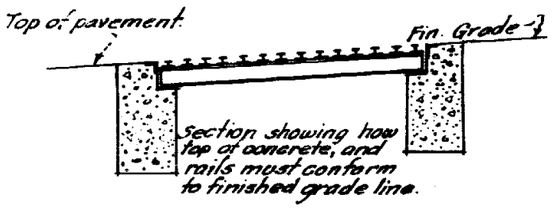

Section showing how top of concrete, and rails must conform to finished grade line.

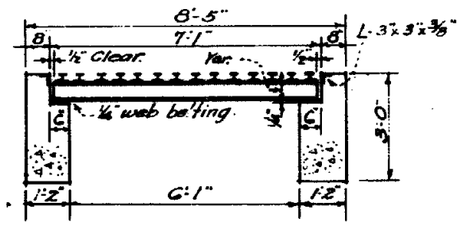

FOR SIDEROAD ONLY.

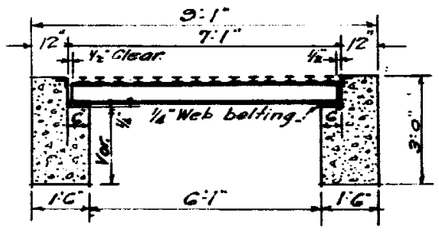

FOR ROADWAYS OF 24' OR MORE
SECTION A-A.

ARIZONA HIGHWAY DEPARTMENT
PLANS DIVISION

CATTLE GUARDS

DRAWN	W.M.D. MAY, 1936	DRAWING NO.
TRACED	K.S. JUNE, 1938	C-14
CHECKED	HHW July 4 1938	
APPROVED ENGR. PLANS	[illegible]	

REV.
Weld 3/15/44
I-Beam 6/3/47
3-20-50
U Treads Rollers I Beams 3/16/52
12, 1, 58

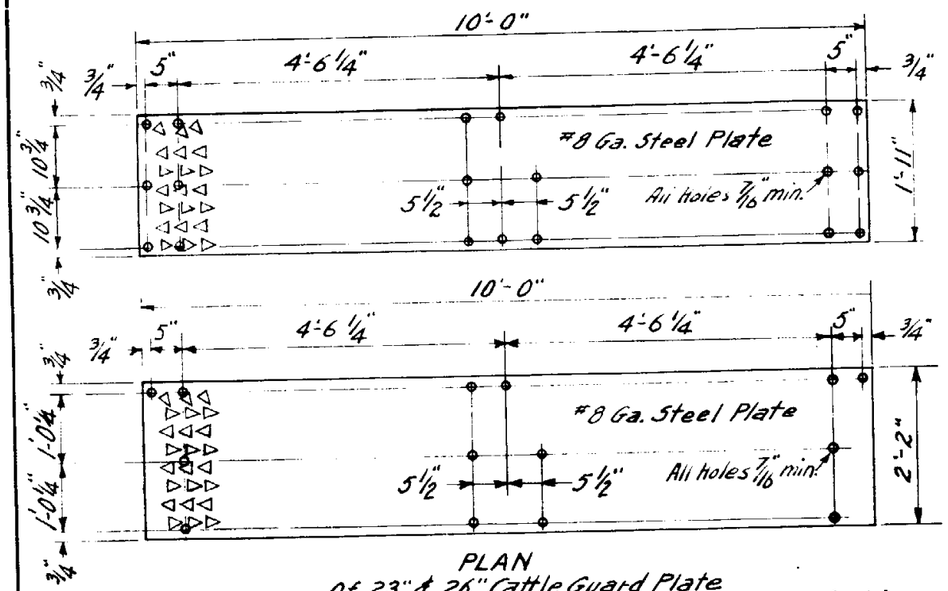

PLAN
Of 23" & 26" Cattle Guard Plate
Manufactured By Sheffield Car Co., Three Rivers, Michigan.

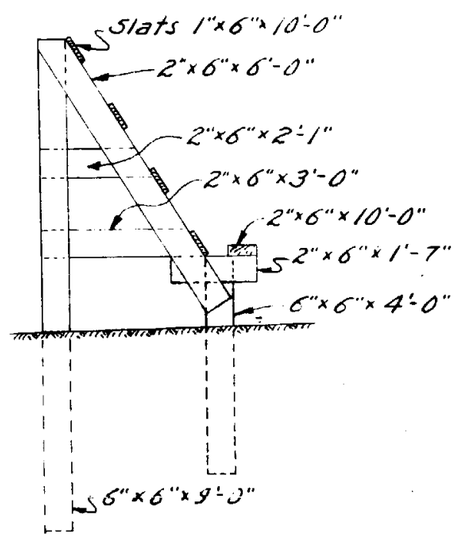

Timber Sizes For End Frames

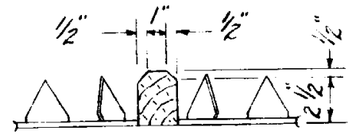

Detail Of 2"x3" Timber Between Adjacent Plates. Fasten Down With 3-3/8"x7" Lag Screws Each Piece.

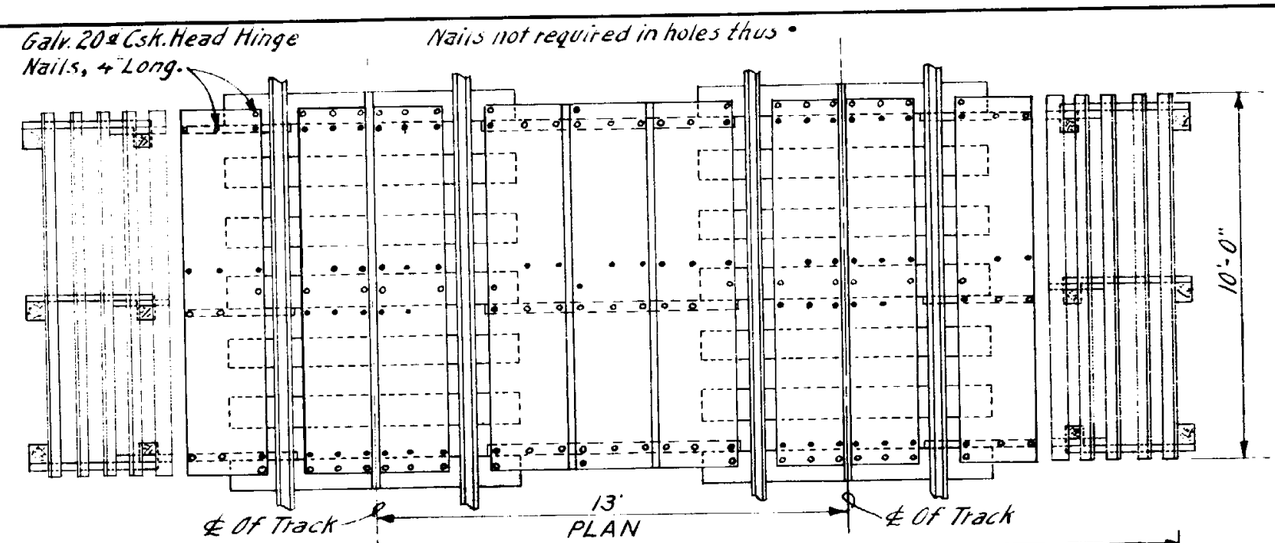

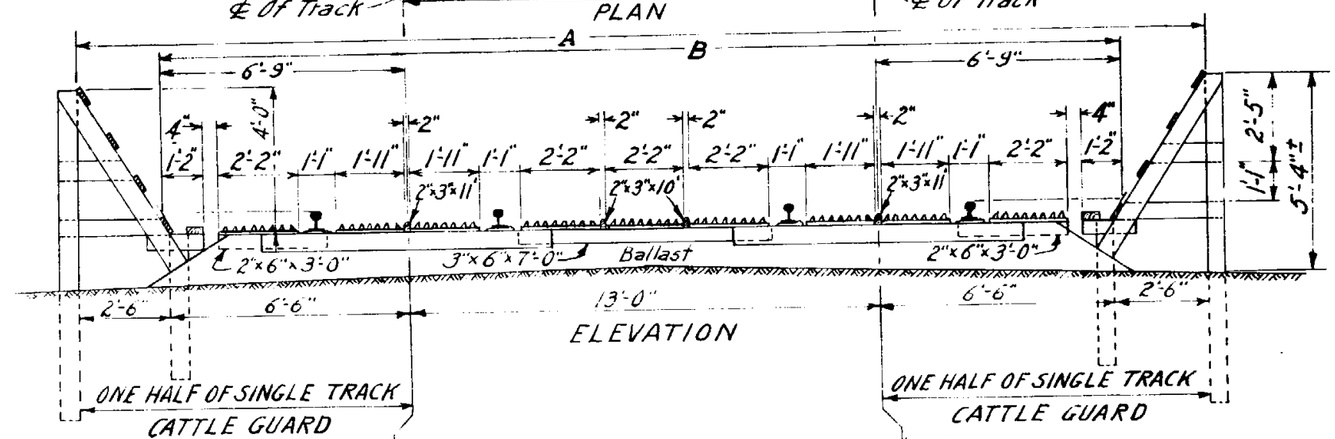

ELEVATION

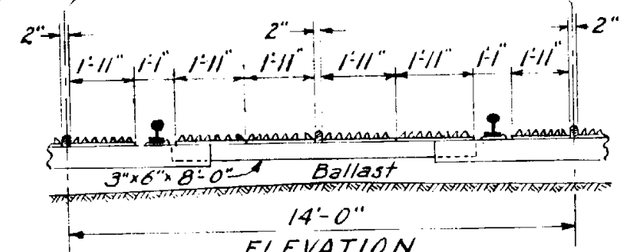

ELEVATION

Note:
The 6"x6" posts and the 2"x6" & 3"x6" timbers that are fastened to the ties shall be pressure treated in accordance with Standard Specifications and unpainted. The remaining timber shall be given one coat of #7 and one coat of #8 paint.
The metal plates shall be furnished with the manufacturers shop coat of paint or shall be given one coat of #1 paint.

DIMENSIONS	A	B
Single Track	18'-0"	13'-6"
13' Track Centers	31'-0"	26'-6"
14' Track Centers	32'-0"	27'-6"

ARIZONA HIGHWAY DEPARTMENT
PLANS DIVISION

REV. 12/1/58

RAILROAD CATTLE GUARD

DRAWN	L.O. Moe 11-12-57	DRAWING NO.
TRACED	L.O. Moe 11-12-57	C-14-R
CHECKED	J.P.B. 1-28-58	
APPROVED ENGR. PLANS	L. Heidecker	

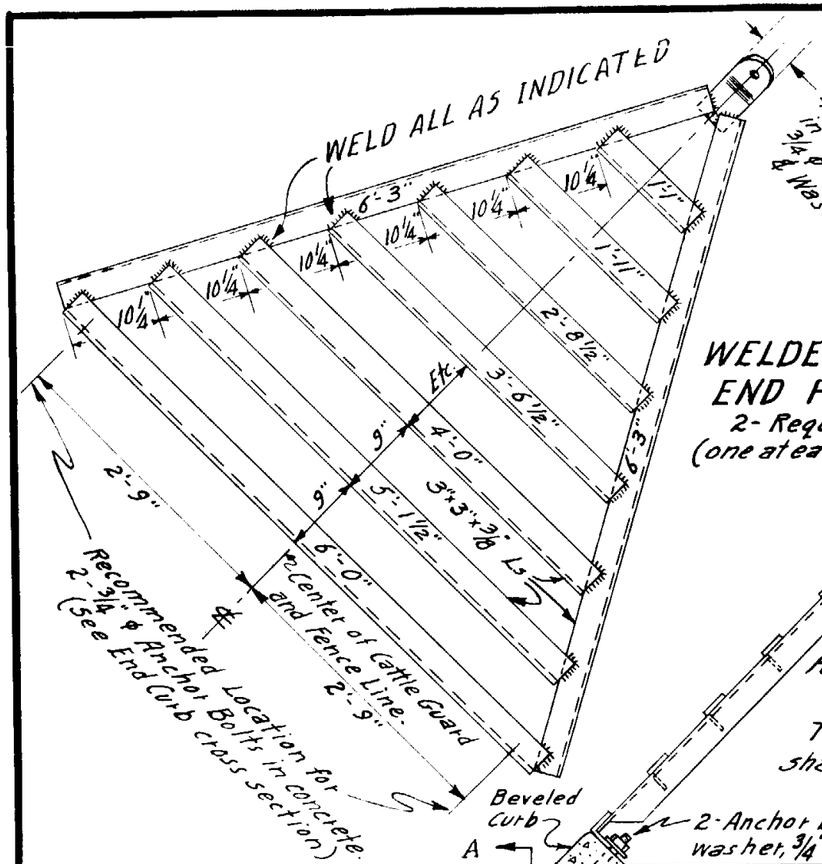

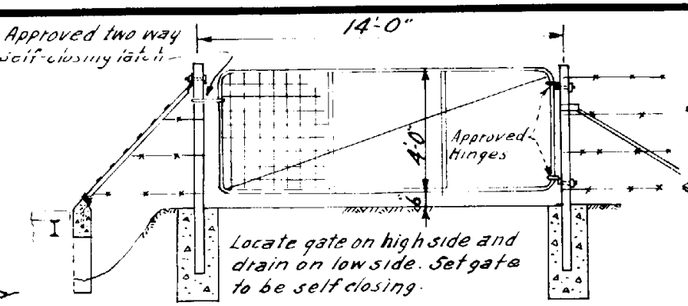

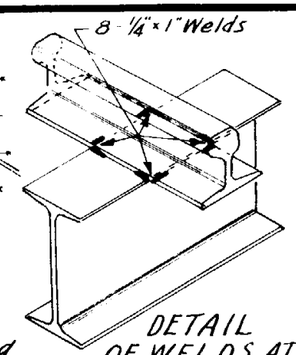

DETAIL OF WELDS AT EACH INTERSECTION
Typical for Rail or U Treads.

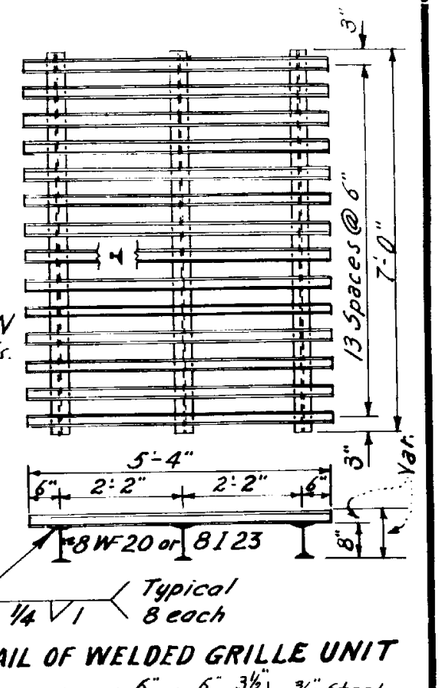

DETAIL OF WELDED GRILLE UNIT

Note:
Fence posts, braces and Type #1 Gate as per Std. G16

WELDED ANGLE END FRAME
2- Required
(one at each end)

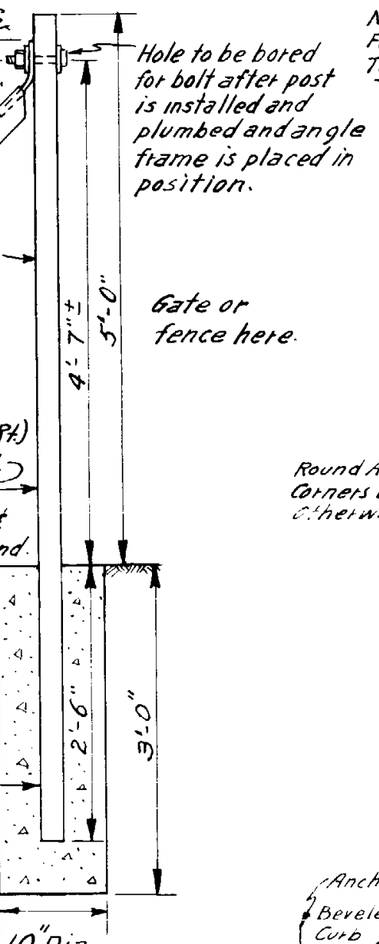

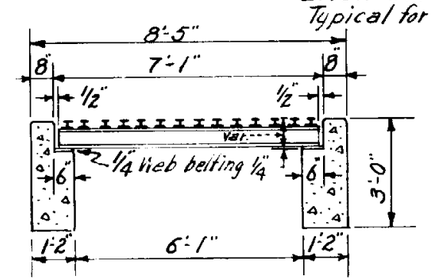

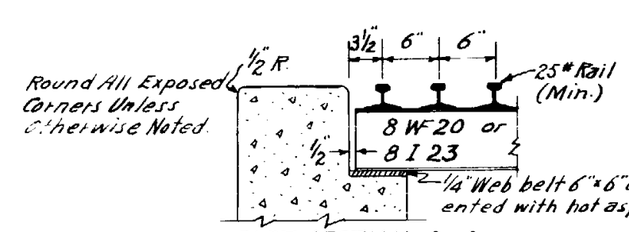

PART SECTION A-A
Rail Treads

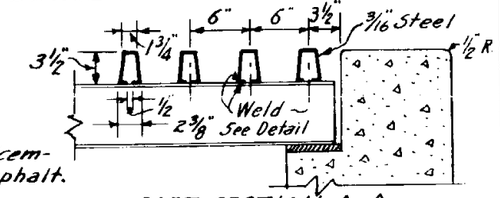

PART SECTION A-A
U Type Treads

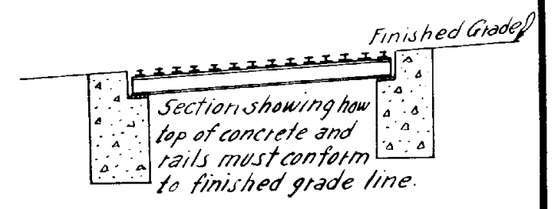

Paint Note:
Shop Coat - All rails, end frames, structural steel and steel posts to be painted one coat Paint No. 1.

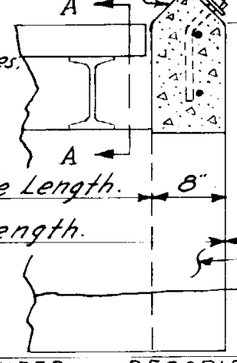

END CURB CROSS SECTION

3'-10½"

Opening for drain out one end, other end closed.

MATERIAL LIST

ITEM	REQUIRED	DESCRIPTION
Posts, For Fence or Gate —	3	— 2½" Dia. Pipe or 2½"x2½"x¼" L except as noted
Bolts, With Nut & Washers —	2	— ¾"φ x 5" Straight
" " " " " —	4	— ¾"φ x 14", 45° Bend Mid Point (Anchor Bolts)
Gate, With Hinges & Latch —	1	— Type 1 Gate For 14' Opening, See Detail
Reinforcing Bars ———	4	— #4 Bars x 8'-2" Straight, Aggregate Weight, 22 Lbs.
" " ———	8	— #4 Bars x 2'-10" " " " 15 Lbs.
" " ———	6	— #4 Bars x 11'-9" " " " 47 Lbs.
Std. Welded Grille Unit —	2	— See Details (Upper Right) Approximate Weight 2200 Lbs.
Welded Angle End Frame —	2	— " " (Directly Above) " " 560 Lbs.
Web Belting, Grille Shims —	12	— 6"x6"x¼" See Details (Center Right)
Concrete ———	~	— Class "A" Total Cubic Yards 3.96 Incl. setting 3 Posts

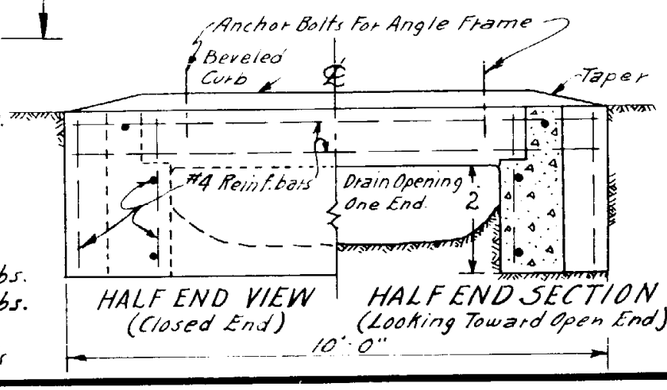

HALF END VIEW
(Closed End)

HALF END SECTION
(Looking Toward Open End)

ARIZONA HIGHWAY DEPARTMENT
PLANS DIVISION

RANCH CATTLE GUARD
FOR SIDEROAD ONLY

MODIFICATION DESIGN BY	Leslie McDougall 5-15-54	DRAWING NO.
DRAWN	L.O. Moe 11-4-57	C-14-X
CHECKED	J.P.O. 1-30-58	
APPROVED ENGR. OF PLANS	[illegible]	

REV. 12/1/58

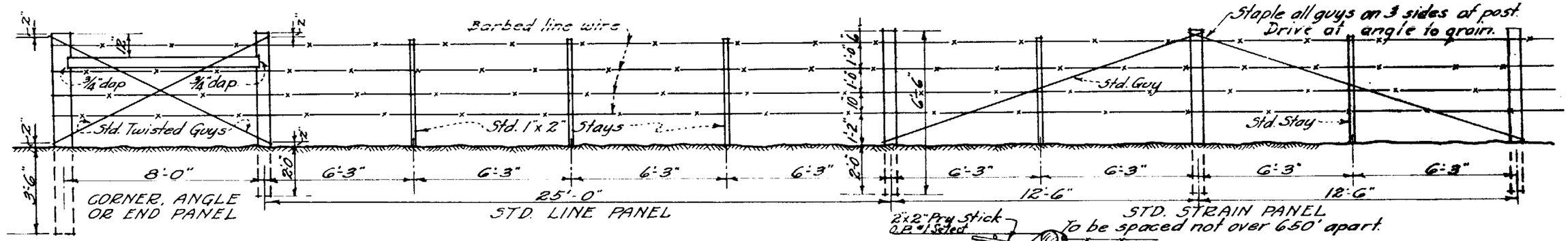

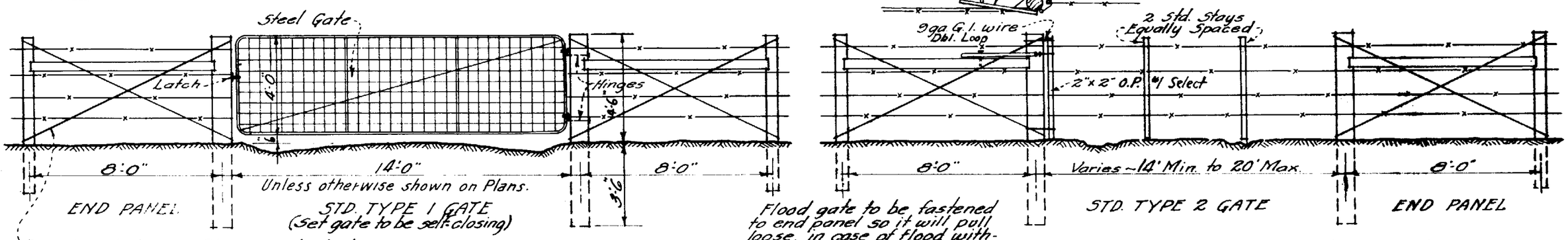

Flood gate to be fastened to end panel so it will pull loose, in case of flood without wrecking fence.

Guy wires to be 9ga. G.I. wire or barbed line wire in 2 complete loops with ends securely spliced and the 4 (or 8 if barbed wire is used) wires twisted to form a taut cable.

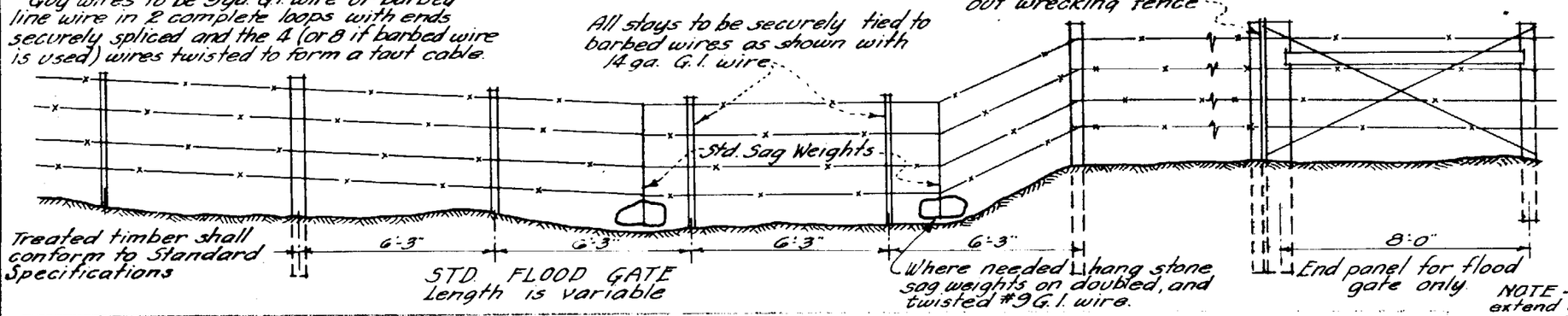

FENCE POSTS

Minimum Heartwood Req'd.

	End	Min.	Max.
End Cor. & Angle posts	Top	33.2"	50.3"
	Bottom	44.2"	78.5"
Line & Strain posts	Top	9.6"	12.6"
	Bottom	15.9"	38.5"

NOTE – No portion of fence shall extend outside of Hwy. R/W Line.

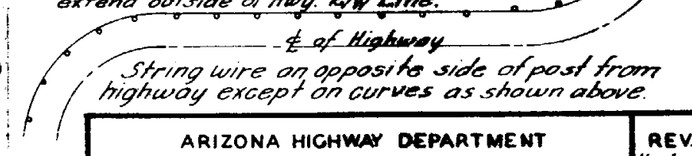

String wire on opposite side of post from highway except on curves as shown above.

LIST OF MATERIALS

ITEM	SPECIFICATION	ITEM	SPECIFICATION
End, corner & Angle Posts	Native Juniper, Native Cedar or Native Cypress 8' long - 6½" to 8" top diam. - 7½" to 10" butt diam. or Treated Timber 6"x 6"x 8'-0"	Type 1 Gate	Frame - 1⅜" diam G.I. Tubing - 2 Vert. braces (G.I.) Filler Fabric - G.I. Mesh □, △, or ◊. - Line wires 11ga - Cross wires 12½ ga. - One adjustable diagonal guy from corner to corner. Min weight of gate - 70 lbs.
Line & Strain Posts	Native Juniper, Native Cedar or Native Cypress. 6'-6" Long - 3½" to 5" top diam - 4½" to 7" butt diam. or Treated Timber 4"x 4"x 6'-6"	Hinges #1 Gate	Approved galvanized malleable iron or steel.
Gate Post	Native Juniper, Native Cedar or Native Cypress. 8' long - 8" Min. diam. or Treated Timber 6"x 6"x 8'-0"	Latch #1 Gate	Approved 2 way self closing galvanized. malleable iron or steel.
Barbed line wire	G.I. Barbed Cattle wire 12½ ga - 14 ga. Galv. barbs @ 5" ± intervals.	Loops #2 Gate	9 ga. Galv. wire.
Fence Stays.	Rough Sawed Ponderosa Pine - 1"x 2"x 4'-4"	Sag weights	9 ga. Galv. wire (and stone)
End panel braces	Native Juniper, Cedar or Cypress - 4" to 6" diam. or Treated Timber - 4"x 4"	Stay tie wires	14 ga. Galv. wire.
End Piece #2 Gate	Rough Sawed O.P. #1 Select 2"x 2"x 4'-6"	Guy wires	9 ga. Galv. wire.
		Staples	1½" polished wire
		Nails for braces	16 d. Galv. wire.

Refer Std. C-16-A

ARIZONA HIGHWAY DEPARTMENT
PLANS DIVISION

LINE FENCE AND GATES WOOD POSTS

DRAWN	K.S.	6/1/38
TRACED	K.S.	6/1/38
CHECKED	H.H.W.	7/20/38
APPROVED ENGR. PLANS		

DRAWING NO. C-15

REV. Heartwood 3-25-41 Treated Timber 8-1-41 3-20-50 12/1/58 1-4-60

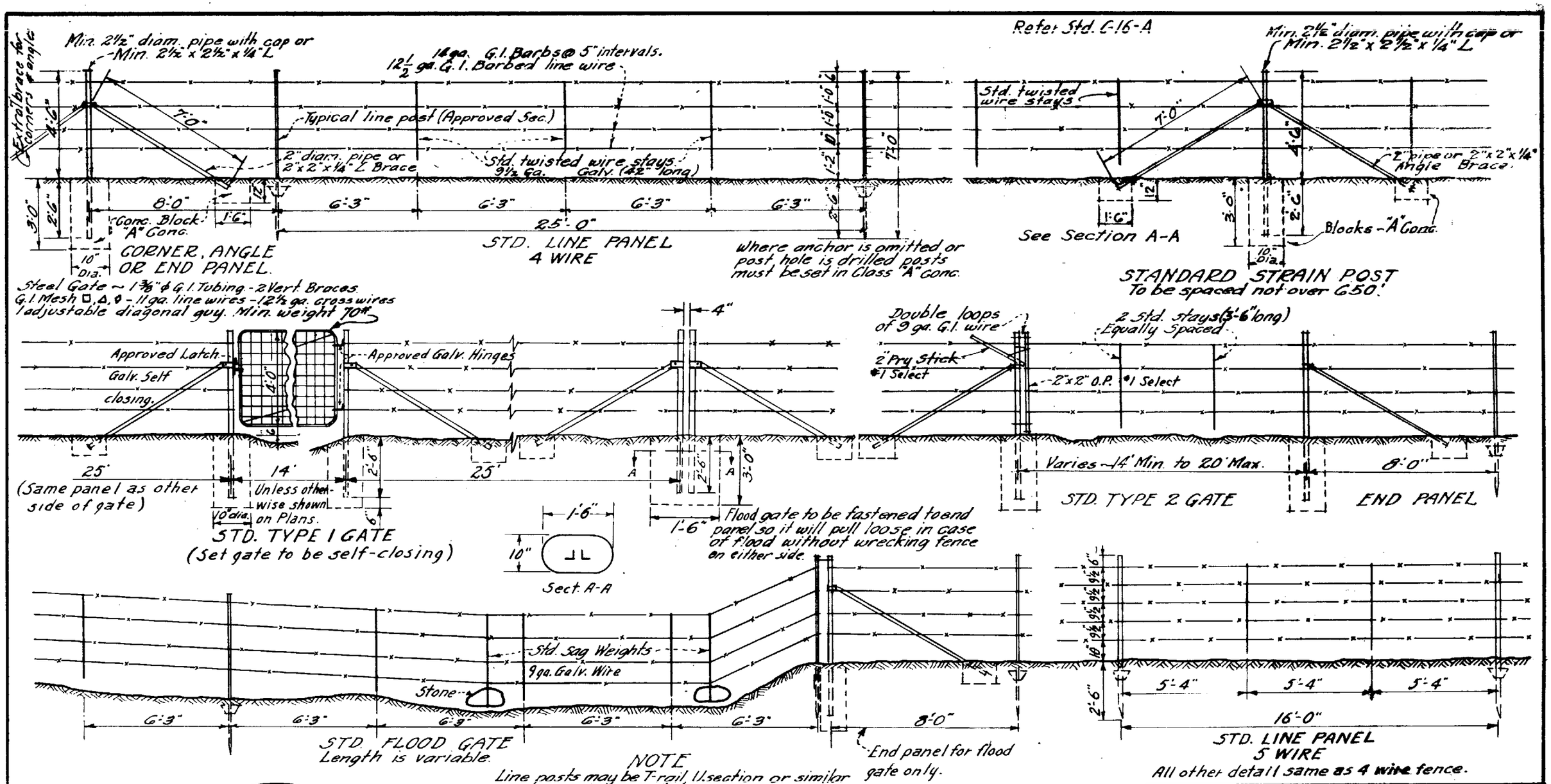

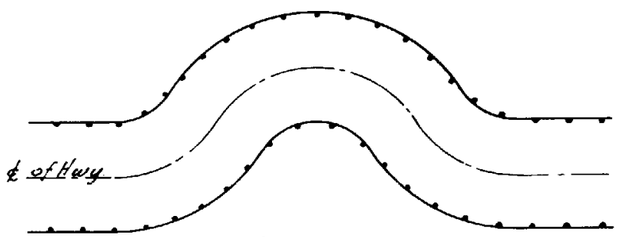

Wire shall be strung on opposite side of post from highway except on curves as shown.

No portion of fence shall extend outside of Highway Right of Way Line.

NOTE

Line posts may be T-rail, U section or similar commercial production (excepting angles or ells). They shall be rail steel grade and rolled from standard section Tee rails or re-rolled rails, both produced by the open hearth process. They shall have punched web, knobs or corrugated edges to hold wire in position and weigh 1.30 lbs. per ft. minimum exclusive of anchor.

Clamps of 10 ga. (or heavier) galv. wire shall be provided for attaching fence. Punched lug type fasteners are not permitted.

All posts and braces shall be painted to manufacturer's standard or galvanized.

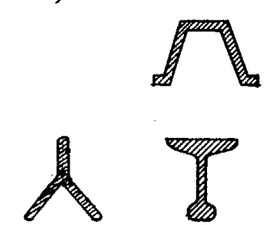

TYPICAL STEEL LINE POST SECTIONS.

ARIZONA HIGHWAY DEPARTMENT

PLANS DIVISION

LINE FENCE AND GATES STEEL POSTS

DRAWN	K.S.	JUNE, 1938	DRAWING NO.
TRACED	K.S.	JUNE, 1938	C-16
CHECKED	H.H.W.	July 1938	
APPROVED ENGR. PLANS	HHW		

REV.
Stays & Sag Note 2/25/41
Strung Post 6/12/49
3-20-50
3-8-54
Note Chg. 2/9/55
6/29/55
12/1/58
1-4-60

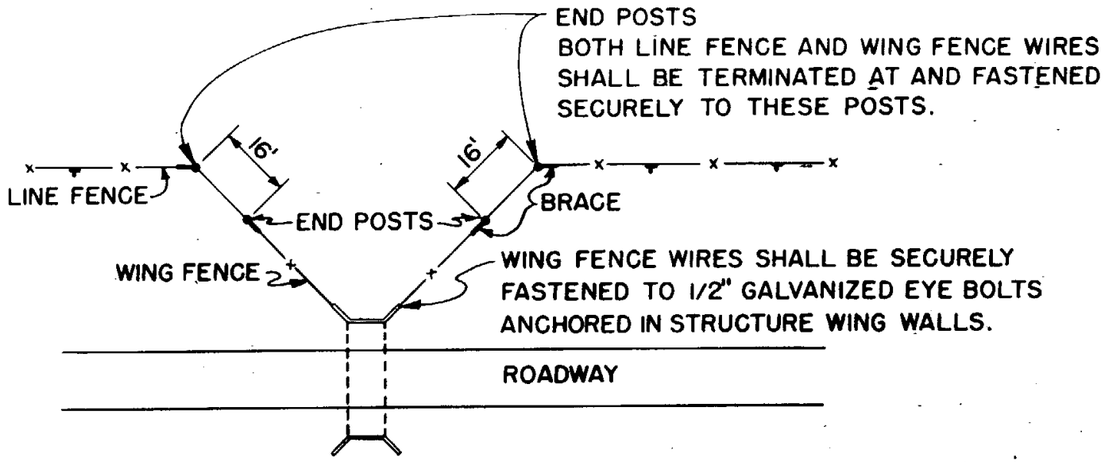

WING FENCE DETAIL

THIS DETAIL SHALL BE USED LT. AND RT. WHERE WING FENCES ARE CALLED FOR ON PLANS.

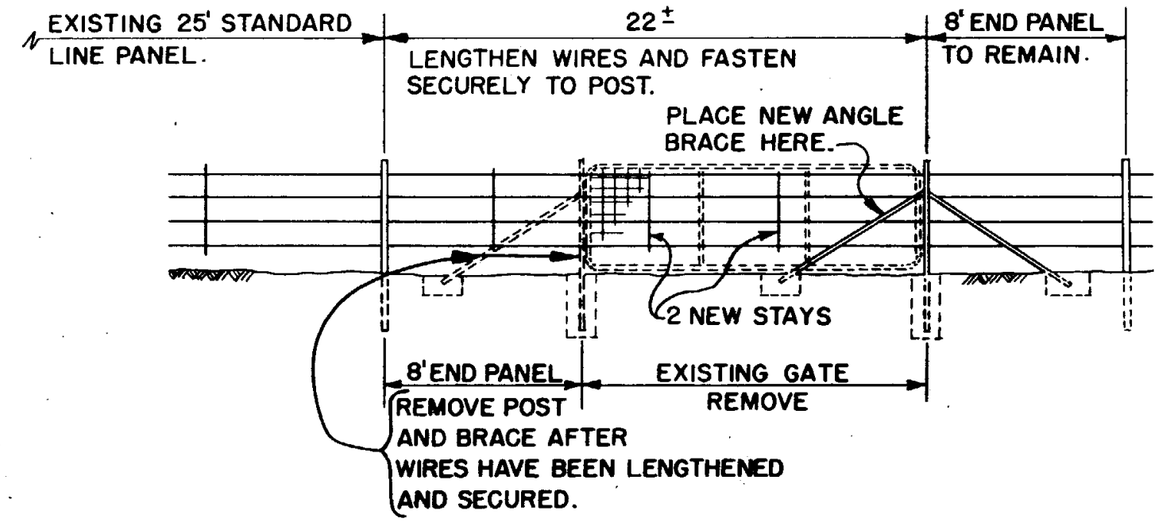

DETAIL FOR ELIMINATING EXISTING LINE GATES

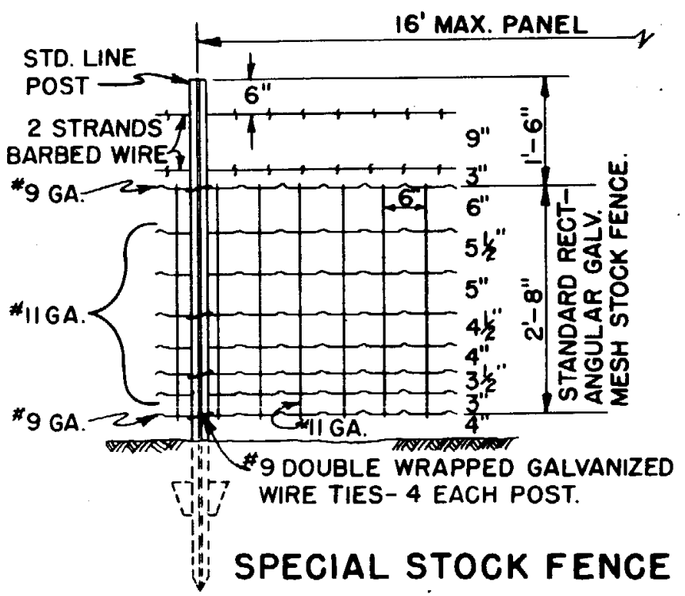

SPECIAL STOCK FENCE

REFER TO STD. C-16 FOR DETAILS NOT SHOWN.

ARIZONA HIGHWAY DEPARTMENT PLANS DIVISION			REV.
SUPPLEMENTAL FENCE DETAILS			
DRAWN	L.O. MOE 4-14-60	DRAWING NO.	
TRACED	L.O. MOE 4-19-60	C-16-A	
CHECKED	4-21-60		
APPROVED ENGR. PLANS	G Heidecke		

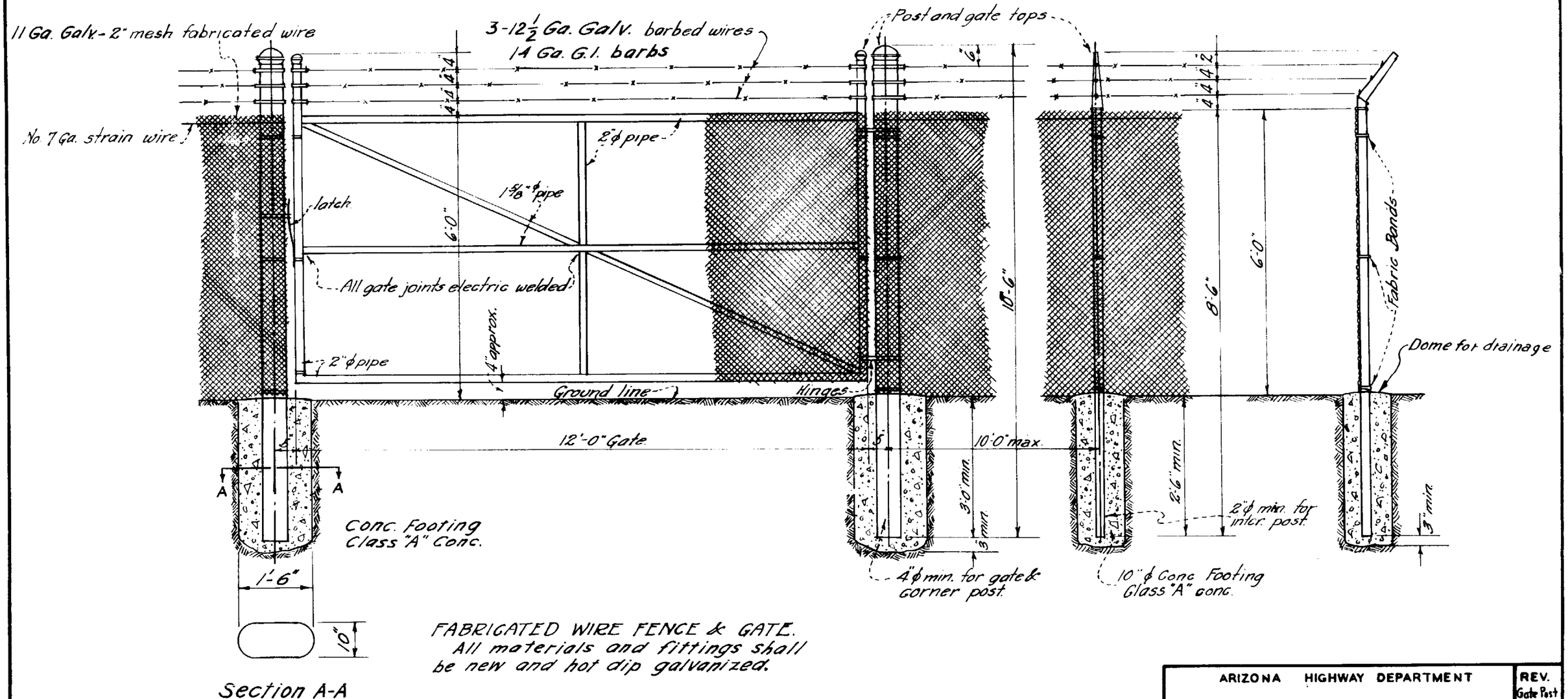

FABRICATED WIRE FENCE & GATE.
All materials and fittings shall be new and hot dip galvanized.

ARIZONA HIGHWAY DEPARTMENT

PLANS DIVISION

INDUSTRIAL TYPE FABRICATED WIRE FENCE

DRAWN BY	W.M.D. Jan. 1936	DRAWING NO.
TRACED BY	K.S. July 1938	C-17
CHECKED BY	H.H.W. July 1938	
APPROVED BY Engr. of Plans	H.H. Wessel	

REV.
Gate Post 4-29-52
G.H. 12/1/58

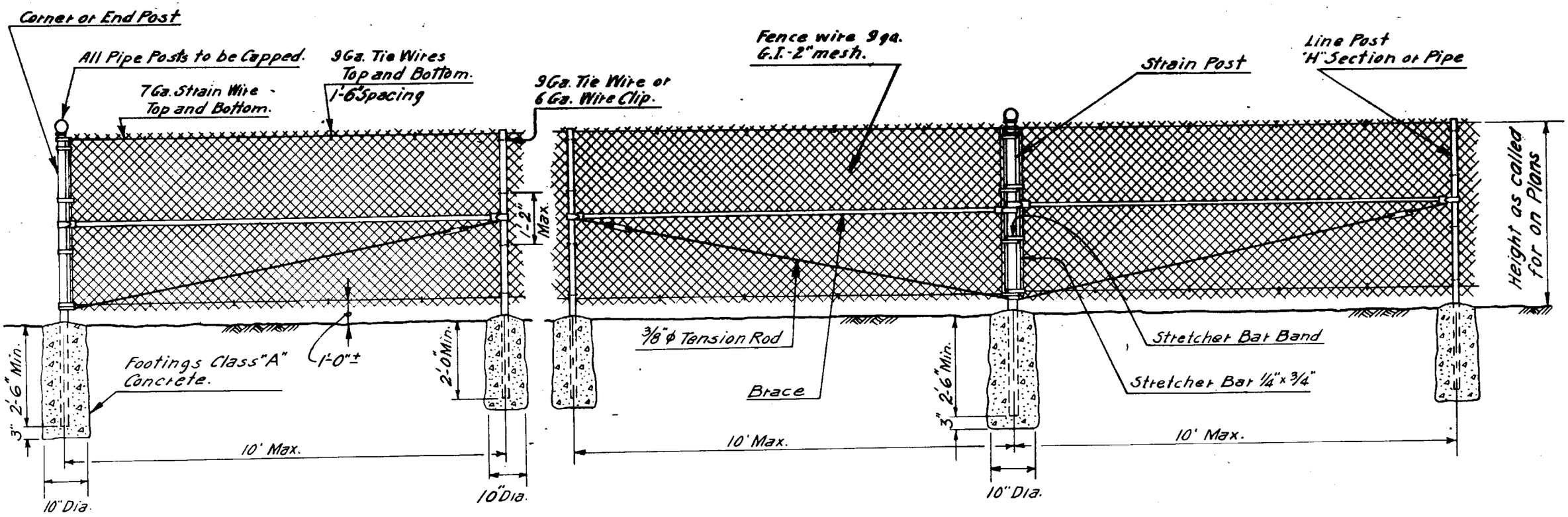

CORNER OR END PANEL

STRAIN PANELS
To be spaced at 500' intervals

Strain, End & Corner Posts	Pipe 2½" O.D. – 3.65 lbs. per lin. ft. min.
Line Posts	Pipe 2" O.D. – 2.72 lbs. per lin. ft. min. "H" Sec. 1.625" x 1.875" – 2.80 lbs. per lin. ft. min.
Braces	Pipe 1⅝" O.D. – 2.27 lbs. per lin. ft. min. "H" Sec. 1.5" x 1.31" – 2.2 lbs. per lin. ft. min.

Note:
All material and fittings shall be new and hot dip galvanized.

ARIZONA HIGHWAY DEPARTMENT
PLANS DIVISION

REV. 12/1/58 1/4/60

FENCE
CHAIN LINK

DRAWN BY	L.A. Moe 2-6-58	DRAWING NO.
TRACED BY	L.A. Moe 2-6-58	C-17-A
CHECKED BY	J.P.D. 2-7-58	
APPROVED ENGR. OF PLANS	S.Heidecker	

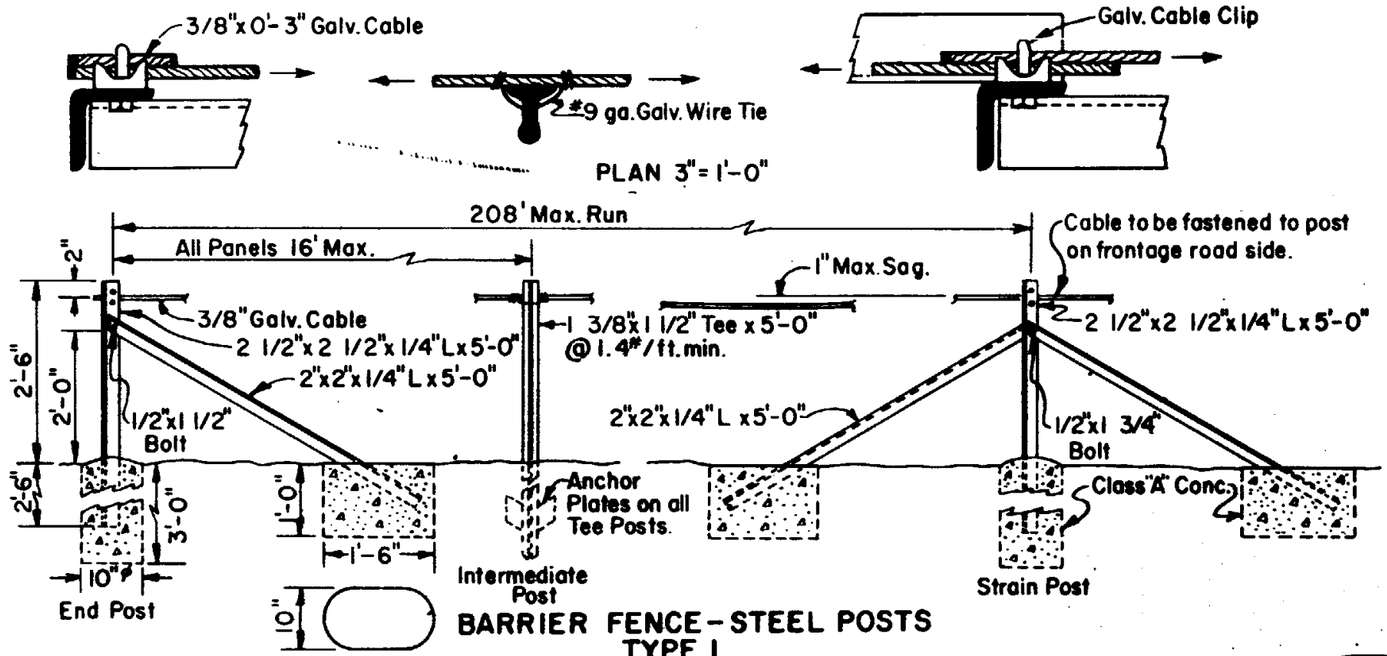

BARRIER FENCE - STEEL POSTS
TYPE 1
Elev. 1/2" = 1'-0"

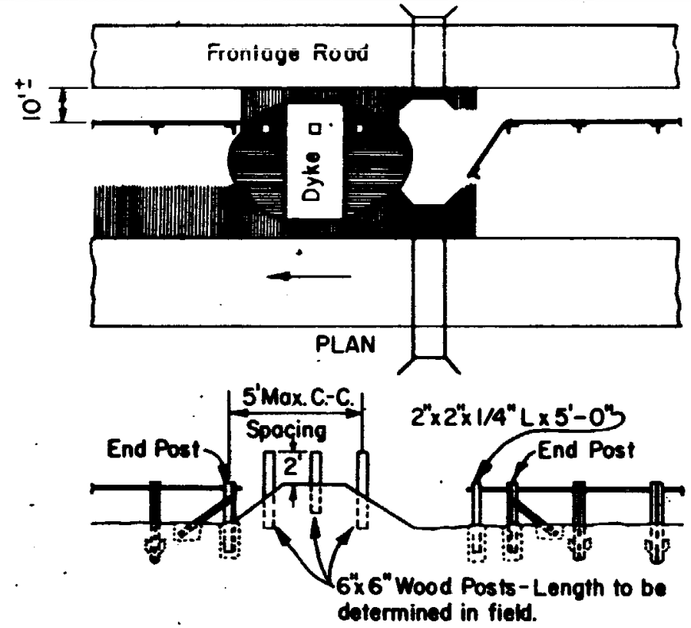

ELEVATION FOR TYPE 1

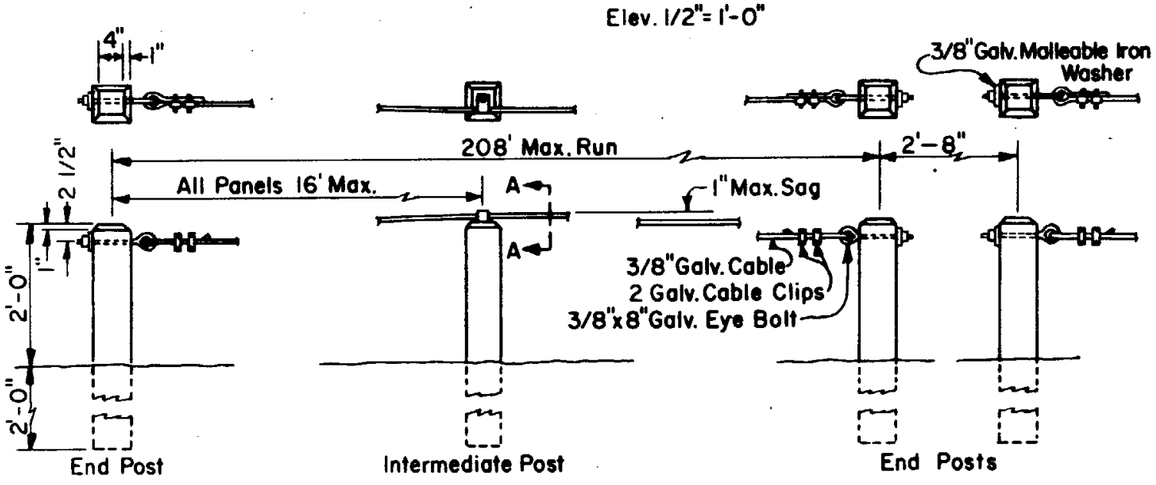

BARRIER FENCE - WOOD POSTS
TYPE 2
Scale 1/2" = 1'-0"

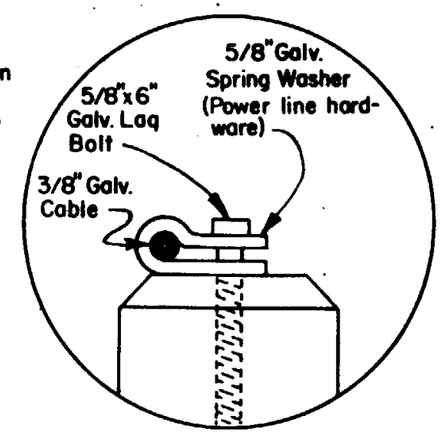

Section A-A
Scale 3" = 1'-0"

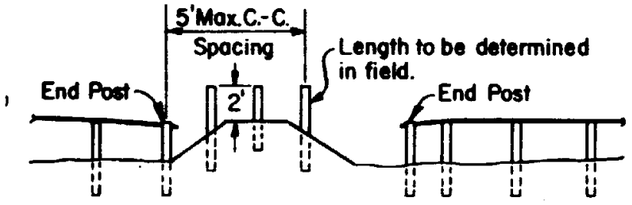

ELEVATION FOR TYPE 2

TYPICAL INSTALLATION AT DYKES

Barrier Fence shall be used only to prevent promiscuous vehicular crossings between roadways and shall not be used where accident prevention devices are necessary nor where physical barriers are present.

Notes:
Cable shall be 3/8" ϕ galvanized strand - 7 wire common - 4200# test.
Wood posts shall be nominal 6"x6" rough sawn, pressure treated and unpainted.
Allowable species, grading and pressure treatment shall conform to the requirements of the 1960 Standard Specifications for Road Guard Posts.

ARIZONA HIGHWAY DEPARTMENT
PLANS DIVISION

REV.

BARRIER FENCE

DRAWN	L.O. MOE 3-18-60	DRAWING NO.
TRACED	L.O. MOE 3-28-60	C-17-B
CHECKED	4-21-60	
APPROVED ENGR. PLANS	H. Heidecke	

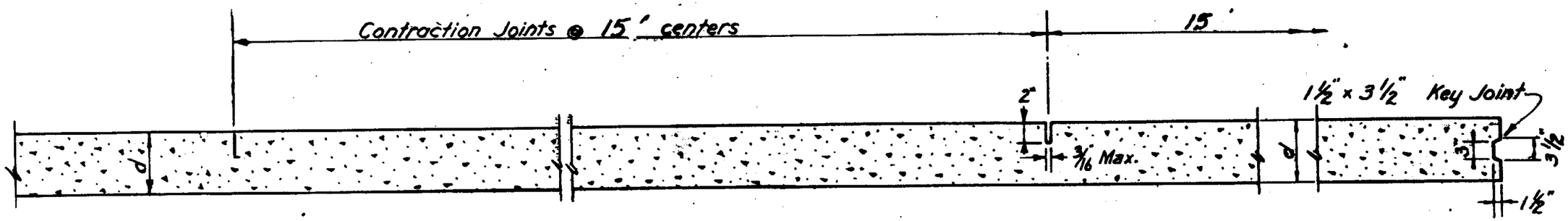

CONTRACTION CONTROL JOINT
See Detail

SAWED
CONTRACTION JOINT

CONSTRUCTION JOINT

LONGITUDINAL SECTION THRU PAVEMENT

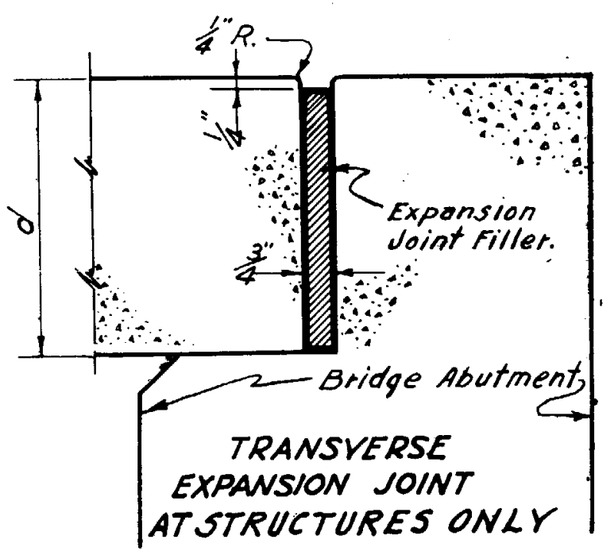

TRANSVERSE
EXPANSION JOINT
AT STRUCTURES ONLY

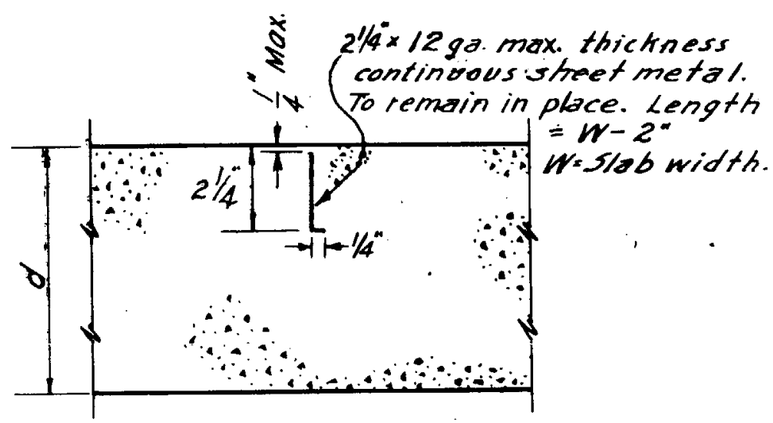

TRANSVERSE
CONTRACTION CONTROL JOINT
60' Max. Spacing

All transverse joints shall match location of joints in adjacent slabs.

All general requirements may be superseded by special notations on the plans.

At intersections of side roads or streets, joints shall be so placed as to give the intersection a symmetrical appearance and to conform to the cross section of the intersecting road or street.

ARIZONA HIGHWAY DEPARTMENT PLANS DIVISION			REV. 3/17/50 12/1/58 1/4/60
TRANSVERSE JOINTS FOR PORTLAND CEMENT CONCRETE PAVEMENT			
DRAWN	GH	Jan. 1946	DRAWING NO.
TRACED	GH	Jan. 1946	C-18
CHECKED	HHW		
APPROVED ENGR. PLANS	HH Wessel		

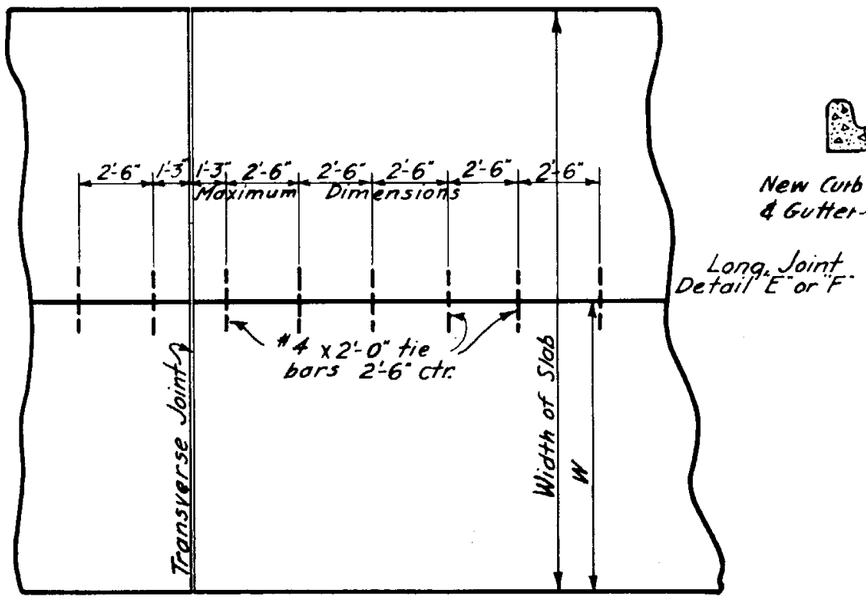

PLAN OF LONGITUDINAL JOINT
DETAIL "E" OR "F"

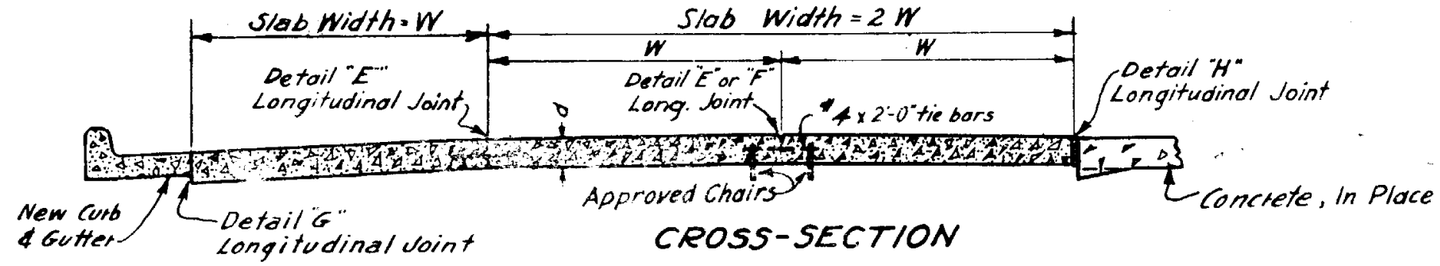

CROSS-SECTION

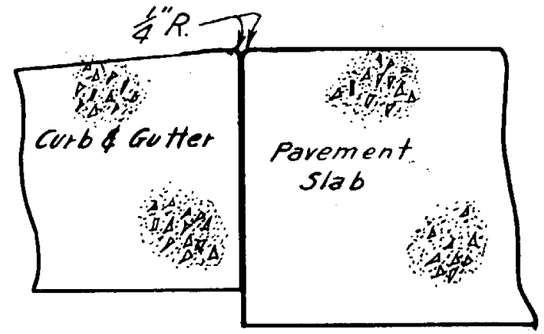

LONGITUDINAL JOINT
DETAIL "G"

Concrete pavement shall be placed prior to placing of curb & gutter. Curb & gutter joints to match location of joints in concrete pavement.

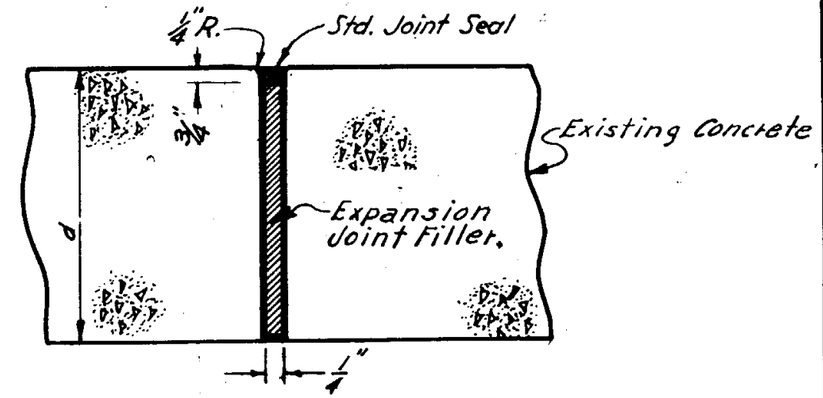

LONGITUDINAL JOINT
DETAIL "H"

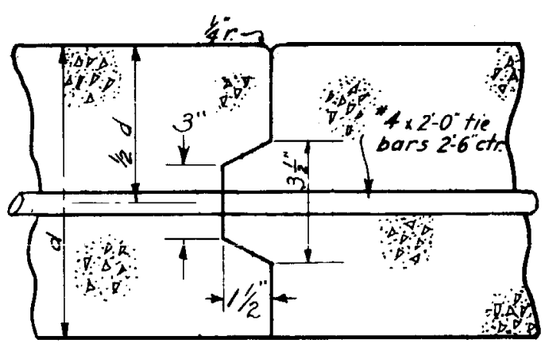

LONGITUDINAL JOINT
DETAIL "E"

If approved by the Engineer other keyway shapes may be used.

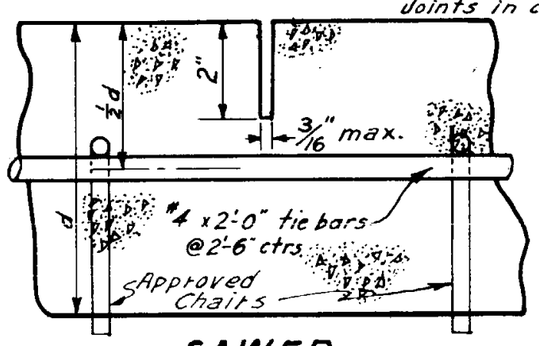

SAWED
LONGITUDINAL JOINT
DETAIL "F"

GENERAL NOTES

All tie bars in center joints shall be deformed bars and shall have unbroken bond. They shall be held securely in place, parallel to the subgrade & perpendicular to the center line of the road.

All formed longitudinal joints shall be finished with an edging tool not less than 12" wide and 18" long. Edging operation shall be followed by a burlap drag.
W = Width of traffic lane.
d = depth shown on Plans.

All general requirements may be superseded by special notations on the plans.

ARIZONA HIGHWAY DEPARTMENT
PLANS DIVISION

LONGITUDINAL JOINTS FOR PORTLAND CEMENT CONCRETE PAVEMENT

DRAWN	O.K.	MAR., 1935	DRAWING NO.
TRACED	H.A.K.	JUNE, 1938	C-19
CHECKED	H.H.W	JULY 1938	
APPROVED ENGR. PLANS	HH Wessel		

REV.
Dwg. 6-29-39
Tr. & Details 4-1-41
W 8-1-41
1-17-46
12/1/58
1/4/60

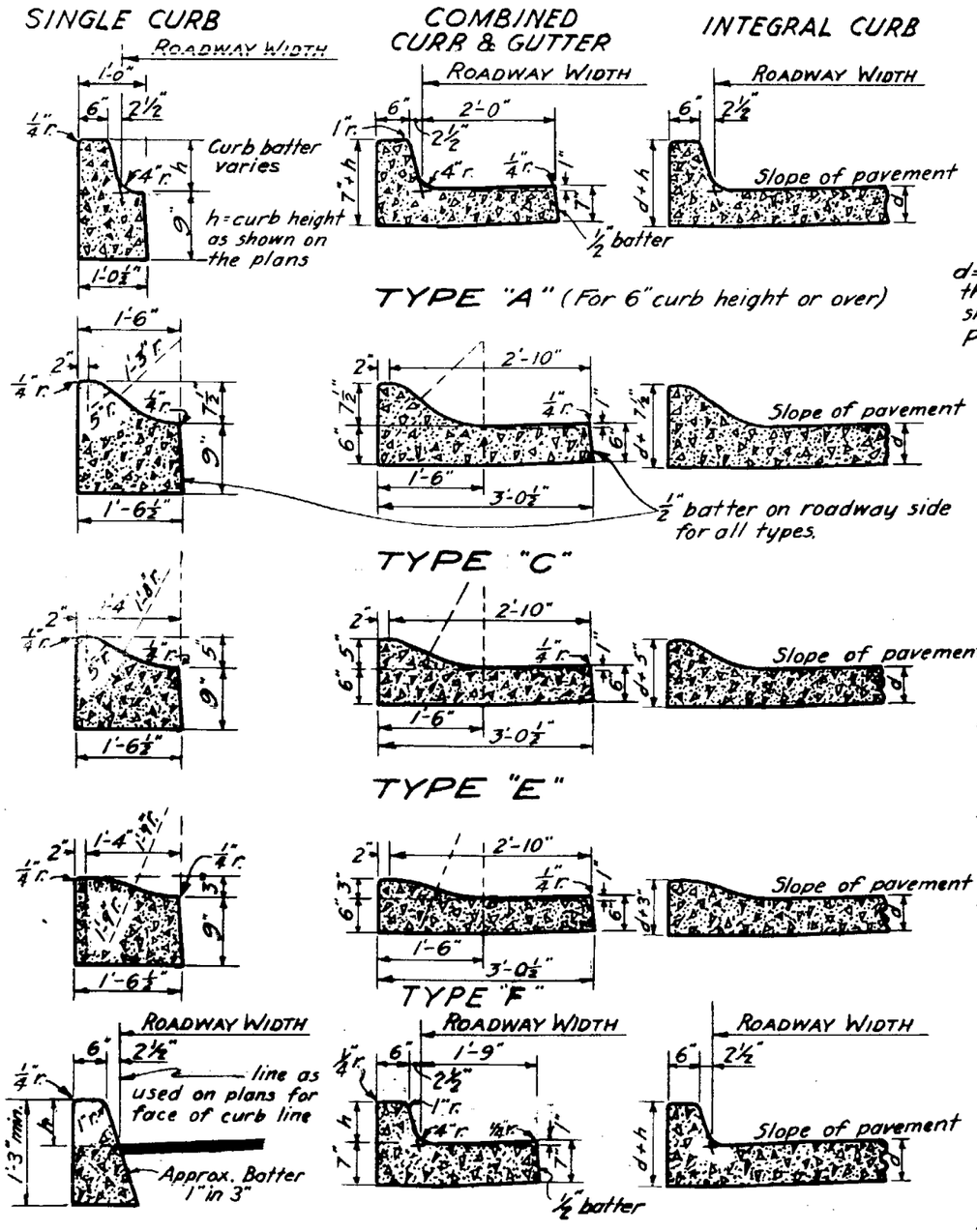

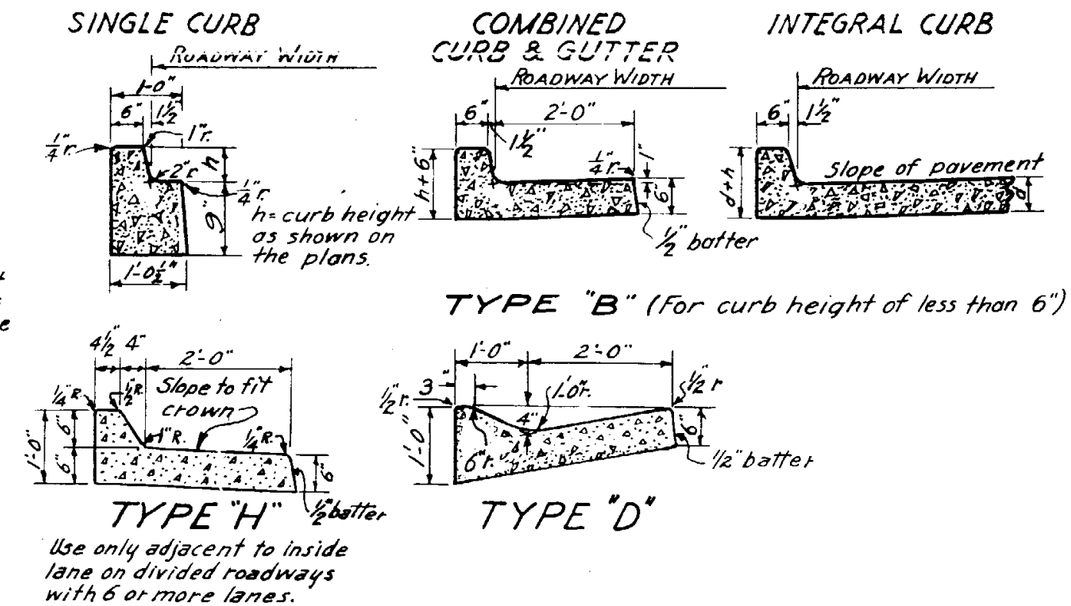

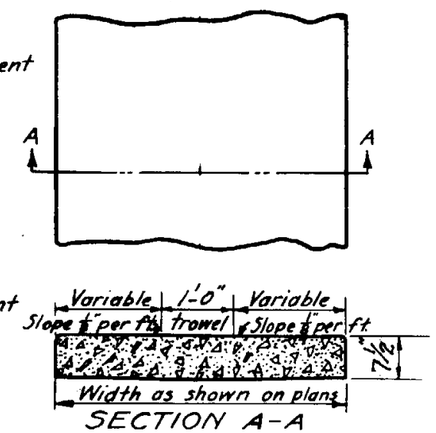

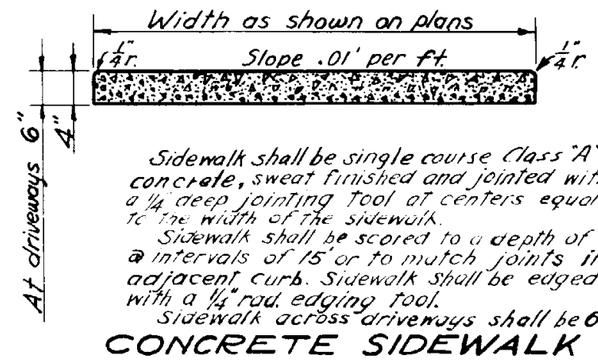

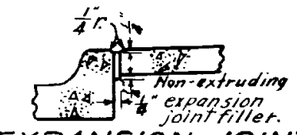

Payment for Joint filler shall be included in unit price bid for other items.

EXPANSION JOINT BETWEEN CURB & SIDEWALK

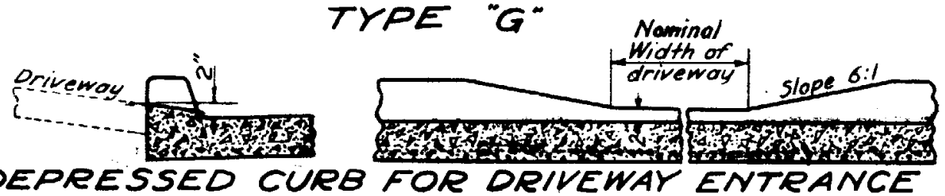

DEPRESSED CURB FOR DRIVEWAY ENTRANCE

GENERAL NOTES

All curbs & gutters to be single course Class "A" concrete.

All curbs shall be trowel finished.

All flow lines of gutters shall be troweled to an accurate grade for a width of 9"

Curbs, or curb & gutter shall have a 1/4" joint, extending all the way through the concrete, every 15 feet. Joints shall match those in adjacent pavement. The joint may be open or made with wood filler which may be left in place.

In integral curb all expansion & contraction joints shall extend through the curb.

Expansion joints to be placed at all radius points and structures.

ARIZONA HIGHWAY DEPARTMENT
PLANS DIVISION

CONCRETE CURBS, GUTTERS & SIDEWALKS

DRAWN	O.K. MAR., 1935	DRAWING NO.
TRACED	H.A.K. JUNE, 1938	C-20
CHECKED	H.H.W JULY 1938	
APPROVED ENGR. PLANS	H H Wesser	

REV.
R & Filler 3/15/61
3-31-50
12/1/58
1/4/60

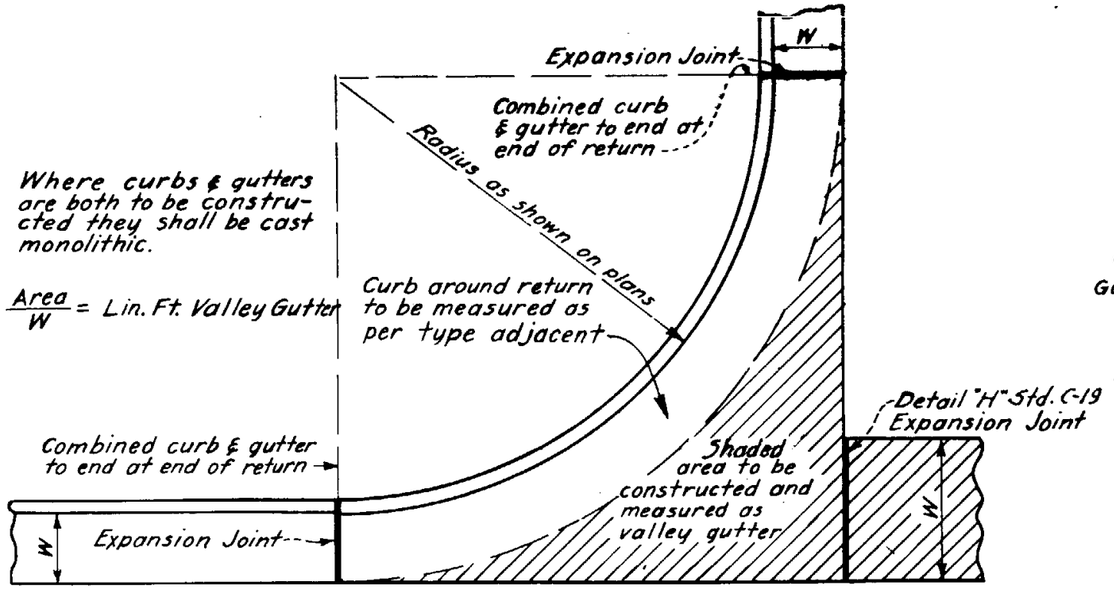

TYPICAL CONSTRUCTION OF VALLEY GUTTER AT STREET INTERSECTION OR ALLEY

W = width as shown on plans.

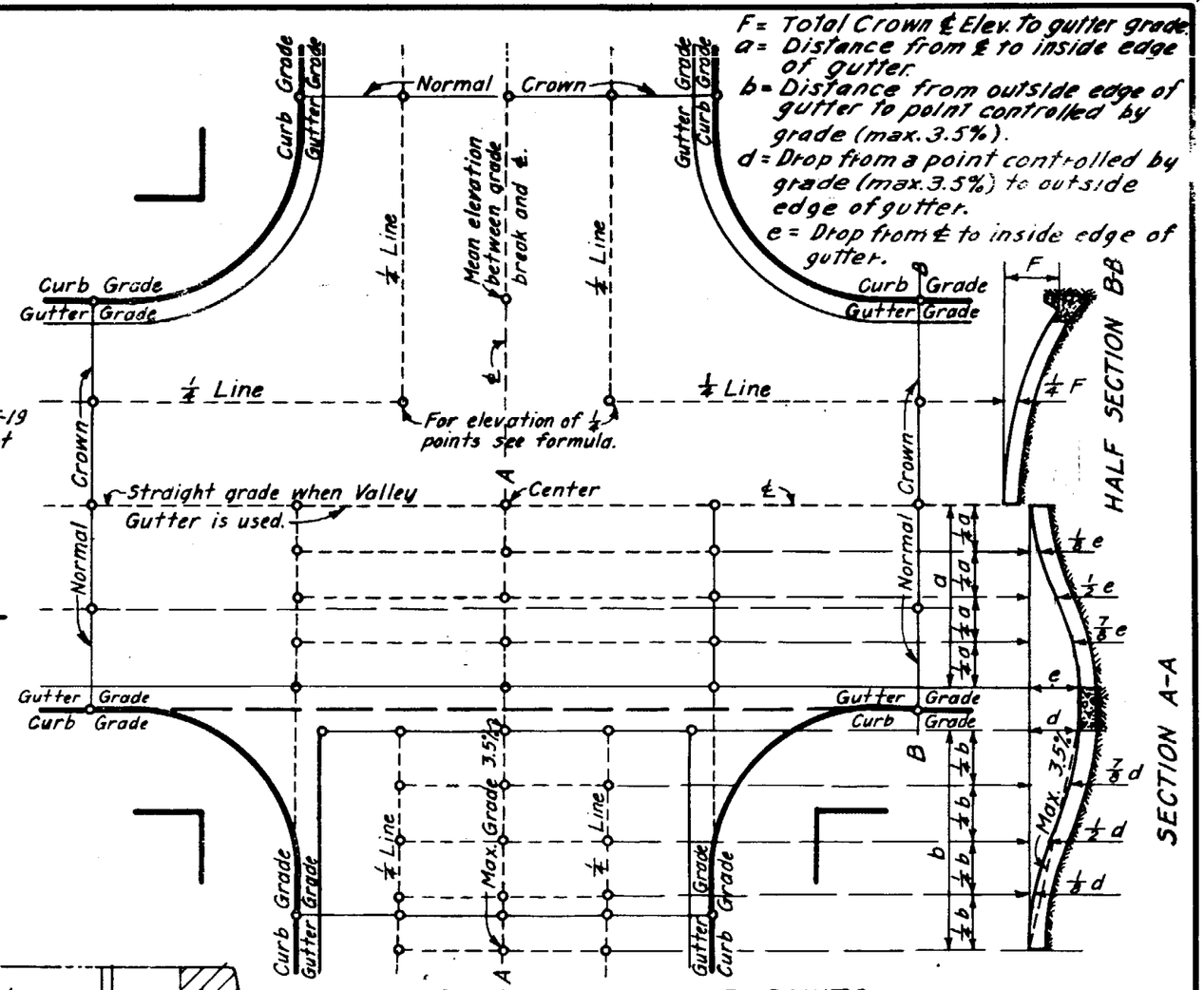

FORMULA FOR QUARTER POINTS

S = Sum of intersecting pavement widths.
D = Drop from center of intersection to center of return.
Where S = 0 to 90, P = 0.17
" S = " 100, P = 0.18
" S = 101 " 110, P = 0.19
" S = 111 " 130, P = 0.20
P = drop from center of intersection to the quarter point.

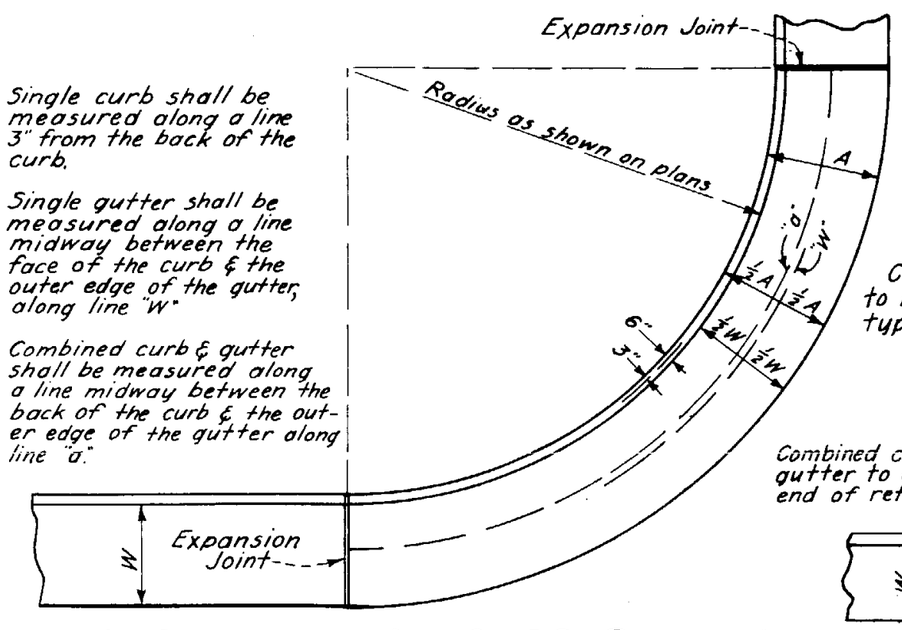

MEASUREMENT OF CURB, GUTTER OR COMBINED CURB & GUTTER ON CURVES

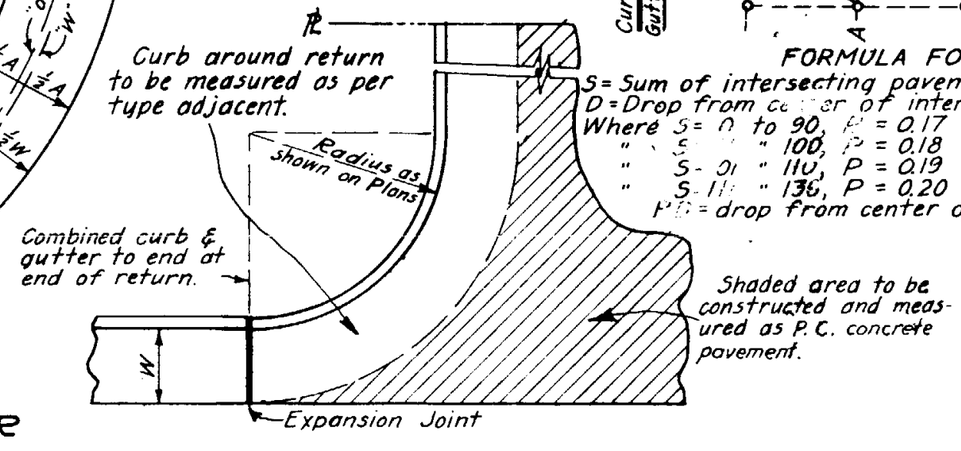

TYPICAL CONSTRUCTION OF CONCRETE ALLEYS OR DRIVEWAYS

ARIZONA HIGHWAY DEPARTMENT
PLANS DIVISION

REV. 12/1/58 1/4/60

CURB & GUTTER MEASUREMENT AND STREET INTERSECTION GRADES

DRAWN	O.K. & W.M.D. 1935-36	DRAWING NO.
TRACED	H.A.K. JUNE, 1938	C-21
CHECKED	H.H.W. JULY 1938	
APPROVED ENGR. PLANS	H. H. Wessel	

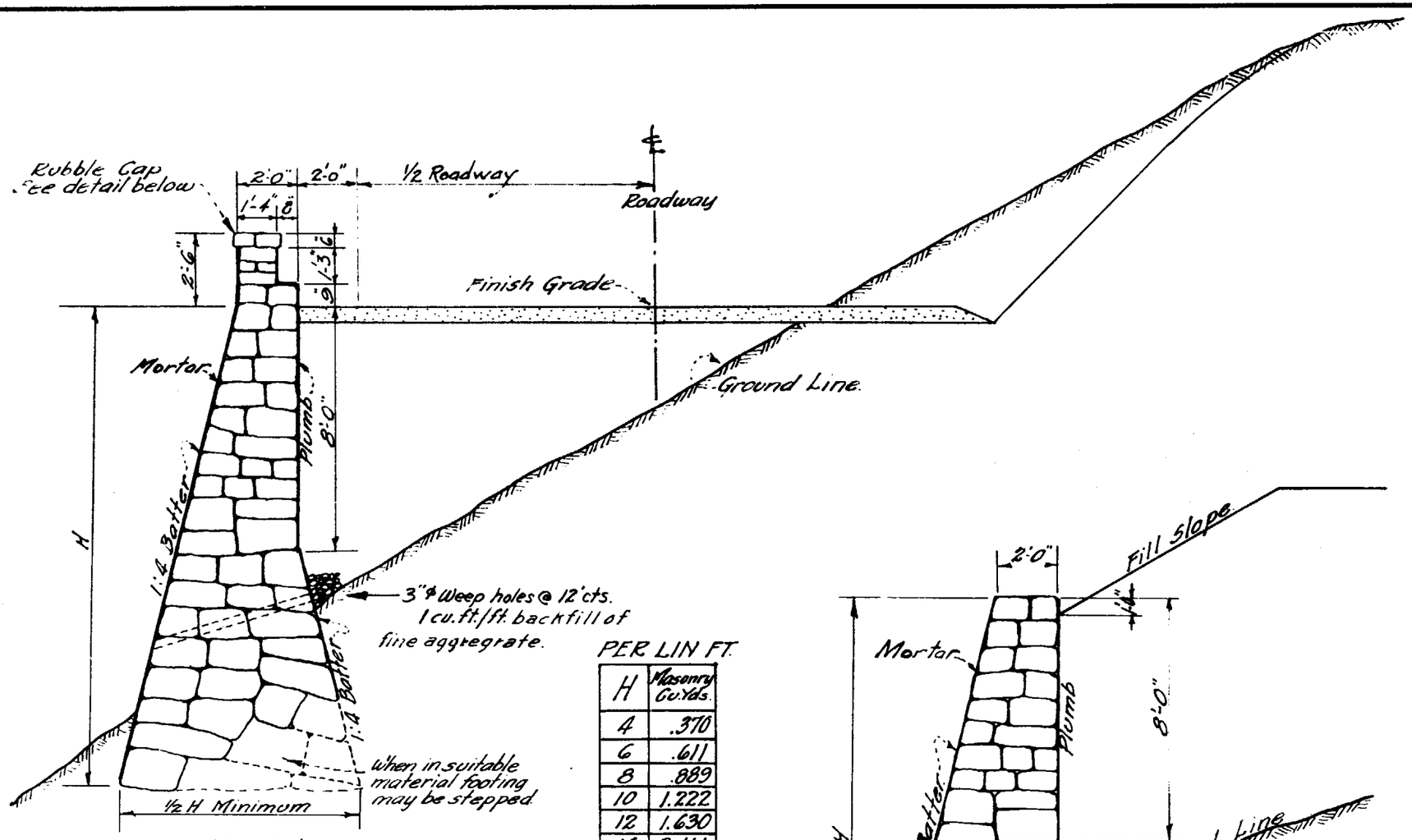

SECTION

TYPE A.

PER LIN FT.

H	Masonry Cu. Yds.
4	.370
6	.611
8	.889
10	1.222
12	1.630
14	2.111
16	2.667

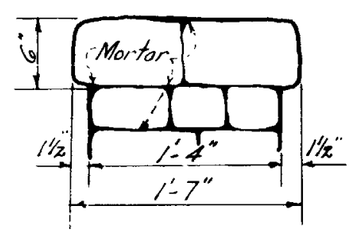

RUBBLE CAP DETAIL

Note:-
For parapet on top of retaining wall add per linear ft. .145 Cu. Yds. of masonry.

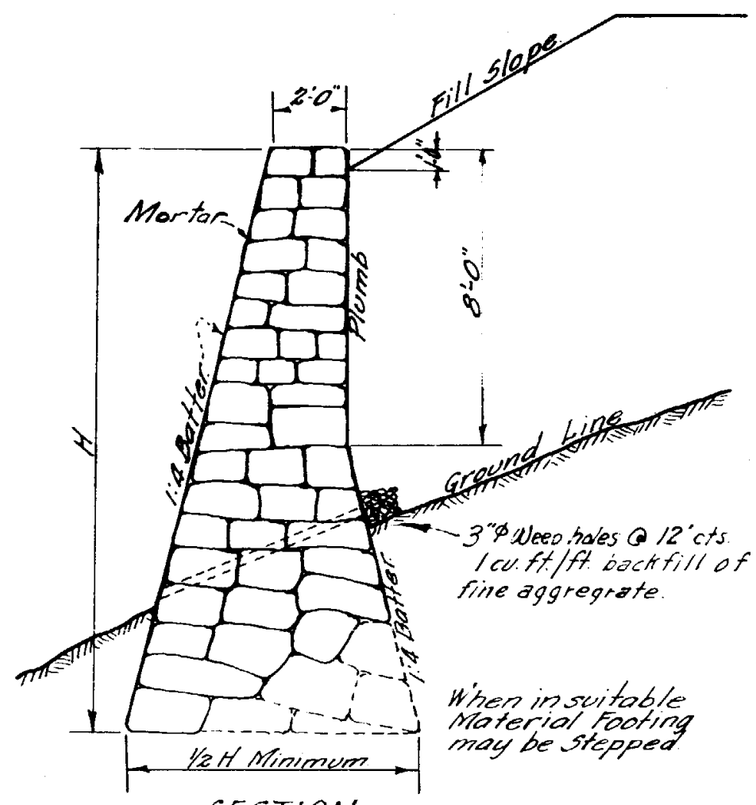

SECTION.

TYPE B

Material to be used in construction of wall shall comply with requirements of Std. Spec.

ARIZONA HIGHWAY DEPARTMENT
PLANS DIVISION

REV. 12/1/58 1/4/60

RUBBLE MASONRY RETAINING WALLS

DRAWN BY	W.M.D.	JAN. 1936	DRAWING NO.
TRACED BY	K.S.	JUNE, 1938	C-22
CHECKED BY	H.H.W.	JULY 1938	
APPROVED ENGR. OF PLANS			

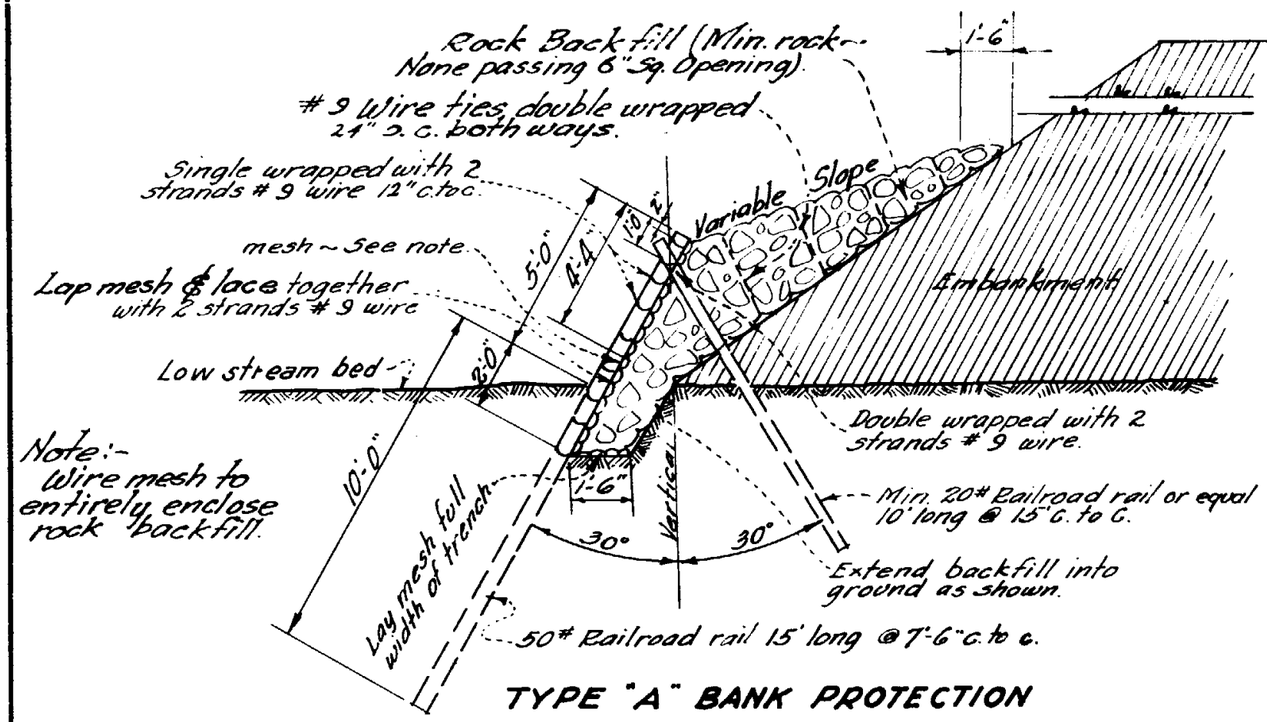

TYPE "A" BANK PROTECTION

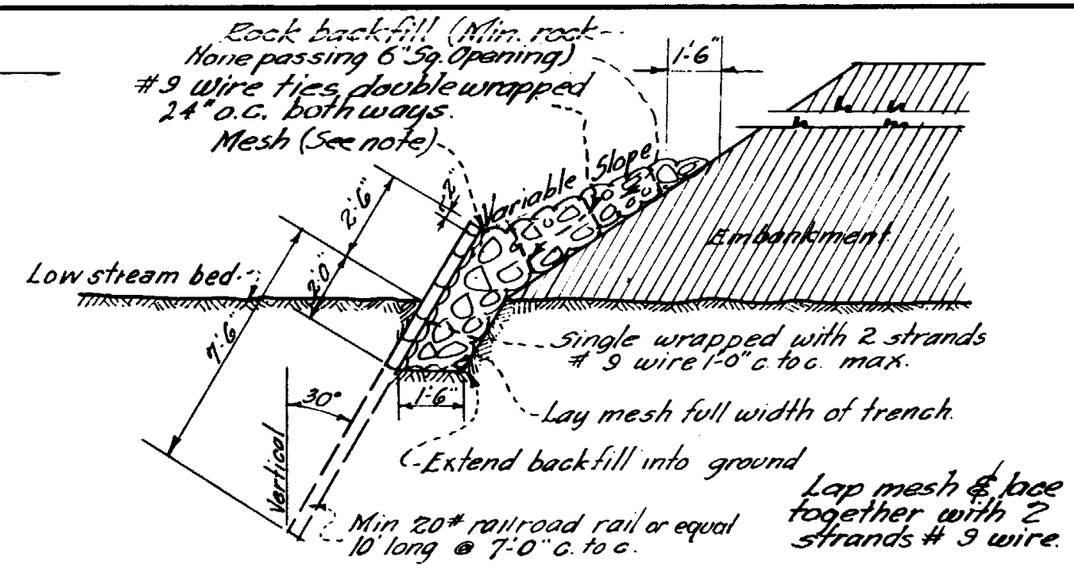

TYPE "B" BANK PROTECTION

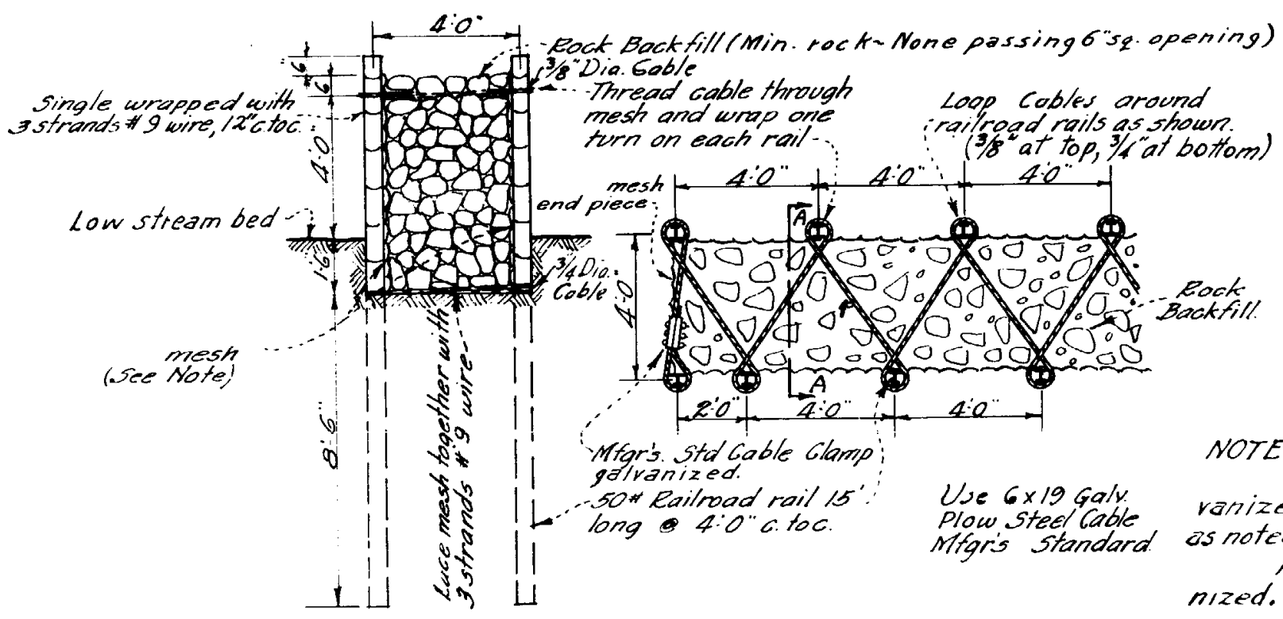

TYPE "C" BANK PROTECTION

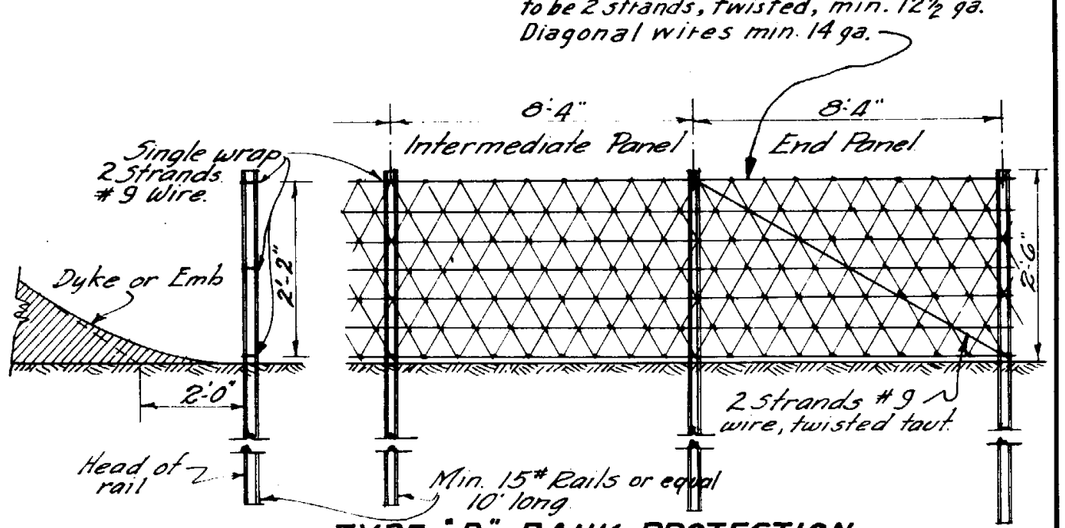

TYPE "D" BANK PROTECTION

NOTE:

Mesh shall be 6"x6" #10/#10 Galvanized welded wire fabric except as noted in type "D".

All wire and cable to be galvanized.

Where more than one width is used, lace together with 2 strands #9 wire and tie at every rail.

ARIZONA HIGHWAY DEPARTMENT

PLANS DIVISION

BANK PROTECTION
RAIL AND WIRE

DRAWN	H.A.K.	JUNE, 1935
TRACED	K.S.	JUNE, 1938
CHECKED	H.H.W.	July 1938
APPROVED ENGR PLANS	[illegible] Wessel	

DRAWING NO. C-23

REV.
Type "D" 11/8/41
12-20-45
6-21-47
3-20-50
9-19-55
12/1/58
1/4/60

TYPE C RIPRAP

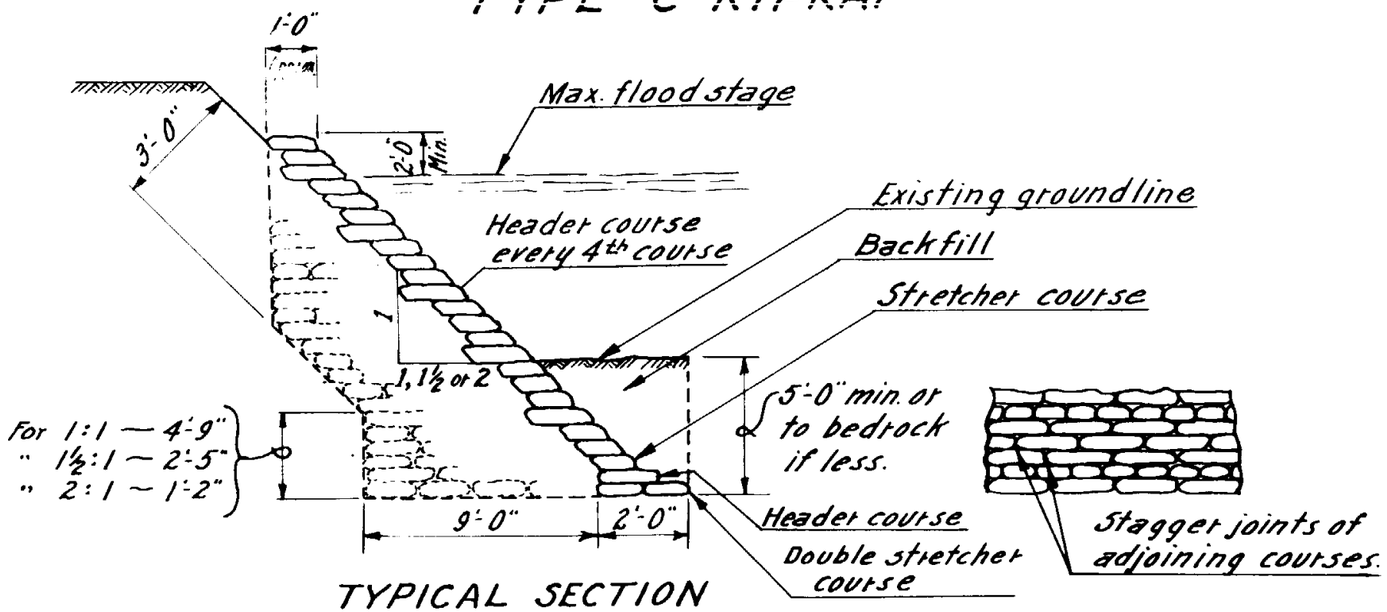

TYPICAL SECTION

TYPE A and B RIPRAP

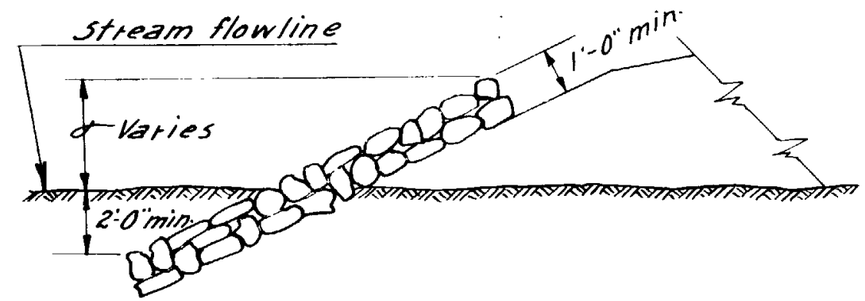

Type A (Plain hand placed)
Type B (Grouted hand placed)
Sacked concrete may be substituted for Type A or Type B.
Size of rock shall conform to Std. Specs.

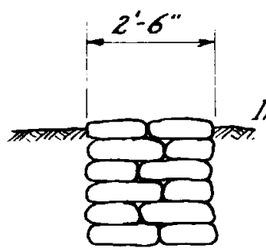

Section A-A

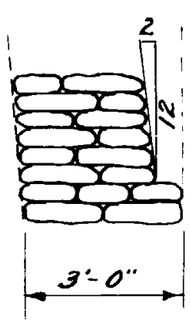

Section B-B

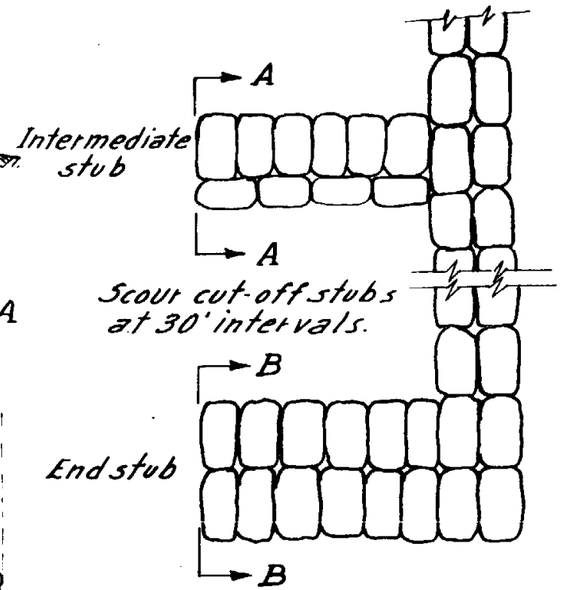

PLAN OF FIRST COURSE IN TRENCH

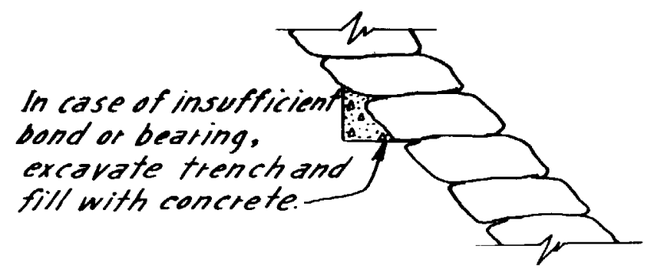

Note:
Special mix. 4 sack concrete shall be used, see Std. Specs. Sacked concrete riprap shall consist of 10 oz. burlap sacks containing one cubic foot of wet concrete when placed, unless otherwise specified. Stretchers shall be placed so that folded or tied ends will not be adjacent. Headers shall be placed with folds or ties toward the earth face. Not more than four vertical courses shall be placed in any tier until initial set has taken place in the first course of such tier.

ARIZONA HIGHWAY DEPARTMENT PLANS DIVISION			REV.
RIPRAP			
DRAWN	Tuinstra 3-1-58	DRAWING NO.	
TRACED	L. A. Moe 5-21-58	C-23-A	
CHECKED	12-1-58		
APPROVED ENGR. PLANS			

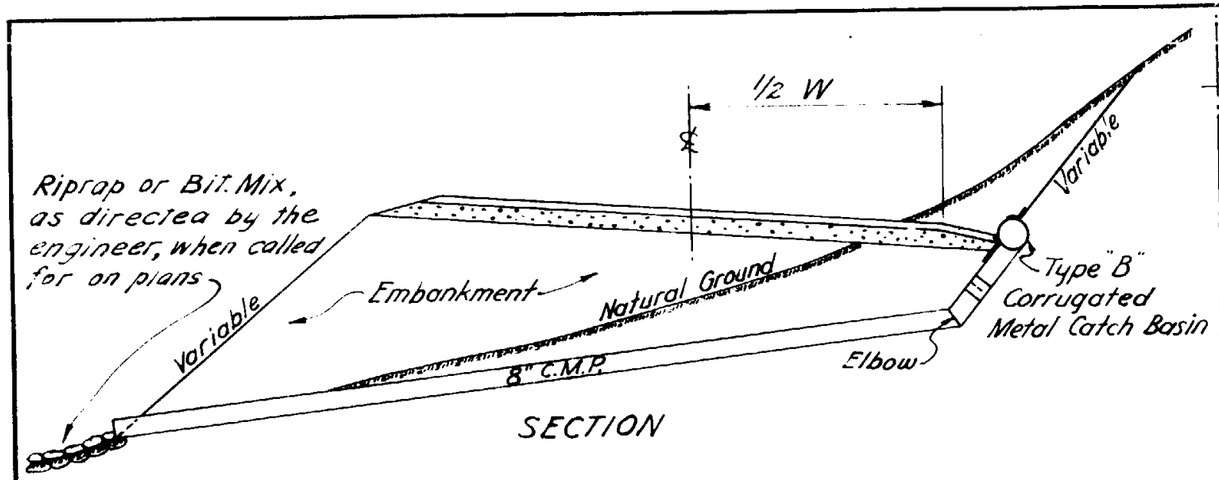

SECTION

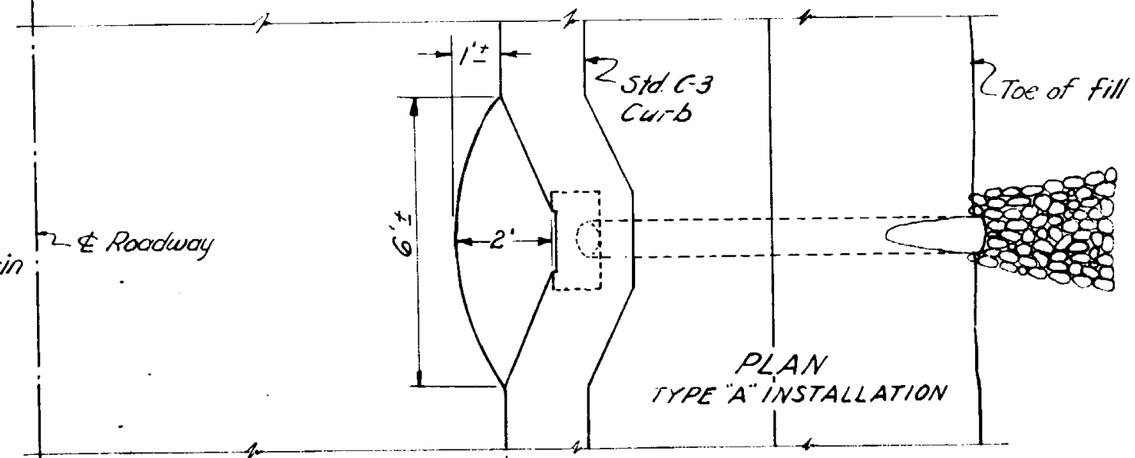

PLAN
TYPE "A" INSTALLATION

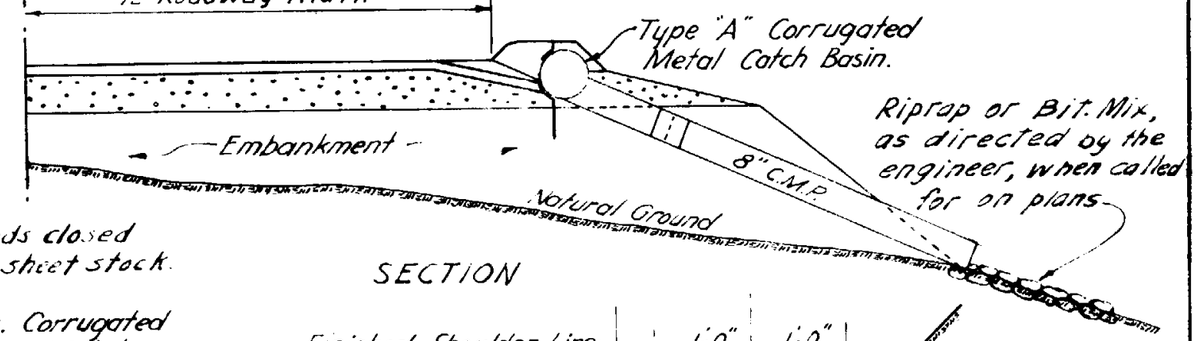

SECTION

Note—
include elbow as part of total length. Call for hinged band coupling for pipe joints. Use 12" band width for pipes over 12' long, 7" band width for pipes 12' long or less. Catch basin to have bituminous coating. C.M.P. shall be plain unless otherwise specified. Catch basin shall be shifted to fit the ground so as to lessen the angle in the C.M.P. as much as possible.

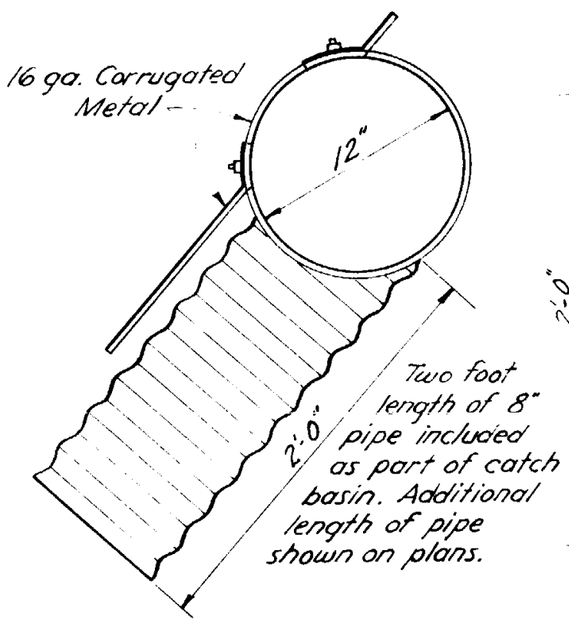

SIDE ELEVATION
TYPE "B"

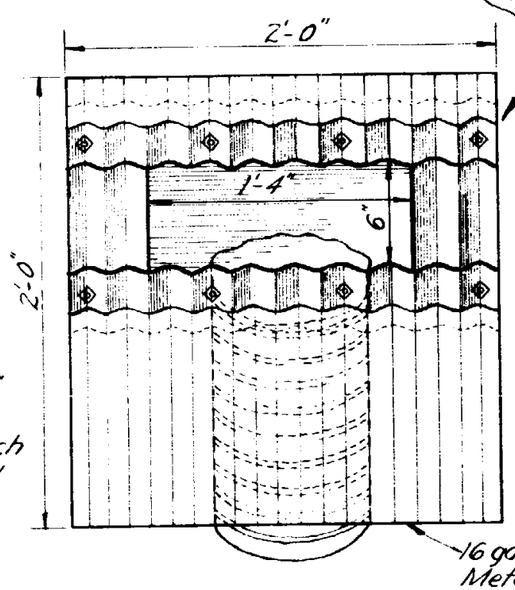

FRONT ELEVATION

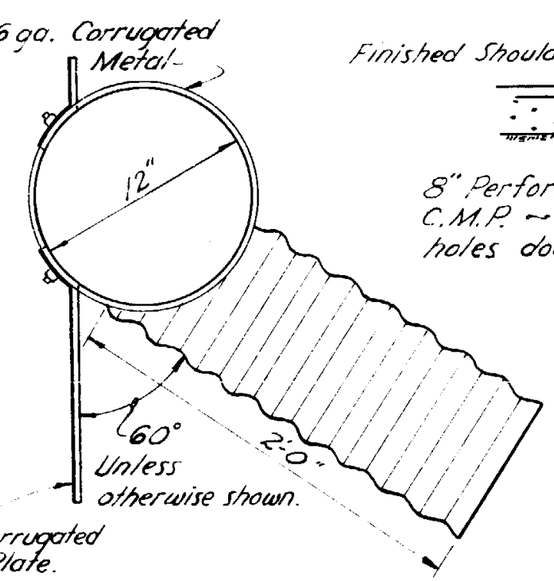

SIDE ELEVATION
TYPE "A"

CATCH BASINS

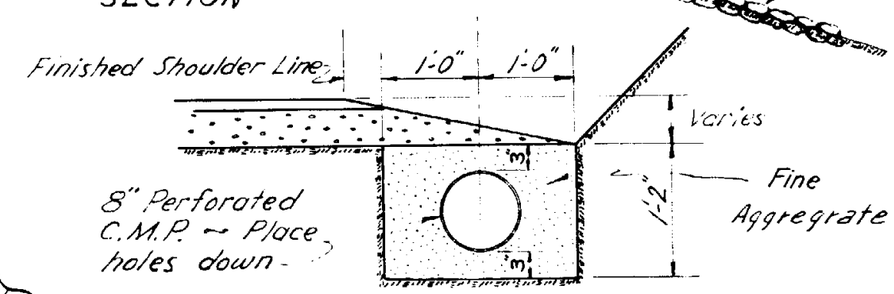

PERFORATED C.M.P. INSTALLATION

ARIZONA HIGHWAY DEPARTMENT
PLANS DIVISION

CORRUGATED METAL CATCH BASINS AND PERFORATED C.M.P.

DRAWN	C.B.B. July 1945	DRAWING NO.
TRACED	GH Nov. 1945	C-24
CHECKED	HHW	
APPROVED PLANS ENG'R.		

REV. 3/17/50 8/15/52

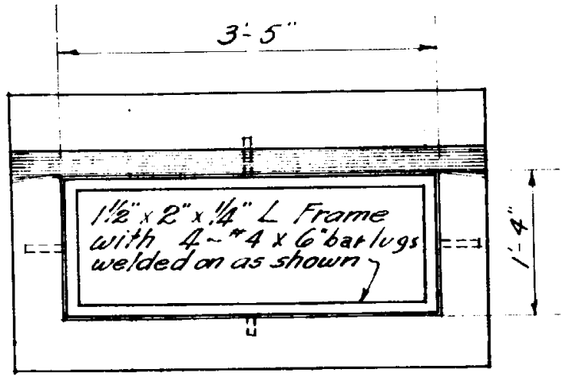

PLAN

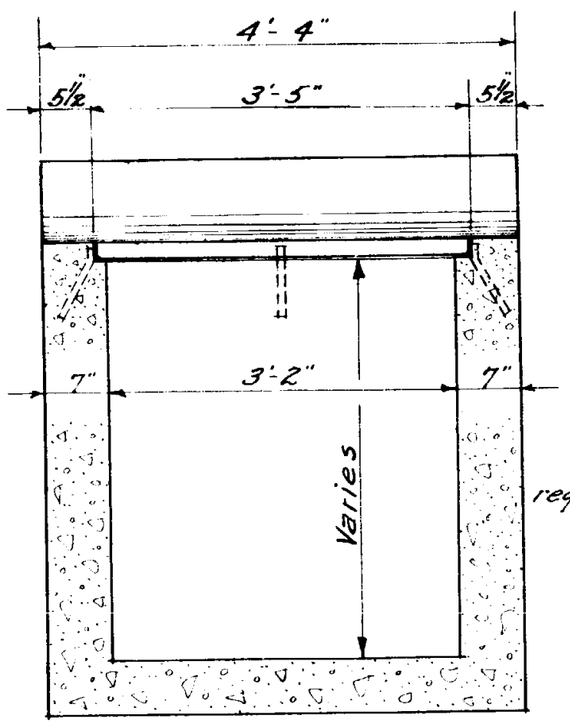

LONGITUDINAL SEC.

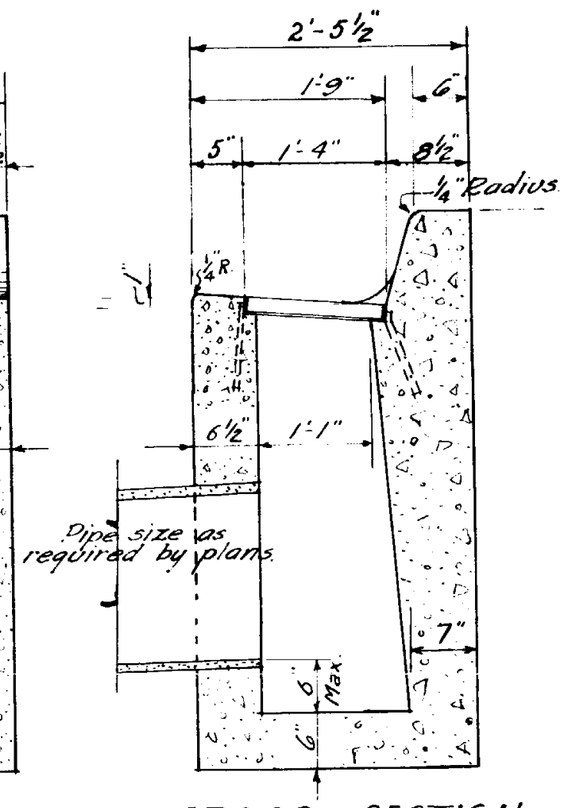

CROSS SECTION

DETAIL OF NO. 1 CATCH BASIN

Scale ~ ¾" = 1'-0"

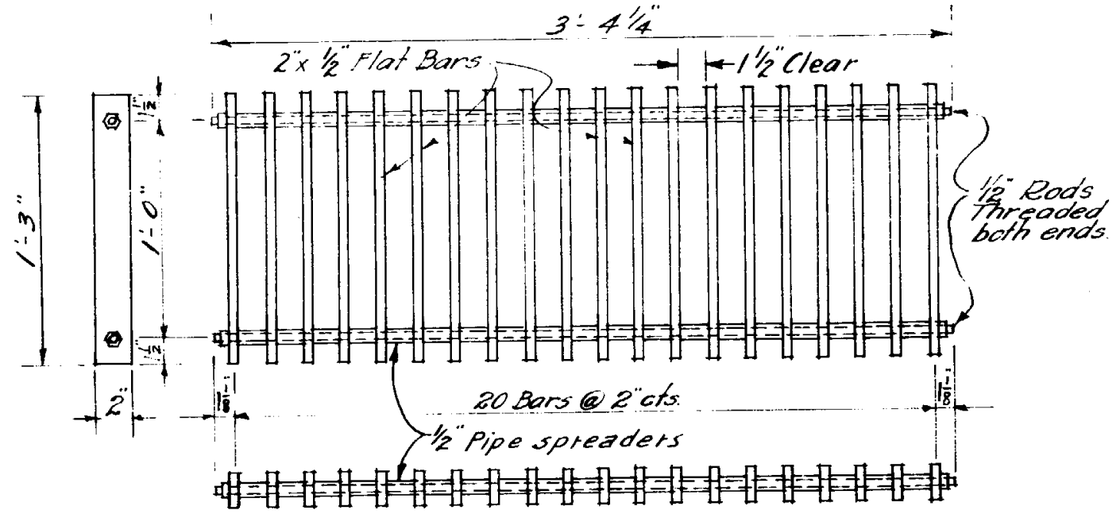

BAR GRATE

Scale ~ 1½" = 1'-0"

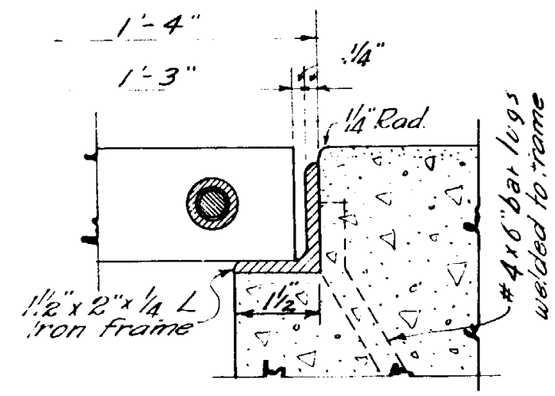

DETAIL OF ANGLE FRAME GRATE SUPPORT

Scale ~ ⅜" = 1"

GENERAL NOTES

Warp face of standard curb and gutter (or curb) into catch basin in lengths of 2 feet on each side.

The curb and gutter section of the catch basin shall conform in surface finish to the adjoining curb and gutter.

All concrete shall be class "A".

All exposed edges shall be finished to ¼" radius with a suitable edger.

Frame and grating units shall be structural steel A.S.T.M. A-7 painted one shop coat of No. 1 paint and one field coat of No. 3 paint.

When catch basins are located in curb returns, the catch basin curb face shall conform to the radius of the return.

Area of grate opening = 3.43 □'

ARIZONA HIGHWAY DEPARTMENT
PLANS DIVISION

CATCH BASIN NO. 1

DRAWN	H.H.W.	DRAWING NO.
TRACED	K.S	C-25
CHECKED	HHW.	
APPROVED	H. G. Wessel	

REV.
8-1-41
6-14-47
12/1/58

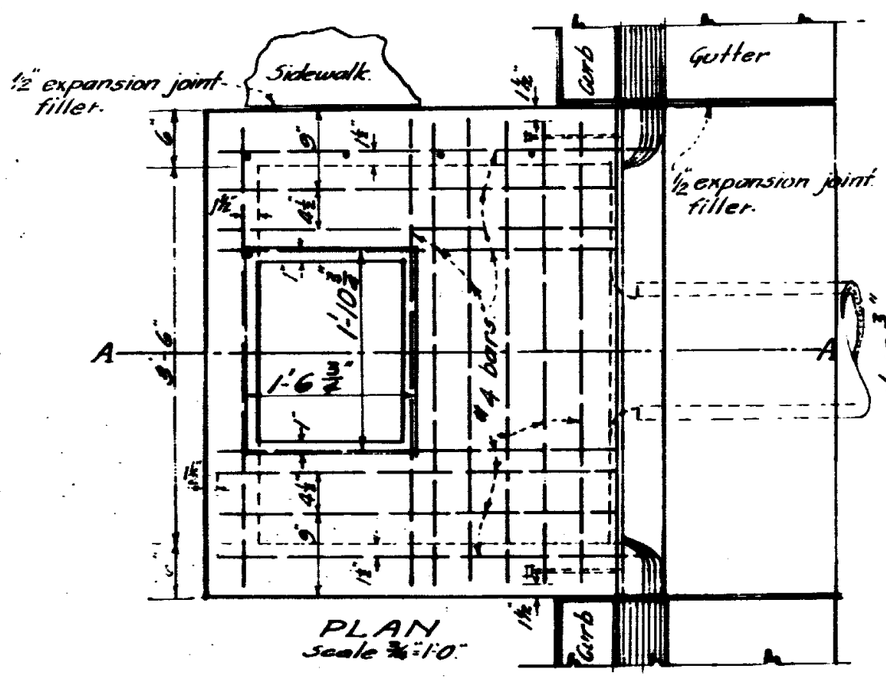

PLAN
Scale 3/4"=1'-0"

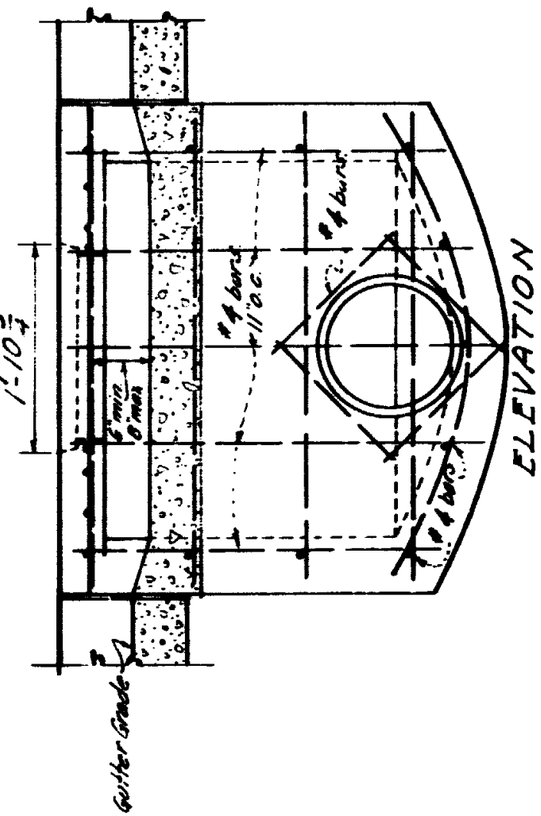

ELEVATION

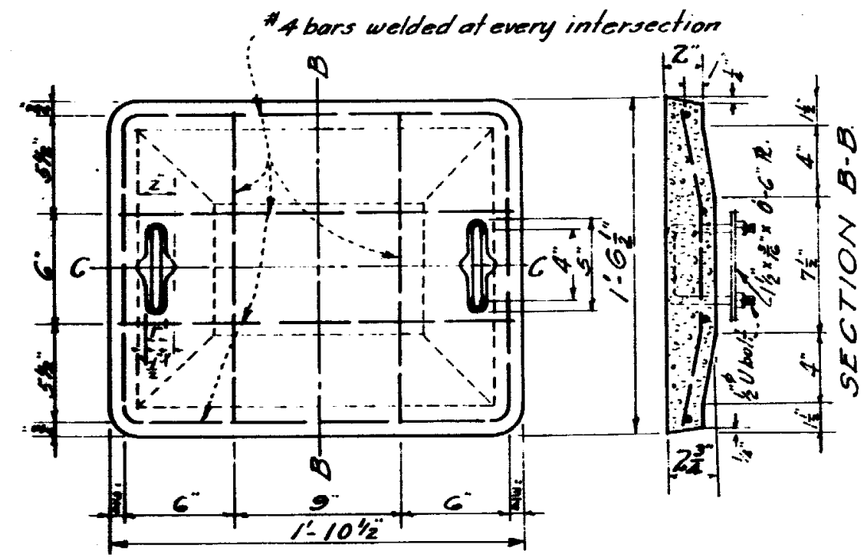

PLAN OF COVER
Scale 1 1/2"=1'-0"

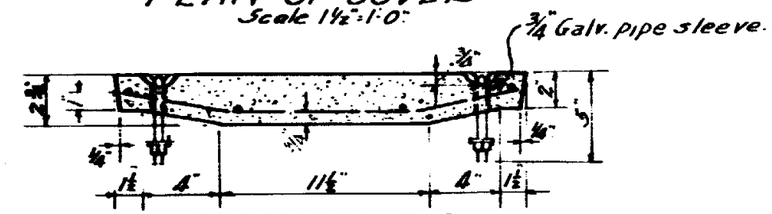

SECTION C-C.

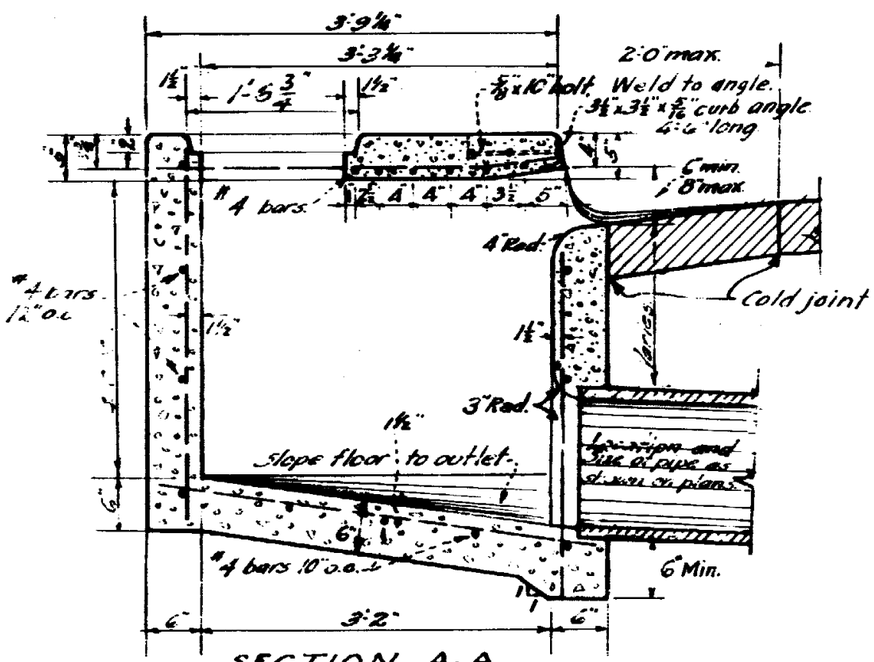

SECTION A-A.

The finish of the top slab shall conform in marking and finish to the adjacent concrete. Where no sidewalk exists the surface shall be trowel finished, without mortar coat.

The concrete cover shall be composed of one part Portland cement and three parts clean well graded aggregate. All other concrete shall be Class "A".

When catch basins are located in a curb return the angle iron above the inlet shall conform to the curvature of the curb.

All exposed edges shall be finished to 1/4" radius with a suitable edger.

Paint curb angle one shop coat of No. 1 paint and one field coat of No. 3 paint.

Area of curb opening = 1.75□" min. and 2.33□" max.

ARIZONA HIGHWAY DERARTMENT PLANS DIVISION			REV.
CATCH BASIN NO. 2			
Drawn	C.K.	Sept. '35	DRAWING NO.
Traced	K.S.	June '38	C-26
Checked	H.H.W	JULY 1938	
Approved: Eng. of Plans			

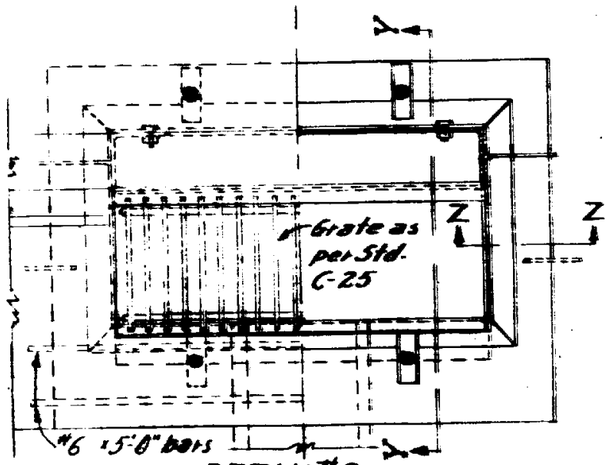

DETAIL #3

HALF PLAN GUTTER & GRATE

HALF PLAN FRAME & ANCHORS

Scale 3/4" = 1'-0"

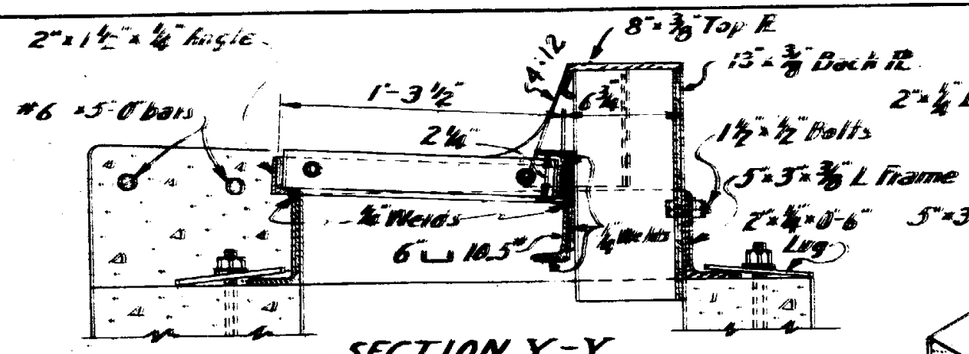

SECTION Y-Y

Scale 1 1/2" = 1'-0"

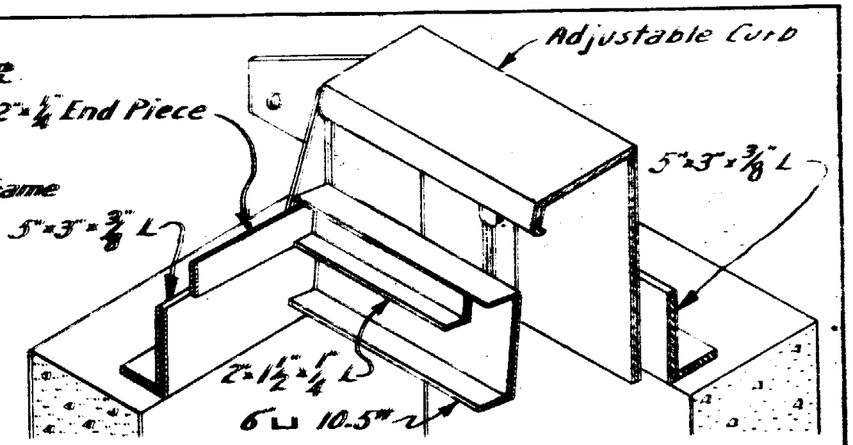

View showing placement of angles, channel and end piece.

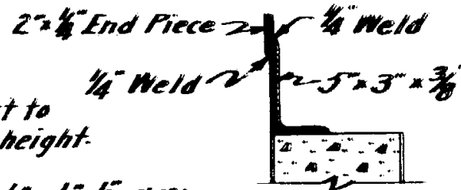

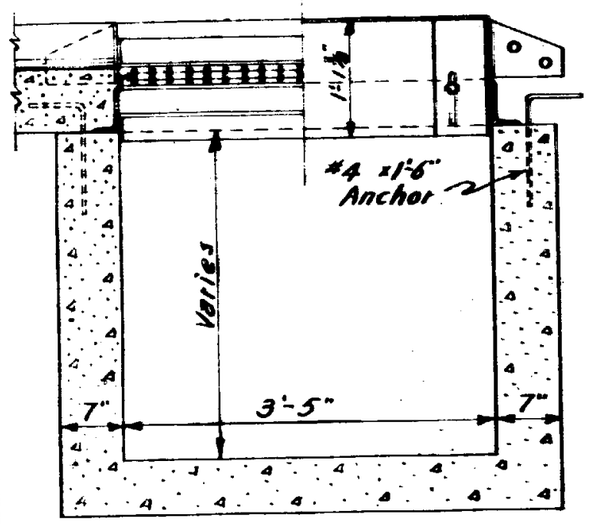

LONGITUDINAL SECTION

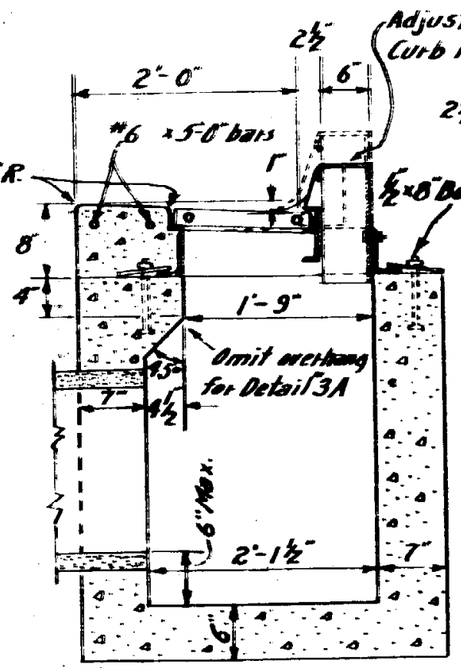

CROSS SECTION

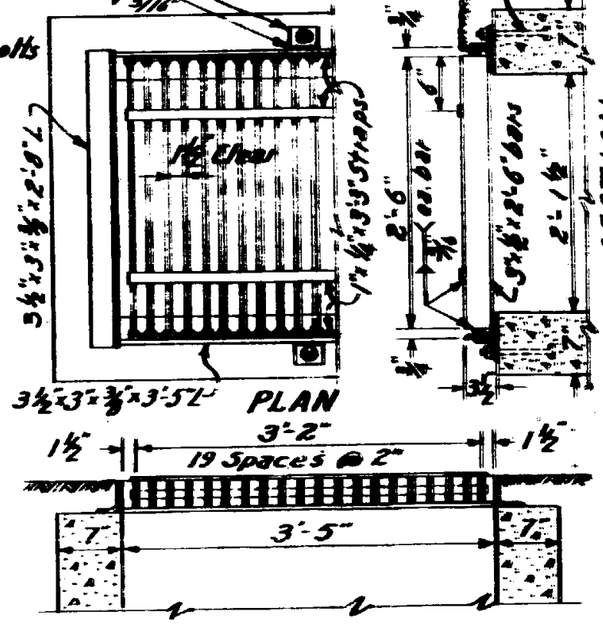

Warp face of Standard curb and gutter into catch basin in lengths of 2 feet on each side if necessary.

Adjustable curb, frame and grating units shall be structural steel A.S.T.M. A-7 painted one shop coat of No 1 paint and one field coat of No. 3 paint.

All concrete to be class "A".

Area of grate opening for Detail #3 = 3.66 □', for Detail 3A = 7.26 □'. Area of curb opening Min = 0.70 □' Max. = 1.85 □'

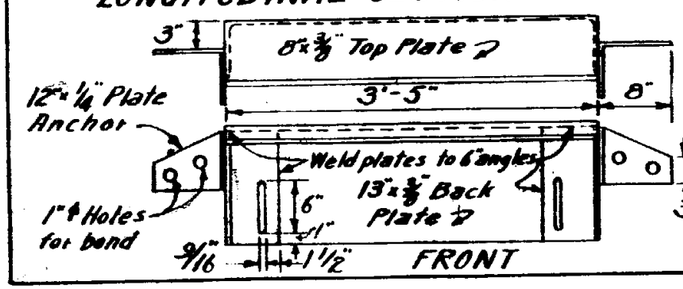

TOP

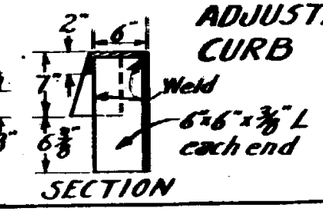

DETAIL OF ADJUSTABLE CURB

SECTION DETAIL 3A

Welded frame and bar grate unit for use without curb. Concrete box ϕ as shown for DETAIL #3.

THIS DETAIL SUPERSEDES DRAWING NO. C-27

ARIZONA HIGHWAY DEPARTMENT

PLANS DIVISION

REV.

CATCH BASIN NO. 3 & 3A

DRAWN	L.O. Moe 3-24-58	DRAWING NO.
TRACED	L.O. Moe 3-24-58	C-27-1
CHECKED	12-1-58	
APPROVED ENGR. PLANS		

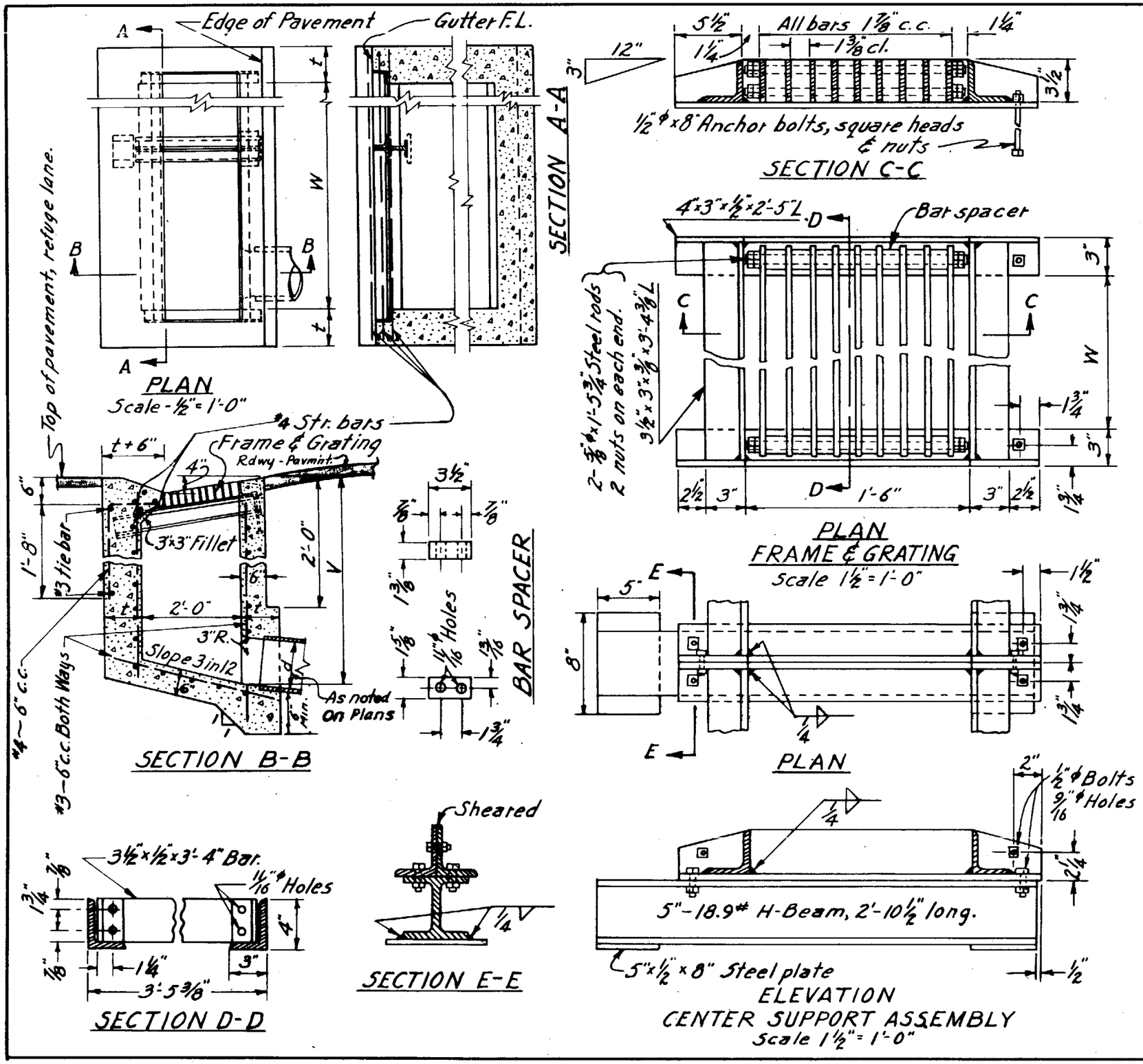

NOTES:

Outlet pipes to be placed in position as shown on plans.

Floor of basin shall be given a steel troweled finish. Slope of floor parallel with curb shall be 1 in 12.

t = 6" if "V" is 4' or less.
t = 8" if "V" is between 4' and 8'
t = 10" if "V" is 8' or over.
V = 3'-6" unless otherwise specified.
W = 2'-11 3/8" for one grating. Add 3'-5 3/8" for each additional grating. Unless otherwise specified the basin shall have one grating.

Center support assembly shall be used when two or more gratings are specified.

Bolts shall be used to join two or more frames together and to the "H" beam.

Frame and grating units shall be structural steel A.S.T.M. A-7 painted one shop coat of No. 1 paint and one field coat of No. 3 paint.

Area of single grate opening = 4.42 □'

All concrete Class A
Reinforcing steel 1 1/2" edge distance except where noted.

ARIZONA HIGHWAY DEPARTMENT PLANS DIVISION		REV. 1/4/60
CATCH BASIN NO. 4		
DRAWN BY	L.J.B. 8-14-57	DRAWING NO.
TRACED BY	L.G. Moe 2-21-58	C-27A
CHECKED BY	J.P.D. 2-21-58	
APPROVED ENGR. OF PLANS	J. Heidecker	

NOTES:

Chamfer all exposed edges 3/4"
This catch basin shall be used for median drains only when called for on plans.
All concrete Class A.

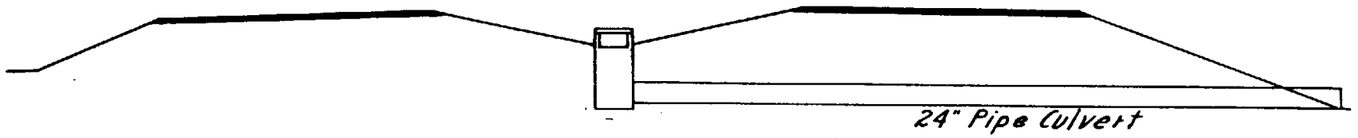

TYPICAL LOCATION

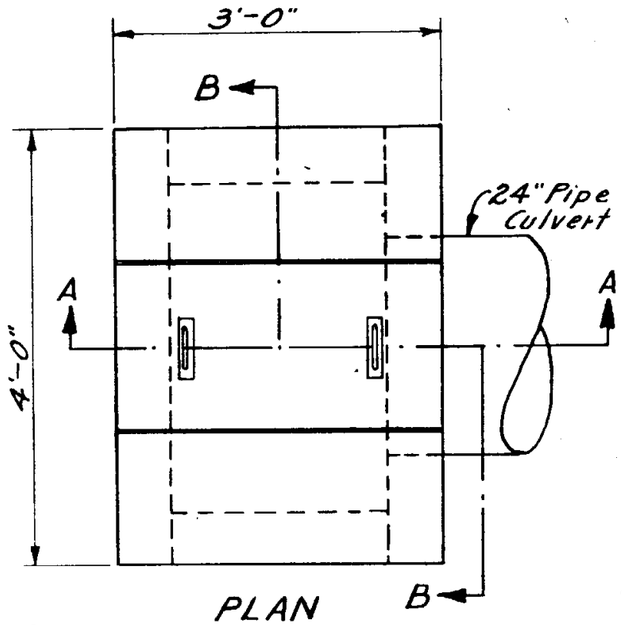

PLAN

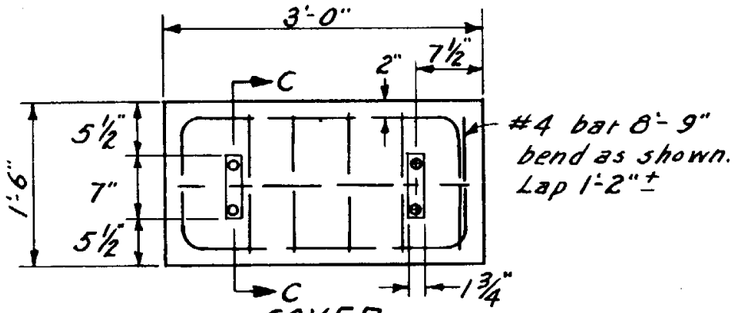

COVER
Approx. Weight 200#

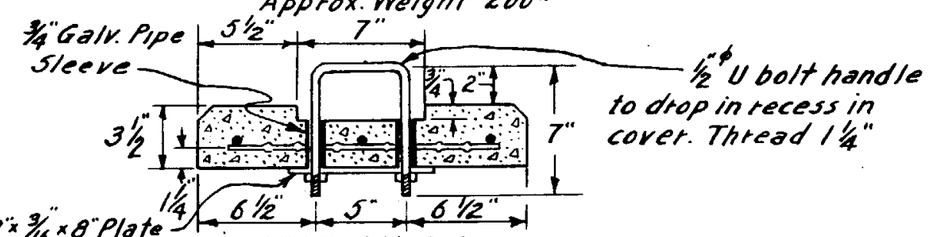

SECTION C-C

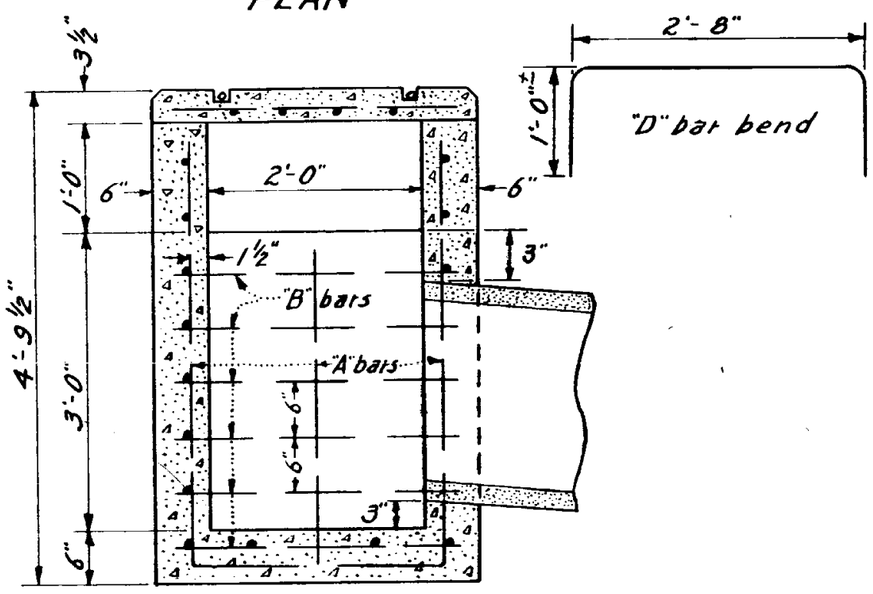

SECTION A-A

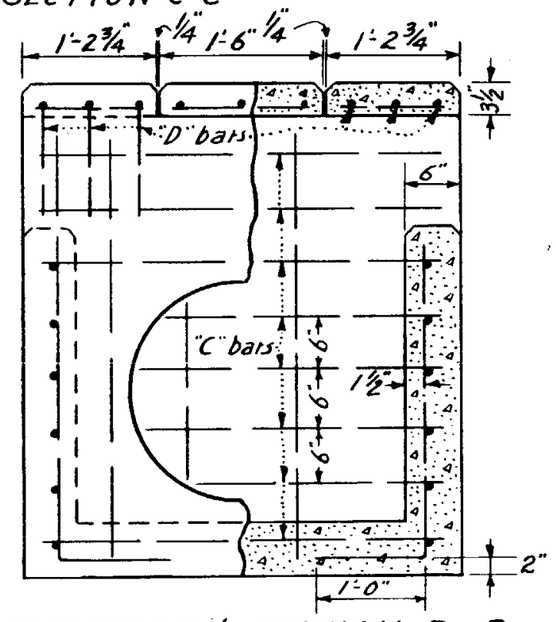

ELEVATION & SECTION B-B

All Bars #4 - 120 lbs.								Concrete - 1.05 C.Y.	
"A" bars		"B" bars		"C" bars		"D" bars		Cover bars	
No.	Length	No.	Length	No.	Length	No.	Length	No.	Length
8	5'-3"	12	2'-9"	14	3'-9"	6	4'-6" bend	1	8'-9" bend
2	4'-3"							4	1'-3"
								1	2'-9"

ARIZONA HIGHWAY DEPARTMENT
PLANS DIVISION

REV. 1/4/60

CATCH BASIN NO. 5

DRAWN	L.O. Moe 2-27-58	DRAWING NO.
TRACED	L.O. Moe 3-3-58	C-27B
CHECKED	12-1-58	
APPROVED ENGR. PLANS	S. Heidecker	

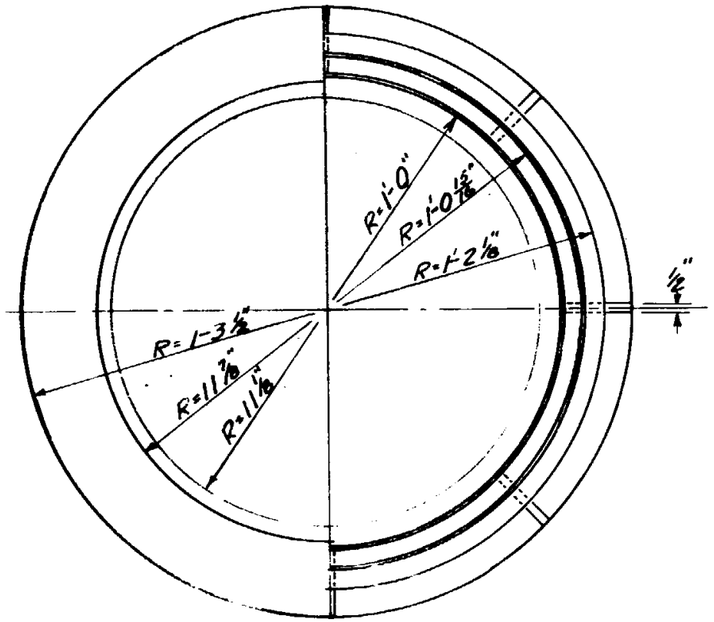

HALF PLAN
BOTTOM OF FRAME

HALF PLAN
TOP OF FRAME

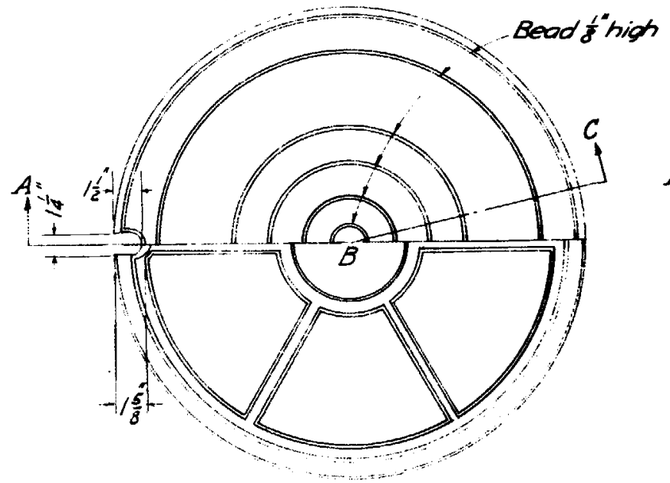

HALF PLAN
TOP OF COVER

HALF PLAN
BOTTOM OF COVER

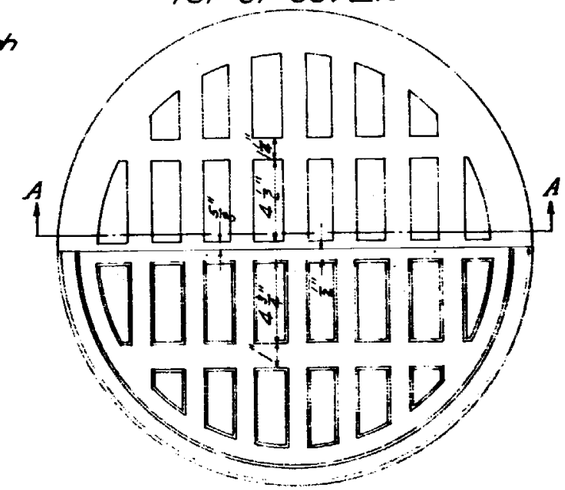

HALF PLAN
TOP OF COVER

HALF PLAN
BOTTOM OF COVER

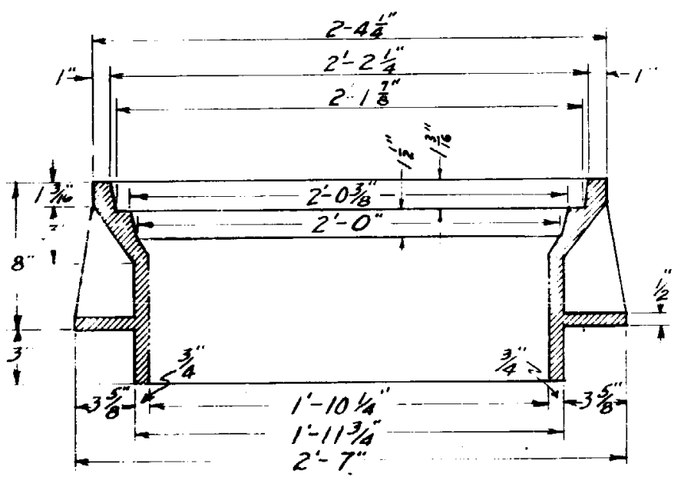

SECTION OF FRAME

Approx. weight 260 lbs.

Scale 1 1/2" = 1'-0"

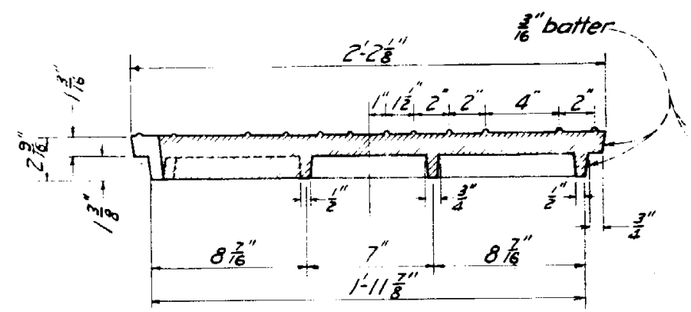

SECTION A-B-C OF COVER

TYPE "A" COVER

Approx. weight 190 lbs.

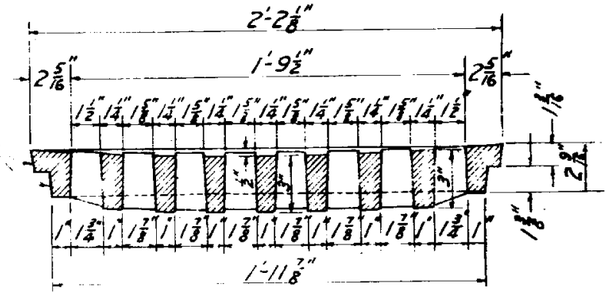

SECTION A-A OF COVER

TYPE "B" COVER

Approx. weight 280 lbs.

TYPE "A-1" COVER: shall be the same as Type "A" except that the cover shall be vented with at least six one inch holes, equally spaced in a circle 8 1/2" from the center of the cover.

Type "A" cover shall be used unless otherwise specified.

Notations as shown on the plans shall be as follows: Std. M.H. Frame & Cover No. B, the letter denoting the type of cover.

The bearing faces shall be machined so that the cover will have a uniform bearing in any position in the frame.

ARIZONA HIGHWAY DEPARTMENT

PLANS DIVISION

CASTIRON FRAME & COVERS FOR MANHOLES

DRAWN	QK	Oct. 1935
TRACED	QK	" "
CHECKED	L.M	" "
APPROVED ENG. OF PLANS		

DRAWING NO. C-28

REV.

GENERAL NOTES

Pipe for precast sections as per Standard Specs. All other concrete shall be Class "A".

Every 5th course of bricks shall be laid as stretchers.

Manhole frame and cover Std. C-28 is shown. Other types may be substituted if noted on plans.

In bituminous pavement, manhole frame and concrete ring shall be placed after pavement is laid.

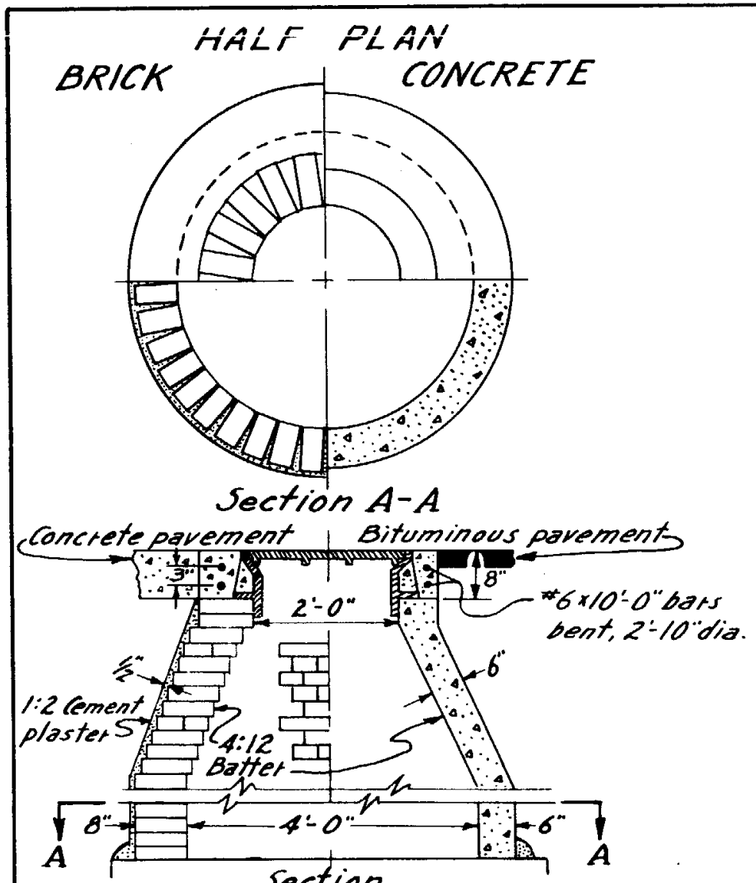

BRICK MANHOLE NO.1 — CONCRETE MANHOLE NO.2

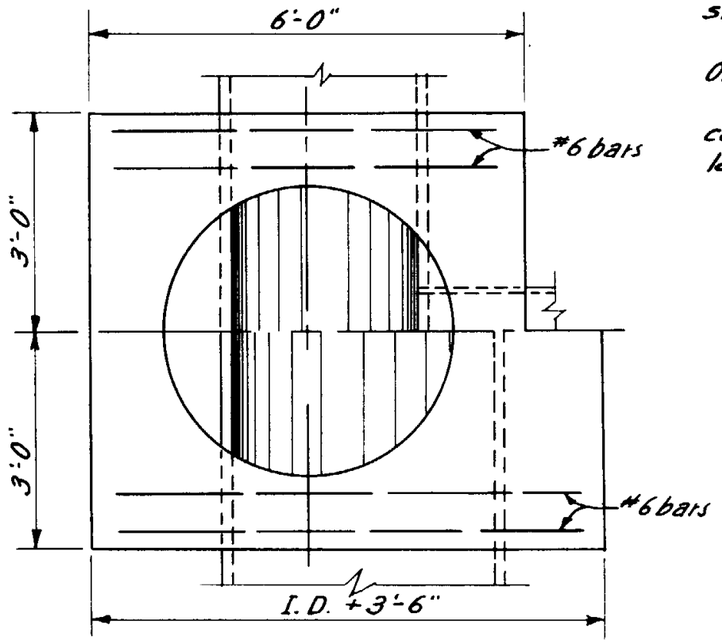

HALF PLAN - PIPES OVER 36" I.D.

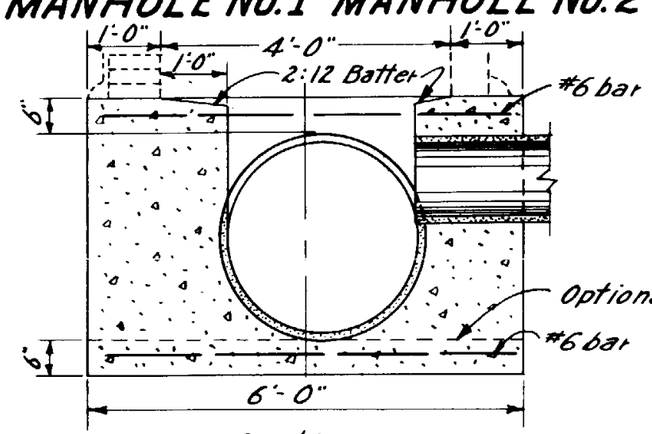

STANDARD BASE STRUCTURE
FOR PIPES 6" TO 36" I.D.

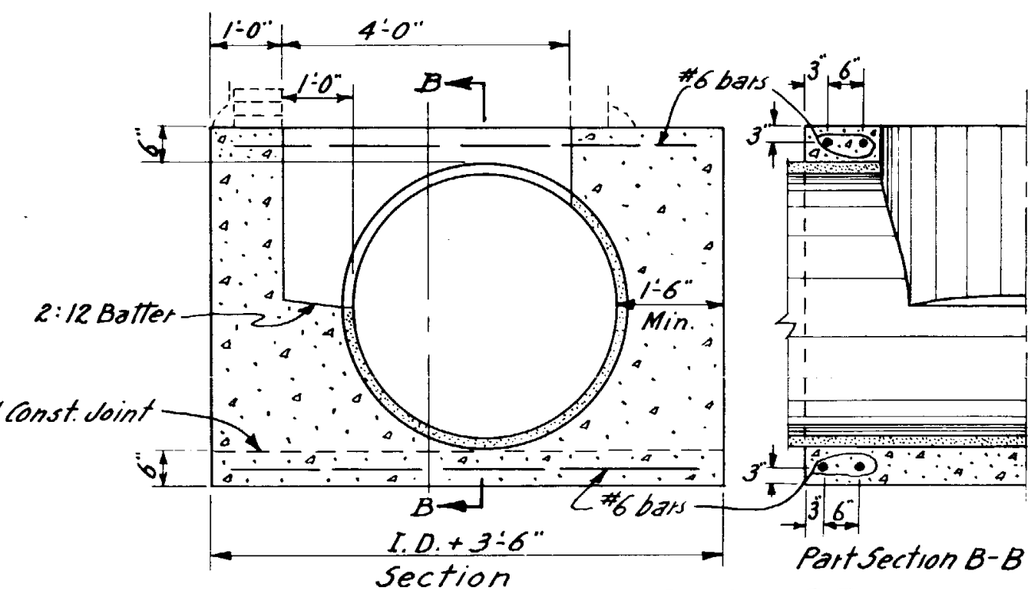

STANDARD BASE STRUCTURE
FOR PIPES OVER 36" I.D.

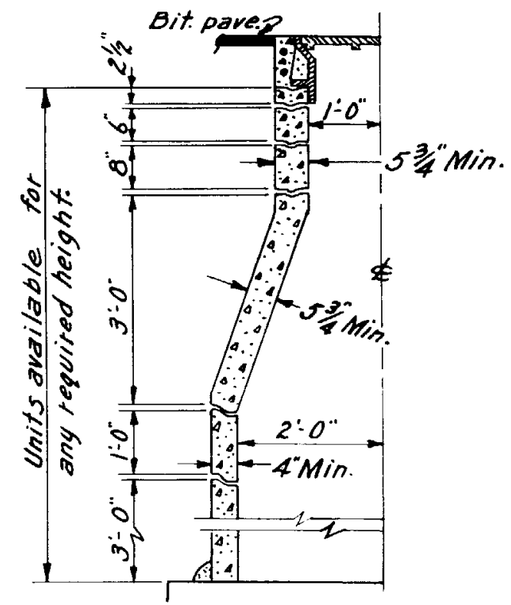

HALF SECTION
MANHOLE NO. 3
PRECAST REINFORCED CONCRETE

THIS DRAWING SUPERSEDES STD. C-30

ARIZONA HIGHWAY DEPARTMENT
PLANS DIVISION

REV. 1/4/60

MANHOLE BASE STRUCTURE AND MANHOLES NO. 1, 2 & 3

DRAWN	R.E.W. March 1958	DRAWING NO.
TRACED	L.D. Moe 5-26-58	C-30-1
CHECKED	12-1-58	
APPROVED ENGR. PLANS		

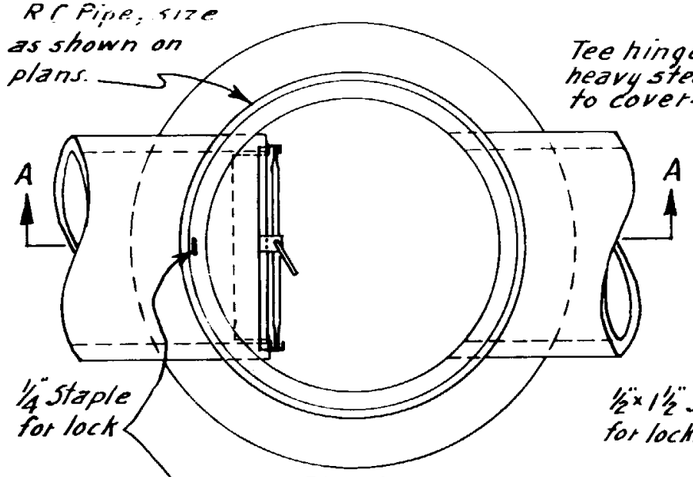

PLAN

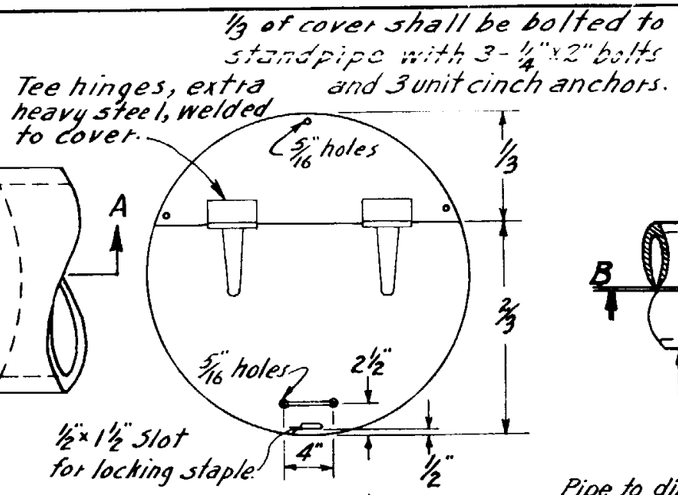

COVER FOR NO. 1 STANDPIPE

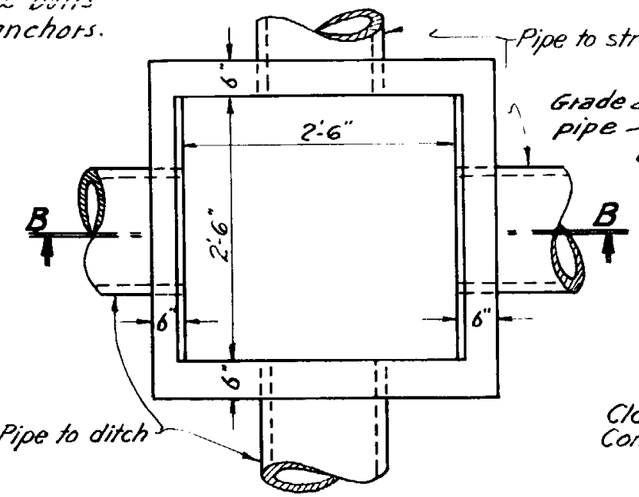

PLAN
STANDARD IRRIGATION STANDPIPE NO. 2

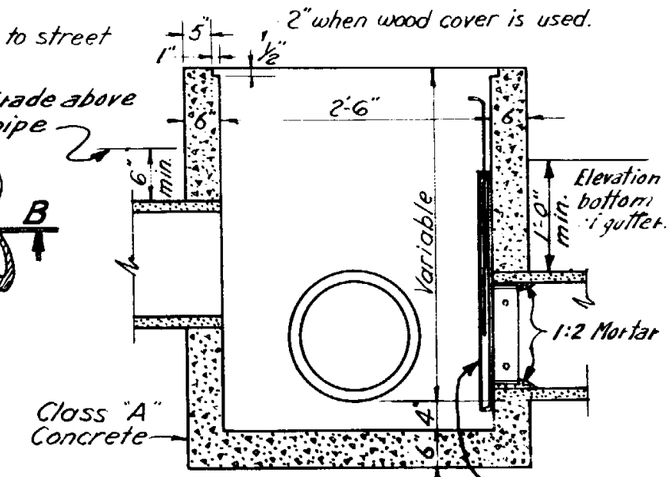

SECTION B-B

Gate as per Std. C-32 Detail A

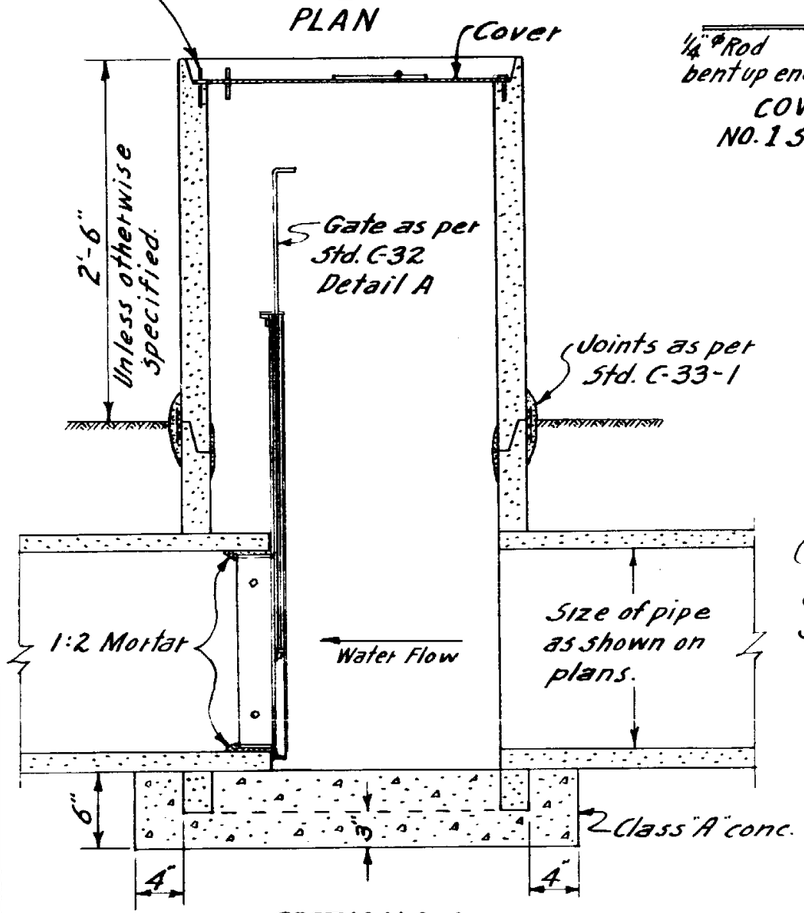

SECTION A-A
STANDARD IRRIGATION STANDPIPE NO. 1

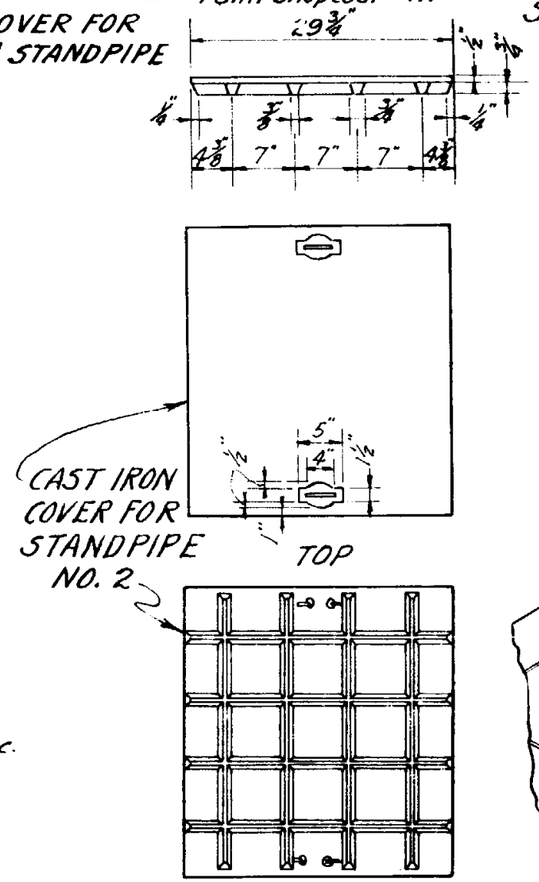

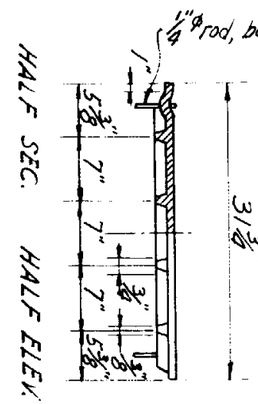

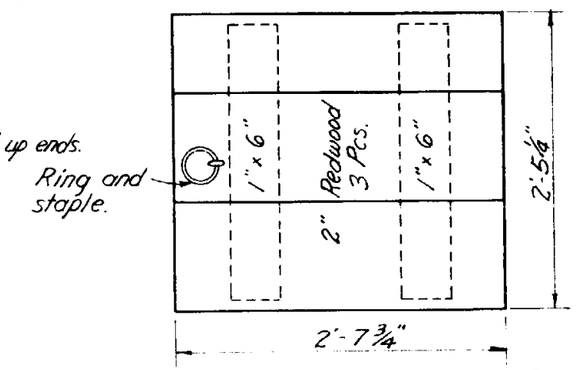

PLAN OF REDWOOD COVER FOR STANDPIPE NO. 2

Locked Redwood cover may be used when top of standpipe is above grade.

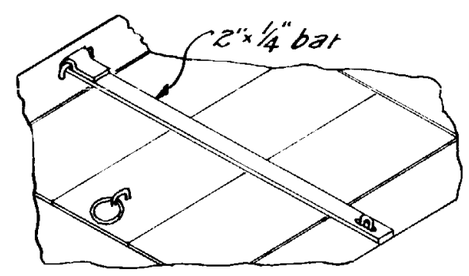

Method of locking wood covers.

ARIZONA HIGHWAY DEPARTMENT
PLANS DIVISION

IRRIGATION STANDPIPE NO. 1 AND NO. 2

DRAWN		
TRACED	GH	DEC. 1945
CHECKED	HHW	
APPROVED		
PLANS ENG'R.	[illegible]	

DRAWING NO. C-31

REV. 12-[illegible]-58

Note: Gates will be specified on plans for pipes larger than 24".

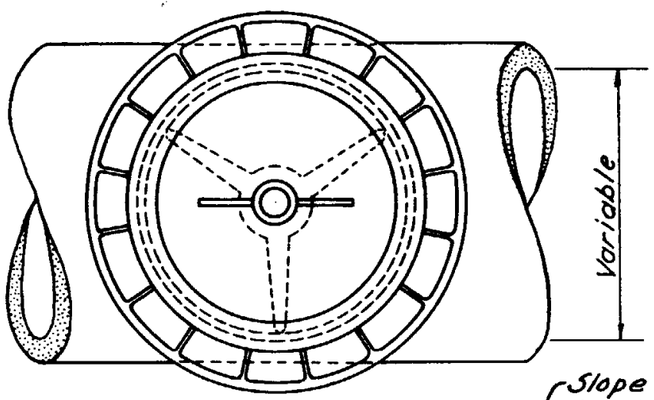

PLAN

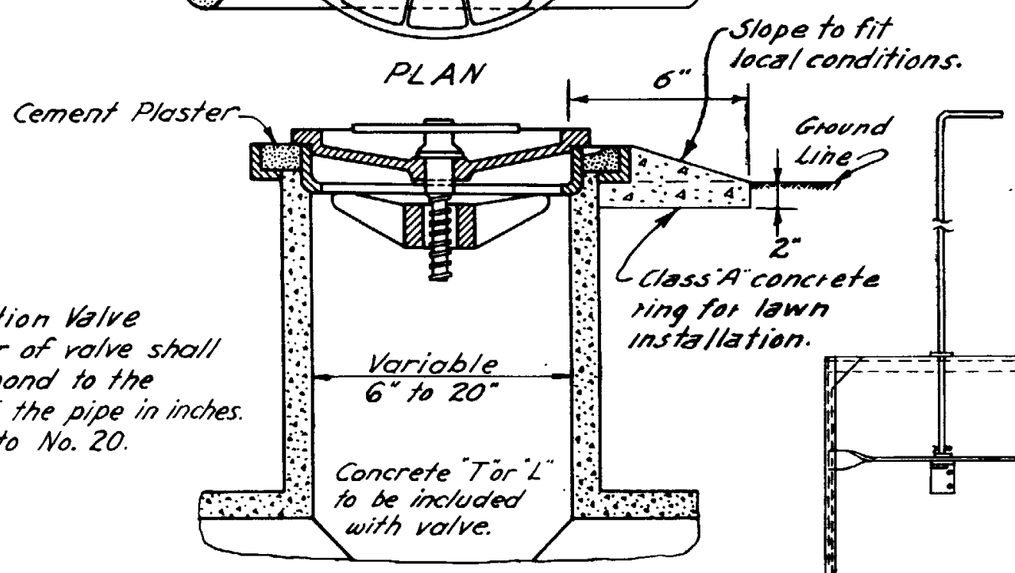

PART SECTION

STANDARD IRRIGATION VALVE
DETAIL "C"

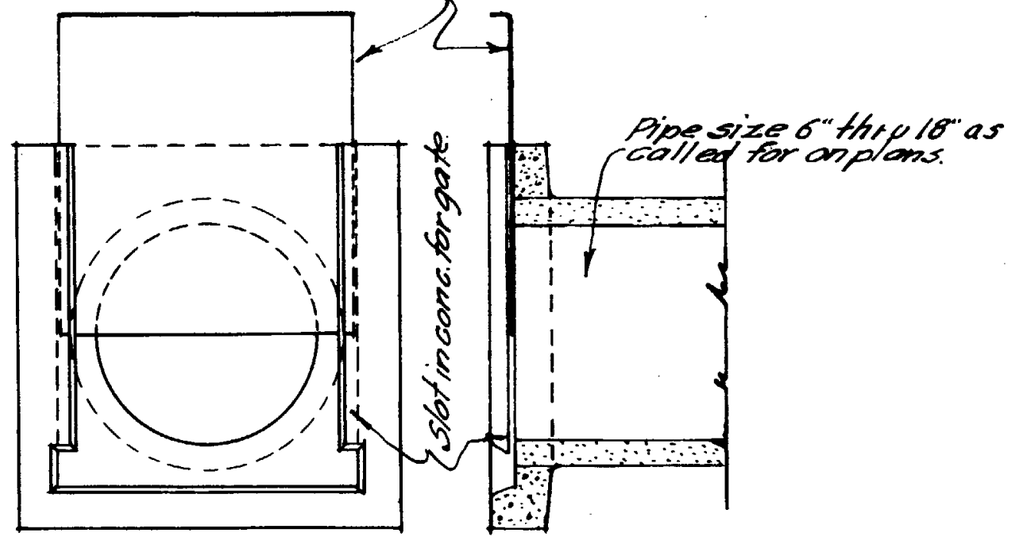

ELEVATION SECTION

PRECAST IRRIGATION GATE
For open ditch installation.
DETAIL "B"

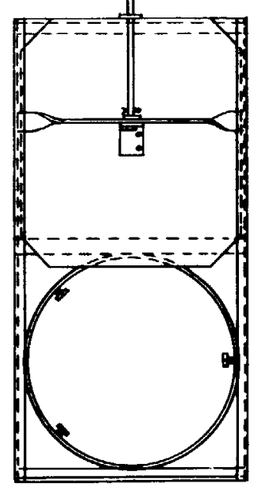

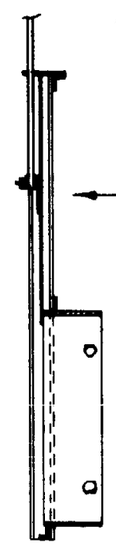

Detail "A"
For pipes 6" thru 24". Gate and frame shall be G. I. or aluminum. Type shown is for concrete pipe. For C.M.P., external steel adjustable band shall be used in place of internal steel ring.

PLAN SECTION
STANDARD IRRIGATION GATE
for standpipe installation.
DETAIL "A"

ARIZONA HIGHWAY DEPARTMENT PLANS DIVISION		REV. 8/17/55 12/1/58 1/4/60
IRRIGATION VALVE IRRIGATION GATE		
DRAWN	O.K. Dec. 1935	DRAWING NO.
TRACED	GH Nov. 1945	C-32
CHECKED	HHW	
APPROVED PLANS ENGR.	HH Wessel	

TYPICAL INSTALLATION PLAN OF ROAD GUARD AT BRIDGE APPROACHES

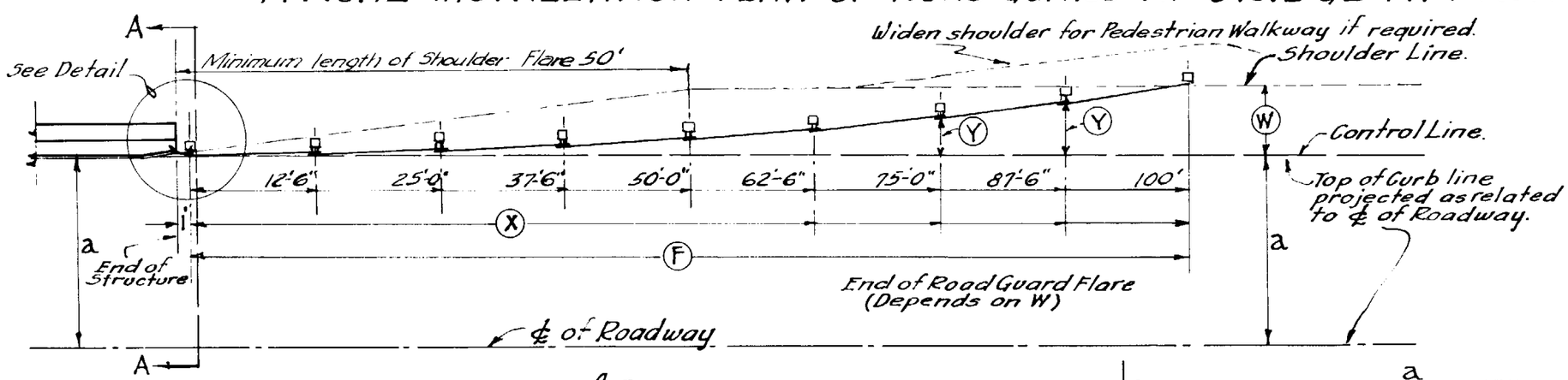

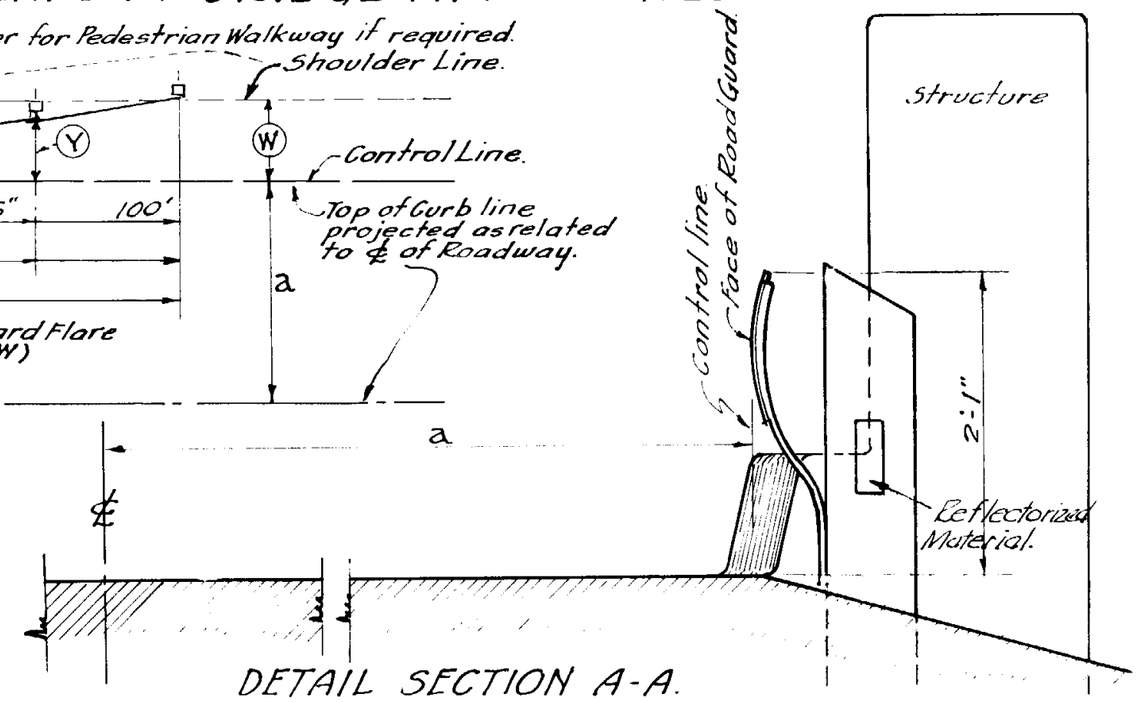

DETAIL SECTION A-A.

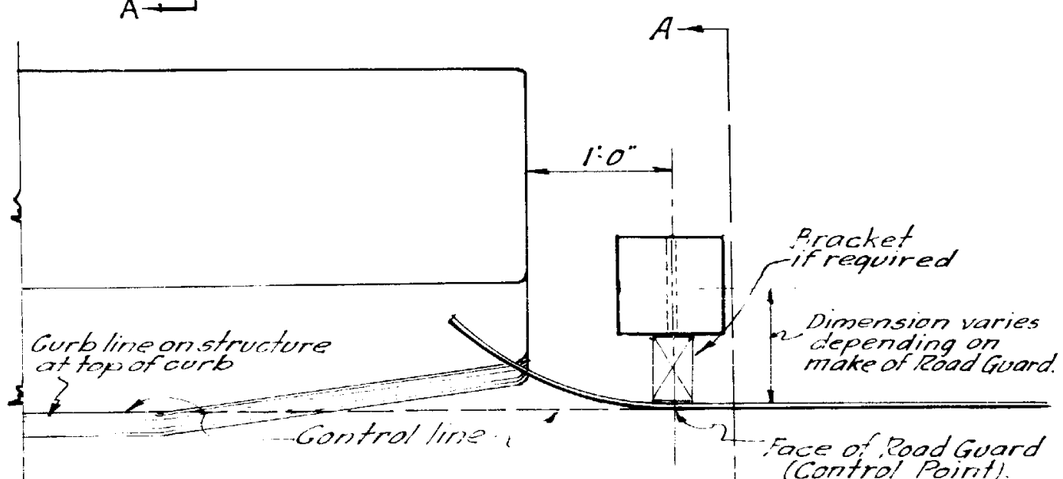

DETAIL PLAN
AT END OF STRUCTURE

Basic formula for Road Guard Flare

$$Y = W \frac{X^2}{F^2}$$

- W = Offset from top of Curb line (Control line) to shoulder line.
- F = Length of Road Guard flare.
- X = Distance from beginning post away from structure
- Y = Offset to face of Road Guard at each post.

X	Y					
	W = 3	W = 4	W = 5	W = 6	W = 7	
12'-6"	0.19	0.16	0.14	0.12	0.11	
25'-0"	0.75	0.64	0.55	0.49	0.44	
37'-6"	1.69	1.44	1.25	1.10	0.98	
50'-0"	3.00	2.56	2.22	1.96	1.75	
62'-6"		4.00	3.47	3.06	2.73	
75'-0"			5.00	4.41	3.93	
87'-6"				6.00	5.36	
100'					7.00	
	F = 50'	F = 62'-6"	F = 75'-0"	F = 87'-6"	F = 100'	

GENERAL NOTES :–

When value of "W" is different than shown in Table, then use Basic formula to find values for Y.

When Road Guard is to be continued beyond end of Road Guard Flare required for "W" offset, the face of Road Guard shall then be continued at the shoulder line, modify last offset to avoid kink.

When "W" = 0, no flare is required. Shoulder line is then the control line.

Offset from Roadway ℄ = Y + a – All figures are expressed in feet.

Place Road Guard both sides of roadway.

Reference Drawing C-7-1

ARIZONA HIGHWAY DEPARTMENT
PLANS DIVISION

REV. 3/17/50 12/1/58

INSTALLATION OF ROAD GUARD AT STRUCTURE APPROACHES

DRAWN	L. McDougall 1/10/49	DRAWING NO.
TRACED	K. Stokes 1/12/49	C-42
CHECKED	L. McDougall 1/20/49	
APPROVED ENG'R PLANS	H.H. Wessel 1/20/49	

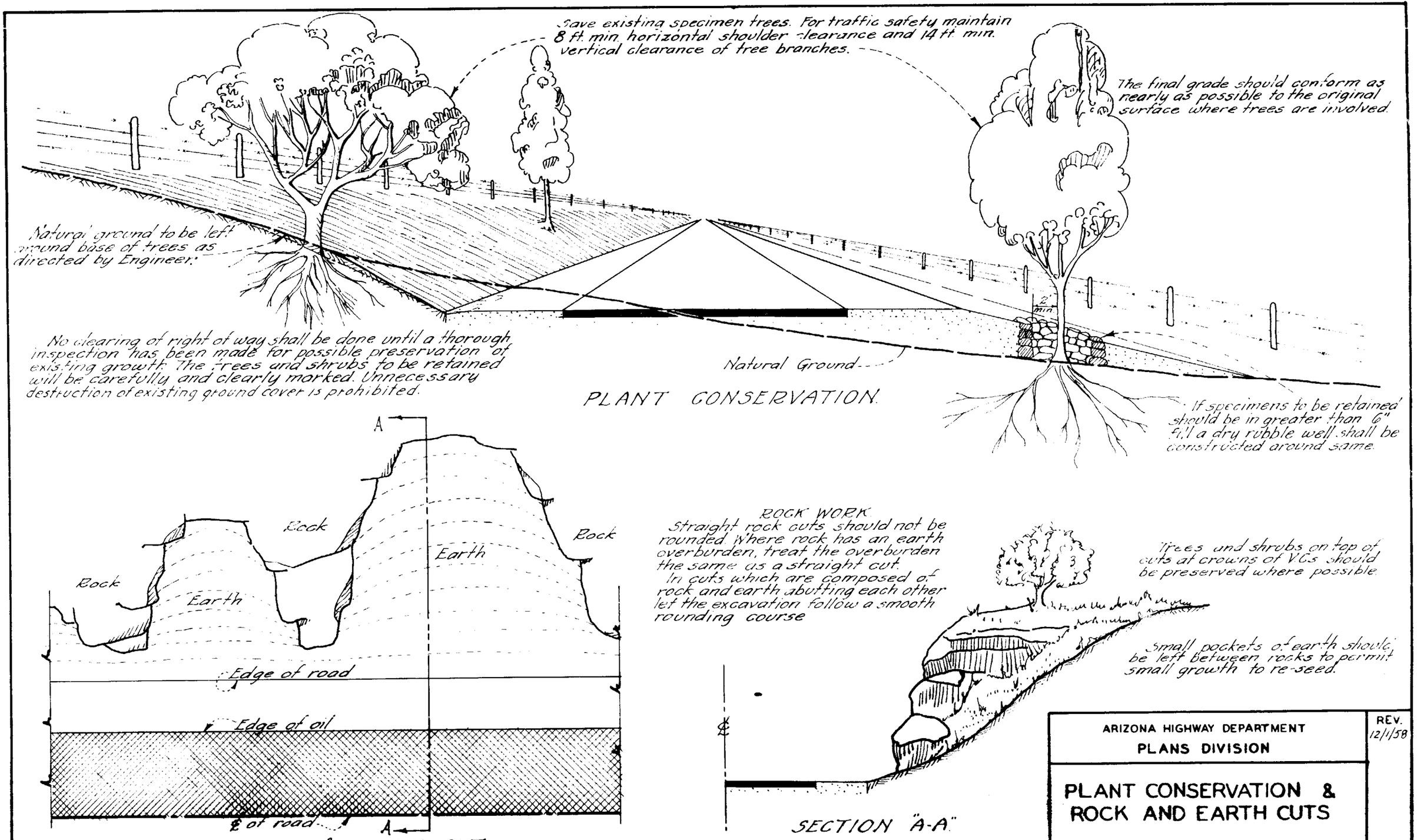

ARIZONA HIGHWAY DEPARTMENT
PLANS DIVISION

REV. 12/1/58

PLANT CONSERVATION & ROCK AND EARTH CUTS

DRAWN	W.M.D. JAN., 1936	DRAWING NO.
TRACED	K.S. JUNE, 1938	C-41
CHECKED	H.H.W. July, 1938	
APPROVED ENGR. PLANS	HH Wessel	

CUMULATIVE PERCENT OF CROWN "C" FOR EACH FOOT RIGHT OR LEFT OF ℄

W = FULL WIDTH OF ROADWAY - FEET \ P →	1'	2'	3'	4'	5'	6'	7'	8'	9'	10'	11'	12'	13'	14'	15'	16'	17'	18'	19'	20'	21'	22'	23'	24'	25'	26'	27'	28'	29'	30'	31'	32'	33'	34'	35'	36'	37'	38'	39'	40'	41	42'	43'	44'	45'
90	0.05	0.20	0.44	0.79	1.23	1.78	2.42	3.16	4.00	4.94	5.98	7.11	8.35	9.68	11.11	12.64	14.27	16.00	17.83	19.75	21.78	23.90	26.12	28.44	30.86	33.38	36.00	38.72	41.53	44.44	47.46	50.57	53.78	57.09	60.49	64.00	67.61	71.31	75.11	79.01	83.01	87.11	91.31	95.61	C
88	0.05	0.21	0.46	0.83	1.29	1.86	2.53	3.31	4.18	5.17	6.25	7.44	8.73	10.12	11.62	13.22	14.93	16.74	18.65	20.66	22.78	25.00	27.32	29.75	32.28	34.92	37.66	40.50	43.44	46.49	49.64	52.89	56.25	59.71	63.27	66.94	70.71	74.59	78.56	82.64	86.83	91.12	95.51	C	
86	0.05	0.22	0.49	0.87	1.35	1.95	2.65	3.46	4.38	5.41	6.54	7.79	9.14	10.60	12.17	13.85	15.63	17.52	19.52	21.63	23.85	26.18	28.61	31.15	33.80	36.56	39.43	42.40	45.48	48.67	51.97	55.38	58.90	62.52	66.25	70.09	74.02	78.10	82.26	86.53	90.91	95.40	C		
84	0.06	0.23	0.51	0.91	1.42	2.04	2.78	3.63	4.59	5.67	6.86	8.16	9.58	11.11	12.76	14.51	16.38	18.37	20.46	22.68	25.00	27.44	29.99	32.65	35.43	38.32	41.32	44.44	47.68	51.02	54.48	58.05	61.73	65.53	69.44	73.47	77.61	81.86	86.22	90.70	95.29	C			
82	0.06	0.24	0.54	0.95	1.49	2.14	2.91	3.81	4.82	5.95	7.20	8.57	10.05	11.66	13.38	15.23	17.19	19.27	21.48	23.80	26.23	28.79	31.47	34.27	37.18	40.21	43.37	46.64	50.03	53.54	57.17	60.92	64.78	68.77	72.87	77.10	81.42	85.90	90.48	95.18	C				
80	0.06	0.25	0.56	1.00	1.56	2.25	3.06	4.00	5.06	6.25	7.56	9.00	10.56	12.25	14.06	16.00	18.06	20.25	22.56	25.00	27.56	30.25	33.06	36.00	39.06	42.25	45.56	49.00	52.56	56.25	60.06	64.00	68.06	72.25	76.56	81.00	85.56	90.25	95.06	C					
78	0.07	0.26	0.59	1.05	1.64	2.37	3.22	4.20	5.33	6.57	7.96	9.47	11.11	12.89	14.79	16.83	19.00	21.30	23.73	26.30	28.99	31.82	34.78	37.87	41.09	44.44	47.93	51.54	55.29	59.17	63.18	67.32	71.60	76.00	80.54	85.21	90.01	94.94	C						
76	0.07	0.28	0.62	1.11	1.73	2.49	3.39	4.43	5.61	6.93	8.38	9.97	11.70	13.57	15.58	17.73	20.01	22.44	25.00	27.70	30.54	33.52	36.63	39.89	43.28	46.81	50.48	54.29	58.24	62.33	66.55	70.91	75.42	80.06	84.83	89.75	94.81	C							
74	0.07	0.29	0.66	1.17	1.83	2.63	3.58	4.67	5.92	7.30	8.83	10.52	12.34	14.32	16.44	18.70	21.11	23.67	26.37	29.22	32.21	35.35	38.64	42.07	45.65	49.38	53.25	57.27	61.43	65.74	70.20	74.80	79.55	84.44	89.48	94.67	C								
72	0.08	0.31	0.69	1.23	1.93	2.78	3.78	4.94	6.25	7.72	9.34	11.11	13.04	15.12	17.36	19.75	22.30	25.00	27.85	30.86	34.03	37.35	40.82	44.44	48.23	52.16	56.25	60.49	64.89	69.44	74.15	79.01	84.02	89.20	94.52	C									
70	0.08	0.33	0.73	1.31	2.04	2.94	4.00	5.22	6.61	8.16	9.88	11.76	13.80	16.00	18.37	20.90	23.59	26.45	29.47	32.65	36.00	39.51	43.18	47.02	51.02	55.18	59.51	64.00	68.65	73.47	78.45	83.59	88.90	94.37	C										
68	0.09	0.35	0.78	1.38	2.16	3.11	4.24	5.54	7.01	8.65	10.47	12.46	14.62	16.95	19.46	22.15	25.00	28.03	31.23	34.60	38.15	41.87	45.76	49.83	54.07	58.48	63.06	67.82	72.75	77.85	83.13	88.58	94.20	C											
66	0.09	0.37	0.83	1.47	2.29	3.30	4.50	5.87	7.43	9.18	11.10	13.21	15.51	17.99	20.65	23.49	26.52	29.73	33.13	36.71	40.47	44.41	48.54	52.86	57.35	62.03	66.90	71.94	77.17	82.59	88.18	93.97	C												
64	0.10	0.39	0.88	1.56	2.44	3.52	4.79	6.25	7.91	9.77	11.82	14.06	16.50	19.14	21.97	25.00	28.22	31.64	35.25	39.06	43.07	47.27	51.66	56.25	61.04	66.02	71.19	76.56	82.13	87.89	93.85	C													
62	0.10	0.42	0.94	1.66	2.60	3.75	5.10	6.66	8.43	10.41	12.59	14.98	17.59	20.40	23.41	26.64	30.07	33.71	37.56	41.62	45.89	50.36	55.05	59.94	65.04	70.34	75.86	81.58	87.51	93.65	C														
60	0.11	0.44	1.00	1.78	2.78	4.00	5.44	7.11	9.00	11.11	13.44	16.00	18.78	21.78	25.00	28.44	32.11	36.00	40.11	44.44	49.00	53.78	58.78	64.00	69.44	75.11	81.00	87.11	93.44	C															
58	0.12	0.48	1.07	1.90	2.97	4.28	5.83	7.61	9.63	11.89	14.39	17.12	20.10	23.31	26.75	30.44	34.36	38.52	42.93	47.56	52.44	57.55	62.90	68.49	74.32	80.38	86.68	93.22	C																
56	0.13	0.51	1.15	2.04	3.19	4.59	6.25	8.16	10.33	12.76	15.43	18.37	21.56	25.00	28.70	32.65	36.86	41.33	46.05	51.02	56.25	61.73	67.47	73.47	79.72	86.22	92.98	C																	
54	0.14	0.55	1.23	2.19	3.43	4.94	6.72	8.78	11.11	13.72	16.60	19.75	23.18	26.89	30.86	35.12	39.64	44.44	49.52	54.87	60.49	66.39	72.57	79.01	85.73	92.73	C																		
52	0.15	0.59	1.33	2.37	3.70	5.33	7.25	9.47	11.98	14.79	17.90	21.30	25.00	28.99	33.28	37.87	42.75	47.93	53.40	59.17	65.24	71.60	78.25	85.21	92.46	C																			
50	0.16	0.64	1.44	2.56	4.00	5.76	7.84	10.24	12.96	16.00	19.36	23.04	27.04	31.36	36.00	40.96	46.24	51.84	57.76	64.00	70.56	77.44	84.64	92.16	C																				
48	0.17	0.69	1.56	2.78	4.34	6.25	8.51	11.11	14.06	17.36	21.01	25.00	29.34	34.03	39.06	44.44	50.17	56.25	62.67	69.44	76.56	84.03	91.84	C																					
46	0.19	0.76	1.70	3.02	4.73	6.81	9.26	12.10	15.31	18.90	22.87	27.22	31.95	37.05	42.53	48.39	54.63	61.25	68.24	75.61	83.36	91.49	C																						
44	0.21	0.83	1.86	3.31	5.17	7.44	10.12	13.22	16.74	20.66	25.00	29.75	34.92	40.50	46.49	52.89	59.71	66.94	74.59	82.64	91.12	C																							
42	0.23	0.91	2.04	3.63	5.67	8.16	11.11	14.51	18.37	22.68	27.44	32.65	38.32	44.44	51.02	58.05	65.53	73.47	81.86	90.70	C																								
40	0.25	1.00	2.25	4.00	6.25	9.00	12.25	16.00	20.25	25.00	30.25	36.00	42.25	49.00	56.25	64.00	72.25	81.00	90.25	C																									
38	0.28	1.11	2.49	4.43	6.93	9.97	13.57	17.73	22.44	27.70	33.52	39.89	46.81	54.29	62.33	70.91	80.06	89.75	C																										
36	0.31	1.23	2.78	4.94	7.72	11.11	15.12	19.75	25.00	30.86	37.35	44.44	52.16	60.49	69.44	79.01	89.20	C																											
34	0.35	1.38	3.11	5.50	8.65	12.46	16.96	22.15	28.03	34.60	41.87	49.83	58.48	67.82	77.85	88.58	C																												
32	0.39	1.56	3.52	6.25	9.77	14.06	19.14	25.00	31.64	39.06	47.27	56.25	66.02	76.56	87.89	C																													
30	0.44	1.78	4.00	7.11	11.11	16.00	21.78	28.44	36.00	44.44	53.78	64.00	75.11	87.11	C																														
28	0.51	2.04	4.59	8.16	12.76	18.37	25.00	32.65	41.33	51.02	61.73	73.47	86.22	C																															
26	0.59	2.37	5.33	9.47	14.79	21.30	28.99	37.87	47.93	59.17	71.60	85.21	C																																
24	0.69	2.78	6.25	11.11	17.36	25.00	34.03	44.44	56.25	69.44	84.03	C																																	
22	0.83	3.31	7.44	13.22	20.66	29.75	40.50	52.89	66.94	82.64	C																																		
20	1.00	4.00	9.00	16.00	25.00	36.00	49.00	64.00	81.00	C																																			
18	1.23	4.94	11.11	19.75	30.86	44.44	60.49	79.01	C																																				
16	1.56	6.25	14.06	25.00	39.06	56.25	76.56	C																																					
14	2.04	8.16	18.37	32.65	51.02	73.47	C																																						
12	2.78	11.11	25.00	44.44	69.44	C																																							

FORMULA

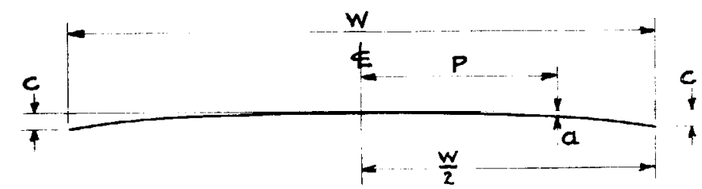

$$\frac{a}{C} = \frac{P^2}{\left(\frac{W}{2}\right)^2} \quad \text{OR} \quad a = \frac{CP^2}{\left(\frac{W}{2}\right)^2}$$

USE OF TABLE

EXAMPLE:

ASSUME W = 40 FT. AND C = 0.45 FT.
FIND a IF P = 8 FT.

TABLE SHOWS a = 16.00% OF C, OR 0.45 x 0.16 = 0.072 FT.

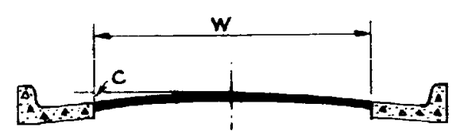

INTERPRETATION OF "W" AND "C"
WHERE CURBS AND GUTTERS ARE USED

ARIZONA STATE HIGHWAY DEPARTMENT
PLANS DIVISION

REV.

PARABOLIC CROWN
FORMULA AND TABLE

CALCULATED AND DRAWN JUNE 1941
BY LESLIE McDOUGALL - HIGHWAY DESIGNER

CHECKED BY

APPROVED BY
ENGINEER OF PLANS

STANDARD DRWG. NO.
C-39

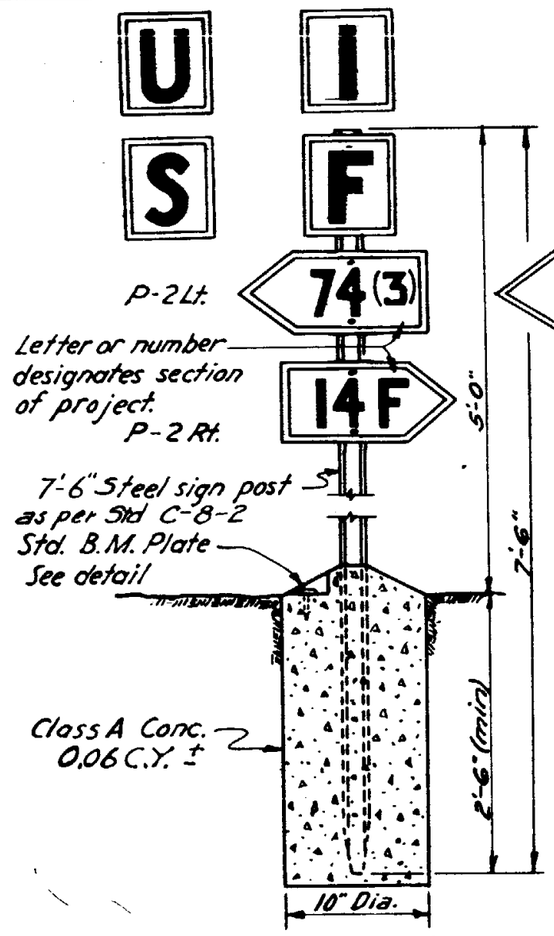

PROJECT MARKER

Project Marker to be furnished by the State and installed and marked by the Engineer at each end of all Federal Aid Projects.

Project Markers shall be placed on R/W line.

Bench Mark to be established by the Engineer on culvert headwalls, bridge curbs, abutment walls, R/W markers F.A. project markers or other permanent structures.

Location and data shall be noted on "As Built" plans.

PLAN
BENCH MARKER

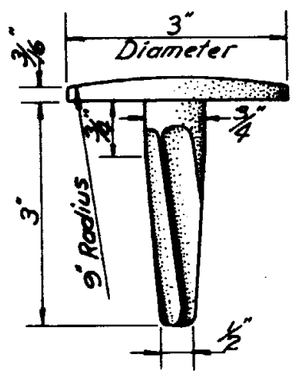

ELEVATION

STD. BENCH MARKER
OR SURVEY MONUMENT MARKER

Markers will be furnished by the State and installed by the Contractor.

Reference transit point shall be punched in cap by the Engineer.

PLAN
SURVEY MONUMENT MARKER

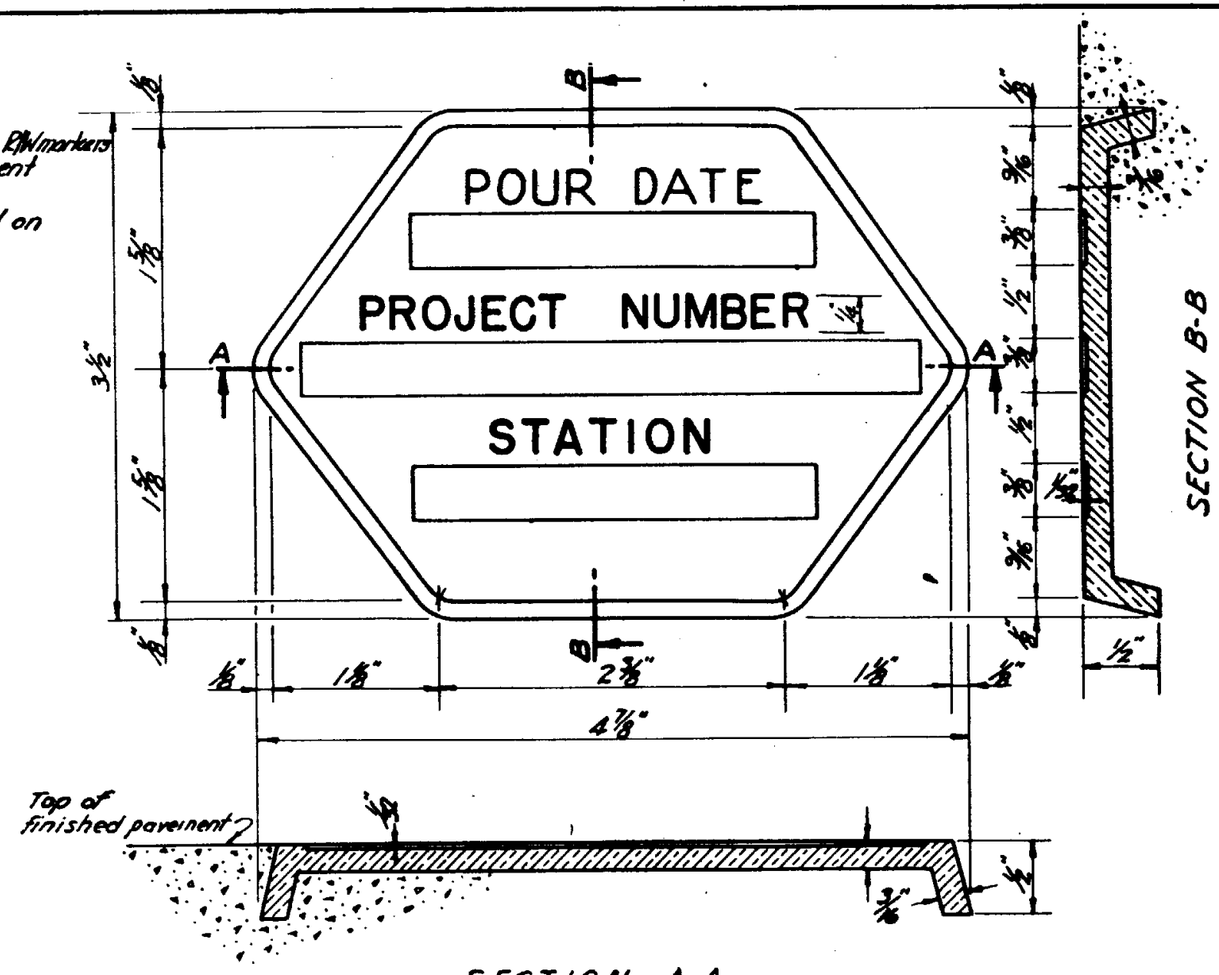

SECTION A-A

CONSTRUCTION MARKER

For concrete pavement.

Scale – Full Size

Marker to be made of brass or bronze, and is to be furnished by the State and placed at beginning and end of each days pour, after marking by the Engineer

ARIZONA HIGHWAY DEPARTMENT PLANS DIVISION		REV. 3-20-50 12/1/58 1/4/60
PROJECT MARKER BENCH MARKER CONSTRUCTION MARKER		
DRAWN		DRAWING NO.
TRACED	GAH Nov. 1945	C-38
CHECKED	HHW	
APPROVED PLANS ENG'R	HH Wessel	

W-32
Advance Warning Sign

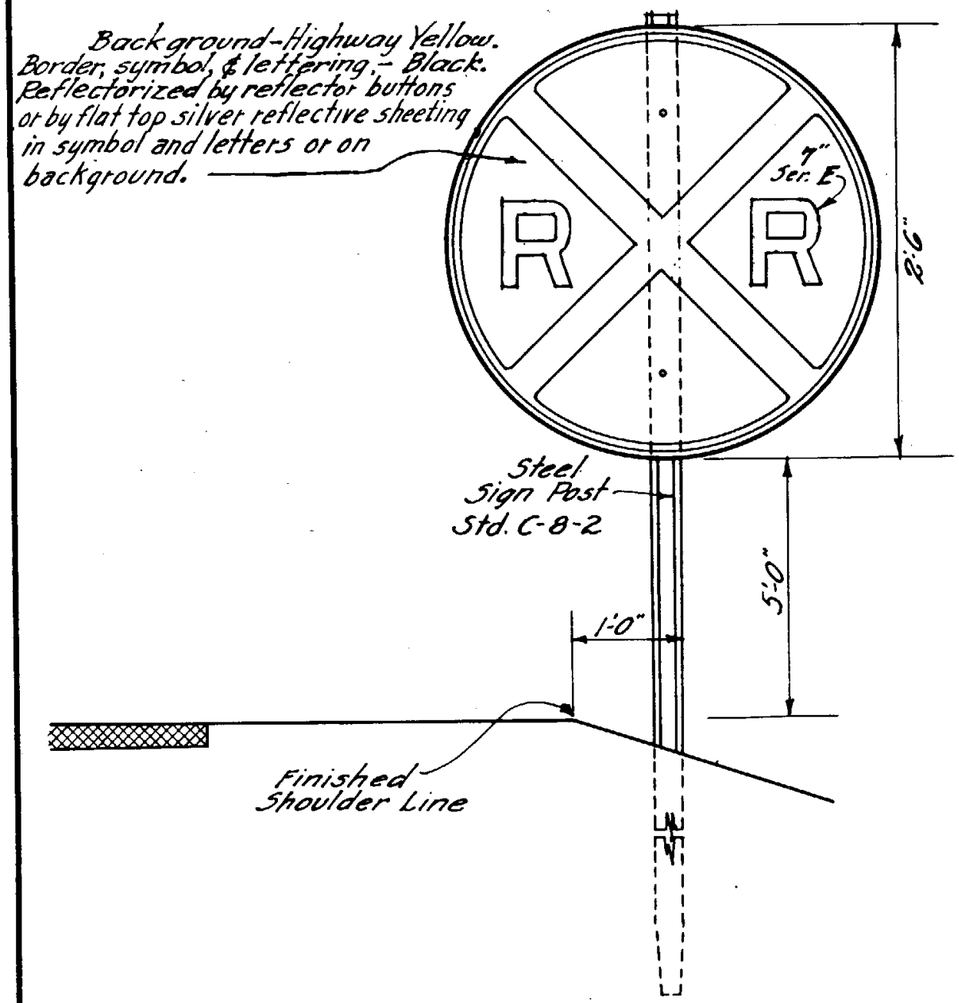

X-1
Railroad Crossing Sign.

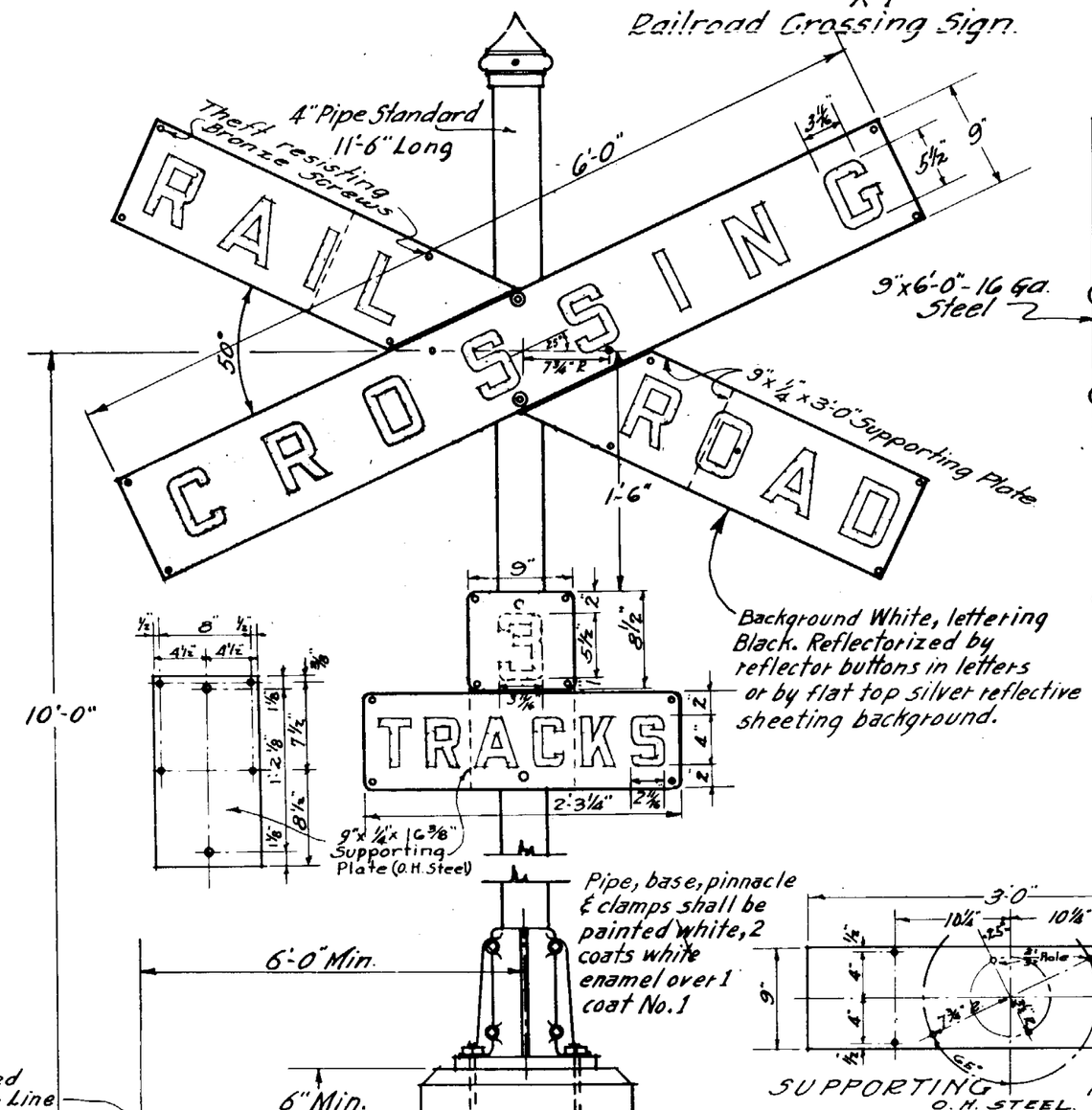

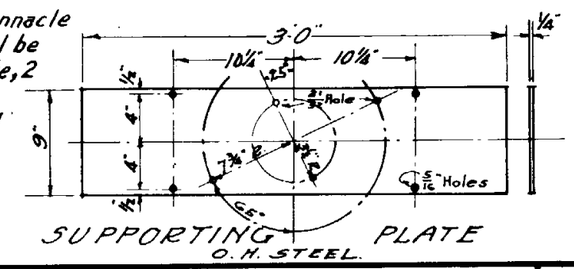

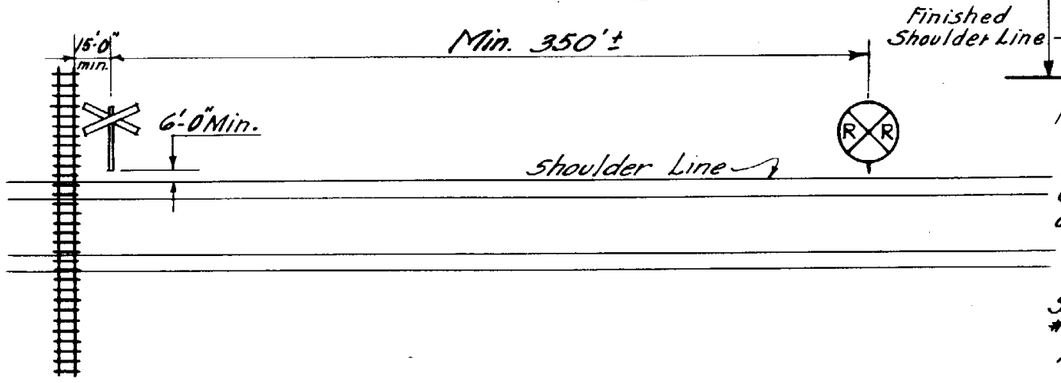

NOTES:

Refer to Bulletin No.5~ Joint Committee on Grade Crossing Protection, Association of American Railroads.

For details not shown on this sheet refer to Signal Section Drawings. No. 1691 or #1653 when flashing light type required.

ARIZONA HIGHWAY DEPARTMENT
PLANS DIVISION

RAILROAD CROSSING SIGNS.

DRAWN BY	H.W. Nov. 1941	DRAWING NO.
TRACED BY	K.S. Nov. 1941.	C-37
CHECKED BY	HHW.	
APPROVED BY Engr. of Plans	HH Wessel	

Rev. 4/47. 4/7/50 12/1/58 1/4/60

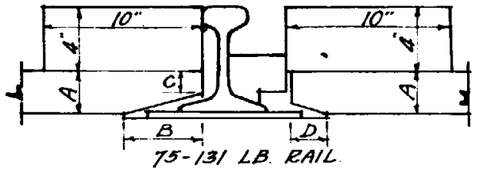

75-131 LB. RAIL

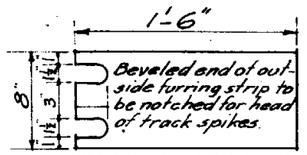

DETAIL OF SPIKE NOTCH.

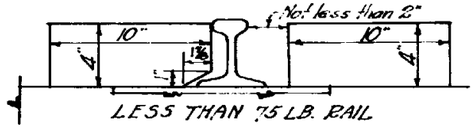

LESS THAN 75 LB. RAIL

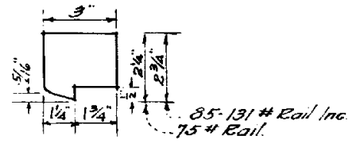

DETAIL OF FLANGEWAY FILLER.

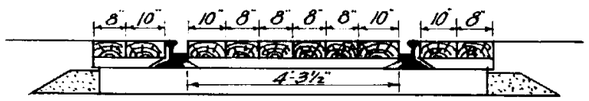

IMPORTANT PUBLIC CROSSINGS
Type C.

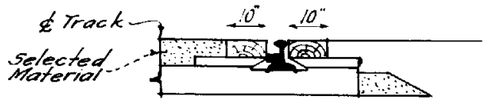

UNIMPORTANT PUBLIC CROSSINGS AND PRIVATE CROSSINGS.
Type D.

SECTION AT END OF CROSSING.

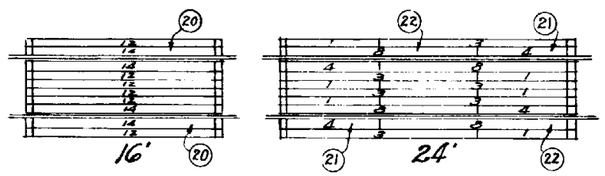

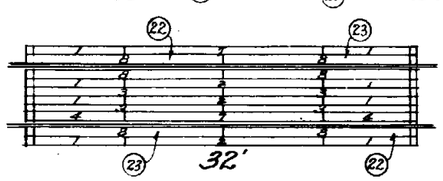

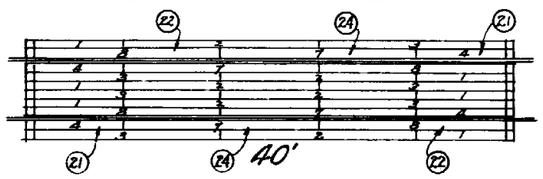

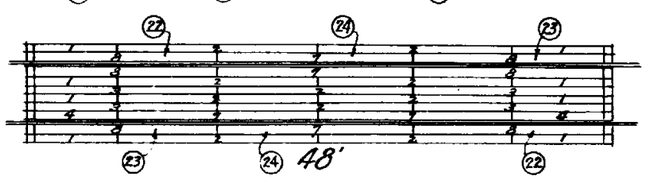

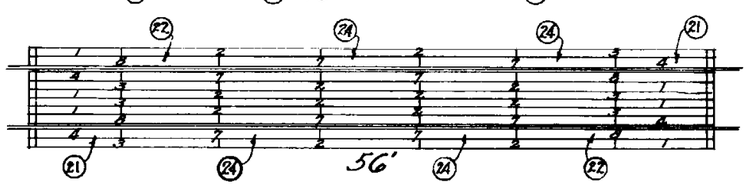

BILL OF MATERIAL — TYPE D

Plank No.	Description	TYPE C IMPORTANT PUBLIC CROSSINGS — 75-131 lb. Rail 16'	24'	32'	40'	48'	56'	Less than 75 lb. Rail 16'	24'	32'	40'	48'	56'	UNIMPORTANT PUBLIC AND PRIVATE CROSSINGS
1	4"x8"x8'-0" one end beveled		6	8	6	8	6		6	8	6	8	6	
2	4"x8"x16'-0"			4	6	10	12			4	6	10	12	
3	4"x8"x16'-0" one end beveled		6	4	6	4	6		6	4	6	4	6	
4	4"x10"x8'-0" " " "		4	2	4	2	4		2	2	2	2	2	
7	4"x10"x16'-0"			1	4	5	8			1	2	3	4	
8	4"x10"x16'-0" one end beveled		4	6	4	6	4		2	2	2	2	2	
12	4"x8"x16'-0" both ends beveled	6						6						
14	4"x10"x16'-0" " " "	4						2						
20	4"x10"x16'-0" " " " base cut							2						
21	4"x10"x8'-0" one end beveled " "								2		2		2	
22	4"x10"x16'-0" " " " " "								2	2	2	2	2	
23	4"x10"x16'-0" " " " " "									2		2		
24	4"x10"x16'-0" base cut										2	2	4	
25	4"x10"x8'-0" both ends beveled													
26	4"x10"x8'-0" both ends beveled base cut													
	Flangeway Fillers - 16'-0" long.	2	3	4	5	6	7							
	Ft. B.M. Planks and Flangeway Filler	601	901	1202	1502	1802	2103	558	837	1116	1395	1674	1955	
	Furring Strips 4'-3½" long	11	16	21	26	31	36							
	" " 1'-6" long	22	32	42	52	62	72							
	20 d Common Nails (31 per lb) No. of lbs.	3	4½	5½	7	8	9½							
*	½"x12" Lag Screws (.68 lb. ea) (90 lb rail) "	88½	143	187	231½	275½	320							
	⅝"x12" Boat Spikes (.53 lb ea) (and over) "	69	111½	146	180½	215	249½							
*	½"x10" lag screws (.54 lb ea) (less than) "	70½	113½	148½	183½	219	254	70½	113½	148½	183½	219	254	
	⅝"x10" boat spikes (.44 lb ea) (90 lb rail) "	57½	92½	121	150	178½	207	57½	92½	121	150	178½	207	
	½" Cut Washers (27 per lb) "	5	8	10½	13	15	17½	5	8	10½	13	15	17½	

* Gimlet Pointed

Type C

IMPORTANT PUBLIC CROSSINGS
FURRING STRIP DIMENSIONS AND FT. B.M. PER CROSSING

	A	B	C	D	16'	24'	32'	40'	48'	56'
75 lb. Rail	5/16"	3"	1/8"	1"	63	91	119	148	176	204
85 " "	1"	4"	1/8"	1"	78	114	149	185	220	255
90 " "	1½"	4"	5/8"	1"	125	182	238	295	352	408
110 " "	2¼"	5"	1"	2"	156	227	298	369	440	510
112 & 130 lb. Rail	2 5/8"	5"	1 3/8"	2"	187	272	357	442	527	612
131 lb. Rail	3 1/8"	5"	1 3/8"	2"	219	318	417	516	615	714

For lengths and number required see "BILL OF MATERIAL".

Type D

UNIMPORTANT PUBLIC CROSSINGS AND PRIVATE CROSSINGS
FURRING STRIP DIMENSIONS & FT. B.M. PER XING.

	A	B	C	D	8'	16'	24'
75 lb. Rail	5/16"	3"	1/8"	1"	26	47	68
85 " "	1"	4"	1/8"	1"	32	59	85
90 " "	1½"	4"	5/8"	1"	51	94	136
110 " "	2¼"	5"	1"	2"	64	117	170
112 & 130 lb. Rail	2 5/8"	5"	1 3/8"	2"	77	141	204
131 lb. Rail	3 1/8"	5"	1 3/8"	2"	90	164	238

For lengths and number required see "BILL OF MATERIAL".

NOTES

Optional with Engineer. — planks may be fastened with lag screws or boat spikes, with or without washers under head of either. All planks shall be double fastened at ends and single fastened, staggered, at intermediate ties. Furring strips to be fastened with 20d nails.
All necessary milling shall be done at treating plant before treatment. Dimensions shown are after seasoning and treatment.
Number of plank to be stamped on each plank, as indicated, at treating plant. Encircled numbers on plan sketches denote base cut planks for rails less than 75 lb.
It is desirable to have the track in good condition before crossings are installed. Use of sawed ties is preferable.
Holes for lag screws, and spikes (boring for boat spikes optional with Engineer) to be bored in the field. ½" diameter for lag screws and ⅝" diameter for boat spikes. Depth of boring for lag screws shall be 8" for 12" lag screws and 6" for 10" lag screws. For boat spikes, holes shall be bored through plank and furring strip only.
Dating nails to be placed in each plank about one foot from south or west end.
Ends of planks must not project past the ties, eliminating the possibility of catching dragging equipement; if necessary, ties must be spaced accordingly.
Planks in crossings having sharp angles of intersection with the track may be stepped to permit economical use, in which case furring should be cut even with edge of plank and remainder used on other end of crossing.
When ordering planked crossings in which standard layout cannot be used a layout sketch fully dimensioned, shall accompany the order so that all planks may be properly milled at treating plant. Sketch shall show the change from switch tie to cross ties so that the proper thickness furring strips may be furnished.
Outside planks for private crossings may be omitted, in which case also omit one-half of furring strips and hardware shown in tables.

For crossings on Southern Pacific Company use S. P. Standard C.S. 576
For crossings on Santa Fe Railway use S. F. Standard C.E.S. 50136-744

ARIZONA HIGHWAY DEPARTMENT
PLANS DIVISION

REV. 12/1/58

STANDARD RAILROAD PLANKED CROSSINGS

DRAWN BY.	W.M.D. JAN. 1936.	DRAWING NO. C-36
TRACED BY.	K.S. JULY 1938.	
CHECKED BY.	H.H.W. JULY 1938	
APPROVED BY Engr. of Plans	H.H. Wessel	

This drawing taken from A.T.&S.F. drawing No. 5658.

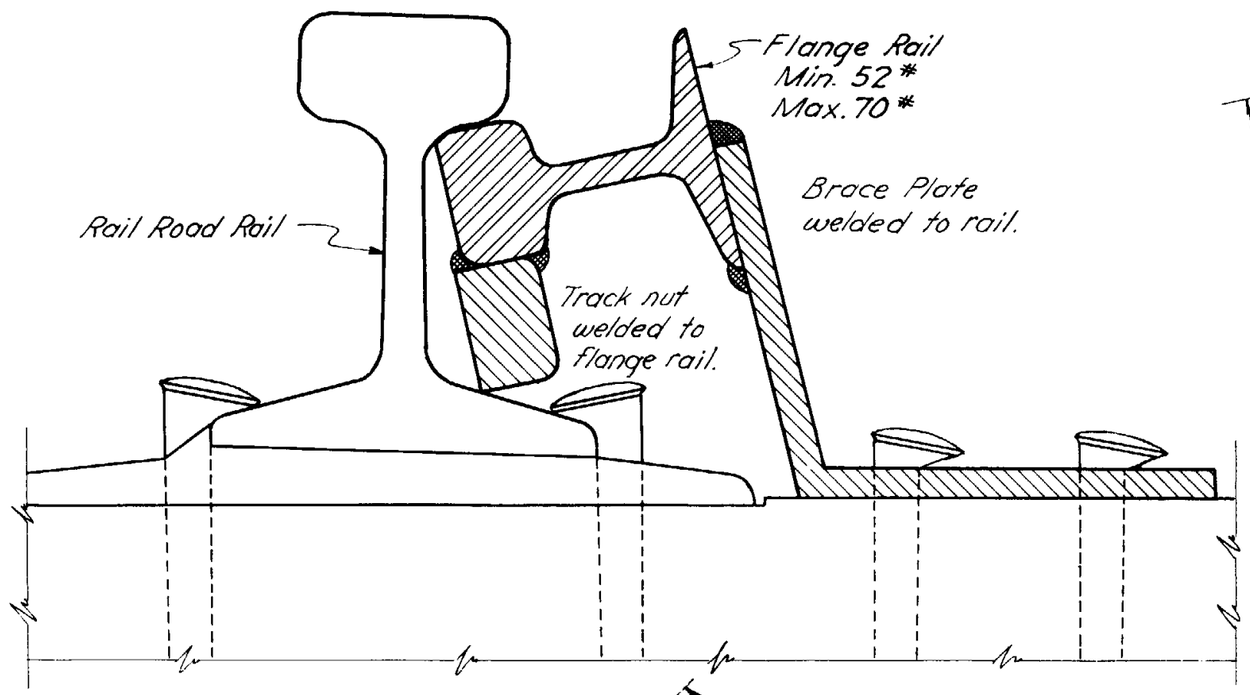

R.R. CROSSING ASSEMBLY DETAILS

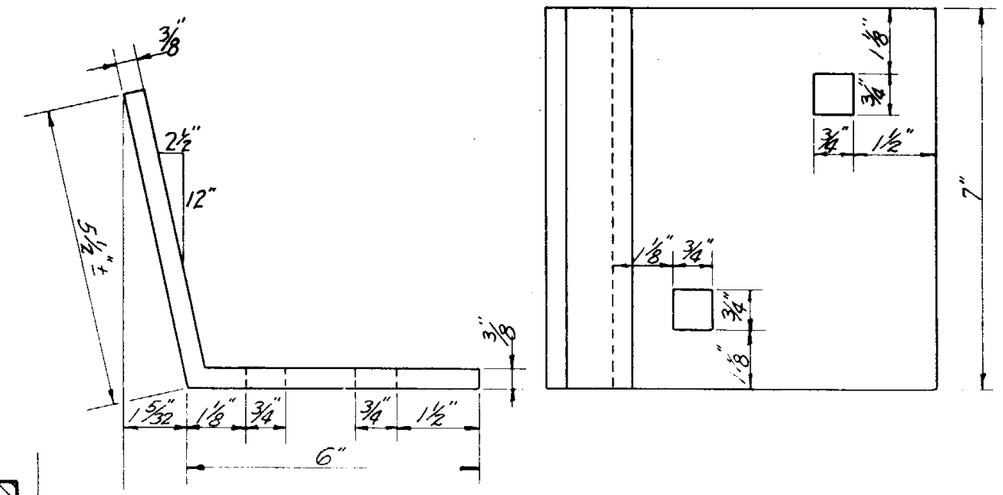

BRACE PLATE FOR FLANGE RAIL

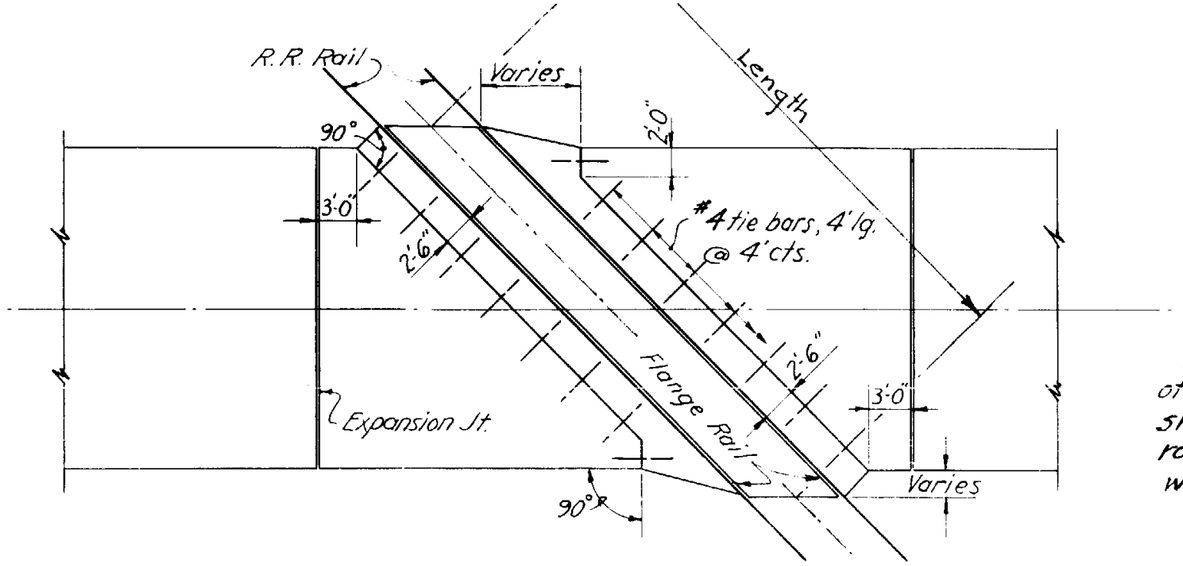

SKEWED R.R. CROSSING FOR CONCRETE PAVEMENT

Notes —

Standard R.R. Crossing consists of two flange rails and necessary number of brace plates and brace nuts. Welded nut and brace plate to be placed every third tie. Construction and assembly details as shown.

Length of R.R. Crossing is noted on plans in lineal feet.

For crossings on Southern Pacific Company use S.P. Standard CS576

For crossings on Santa Fe Railway use S.F. Standard C.E.S. 50136-744

Finished Roadway Surface of crossing (between rails) shall be same as adjacent roadway, unless noted otherwise on plans.

ARIZONA HIGHWAY DEPARTMENT
PLANS DIVISION

REV. 12-1-58

RAILROAD CROSSING

DRAWN		DRAWING NO
TRACED	GH Nov. 1945	C-35
CHECKED	HHW	
APPROVED PLANS ENG'R.		

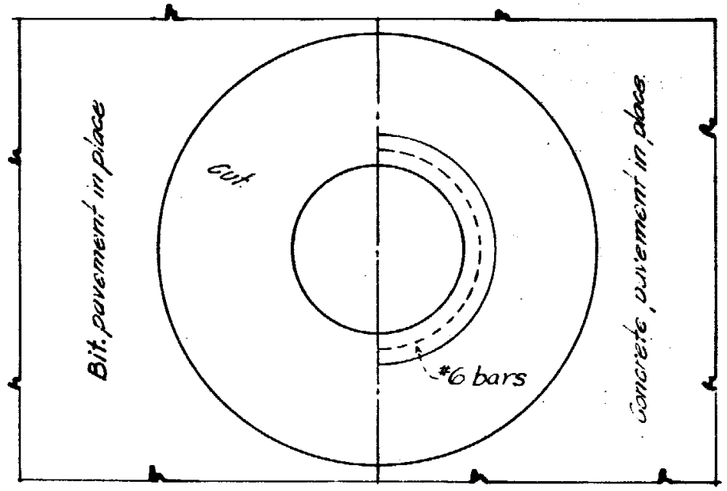

HALF PLAN BITUMINOUS PAVEMENT

HALF PLAN CONCRETE PAVEMENT

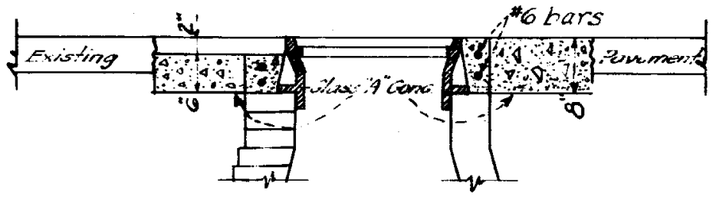

CUT FOR MANHOLE - FRAME & COVER

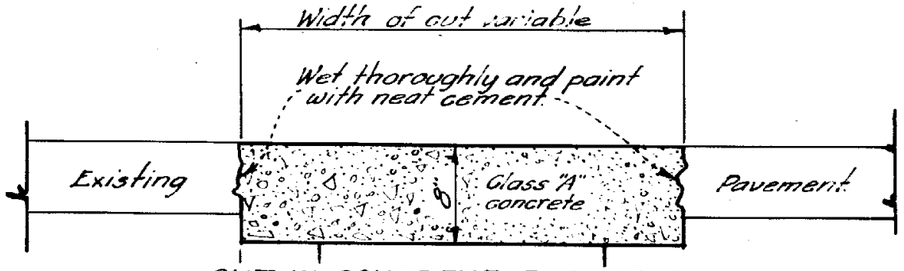

CUT IN CONCRETE PAVEMENT

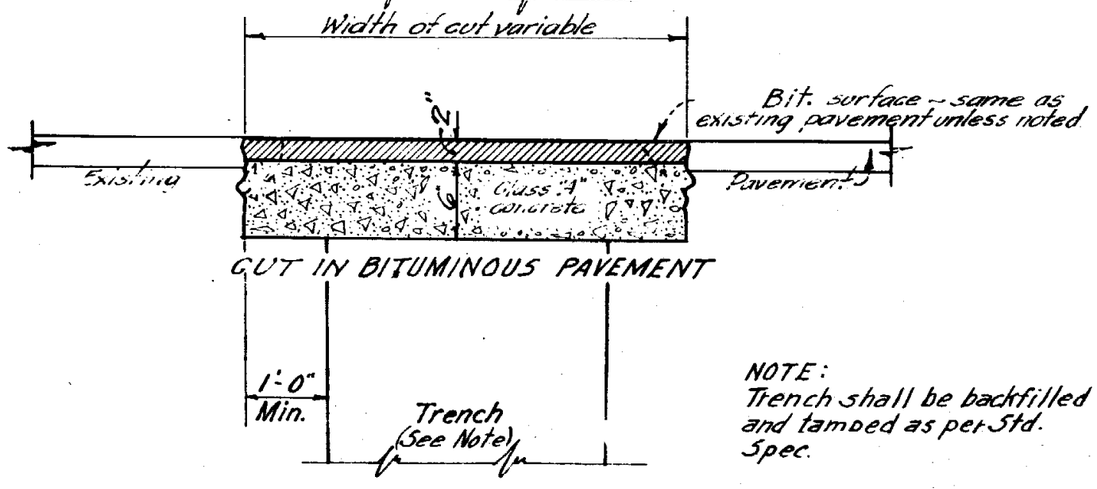

CUT IN BITUMINOUS PAVEMENT

NOTE:
Trench shall be backfilled and tamped as per Std. Spec.

ARIZONA HIGHWAY DEPARTMENT
PLANS DIVISION

REV.
3-20-50
6/10/55
12/1/58

PAVEMENT CUT AND REPLACEMENT

DRAWN BY	O.K. OCT. 1935	DRAWING NO.
TRACED BY	K.S. JULY 1938	C-34
CHECKED BY	H.H.W. JULY 1938	
APPROVED BY Engr. o. plans		

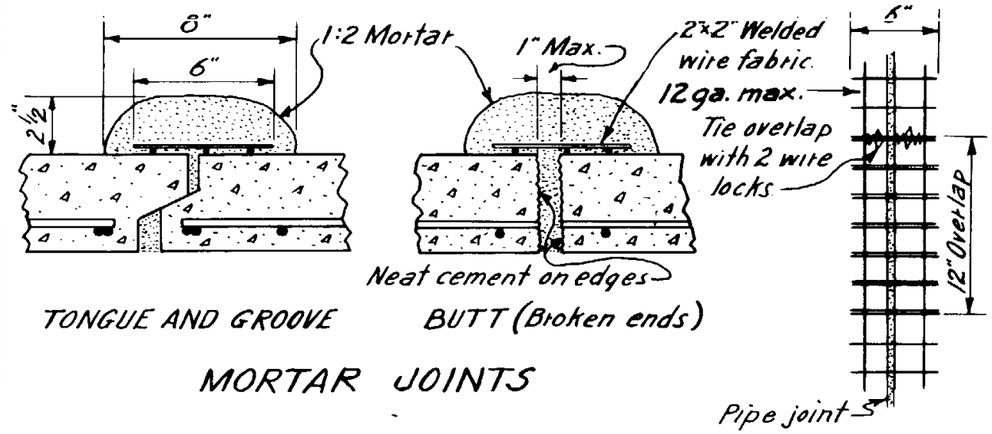

MORTAR JOINTS

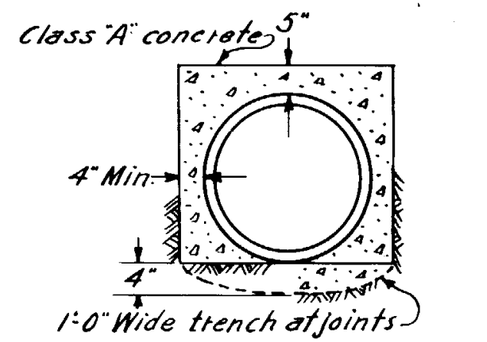

DETAIL "X"
CONCRETE ENCASEMENT

STRENGTH PIPE AND BEDDING NEEDED											
H feet above pipe	1'-6" to 10'	10' to 15'	15' to 20'	20' to 25'	25' to 30'	30' to 35'	35' to 40'	40' to 45'	45' to 50'	50' to 60'	60' to 70'
TYPE 1	C-III	C-IV	C-V								
TYPE 2				C-III	C-IV	B-IV	B-IV	B-V	B-V	B-V	B-V
TYPE 3	C-II	C-III	B-III	C-IV	B-IV	B-IV	B-IV	B-IV			

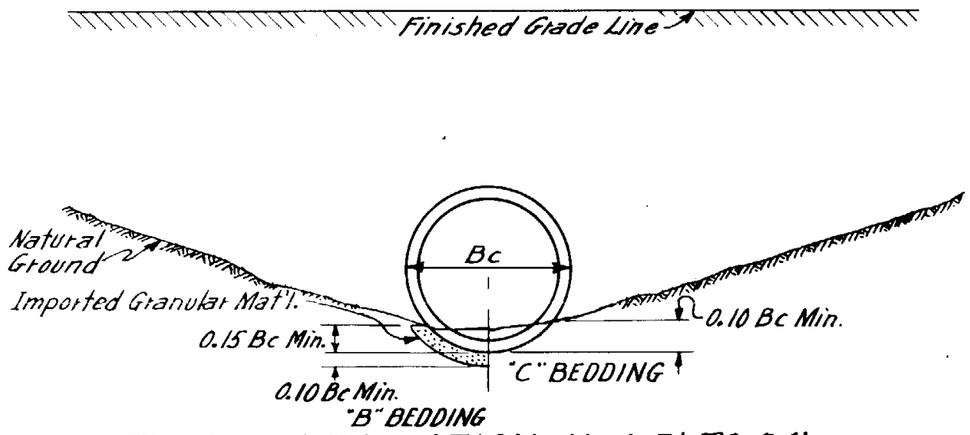

TYPE 1 INSTALLATION, H = 1.5' TO 20'

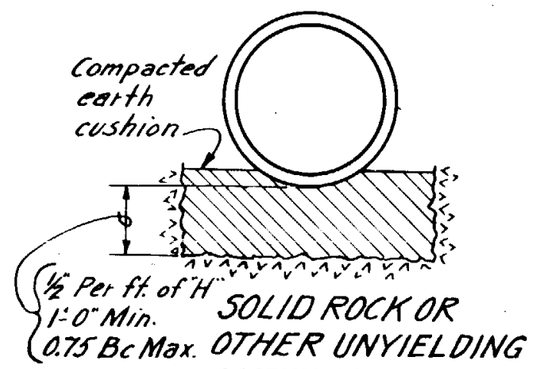

SOLID ROCK OR OTHER UNYIELDING MATERIAL

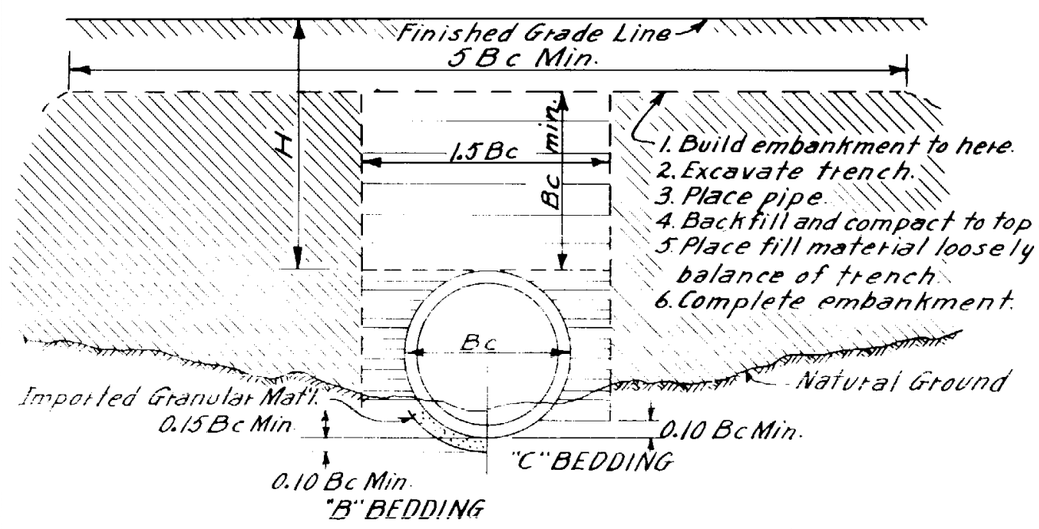

TYPE 2 INSTALLATION, H = OVER 20'

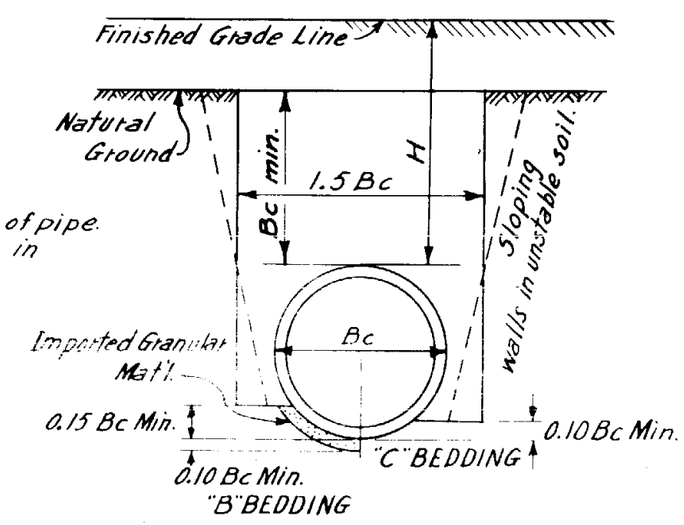

TYPE 3 INSTALLATION

GENERAL NOTES

Mortar joints shall be used unless rubber gasket joints are specified.

Rubber gasketed joints shall conform to standard specifications.

Pipe spacing in multiple installations shall be ½ nominal diameter but not less than 3'. Where headwalls are used, spacing shall be as shown on headwall standards.

Backfill material and backfilling shall conform to the standard specifications.

There shall be minimum cover of 1'-6" at all points within the roadway. Reference Standard C-13

Pipe specification reference A.A.S.H.O. M 170

"B" or "C" = Class of bedding.
II, III, IV and V = Class of R.C. pipe.
1, 2 and 3 = Type of installation.

THIS DETAIL SUPERSEDES DRAWING C-33

ARIZONA HIGHWAY DEPARTMENT
PLANS DIVISION

REV. 1/4/60

REINFORCED CONCRETE PIPE AND INSTALLATION

DRAWN	R.E. Willow - March-58	DRAWING NO.
TRACED	L.O. Moe - June 3, 58	C-33-1
CHECKED	12-1-58	
APPROVED ENGR. PLANS	F. Heidecker	

STATE OR NATIONAL LINE
COUNTY LINE
TOWNSHIP OR RANGE LINE
SECTION LINE
QUARTER SECTION LINE
FOREST OR RESERVATION LINE — SHADING ON INSIDE OF LINE
HIGHWAY R/W LINE
CONTROL OF ACCESS LINE — BLU-ZIP NO. BP33
UNFENCED PROPERTY — SHADING ON OUTSIDE OF LINE

SECTION AND QUARTER CORNERS

TELEPHONE OR TELEGRAPH LINE
POWER LINE

DOWN GUY AND ANCHOR
TRAFFIC SIGN
ROAD GUARD — NEW, EXISTING
GUIDE POST
STANDARD BARBED WIRE FENCE — GATE
WOOD FENCE
FABRIC WIRE FENCE
CATTLE GUARD — NEW, EXISTING
PIPE CULVERTS — NEW, EXISTING
REINFORCED CONCRETE CULVERTS — NEW, EXISTING

GROUND LINE-EARTH
GROUND LINE-ROCK
EXISTING ROAD — WIDTH & TYPE
OBLITERATE PAVEMENT — BLU-ZIP NO. BP12

SIDE ROAD TURNOUT — NEW, EXISTING
TREES AND SHRUBS
CHANNEL OR DITCH
DYKE OR LEVEE
BANK PROTECTION
RETAINING WALL

DROP INLET

RAILROAD CROSSING SIGNS — ADVANCE WARNING, X BUCK, FLASHING LIGHT

RAILROAD TRACK

COMBINED CURB & GUTTER — DEPRESSED FOR DRIVEWAY, W, NEW, EXISTING

MANHOLE — NEW, EXIST., TO BE ADJUSTED

FIRE HYDRANT — NEW, EXIST.

VALVE (WATER OR GAS) — W, G

METER BOX

STREET LIGHT — ON EXT. ARM

WATER LINE — W
GAS LINE — G
IRRIGATION LINE — IRR
STORM SEWER — S S
SANITARY SEWER — S

WELL OR PUMP HOUSE

SURVEY MONUMENT — NEW, EXIST.

R/W MARKER — NEW, EXIST.

MILE POST — NEW, EXIST.

ANGLE POINT AND ANGLE — NEW, EXIST.

NEW CONCRETE PAVEMENT — BLU-ZIP NO. BP34

NEW BIT. MIX. PAVEMENT — BLU-ZIP NO. BP94

EXISTING PAVEMENT — BLU-ZIP NO. BP3

BIT. PAVEMENT (SECTION)

P.C. CONCRETE (SECTION)

AGGREGATE BASE-COARSE

AGGREGATE BASE-FINE

SELECT MATERIAL

FED. ROAD DIV. NO.	STATE	PROJ. NO.	SHEET NO.	TOTAL SHEETS	AS BUILT
7	ARIZ.				
7½/10	5/10	1 5/10	5/10	5/10	1

3/10, 3/10

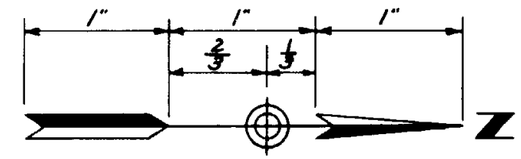

USE ON LARGE SCALE DRAWINGS

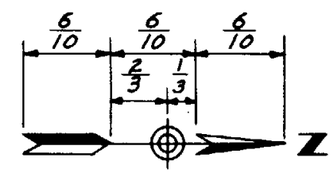

USE ON SMALL SCALE DRAWINGS

ARIZONA HIGHWAY DEPARTMENT
PLANS DIVISION

PLANS SYMBOLS

DRAWN	L.O. Moe, 10-1-58	DRAWING NO.
TRACED	L.O. Moe, 10-15-58	C-43
CHECKED	12-1-58	
APPROVED ENGR. PLANS		

REV. 1-4-60