620.03

STATE OF ARIZONA

STATE HIGHWAY DEPARTMENT

PLANS DIVISION

1955

"C"

ROADWAY STANDARDS

FOR USE IN

FIELD AND OFFICE

ISSUED TO

HIGHWAY PLANS SERVICES

ARIZ. HWY. DEPT. LIBRARY
PHOENIX, ARIZONA

Ariz
620.03
A R Copy 2

ARIZONA STATE HIGHWAY DEPARTMENT - PLANS DIVISION
INDEX TO CONSTRUCTION STANDARDS

DRWG. NO.	SUBJECT
C-23	BANK PROTECTION
C-38	BENCH MARKER
C-25	CATCH BASIN NO. 1
C-26	CATCH BASIN NO. 2
C-27	CATCH BASIN NO. 3
C-24	CATCH BASIN, CORRUGATED METAL
C-14	CATTLE GUARD
C-14 X	CATTLE GUARD, RANCH
C-20	CONCRETE CURB AND GUTTER
C-19	CONCRETE PAVEMENT JOINTS ~ LONGITUDINAL
C-18	CONCRETE PAVEMENT JOINTS ~ TRANSVERSE
C-33	CONCRETE PIPE AND INSTALLATION
C-33	CONCRETE PIPE, ENCASEMENT OF (DETAIL X)
C-38	CONCRETE CONSTRUCTION MARKER
C-24	CORRUGATED METAL PIPES, PERFORATED
C-10	CORRUGATED METAL PIPES, STRUTS FOR
C-21	CURB AND GUTTER MEASUREMENT
C-3	CURBS, EMBANKMENT
C-4	DITCHES AND CHANNELS
C-4	DIKES
C-15	FENCE AND GATES, WOOD POSTS
C-16	FENCE AND GATES, STEEL POSTS
C-17	FENCE, INDUSTRIAL TYPE
C-5	FORD TYPE A, CONCRETE WALLS
C-6	FORD TYPE B, WOOD WALLS
C-8	GUIDE POSTS
C-3	GUTTERS, ROADWAY
C-12	HEADWALLS, CEMENT RUBBLE
C-12	HEADWALLS, PLAIN CONCRETE
C-9	HEADWALLS, REINF. CONC. ~ STRAIGHT, "L", AND "U" TYPE
C-10	HEADWALLS, REINF. CONC. ~ WING TYPE
C-11	HEADWALLS, REINF. CONC. ~ DROP INLET

DRWG. NO.	SUBJECT
C-42	INSTALLATION OF ROAD GUARD AT STRUCTURE APPROACHES
C-32	IRRIGATION GATE
C-31	IRRIGATION STANDPIPE NO. 1 AND NO. 2
C-32	IRRIGATION VALVE
C-30	MANHOLES NO. 1 AND NO. 2
C-28	MANHOLE FRAME AND COVER NO. 1
C-29	MANHOLE FRAME AND COVER NO. 2
C-38	MARKERS ~ PROJECT, BENCH, CONCRETE CONSTRUCTION
C-1	MARKERS ~ RIGHT OF WAY
C-38	MILE POST
C-39	PARABOLIC CROWN FORMULA AND TABLES
C-34	PAVEMENT CUT AND REPLACEMENT
C-41	PLANT CONSERVATION
C-13	PIPE CULVERT INSTALLATION
C-38	PROJECT MARKER
C-35	RAILROAD CROSSING - FLANGE RAIL
C-36	RAILROAD CROSSING - PLANKED
C-37	RAILROAD CROSSING SIGNS
C-22	RETAINING WALLS - CEMENT RUBBLE & DRY RUBBLE
C-23	RIP RAP, PLAIN AND GROUTED
C-7	ROAD GUARD
C-41	ROCK AND EARTH CUTS
C-6	ROCK BASKET
C-1	R/W MARKERS
C-20	SIDEWALK
C-2	SLOPES, CUT AND EMBANKMENT
C-2	SLOPE ROUNDING
C-40	SLOPE ROUNDING GAUGE
C-21	STREET INTERSECTION GRADES
C-1	SURVEY MONUMENT AND COVER
C-10	STRUTS FOR C.M.P.
C-3	TURNOUTS, PAVED
C-33	VITRIFIED CLAY PIPE
C-20	VALLEY GUTTER

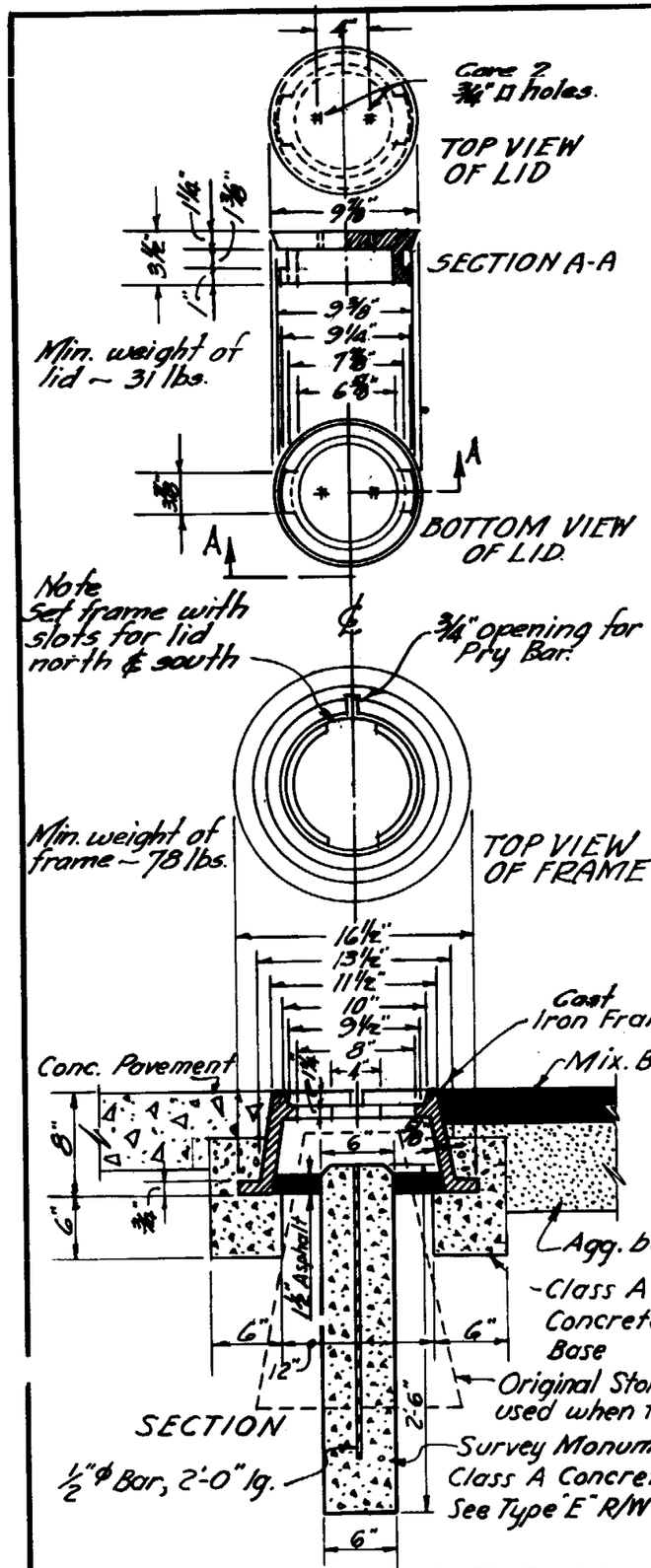

The Contractor shall bid on the frame, cover, and monument as unit complete in place

SURVEY MONUMENT & COVER

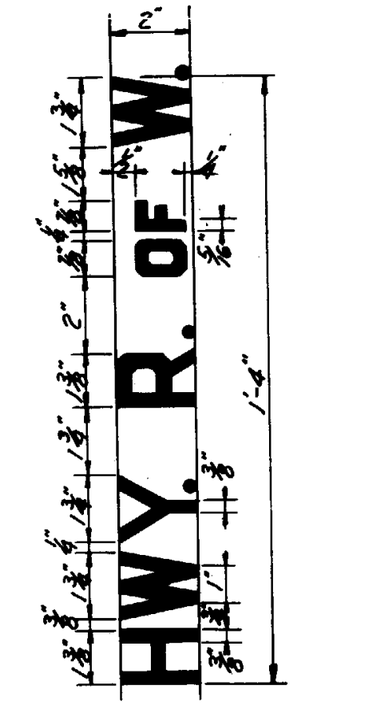

DETAIL OF LETTERS

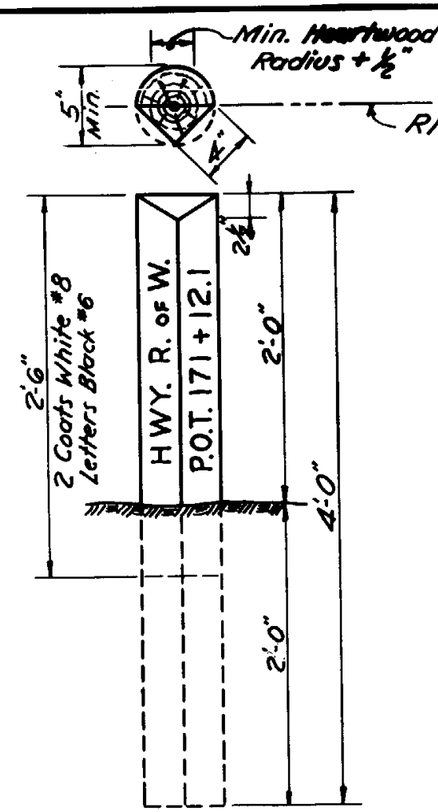

TYPE "A" R/W MARKER

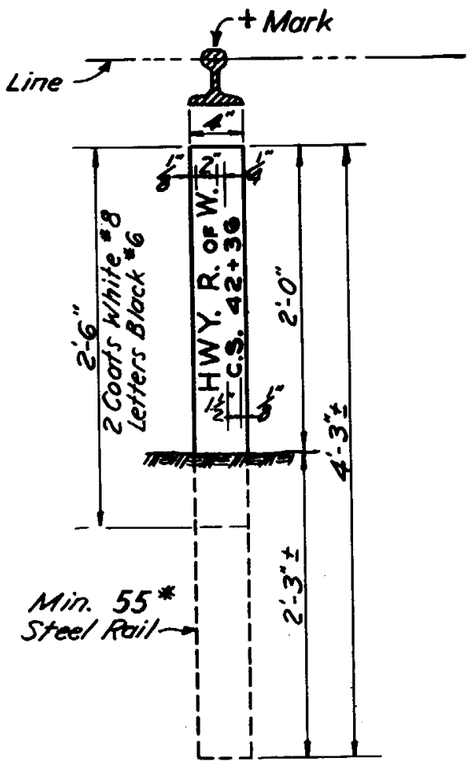

TYPE "B" R/W MARKER

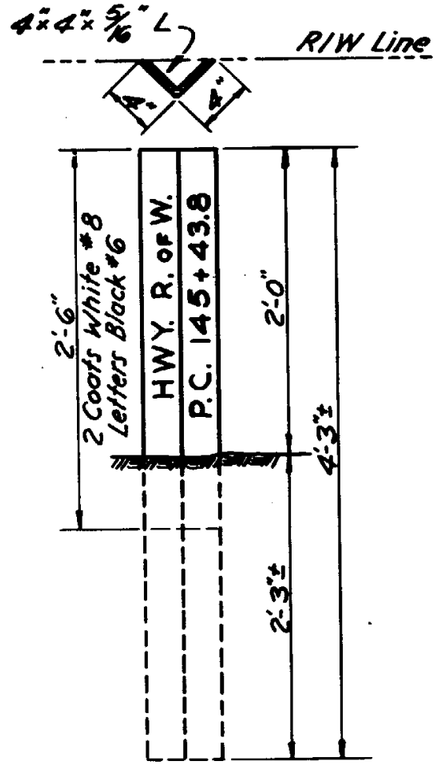

TYPE "C" R/W MARKER

Posts to be native juniper, native cedar, or native cypress. Minimum 5" diameter at top. Top to be beveled 2 1/2" and two sides to be dressed to a minimum 4" face.

R/W Markers to be erected where shown on the plans, or as determined by the engineer.

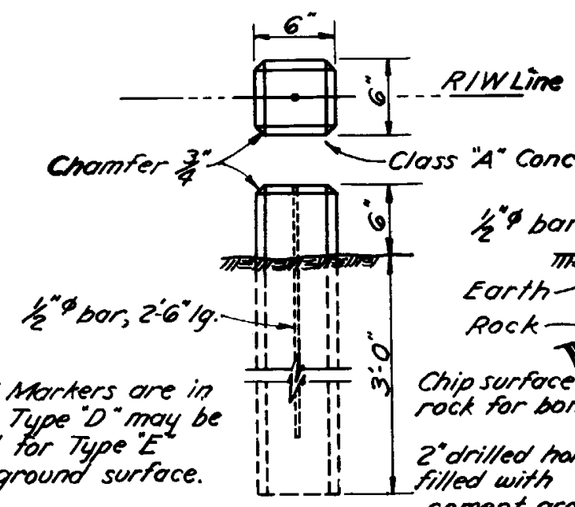

When R/W Markers are in solid rock, Type "D" may be substituted for Type "E" below the ground surface.

TYPE "E"

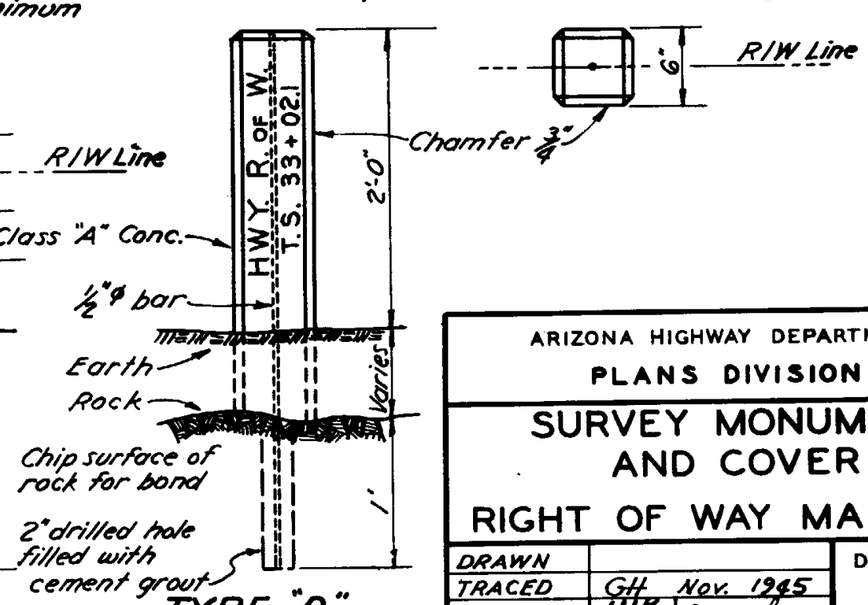

TYPE "D"

ARIZONA HIGHWAY DEPARTMENT
PLANS DIVISION

SURVEY MONUMENT AND COVER
RIGHT OF WAY MARKERS

DRAWN		DRAWING NO.
TRACED	GH Nov. 1945	C-1
CHECKED	HHWessel	
APPROVED ENGR. PLANS	HHWessel	

REV. 3/17/50 2/4/54 6/14/55

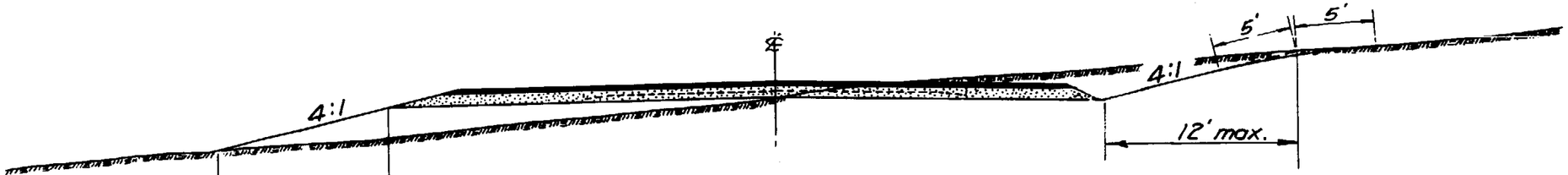

TYPICAL SECTION - MINIMUM SLOPES

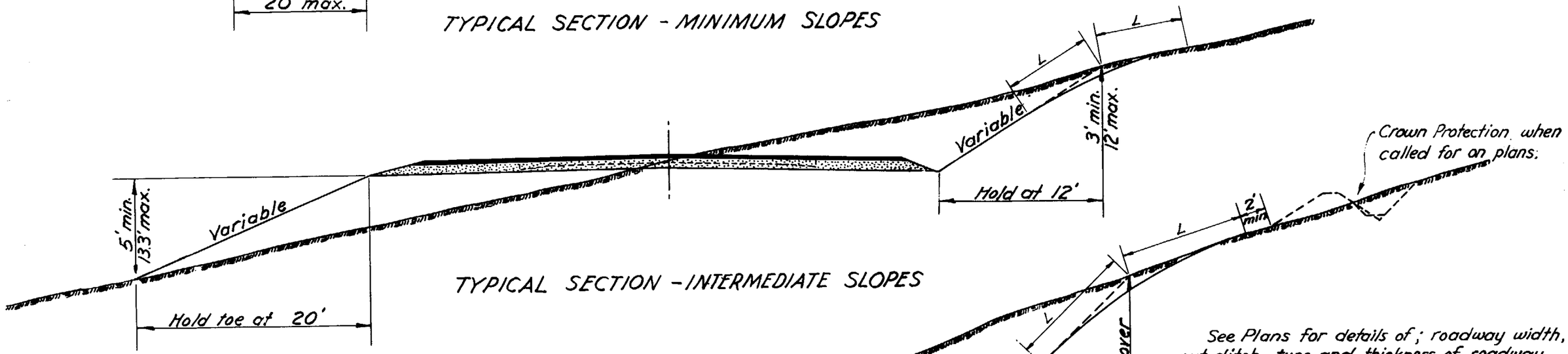

TYPICAL SECTION - INTERMEDIATE SLOPES

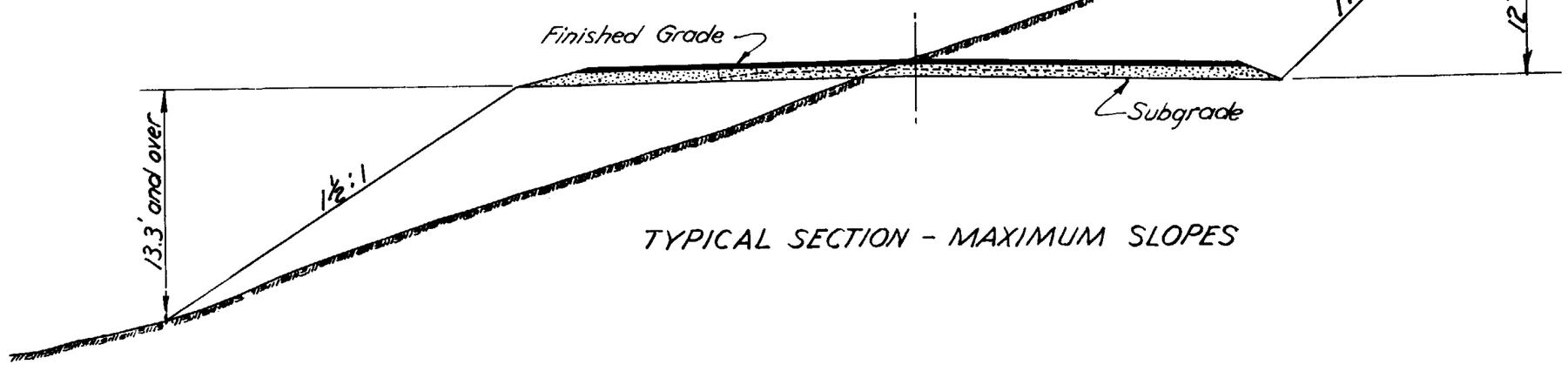

TYPICAL SECTION - MAXIMUM SLOPES

HALF SECTION - SIDE BORROW

HALF SECTION-MINOR CUTS

See Plans for details of; roadway width, cut ditch, type and thickness of roadway surfacing, superelevation, and curve widening.

Standard Crown Slope for P.C.Concrete 0.01' per foot; for Bit. Surf. Treat. and Mix. Bit. Surf. 0.015' per foot.

Standard Cut and embankment slopes as shown on this sheet may be superseded by special slopes where shown on plans.

For Cuts up to 6' use 5' semi-tangents (L) for slope rounding. For each additional foot of cut add 1' to semi-tangent to 11' maximum. Finish with approved drag so that the ground will not have a scarred appearance.

Do not daylight small negative slopes, but round as indicated.

ARIZONA HIGHWAY DEPARTMENT
PLANS DIVISION

REV. 2/4/55 6/10/55

SLOPES

SLOPE ROUNDING

DRAWN	GH	Nov. 1945	DRAWING NO.
TRACED	GH	Nov. 1945	C-2
CHECKED	HHW		
APPROVED PLANS ENG'R.	HH Jessel		

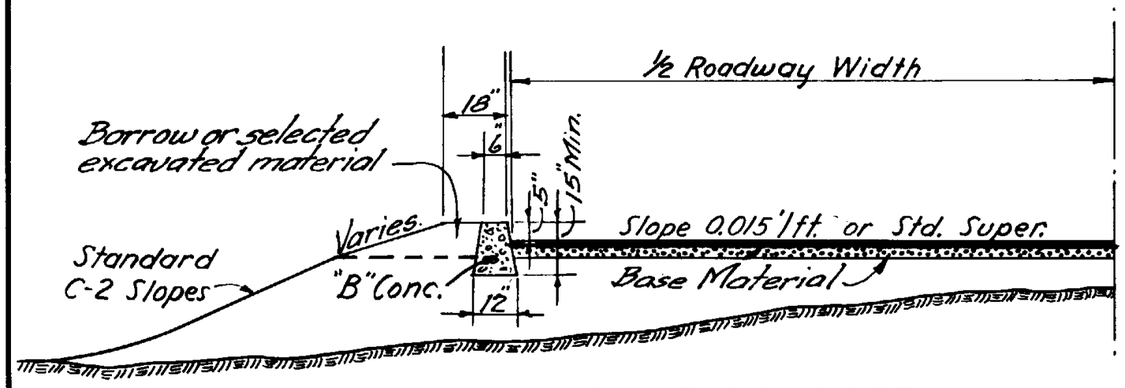

CONCRETE CURB

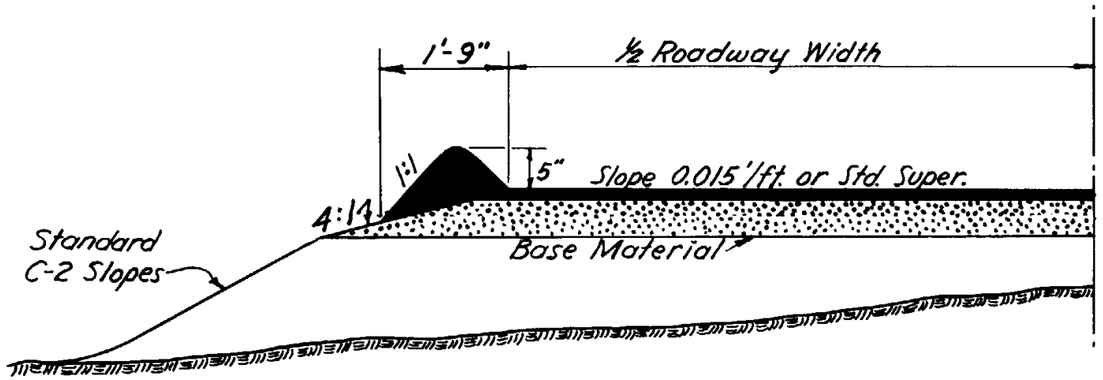

MIX. BIT. CURB

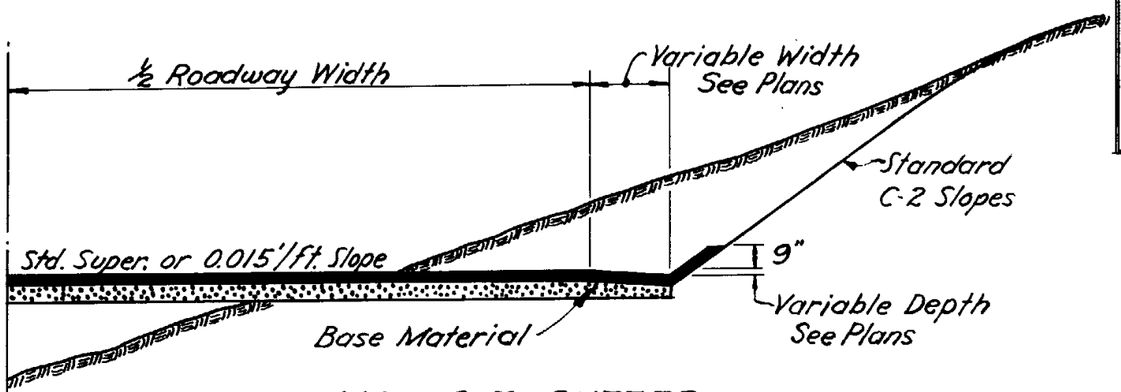

MIX. BIT. GUTTER THRU CUTS

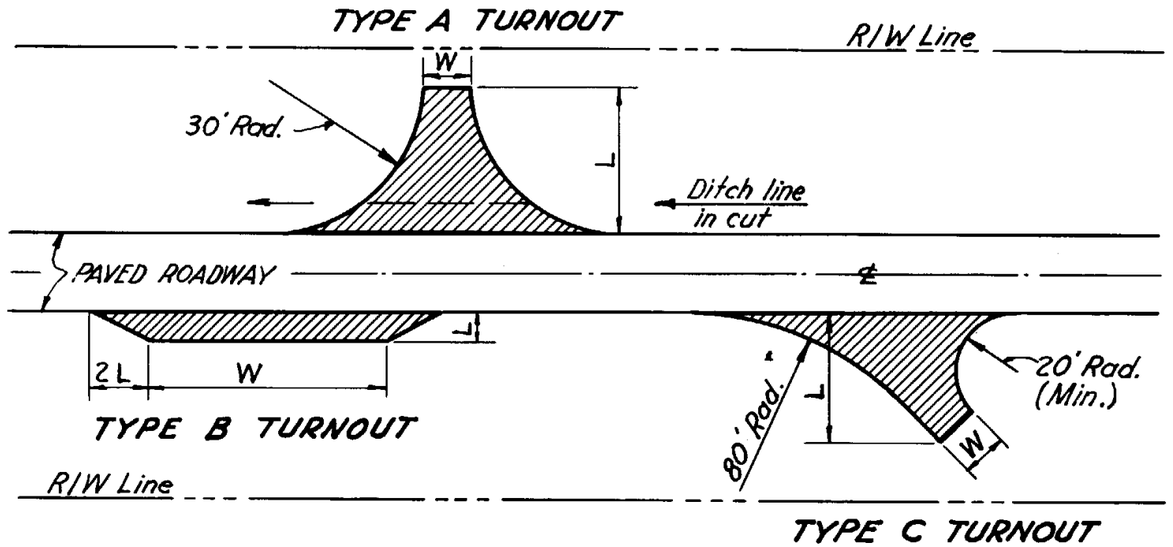

PAVED TURNOUTS

NOTES

W indicates width of paved surface of turnout.
L indicates length of paved surface of turnout.
Farm road turnout, 10' min. width. (W)
County road turnout, 20' min. width. (W)
Size and type of turnouts is noted on plans as follows: W, L, Surface, and Type (12'×30' M.B.S. Type A)
Base material thickness under turnouts is the same as shown on the roadway section, unless otherwise noted.
Any excavation or embankment for turnouts is included in the roadway quantities.
Turnouts are to be placed where shown on plans, or as directed by the Engineer.

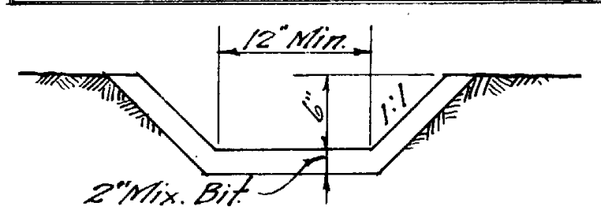

MIX. BIT. GUTTER TYPE A.

ARIZONA HIGHWAY DEPARTMENT

PLANS DIVISION

MIX. BIT. & CONCRETE CURBS
MIX. BIT. GUTTER
PAVED TURNOUTS

DRAWN	GH Nov. 1945	DRAWING NO.
TRACED	GH Nov. 1945	C-3
CHECKED	HHW	
APPROVED ENGR. PLANS	HH Vessel	

REV. 3/17/50 2/4/55 4/20/55 6/19/55

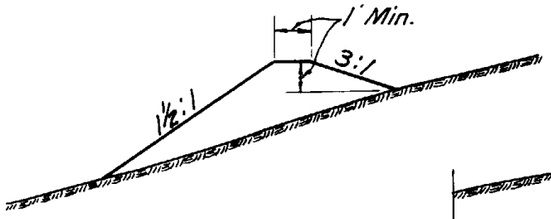

CROWN DYKE

To be paid for by lineal measure.

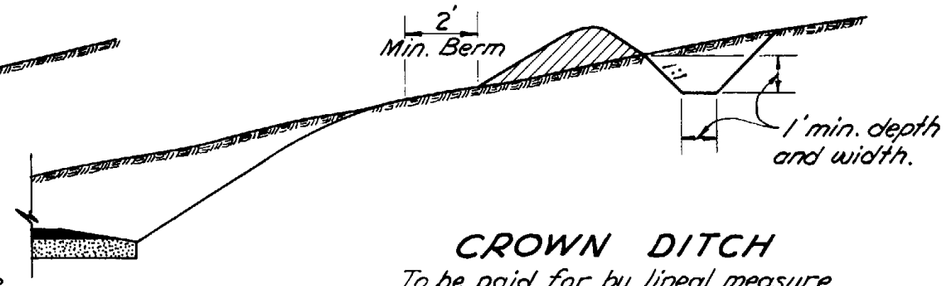

CROWN DITCH

To be paid for by lineal measure

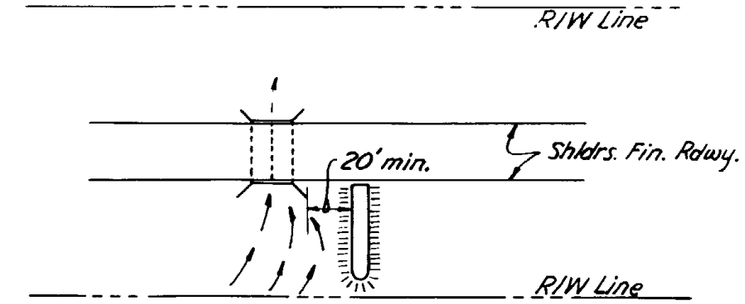

TYPICAL DIKE INSTALLATION AT STRUCTURE

Dykes at structures to be so placed that they create a water cushion.

Crown protection should be constructed in such a manner that the flow of intercepted water shall not exceed 0.5%.

Grader ditch section may be used or a ditch section similar to above may be made in any manner approved by the Engineer.

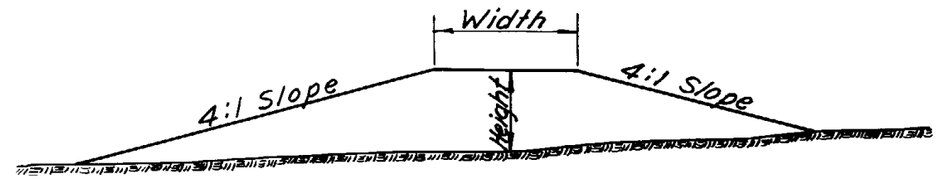

TYPE B DIKE

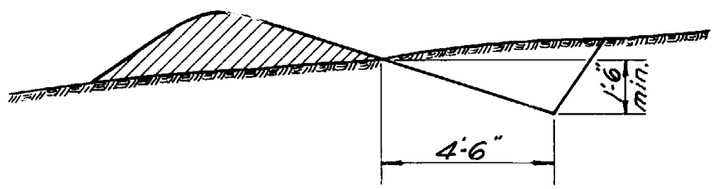

GRADER DITCH

To be paid for by lineal measure

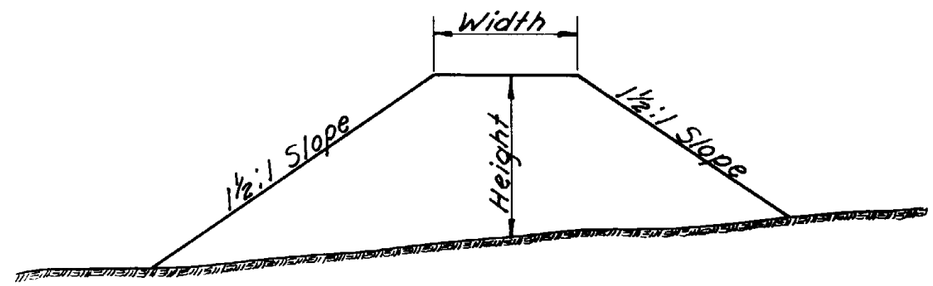

TYPE A DIKE

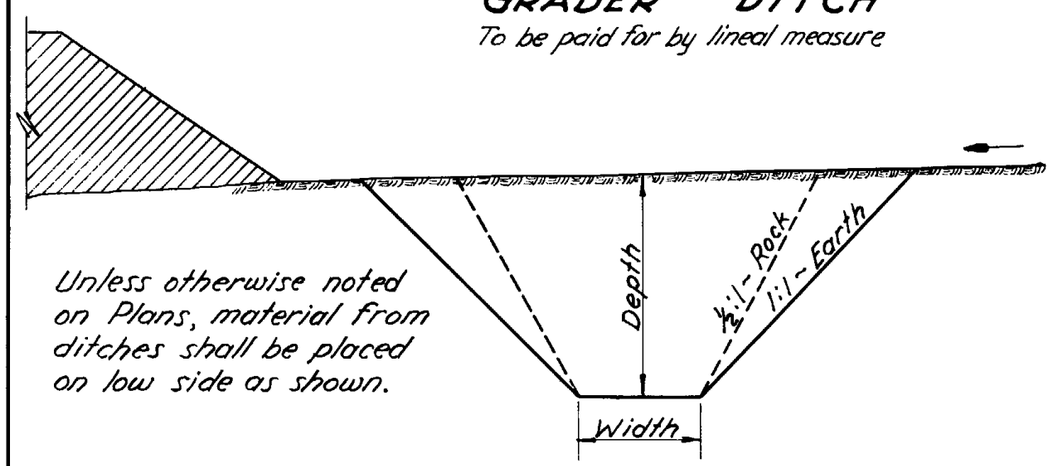

Unless otherwise noted on Plans, material from ditches shall be placed on low side as shown.

DITCH OR CHANNEL

Dimensions of ditches and dikes as shown on plans are respectively width, depth or height, and length.

ARIZONA HIGHWAY DEPARTMENT PLANS DIVISION			REV. 8/14/55
DITCHES AND DYKES			
DRAWN	GH Dec. 1945	DRAWING NO.	
TRACED	GH Dec. 1945	C-4	
CHECKED	HHW		
APPROVED PLANS ENG'R.	HH Wessel		

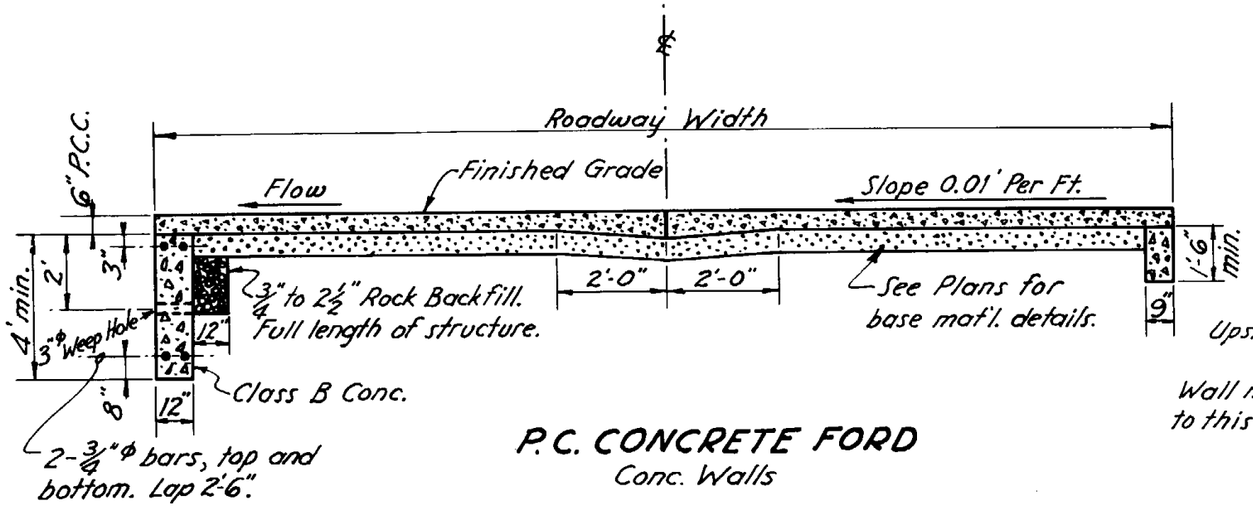

P.C. CONCRETE FORD
Conc. Walls

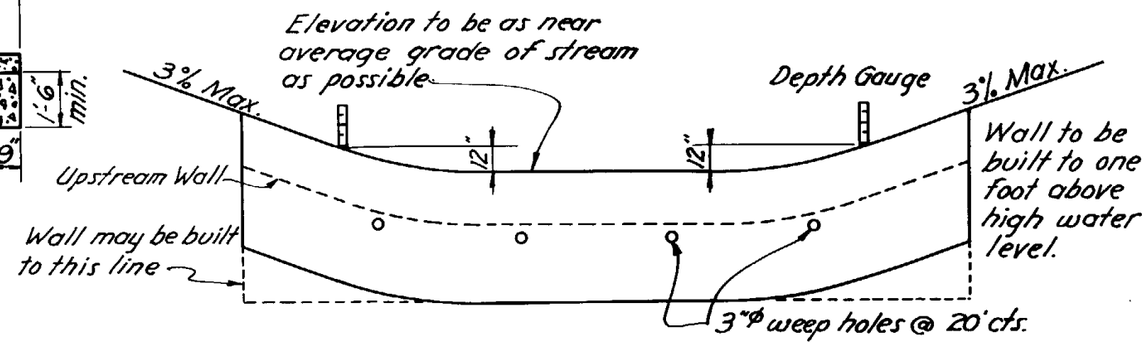

ELEVATION LOOKING UPSTREAM

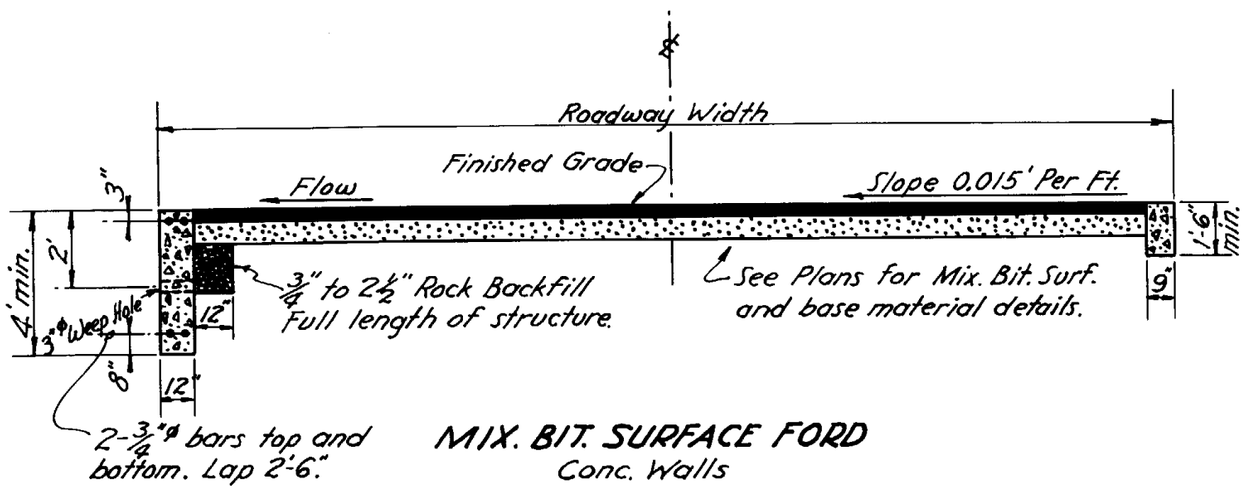

MIX. BIT. SURFACE FORD
Conc. Walls

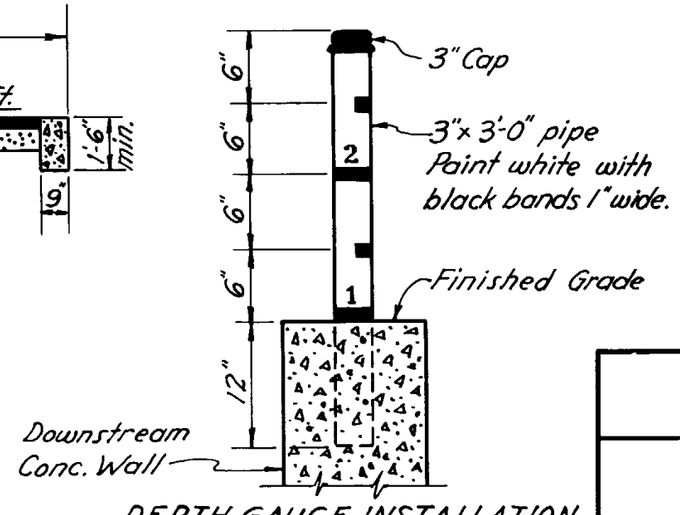

DEPTH GAUGE INSTALLATION

ARIZONA HIGHWAY DEPARTMENT **PLANS DIVISION**			REV.
TYPE "A" FORD			
DRAWN	C.B.B. July 1945	DRAWING NO.	
TRACED	GH Nov. 1945	C-5	
CHECKED	HHW		
APPROVED ENG'R. PLANS	HH Wessel		

Note – All timber to be structural grade.

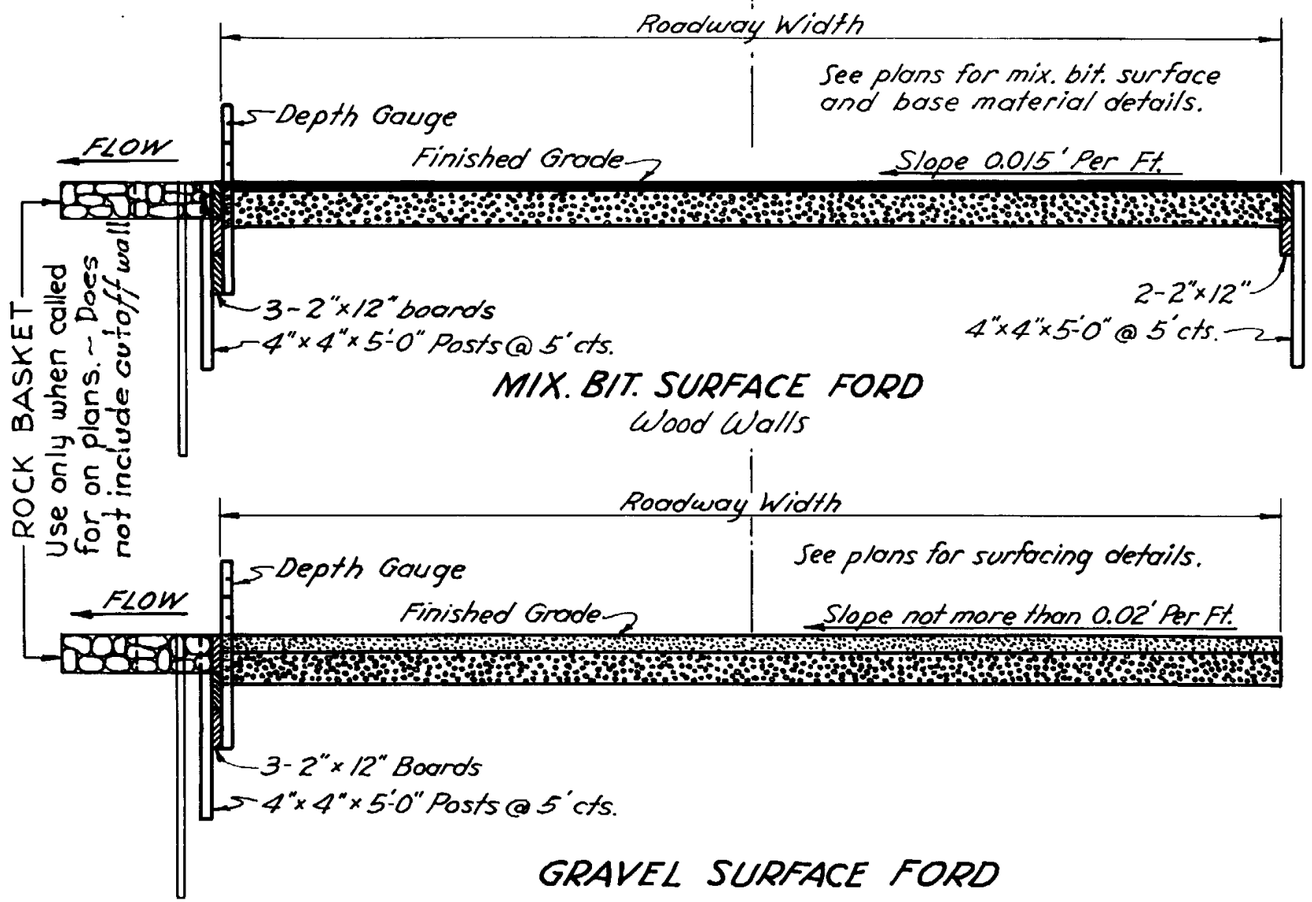

MIX. BIT. SURFACE FORD
Wood Walls

GRAVEL SURFACE FORD

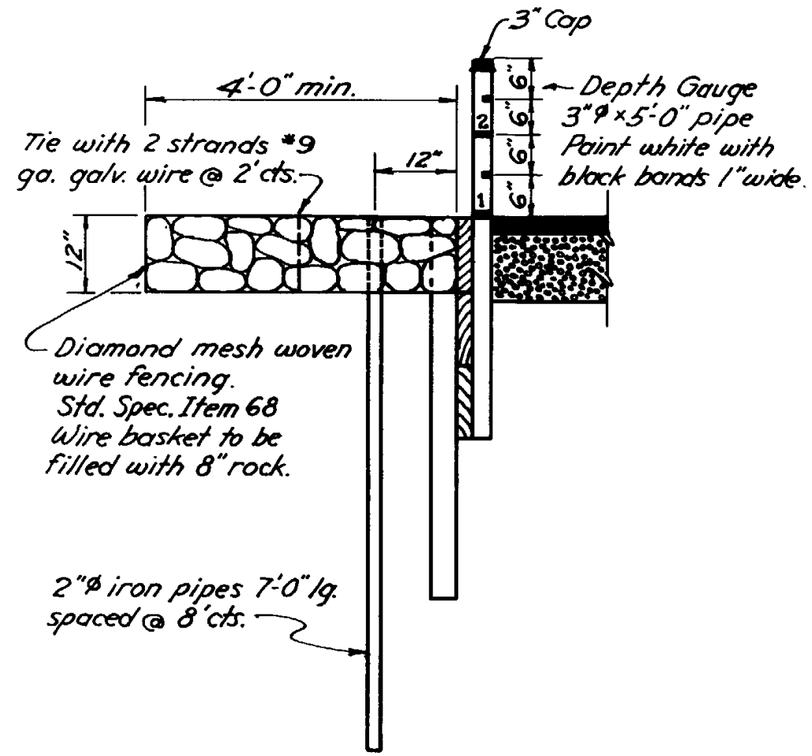

DETAIL OF
ROCK FILLED WIRE BASKET

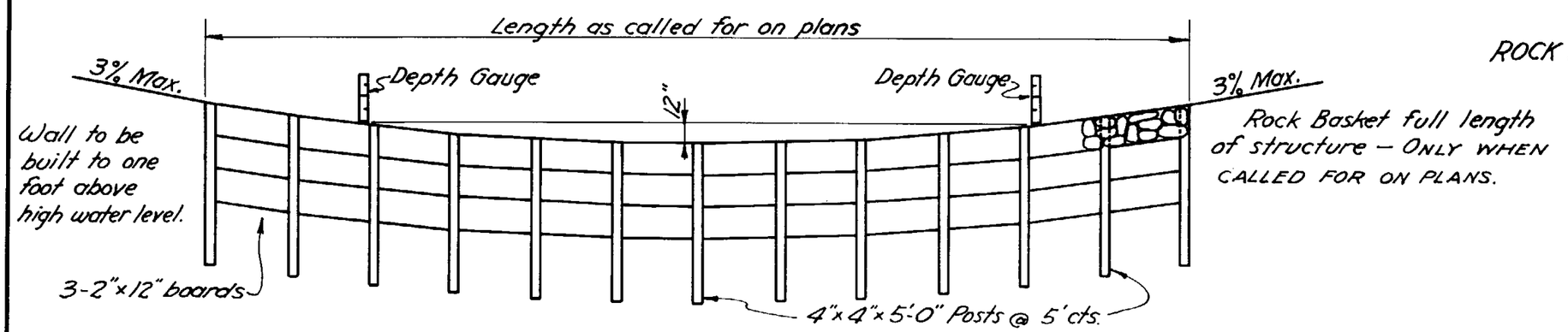

ELEVATION LOOKING UPSTREAM

ARIZONA HIGHWAY DEPARTMENT PLANS DIVISION			REV. 3/17/50 8/17/55
TYPE "B" FORD ROCK BASKET			
DRAWN	C.B.B. July 1945	DRAWING NO.	
TRACED	GH Nov. 1945	C-6	
CHECKED	HHW		
APPROVED ENGR. PLANS	HH Wessel		

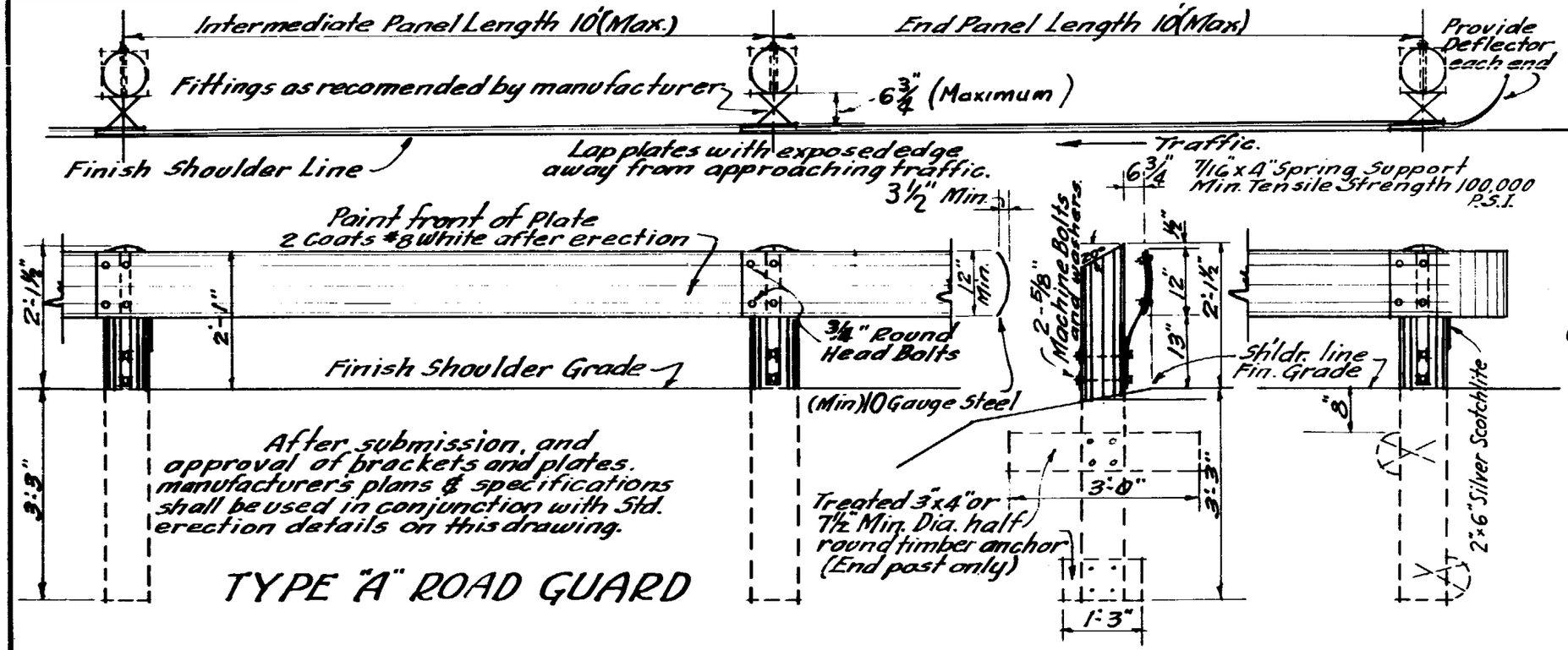

After submission, and approval of brackets and plates. manufacturer's plans & specifications shall be used in conjunction with Std. erection details on this drawing.

TYPE "A" ROAD GUARD

GENERAL NOTES

In order to secure proper alignment, all bolt holes shall be bored and tops of all posts trimmed after posts are set.

Treated structural timber posts shall be minimum 6"x6" (Rough) and need not be painted.

Steel posts, if galvanizing is waived, shall be painted 2 coats of #5 (black) over 1 coat of #1 (primer) full length.

All posts for road guard shall be able to withstand a minimum theoretical bending moment of 50,000 inch pounds.

Unless otherwise called for, either type A or B road guard may be used.

Place 2"x6" Silver Scotch lite tab on end posts and every third intermediate post, facing traffic.

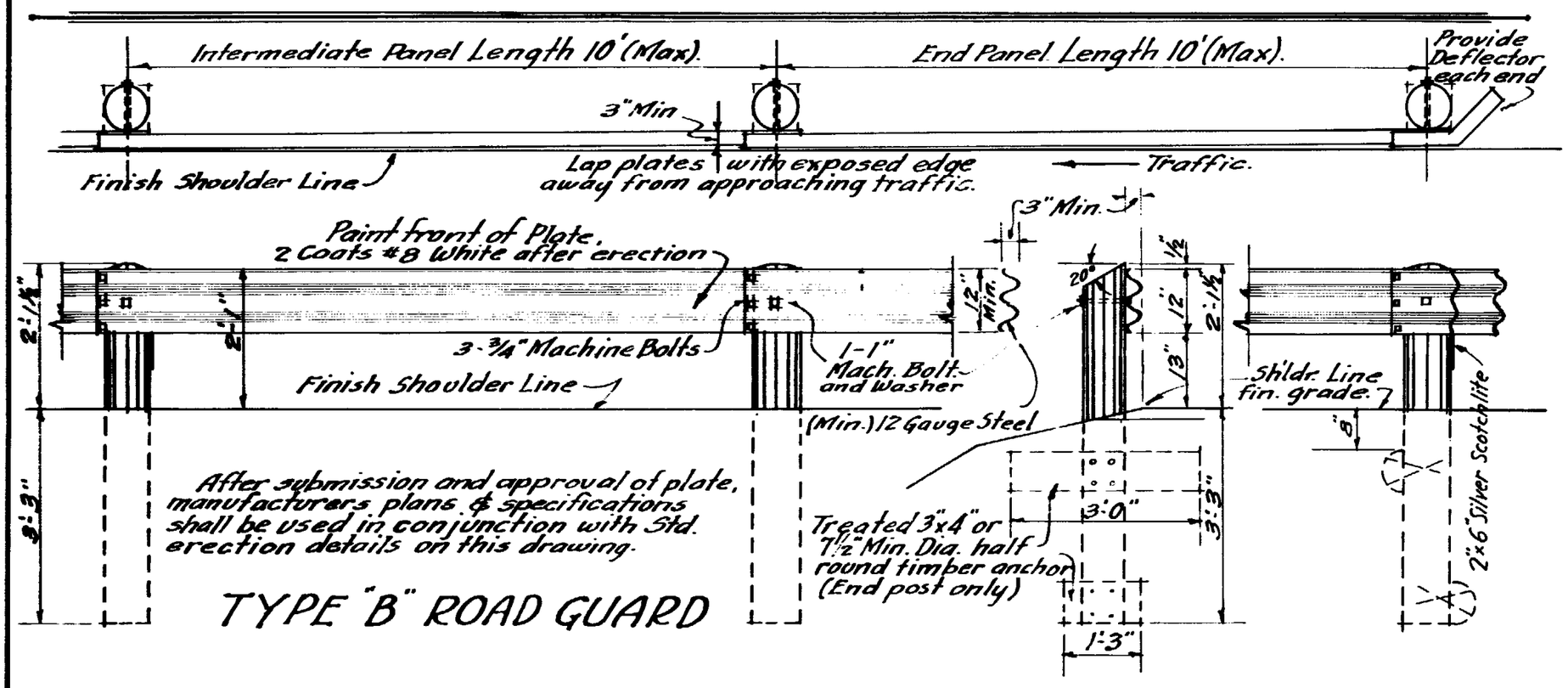

After submission and approval of plate, manufacturers plans & specifications shall be used in conjunction with Std. erection details on this drawing.

TYPE "B" ROAD GUARD

ARIZONA HIGHWAY DEPARTMENT PLANS DIVISION		REV. 2/9/49 8/5/49. 3/17/50 2/2/54 2/7/55 4/10/55
ROAD GUARD		
REDRAWN	K. Stokoe 1/14/49	DRAWING NO.
TRACED	K. Stokoe 1/14/49	C-7
CHECKED		
APPROVED ENGR. PLANS	H H Wessel	

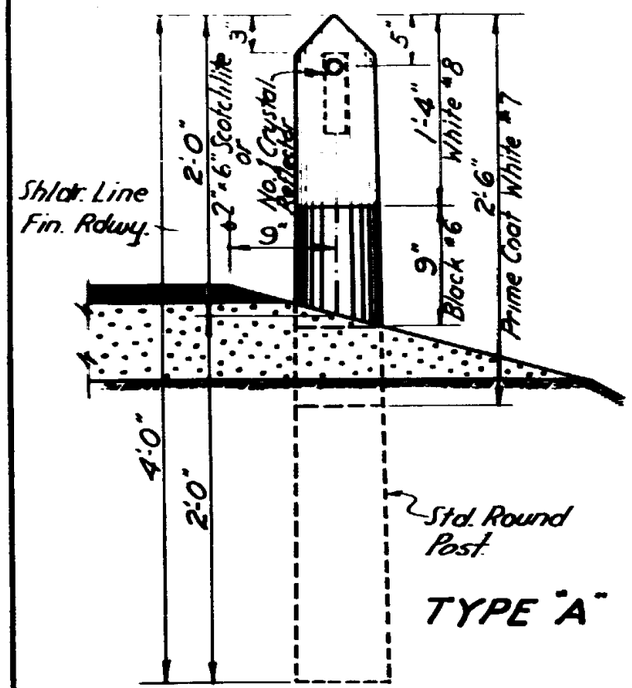

TYPE "A"

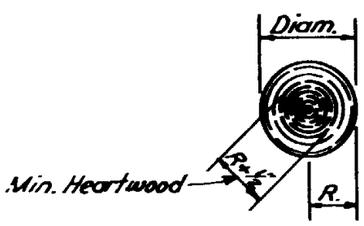

Note – Use driving head for driving all posts

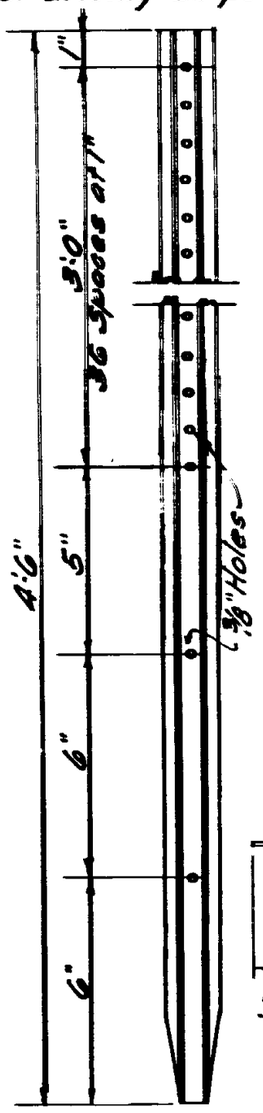

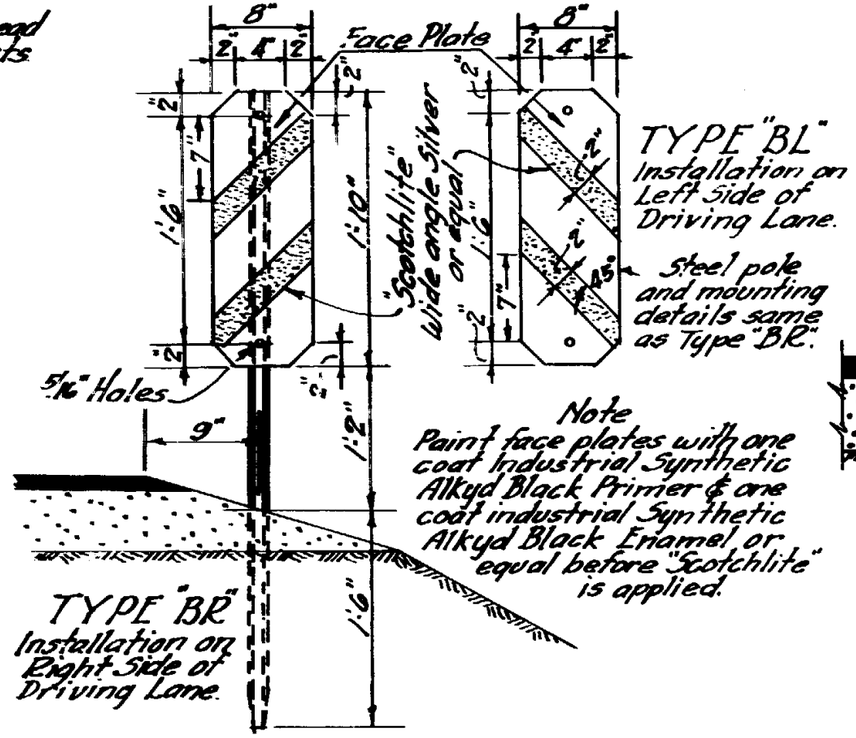

Note
Paint face plates with one coat Industrial Synthetic Alkyd Black Primer & one coat industrial Synthetic Alkyd Black Enamel, or equal before "Scotchlite" is applied.

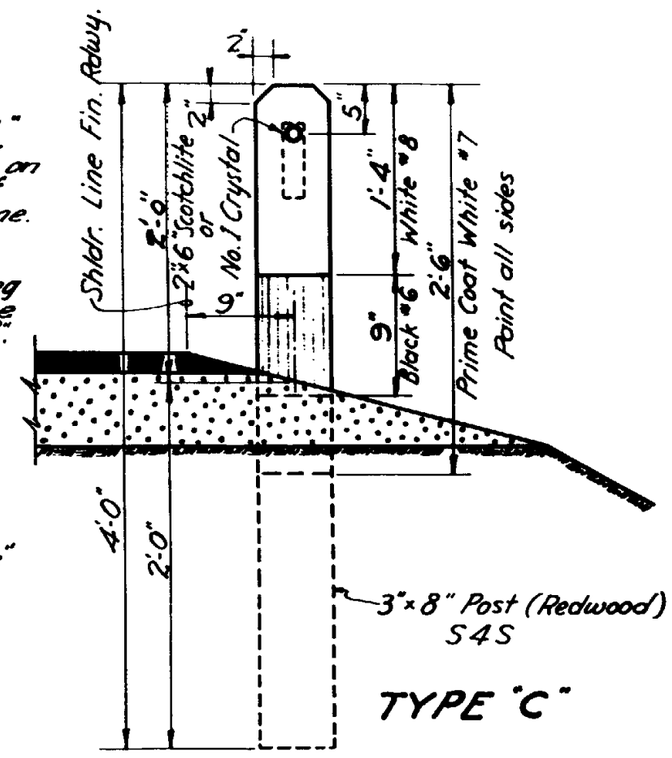

TYPE "C"

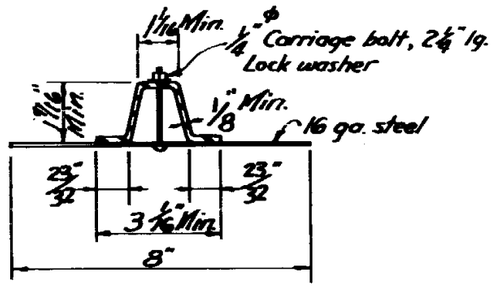

STEEL POST DETAILS

Prime Coat Red #1 and 2 Coats Industrial Synthetic Alkyd White Enamel or approved equal.

Round posts shall be 6" min. and 9" max. diameter at a point 6" below top of post and 7½" min. and 10½" max. diameter at the butt. They shall be graded for size so that in any one continuous row of guide posts the top diameters shall not vary more than 1". Measurement for size shall be made after shrinkage.

Where rectangular posts are used, they shall be 3"×8", S4S.

All guide posts shall conform to Std. Specifications.

Guide post locations shown on plans are approximate and changes may be necessary to meet field conditions.

When placed in rows, guide posts shall be spaced at 200 ft. ctrs. unless otherwise called for on plans.

After erection and painting, install a No. 1 Crystal reflector button or Silver Scotchlite tab in each post, facing traffic.

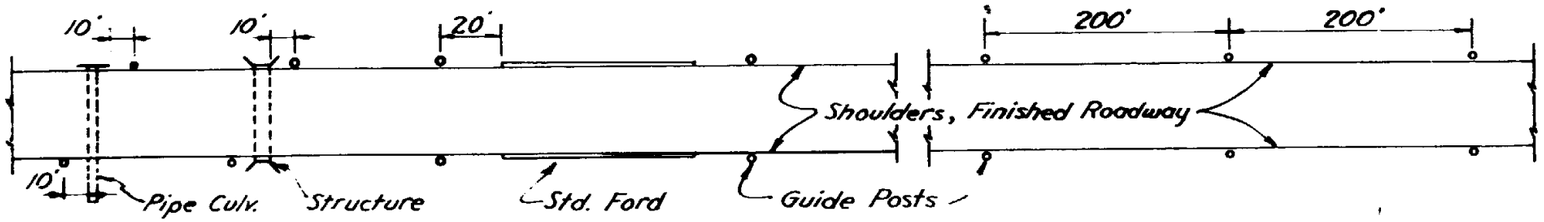

TYPICAL GUIDE POST INSTALLATION

ARIZONA HIGHWAY DEPARTMENT

PLANS DIVISION

GUIDE POSTS

DRAWN	C.B.B. July 1945	DRAWING NO.
TRACED	G.H. Nov. 1945	C-8
CHECKED	HHW	
APPROVED ENGR. PLANS	[signature]	

REV. 3-20-50 Post Lgth. 4-29-52 G.H. 1-25-56 A.S. 11-15-56

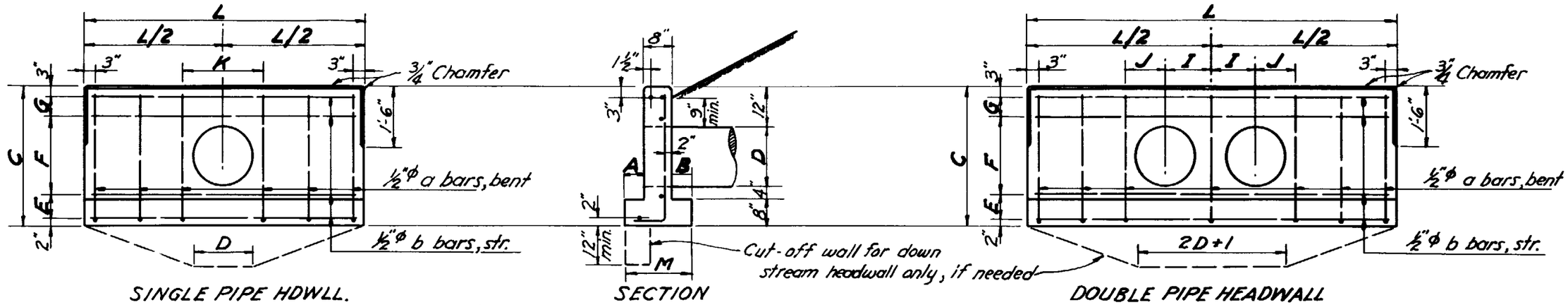

STANDARD STRAIGHT HEADWALLS

Scale 3/8"=1'-0"

SINGLE PIPE HEADWALL															DOUBLE PIPE HEADWALL															
Diam. D	DIMENSIONS									"A" Conc. C.Y.	Steel – 1/2"φ bars a bars No.	a bars Lgth.	b bars No.	b bars Lgth.	Reinf. Lbs.	DIMENSIONS											"A" Conc. C.Y.	Steel – 1/2"φ bars a bars No.	a bars Lgth.	b bars No.	b bars Lgth.	Reinf. Lbs.
	A	B	C	E	F	G	K	L	M							A	B	C	E	F	G	L	M	I	J						
18"	6"	6"	3'-6"	7"	2'-0"	6"	2'-0"	7'-0"	1'-8"	0.7	6	4'-0"	5	6'-6"	35	6"	6"	3'-6"	7"	2'-0"	6"	9'-3"	1'-8"	1'-1"	1'-0"	0.95	7	4'-0"	5	9'-0"	50
24"	8"	8"	4'-0"	8"	2'-4"	7"	2'-6"	8'-0"	2'-0"	1.0	6	4'-9"	5	7'-9"	45	8"	8"	4'-0"	8"	2'-4"	7"	11'-0"	2'-0"	1'-6"	1'-3"	1.30	7	4'-9"	5	10'-9"	55
30"	8"	8"	4'-6"	8"	2'-10"	7"	3'-0"	10'-6"	2'-0"	1.4	8	5'-3"	5	10'-3"	60	8"	8"	4'-6"	8"	2'-10"	7"	14'-0"	2'-0"	1'-9"	1'-6"	1.70	9	5'-3"	5	13'-9"	75
36"	12"	8"	5'-0"	8"	3'-4"	7"	3'-6"	13'-0"	2'-4"	2.0	10	6'-0"	5	12'-9"	82	12"	8"	5'-0"	8"	3'-4"	7"	17'-0"	2'-4"	2'-0"	1'-9"	2.45	11	6'-0"	5	16'-9"	100

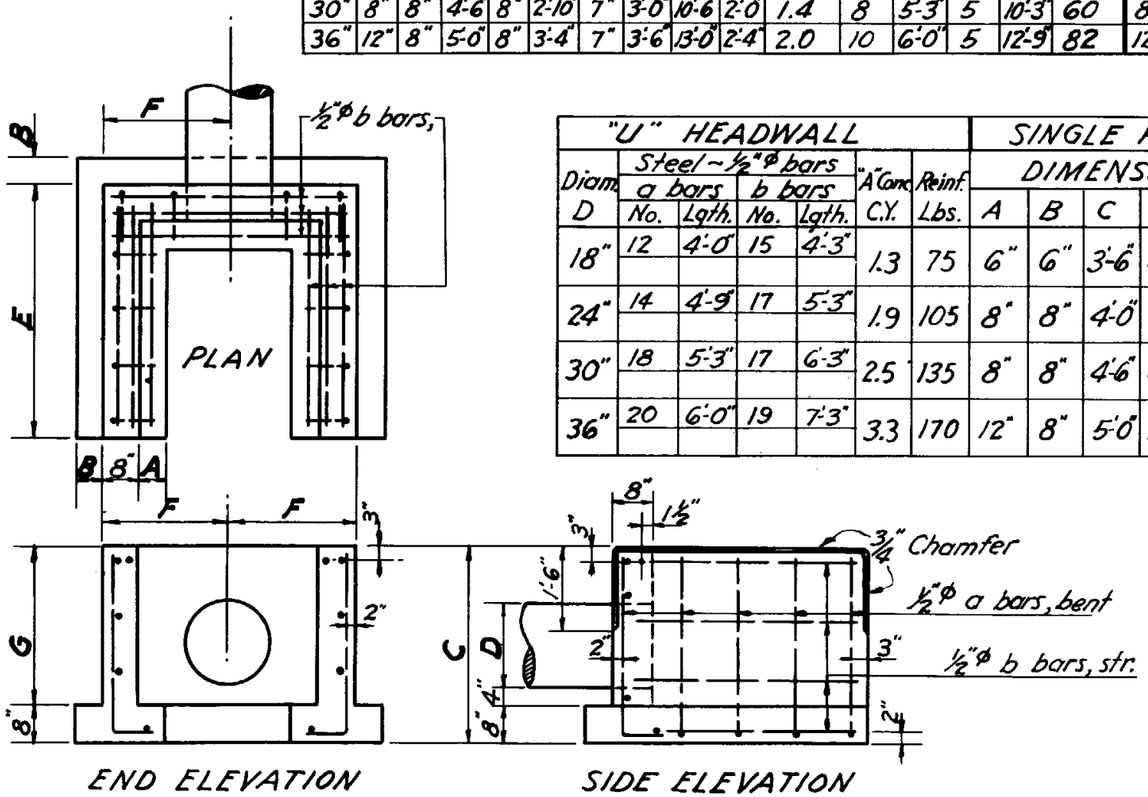

STANDARD "U" TYPE HEADWALL

Scale – 3/8"=1'-0"

"U" HEADWALL							SINGLE PIPES DIMENSIONS						"L" HEADWALL					
Diam. D	Steel – 1/2"φ bars a bars No.	a bars Lgth.	b bars No.	b bars Lgth.	"A" Conc. C.Y.	Reinf. Lbs.	A	B	C	E	F	G	"A" Conc. C.Y.	Reinf. Lbs.	Steel – 1/2"φ bars a bars No.	a bars Lgth.	b bars No.	b bars Lgth.
18"	12	4'-0"	15	4'-3"	1.3	75	6"	6"	3'-6"	4'-6"	2'-3"	2'-10"	1.0	55	9	4'-0"	5	5'-6"
																	5	4'-3"
24"	14	4'-9"	17	5'-3"	1.9	105	8"	8"	4'-0"	5'-6"	2'-9"	3'-4"	1.5	75	11	4'-9"	5	6'-6"
																	6	5'-3"
30"	18	5'-3"	17	6'-3"	2.5	135	8"	8"	4'-6"	6'-6"	3'-3"	3'-10"	2.0	95	13	5'-3"	5	8'-3"
																	6	6'-3"
36"	20	6'-0"	19	7'-3"	3.3	170	12"	8"	5'-0"	7'-6"	3'-9"	4'-4"	2.6	125	15	6'-0"	5	10'-0"
																	7	7'-3"

Note:
Std. "L" Hdwll. is made up of 1/2 "U" and 1/2 Str. Hdwll.

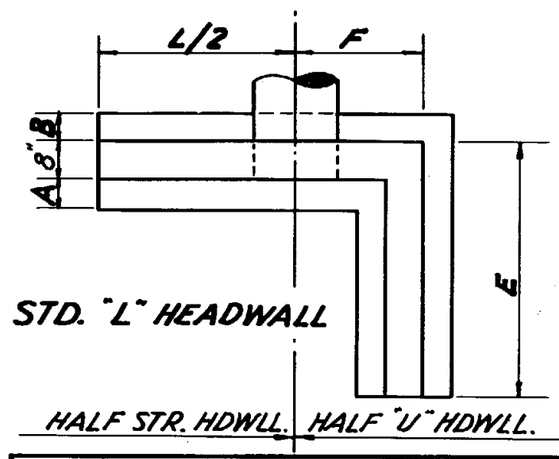

ARIZONA HIGHWAY DEPARTMENT

PLANS DIVISION

REV. 3-20-50

STRAIGHT, "L" AND "U" TYPE REINF. CONCRETE HEADWALLS

DRAWN	GH Nov. 1945	DRAWING NO.
TRACED	GH Nov. 1945	C-9
CHECKED	HHW	
APPROVED PLANS ENGR.	HH Wessel	

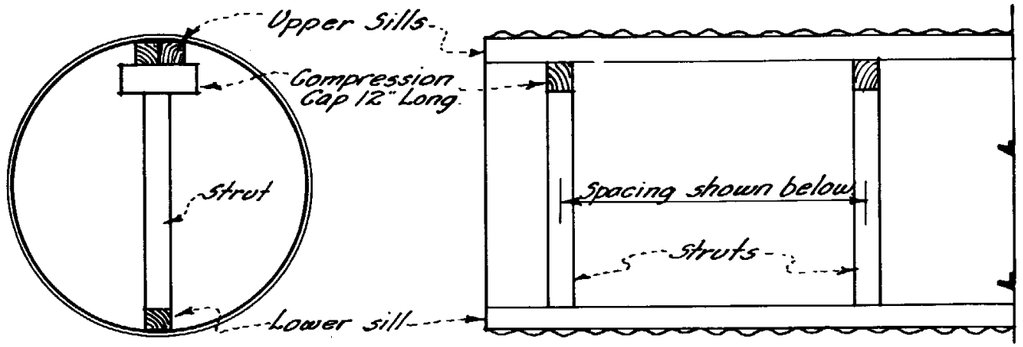

METHOD OF PLACING STRUTS.

Compression caps to be of soft wood to allow compression. Top and bottom sills and comp. caps shall be same size as struts.

STRUTS FOR FULL CIRCLE C.M.P. VERT. DIAM. + 3%									
Diam. In.	1' to 5' fill		5' to 10' Fill		10' to 20' fill		20' to 30' fill		Length of strut
	Size In.	Space Ft.	Size In.	Space Ft.	Size In.	Space Ft.	Size In.	Space Ft.	
48	4x4	6	4x4	6	4x4	6	4x4	6	4"x4" – 3'-2 3/8"
54	4x4	6	4x4	6	4x4	6	4x4	6	4"x4" – 3'-8 3/4"
60	4x4	6	4x4	6	4x4	6	4x4	6	4"x4" – 4'-3"
66	4x4	6	4x4	6	4x4	6	4x4	6	4"x4" – 4'-9 1/4"
72	4x4	6	4x4	6	4x4	6	4x4	5	4"x4" – 5'-3 5/8"
78	4x4	6	4x4	6	4x4	6	4x4	4.5	4"x4" – 5'-9 7/8"
84	4x4	6	4x4	6	4x4	6	4x4	4	4"x4" – 6'-4 1/4"
90	4x4	6	4x4	6	4x4	5.5	4x4	3.5	4"x4" – 6'-10 1/2"
96	4x4	6	4x4	6	4x4	5	4x4	3.5	4"x4" – 7'-4 3/4"

No struts will be required for 48" C.M.P. for fills of less than 15 feet unless so noted on plans.

ONE HEADWALL STEEL LIST – 84" to 66"

Mark	Size	Bend	84" No.	84" Lgth.	78" No.	78" Lgth.	72" No.	72" Lgth.	66" No.	66" Lgth.
a	1/2"φ	A	2	3'-6"	2	3'-6"	2	3'-6"	2	3'-6"
a1	"	"	2	4'-0"	2	4'-0"	2	4'-0"	2	4'-0"
a2	"	"	2	4'-6"	2	4'-6"	2	4'-6"	2	4'-6"
a3	"	"	2	5'-3"	2	5'-3"	2	5'-3"	2	5'-3"
a4	"	"	2	5'-9"	2	5'-9"	2	5'-9"	2	5'-9"
a5	"	"	2	6'-3"	2	6'-3"	2	6'-3"	2	6'-3"
a6	"	"	2	6'-9"	2	6'-9"	2	6'-9"	2	6'-9"
a7	"	"	2	7'-6"	2	7'-6"	2	7'-6"		
a8	"	"	2	8'-0"	2	8'-0"				
a9	"	"	2	8'-6"						
b	"	Str.	6	9'-9"	6	9'-0"	6	8'-0"	6	7'-0"
b1	"	"	2	7'-9"	2	7'-0"	2	6'-0"	2	5'-0"
b2	"	"	2	6'-0"	2	5'-0"	2	4'-3"	2	3'-3"
b3	"	"	2	4'-0"	2	3'-6"	2	2'-6"	2	1'-9"
b4	"	"	2	2'-6"	2	1'-9"				
c	"	C	8	10'-9"	7	10'-0"	7	9'-3"	6	8'-6"
c1	"	"	2	10'-3"	2	9'-9"	2	8'-6"	2	8'-3"
c2	"	"	2	8'-9"	2	8'-3"	2	7'-0"	2	6'-9"
c3	"	"	2	7'-0"	2	6'-9"	2	5'-6"	2	5'-3"
c4	"	"	2	5'-6"	2	5'-0"	2	4'-0"	2	3'-9"
c5	"	"	2	4'-0"						
d	"	Str.	1	19'-0"	1	17'-6"	1	16'-0"	1	14'-6"
d1	"	"	1	18'-0"	1	16'-6"	1	15'-0"	1	13'-6"
d2	"	"	1	16'-6"	1	15'-0"	1	13'-6"	1	12'-0"
d3	"	"	1	15'-0"	1	13'-6"	1	12'-0"	1	11'-0"
d4	"	"	1	14'-0"	1	12'-6"	1	11'-0"	1	9'-6"
d5	"	"	1	12'-6"	1	11'-0"	1	9'-6"	1	8'-0"
d6	"	"	1	11'-6"	1	10'-0"	1	8'-6"	1	7'-0"
d7	"	"	1	10'-0"	1	8'-6"				
d8	"	"	1	8'-6"						
e	"	E	4	12'-3"	4	11'-3"	4	10'-3"	4	9'-3"
f	"	Str.	2	7'-6"	2	7'-0"	2	6'-6"	2	6'-0"
g	"	"	2	7'-3"	2	6'-9"	2	6'-3"	2	5'-9"
h	"	"	1	19'-0"	1	17'-6"	1	16'-0"	1	14'-6"

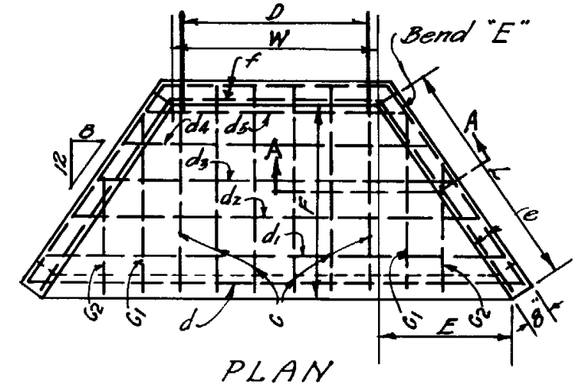

PLAN

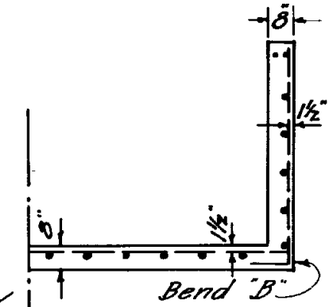

SEC. A-A.

All bars ½"φ @ 12" centers.

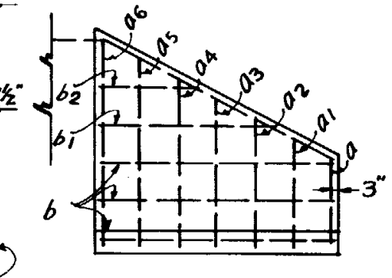

WING WALL REINFORCING.

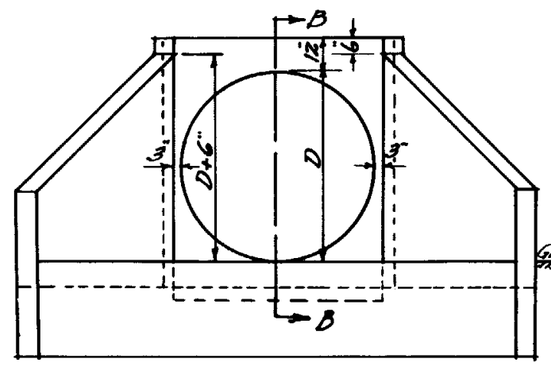

ELEVATION

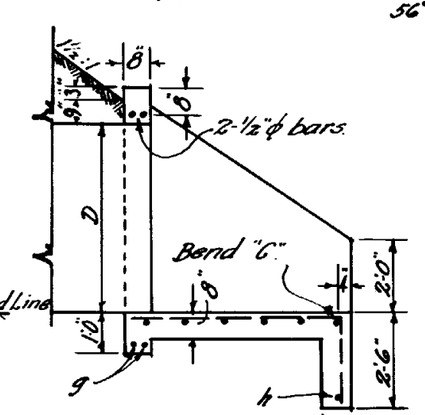

SEC. B-B.

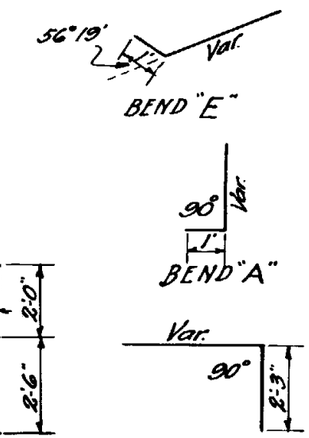

WING TYPE HEADWALL DETAILS

Drawn for 60" C.M.P.
Scale ¼" = 1'-0"

ONE HEADWALL STEEL LIST – 60" to 42"

Mark	Size	Bend	60" No.	60" Lgth.	54" No.	54" Lgth.	48" No.	48" Lgth.	42" No.	42" Lgth.
a	1/2"φ	A	2	3'-6"	2	3'-6"	2	3'-6"	2	3'-6"
a1	"	A	2	4'-0"	2	4'-0"	2	4'-0"	2	4'-0"
a2	"	A	2	4'-6"	2	4'-6"	2	4'-6"	2	4'-6"
a3	"	A	2	5'-3"	2	5'-3"	2	5'-3"	2	5'-3"
a4	"	A	2	5'-9"	2	5'-9"	2	5'-9"		
a5	"	A	2	6'-3"	2	6'-3"				
a6	"	A	2	6'-9"						
b	"	Str.	6	6'-2"	6	5'-3"	6	4'-4"	6	3'-5"
b1	"	"	2	4'-5"	2	3'-3"	2	2'-7"	2	1'-9"
b2	"	"	2	2'-8"	2	1'-9"				
c2	"	C	2	5'-8"	2	4'-6"	2	4'-11"		
c1	"	C	2	7'-2"	2	6'-1"	2	6'-4"	2	5'-3"
c	"	C	6	7'-11"	6	7'-2"	6	6'-4"	4	5'-8"
d	"	Str.	1	13'-2"	4	11'-8"	1	10'-1"	1	8'-10"
d1	"	"	1	12'-2"	1	10'-7"	1	8'-9"	1	8'-0"
d2	"	"	1	10'-10"	1	9'-3"	1	7'-5"	1	6'-7"
d3	"	"	1	9'-6"	1	7'-11"	1	6'-1"	1	5'-4"
d4	"	"	1	8'-2"	1	6'-7"				
d5	"	"	1	6'-10"						
e	"	E	4	8'-1"	4	7'-0"	4	6'-0"	4	5'-1"
f	"	Str.	2	5'-6"	2	5'-0"	2	4'-6"	2	4'-0"
g	"	"	2	5'-2"	2	4'-8"	2	4'-2"	2	3'-8"
h	"	"	1	13'-4"	1	11'-10"	1	10'-4"	1	8'-10"

Note Dimension W to be increased to take care of increased width or length due to skew. Quantities are for 1 headwall only.

WING TYPE HEADWALL

SINGLE PIPES							
D	Dimensions L	E	F	W	Water Way	Conc. C.Y.	Steel Lbs.
42"	3'-7 1/4"	2'-0"	3'-0"	4'-0"	9.6	1.90	115
48"	4'-6"	2'-6"	3'-9"	4'-6"	12.6	2.46	140
54"	5'-4 7/8"	3'-0"	4'-6"	5'-0"	15.9	3.07	175
60"	6'-3 3/4"	3'-6"	5'-3"	5'-6"	19.6	3.75	215
66"	7'-2 1/2"	4'-0"	6'-0"	6'-0"	23.8	4.37	255
72"	8'-1 3/8"	4'-6"	6'-9"	6'-6"	28.3	5.16	295
78"	9'-0 1/4"	5'-0"	7'-6"	7'-0"	33.2	6.00	340
84"	9'-11"	5'-6"	8'-3"	7'-6"	38.5	6.91	395

ARIZONA HIGHWAY DEPARTMENT
PLANS DIVISION

HEADWALLS AND STRUTS FOR C.M.P.'S 42" TO 84" DIA.

REV. 66"-84" Added 5-12-47 6-10-55

DRAWN BY	W.M.D.	FEB., 1936	DRAWING NO.
TRACED BY	K.S.	JUNE, 1938	C-10
CHECKED BY	H.M.W.	JULY 1938	
APPROVED ENGR. OF PLANS	[signature]		

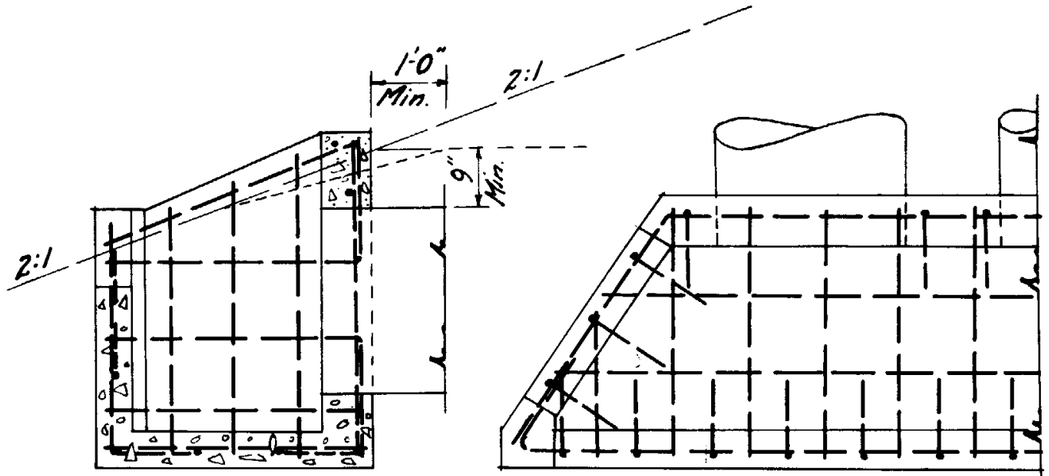

SECTION "Z-Z"

PLAN

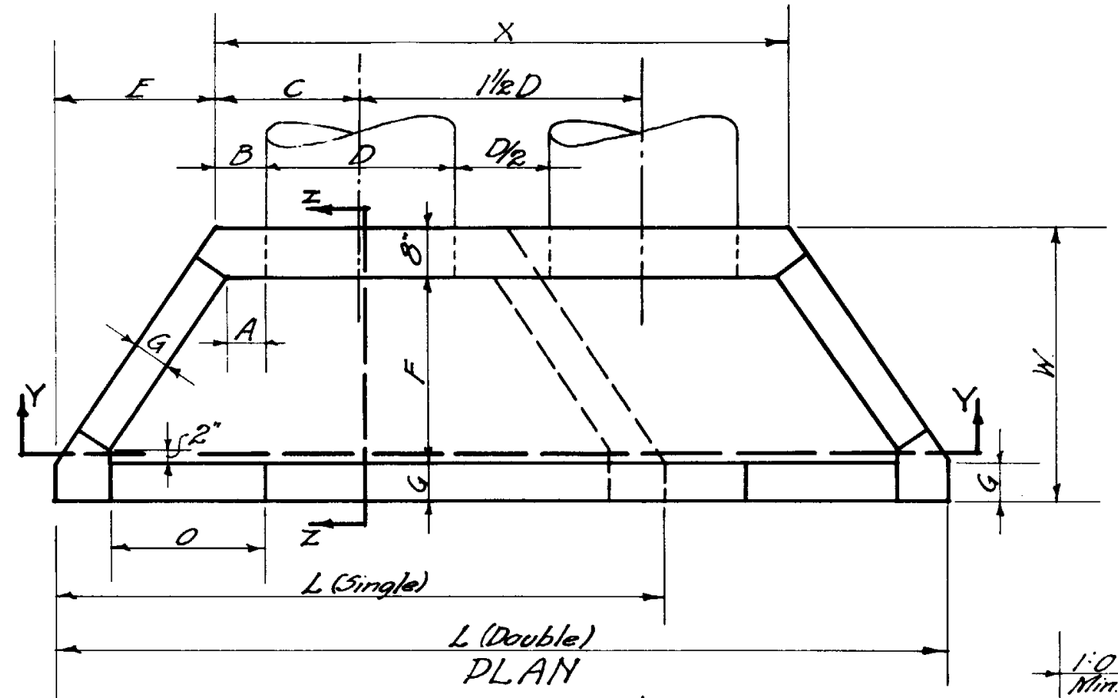

PLAN

Note – All reinforcing to be ½" ϕ deformed bars approx. 12" o.c.

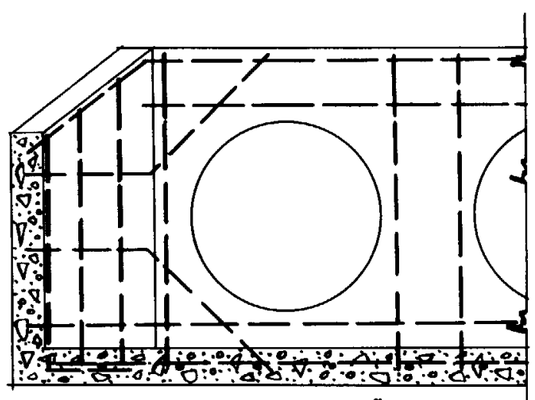

SECTION "Y-Y"

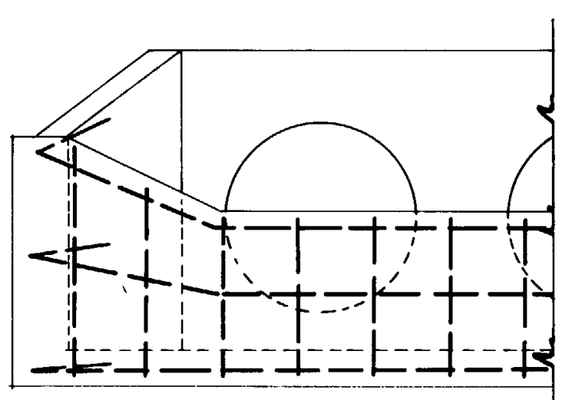

FRONT

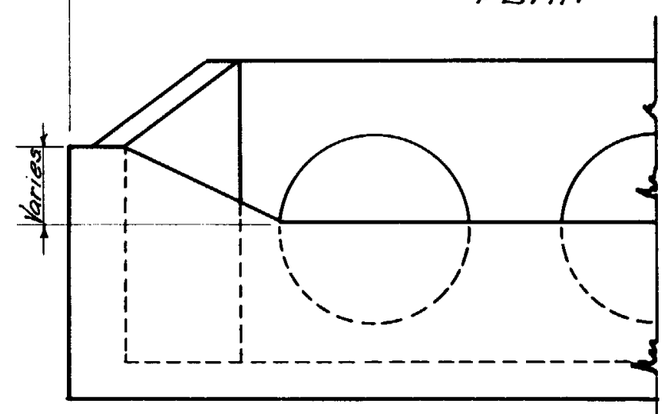

FRONT

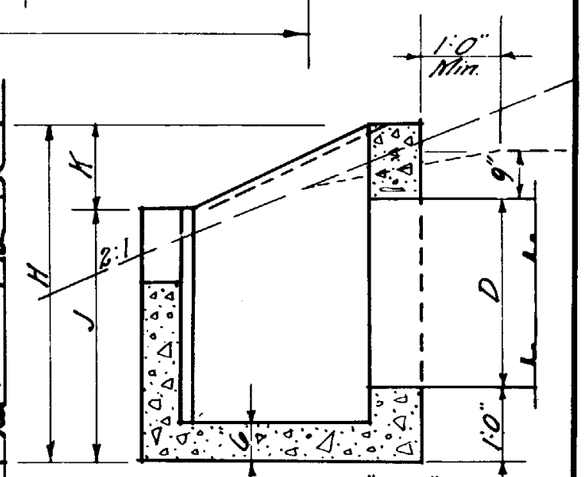

SECTION "Z-Z"

Pipe D	Dimensions L Single	L Double	X Single	X Double	W	A	B	C	E	F	G	H	J	K	O	Quantities Class A Conc. C.Y. Single	Class A Conc. C.Y. Double	Reinf. Steel Single	Reinf. Steel Double
18"	5'-0"	7'-3"	2'-4"	4'-7"	2'-6"	3"	5"	1'-2"	1'-4"	1'-4"	6"	3'-6"	2'-9"	9"	1'-0"	.67	.94	65#	110#
24"	6'-9¼"	9'-9¼"	3'-4"	6'-4"	3'-1"	6"	8"	1'-8"	1'-8⅝"	1'-11"	6"	4'-0"	3'-1"	11"	1'-6"	1.07	1.48	90#	150#
30"	8'-0¾"	11'-9¾"	3'-10"	7'-7"	3'-8"	6"	8"	1'-11"	2'-1⅜"	2'-6"	6"	4'-6"	3'-5"	1'-1"	2'-0"	1.41	2.09	115#	165#
36"	9'-4"	13'-10"	4'-4"	8'-10"	4'-3"	6"	8"	2'-2"	2'-6"	3'-1"	6"	5'-0"	3'-8"	1'-4"	2'-6"	1.88	2.78	135#	195#
42"	10'-9¼"	16'-0¼"	5'-0"	10'-3"	4'-11"	6"	8"	2'-6"	2'-10⅝"	3'-8"	7"	5'-6"	4'-0"	1'-6"	2'-9"	2.64	3.78	196#	268#

ARIZONA HIGHWAY DEPARTMENT

PLANS DIVISION

REV.

DROP INLET HEADWALLS

DRAWN	K.S. Oct. 1939	DRAWING NO.
TRACED	K.S. Oct. 1939	C-11
CHECKED	HHWe	
APPROVED PLANS ENG'R.	HHWessel	

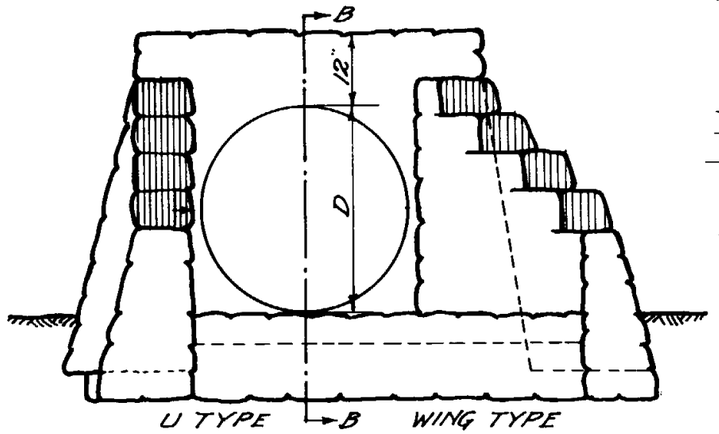

ELEVATION

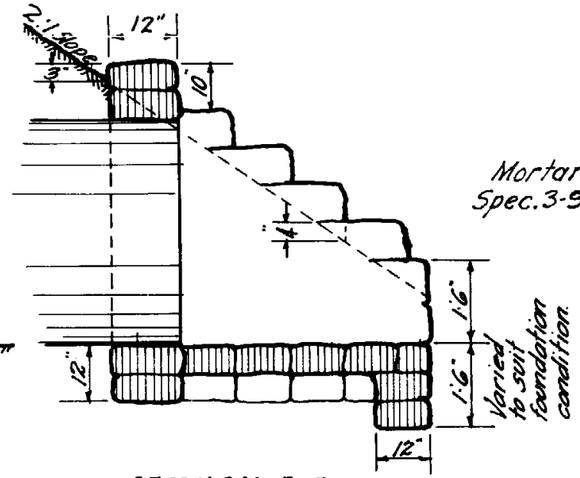

SECTION B-B

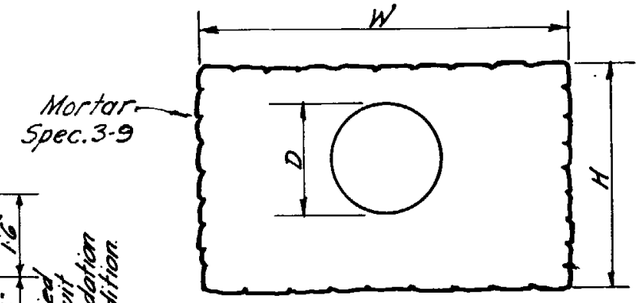

ELEVATION SINGLE

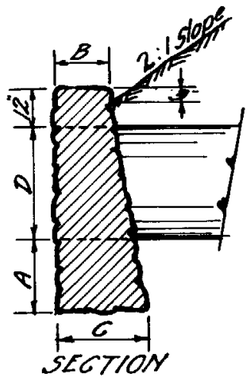

SECTION

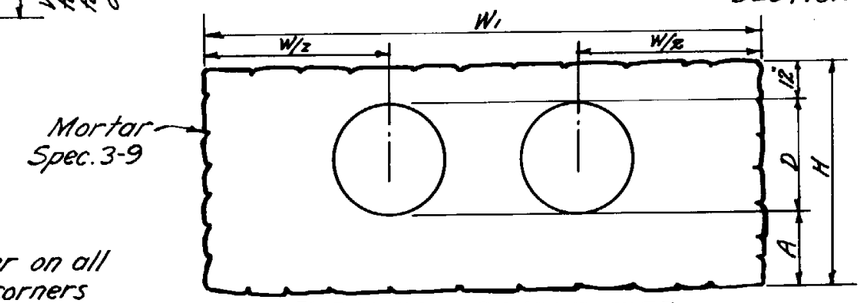

ELEVATION DOUBLE PIPE.

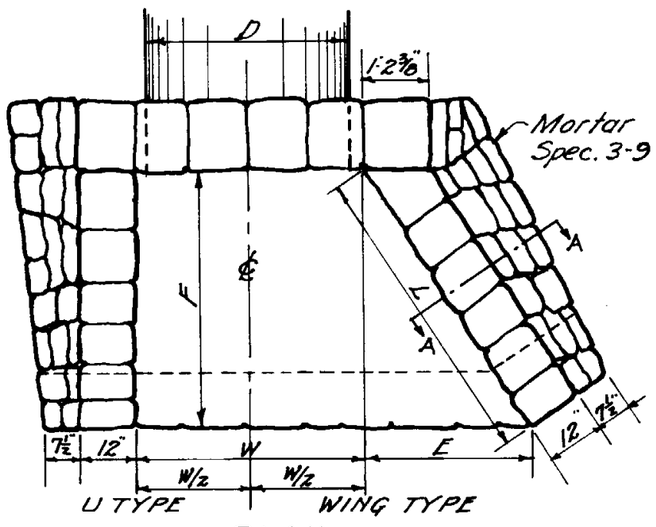

PLAN

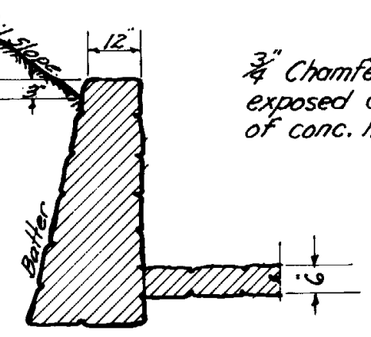

SECTION A-A.

3/4" Chamfer on all exposed corners of conc. headwalls.

STRAIGHT TYPE HEADWALLS

Diam.	Dimensions				Single Pipe		Double Pipe	
D	A	B	G	H	W	Cu. Yds.	W1	Cu. Yds.
18"	1'-0"	1'-0"	1'-4"	3'-11"	7'-0"	1.11	9'-8"	1.49
24"	1'-4"	1'-0"	1'-8"	4'-10"	8'-0"	1.75	11'-6"	2.43
30"	1'-8"	1'-0"	2'-0"	5'-9"	10'-6"	3.08	14'-7"	4.11
36"	2'-0"	1'-0"	2'-4"	6'-8"	13'-0"	5.05	17'-8"	6.58

Note— Quantities are for one headwall only.

A.S.T.M. MIN. SHELL THICKNESS OF CONCRETE PIPE

In. Diam.	Shell Thickness
18"	2"
24"	3"
30"	3 1/2"
36"	4"
42"	4 1/2"
48"	5"
54"	5 1/2"
60"	6"

WING AND U TYPE HEADWALLS

Dimensions				Single Pipe				Double Pipe			
Diam. D	Wing Type L	Wing Type E	F	W	Waterway Area S.F.	U Type Cu. Yds.	Wing Type Cu. Yds.	W	Waterway Area S.F.	U Type Cu. Yds.	Wing Type Cu. Yds.
30"	2'-8 1/2"	1'-6"	2'-3"	3'-7"	4.91	2.52	2.57	7'-8"	9.82	3.43	3.48
36"	3'-7 1/8"	2'-0"	3'-0"	4'-2"	7.07	3.36	3.56	8'-10"	14.14	4.51	4.71
42"	4'-6"	2'-6"	3'-9"	4'-9"	9.62	4.31	4.71	10'-0"	19.24	5.73	6.13
48"	5'-5"	3'-0"	4'-6"	5'-4"	12.56	5.40	6.03	11'-2"	25.12	7.17	7.74
54"	6'-3 1/2"	3'-6"	5'-3"	5'-11"	15.90	6.66	7.53	12'-4"	31.80	8.70	9.57
60"	7'-2 1/2"	4'-0"	6'-0"	6'-6"	19.63	8.05	9.21	13'-6"	39.26	10.44	11.59

Note— Dimensions and quantities shown are calculated on a basis of using concrete pipe. See table for shell thickness of various sizes of pipe. Dimension W to be increased to take care of increased width or length due to skew.

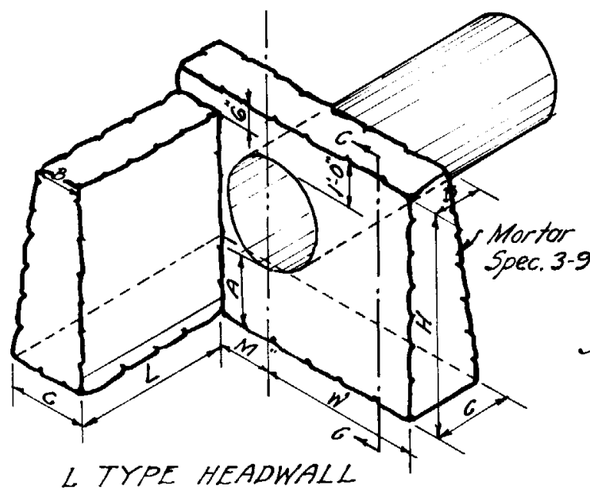

L TYPE HEADWALL

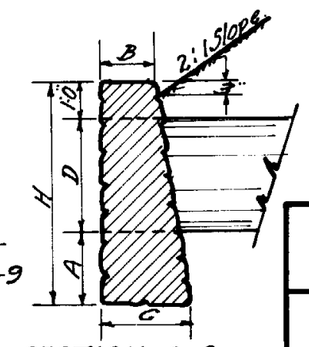

SECTION G-G.

L TYPE HEADWALLS

Diam.	Dimensions							
D	A	B	G	H	W	L	Cu. Yds.	M
18"	1'-0"	1'-0"	1'-4"	3'-11"	3'-6"	4'-6"	1.60	1'-3"
24"	1'-4"	1'-0"	1'-8"	4'-10"	4'-0"	5'-6"	2.66	1'-7"
30"	1'-8"	1'-0"	2'-0"	5'-9"	5'-3"	6'-6"	4.36	1'-10"
36"	2'-0"	1'-0"	2'-4"	6'-8"	6'-6"	7'-6"	6.69	2'-2"

ARIZONA HIGHWAY DEPARTMENT

PLANS DIVISION

HEADWALLS PLAIN CONCRETE OR CEM. RUBBLE MASONRY

DRAWN BY	B.P.R. DRAWING 1936	
TRACED BY	K.S. JUNE, 1938	
CHECKED BY	H.H.W JULY 1938	
APPROVED ENGR. OF PLANS	H.H. Wessel	

DRAWING NO. C-12

REV. Nov. 1945

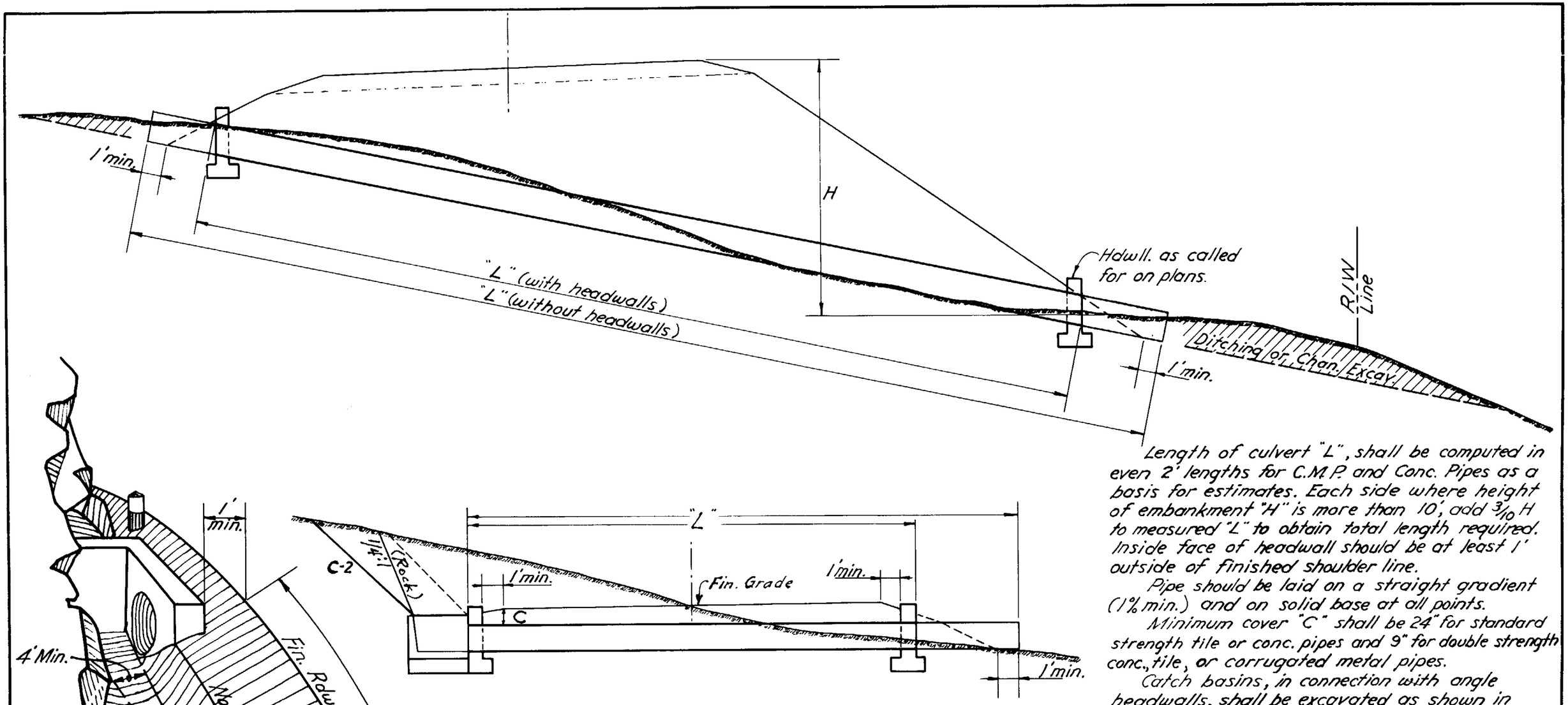

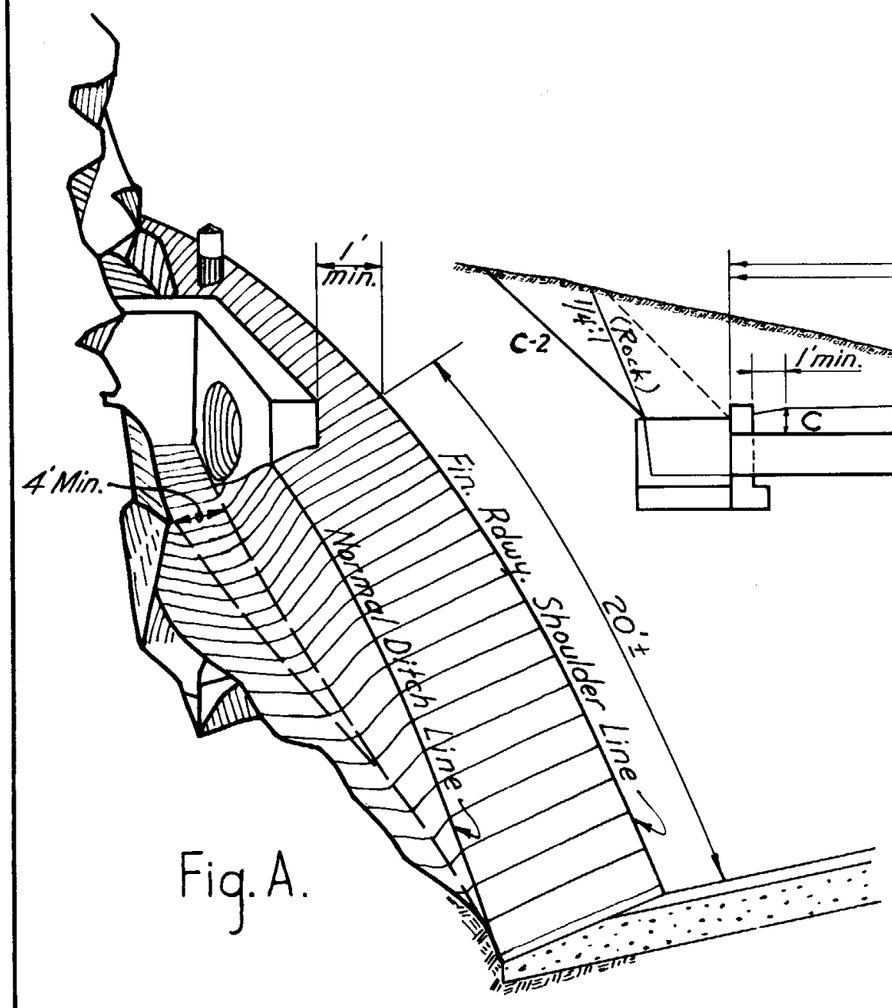

Fig. A.

Length of culvert "L", shall be computed in even 2' lengths for C.M.P. and Conc. Pipes as a basis for estimates. Each side where height of embankment "H" is more than 10', add 3/10 H to measured "L" to obtain total length required. Inside face of headwall should be at least 1' outside of finished shoulder line.

Pipe should be laid on a straight gradient (1% min.) and on solid base at all points.

Minimum cover "C" shall be 24" for standard strength tile or conc. pipes and 9" for double strength conc., tile, or corrugated metal pipes.

Catch basins, in connection with angle headwalls, shall be excavated as shown in Fig. A and classed as channel excavation

Warp embankment slopes at pipe culvert to 2:1 where Std. C-2 calls for flatter slopes.

ARIZONA HIGHWAY DEPARTMENT

PLANS DIVISION

REV. 3-20-50

PIPE CULVERT INSTALLATION

DRAWN	GH Nov. 1945	DRAWING NO.
TRACED	GH Nov. 1945	C-13
CHECKED	HHWessel	
APPROVED PLANS ENGR.	HHWessel	

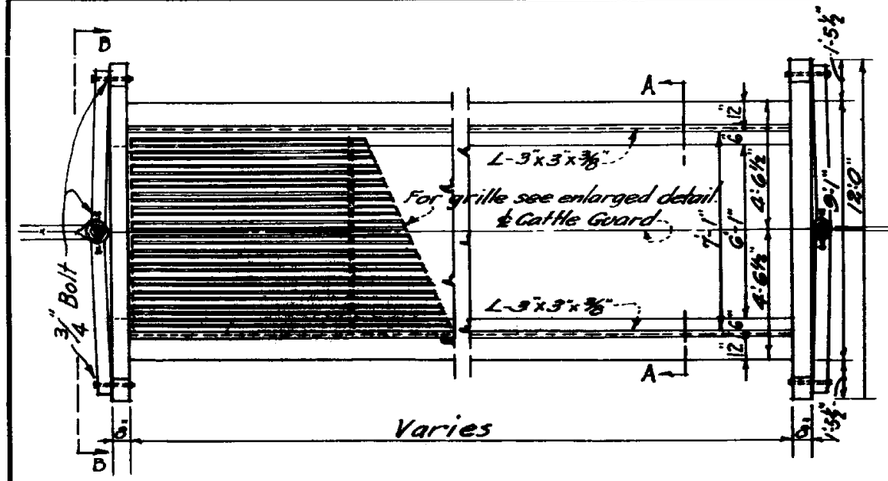

GENERAL PLAN.

Paint Note:-
Shop Coat - All rails and structural steel to be painted 1 coat paint No. 1
All posts 1 coat paint No. 7 and 1 coat paint No. 8.

Round all exposed corners as shown unless otherwise noted.

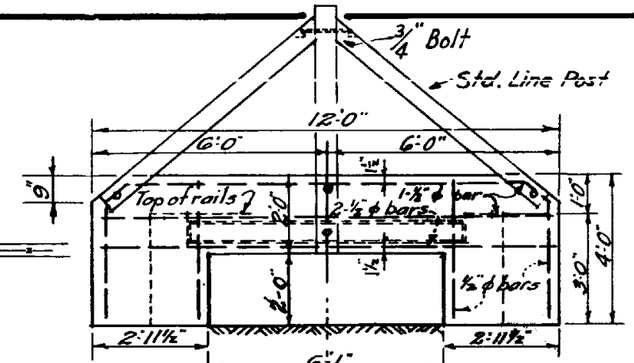

ELEVATION "B-B"

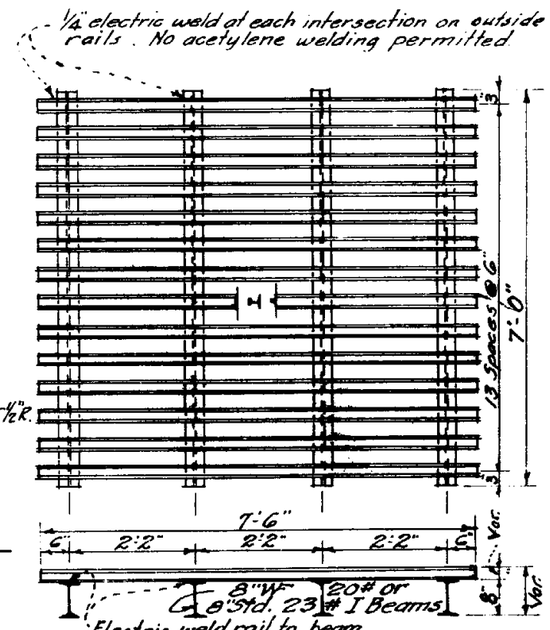

DETAIL OF WELDED GRILLE UNIT

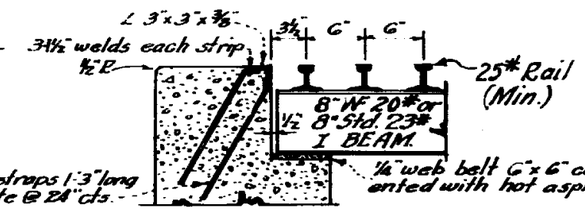

PART SECTION A-A.
Rail Treads.

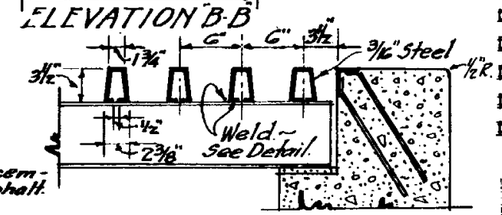

PART SECTION A-A.
U Type Treads.

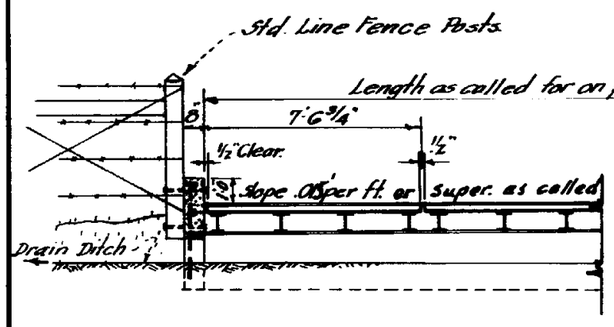

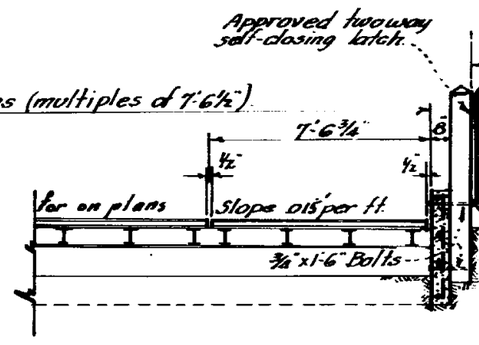

SECTION ON CENTER LINE FOR ANY WIDTH ROADWAY.

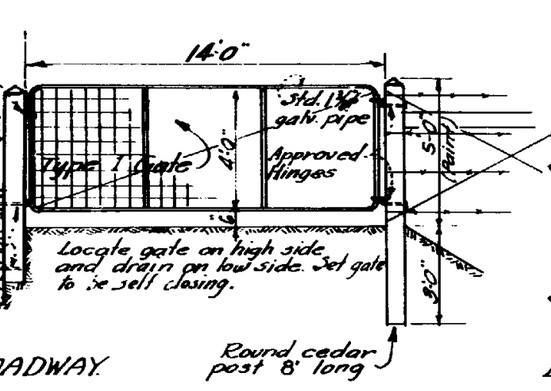

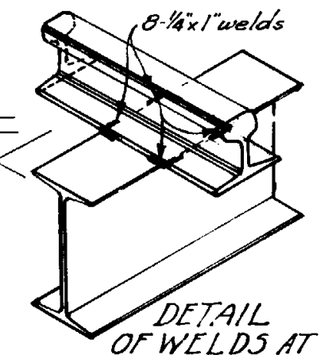

DETAIL OF WELDS AT EACH INTERSECTION.
Typical for Rail or U Treads.

NOTE: Second hand rails may be used providing they are clean, free from rust scales, of uniform cross section and weighing at least 95% of original nominal weight, 25 lbs. Min.

MATERIAL LIST					
Item	Pcs.	Size	Length	Steel #	Conc. C.Y.
Common to all guard lengths.					
Post, Round cedar	2		6'-6" min.		
" " "	5		8'-0" "		
Bolts	10	3/4" ϕ	1'-6"		
Reinf. Bars	8	1/2" ϕ	11'-6"	60.70	
" "	8	"	3'-6"	18.48	
Gate	1	4'-0" x 12'-0"		Complete.	
6 Unit - 40' Roadway					
Concrete					14.9
Fabricated L	2	3"x3"x3/8"x45'-4"			
Web Belting	48	6"x6"x1/4"			
5 Unit - 34' Roadway					
Concrete					12.71
Fabricated L	2	3"x3"x3/8"x37'-9"			
Web belting	40	6"x6"x1/4"			
4 Unit - 26' & 28' Roadway.					
Concrete					10.53
Fabricated L	2	3"x3"x3/8"x30'-2½"			
Web Belting	32	6"x6"x1/4"			
2 Unit - SIDEROAD					
Concrete					5.23
Fabricated L	2	3"x3"x3/8"x15'-1"			
Web belting	16	6"x6"x1/4"			

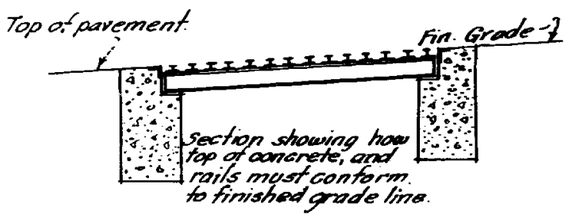

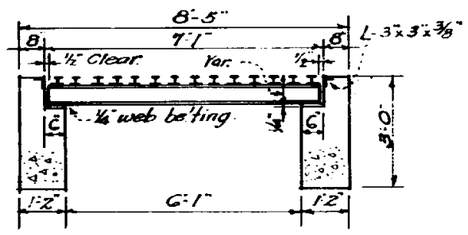

FOR SIDEROAD ONLY.

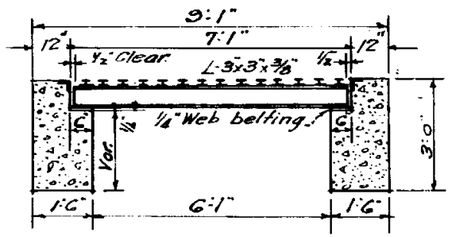

FOR ROADWAYS OF 24' OR MORE
SECTION A-A.

ARIZONA HIGHWAY DEPARTMENT
PLANS DIVISION

CATTLE GUARDS

DRAWN	W.M.D. MAY, 1936	DRAWING NO.
TRACED	K.S. JUNE, 1938	C-14
CHECKED	HHW Jul 4 1938	
APPROVED ENGR. PLANS		

REV.
Weld 3/15/41
I-Beam 6/3/47
3-20-50 U Treads Buffers I Beams
3/6/52

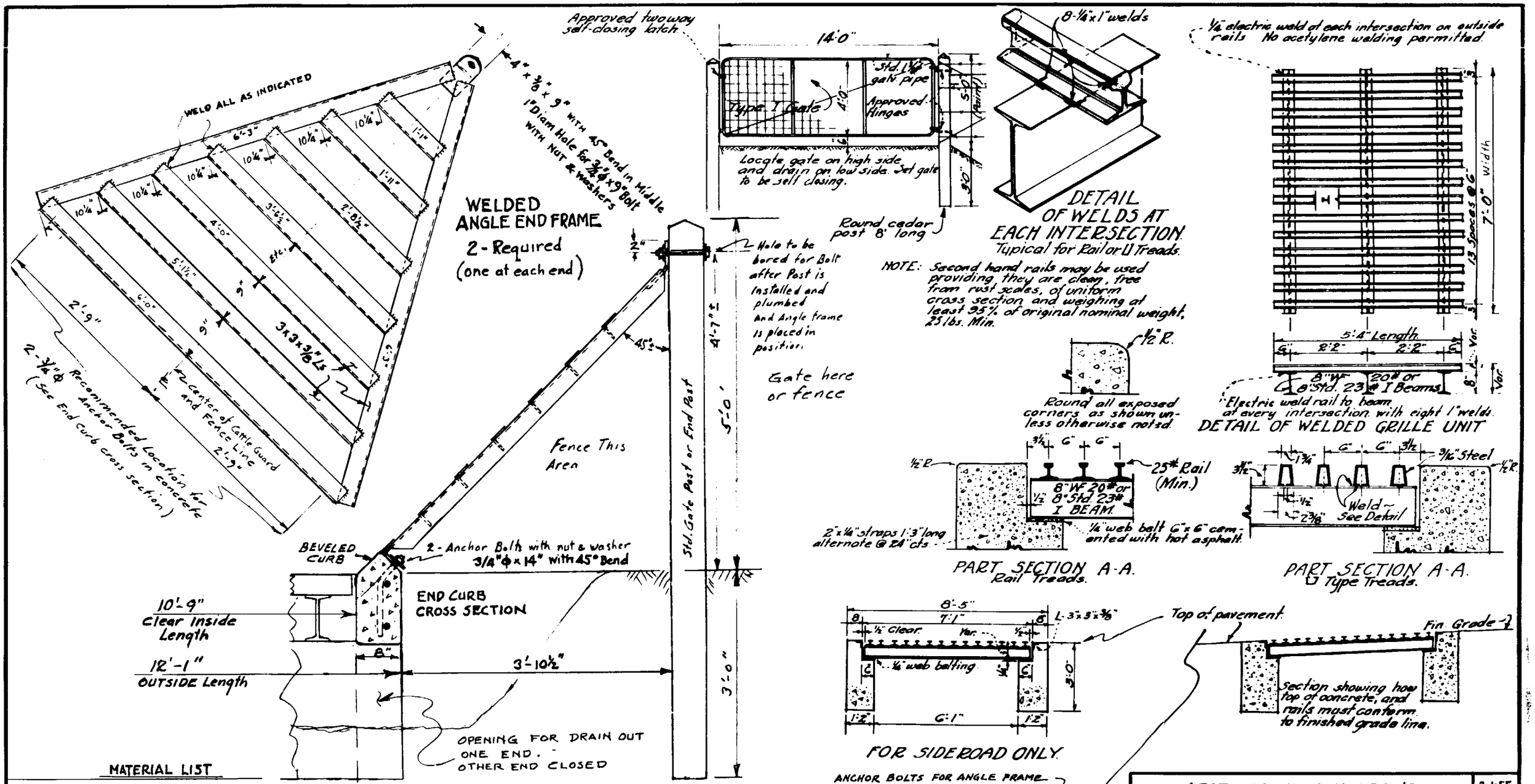

MATERIAL LIST

ITEM	REQUIRED	DESCRIPTION
POSTS, FOR FENCE OR GATE	3	ROUND CEDAR
BOLTS, WITH NUT & WASHERS	2	3/4"φ x 9" Straight
" " " "	4	3/4"φ x 14", 45° Bend Mid Point (Anchor Bolts)
GATE, WITH HINGES & LATCH	1	TYPE I GATE FOR 14' OPENING, SEE DETAIL
REINFORCING BARS	4	1/2"φ x 8'-2" Straight Steel Aggregate Weight, 22 Lbs.
" "	8	1/2"φ x 2'-10" " " " " , 15 Lbs.
" "	6	1/2"φ x 11'-9" " " " " 47 "
STD. WELDED GRILL UNIT	2	SEE DETAILS (UPPER RIGHT) Approximate weight 2200 Lbs
WELDED ANGLE END FRAME	2	SEE DETAILS (DIRECTLY ABOVE) Approx. Weight (2 Units) 560 Lbs.
WEB BELTING, GRILL SHIMS	12	6"x6"x1/4" (see details center right)
CONCRETE	~	CLASS A Total Cubic Yards 3.33

ARIZONA HIGHWAY DEP'T.
PLANS DIVISION

RANCH CATTLE GUARD

2-1-55
8-17-55

MODIFICATION DESIGN BY: Leslie McDougall 5/15/54

APPROVED Engr. of Plans: H H Wessel

STD. DRAWING NO. C-14X

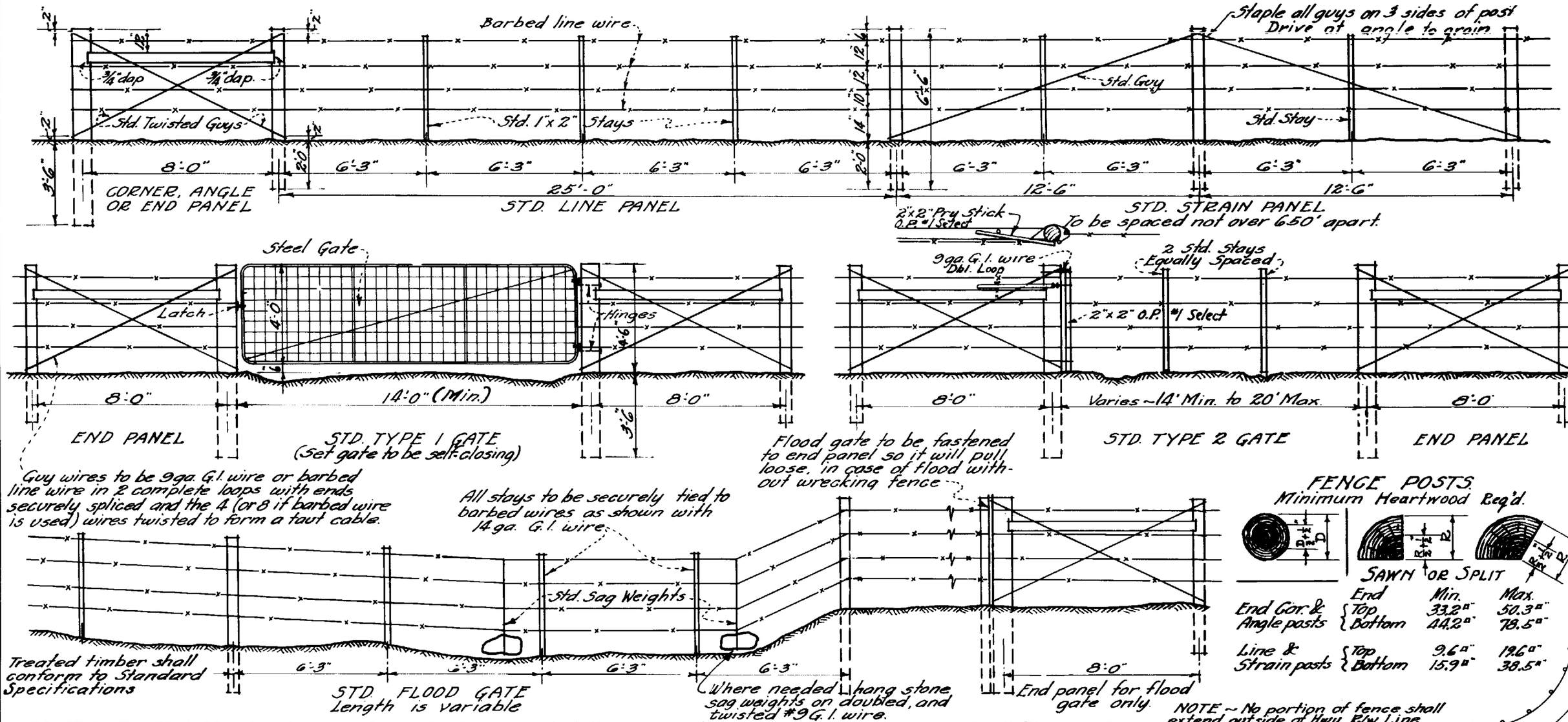

FENCE POSTS
Minimum Heartwood Req'd.

		End	Min.	Max.
End Cor. & Angle posts		Top	33.2□"	50.3□"
		Bottom	44.2□"	78.5□"
Line & Strain posts		Top	9.6□"	19.6□"
		Bottom	15.9□"	38.5□"

NOTE ~ No portion of fence shall extend outside of Hwy. R/W Line.

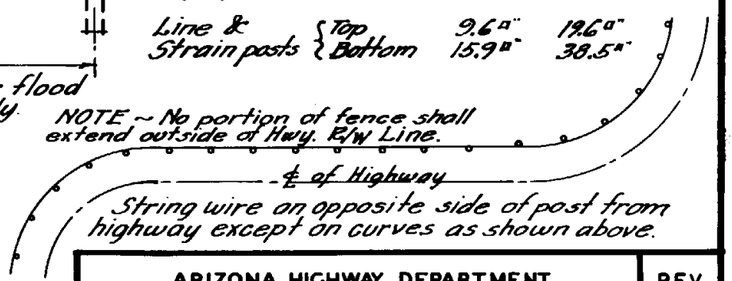

String wire on opposite side of post from highway except on curves as shown above.

LIST OF MATERIALS

ITEM	SPECIFICATION
End, corner & Angle Posts	Native Juniper, Native Cedar or Native Cypress. 8' long - 6½" to 8" top diam. - 7½" to 10" butt diam. or Treated Timber 6"x 6"x 8'-0"
Line & Strain Posts	Native Juniper, Native Cedar or Native Cypress. 6'-6" Long - 3½" to 5" top diam - 4½" to 7" butt diam. or Treated Timber 4"x 4"x 6'-6"
Gate Post #1 Gate	Native Juniper, Native Cedar or Native Cypress. 8' long - 8" Min. diam. or Treated Timber 6"x 6"x 8'-0"
Barbed line wire	G.I. Barbed Cattle wire 12 or 12½ ga. - 14 gauge round barbs @ 5" ± intervals.
Fence Stays.	Rough Sawed Yellow Pine - 1"x 2"x 4'-4"
End panel braces	Native Juniper, Cedar or Cypress - 4" to 6" diam. or Treated Timber - 4"x 4"
End Piece #2 Gate	Rough Sawed O.P. #1 Select 2"x 2"x 4'-6"

ITEM	SPECIFICATION
Type 1 Gate.	Frame - 1⅜" diam. G.I. Tubing - 2 Vert. braces (G.I.) Filler Fabric - G.I. Mesh □, △, or ◊. - Line wires 11 ga. - Cross wires 12½ ga. - One adjustable diagonal guy from corner to corner. Min. weight of gate - 70 lbs.
Hinges #1 Gate	Approved rustproof malleable iron or steel.
Latch #1 Gate	Approved 2 way self closing rustproofed malleable iron or steel.
Loops #2 Gate	9 ga. Galv. wire.
Sag weights	9 ga. Galv. wire (and stone)
Stay tie wires	14 ga. Galv. wire.
Guy wires	9 ga. Galv. wire.
Staples	1½" polished wire.
Nails for braces	16 d. Galv. wire.

ARIZONA HIGHWAY DEPARTMENT
PLANS DIVISION

LINE FENCE AND GATES WOOD POSTS

DRAWN	K.S	6/1/38
TRACED	K.S	6/1/38
CHECKED	H.H.W.	7/20/38
APPROVED ENGR. PLANS		

DRAWING NO. C-15

REV. Heartwood 3-25-41 Treated Timber 8-1-41 3-20-50

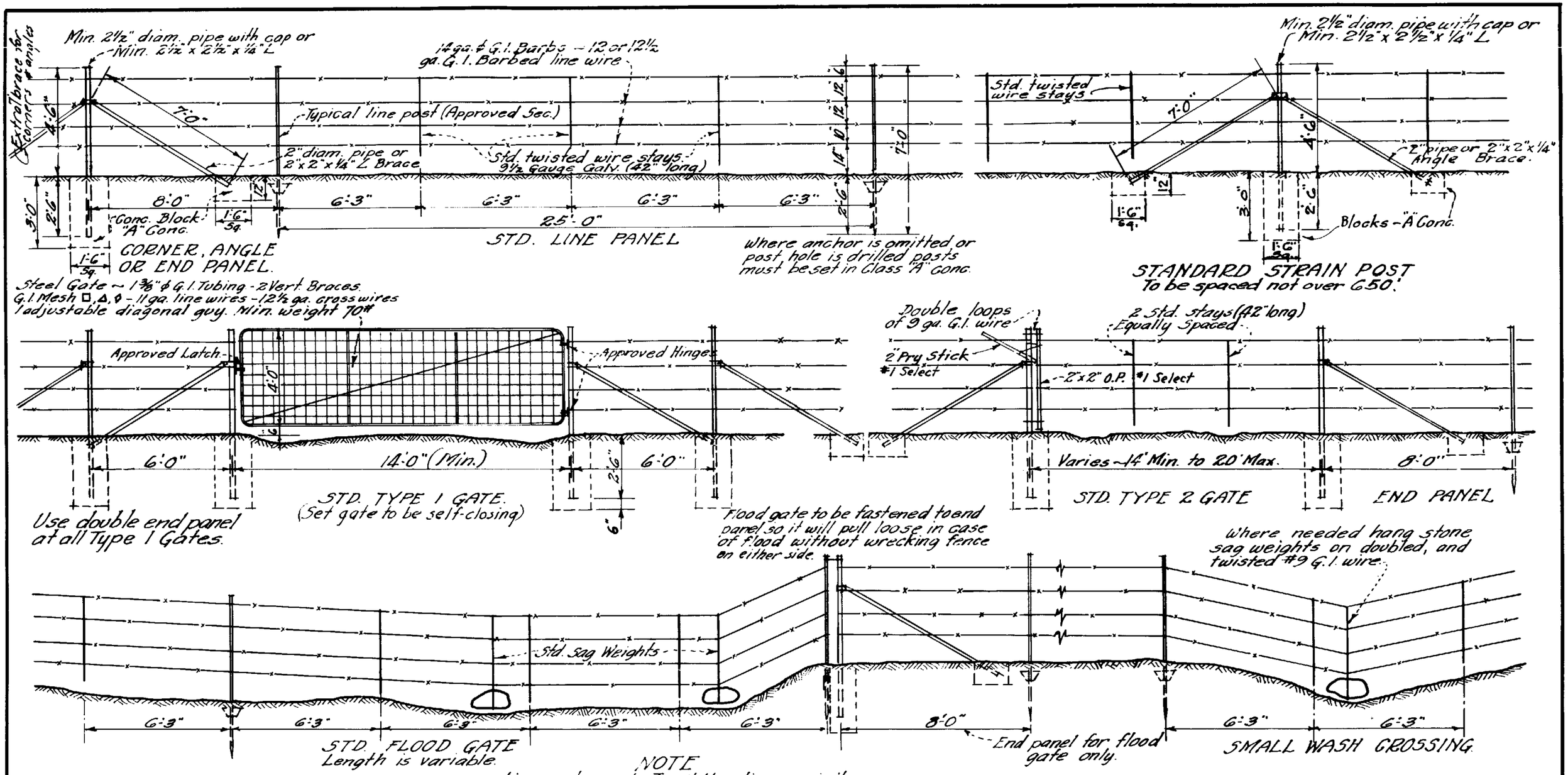

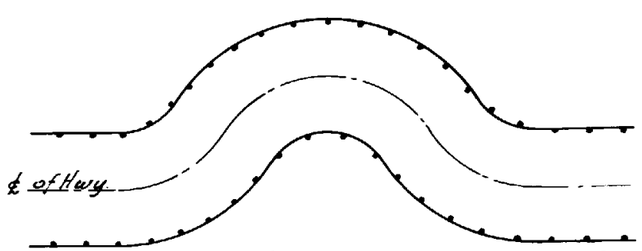

Wire shall be strung on opposite side of post from highway except on curves as shown.
No portion of fence shall extend outside of Highway Right of Way Line.

NOTE

Line posts may be T-rail, U section or similar commercial production (excepting angles or ells). They shall be rail steel grade and rolled from standard section Tee rails or re-rolled rails, both produced by the open hearth process. They shall have punched web, knobs or corrugated edges to hold wire in position and weigh 1.33 lbs. per ft., exclusive of anchor, with a minus variation of 2% allowed. Clamps of 10 gauge (or heavier) galv. wire shall be provided for attaching fence and punched lug type fasteners are not permitted.

All posts and braces shall be painted to manufacturers standard or galvanized.

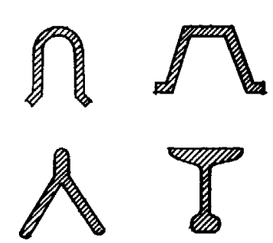

TYPICAL STEEL LINE POST SECTIONS.

ARIZONA HIGHWAY DEPARTMENT
PLANS DIVISION

LINE FENCE AND GATES
STEEL POSTS

DRAWN	K.S.	JUNE, 1938
TRACED	K.S.	JUNE, 1938
CHECKED	H.H.W.	July 1938
APPROVED ENGR. PLANS	[signature]	

DRAWING NO. C-16

REV. Stays 42 5/22/39 Note 2/25/41 Strain Post 6/12/47 3-20-50 3-8-54 Gate Opg. 2/8/55 6/10/55

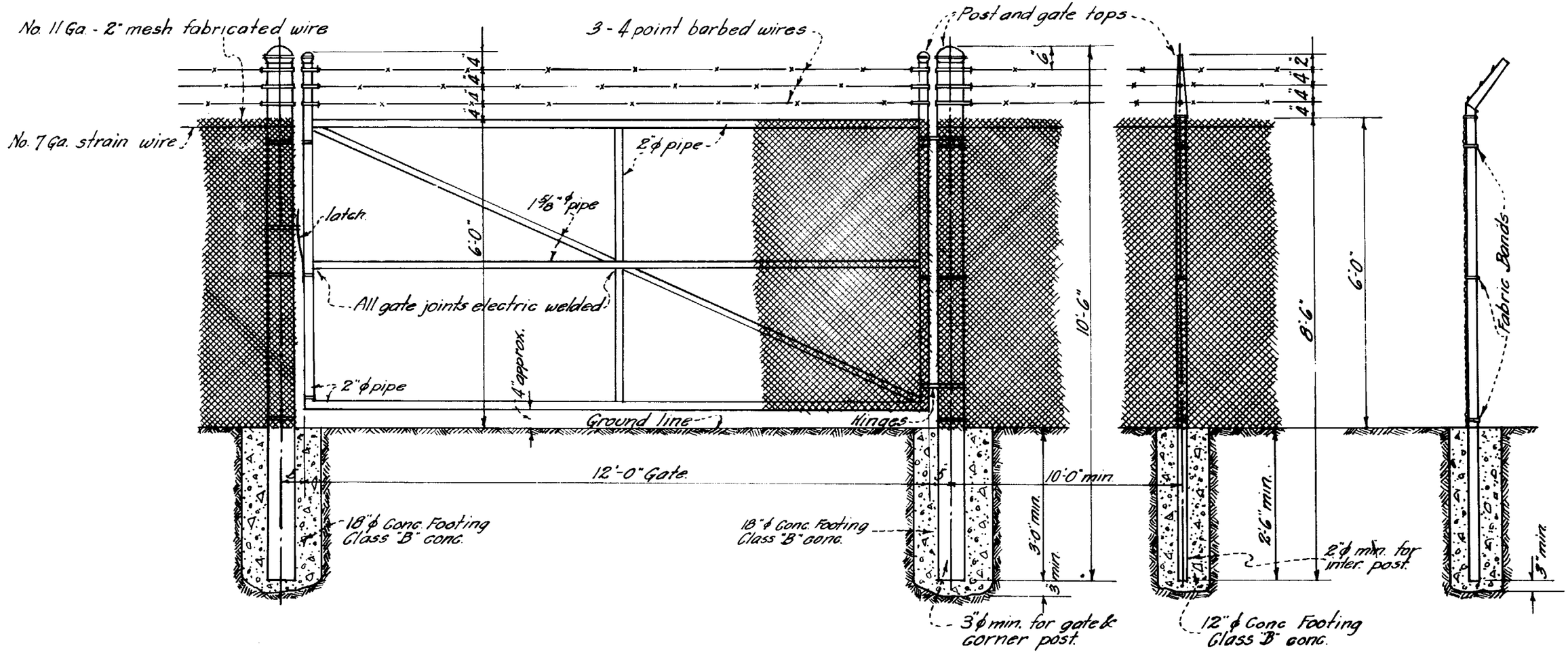

FABRICATED WIRE FENCE & GATE.
Any standard make of fence may be used which is similar to detail shown above. Entire assembly to be hot galvanized.

ARIZONA HIGHWAY DEPARTMENT PLANS DIVISION			REV.
INDUSTRIAL TYPE FABRICATED WIRE FENCE			Gate Post 4-29-52 G.H.
DRAWN BY	W.M.D. Jan. 1936	DRAWING NO.	
TRACED BY	K.S. July 1938	C-17	
CHECKED BY	H.H.W July 1938		
APPROVED BY Engr. of Plans	H H Wessel		

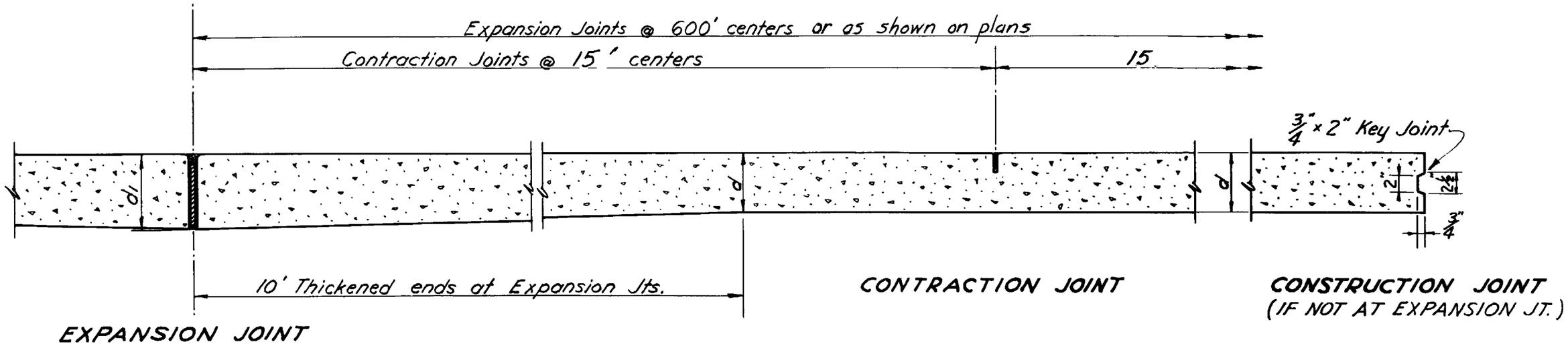

LONGITUDINAL SECTION THRU PAVEMENT

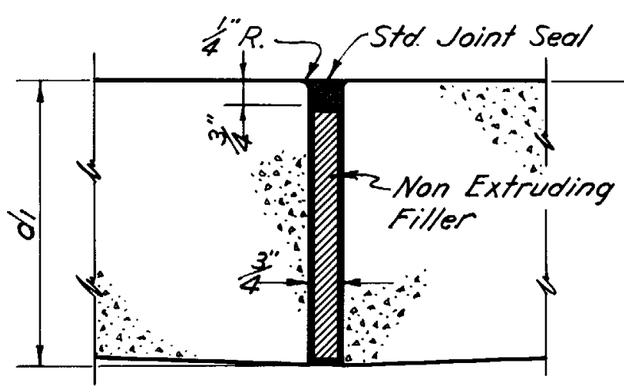

TRANSVERSE EXPANSION JOINT

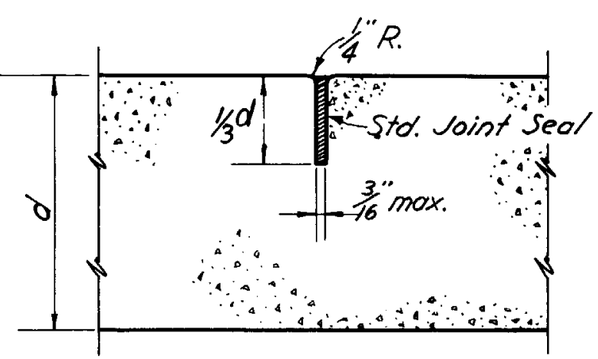

TRANSVERSE CONTRACTION JOINT

All general requirements may be superseded by special notations on the plans.

At intersections of side roads or streets, joints shall be so placed as to give the intersection a symmetrical appearance and to conform to the cross section of the intersecting road or street.

ARIZONA HIGHWAY DEPARTMENT PLANS DIVISION			REV. 3/17/50
TRANSVERSE JOINTS FOR PORTLAND CEMENT CONCRETE PAVEMENT			
DRAWN	GH Jan. 1946	DRAWING NO.	
TRACED	GH Jan. 1946	C-18	
CHECKED	HHW		
APPROVED ENGR. PLANS	H.H. Wessel		

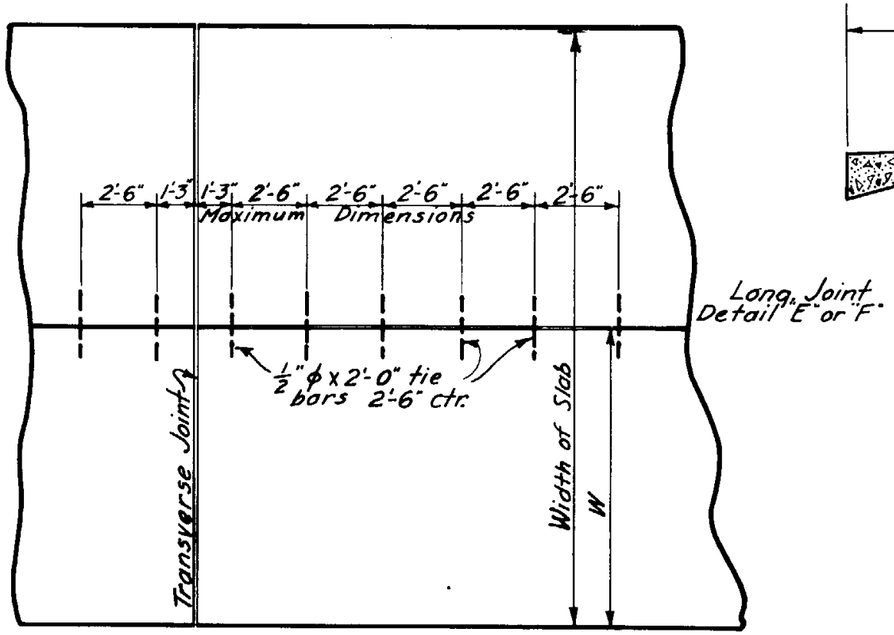

PLAN OF LONGITUDINAL JOINT
DETAIL "E" OR "F"

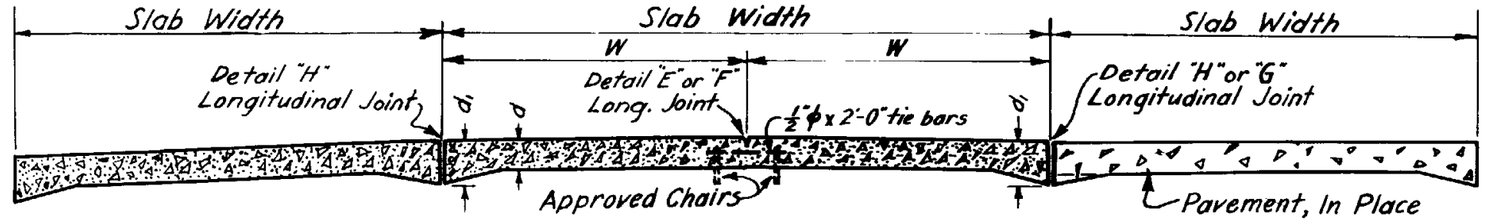

CROSS-SECTION

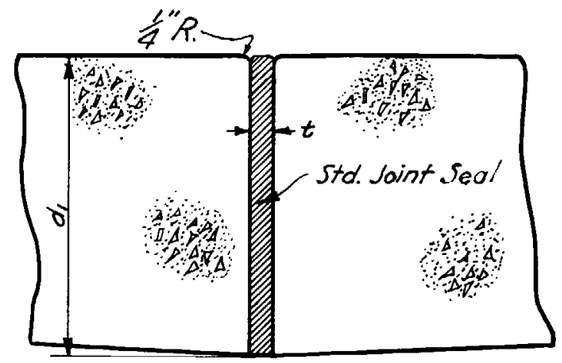

LONGITUDINAL JOINT
DETAIL "G"

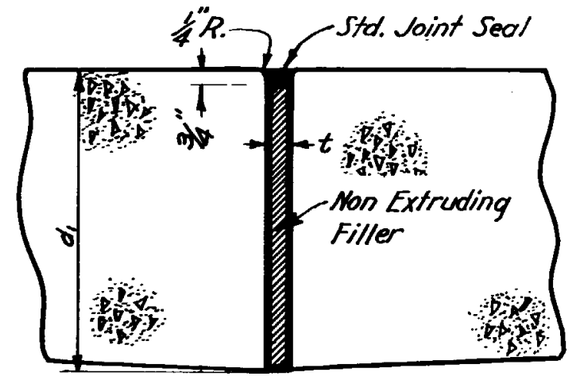

LONGITUDINAL JOINT
DETAIL "H"

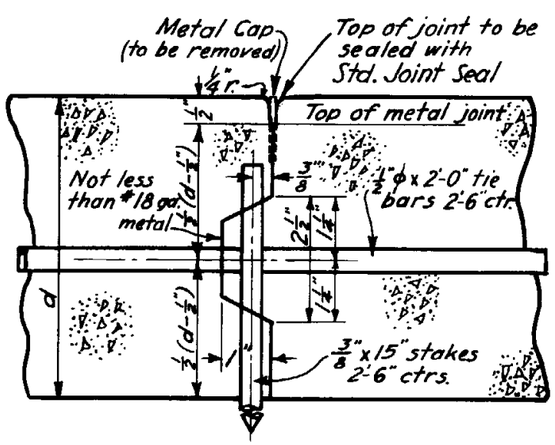

LONGITUDINAL JOINT
DETAIL "E"

If approved by the District Engineer, other deformations may be used.

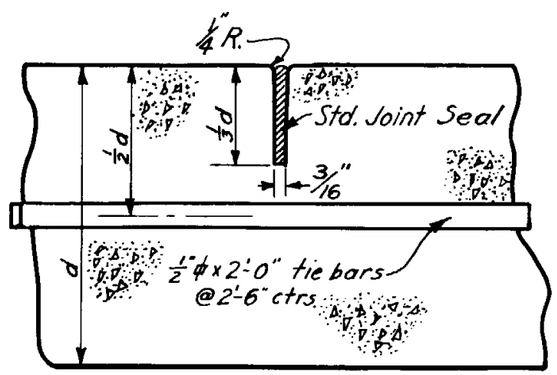

LONGITUDINAL JOINT
DETAIL "F"

GENERAL NOTES

Width (t) of longitudinal expansion joints shall be ½" unless otherwise noted on the plans.

All tie bars in center joints shall be deformed bars and shall have unbroken bond. They shall be held securely in place, parallel to the subgrade & perpendicular to the center line of the road, by the use of metal chairs of approved design and made for that purpose.

The edging tool used for all longitudinal joints shall be so constructed as to provide a smooth troweled surface 3" wide on each side of the joint.

All general requirements may be superseded by special notations on the plans.

ARIZONA HIGHWAY DEPARTMENT
PLANS DIVISION

LONGITUDINAL
JOINTS FOR PORTLAND CEMENT
CONCRETE PAVEMENT

DRAWN	O.K.	MAR., 1935	DRAWING NO.
TRACED	H.A.K.	JUNE, 1938	C-19
CHECKED	H.H.W.	JULY 1938	
APPROVED ENGR. PLANS	H.H. Wessel		

REV. Det. E 6-29-39 H.W. Details 8-1-41 W 8-1-41 1-17-46

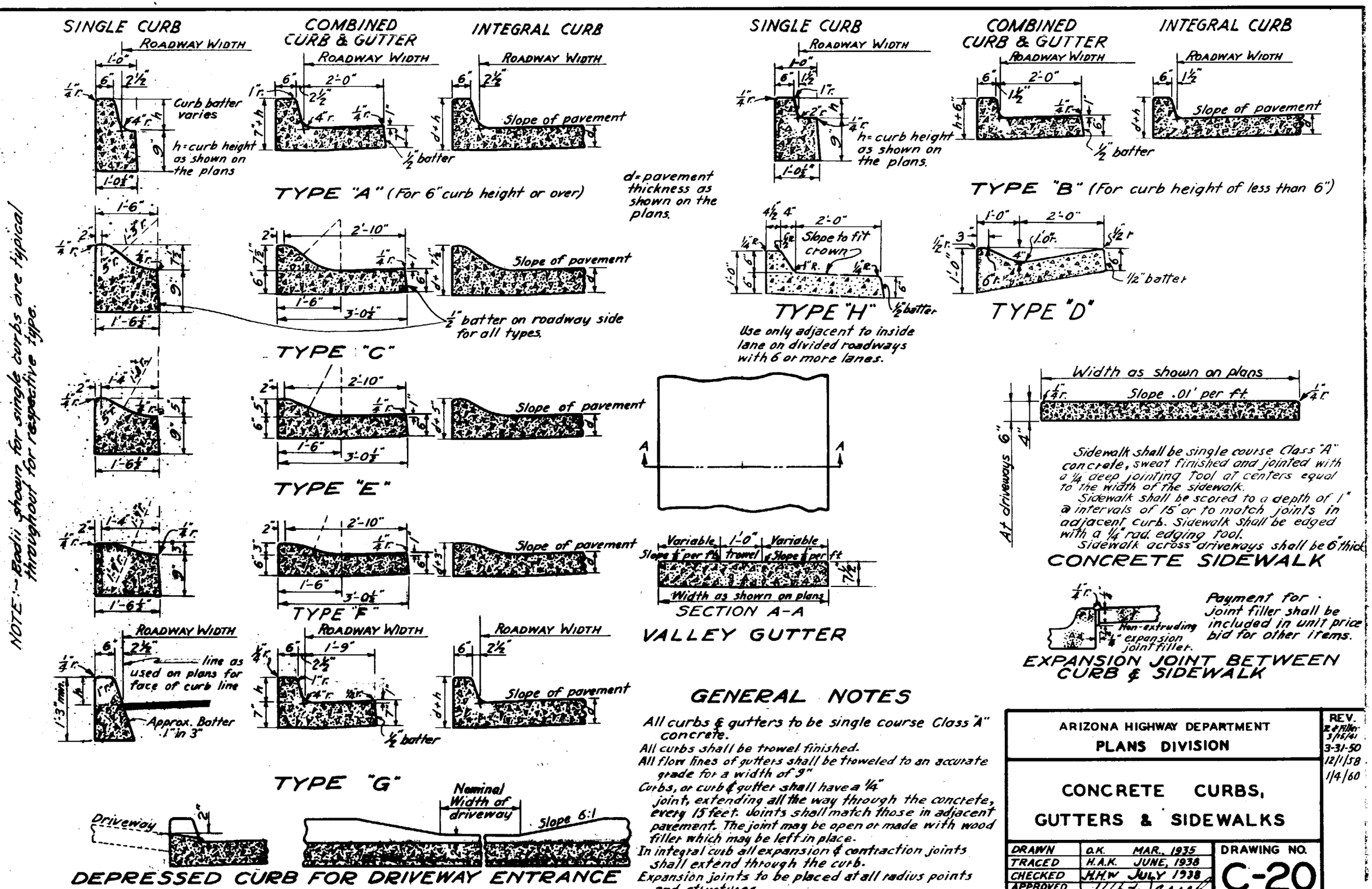

GENERAL NOTES

All curbs & gutters to be single course Class "A" concrete.

All curbs shall be trowel finished.

All flow lines of gutters shall be troweled to an accurate grade for a width of 9"

Curbs, or curb & gutter shall have a 1/4" joint, extending all the way through the concrete, every 15 feet. Joints shall match those in adjacent pavement. The joint may be open or made with wood filler which may be left in place.

In integral curb all expansion & contraction joints shall extend through the curb.

Expansion joints to be placed at all radius points and structures.

ARIZONA HIGHWAY DEPARTMENT PLANS DIVISION			REV. Z & Filler 3/15/41 3-31-50 12/1/58 1/4/60
CONCRETE CURBS, GUTTERS & SIDEWALKS			
DRAWN	O.K. MAR., 1935	DRAWING NO.	
TRACED	H.A.K. JUNE, 1938	C-20	
CHECKED	J.H.W JULY 1938		
APPROVED ENGR. PLANS	H H Wessel		

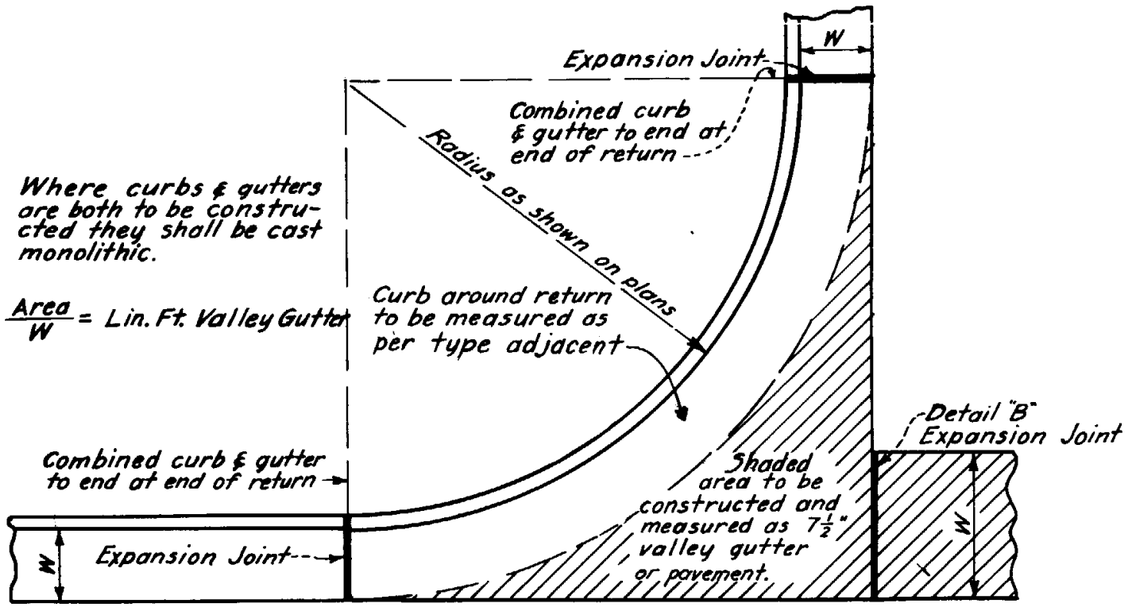

TYPICAL CONSTRUCTION OF VALLEY GUTTER AT STREET INTERSECTION OR ALLEY

W = width as shown on plans.

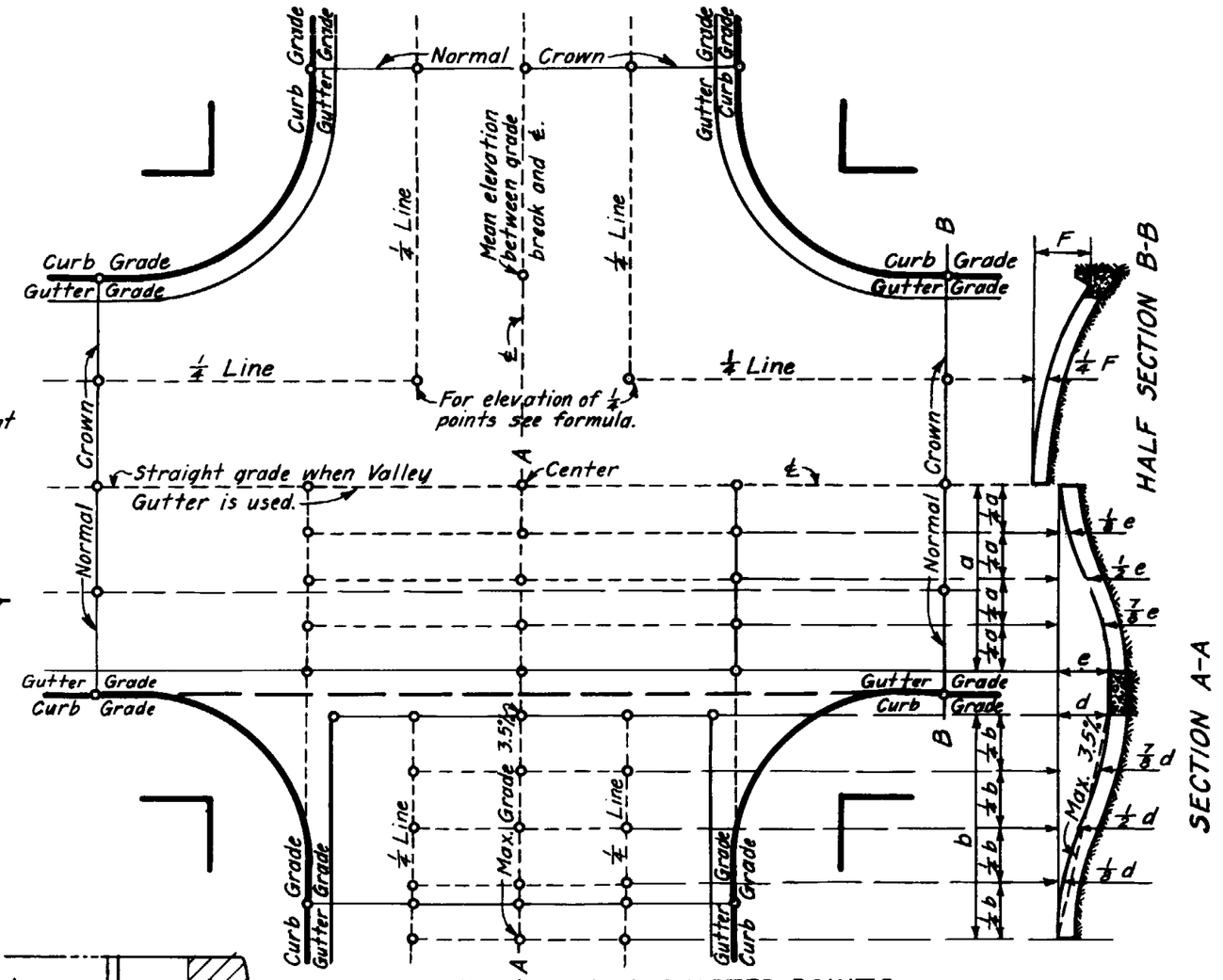

FORMULA FOR QUARTER POINTS

S = Sum of intersecting pavement widths.
D = Drop from center of intersection to center of return.
Where S = 0 to 90, P = 0.17
" S = 91 " 100, P = 0.18
" S = 101 " 110, P = 0.19
" S = 111 " 136, P = 0.20
PD = drop from center of intersection to the quarter point.

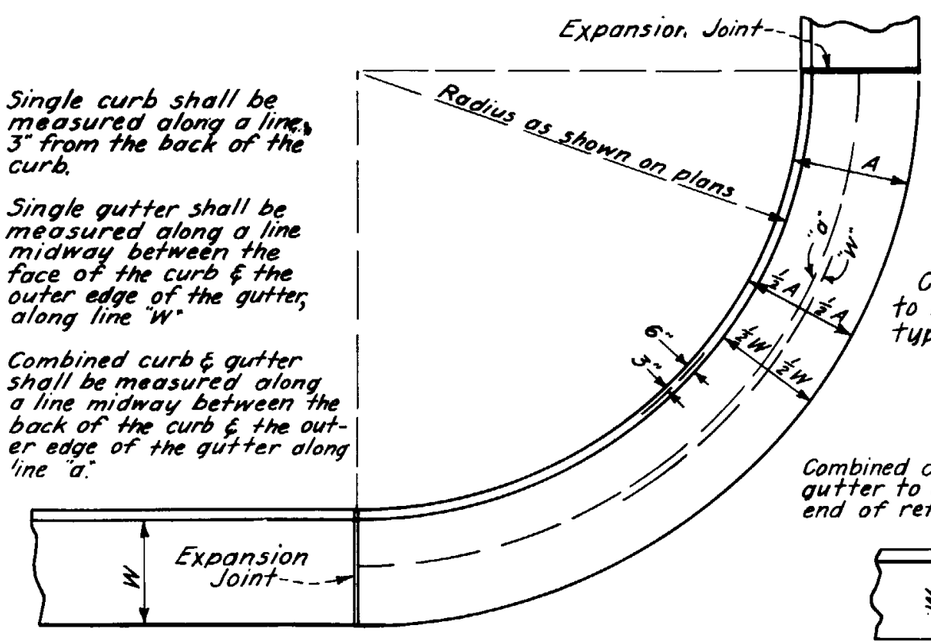

Single curb shall be measured along a line 3" from the back of the curb.

Single gutter shall be measured along a line midway between the face of the curb & the outer edge of the gutter, along line "W"

Combined curb & gutter shall be measured along a line midway between the back of the curb & the outer edge of the gutter along line "a."

MEASUREMENT OF CURB, GUTTER OR COMBINED CURB & GUTTER ON CURVES

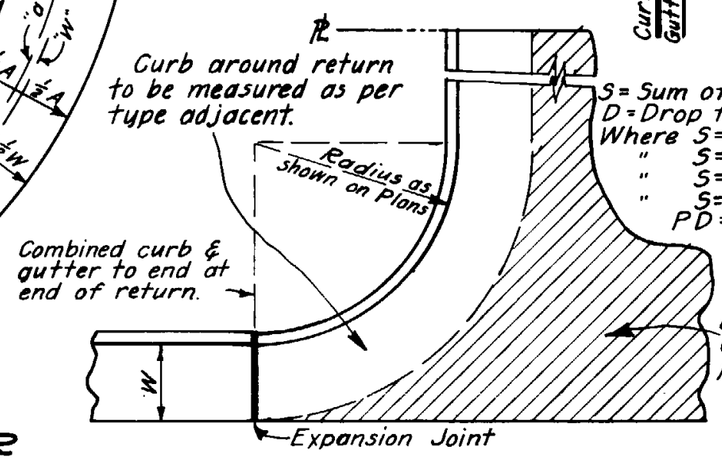

TYPICAL CONSTRUCTION OF CEMENT CONCRETE ALLEYS OR DRIVEWAYS

ARIZONA HIGHWAY DEPARTMENT
PLANS DIVISION

CURB & GUTTER MEASUREMENT AND STREET INTERSECTION GRADES

DRAWN	O.K. & W.M.D. 1935-36	DRAWING NO.
TRACED	H.A.K. JUNE, 1938	C-21
CHECKED	H.H.W. JULY 1938	
APPROVED ENGR. PLANS	H H Wessel	

REV.

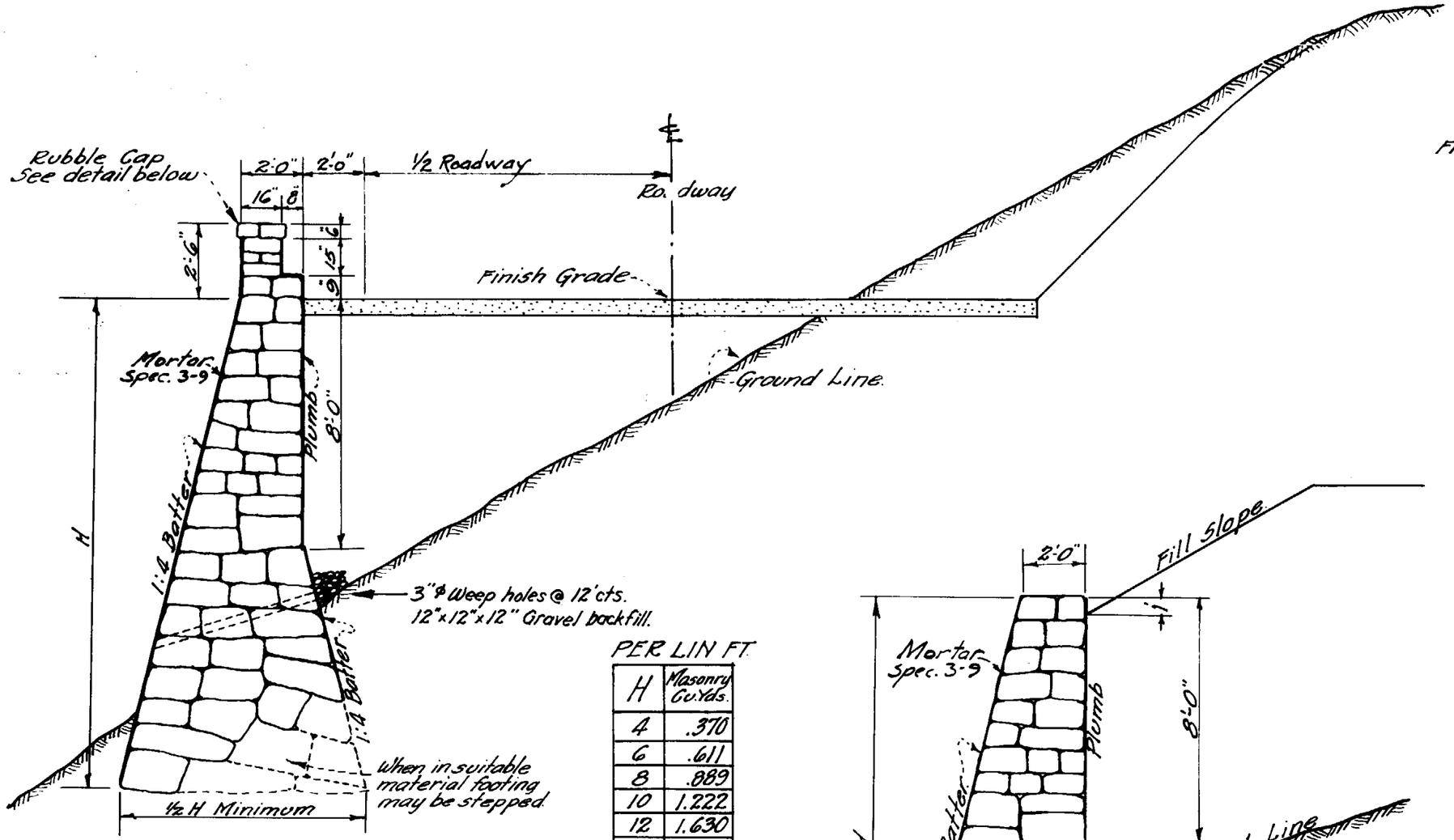

SECTION

TYPE A.

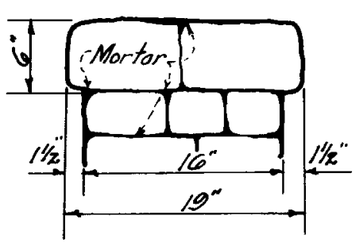

RUBBLE CAP DETAIL.

PER LIN FT.

H	Masonry Cu.Yds.
4	.370
6	.611
8	.889
10	1.222
12	1.630
14	2.111
16	2.667
18	3.296
20	4.000
22	4.778
24	5.630
26	6.556
28	7.556
30	8.630

Note:-
For parapet on top of retaining wall add per linear ft. .145 Cu. Yds. of masonry.

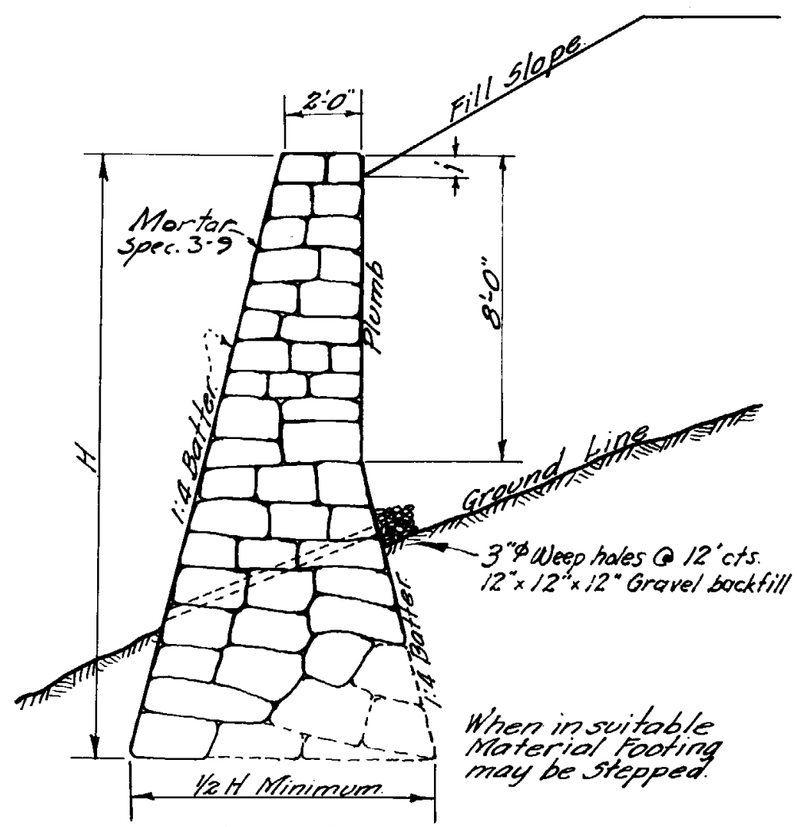

SECTION

TYPE B.

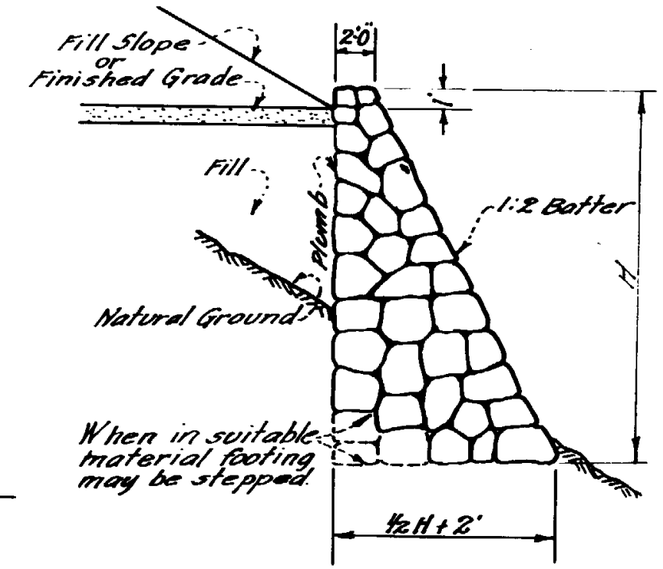

SECTION

DRY RUBBLE RETAINING WALL

To find quantities of rock required.

$$\frac{\frac{H^2}{4} + 2H}{27} = \text{Cu. Yds. per lineal ft. of wall}$$

Example:-
To find Cu. Yds. of rock per ft. of 10' high wall.

$$\frac{10 \times 10}{4} + 2 \times 10 = 45 \text{ C.F.}, \quad \frac{45}{27} = 1.66 \text{ C.Y. per lin. ft.}$$

Note:-
Due to disintegrating character of some types of rock, height of wall should be limited to 10 ft. unless otherwise approved by Laboratory.

Material to be used in construction of wall to be approved by laboratory.

ARIZONA HIGHWAY DEPARTMENT
PLANS DIVISION

REV.

CEMENT RUBBLE AND DRY RUBBLE RETAINING WALLS

DRAWN BY	W.M.D.	JAN. 1936
TRACED BY	K.S.	JUNE, 1938
CHECKED BY	H.H.W	JULY 1938
APPROVED ENGR. OF PLANS	H.H. Wessel	

DRAWING NO. C-22

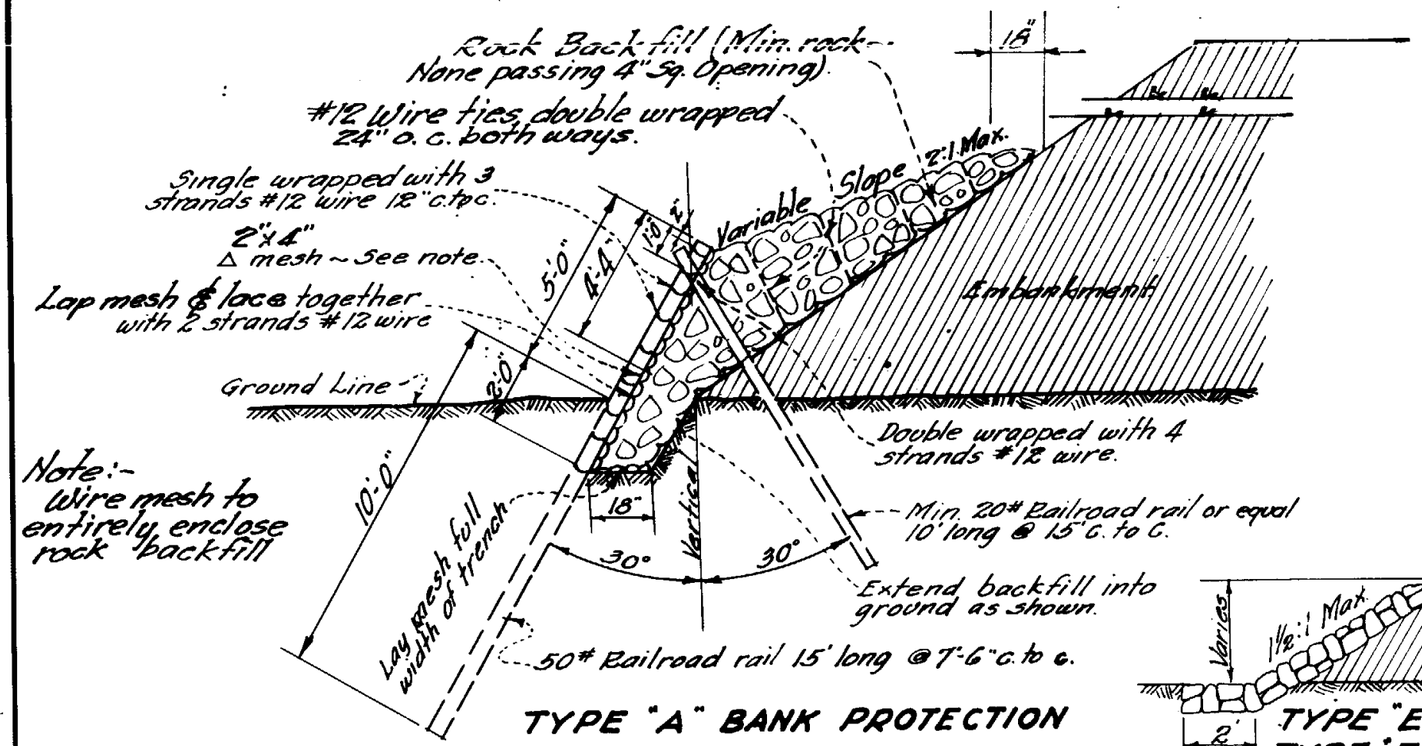

TYPE "A" BANK PROTECTION

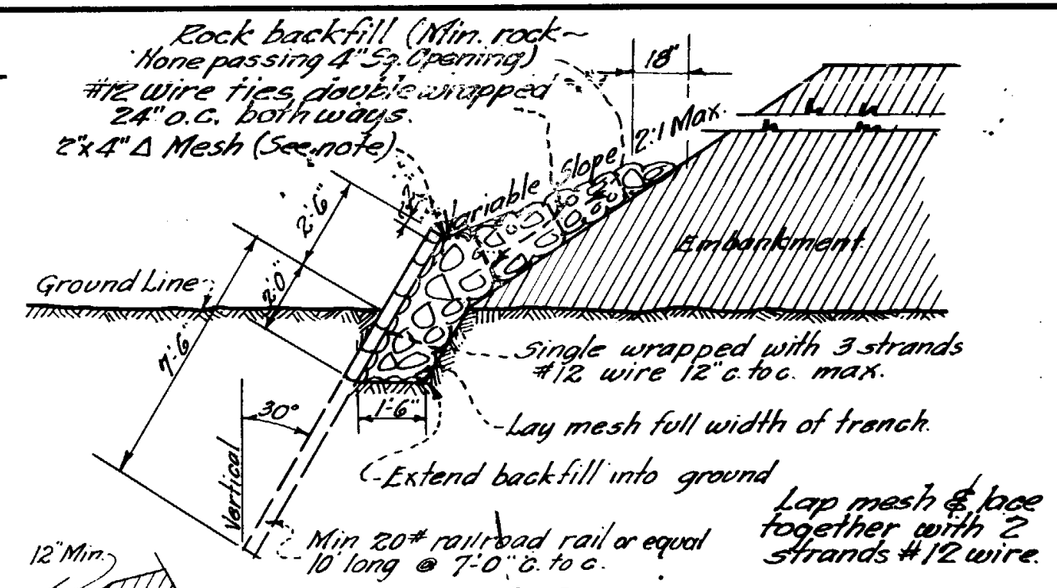

TYPE "B" BANK PROTECTION

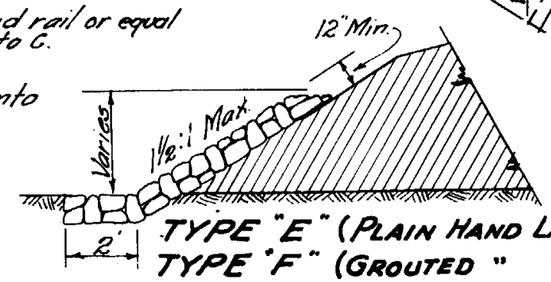

TYPE "E" (PLAIN HAND LAID RIP RAP)
TYPE "F" (GROUTED " " " ")

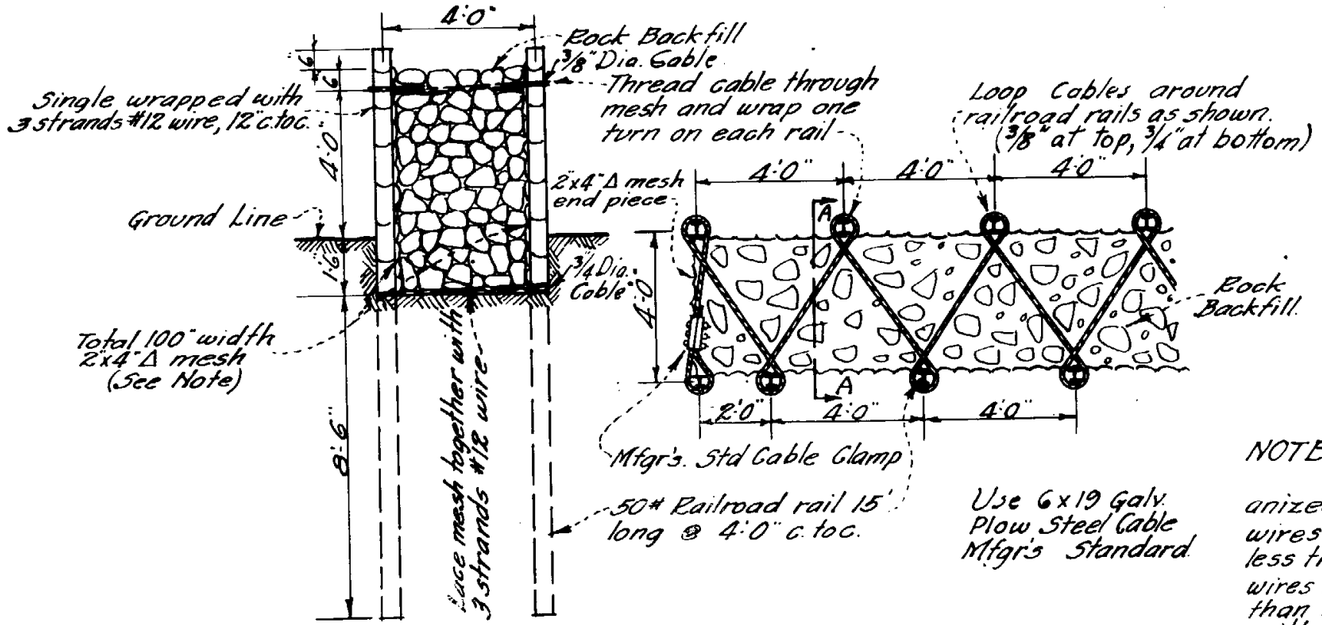

TYPE "C" BANK PROTECTION

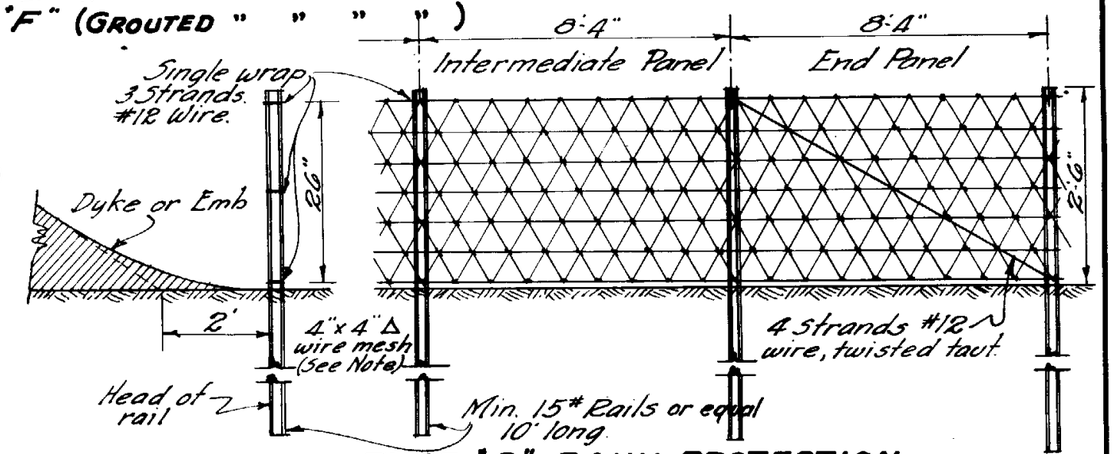

TYPE "D" BANK PROTECTION

NOTE:

Wire mesh to be either galvanized or galvanealed. Horizontal wires to be 2 strands, twisted, not less than 12½ gauge. Vertical cross wires not less than 14 gauge. Where more than one width is used, lace together with 2 strands #12 wire and tie at every rail. All wire to be galvanized as per Item 57 Page 213 in Std. Specs.

4/4 - 10/10 Galvanized welded wire fabric may be substituted for Δ mesh if approved by the engineer.

ARIZONA HIGHWAY DEPARTMENT
PLANS DIVISION

BANK PROTECTION, RIP RAP

DRAWN	H.A.K.	JUNE, 1935
TRACED	K.S.	JUNE, 1938
CHECKED	H.H.W.	July 1938
APPROVED ENGR. PLANS	H H Wessel	

DRAWING NO. C-23

REV. Type "D" 11/8/41. 12-20-45 6-28-47 3-20-50 9-19-55

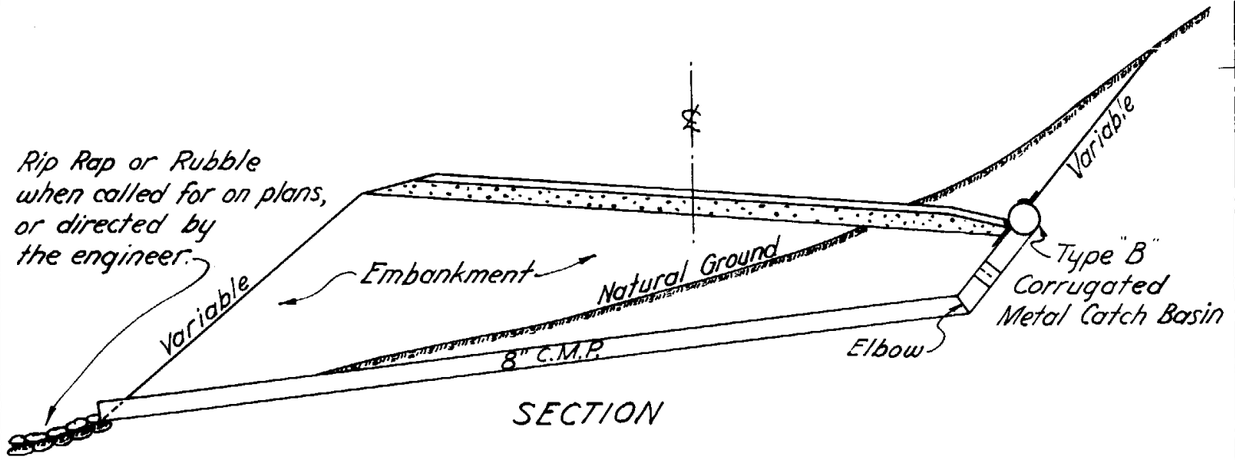

SECTION

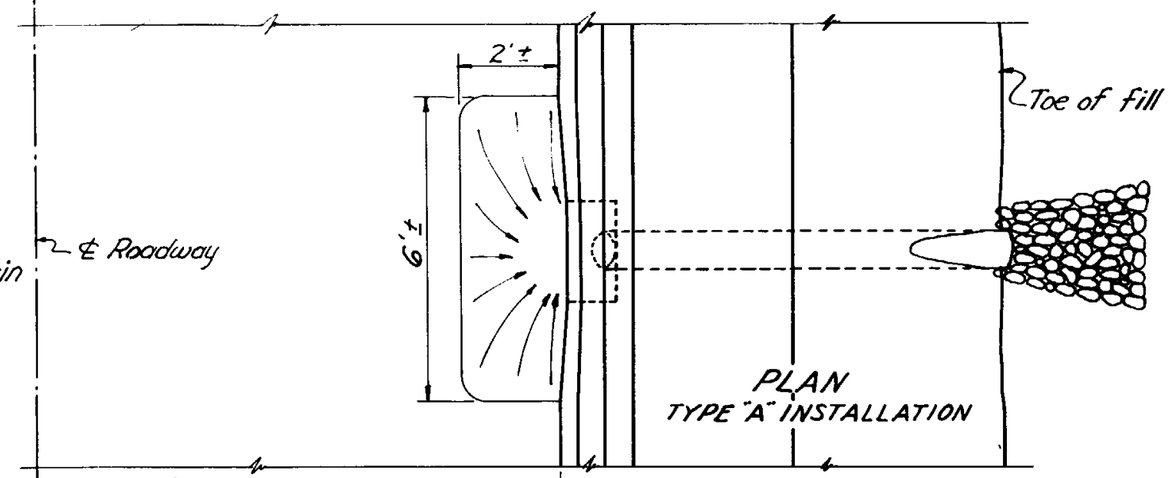

PLAN
TYPE "A" INSTALLATION

Note—

Include elbow as part of total length. Call for hinged band coupling for pipe joints. Use 12" band width for pipes over 12' long, 7" band width for pipes 12' long or less. Catch basin to have bituminous coating. C.M.P. shall be plain unless otherwise specified. Catch basin shall be shifted to fit the ground so as to lessen the angle in the C.M.P. as much as possible.

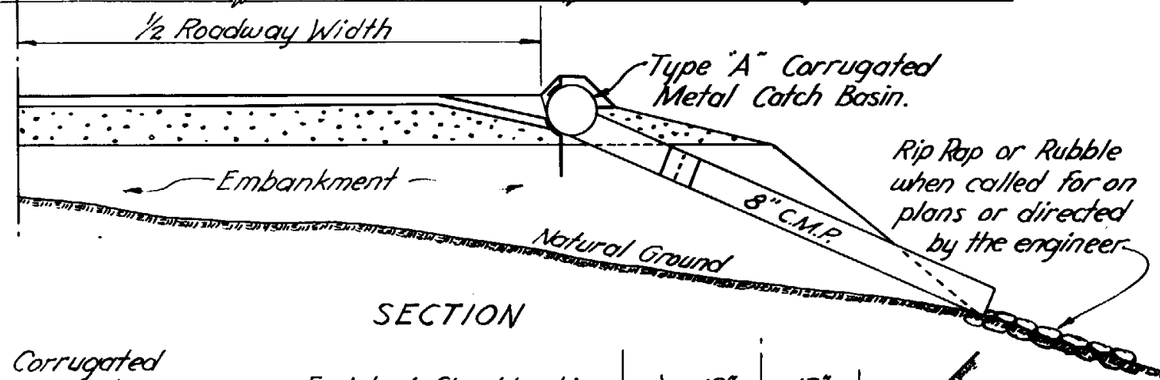

SECTION

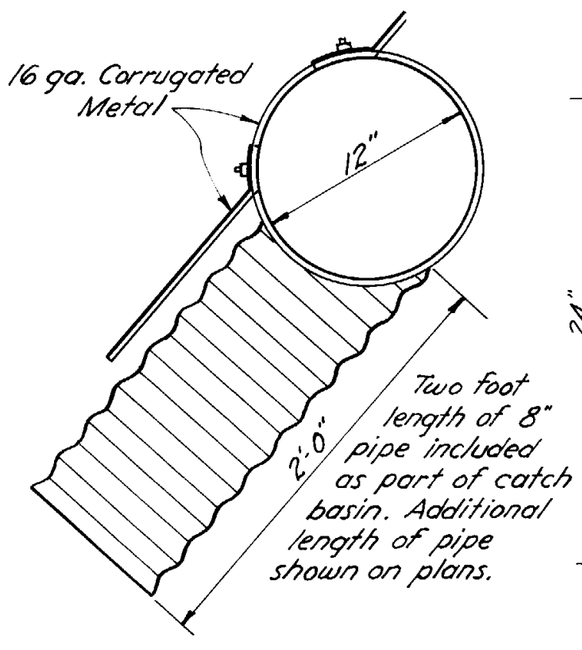

SIDE ELEVATION
TYPE "B"

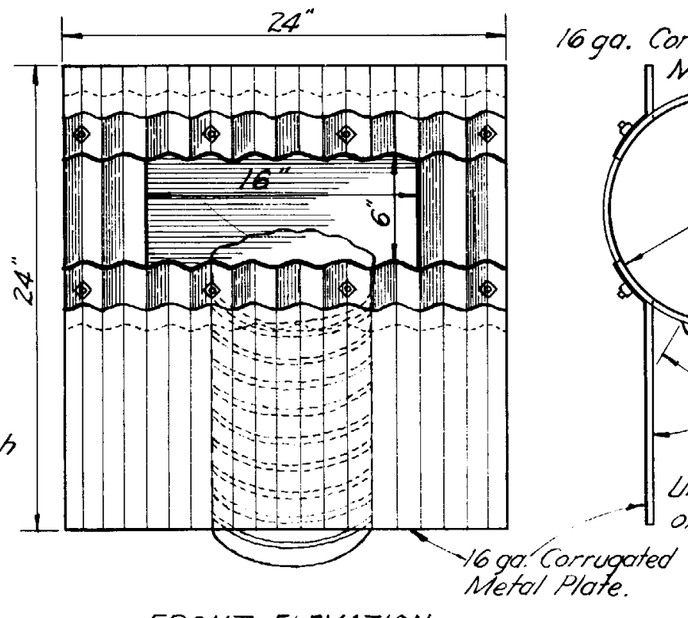

FRONT ELEVATION

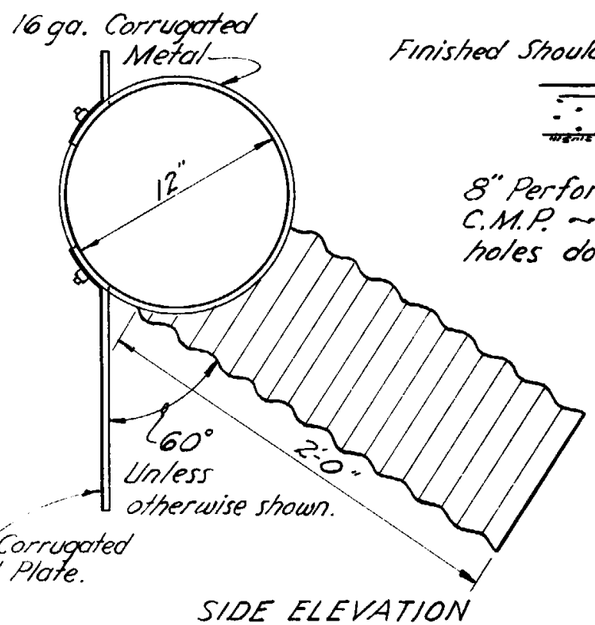

SIDE ELEVATION
TYPE "A"

CATCH BASINS

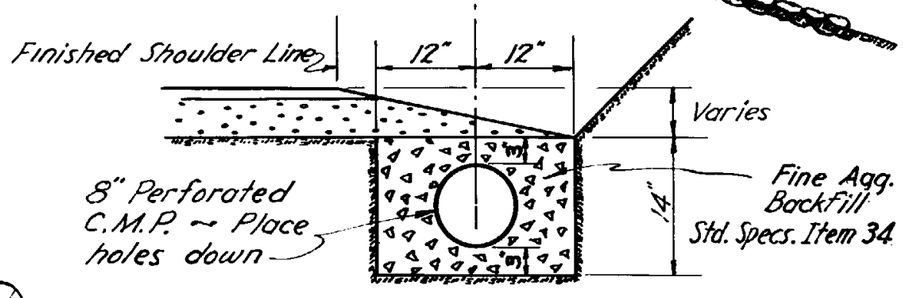

PERFORATED C.M.P. INSTALLATION

ARIZONA HIGHWAY DEPARTMENT PLANS DIVISION		REV. 3/17/50 8/15/52
CORRUGATED METAL CATCH BASINS AND PERFORATED C.M.P.		
DRAWN	C.B.B. July 1945	DRAWING NO.
TRACED	GH Nov. 1945	C-24
CHECKED	HHW	
APPROVED PLANS ENG'R.	H. H. Wansel	

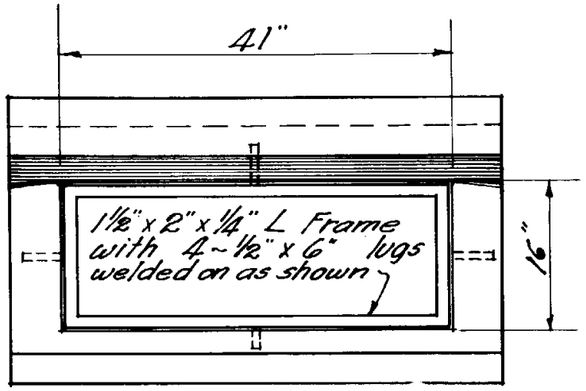

PLAN

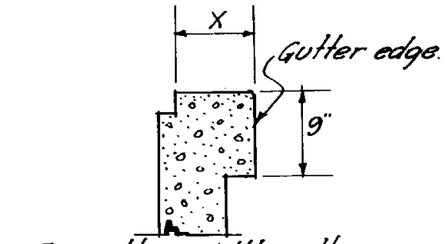

For gutter widths, other than Type G, outside edge of catch basin shall conform to edge of gutter. (Dimension X)

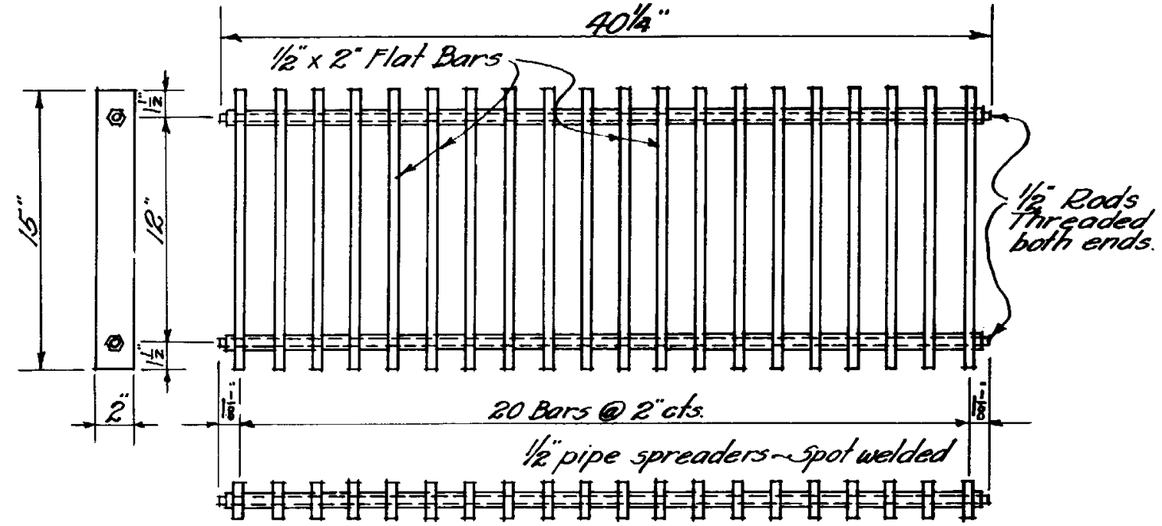

BAR GRATE
Scale ~ 1 1/16" = 1'-0"

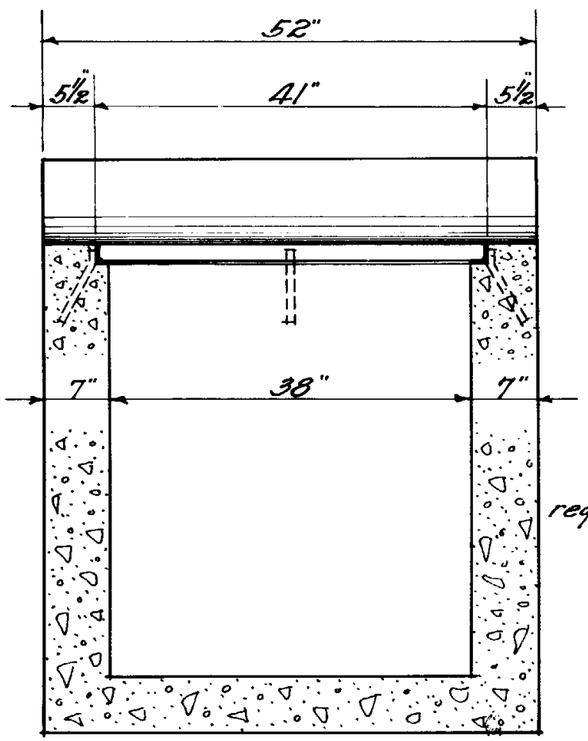

LONGITUDINAL SEC

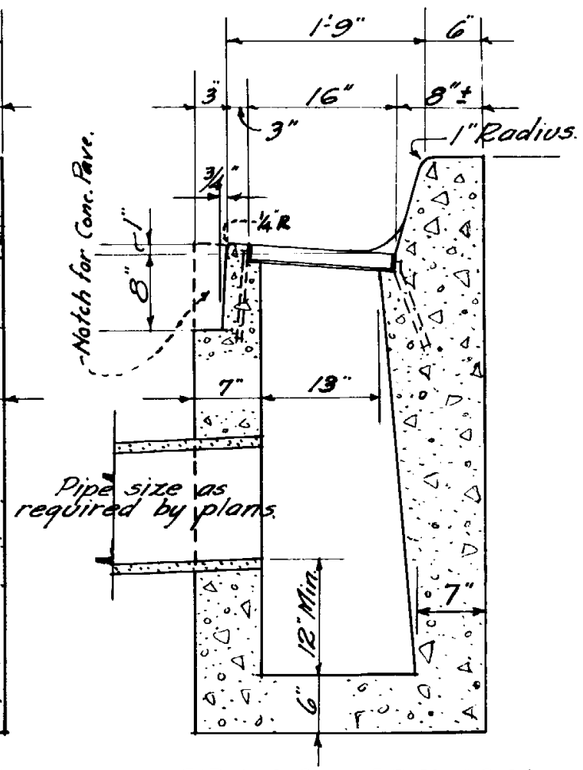

CROSS SECTION

DETAIL OF NO. 1 CATCH BASIN
Scale ~ ¾" = 1'-0"

GENERAL NOTES

Warp face of standard curb and gutter (or curb) into catch basin in lengths of 2 feet on each side.

The curb and gutter section of the catch basin shall conform in surface finish to the adjoining curb and gutter.

All concrete shall be class "A".

All exposed edges shall be finished with a suitable edger.

All structural iron, including bar grate, shall have a shop coat of No. 1 paint and a second coat of No. 9 paint.

When catch basins are located in curb returns, the catch basin curb face shall conform to the radius of the return.

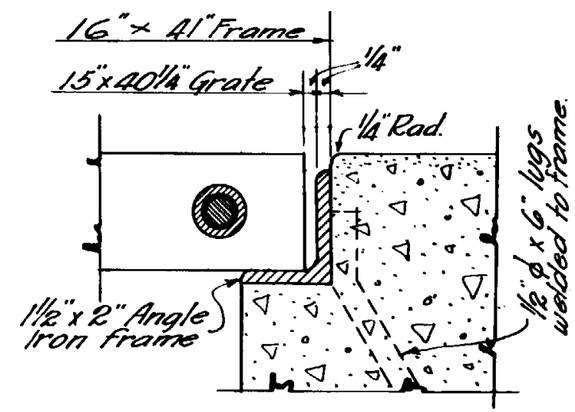

DETAIL OF ANGLE FRAME GRATE SUPPORT
Scale ~ ⅜" = 1"

ARIZONA HIGHWAY DEPARTMENT PLANS DIVISION			REV. 8-1-41 6-14-47
CATCH BASIN NO. 1			
DRAWN	H.H.W.	DRAWING NO.	
TRACED	K.S.	C-25	
CHECKED	H.H.W.		
APPROVED	H.H. Wessel		

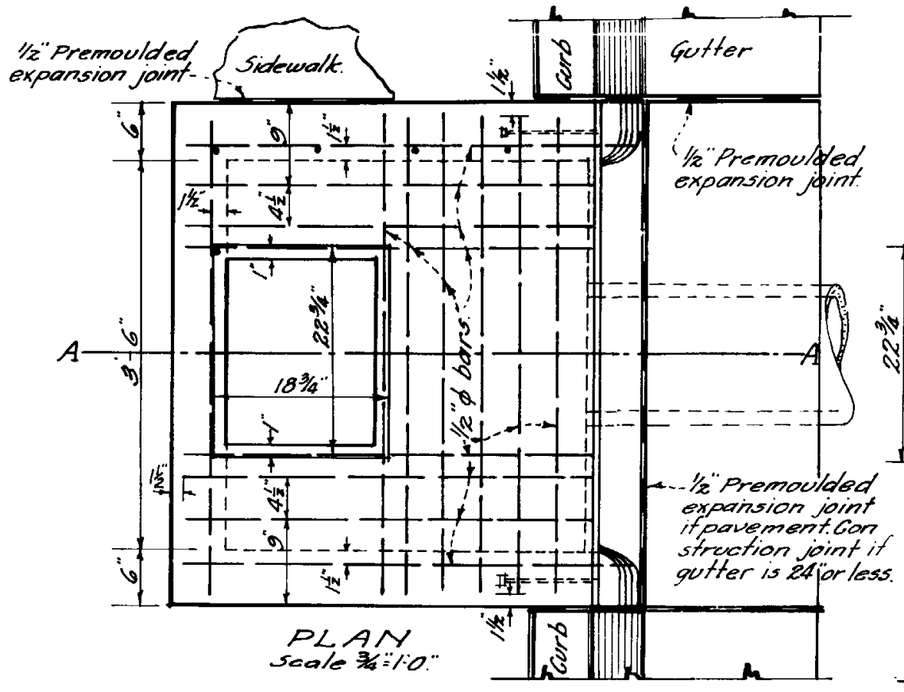

PLAN
Scale 3/4"=1'-0"

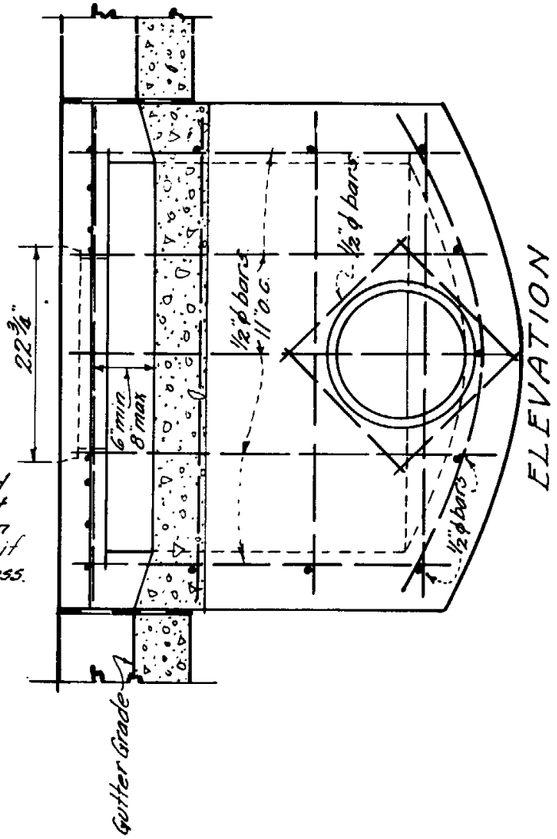

ELEVATION

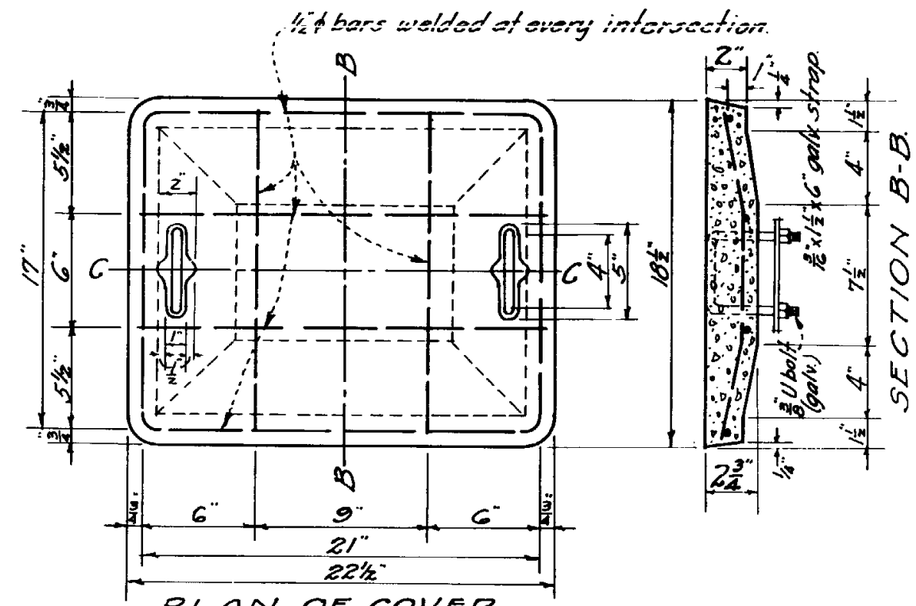

PLAN OF COVER
Scale 1 1/2"=1'-0"

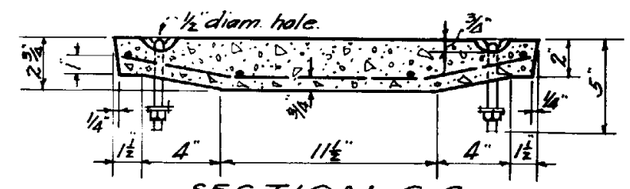

SECTION C-C

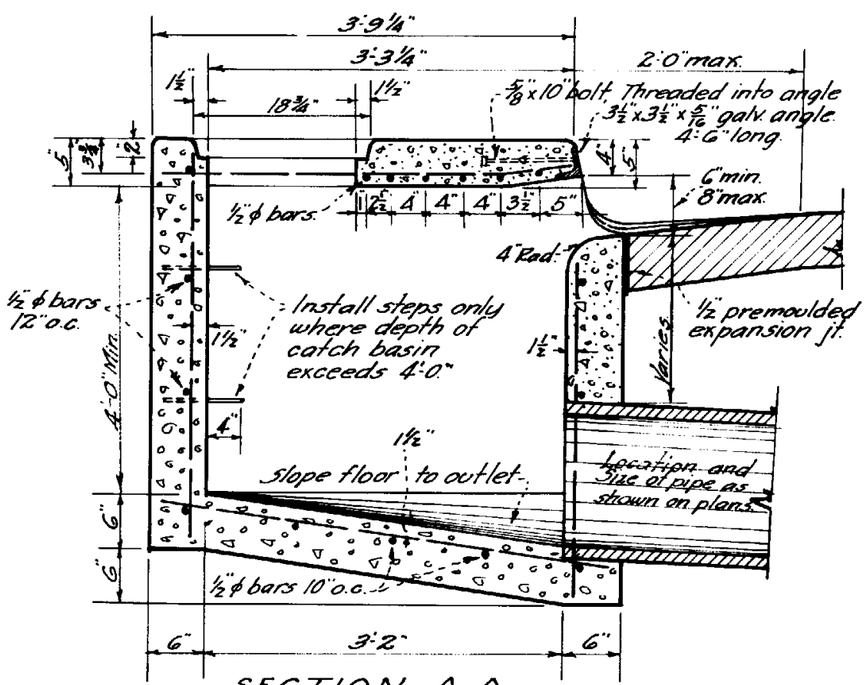

SECTION A-A.

The finish of the top slab shall conform in color, marking and finish to the adjacent cement work. Where no sidewalk exists the surface shall be trowel finished, without mortar coat.

The concrete cover shall be composed of one part Portland cement and three parts clean well graded aggregate passing a 5/8" screen. All other concrete shall be class "A".

When catch basins are located in a curb return the angle iron above the inlet shall conform to the curvature of the curb.

All exposed edges shall be finished with a suitable edger.

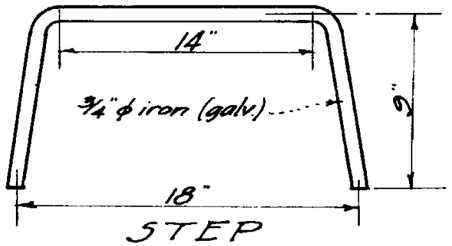

STEP

ARIZONA HIGHWAY DERARTMENT PLANS DIVISION			REV.
CATCH BASIN NO. 2			
Drawn	O.K.	Sept. '35	DRAWING NO.
Traced	K.S.	June '38	C-26
Checked	H.H.W.	JULY 1938	
Approved Eng. of Plans	H H Wessel		

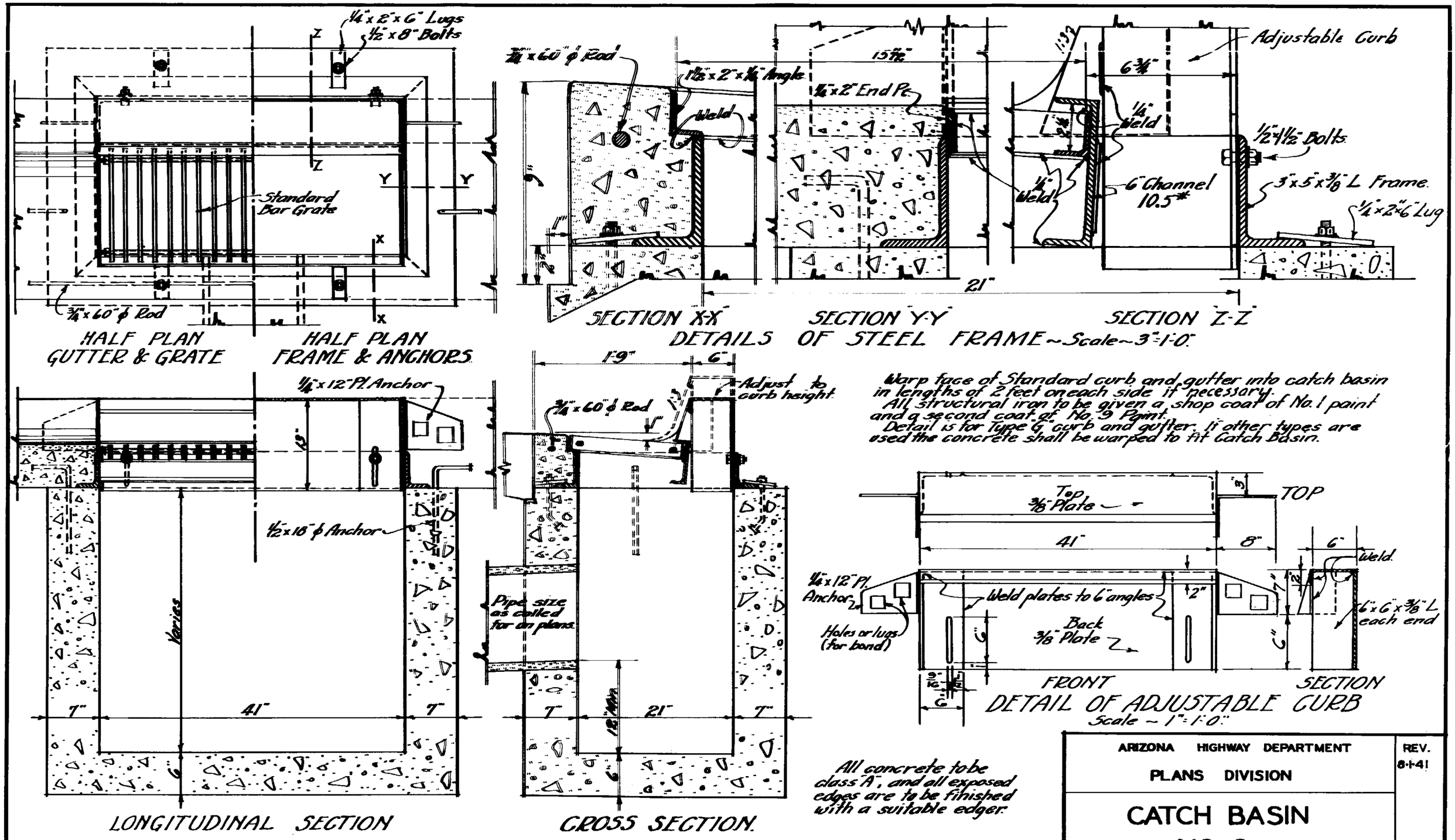

ARIZONA HIGHWAY DEPARTMENT

PLANS DIVISION

REV. 8-1-41

CATCH BASIN NO. 3

DRAWN	H.H.W.	DRAWING NO.
TRACED	K.S.	C-27
CHECKED	H.H.W.	
APPROVED	H. H. Wessel	

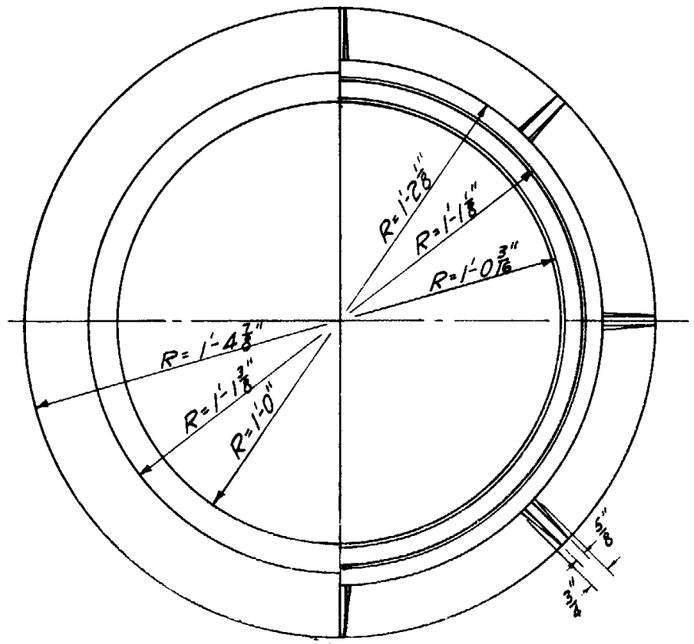

HALF PLAN
BOTTOM OF FRAME

HALF PLAN
TOP OF FRAME

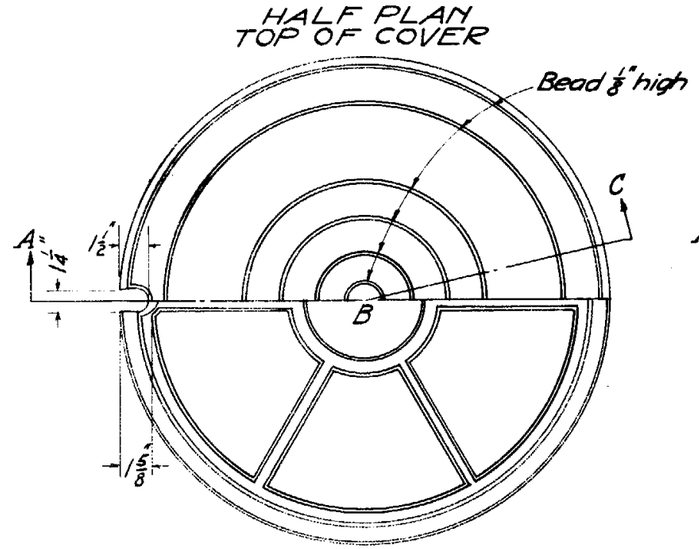

HALF PLAN
TOP OF COVER

HALF PLAN
BOTTOM OF COVER

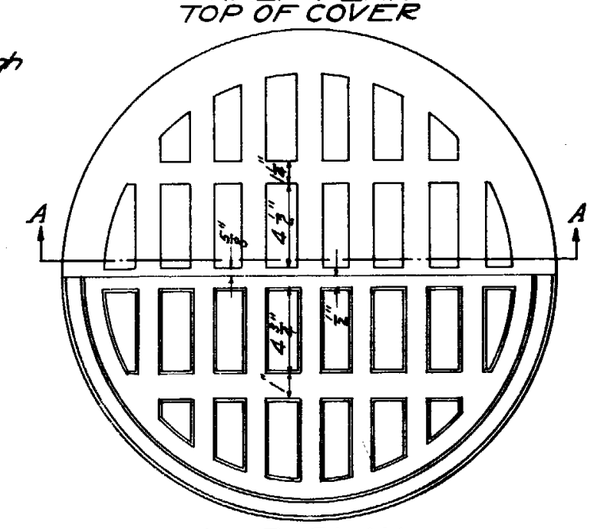

HALF PLAN
TOP OF COVER

HALF PLAN
BOTTOM OF COVER

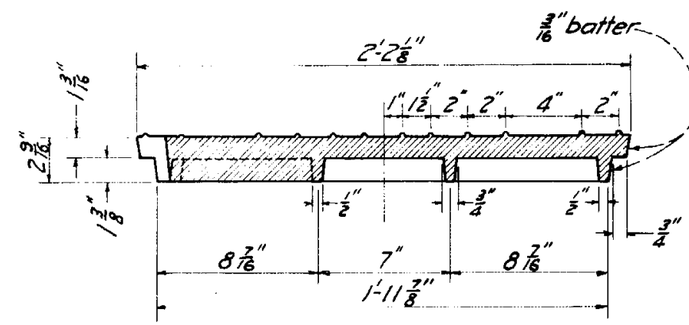

SECTION A-B-C OF COVER

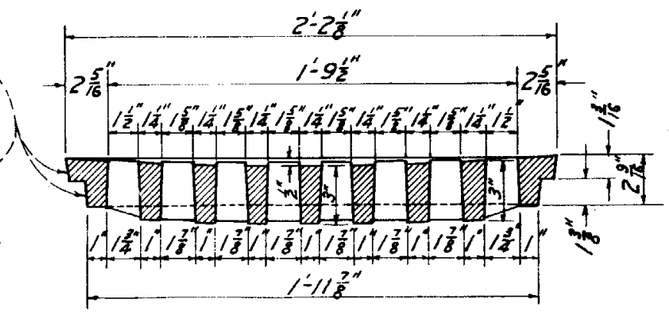

SECTION A-A OF COVER

TYPE "A" COVER
Approx. weight 190 lbs.

TYPE "B" COVER
Approx. weight 280 lbs.

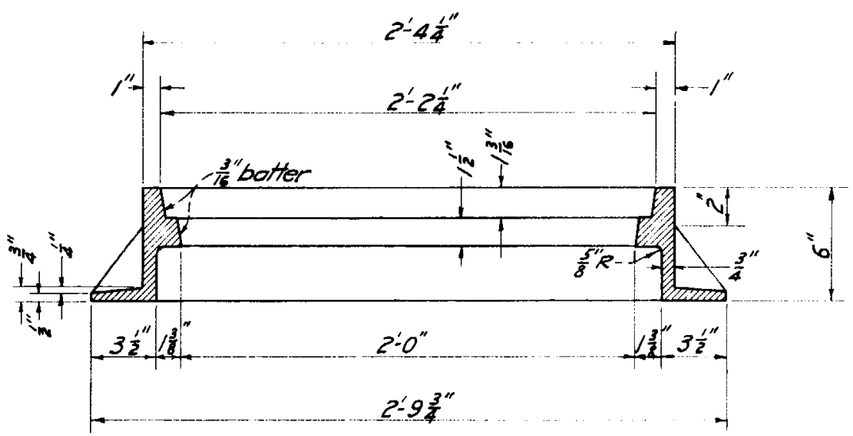

SECTION OF FRAME

Approx. weight 205 lbs.

Scale 1 1/2" = 1'-0"

TYPE "A-1" COVER: shall be the same as Type "A" except that the cover shall be vented with at least six one inch holes, equally spaced in a circle 8 1/2" from the center of the cover.

Type "A" cover shall be used unless otherwise specified.

Notations as shown on the plans shall be as follows: Std. M.H. Frame & Cover No. 1-B, the letter denoting the type of cover.

The bearing faces shall be machined so that the cover will have a uniform bearing in any position in the frame.

ARIZONA HIGHWAY DEPARTMENT
PLANS DIVISION

REV.

MANHOLE
FRAME & COVER NO. 1

DRAWN	O.K.	Oct. 1935.	DRAWING NO.
TRACED	O.K.	" "	C-28
CHECKED	L.M.	" "	
APPROVED ENG. OF PLANS	H.H. Wessel		

HALF PLAN
TOP OF COVER

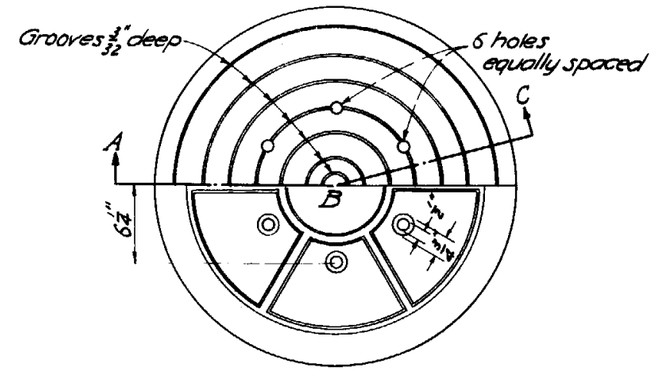

HALF PLAN
BOTTOM OF COVER

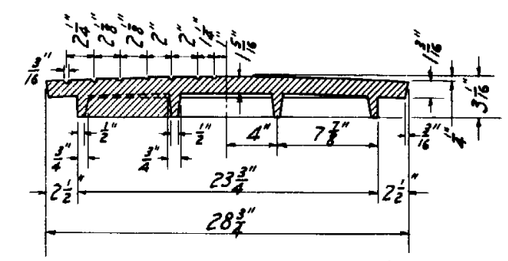

SECTION A-B-C OF COVER

Approx. weight 210 lbs.

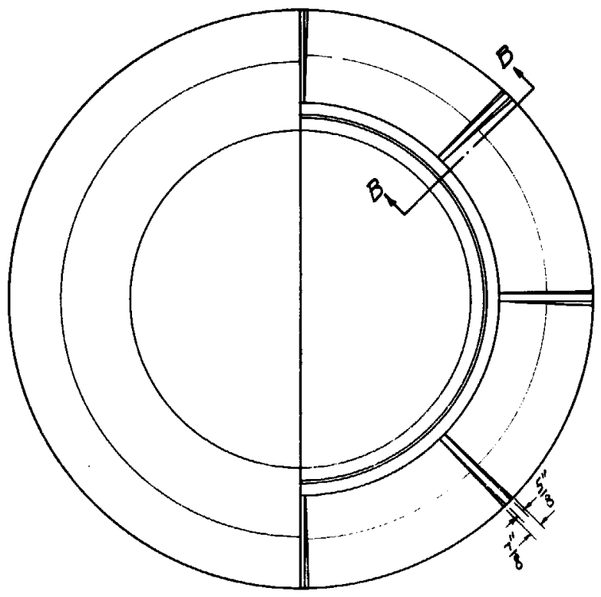

HALF PLAN
BOTTOM OF FRAME

HALF PLAN
TOP OF FRAME

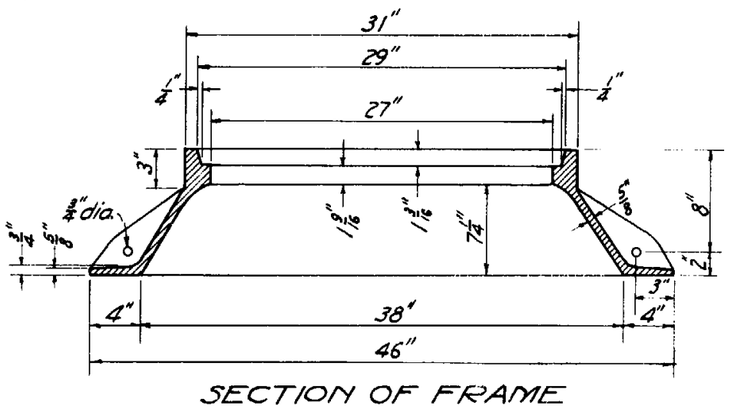

SECTION OF FRAME

Approx. weight 377 lbs.

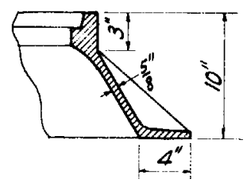

SECTION B-B

The bearing faces shall be machined so that the cover will have a uniform bearing in any position in the frame.

Scale 1"=1'-0"

ARIZONA HIGHWAY DEPARTMENT PLANS DIVISION			REV.
MANHOLE FRAME & COVER NO. 2			
DRAWN	QC.	Oct. 1935	DRAWING NO.
TRACED	QK.	" "	C-29
CHECKED	L.M.	" "	
APPROVED ENG. OF PLANS	H H Wessel		

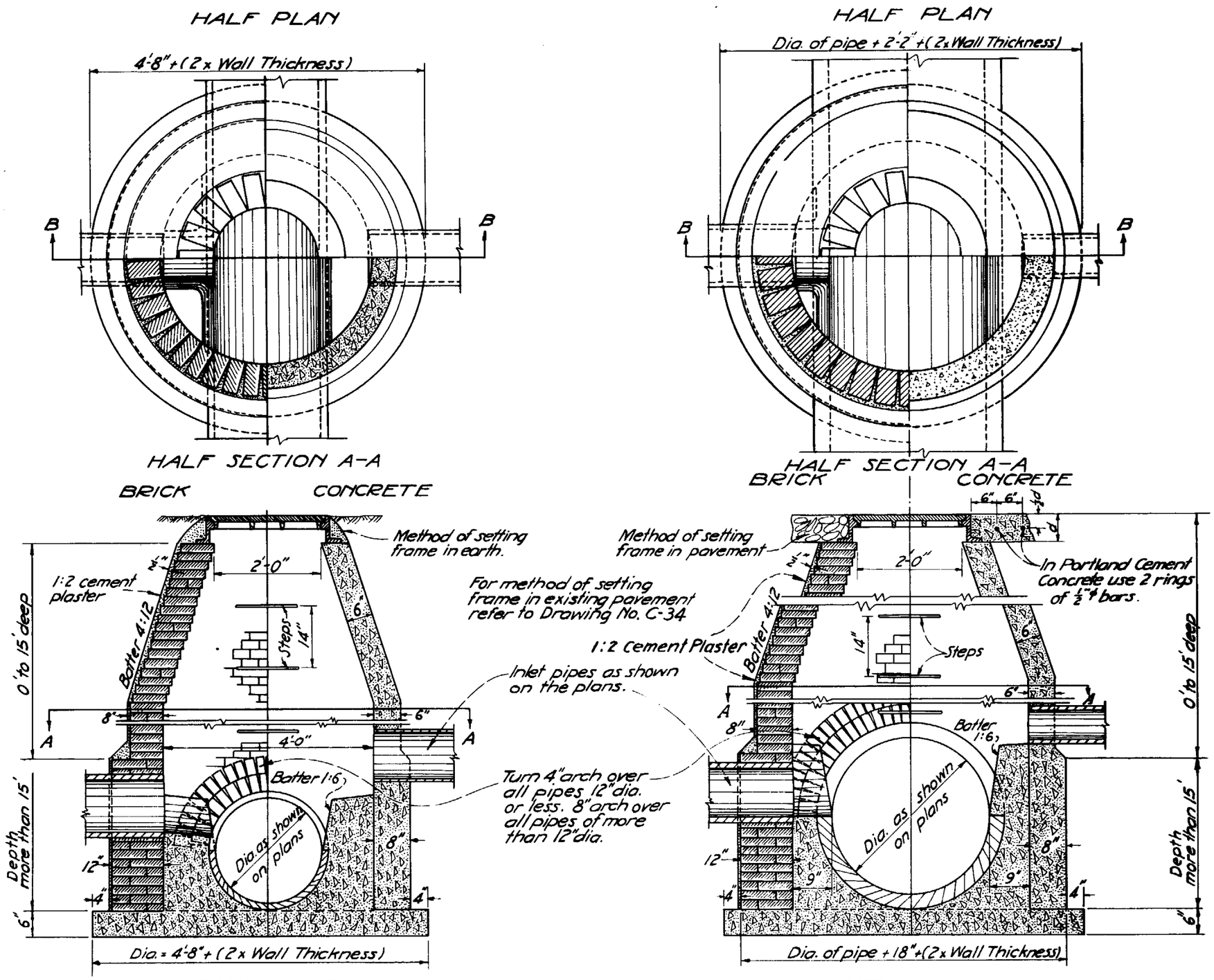

Manhole frame & cover No. 1 is shown. Other types may be substituted if noted on the plans.

All concrete shall be Class "A".

Every 5th. course of brick shall be laid as stretchers.

ARIZONA HIGHWAY DEPARTMENT
PLANS DIVISION

REV. July 17, 1936 No. 2

MANHOLE
NO. 1 & NO. 2

DRAWN	QK.	Oct. 1935	DRAWING NO.
TRACED	QK.	" "	C-30
CHECKED	L.M.	" "	
APPROVED ENG. OF PLANS	H H Wessel		

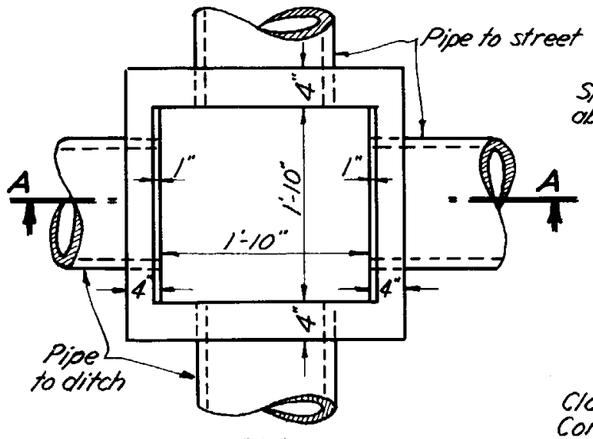

PLAN
STANDPIPE NO. 1

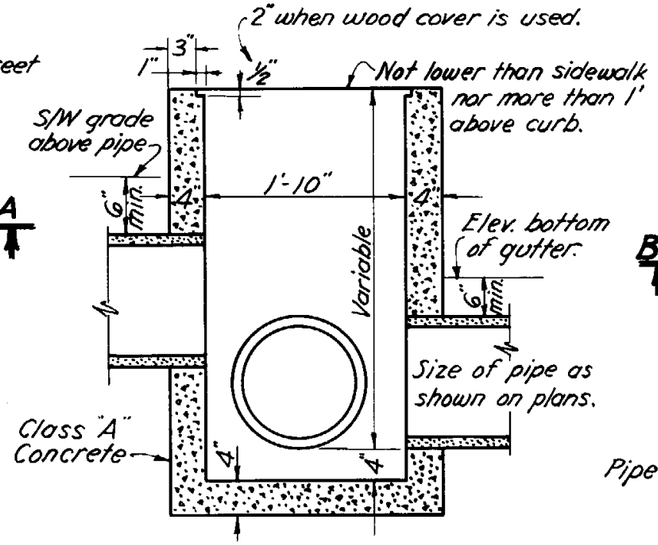

SECTION A-A

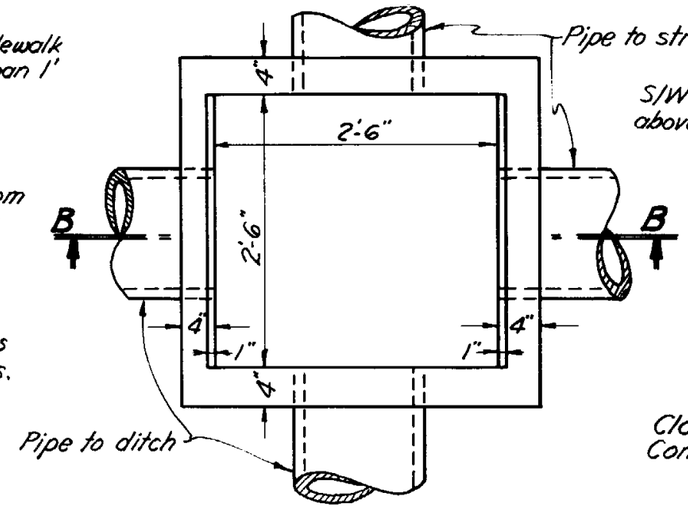

PLAN
STANDPIPE NO. 2

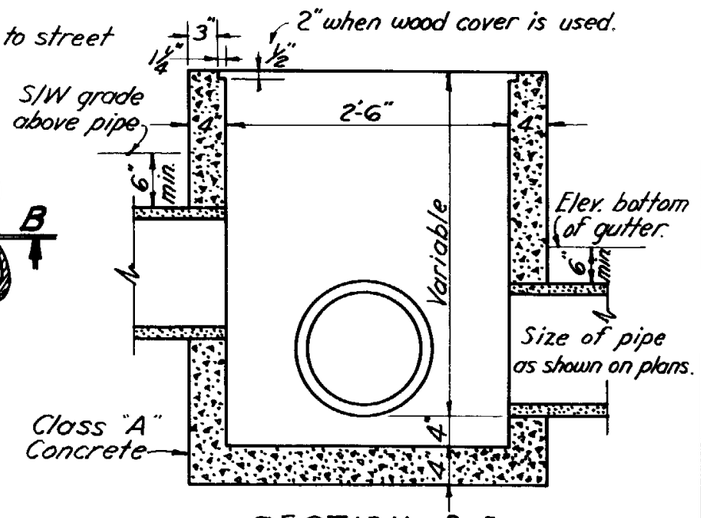

SECTION B-B

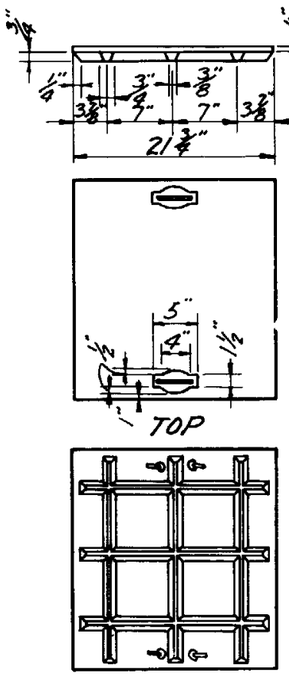

CAST IRON COVER FOR STANDPIPE NO. 1

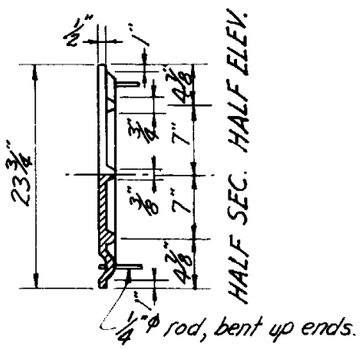

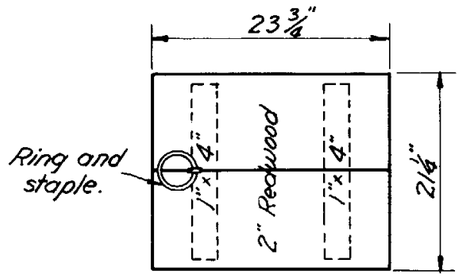

PLAN OF REDWOOD COVER
FOR STANDPIPE NO. 1

Redwood cover may be used when top of standpipe is above sidewalk.

STANDARD IRRIGATION STANDPIPE NO. 1

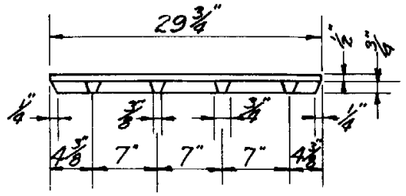

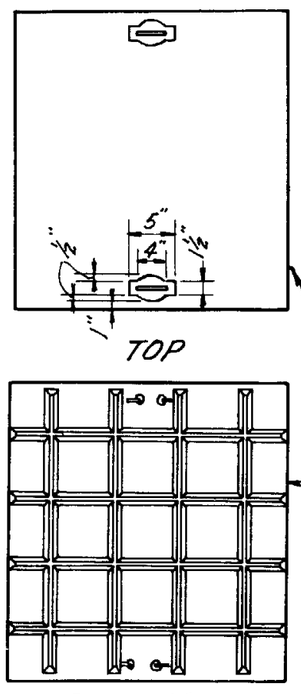

CAST IRON COVER
FOR STANDPIPE NO. 2

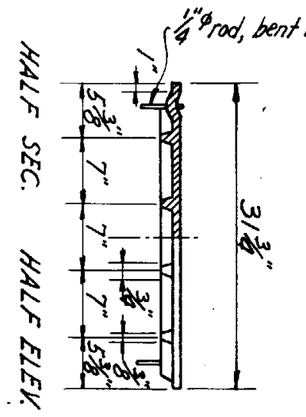

STANDARD IRRIGATION STANDPIPE NO. 2

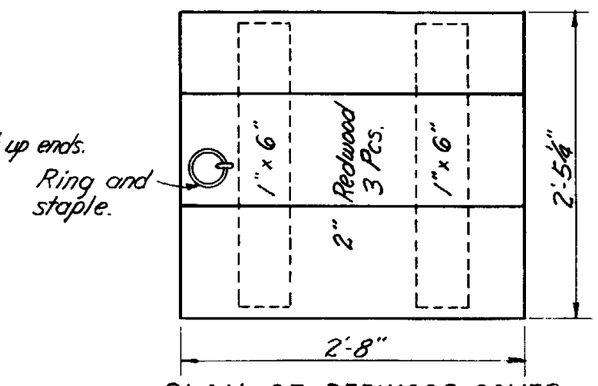

PLAN OF REDWOOD COVER
FOR STANDPIPE NO. 2

Redwood cover may be used when top of standpipe is above sidewalk.

ARIZONA HIGHWAY DEPARTMENT PLANS DIVISION		REV.
IRRIGATION STANDPIPE NO. 1 AND NO. 2		
DRAWN	PHOENIX STANDARD	DRAWING NO.
TRACED	GH DEC. 1945	C-31
CHECKED	HHW	
APPROVED PLANS ENG'R.	HH Wessel	

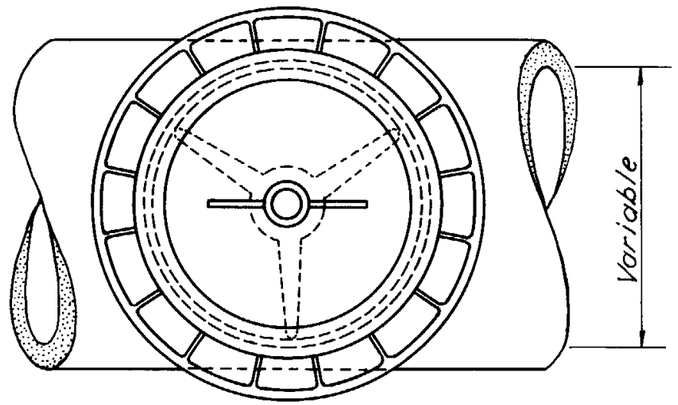

PLAN

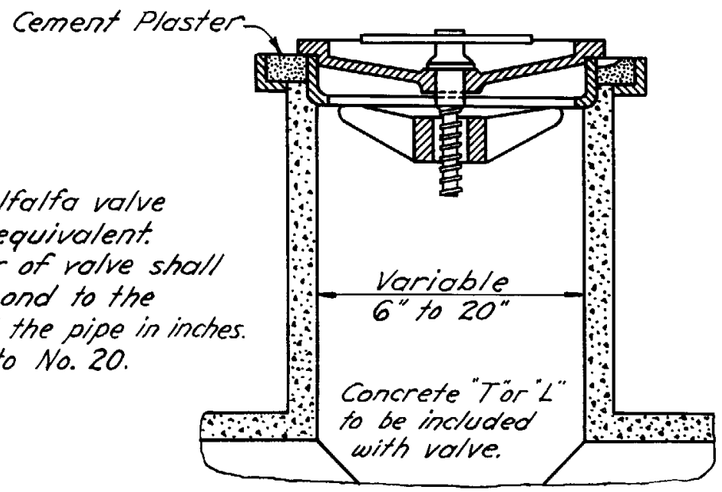

Snow alfalfa valve or its equivalent. Number of valve shall correspond to the size of the pipe in inches. No. 6 to No. 20.

PART SECTION

STANDARD IRRIGATION VALVE

DETAIL "C"

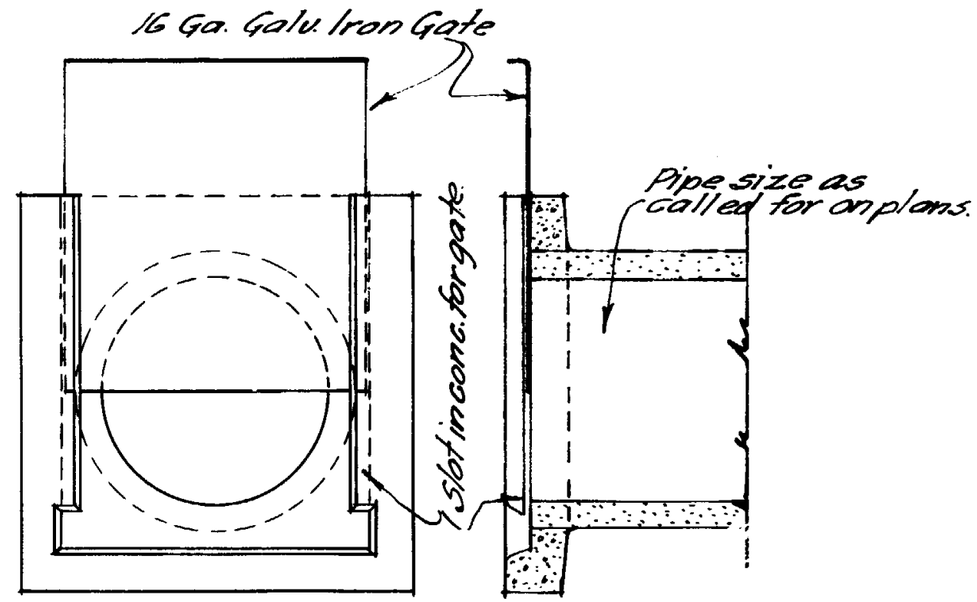

ELEVATION SECTION

STANDARD IRRIGATION HEADGATE

DETAIL "H."

ARIZONA HIGHWAY DEPARTMENT PLANS DIVISION			REV. 8/17/55
IRRIGATION VALVE IRRIGATION GATE			
DRAWN	O.K. Dec. 1935	DRAWING NO.	
TRACED	GH Nov. 1945	C-32	
CHECKED	HHW		
APPROVED PLANS ENGR.	HH Wessel		

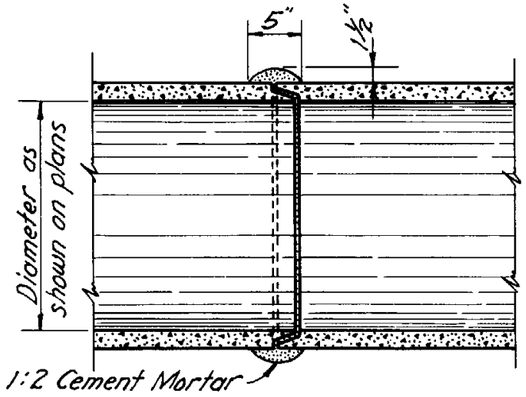

BEVELED END
CONCRETE PIPE

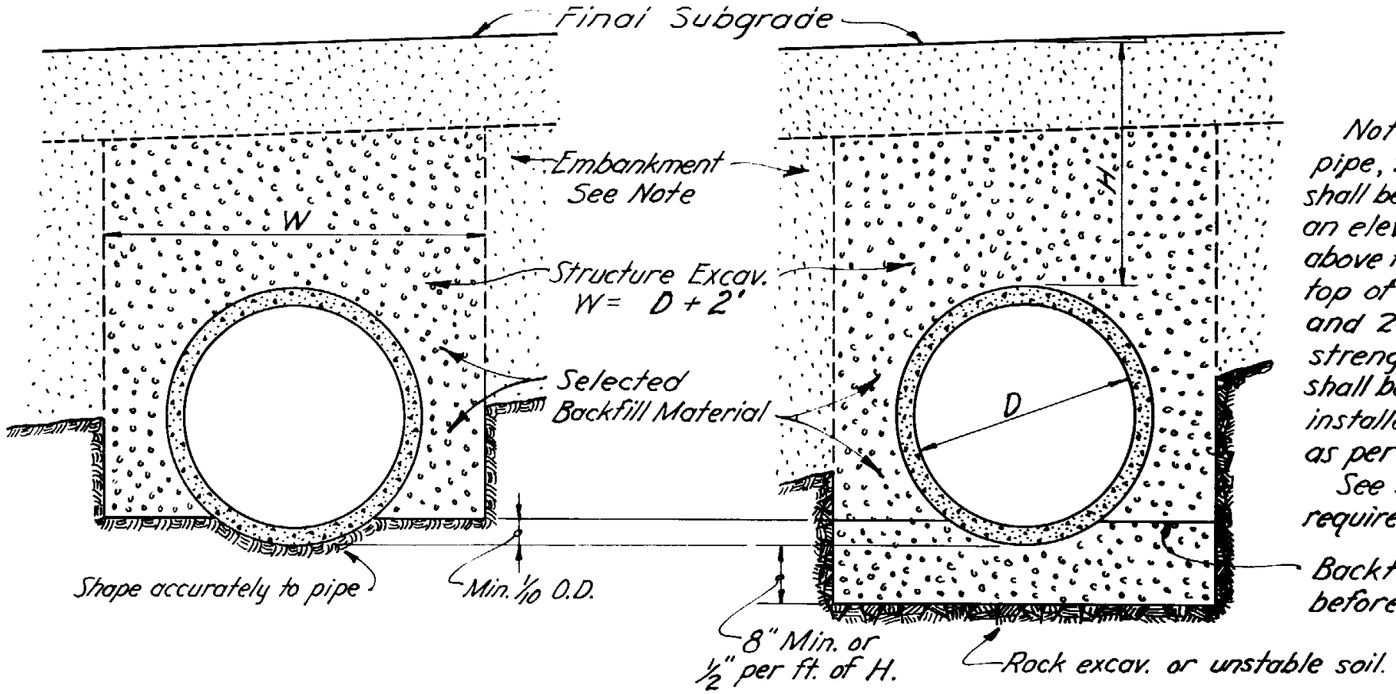

Note— Prior to placing pipe, the roadway embankment shall be placed and compacted to an elevation of at least 9" above the proposed grade for the top of double strength pipe and 24" above the top of std. strength pipe. Then the trench shall be excavated and the pipe installed, backfilled and tamped as per specifications.

See specifications for strength requirements.

TYPICAL INSTALLATION OF CONCRETE OR TILE PIPE

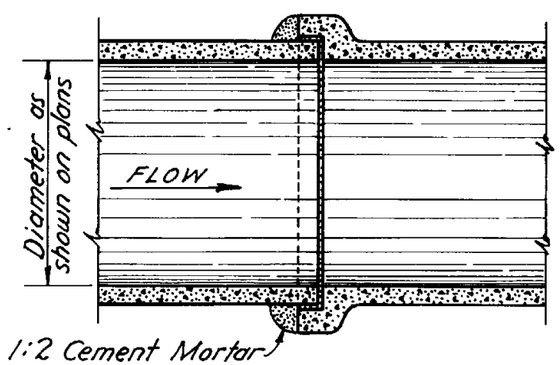

BELL & SPIGOT
CONCRETE PIPE OR
VITRIFIED CLAY PIPE

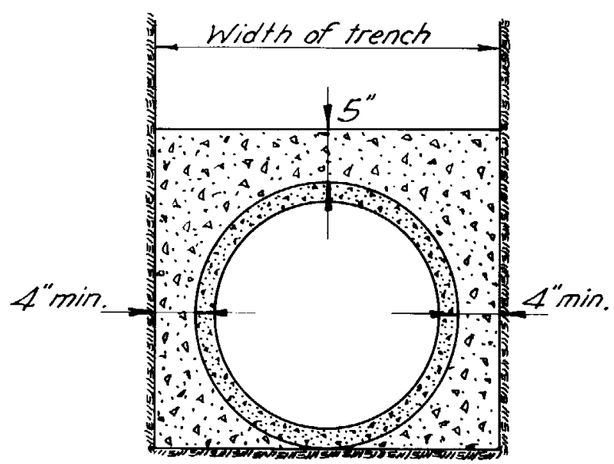

DETAIL "X"
CONCRETE ENCASEMENT

ARIZONA HIGHWAY DEPARTMENT **PLANS DIVISION**		REV.
CONCRETE AND VITRIFIED CLAY PIPE		
DRAWN		DRAWING NO.
TRACED	GH Nov. 1945	C-33
CHECKED		
APPROVED PLANS ENG'R.	H H Wessel	

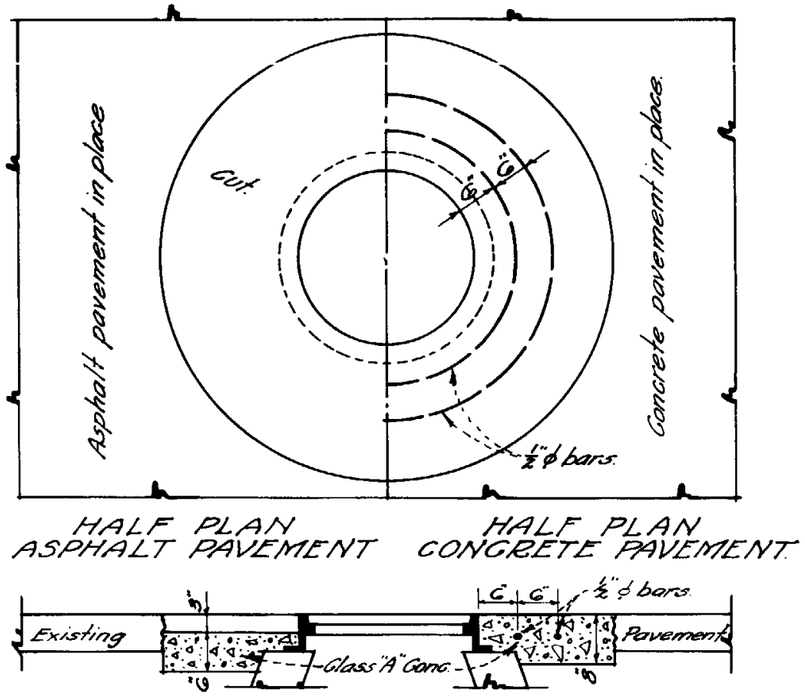

CUT FOR MANHOLE ~ FRAME & COVER NO. 1.

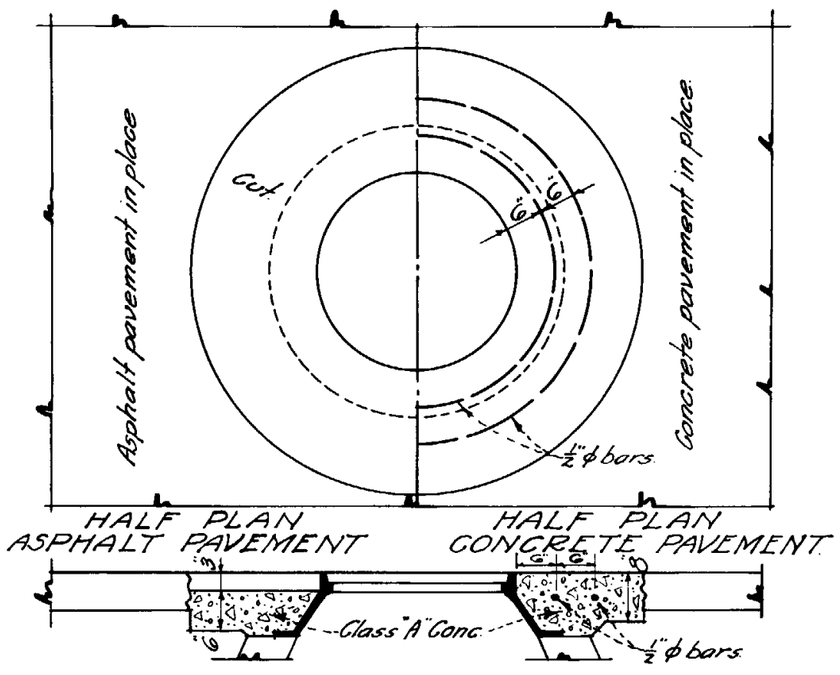

CUT FOR MANHOLE ~ FRAME & COVER NO. 2.

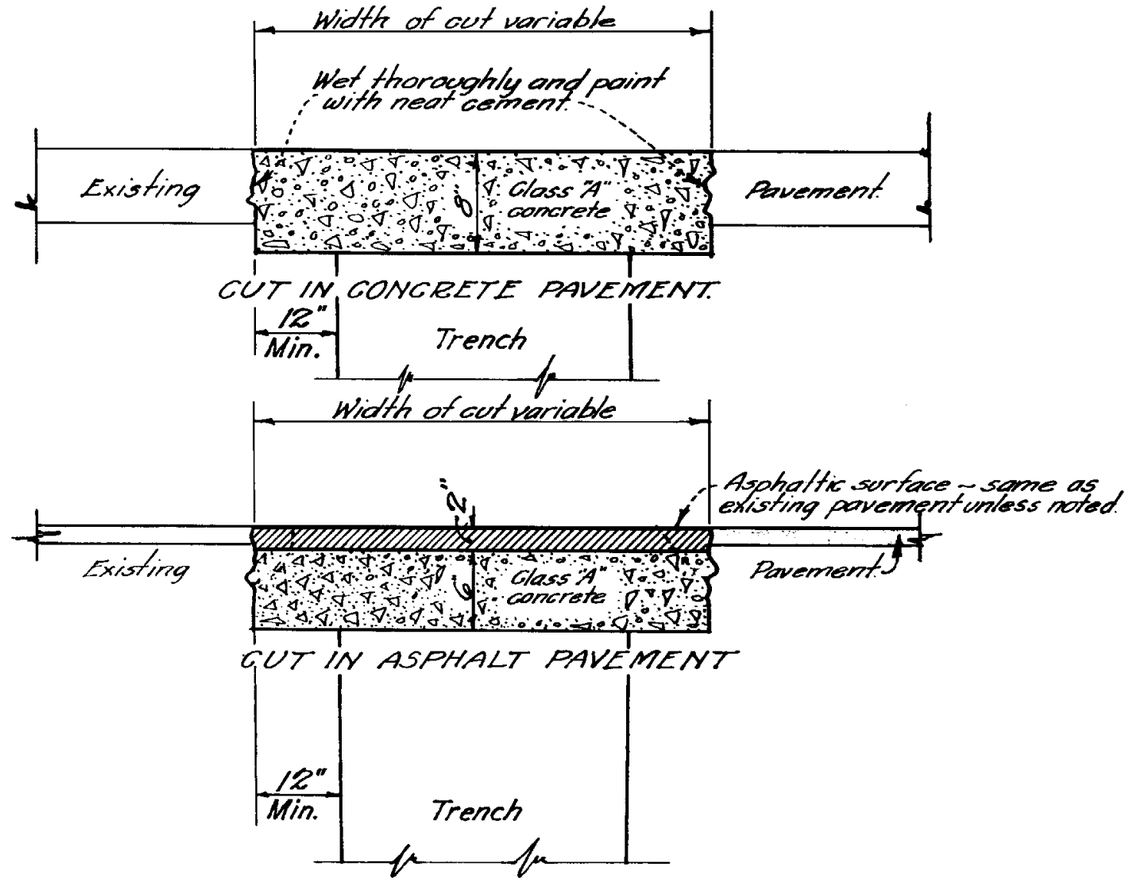

ARIZONA HIGHWAY DEPARTMENT PLANS DIVISION		REV. 3-20-50 6/10/55
PAVEMENT CUT REPLACEMENTS		
DRAWN BY O.K. OCT. 1935 TRACED BY K.S. JULY 1938 CHECKED BY H.H.W. JULY 1938 APPROVED BY Engr. of Plans	DRAWING NO. C-34	

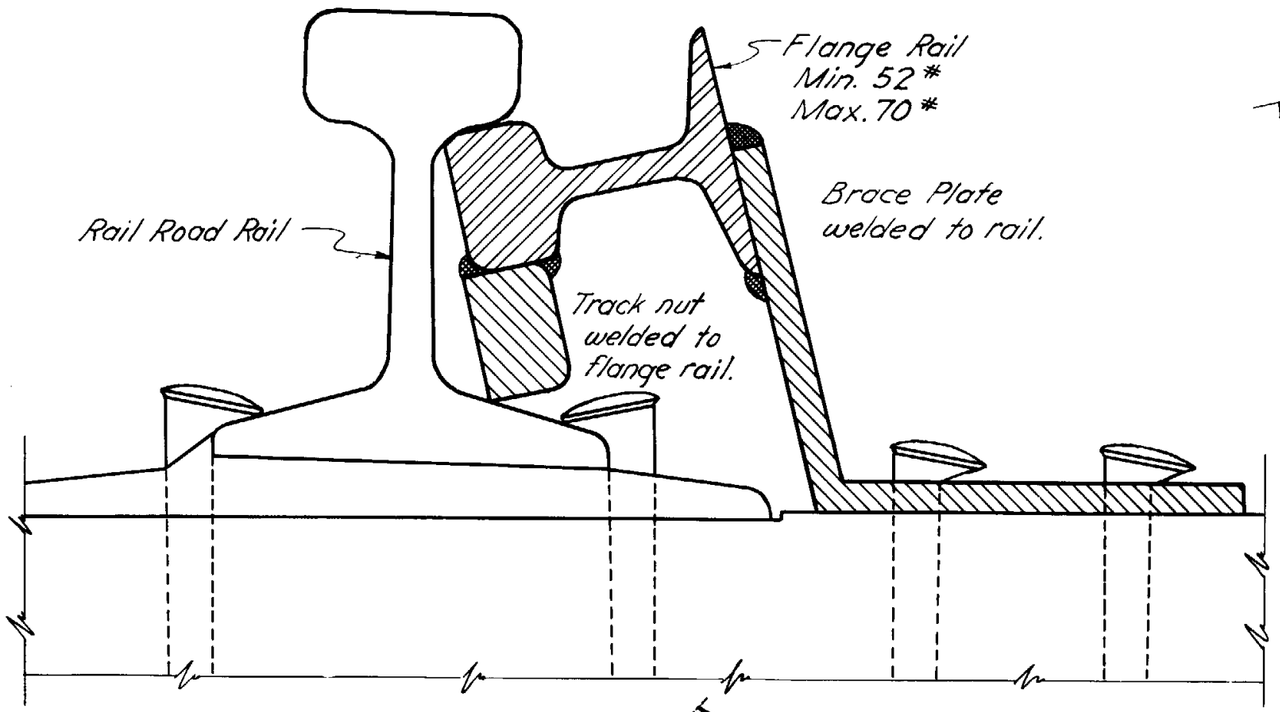

R.R. CROSSING ASSEMBLY DETAILS

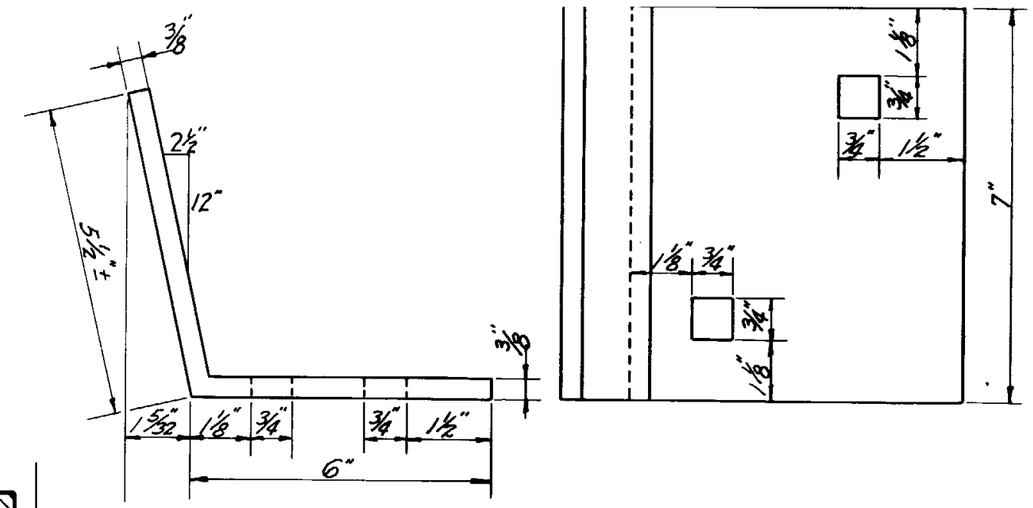

BRACE PLATE FOR FLANGE RAIL

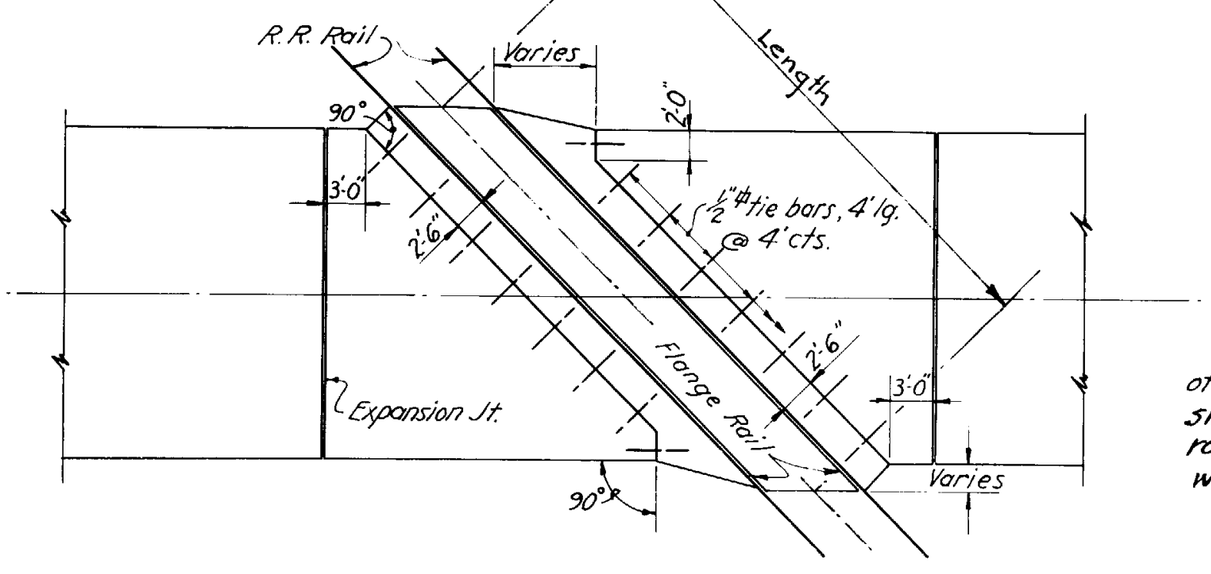

SKEWED R.R. CROSSING FOR CONCRETE PAVEMENT

Notes —

Standard R.R. Crossing consists of two flange rails and necessary number of brace plates and brace nuts. Welded nut and brace plate to be placed every third tie. Construction and assembly details as shown.

Length of R.R. Crossing is noted on plans in lineal feet.

Finished Roadway Surface of crossing (between rails) shall be same as adjacent roadway, unless noted otherwise on plans.

ARIZONA HIGHWAY DEPARTMENT **PLANS DIVISION**		REV.
RAILROAD CROSSING		
DRAWN		DRAWING NO.
TRACED	GH Nov. 1945	C-35
CHECKED	HHW.	
APPROVED PLANS ENG'R.	H H Wessel	

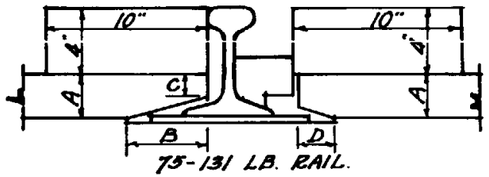

75-131 LB. RAIL.

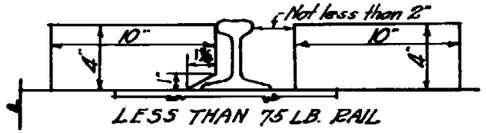

LESS THAN 75 LB. RAIL

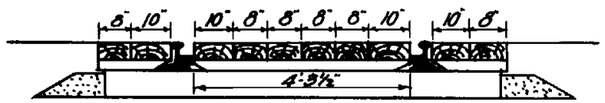

IMPORTANT PUBLIC CROSSINGS
Type C.

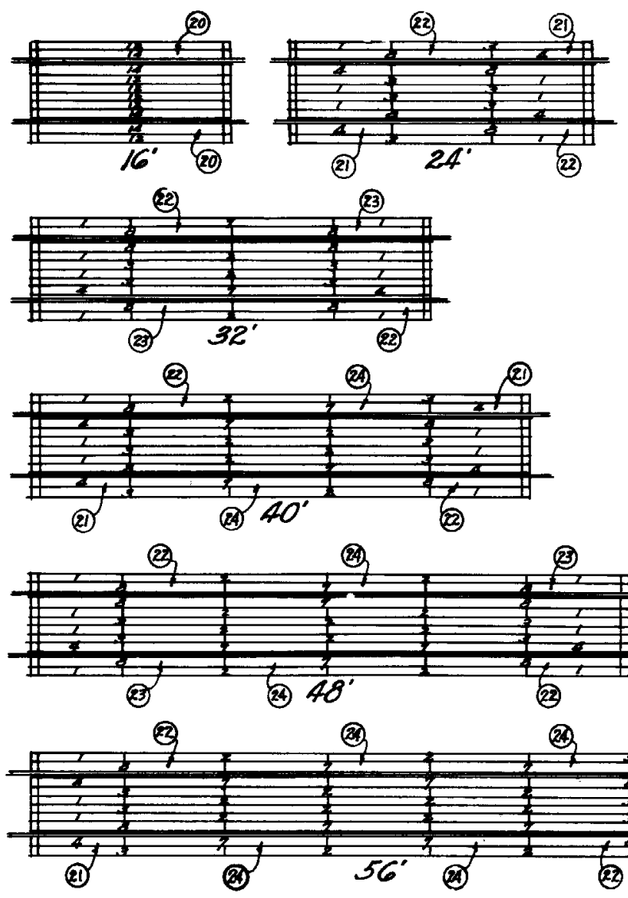

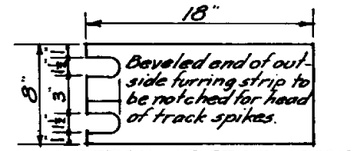

DETAIL OF SPIKE NOTCH.

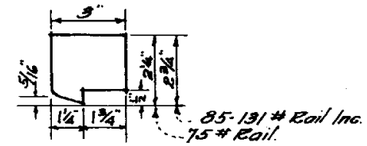

DETAIL OF FLANGWAY FILLER.

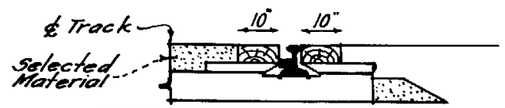

UNIMPORTANT PUBLIC CROSSINGS.
AND PRIVATE CROSSINGS.
Type D.

SECTION AT END OF CROSSING.

BILL OF MATERIAL — TYPE D

Plank No.	Description.	TYPE C IMPORTANT PUBLIC CROSSINGS — 75-131 lb. Rail 16'	24'	32'	40'	48'	56'	Less than 75 lb. Rail 16'	24'	32'	40'	48'	56'	UNIMPORTANT PUBLIC AND PRIVATE CROSSINGS
1	4"x8"x8'-0" one end beveled		6	8	6	8	6		6	8	6	8	6	
2	4"x8"x16'-0"			4	6	10	12			4	6	10	12	
3	4"x8"x16'-0" one end beveled		6	4	6	4	6		6	4	6	4	6	
4	4"x10"x8'-0" " " "		4	2	4	2	4		2	2	2	2	2	
7	4"x10"x16'-0"			1	4	5	8			1	2	3	4	
8	4"x10"x16'-0" one end beveled		4	6	4	6	4		2	2	2	2	2	
12	4"x8"x16'-0" both ends beveled	6						6						
14	4"x10"x16'-0" " " "	4						2						
20	4"x10"x16'-0" " - " base cut							2						
21	4"x10"x8'-0" one end beveled " "								2		2		2	
22	4"x10"x16'-0" " " " " "								2	2	2	2	2	
23	4"x10"x16'-0" " " " " "									2		2		
24	4"x10"x16'-0" base cut										2	2	4	
25	4"x10"x8'-0" both ends beveled													
26	4"x10"x8'-0" both ends beveled base cut													
	Flangeway Fillers - 16'-0" long.	2	3	4	5	6	7							
	Ft. B.M. Planks and Flangeway Filler	601	901	1202	1502	1802	2103	558	837	1116	1395	1674	1953	
	Furring Strips 4"-3½" long	11	16	21	26	31	36							
	" " 18" long	22	32	42	52	62	72							
	20 d Common Nails (31 per lb) No. of lbs.	3	4½	5½	7	8	9½							
*	½"x12" Lag Screws (.68 lb. ea.) (90 lb. rail) "	88½	143	187	231½	275½	320							
	⅝"x12" Boat Spikes (.53 lb. ea.) (and over) "	69	111½	146	180½	215	249½							
*	½"x10" lag screws (.54 lb. ea.) (less than) "	70½	113½	148½	183½	219	254	70½	113½	148½	183½	219	254	
	⅝"x10" boat spikes (.44 lb. ea.) (90 lb. rail) "	57½	92½	121	150	178½	207	57½	92½	121	150	178½	207	
	½" Cut Washers (.27 per lb) "	5	8	10½	13	15	17½	5	8	10½	13	15	17½	

* Gimlet Pointed.

Type C

IMPORTANT PUBLIC CROSSINGS
FURRING STRIP DIMENSIONS AND FT. B.M. PER CROSSING.

	A	B	C	D	16'	24'	32'	40'	48'	56'
75 lb. Rail	5/16"	3"	1/8"	1"	63	91	119	148	176	204
85 " "	1"	4"	1/8"	1"	78	114	149	185	220	255
90 " "	1½"	4"	5/8"	1"	125	182	238	295	352	408
110 " "	2¼"	5"	1"	2"	156	227	298	369	440	510
112 & 130 lb. Rail	2⅝"	5"	1⅜"	2"	187	272	357	442	527	612
131 lb. Rail	3⅛"	5"	1⅜"	2"	219	318	417	516	615	714

For lengths and number required see "BILL OF MATERIAL".

Type D

UNIMPORTANT PUBLIC CROSSINGS
AND PRIVATE CROSSINGS
FURRING STRIP DIMENSIONS & FT. B.M. PER XING.

	A	B	C	D	8'	16'	24'
75 lb. Rail.	5/16"	3"	1/8"	1"	26	47	68
85 " "	1"	4"	1/8"	1"	32	59	85
90 " "	1½"	4"	5/8"	1"	51	94	136
110 " "	2¼"	5"	1"	2"	64	117	170
112 & 130 lb. Rail	2⅝"	5"	1⅜"	2"	77	141	204
131 lb. Rail.	3⅛"	5"	1⅜"	2"	90	164	238

For lengths and number required see "BILL OF MATERIAL"

NOTES

1 -
2 - Optional with Engineer. — planks may be fastened with lag screws or boat spikes, with or without washers under head of either. All planks shall be double fastened at ends and single fastened, staggered, at intermediate ties. Furring strips to be fastened with 20d nails.
3 - All necessary milling shall be done at treating plant before treatment. Dimensions shown are after seasoning and treatment.
4 - Number of plank to be stamped on each plank, as indicated, at treating plant. Encircled numbers on plan sketches denote base cut planks for rails less than 75 lb.
5 - It is desirable to have the track in good condition before crossings are installed. Use of sawed ties is preferable.
6 - Holes for lag screws or boat spikes (boring for boat spikes optional with Engineer) to be bored in the field. ½" diameter for lag screws and ⅝" diameter for boat spikes. Depth of boring for lag screws shall be 8" for 12" lag screws and 6" for 10" lag screws. For boat spikes, holes shall be bored through plank and furring strip only.
7 - Dating nails to be placed in each plank about one foot from south or west end.
8 - Ends of planks must not project past the ties, eliminating the possibility of catching dragging equipement; if necessary, ties must be spaced accordingly.
9 - Planks in crossings having sharp angles of intersection with the track may be stepped to perpit economical use, in which case furring should be cut even with edge of plank and remainder used on other end of crossing.
10 - When ordering planked crossings in which standard layout cannot be used a layout sketch fully dimensioned, shall accompany the order so that all planks may be properly milled at treating plant. Sketch shall show the change from switch tie to cross ties so that the proper thickness furring strips may be furnished.
11 - Outside planks for private crossings may be omitted, in which case also omit one-half of furring strips and hardware shown in tables.

ARIZONA HIGHWAY DEPARTMENT
PLANS DIVISION

REV.

STANDARD RAILROAD PLANKED CROSSINGS

DRAWN BY.	W.M.D. JAN. 1936.	DRAWING NO. C-36
TRACED BY.	K.S. JULY 1938	
CHECKED BY.	H.H.W. JULY 1938	
APPROVED BY Engr. of Plans	H.H. Jessel	

This drawing taken from A.T.&S.F. drawing No. 5658

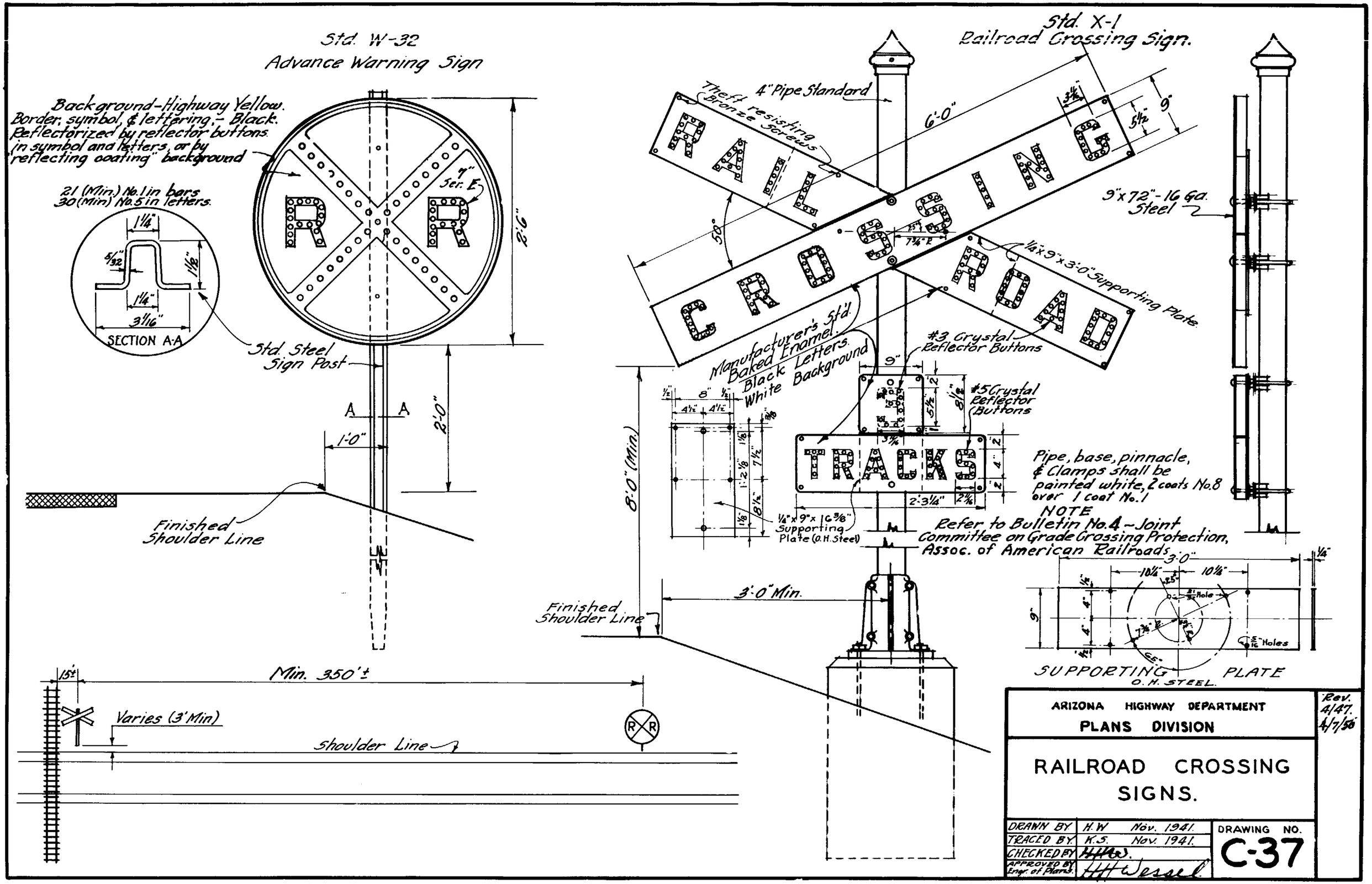
Std. W-32
Advance Warning Sign
Background-Highway Yellow.
Border, symbol, & lettering - Black.
Reflectorized by reflector buttons in symbol and letters, or by "reflecting coating" background
21 (Min.) No. 1 in bars
30 (Min) No. 5 in letters.
SECTION A-A
Std. Steel Sign Post
Finished Shoulder Line
Min. 350'±
Varies (3' Min)
Shoulder Line
Std. X-1
Railroad Crossing Sign.
4" Pipe Standard
Theft resisting Bronze Screws
RAILROAD CROSSING
9"x72"-16 Ga. Steel
1/4"x9"x3'-0" Supporting Plate
Manufacturer's Std'd. Baked Enamel. Black Letters. White Background
#3 Crystal Reflector Buttons
#5 Crystal Reflector Buttons
TRACKS
Pipe, base, pinnacle, & Clamps shall be painted white, 2 coats No. 8 over 1 coat No. 1
NOTE
Refer to Bulletin No. 4 - Joint Committee on Grade Crossing Protection, Assoc. of American Railroads
1/4"x9"x1'-6 3/8" Supporting Plate (O.H. Steel)
3'-0" Min.
SUPPORTING PLATE
O.H. STEEL
ARIZONA HIGHWAY DEPARTMENT
PLANS DIVISION
Rev. 4/47. 4/7/50
RAILROAD CROSSING SIGNS.
DRAWN BY H.W. Nov. 1941.
TRACED BY K.S. Nov. 1941.
CHECKED BY
APPROVED BY Engr. of Plans
DRAWING NO.
C-37

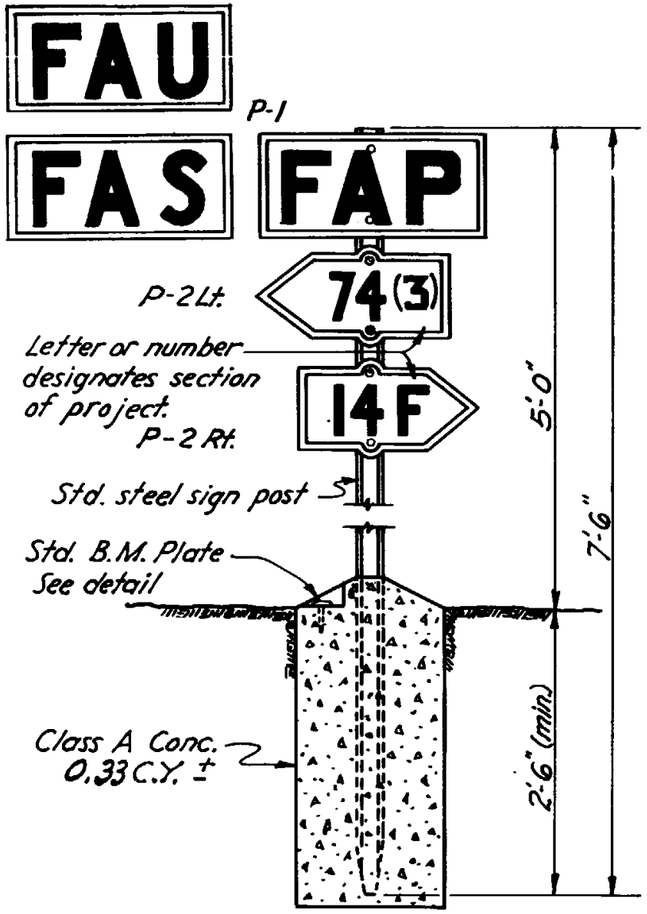

PROJECT MARKER

Project Marker to be furnished by the State and installed and marked by the Project Engineer at each end of all Federal Aid Projects.

Project Markers are to be placed on R/W line, but not more than 100' from ℄ of road if R/W is greater than 100'.

Bench Mark to be established and installed by the Project Engineer on culvert headwalls, bridge curbs, abutment walls, F.A. project markers or other permanent structures.

Location and data shall be noted on "As Built" plans.

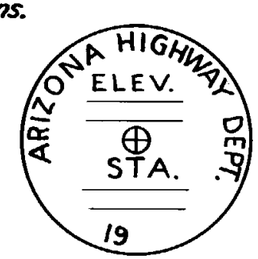

PLAN

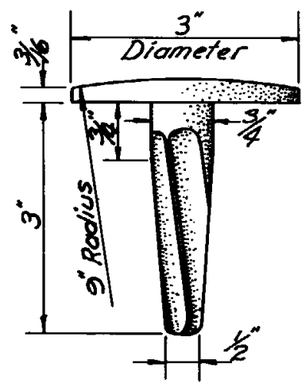

ELEVATION

STD. BENCH MARK

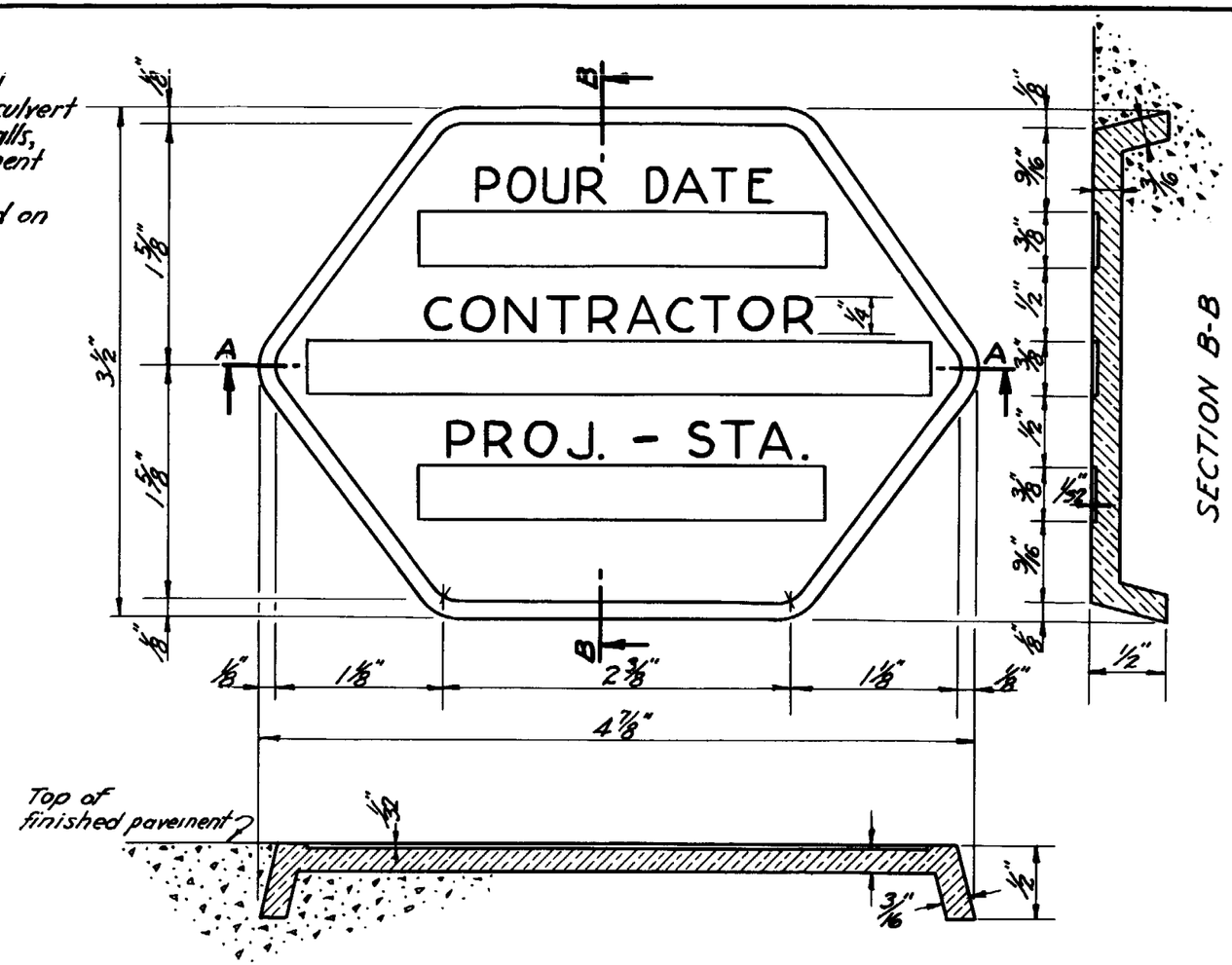

SECTION A-A

CONCRETE CONSTRUCTION MARKER

Scale – Full Size

Marker to be made of brass or bronze, and is to be furnished and placed at beginning and end of each days pour, after marking, by Proj. Engr.

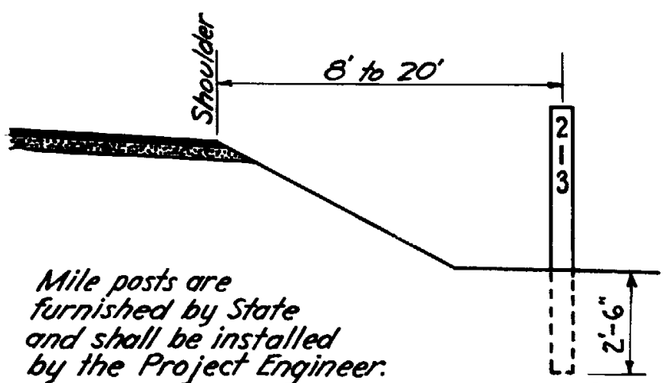

Mile posts are furnished by State and shall be installed by the Project Engineer.

MILE POST

ARIZONA HIGHWAY DEPARTMENT PLANS DIVISION		REV. 3-20-50
PROJECT MARKER MILE POST, BENCH MARKER CONC. CONST. MARKER		
DRAWN		DRAWING NO.
TRACED	GH Nov. 1945	C-38
CHECKED	HHW	
APPROVED PLANS ENG'R.	H.H. Wessel	

CUMULATIVE PERCENT OF CROWN "C" FOR EACH FOOT RIGHT OR LEFT OF ℄

W = FULL WIDTH OF ROADWAY - FEET	1'	2'	3'	4'	5'	6'	7'	8'	9'	10'	11'	12'	13'	14'	15'	16'	17'	18'	19'	20'	21'	22'	23'	24'	25'	26'	27'	28'	29'	30'	31'	32'	33'	34'	35'	36'	37'	38'	39'	40'	41	42'	43'	44'	45'
90	0.05	0.20	0.44	0.79	1.23	1.78	2.42	3.16	4.00	4.94	5.98	7.11	8.35	9.68	11.11	12.64	14.27	16.00	17.83	19.75	21.78	23.90	26.12	28.44	30.86	33.38	36.00	38.72	41.53	44.44	47.46	50.57	53.78	57.09	60.49	64.00	67.61	71.31	75.11	79.01	83.01	87.11	91.31	95.61	C
88	0.05	0.21	0.46	0.83	1.29	1.86	2.53	3.31	4.18	5.17	6.25	7.44	8.73	10.12	11.62	13.22	14.93	16.74	18.65	20.66	22.78	25.00	27.32	29.75	32.28	34.92	37.66	40.50	43.44	46.49	49.64	52.89	56.25	59.71	63.27	66.94	70.71	74.59	78.56	82.64	86.83	91.12	95.51	C	
86	0.05	0.22	0.49	0.87	1.35	1.95	2.65	3.46	4.38	5.41	6.54	7.79	9.14	10.60	12.17	13.85	15.63	17.52	19.52	21.63	23.85	26.18	28.61	31.15	33.80	36.56	39.43	42.40	45.48	48.67	51.97	55.38	58.90	62.52	66.25	70.09	74.02	78.10	82.26	86.53	90.91	95.40	C		
84	0.06	0.23	0.51	0.91	1.42	2.04	2.78	3.63	4.59	5.67	6.86	8.16	9.58	11.11	12.76	14.51	16.38	18.37	20.46	22.68	25.00	27.44	29.99	32.65	35.43	38.32	41.32	44.44	47.68	51.02	54.48	58.05	61.73	65.53	69.44	73.47	77.61	81.86	86.22	90.70	95.29	C			
82	0.06	0.24	0.54	0.95	1.49	2.14	2.91	3.81	4.82	5.95	7.20	8.57	10.05	11.66	13.38	15.23	17.19	19.27	21.48	23.80	26.23	28.79	31.47	34.27	37.18	40.21	43.37	46.64	50.03	53.54	57.17	60.92	64.78	68.77	72.87	77.10	81.42	85.90	90.48	95.18	C				
80	0.06	0.25	0.56	1.00	1.56	2.25	3.06	4.00	5.06	6.25	7.56	9.00	10.56	12.25	14.06	16.00	18.06	20.25	22.56	25.00	27.56	30.25	33.06	36.00	39.06	42.25	45.56	49.00	52.56	56.25	60.06	64.00	68.06	72.25	76.56	81.00	85.56	90.25	95.06	C					
78	0.07	0.26	0.59	1.05	1.64	2.37	3.22	4.20	5.33	6.57	7.96	9.47	11.11	12.89	14.79	16.83	19.00	21.30	23.73	26.30	28.99	31.82	34.78	37.87	41.09	44.44	47.93	51.54	55.29	59.17	63.18	67.32	71.60	76.00	80.54	85.21	90.01	94.94	C						
76	0.07	0.28	0.62	1.11	1.73	2.49	3.39	4.43	5.61	6.93	8.38	9.97	11.70	13.57	15.58	17.73	20.01	22.44	25.00	27.70	30.54	33.52	36.63	39.89	43.28	46.81	50.48	54.29	58.24	62.33	66.55	70.91	75.42	80.06	84.83	89.75	94.81	C							
74	0.07	0.29	0.66	1.17	1.83	2.63	3.58	4.67	5.92	7.30	8.83	10.52	12.34	14.32	16.44	18.70	21.11	23.67	26.37	29.22	32.21	35.35	38.64	42.07	45.65	49.38	53.25	57.27	61.43	65.74	70.20	74.80	79.55	84.44	89.48	94.67	C								
72	0.08	0.31	0.69	1.23	1.93	2.78	3.78	4.94	6.25	7.72	9.34	11.11	13.04	15.12	17.36	19.75	22.30	25.00	27.85	30.86	34.03	37.35	40.82	44.44	48.23	52.16	56.25	60.49	64.89	69.44	74.15	79.01	84.02	89.20	94.52	C									
70	0.08	0.33	0.73	1.31	2.04	2.94	4.00	5.22	6.61	8.16	9.88	11.76	13.80	16.00	18.37	20.90	23.59	26.45	29.47	32.65	36.00	39.51	43.18	47.02	51.02	55.18	59.51	64.00	68.65	73.47	78.45	83.59	88.90	94.37	C										
68	0.09	0.35	0.78	1.38	2.16	3.11	4.24	5.54	7.01	8.65	10.47	12.46	14.62	16.95	19.46	22.15	25.00	28.03	31.23	34.60	38.15	41.87	45.76	49.83	54.07	58.48	63.06	67.82	72.75	77.85	83.13	88.58	94.20	C											
66	0.09	0.37	0.83	1.47	2.29	3.30	4.50	5.87	7.43	9.18	11.10	13.21	15.51	17.99	20.65	23.49	26.52	29.73	33.13	36.71	40.47	44.41	48.54	52.86	57.35	62.03	66.90	71.94	77.17	82.59	88.18	93.97	C												
64	0.10	0.39	0.88	1.56	2.44	3.52	4.79	6.25	7.91	9.77	11.82	14.06	16.50	19.14	21.97	25.00	28.22	31.64	35.25	39.06	43.07	47.27	51.66	56.25	61.04	66.02	71.19	76.56	82.13	87.89	93.85	C													
62	0.10	0.42	0.94	1.66	2.60	3.75	5.10	6.66	8.43	10.41	12.59	14.98	17.59	20.40	23.41	26.64	30.07	33.71	37.56	41.62	45.89	50.36	55.05	59.94	65.04	70.34	75.86	81.58	87.51	93.65	C														
60	0.11	0.44	1.00	1.78	2.78	4.00	5.44	7.11	9.00	11.11	13.44	16.00	18.78	21.78	25.00	28.44	32.11	36.00	40.11	44.44	49.00	53.78	58.78	64.00	69.44	75.11	81.00	87.11	93.44	C															
58	0.12	0.48	1.07	1.90	2.97	4.28	5.83	7.61	9.63	11.89	14.39	17.12	20.10	23.31	26.75	30.44	34.36	38.52	42.93	47.56	52.44	57.55	62.90	68.49	74.32	80.38	86.68	93.22	C																
56	0.13	0.51	1.15	2.04	3.19	4.59	6.25	8.16	10.33	12.76	15.43	18.37	21.56	25.00	28.70	32.65	36.86	41.33	46.05	51.02	56.25	61.73	67.47	73.47	79.72	86.22	92.98	C																	
54	0.14	0.55	1.23	2.19	3.43	4.94	6.72	8.78	11.11	13.72	16.60	19.75	23.18	26.89	30.86	35.12	39.64	44.44	49.52	54.87	60.49	66.39	72.57	79.01	85.73	92.73	C																		
52	0.15	0.59	1.33	2.37	3.70	5.33	7.25	9.47	11.98	14.79	17.90	21.30	25.00	28.99	33.28	37.87	42.75	47.93	53.40	59.17	65.24	71.60	78.25	85.21	92.46	C																			
50	0.16	0.64	1.44	2.56	4.00	5.76	7.84	10.24	12.96	16.00	19.36	23.04	27.04	31.36	36.00	40.96	46.24	51.84	57.76	64.00	70.56	77.44	84.64	92.16	C																				
48	0.17	0.69	1.56	2.78	4.34	6.25	8.51	11.11	14.06	17.36	21.01	25.00	29.34	34.03	39.06	44.44	50.17	56.25	62.67	69.44	76.56	84.03	91.84	C																					
46	0.19	0.76	1.70	3.02	4.73	6.81	9.26	12.10	15.31	18.90	22.87	27.22	31.95	37.05	42.53	48.39	54.63	61.25	68.24	75.61	83.36	91.49	C																						
44	0.21	0.83	1.86	3.31	5.17	7.44	10.12	13.22	16.74	20.66	25.00	29.75	34.92	40.50	46.49	52.89	59.71	66.94	74.59	82.64	91.12	C																							
42	0.23	0.91	2.04	3.63	5.67	8.16	11.11	14.51	18.37	22.68	27.44	32.65	38.32	44.44	51.02	58.05	65.53	73.47	81.86	90.70	C																								
40	0.25	1.00	2.25	4.00	6.25	9.00	12.25	16.00	20.25	25.00	30.25	36.00	42.25	49.00	56.25	64.00	72.25	81.00	90.25	C																									
38	0.28	1.11	2.49	4.43	6.93	9.97	13.57	17.73	22.44	27.70	33.52	39.89	46.81	54.29	62.33	70.91	80.06	89.75	C																										
36	0.31	1.23	2.78	4.94	7.72	11.11	15.12	19.75	25.00	30.86	37.35	44.44	52.16	60.49	69.44	79.01	89.20	C																											
34	0.35	1.38	3.11	5.50	8.65	12.46	16.96	22.15	28.03	34.60	41.87	49.83	58.48	67.82	77.85	88.58	C																												
32	0.39	1.56	3.52	6.25	9.77	14.06	19.14	25.00	31.64	39.06	47.27	56.25	66.02	76.56	87.89	C																													
30	0.44	1.78	4.00	7.11	11.11	16.00	21.78	28.44	36.00	44.44	53.78	64.00	75.11	87.11	C																														
28	0.51	2.04	4.59	8.16	12.76	18.37	25.00	32.65	41.33	51.02	61.73	73.47	86.22	C																															
26	0.59	2.37	5.33	9.47	14.79	21.30	28.99	37.87	47.93	59.17	71.60	85.21	C																																
24	0.69	2.78	6.25	11.11	17.36	25.00	34.03	44.44	56.25	69.44	84.03	C																																	
22	0.83	3.31	7.44	13.22	20.66	29.75	40.50	52.89	66.94	82.64	C																																		
20	1.00	4.00	9.00	16.00	25.00	36.00	49.00	64.00	81.00	C																																			
18	1.23	4.94	11.11	19.75	30.86	44.44	60.49	79.01	C																																				
16	1.56	6.25	14.06	25.00	39.06	56.25	76.56	C																																					
14	2.04	8.16	18.37	32.65	51.02	73.47	C																																						
12	2.78	11.11	25.00	44.44	69.44	C																																							

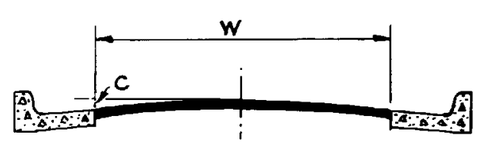

INTERPRETATION OF "W" AND "C"
WHERE CURBS AND GUTTERS ARE USED

FORMULA

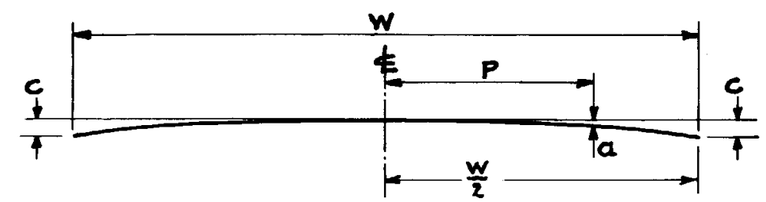

$$\frac{a}{C} = \frac{P^2}{\left(\frac{W}{2}\right)^2} \quad \text{OR} \quad a = \frac{CP^2}{\left(\frac{W}{2}\right)^2}$$

USE OF TABLE

EXAMPLE:

ASSUME W = 40 FT. AND C = 0.45 FT.
FIND a IF P = 8 FT.

TABLE SHOWS a = 16.00% OF C, OR 0.45 x 0.16 = 0.072 FT.

ARIZONA STATE HIGHWAY DEPARTMENT PLANS DIVISION	REV.
PARABOLIC CROWN FORMULA AND TABLE	
CALCULATED AND DRAWN JUNE 1941 BY LESLIE McDOUGALL - HIGHWAY DESIGNER	STANDARD DRWG. NO.
CHECKED BY	C-39
APPROVED BY ENGINEER OF PLANS H.H. Vessel	

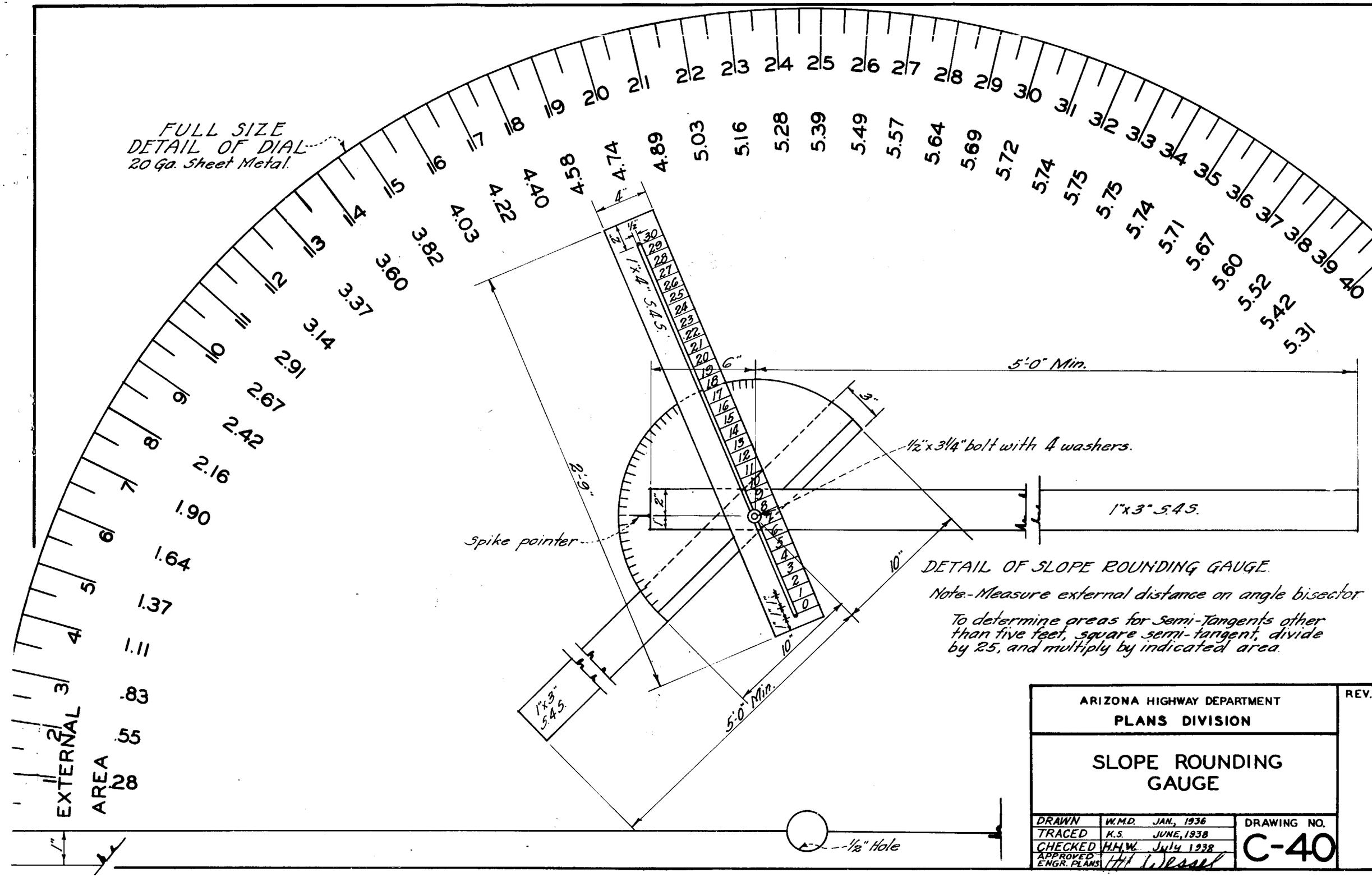
FULL SIZE
DETAIL OF DIAL
20 Ga. Sheet Metal.
EXTERNAL AREA
1"x4" S.4S.
1"x3" S.4S.
1"x3" S.4S.
5'-0" Min.
5'-0" Min.
6"
3"
2'-9"
10"
10"
4"
1/2"x3 1/4" bolt with 4 washers.
Spike pointer
1/2" Hole
DETAIL OF SLOPE ROUNDING GAUGE
Note.-Measure external distance on angle bisector
To determine areas for Semi-Tangents other than five feet, square semi-tangent, divide by 25, and multiply by indicated area.
ARIZONA HIGHWAY DEPARTMENT
PLANS DIVISION
SLOPE ROUNDING GAUGE
REV.
DRAWN W.M.D. JAN., 1936
TRACED K.S. JUNE, 1938
CHECKED H.H.W. July 1938
APPROVED ENGR. PLANS
DRAWING NO.
C-40

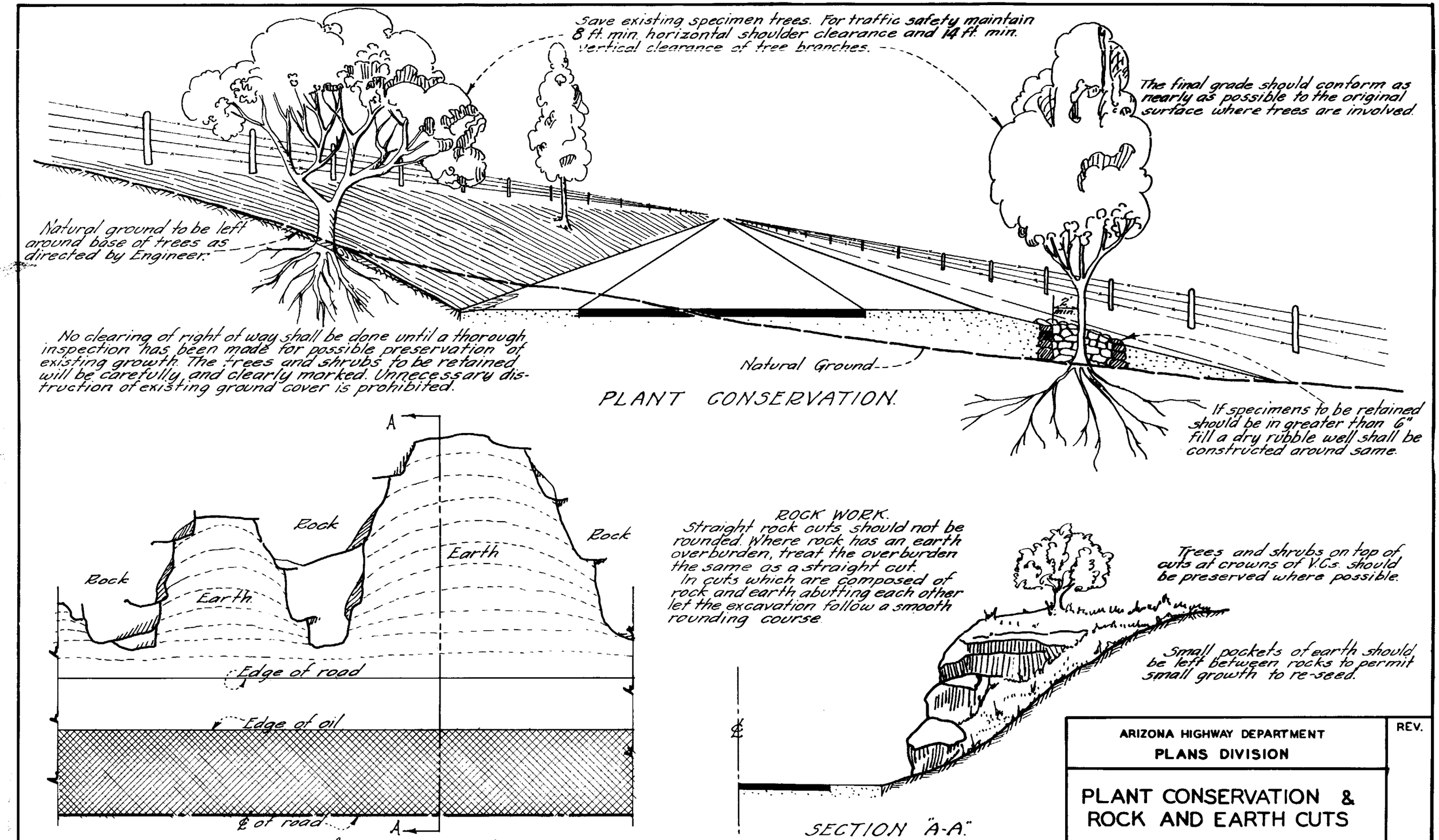
Save existing specimen trees. For traffic safety maintain 8 ft. min. horizontal shoulder clearance and 14 ft. min. vertical clearance of tree branches.
The final grade should conform as nearly as possible to the original surface where trees are involved.
Natural ground to be left around base of trees as directed by Engineer.
No clearing of right of way shall be done until a thorough inspection has been made for possible preservation of existing growth. The trees and shrubs to be retained will be carefully and clearly marked. Unnecessary distruction of existing ground cover is prohibited.
Natural Ground
PLANT CONSERVATION.
If specimens to be retained should be in greater than 6" fill a dry rubble well shall be constructed around same.
A
Rock
Rock
Rock
Earth
Earth
Edge of road
Edge of oil
℄ of road
A
PLAN ~ ROCK & EARTH CUT.
ROCK WORK.
Straight rock cuts should not be rounded. Where rock has an earth overburden, treat the overburden the same as a straight cut.
In cuts which are composed of rock and earth abutting each other let the excavation follow a smooth rounding course.
Trees and shrubs on top of cuts at crowns of V.C.s. should be preserved where possible.
Small packets of earth should be left between rocks to permit small growth to re-seed.
℄
SECTION "A-A"
ARIZONA HIGHWAY DEPARTMENT
PLANS DIVISION
REV.
PLANT CONSERVATION & ROCK AND EARTH CUTS
DRAWN W.M.D. JAN., 1936
TRACED K.S. JUNE, 1938
CHECKED H.H.W. July, 1938
APPROVED ENGR. PLANS H H Wessel
DRAWING NO.
C-41

TYPICAL INSTALLATION PLAN OF ROAD GUARD AT BRIDGE APPROACHES

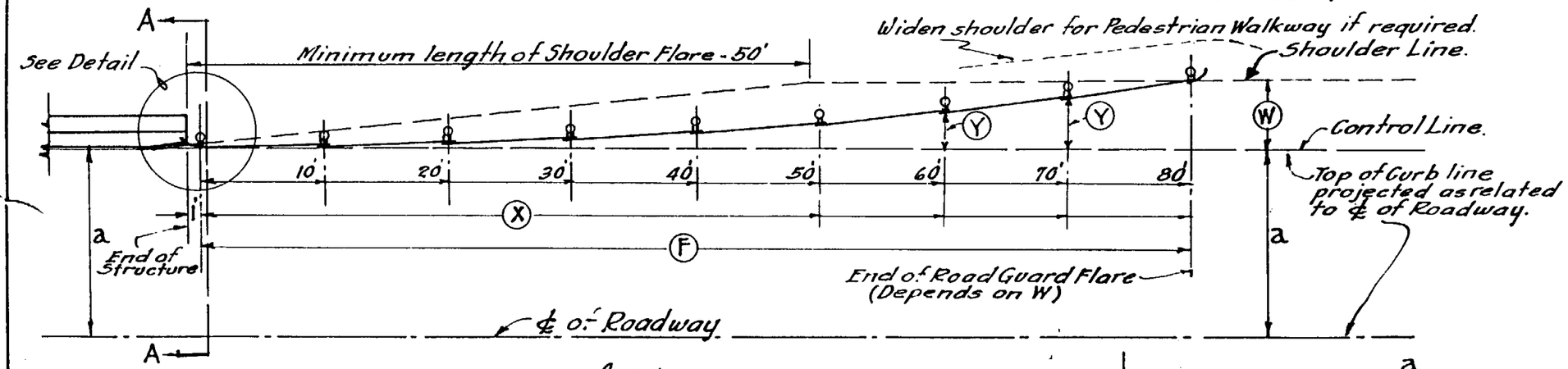

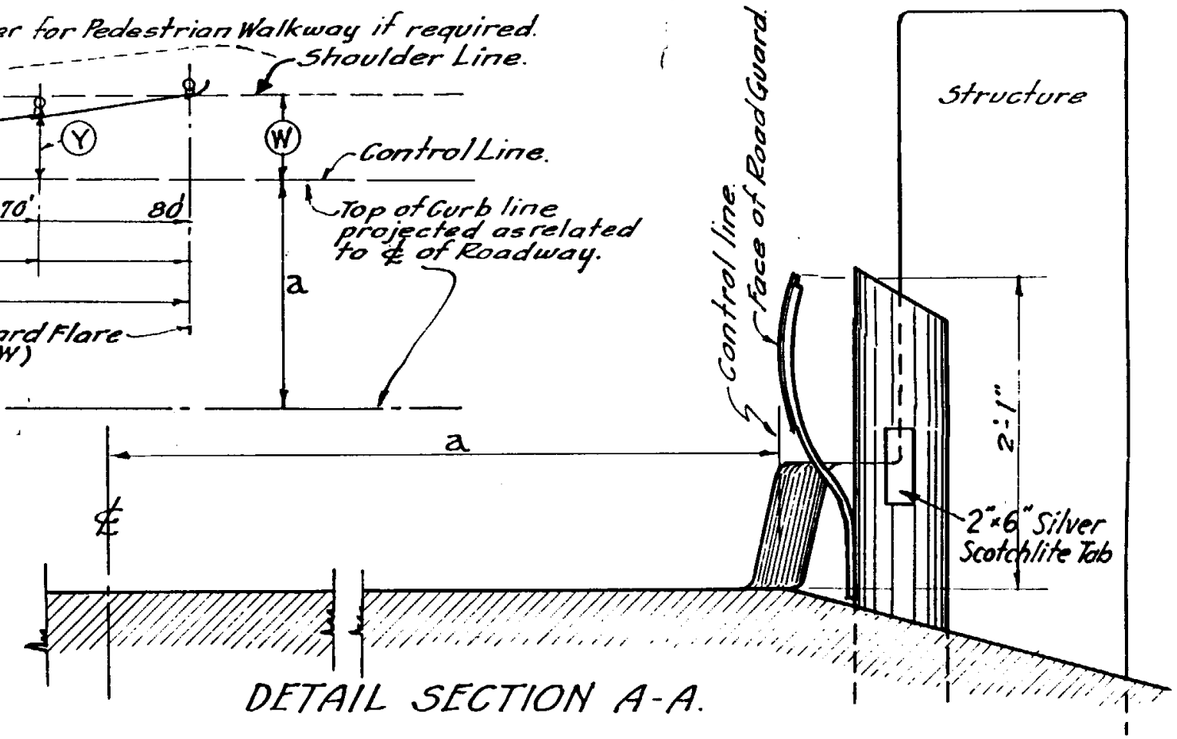

DETAIL SECTION A-A.

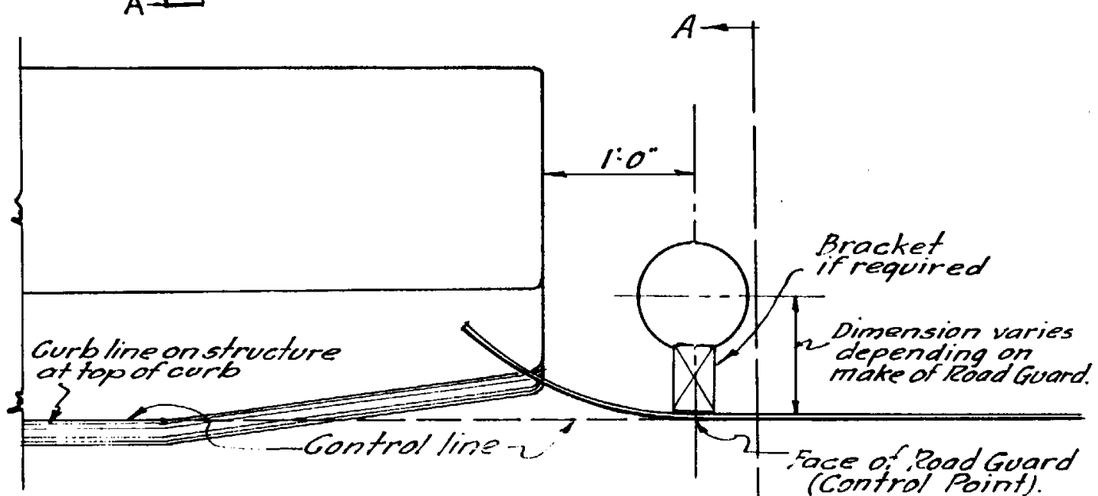

DETAIL PLAN
AT END OF STRUCTURE

Basic formula for Road Guard Flare.

$$Y = W \frac{X^2}{F^2}$$

- W = Offset from top of Curb line (Control line) to Shoulder line.
- F = Length of Road Guard flare.
- X = Distance from beginning post away from structure.
- Y = Offset to face of Road Guard at each post.

X	Y					
	W = 3	W = 4	W = 5	W = 6	W = 7	W = 8
10	0.12	0.11	0.10	0.09	0.09	0.08
20	0.48	0.44	0.41	0.38	0.35	0.32
30	1.08	1.00	0.92	0.85	0.78	0.72
40	1.92	1.78	1.63	1.49	1.38	1.28
50	3.00	2.78	2.55	2.34	2.16	2.00
60		4.00	3.67	3.38	3.11	2.88
70			5.00	4.59	4.24	3.92
80				6.00	5.53	5.12
90					7.00	6.48
100						8.00
	F = 50	F = 60	F = 70	F = 80	F = 90	F = 100

GENERAL NOTES :–

When value of "W" is different than shown in Table, then use Basic formula to find values for Y.

When Road Guard is to be continued beyond end of Road Guard Flare required for "W" offset, the face of Road Guard shall then be continued at the shoulder line, Modify last offset to avoid kink.

When "W" = 0, no flare is required. Shoulder line is then the control line.

Offset from Roadway ℄ = Y + a – All figures are expressed in feet.

Place Road Guard both sides of roadway.

ARIZONA HIGHWAY DEPARTMENT
PLANS DIVISION

REV. 3/17/50

INSTALLATION OF ROAD GUARD AT STRUCTURE APPROACHES

DRAWN	L. McDougall 1/10/49	DRAWING NO.
TRACED	K. Stokoe 1/12/49	C-42
CHECKED	L. McDougall 1/20/49	
APPROVED ENG'R. PLANS	H.H. Wessel 1/20/49	