F.H.W.A. REGION	STATE	PROJECT NO.	SHEET NO.	TOTAL SHEETS	AS BUILT
9	ARIZ.				

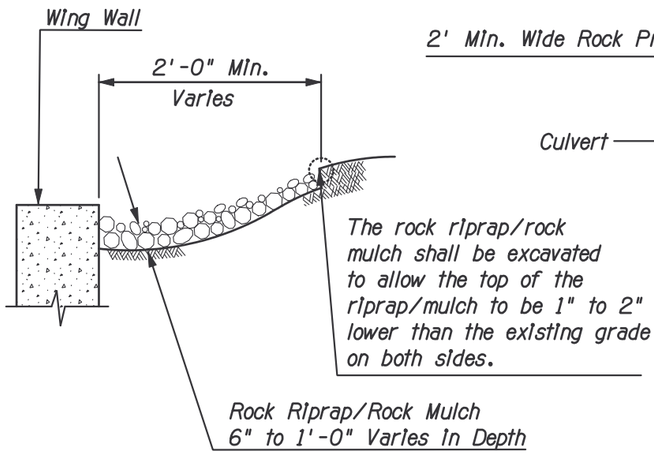

ROCK RIPRAP/ROCK MULCH FOR HEADWALL TRANSITION
CROSS SECTION (NTS)

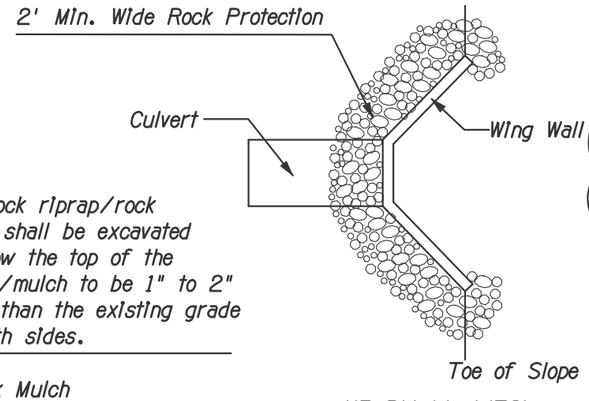

HEADWALL (NTS)

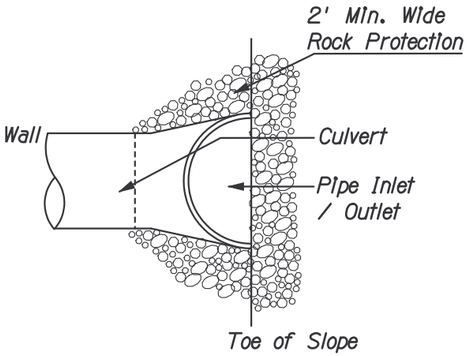

FLARED END SECTION (NTS)

DETAIL E2

NOTE:
Cut and fill transition should be placed as shown on plans or where the length of the roadside ditch is 50 feet or greater. Field adjustment may be necessary as per the direction of Engineer.

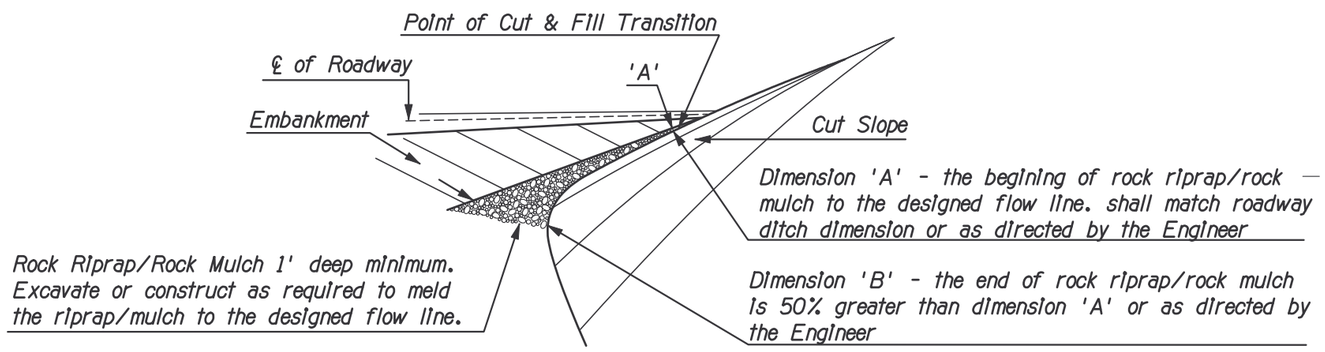

EMBANKMENT-CUT/FILL-SLOPE
TRANSITION PERSPECTIVE (NTS)

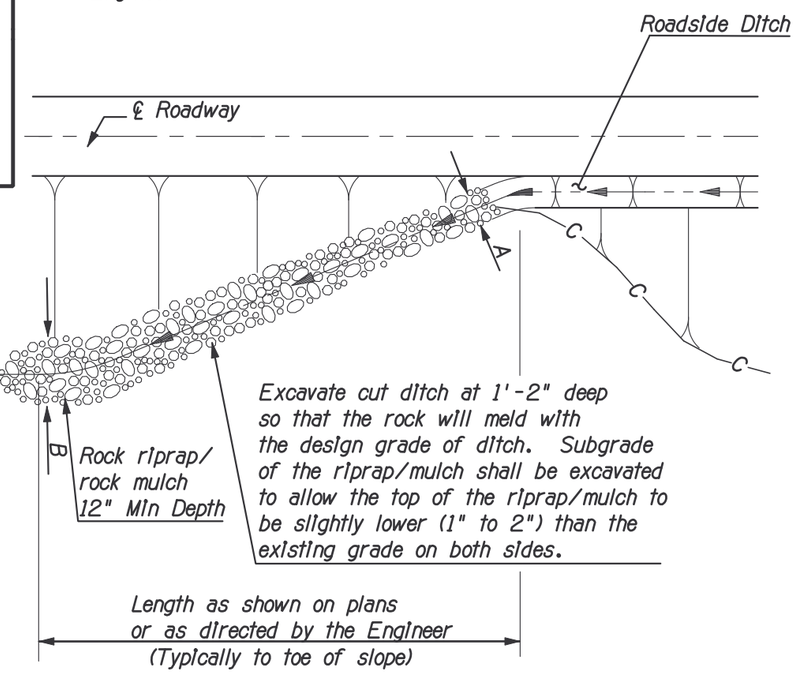

CUT AND FILL TRANSITION
PLAN VIEW

DETAIL E3

CUT & FILL TRANSITION
ROCK RIPRAP/ROCK MULCH CHANNEL LINING

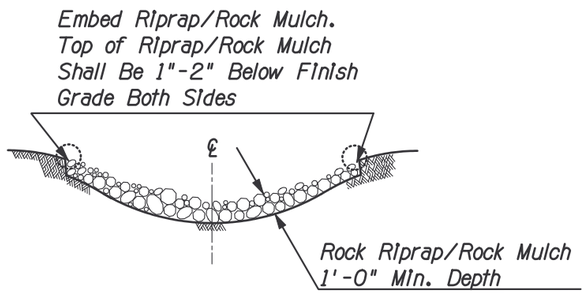

CUT AND FILL TRANSITION
ROCK RIPRAP/ROCK MULCH CHANNEL LINING
CROSS SECTION (NTS)

GENERAL NOTES FOR DETAIL E2 & E3:
ROCK RIPRAP/ROCK MULCH IN THE CLEAR ZONE/RECOVERY AREA

Rock Riprap/Rock Mulch within the traffic Clear Zone/Recovery Area shall conform to the requirements of Section 810-2.03 Sieve Size Gradation A and/or Gradation C, and Section 913.

The minimum depth of the rock riprap/rock mulch shall be 12" for Channel Lining and Cut & Fill Transition. The ground surface shall be excavated to a depth that the rock will meld with the grade of the ditch.

Within traffic recovery area/clear zone, any rock size 4 inches or greater shall be imbedded into the finished grade so that any portion of the rock above the grade will be less than 4 inches in height.

	NAME	DATE	ARIZONA DEPARTMENT OF TRANSPORTATION INTERMODAL TRANSPORTATION DIVISION ROADSIDE DEVELOPMENT SECTION
DESIGN	E LEROY BRADY	2-2006	
DESIGN	ZITAO FANG	2-2006	
DRAWN	ZITAO FANG	2-2006	EROSION/SEDIMENT CONTROL AND WATER QUALITY PROTECTION DETAILS
CHECKED	E LEROY BRADY	2-2006	
TEAM LEADER	E LEROY BRADY	2-2006	
ROUTE	MP	LOCATION	SHEET OF
TRACS NO.			___ OF ___

NO.	DESCRIPTION OF REVISION	DATE	MADE BY
NO.1			
NO.2			