MATERIALS

TESTING MANUAL

SAMPLING AND TESTING PROCEDURES

PREPARED BY:
ARIZONA DEPARTMENT OF TRANSPORTATION
INTERMODAL TRANSPORTATION DIVISION
MATERIALS GROUP

REVISED TO CHANGE LETTER NO. 23
(November 14, 2008)

November 14, 2008
(5 Pages)

MATERIALS TESTING MANUAL

TABLE OF CONTENTS

Introduction (June 17, 2008)
Glossary of Terms (July 15, 2005)

SERIES 100 SAMPLING**

ARIZ 103a Sampling Bituminous Materials
ARIZ 104c Sampling Bituminous Mixtures
ARIZ 105d Sampling Soils and Aggregates
ARIZ 108 Sampling Hydrated Lime and Lime Products
ARIZ 109 Sampling Metallic Materials
ARIZ 110 Sampling Miscellaneous Materials

** The above Arizona Test Methods, and also commonly used AASHTO procedures in this category, are shown on Series 100 Cover Sheet (November 14, 2008).

SERIES 200 SOILS AND AGGREGATES**

ARIZ 201c Sieving of Coarse and Fine Graded Soils and Aggregates
ARIZ 205c Composite Grading
ARIZ 210b Specific Gravity and Absorption of Coarse Aggregate
ARIZ 211d Specific Gravity and Absorption of Fine Aggregate
ARIZ 212e Percentage of Fractured Coarse Aggregate Particles
ARIZ 220 Determination of Cement Content Required for Cement Treated Mixtures
ARIZ 221 Moisture-Density Relations of Cement Treated Mixtures
ARIZ 222b Rock Correction Procedure for Maximum Density Determination of Cement Treated Mixtures
ARIZ 223 Field Density of Cement Treated Mixtures by Sand Cone Method or by Rubber Balloon Method
ARIZ 225a Maximum Dry Density and Optimum Moisture of Soils by Proctor Method A
ARIZ 226 Maximum Density and Optimum Moisture of Soils - Methods C and D
ARIZ 227c Rock Correction Procedure for Maximum Dry Density and Optimum Moisture Content Determination

ARIZ 229a Calibration of Standard Sand and Sand Cone
ARIZ 230a Field Density by the Sand Cone Method
ARIZ 232b Moisture-Density Relationship Using Typical Moisture-Density Curves (One Point Proctor) Method A
ARIZ 233c Flakiness Index of Coarse Aggregate
ARIZ 235 Density and Moisture Content of Soil and Soil-Aggregate Mixtures by the Nuclear Method
ARIZ 236b Determining pH and Minimum Resistivity of Soils and Aggregates
ARIZ 237b Determining pH and Soluble Salts of Soils
ARIZ 238a Percent Carbonates in Aggregate
ARIZ 240a Sieve Analysis and Separation of Salvaged AC Pavement Particles for Recycled Asphaltic Concrete
ARIZ 241a Compressive Strength of Molded Cement Treated Base or Soil-Cement Specimens
ARIZ 242a Sand Equivalent Test for Mineral Aggregate for Asphaltic Concrete Friction Course
ARIZ 244 Artificial Grading of Mineral Aggregate
ARIZ 245 Maximum Dry Density and Optimum Moisture of Soils by Proctor Alternate Method D
ARIZ 246a Moisture-Density Relationship using Typical Moisture-Density Curves (One Point Proctor) Alternate Method D
ARIZ 247 Particle Shape and Texture of Fine Aggregate Using Uncompacted Void Content
ARIZ 248 Alternate Procedures for Sieving of Coarse and Fine Graded Soils and Aggregates
ARIZ 249 Remolded Ring Samples for Direct Shear, Swell, and Consolidation
ARIZ 251 Combined Coarse and Fine Aggregate Specific Gravity and Absorption

****** The above Arizona Test Methods, and also commonly used AASHTO procedures in this category, are shown on Series 200 Cover Sheet (November 14, 2008).

SERIES 300 CONCRETE**

ARIZ 308a Method of Adjusting Concrete Mixes for Variations in Moisture Content
ARIZ 309a Testing Impervious Materials and Compounds for Curing Concrete
ARIZ 310a Measuring Texture Depth of Portland Cement Concrete with Metal Tine Finish

ARIZ 311a Method of Test for Flow of Grout Mixtures (Flow Cone Method)
ARIZ 314b Compressive Strength of Cylindrical Concrete Specimens
ARIZ 315 Precast Mortar Blocks Test
ARIZ 317a Obtaining and Testing Drilled Cores and Sawed Beams of Concrete

****** The above Arizona Test Methods, and also commonly used AASHTO and ASTM procedures in this category are show on Series 300 Cover Sheet (December 15, 2006).

SERIES 400 BITUMINOUS MIXTURES**

ARIZ 406c Moisture Content of Bituminous Mixtures
ARIZ 410c Compaction and Testing of Bituminous Mixtures Utilizing 101.6 mm (Four Inch) Marshall Apparatus
ARIZ 411 Determination of Transverse Distributor Spread Rate
ARIZ 412b Density of Compacted Bituminous Mixtures by the Nuclear Method
ARIZ 413 Extraction of Asphalt from Bituminous Mixtures by Soxhlet Extraction
ARIZ 415c Bulk Specific Gravity and Bulk Density of Compacted Bituminous Mixtures
ARIZ 416d Preparing and Splitting Field Samples of Bituminous Mixtures for Testing
ARIZ 417b Maximum Theoretical Specific Gravity of Field Produced Bituminous Mixtures (Rice Test)
ARIZ 421 Bituminous Material Content of Asphaltic Concrete Mixtures by the Nuclear Method
ARIZ 422 Compaction and Testing of Bituminous Mixtures Utilizing 152.4 mm (Six Inch) Marshall Apparatus
ARIZ 424a Determination of Air Voids in Compacted Bituminous Mixtures
ARIZ 427 Asphalt Binder Content of Asphaltic Concrete Mixtures by the Ignition Furnace Method

****** The above Arizona Test Methods, and also commonly used AASHTO procedures in this category, are show on Series 400 Cover Sheet (November 14, 2008).

SERIES 500 BITUMINOUS MATERIALS**

ARIZ 502b Percentage of Uncoated Particles Using Asphalt Emulsions
ARIZ 504 Vacuum Recovery of Asphalt Emulsion Residue
ARIZ 505a Asphalt Rejuvenating Agent Residue Insoluble in Petroleum Ether
ARIZ 509a Rapid Determination of Asphaltenes and Chemical Reactivity of Asphalts

ARIZ 511 Recovery of Asphalt from Extraction Solution
ARIZ 512a Residue by Evaporation

****** The above Arizona Test Methods, and also commonly used AASHTO and ASTM procedures and specifications are shown on Series 500 Cover Sheet (July 15, 2005).

SERIES 600 CEMENT AND RELATED MATERIALS**

****** Commonly used AASHTO and ASTM procedures in this category are show on Series 600 Cover Sheet (July 15, 2005).

SERIES 700 CHEMICAL AND SPECIALTY**

ARIZ 702a Testing of Paint, Varnish, Lacquer, and Related Material
ARIZ 714b Sampling and Sieving of Crumb Rubber
ARIZ 719c Heating and Drying Materials in Microwave Oven
ARIZ 725a Tensile Proof Dowel Test
ARIZ 726a Reflectance, Dry Opacity, and Yellowness Index of Traffic Paint
ARIZ 727a Chloride in Hardened Concrete
ARIZ 729a Exchangeable Sodium in Topsoil
ARIZ 730 Geotextile Fabric Permittivity Measurement by the Falling Head Method
ARIZ 732 Calcium Carbonate in Topsoil (Neutralization Potential of Topsoil)
ARIZ 733a Sulfate in Soils
ARIZ 734 Determination of Portland Cement Content in Cement Treated Base Material
ARIZ 735a Testing of Thermoplastic Pavement Marking Material
ARIZ 736a Chloride in Soils
ARIZ 738 Chloride in Concrete Admixtures

****** The above Arizona Test Methods, and also commonly used AASHTO and ASTM procedures in this category are show on Series 700 Cover Sheet (December 15, 2006).

SERIES 800 DESIGN**

ARIZ 801a Evaluation of Profiles
ARIZ 802g Effect of Water on Strength of Compacted Bituminous Mixtures (Immersion Compression Test)

ARIZ 805b Centrifuge Kerosene Equivalent of Aggregate, Including K-Factor
ARIZ 806e Maximum Theoretical Specific Gravity of Laboratory Prepared Bituminous Mixtures (Rice Test)
ARIZ 807 Design of Slurry Seal
ARIZ 814a Design of Asphaltic Concrete Friction Course
ARIZ 815c Marshall Mix Design Method for Asphaltic Concrete
ARIZ 819a Design of Exposed Aggregate Seal Coats
ARIZ 822 Determination of Additive or Asphalt Blend Required for Modification of Asphalt Viscosity
ARIZ 825a Method of Test for Determining the Quantity of Asphalt Rejuvenating Agent Required for an Asphaltic Pavement
ARIZ 829a Evaluation of Pavement Smoothness
ARIZ 832 Marshall Mix Design Method for Asphaltic Concrete (Asphalt-Rubber) [AR-AC]

****** The above Arizona Test Methods are also shown on Series 800 Cover Sheet (November 14, 2008).

SERIES 900 **MATERIALS QUALITY ASSURANCE PROGRAM** (October 1, 1999)

Appendix A - ADOT System for the Evaluation of Testing Laboratories (June 22, 1999)
Appendix B - Contractor Testing Included in the Acceptance Decision
Appendix C - Sampling Guide Schedule

SERIES 1000 **CERTIFICATES** (July 15, 2005)

APPENDIX

APPENDIX A1 Rounding Procedure (July 15, 2005)
APPENDIX A2 Metric Guide (July 15, 2005)
APPENDIX A3 Equipment Calibration and Verification (July 15, 2005)

June 17, 2008
(2 Pages)

MATERIALS TESTING MANUAL

INTRODUCTION

The Materials Testing Manual has been prepared for the purpose of standardizing sampling and testing procedures in the various laboratories which test materials for conformance to Arizona Department of Transportation specifications. The procedures found in this manual fall into one of four categories.

1. Those procedures which follow an established standard. The American Association of State Highway and Transportation Officials (AASHTO) is the primary contributor. Some procedures are conducted in accordance with the American Society for Testing and Materials (ASTM). Commonly used procedures in this category are listed on the cover sheet in their respective series, but these listings are not intended to include all procedures referenced in the Arizona Department of Transportation specifications.

2. Those procedures which generally follow an established standard, but which have been modified in some degree. They have been designated as modifications in a subheading beneath the title.

3. Those procedures that are modifications of testing procedures used by other state transportation departments.

4. Those procedures which have been originated by the Arizona Department of Transportation and which may not be fully described in national publications. These have been subtitled "An Arizona Method".

Each procedure in category 1 listed above is assigned an alphanumeric designation either by AASHTO or ASTM. The year that a procedure is adopted, or the latest revision to a procedure, is identified following the procedure designation and separated by a hyphen. Procedures that have been re-approved without change are indicated by the year of re-approval in parenthesis following the procedure designation and the year of adoption or latest revision. AASHTO publishes the "*Standard Specifications for Transportation Materials and Methods of Sampling and Testing*" and the "*AASHTO Provisional Standards*" yearly. Unless otherwise specified, the effective date of AASHTO standards is the first day of the month following publication and distribution of the published standards. Additional information regarding AASHTO standards can be obtained on the AASHTO website (www.transportation.org). The "*Annual Book of ASTM Standards*" is published in separate volumes throughout the year. Additional information regarding ASTM standards can be obtained on the ASTM website (www.astm.org).

Each procedure in category 2, 3, or 4 listed above is given a number prefixed by "ARIZ". Revised test designations will have a letter suffix, for example, the first revision of test method ARIZ 201 would be ARIZ 201a, the second revision will be 201b, etc. Each procedure, or revision to it, is also identified by a date on which it becomes effective. References made to procedures in the manual which either do not include a letter suffix or have a suffix which has been superseded shall be understood to refer to the latest revision of the respective numbered procedure. The Table of Contents lists all Arizona sampling and testing procedures included in the manual, with their respective necessary letter suffixes.

The manual is divided into 10 different series, and an Appendix section, concerned with sampling and testing procedures for specific materials, design methods, or certification procedures.

It is the intent of Materials Group to describe the procedures in such detail that a competent operator who is unfamiliar with the method can obtain accurate results when the procedure is followed in detail. We will welcome any suggestions for improvement in these procedures that will assist in accomplishing this objective.

All revisions to the Materials Testing Manual shall officially originate from Materials Group, Quality Assurance Section.

Revisions will be issued under a Materials Testing Manual Change Letter. All change letters issued will be numbered consecutively, beginning with No. 1.

Change letters will be signed by the Assistant State Engineer, Materials Group.

Revisions issued under each Materials Testing Manual Change Letter will be effective for projects with a bid opening date on or after the effective date of the corresponding change letter.

Materials Group will welcome any suggestions for the improvement of the Materials Testing Manual, as it is hoped and intended that manual users will participate its formulation and revision.

July 15, 2005
(11 pages)

GLOSSARY OF TERMS

Abrasion - The wearing away of the surface of a solid by friction.

Abscissa - The distance measured in the "x" or horizontal direction on a graph.

Absorption - Process of a soil or aggregate holding a fluid mechanically, by capillary action. This applies both to water and asphalt.

Adhesion - (1) Shearing resistance between soil and another material under zero externally applied temperature.

(2) Molecular attraction exerted between the surfaces of bodies in contact.

Admixtures for Portland Cement Concrete - Materials other than water, aggregate, Portland cement, and fiber reinforcement that is used as an ingredient of Portland cement concrete to modify its freshly mixed, setting, or hardened properties and that is added to the batch before or during its mixing.

Aggregate - Any hard, inert mineral material used for mixing in graduated fragments. It includes sand, gravel, crushed stone, and blast-furnace slag.

(1) Coarse aggregate for Portland cement concrete - that retained on a No. 8 (2.36 mm) sieve.

(2) Fine aggregate for Portland cement concrete - that passing a 3/8" (9.5 mm) sieve and almost entirely passing a No. 4 (4.75 mm) sieve, and predominantly retained on a No. 200 (75μm) sieve.

Air-Entraining Agent - An admixture used in Portland cement concrete to increase the amount of entrained air in the mixture. Air is entrained in minute bubbles in the concrete or mortar during mixing.

Aliquot - A part of the whole that divides evenly into the whole, as 3 mL is an aliquot portion, 1/8 of 24 mL.

Anhydrous - A material which has an affinity for water due to the fact that the water in its crystalline structure has been removed.

Asphalt - A dark brown to black cementitious material, solid or semi-solid in consistency, in which the predominating constituents are bitumens which occur in nature as such or are obtained as residual in refining petroleum.

Asphalt Cement - Asphalt that is refined to meet specifications for paving, industrial, and special purposes.

Asphalt Emulsion Slurry Seal - A mixture of slow-setting emulsified asphalt, fine aggregate and mineral filler, with water added to produce a slurry consistency.

Asphalt Joint Fillers - Asphaltic products used for filling cracks and joints in pavement and other structures.

Asphaltic Concrete - A thoroughly controlled hot mixture of asphalt cement and well-graded aggregate, thoroughly compacted into a uniform dense mass.

Auger - A drill for test holes in unconsolidated material modeled after the conventional screw auger.

Bitumen - Hydrocarbon material of natural and/or pyrogenous origin, frequently accompanied by their non-metallic derivatives, which may be gaseous, liquid, semi solid or solid, and is completely soluble in carbon disulfide.

Bleeding - (1) Upward migration of bituminous material resulting in a film of asphalt on the surface.

(2) Escape of water from freshly placed concrete commonly observed as an accumulation on a horizontal surface.

Boulder - A rock fragment, usually rounded by weathering or abrasion, which will be retained on a 3 inch (75 mm) sieve.

Capillarity - The rise or movement of a liquid in the interstices of a soil due to capillary forces.

Chemical Change - Any change resulting in formation of a new substance.

Clay (Clay Soil) - Fine-grained soil or the fine-grained portion of a soil that can be made to exhibit plasticity within a range of water contents and that exhibits considerable strength when air-dry.

Coal Tar - Tar produced by destructive distillation of bituminous coal.

Cohesion - (1) The property of a soil that makes its particles stick together (clay is a cohesive soil).

(2) The property of a bituminous material that holds the mass together.

Colloidal - Pertaining to soil particles that are so small (less than 0.001 mm) that the surface activity has an appreciable influence on the properties of the aggregate.

Compaction - The densification of a soil by means of mechanical manipulation.

Compressibility - Property of a soil pertaining to its susceptibility to decrease in volume when subjected to load.

Consistency - (1) The relative ease with which a soil can be deformed.

(2) Relative mobility of freshly mixed concrete commonly defined as slump.

Corrugations - Regular transverse undulations on the surface of sheet metal, consisting of alternate valleys and crests.

Curing of Concrete - A period provided to prevent formation of surface cracks due to rapid loss of water while concrete is plastic, and to assure attainment of maximum strength.

Curing Compound (Liquid) - A liquid, membrance-forming material used in curing Portland cement concrete, which prevents moisture loss during the early hardening period. Papers and other impermeable sheet materials can be used for the same purpose.

Cutback (Liquid) Asphalt - Asphalt cement which has been liquified by blending with petroleum distillates. Upon exposure to atmospheric conditions the diluents evaporate, leaving the asphalt cement to perform its function.

(1) Rapid Curing (RC) - Composed of asphalt cement and a naphtha or gasoline-type diluent of high volatility.

(2) Medium Curing (MC) - Composed of asphalt cement and a kerosene-type medium volatility.

(3) Slow Curing (SC) - Composed of asphalt cement and oils of low volatility.

Deflocculant - An agent that prevents fine soil particles in suspension from coalescing to form flocs; for example the working solution employed in the Sand Equivalent test.

Density (Unit Weight) - Weight of a material per unit volume.

Disintegration - Deterioration or separation into smaller fragments from any cause.

Distillation - Process of driving off gas or vapor from liquids or solids, with heat, in a retort or still, and condensing products therefrom.

Ductility - Capability of being drawn out or hammered thin. A common test for bituminous materials, which determines, indirectly, the adhesive quality, and temperature susceptibility.

Elasticity - That property of a body which causes it to recover its original shape and size when it is deformed and the deforming forces are removed.

Emulsified Asphalt - A heterogeneous system containing two normally immiscible phases (asphalt cement and water) with a small amount of emulsifying agent. It exists in a liquid state at normal temperatures. Emulsified asphalts may be anionic, with electro-negatively charged asphalt globules; or cationic, with electropositively charged asphalt globules, depending upon the emulsifying agent.

Erosion - The loosening and transporting of rock debris and soil by moving agents operating on the earth's surface. The four main agents are: wind, waves and currents in bodies of water, glaciers, and running water.

Expansion Joint - Joint permitting pavement to expand in length.

Fabricating Plant - A plant where steel members are riveted or welded together to form steel beams, trusses, metal pipe, etc.

Fineness Modulus - An index of the fineness or coarseness of an aggregate; the summation of the cumulative percentages of the material retained on the specified series of sieves divided by 100. It is **not** an indication of grading. Sieve sizes used are No. 100 (150 μm), No. 50 (300 μm), No. 30 (600 μm), No. 16 (1.18 mm), No. 8 (2.36 mm), No. 4 (4.75 mm), 3/8 inch (9.5 mm), 3/4 inch (19.0 mm), 1-1/2 inch (37.5 mm), and larger, increasing in the ratio of 2 to 1.

Floc - Loose, open-structured mass formed in a suspension by aggregation of minute particles.

Flocculation - Process of forming flocs.

Free Water (Ground Water) - Water that is free to move through a soil mass under the influence of gravity.

Friable - Easily broken or crumbled.

Frost Action - Freezing and thawing of moisture in materials and the resultant effects on these materials and on structures of which they are a part or with which they are in contact.

Gradation - Proportion of material of each grain-size present in a given aggregate sample.

Granular - Material that does not contain more than 35 percent of soil particles which will pass a No. 200 (75 μm) sieve.

Gravel - Rounded or semi-rounded particles of rock that will pass a 3 inch (75 mm) sieve and be retained on a No. 10 (2.00 mm) sieve.

Heave - Upward movement of soil caused by expansion or displacement resulting from phenomena such as moisture absorption, removal of overburden, driving of piles, frost action, etc.

Honeycomb - A surface or interior defect in a concrete mass characterized by lack of mortar between the coarse aggregate particles.

High-Early Strength Cement - A finer ground cement with a different chemical composition that reaches a high strength in a shorter period of time than regular cement.

Hydrated Lime - A dry powder obtained by treating quicklime with water enough to satisfy its chemical affinity for water under the conditions of its hydration. It is predominantly calcium hydroxide.

Hydraulic Cement - A cement that sets and hardens by chemical interaction with water and that is capable of doing so under water.

Hydrophilic - Literally, water-loving. The property that defines a material as having an affinity (attractive force) for water.

Hydrophobic - Literally, water-averting. The property that defines a material as lacking an affinity (attractive force) for water.

Hygroscopic Water - Water retained in an air-dried soil. It is held by each soil grain in a very thin film and has both physical and chemical affinity for the grain. This moisture is in equilibrium with the air humidity.

Joint (Pavement) - A narrow space separating two slabs or sections of pavement.

Leaching - The removal of soluble salts or other soluble particles by percolating water.

Liquid Limit - (1) The moisture content which is the boundary between the liquid and plastic states for the minus No. 40 (425 μm) fraction of a soil.

(2) That moisture content at which a soil fraction will close a standard groove for a length of about 1/2 inch (13 mm) when subjected to 25 blows in a liquid limit device.

Macadam - An asphalt pavement construction using a coarse, open-graded aggregate that is usually produced by crushing and screening stone, slag or gravel.

Maximum Size of Soil and Aggregate - The smallest sieve opening through which the entire amount of material will pass.

Note: Another definition, which applies only to aggregates used in Superpave mixes (Section 417, "Asphaltic Concrete (End Product) SHRP Volumetric Mix", of the ADOT Specifications) is: Maximum Aggregate Size - One size larger than the nominal maximum aggregate size.

Mesh - The square opening of a sieve.

Modulus of Rupture - A measure of the flexural strength of concrete when it is broken by bending. The higher the values the greater the strength.

Moisture Content - (1) The proportion of moisture in soil or aggregate material, expressed as a percent of the dry weight.

(2) Optimum Moisture Content - The percentage of moisture at which the greatest density of a particular soil can be obtained through compaction by a specified method.

(3) The proportion of moisture in bituminous mixtures, expressed as a percent of the wet weight.

Nominal Maximum Size of Soil and Aggregate - The smallest sieve opening through which the entire amount of material, by specification, is permitted to pass.

Note: Another definition, which applies only to aggregates used in Superpave mixes (Section 417, "Asphaltic Concrete (End Product) SHRP Volumetric Mix", of the ADOT Specifications) is: Nominal Maximum Aggregate Size - One size larger than the first sieve that retains more than 10 percent aggregate.

Ordinate - The distance measured in the "y" or vertical direction on a graph.

Overlay - One or more courses of asphalt construction on an existing pavement, generally including a leveling course, followed by a uniform course or courses to provide needed thickness.

Penetration - The consistency of a bituminous material expressed as the distance that a standard needle vertically penetrates a sample of the material under known conditions of loading, time and temperature.

Permeability - That property of a material which permits a liquid to flow through its pores or interstices.

pH - An index of acidity or alkalinity, in terms of the logarithm of the reciprocal of the hydrogen ion concentration. A pH of seven, the value for pure distilled water, is regarded as neutral; pH values of less than seven indicate acidity; and, pH values of greater than seven indicate alkalinity.

Plasticity - The property of a soil which allows it to be deformed beyond the point of elastic recovery without cracking or appreciable volume change.

Plasticity Index (PI) - Numerical difference between the liquid limit and the plastic limit.

Plastic Limit - (1) The water content corresponding to an arbitrary limit between the plastic and semisolid states of consistency of a soil.

(2) Water content at which a soil will just begin to crumble when rolled into a thread about 1/8 inch (3 mm) in diameter.

Porosity - The ratio, in percent, of the volume of void space (pores) of a material to the total volume of its mass.

Portland Cement - A hydraulic cement made by pulverizing portland-cement clinker (a clinker, partially fused by pyroprocessing, consisting predominantly of crystalline hydraulic calcium silicates), and usually containing calcium sulfate.

Prime Coat - The first application of a bituminous material to an existing absorbent surface.

Pumping - The ejection of foundation soil wet or dry, through joints or cracks, or along edges of rigid slabs, due to vertical movements under traffic.

Quicklime - A calcined material, the major part of which is calcium oxide or calcium oxide in association with a lesser amount of magnesium oxide, capable of slaking with water.

Raveling - Progressive disintegration of a pavement surface by dislodgment of aggregate particles.

Relative Density - (1) Soils - The ratio of *(1)* the difference between the void ratio of a cohesionless soil in the loosest state and any given void ratio, to *(2)* the difference between the void ratios in the loosest and in the densest states. This definition is expressed as an equation below:

$$Dr = \frac{Emax - En}{Emax - Emin}$$

Where:
Dr = Relative density of cohesionlesss soils
Emax = Void ratio of soil in the loosest state
Emin = Void ratio of soil in the densest state
En = Any given void ratio

(2) Asphaltic Concrete – Often used for specimens prepared by means of the Superpave gyratory compactor; the ratio, expressed as a percentage, of the bulk specific gravity (at any number of gyrations) to the theoretical maximum specific gravity.

Riprap - Broken rock used for the protection of embankments, cut slopes, etc., against agents of erosion, primarily water.

Road Mix - A mixture of aggregate and asphalt prepared in place.

Rock - Natural solid mineral matter occurring in large masses or fragments.

Rutting - Formation of longitudinal depressions by the lateral displacement of soils or surfaces under traffic.

Sand - Particles of rock that will pass the No. 4 (4.75 mm) sieve and be retained on the No. 200 (75 μm) sieve.

Saturated Surface-Dry - Term used to describe the condition of an aggregate in which the pores of all the particles are completely filled with water, but their surfaces are free from moisture.

Screed - To strike off excess material to bring the top surface to proper contour and elevation.

Screen - An apparatus, in which the apertures are circular, for separating sizes of material.

Seal Coat - A thin asphaltic surface treatment used to improve the texture of and to waterproof an asphalt pavement surface.

Settlement - The reduction in elevation of short sections of pavement or structures, due to compressibility of underlying soils.

Shear Strength - The maximum resistance of a soil to shearing stresses.

Shear Stress - An action or stress, resulting from applied forces, which tends to cause two contiguous parts of a body to slide relatively to each other in a direction parallel to their plane of contact.

Sieve - An apparatus, in which the apertures are square, for separating sizes of material.

Silt - Material passing the No. 200 (75 μm) sieve that is nonplastic or very slightly plastic and that exhibits little or no strength when air-dried.

Slump - The measure of the consistency of concrete determined by placing the concrete in a standard slump cone, removing the cone, and allowing the concrete to settle under its own weight.

Soil - Sediments or other consolidated accumulations of solid particles produced by the chemical and physical disintegration of rocks, and which may or may not contain organic matter.

Soil Profile - Vertical section of a soil, showing the nature and sequence of the various layers, as developed by deposition or weathering or both.

Soundness - Resistance to both physical and chemical deterioration.

Spalling - Peeling away of a surface, particularly Portland cement concrete.

Specific Gravity (Absolute) - The ratio of the weight in air of a given volume of material at a stated temperature, to the weight in air of the volume of water which the material displaces.

Specific Gravity (Apparent) - Ratio of the weight in air of a given volume of impermeable material (that is, the solid matter including the impermeable pores) to the weight of an equal volume of water at a stated temperature.

Specific Gravity (Bulk) - Ratio of the weight of a given volume of permeable material (including permeable and impermeable voids) to the weight of an equal volume of water at a stated temperature.

Spelter - The zinc coating used for rustproofing iron or steel by galvanizing.

Stability - Property of a material which enables it to retain its other essential characteristics throughout the range of conditions expected in service.

Stone - Crushed or naturally angular particles of rock that will pass a 3 inch (75 mm) sieve and be retained on a No. 10 (2.00 mm) sieve.

Stripping - Separation of bituminous films from aggregate particles due to presence of moisture.

Swell - Increase in volume due to the absorption of water into the intergranular pore space.

Tack Coat - A very thin spraying of bituminous material on an existing surface to increase the adhesion, or bond, between a new course of construction and the old surface.

Titration - The volumetric addition of a solution, of known concentration, to another solution to determine an end point reaction.

Top Soil - Usually the upper 6 inches (150 mm) of native soil and that portion used in dressing and landscaping earth slopes.

Viscosity - The property of a fluid to resist internal flow.

Void - Space in a mass not occupied by solid mineral matter; it may be occupied by air, or other fluids.

Warping - Deviation of pavement surface from original shape caused by temperature and moisture differentials within the slab.

Yield - Ratio of the volume of a Portland cement concrete mixture produced to that which theoretically should be produced.

NOTE: Additional information on Terminology and Definitions of Terms can be found in various other sources, including the following:

AASHTO M 146: "Terms Relating to Subgrade, Soil-Aggregate, and Fill Materials".

AASHTO R 10: "Definition of Terms for Specifications and Procedures".

ASTM C 125: "Standard Terminology Relating to Concrete and Concrete Aggregates".

ASTM C 219: "Standard Terminology Relating to Hydraulic Cement".

ASTM D 8: "Standard Terminology Relating to Materials for Roads and Pavements".

ASTM D 653: "Standard Terminology Relating to Soil, Rock, and Contained Fluids".

ASTM E 456: "Standard Terminology Relating to Quality and Statistics".

November 14, 2008
(1 Page)

SERIES 100

SAMPLING

The following methods shall be performed in accordance with the respective designation:

ARIZONA TEST METHODS:

TITLE	DESIGNATION
Sampling Bituminous Materials…….	ARIZ 103a
Sampling Bituminous Mixtures…….	ARIZ 104c
Sampling Soils and Aggregates……..	ARIZ 105d
Sampling Hydrated Lime and Lime Products…….	ARIZ 108
Sampling Metallic Materials…….…….	ARIZ 109
Sampling Miscellaneous Materials…….	ARIZ 110

AASHTO TEST METHODS:

TITLE	DESIGNATION
Sampling and Testing Brick ……...	T 32
Sampling and Acceptance of Hydraulic Cement .....……..	T 127
Sampling Fresh Concrete .....…….	T 141
Reducing Samples of Aggregate to Testing Size…….	T 248

NOTE: It shall be assured that the appropriate methods as given in the project requirements are being adhered to.

NOTE: Refer to Series 900, “Materials Quality Assurance Program”, of the Materials Testing Manual for current guidelines on sampling of materials for acceptance, independent assurance, and correlation testing.

SAMPLING BITUMINOUS MATERIALS

(An Arizona Method)

SCOPE

1. (a) This procedure covers best practices for sampling of Bituminous materials (paving grade asphalt, crumb rubber asphalt and emulsions) in the field.

(b) This test method may involve hazardous material, operations, or equipment. This test method does not purport to address all of the safety concerns associated with its use. It is the responsibility of the user to consult and establish appropriate safety and health practices and determine the applicability of any regulatory limitations prior to use.

(c) For the purpose of this test method Bituminous materials other than Emulsions will be referred to as “Asphalt Binder”, and Emulsified Bituminous material i.e. (RS-1, SS-1, CSS-1, etc…) will be referred to as “Emulsions”.

SIZE OF SAMPLES

2. (a) A minimum of 1 gal. of Asphalt Binder.

(b) A minimum of two ½ gal. containers per sample of Emulsions.

CONTAINERS

3. (a) Containers for Asphalt Binder, shall be double friction top cans.

(b) Containers for Emulsion samples shall be wide mouth containers made of plastic.

PROTECTION AND PRESERVATION OF SAMPLES

4. (a) Containers shall be new and free of any moisture, contaminants, or residue from any manufacturing process. The top and container shall fit together tightly.

(b) The container shall be tightly sealed immediately after obtaining the sample.

(c) The filled sample container shall not be cleaned using a solvent. If cleaning is necessary use a clean dry cloth.

(d) Samples of Emulsion shall be protected from freezing.

(e) Transferring samples from one container to another shall be avoided if possible.

(f) Sample containers shall be identified using sample tags that are securely fastened to the side of the container so they will not be lost in transit, and shall be clearly marked for identification with a suitable permanent marker on the side of the container itself.

PROCEDURE

5. (a) Samples of Asphalt Binder shall be taken from the last possible point before the bituminous material is introduced into the hot plant. This is usually from a spigot or faucet on the circulation line.

(b) Bituminous materials applied to pavement surfaces, i.e. Tack Coat, Fog Coat shall be sampled from the distributor truck at the project.

(c) Clearly identify the side (not the lid) of a new clean container of appropriate size with the sample number, date, project number, type of material, and any other pertinent information.

(d) To ensure the sample is representative, draw off and discard a minimum of 1 gal. of Bituminous material prior to obtaining the sample from the sampling valve.

(e) From the sampling valve draw off the minimum amount of Bituminous material required for the type of material being sampled. Care should be taken to avoid spilling any material on the outside of the container or over filling the container. The container should be filled to no closer than one inch from the top.

(f) Immediately after obtaining the sample, the clearly identified container shall be tightly and positively sealed.

SAMPLING BITUMINOUS MIXTURES

(An Arizona Method)

SCOPE

1. (a) This procedure describes the methods which are to be used when sampling bituminous mixtures.

(b) Sampling bituminous mixtures by this procedure may involve hazardous material, operations, or equipment. This procedure does not purport to address all of the safety concerns associated with its use. It is the responsibility of the user to consult and establish appropriate safety and health practices and determine the applicability of any regulatory limitations prior to use.

SAMPLING PLANT-MIXED BITUMINOUS MIXTURES

2. (a) Asphaltic Concrete shall be sampled as described in paragraphs 2(d) through 2(f) below.

(b) Asphaltic Concrete Friction Course and Asphaltic Concrete Friction Course (Asphalt-Rubber) shall be sampled as described in paragraph 2(g).

(c) Asphaltic Concrete (Asphalt-Rubber) shall be sampled as described in paragraph 2(h).

(d) A 4 foot x 1 foot x 1/16 inch steel plate, which has been prepared with a 1/8 inch hole at each corner of one end and a sufficient length of wire tied through each hole to form a loop approximately 4 feet in length, shall be placed on the roadway just ahead of the laydown machine. Except for wider mats when a sample is being taken from the middle of the mat, the steel plate is placed so that the end with the wire is approximately one foot in from the right or left edge of the mat being laid. The sampling should be alternated between the right and left edges, and on wider mats also the middle when practical. The wire attached to the end of the plate shall be held to the ground to allow the laydown machine to pass over the plate and wire.

(e) After the laydown machine has passed, locate the plate by raising the wire.

(f) The sample shall be taken from the plate using a flat square point shovel. The sample shall consist of the full depth of material for one shovel width from

the center portion of the plate over its entire length. Material covering the entire plate shall not be taken. A single pass of the shovel shall be made, moving along the surface of the plate until the shovel is full. Carefully deposit the bituminous mixture into a 5-gallon bucket, or other suitable container. Material which has sluffed into the resultant trench shall not be obtained. At the next undisturbed area of material on the plate, repeat shoveling and placing the material into the container. If necessary, additional material may be obtained by using an additional plate(s) in the immediate vicinity and combining all material. The use of an additional plate(s) cannot be used in lieu of splitting.

NOTE: As an alternate to obtaining the sample from the plate using a shovel as described above, a rectangular metal template ("cookie cutter") and metal plate of sufficient size may be used to sample the bituminous mixture. The metal template and plate shall be of sufficient size so that the desired amount of material is obtained by a single use of the template and plate at any one location. The metal plate shall be prepared with a wire(s) of sufficient length attached to each corner on one side of the metal plate (the short side when the plate is not square) so the metal plate may be located by raising the wire(s) after the laydown machine has passed. The metal plate shall be placed on the roadway at the location where the sample is to be taken, just ahead of the laydown machine. If the metal template is not square, it shall be placed on the roadway so that the longest side is in a transverse direction across the roadway. The wire(s) shall be held to the ground to allow the laydown machine to pass over the plate and wire(s). After the laydown machine has passed, locate the plate by raising the wire(s). The template is pressed through the bituminous mixture until it rests squarely upon the plate. The entire amount of bituminous mixture is removed from the interior of the template and carefully placed into a 5-gallon bucket, or other suitable container. Obtaining multiple samples cannot be used in lieu of splitting.

(g) When sampling Asphaltic Concrete Friction Course or Asphaltic Concrete Friction Course (Asphalt-Rubber), an adequate amount of material shall be taken from the truck at the mixing plant and placed into a 5-gallon bucket, or other suitable container. The sample shall be taken from at least 3 random locations, approximately 12" below the surface, within five minutes from the time the loading of the truck is completed.

(h) Representative samples of Asphaltic Concrete (Asphalt-Rubber) may be obtained either from the truck at the mixing plant, the windrow as shown in Figure 1, or in accordance with paragraphs 2(d) through 2(f). The samples shall be placed into a 5-gallon bucket, or other suitable container.

(i) Material that is to be tested immediately after it has been sampled shall be protected to avoid heat loss while it is being transported to the laboratory.

SAMPLING FINISHED BITUMINOUS PAVEMENT

3. Samples of finished bituminous pavement shall be taken as follows.

(a) Samples of bituminous mixture from finished pavement shall be taken through the complete thickness of the pavement or lift, in such a manner which causes minimum disturbance to the sample.

(b) If coring apparatus is used, the coring bit shall be subjected to enough vertical pressure to penetrate the pavement without causing damage to equipment or disturbance of the sample.

(c) If coring equipment is not available, the sample may be taken with the use of a saw, pick, jackhammer, or other suitable means if a suitable specimen can be obtained for the intended testing.

(d) All samples shall be contained in their briquette form, transported on a relatively flat surface, and adequately protected to preserve shape and prevent fracture.

(e) The use of ice may be found helpful in obtaining and/or preserving the condition of the specimen.

SAMPLING ROAD-MIXED BITUMINOUS MIXTURES

4. Road-mixed bituminous mixture samples shall be taken from the windrow after mixing is completed and prior to laydown. Figure 1 illustrates the method used to sample road-mixed bituminous mixtures from a windrow. At each point in the windrow where a sample is to be taken, remove sufficient material from the top of the windrow so that a representative sample can be obtained from the center of the freshly exposed top of the windrow using a square point shovel. The sample taken at each sampling location shall be one shovelful of material. Repeat the sampling as necessary, at the required number of locations in the windrow, to obtain the desired amount of material. The samples taken shall be combined and placed in a container of sufficient size and shall be sealed air-tight.

SAMPLING MISCELLANEOUS PLACEMENT OF BITUMINOUS MIXTURES

5. The sampling of bituminous mixture used in paving slopes, median islands and other miscellaneous placement shall be accomplished by taking an adequate amount of material from the hauling vehicle by random shovelfuls.

SAMPLE IDENTIFICATION

6. (a) Each sample shall be identified by an accompanying sample ticket. Sample tickets shall be filled out as required to provide necessary information. The remarks area of the sample ticket should be used as necessary to provide additional information.

(b) The source of the sample shall be the "original source" of the material, as indicated on the sample ticket.

(c) An example of a completed sample ticket used by ADOT for construction projects is given below.

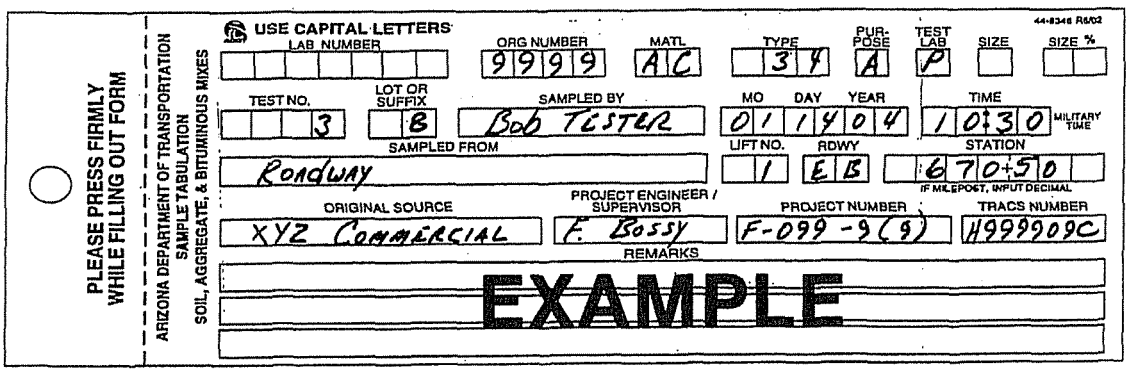

(d) The sample ticket consists of three copies. The center copy is kept by the person submitting the sample, the original copy is included inside the sample container, and the third copy is attached to the sample container. When filling out sample tickets, make certain information is clear and easily read on all three copies.

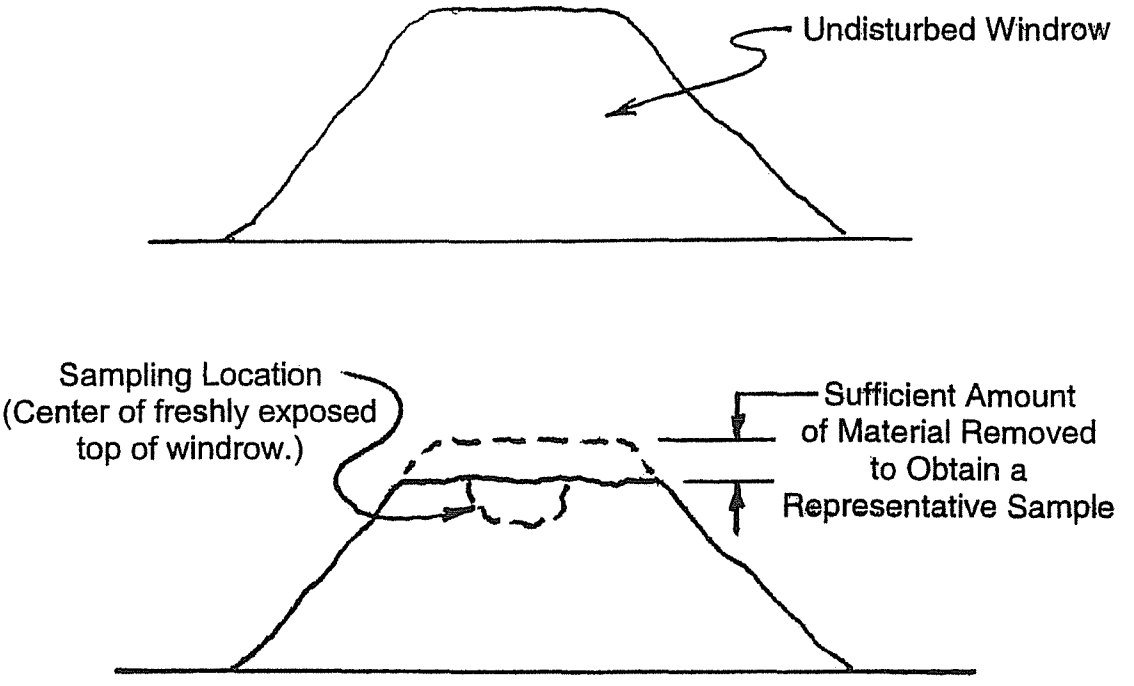

Illustration of Sampling Bituminous Mixtures from a Windrow

FIGURE 1

SAMPLING SOILS AND AGGREGATES

(An Arizona Method)

SCOPE

1. (a) This method describes the methods which are to be used when sampling soils and aggregates .

(b) Sampling is equally as important as the testing, and the individual doing the sampling shall use every precaution to obtain samples that will be representative of the materials being sampled.

(c) This test method may involve hazardous material, operations, or equipment. This test method does not purport to address all of the safety concerns associated with its use. It is the responsibility of the user to consult and establish appropriate safety and health practices and determine the applicability of any regulatory limitations prior to use.

(d) Table 1 shall be used to determine minimum sample weights based on the size of aggregate. The amount of material required may be greater depending on the tests that are to be performed on the material.

Table 1
Minimum sample sizes

Maximum Nominal Aggregate Size	Sample Mass, kg	lbs
Fine Aggregate		
#8	10	22
#4	10	22
Coarse Aggregate		
3/8”	10	22
1/2”	15	33
3/4”	25	55
1”	50	110
1-1/2”	75	165
2”	100	220
2-1/2”	125	331
3”	150	331

SAMPLING FROM STOCKPILES

2. In sampling materials from stockpiles it is difficult to ensure unbiased samples, due to the segregation which often occurs when the material is stockpiled with coarser particles rolling to the outside base of the pile. If power equipment is available then it would be advantageous to enlist the use of that equipment to develop a separate, small sampling pile composed of materials drawn from various levels and locations in the main stockpile. Once a small sampling pile has been established then a sample shall be taken from that pile by taking several increments and combining.

The stockpile may also be sampled by placing a wood or metal shield upslope from the point of sampling to prevent loose aggregate from sliding down into the sampling area. Remove approximately 3 to 6 inches of material from the sampling area. Utilizing a square point shovel, take a sample near the top, at the middle and near the bottom of the stockpile. The sample taken at each location shall be one shovelful of material. Repeat this operation at the sampling locations as shown in Figure 1, and combine all samples taken from the stockpile.

SAMPLING FROM BINS

3. A sample shall be taken by passing a sampling device through the entire cross-section of the flow of material as it is being discharged (see Figures 2 and 3). Sufficient material shall be allowed to pass at the beginning of discharge to ensure uniformity of material before the sample is taken. Repeat sampling procedure as necessary until the desired amount of material from each bin is obtained. Material from each bin shall be properly identified.

SAMPLING FROM A CONVEYOR BELT

4. Sampling from a conveyor belt may be performed either while the conveyor belt is running (by using a sampling device which diverts or intercepts the flow of material) or by taking a sample while the conveyor belt is stopped. The stopped belt method is also used when approving a sampling device used for sampling while the belt is running.

(a) If the sample is obtained while the conveyor belt is running, samples of the aggregate shall be taken utilizing a sampling device to divert or intercept the entire flow of material in such a manner that all portions of the flow are diverted or intercepted for an equal amount of time.

(b) Samples may be obtained by stopping the conveyor belt and sampling the full width of the belt utilizing a template which is shaped to the same contour of the belt. All material which is within the template area shall be removed, utilizing a brush to obtain all the fine aggregate material.

SAMPLING FROM A WINDROW

5. Figure 4 illustrates the method used to sample a windrow. At each point in the windrow where a sample is to be taken, remove sufficient material from the top of the windrow so that a representative sample can be obtained from the center of the freshly exposed top of the windrow using a square point shovel. The sample taken at each sampling location shall be one shovelful of material. Repeat the sampling as necessary, at the required number of locations in the windrow, to obtain the desired amount of material. The samples taken shall be combined.

SAMPLING FROM THE ROADWAY

6. In the case of sampling material in-place from the roadway, at least 3 samples shall be taken with a shovel at equally distributed locations across the width of the roadway. It may be necessary to use a hammer and chisel or similar tools to cut the hole in the compacted roadway. Care shall be taken to obtain all material from the hole which is dug. The samples taken shall be combined.

REDUCING FIELD SAMPLES TO TESTING SIZE

7. The reduction of samples to obtain the amount required for particular tests shall be performed in accordance with AASHTO T 248.

SAMPLE IDENTIFICATION

8. (a) Each sample shall be identified by an accompanying ticket. Sample tickets shall be filled out as required to provide necessary information. The remarks area of the sample ticket should be used as necessary to provide additional information.

(b) The source of the sample shall be the “original source” of the material, as indicated on the sample ticket.

(c) An example of a completed sample ticket used by ADOT for construction projects is given below.

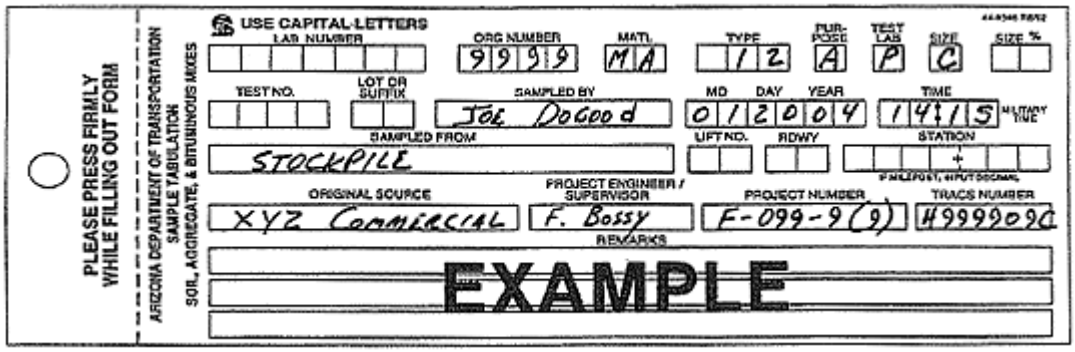

(d) The sample ticket consists of three copies. The center copy in kept by the person submitting the sample, the original copy is included inside the sample container, and the third copy is attached to the sample container. When filling out sample tickets, make certain information as clear and easily read on all three copies.

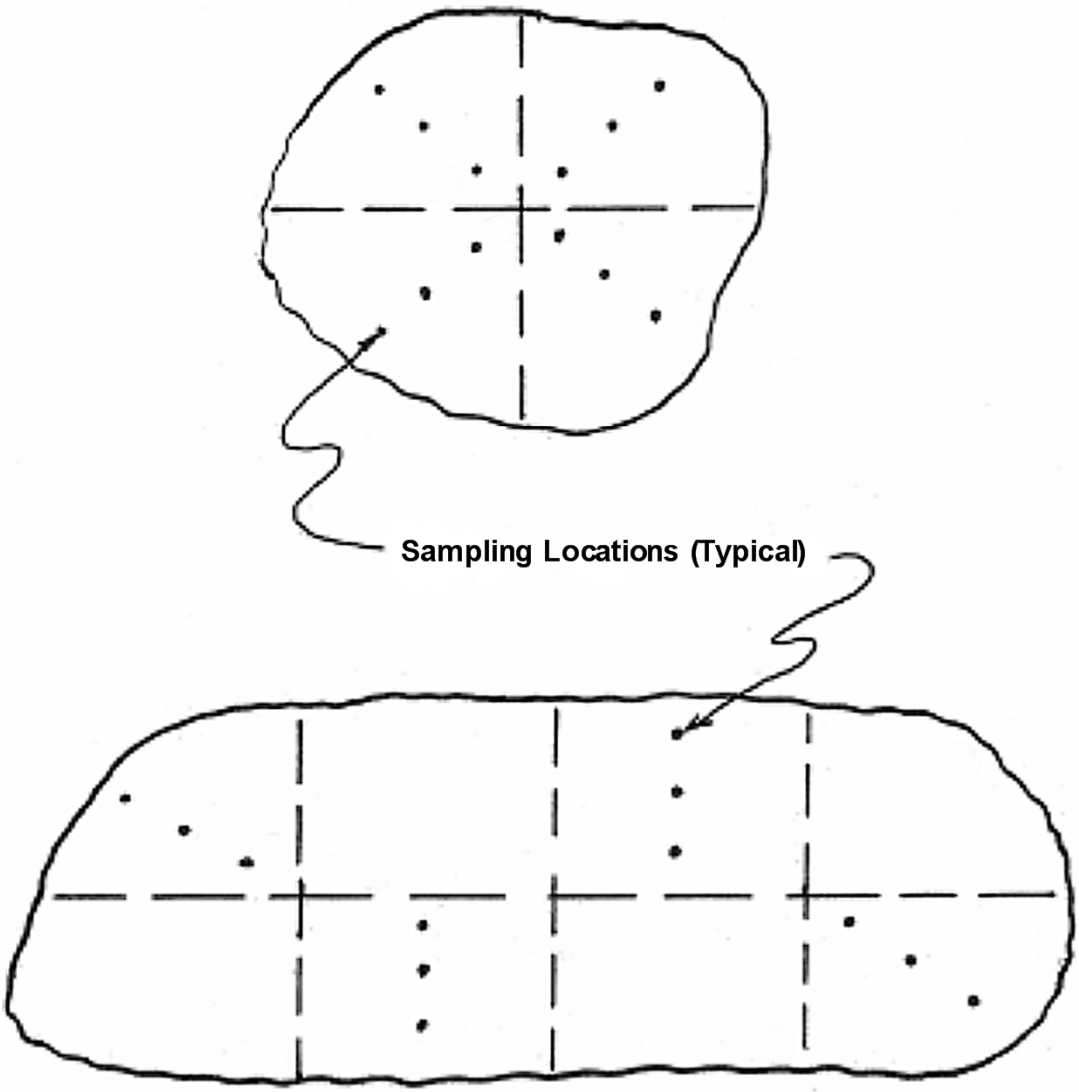

Illustration of Sampling Locations for Different Stockpile Types

FIGURE 1

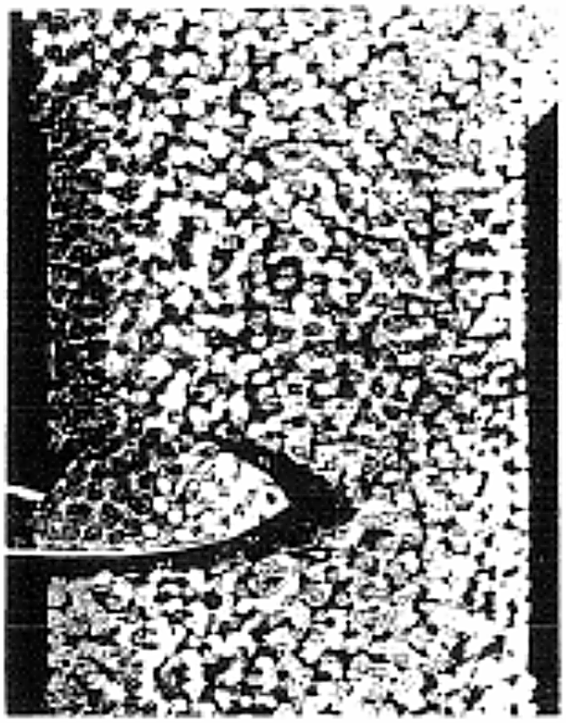

WRONG

When aggregate is passed over a screen, the fines tend to drop through immediately and accumulate on one side of the hopper. A sample taken with a shovel or other small container will not be representative.

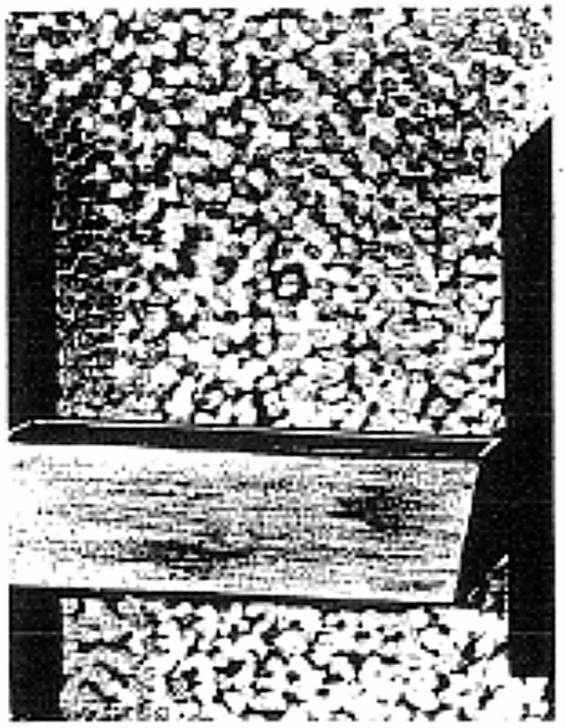

RIGHT

A sample taken by inserting the sampling device through the full flow of material will yield a representative sample. The restricted opening prevents the sampling device from filling all at once.

Illustration of Bin Sampling

FIGURE 2

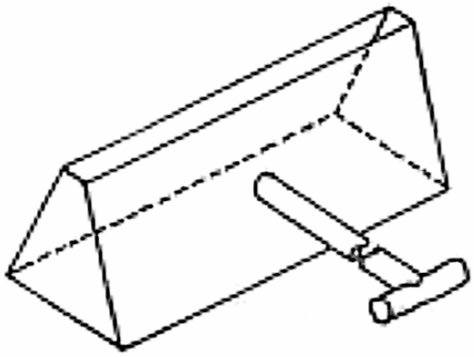

Typical Bin Sampler

FIGURE 3

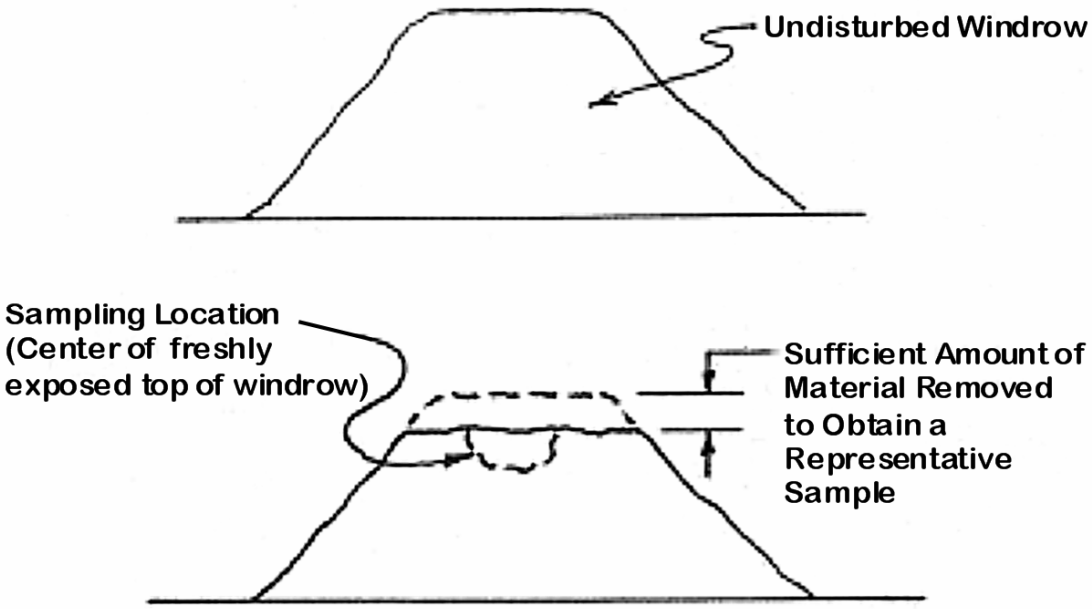

Illustration of Sampling From a Windrow

FIGURE 4

SAMPLING HYDRATED LIME & LIME PRODUCTS

Scope

1. These methods are intended to outline procedures for sampling of hydrated lime and lime products in powdered form. In instances where a specific case is not covered, ASTM Designation C-50 shall be referred to.

Sampling

2. (a) Sampling from Bulk Shipment at Point of Discharge to Storage. – As the material is being dropped from the truck or car into the silo entrance at ground level, take samples with a scoop or small shovel along the side of the discharge pipe. Take enough increments of material to completely fill a one-gallon can or an equivalent container which will hold at least 5 pounds.

(b) In sampling material that is placed in silos by air pressure through a system of pipes, open the bleed-valve, which is at ground level, and divert the flow of material into a one-gallon can or other suitable container. After the can has been filled, or a 5-pound sample has been discharged, close the bleed-valve.

(c) In all Other Cases Not Covered. – If the above methods are not applicable, material shall be taken from the most convenient location, provided the sample obtained will be representative of the total quantity. Increments shall be taken with a scoop or small shovel, and from at least 3 random locations within the bulk.

Quantity Required

3. All samples shall be collected in quantity enough to fill a ½-gallon, air-tight metal container. This is equivalent to aproximately 5 pounds. For quicklime, the containers shall be made of glass.

Identification

4. (a) Each sample container shall have legibly marked thereon the name of the product, the name of the manufacturer, place of manufacture, and the brand name, if any.

(b) The sample card shall have the following information:

(1) Name of person sampling

(2) Name and designation of project

(3) Quantity represented

(4) Date sampled

(5) Manufacturer's name, address

SAMPLING METALLIC MATERIALS

Scope

1. These methods are intended for use in sampling the respective metallic materials named.

Sampling Bronze Bearing Plates

2. Samples shall be not less than 6 inches in length and 1½ inch in diameter, cast as an integral part of the plate. At least one sample shall be taken, at the point of manufacture, for each melt.

Sampling Castings

3. (a) Cast Iron Castings. – Two samples, not less than 1.20 inch in diameter and 21 inches in length, shall be cast from each melt. These samples are ordinarily obtained at the time of manufacture. All castings as received shall be sounded by means of a hammer to detect possible flaws.

(b) Steel Castings. – Two samples not less than 1¼ inch in diameter and 10 inches in length shall be obtained from each melt at the time of manufacture. All castings as received shall be sounded with a hammer to detect possible flaws.

Sampling Fence Stays (Metal)

4. One random sample shall be cut that is representative of 10 bundles.

Sampling Galvanized Sheet Metal

5. One sample at least 6 inches x 6 inches shall be cut in such a manner as not to disturb or damage the coating. The area in which it is taken shall not be damaged.

Sampling Metal Pipe Products

6. (a) Bituminous Coated Corrugated Metal Pipe

(1) Field Inspection. – Whenever the pipe is shipped from a source outside the Phoenix area, one sample at least 6 inches x 6 inches shall be taken and submitted for testing.

(2) Central Laboratory Inspection. – One sample shall be obtained from each supplier each time a dipping tank is replenished, but no less than one sample per year shall be taken.

(3) Samples shall be taken in an area where the coating has not been disturbed, and in such a manner as not to disturb the coating.

(b) Other Corrugated Metal Pipe

(1) Field Inspection. – Field inspection shall be made before the pipe is installed. This shall consist of the examination of the pipe to determine that the workmanship and fabrication are in accordance with specifications and that the pipe and galvanized coating have not been damaged.

(2) Central Laboratory Inspection. – The central laboratory shall obtain and test one sample of each size pipe at least once a year. The samples shall be sent by each supplier. Sample size shall be at least 6 inches x 6 inches.

(c) Cast Iron Pipe

(1) One piece approximately 16 inches long shall be taken from each size pipe. It shall be taken at least 6 inches from the end of a section.

Sampling Metal Posts

7. Both steel guide posts and fence posts shall be represented by one post selected at random from each project.

Sampling Reinforcing Steel

8. (a) Specifications of the State Highway Department call for one sample at least 4 feet long, selected at random from each shipment.

Sampling Steel Strands, Wire, Anchorages

9. (a) Steel strand is composed of seven wires having a center wire enclosed tightly by 6 helically-wrapped outer wires, forming a single strand for pre-tensioning in prestressed concrete. Samples shall be cut directly from the reel. Discard the first 4 feet, and obtain one sample at least 4 feet long.

(b) Steel wire is uncoated stress-relieved wire used for post-tensioning of prestressed concrete. The manner of obtaining samples shall be identical to 11(a).

(c) Anchorages are wedge-type devices used to anchor post-tensioning wire assemblies. Samples shall be selected at random from a shipment.

Sampling Structural Steel

10. All required sampling of structural steel is performed by the Bridge Division.

Sampling Wire

11. (a) Barbed Wire. – Samples of barbed wire shall be taken directly from the spool. The first 3 feet of wire from the spool shall be discarded and one sample at least 3 feet long shall be obtained. The spool of wire shall be selected at random.

(b) Wire Mesh. – Wire mesh samples shall be selected at random. Each sample shall have dimensions of at least 2 feet x 2 feet.

SAMPLING MISCELLANEOUS MATERIALS

Scope

1. These methods are intended as procedures for sampling those items not found in the preceding sections of sampling.

Sampling Brick

2. For the purpose of tests, full size brick shall be selected. Specimens shall be representative of the whole lot of brick from they are selected and shall include specimens representative of the complete range of colors and sizes of the brick in the shipment. If the brick shows variation in hardness or appearance, each type shall be selected in proportion to the quantity of each type in the lot.

Sampling Clay Pipe

3. One full-sized specimen or joint shall be selected at random from every 100 pipes, or fraction thereof, of each size.

Sampling Fence Stays (Wood)

4. These shall be inspected in the field and 1 copy of a written report stating that they comply with specifications shall be submitted to the Materials Division.

Sampling Glass Beads for Paints

5. When glass beads are furnished in cans or other types of individual containers, one container shall be selected at random, and a 5-pound sample shall be selected by the quartering or riffling methods used for sampling aggregate (ARIZ 105).

Sampling Paints and Solvents

6. (a) Aluminum pigment and vehicle for aluminum paint are shipped unmixed and, therefore, shall be sampled separately.

(b) A single package out of each batch shall be taken at random as a representative of the whole. In case the material is packaged in large containers, such as barrels or tanks, a number of small samples of not more than one quart shall be taken from the top, bottom, and intermediate points by means of a sampling tube. These small samples shall then be mixed to form a composite sample of not less than one quart. This sample shall be transferred to a clean glass or tin container and securely sealed.

Sampling Liquid Membrane Curing Compound

7. The compound to be sampled shall be shaken or stirred thoroughly in the container prior to sampling until both pigment and vehicle are blended to the extent that a representative sample can be obtained. The sample shall be placed in a ½-gallon container and sealed airtight.

Sampling Paper

8. A representative sample approximately 1 foot by 2 feet shall be cut from the roll or sheet. This sampling shall apply to Asbestos, White Top, Insulating, and Roofing Paper.

Sampling Treated Wood Pilings & Timbers

9. These materials will usually be inspected and sampled at the treating plant, in which case no sampling is required. If this is not the case, a piece 18 inches to 24 inches long shall be cut from one end of a piling or timber. If no laboratory reports have been received, it is advisable to determine from the Materials Division if sampling is necessary.

Sampling Wood Fence Posts

10. This includes guide, guard, and line fence posts. These shall be inspected in the field and reports sent to the Materials Division. Samples representative of any doubtful posts shall be submitted to the central laboratory for testing.

Sampling Reflector Buttons

11. One sample of 10 reflector buttons shall be selected at random from each lot.

Sampling Water for Concrete

12. (a) No sample of water is necessary if the water is potable and comes from a proven source; however, a memo to this effect must be submitted to the Materials Division.

(b) If possible, the sample shall be taken from a faucet connected to the pipeline used for the specified project, and water shall be pumped. Allow water to run at a high enough rate to discharge any sediment or other impurities from the pipe. Place a clean, 1-gallon jar beneath the running water and fill the jar completely.

Sampling Liquid Admixtures for Concrete

13. (a) Liquid material shall be submitted in a ½-pint clean glass container. They shall be agitated thoroughly immediately prior to taking the sample. The liquid shall be drawn from one barrel selected at random out of the lot. The sample should be drawn from a depth sufficient enough to get proportionate quantities of components.

(b) The trade name of the agent must be noted on the sample card.

Sampling Creosote, Creosote-Coal Tar, and Creosote-Fuel Oil Solutions

14. (a) Because some of the creosote may crystallize below a temperature of 120° F, the creosote shall be heated to a temperature above 120° F before sampling. Because of separation of the lighter-weight water, the creosote must be thoroughly agitated, and three samples must be taken at different levels and combined to form a composite.

(b) At least ½ gallon of material shall be taken and sealed in an airtight container.

Sampling Preformed Expansion Joint Filler

15. Each sample shall be at least 6 inches by 18 inches, and enough samples shall be taken to represent each thickness in the lot. Samples shall be packed for transportation in such a manner that there will be no danger of distortion or breakage. No tests shall be made on samples deformed or broken in handling.

Sampling Concrete Pipe, Reinforced and Plain

16. The project for which the pipe is to be used shall be notified of the dates when the pipe has been approved, or the pipe may be stenciled "Inspected – AHD". If neither of these has been accomplished, this division shall be notified immediately, and the pipe in question shall not be used until so approved.

November 14, 2008
(4 Pages)

SERIES 200

SOILS AND AGGREGATES

The following test methods shall be performed in accordance with the respective designation:

ARIZONA TEST METHODS:

TITLE	DESIGNATION
Sieving of Coarse and Fine Graded Soils and Aggregates…….…..	ARIZ 201c
Composite Grading……	ARIZ 205c
Specific Gravity and Absorption of Coarse Aggregate…….	ARIZ 210b
Specific Gravity and Absorption of Fine Aggregate……..	ARIZ 211d
Percentage of Fractured Coarse Aggregate Particles…….	ARIZ 212e
Determination of Cement Content Required for Cement Treated Mixtures…….	ARIZ 220
Moisture-Density Relations of Cement Treated Mixtures…….	ARIZ 221
Rock Correction Procedure for Maximum Density Determination of Cement Treated Mixtures…….	ARIZ 222b
Field Density of Cement Treated Mixtures by Sand Cone Method or by Rubber Balloon Method…..	ARIZ 223
Maximum Dry Density and Optimum Moisture of Soils by Proctor Method A…….	ARIZ 225a
Maximum Density and Optimum Moisture of Soils – Methods C and D…….	ARIZ 226
Rock Correction Procedure for Maximum Dry Density and Optimum Moisture Content Determination…….	ARIZ 227c

ARIZONA TEST METHODS: (continued)

TITLE	DESIGNATION
Calibration of Standard Sand and Sand Cone…….	ARIZ 229a
Field Density by the Sand Cone Method……..	ARIZ 230a
Moisture-Density Relationship Using Typical Moisture-Density Curves (One Point Proctor) Method A……..	ARIZ 232b
Flakiness Index of Coarse Aggregate……...	ARIZ 233c
Density and Moisture Content of Soil and Soil-Aggregate Mixtures by the Nuclear Method……	ARIZ 235
Determining pH and Minimum Resistivity of Soils and Aggregates……...	ARIZ 236b
Determining pH and Soluble Salts of Soils…….……	ARIZ 237b
Percent Carbonates in Aggregate……....	ARIZ 238a
Sieve Analysis and Separation of Salvaged AC Pavement Particles for Recycled Asphaltic Concrete…….	ARIZ 240a
Compressive Strength of Molded Cement Treated Base or Soil-Cement Specimens……..	ARIZ 241a
Sand Equivalent Test for Mineral Aggregate for Asphaltic Concrete Friction Course…….	ARIZ 242a
Artificial Grading of Mineral Aggregate……..	ARIZ 244
Maximum Dry Density and Optimum Moisture of Soils by Proctor Alternate Method D…….	ARIZ 245
Moisture-Density Relationship using Typical Moisture-Density Curves (One Point Proctor) Alternate Method D…….	ARIZ 246a
Particle Shape and Texture of Fine Aggregate Using Uncompacted Void Content…….……...	ARIZ 247

ARIZONA TEST METHODS: (continued)

TITLE	DESIGNATION
Alternate Procedures for Sieving of Coarse and Fine Graded Soils and Aggregates…….	ARIZ 248
Remolded Ring Samples for Direct Shear, Swell, and Consolidation……	ARIZ 249
Combined Coarse and Fine Aggregate Specific Gravity and Absorption…….….	ARIZ 251

AASHTO TEST METHODS:

TITLE	DESIGNATION
Unit Weight and Voids in Aggregate	T 19
Dry Preparation of Disturbed Soil and Soil Aggregate Samples for Test	T 87
Determining the Liquid Limit of Soils	T 89
Determining the Plastic Limit and Plasticity Index of Soils	T 90
Resistance to Abrasion of Small Size Coarse Aggregate by use of the Los Angeles Machine …….. .	T 96
Soundness of Aggregate by Use of Sodium Sulfate or Magnesium Sulfate	T 104
Wetting-and-Drying Test of Compacted Soil-Cement Mixtures	T 135
Freezing-and-Thawing Tests of Compacted Soil-Cement Mixtures	T 136
Plastic Fines in Graded Aggregates and Soils by Use of the Sand Equivalent Test……..	T 176

AASHTO TEST METHODS: (continued)

TITLE	DESIGNATION
Resistance R-Value and Expansion Pressure of Compacted Soils	T 190
Determination of Moisture in Soils by Means of a Calcium Carbide Gas Pressure Moisture Tester	T 217
Determination of Strength of Soil-Lime Mixtures	T 220
Reducing Field Samples of Aggregates to Testing Size	T 248
Total Moisture Content of Aggregate by Drying	T 255
Laboratory Determination of Moisture Content of Soils	T 265

NOTE: It shall be assured that the appropriate test methods as given in the project requirements are being adhered to.

SIEVING OF COARSE AND FINE GRADED SOILS AND AGGREGATES

(An Arizona Method)

SCOPE

1. (a) This procedure describes the method for sieving and determining the sieve analysis of fine and coarse graded soils and aggregates, including the determination of minus No. 200 material by elutriation.

(b) The procedure for sample preparation, sieving, and calculating the sieve analysis which is given in Sections 3 through 10 applies in general for all sieving operations. Section 11 gives a brief outline of the procedure for performing the sieve analysis when the sample is dried to constant weight prior to sieving. Section 12 gives an outline and description of the procedure for performing the sieve analysis when the sample is not dried to constant weight prior to sieving. Additional methods are given in Arizona Test Method 248, "Alternate Procedures for Sieving of Coarse and Fine Graded Soils and Aggregates".

(c) A washed gradation, utilizing an appropriate alternate procedure as described in either Alternate #1, 3, 4, or 5 of ARIZ 248, is to be used for all soil and aggregate materials with specification requirements for gradation. The washing requirement may be waived if the Engineer determines that it is unnecessary. However, in cases of dispute, the referee method shall be a washed gradation. Composited samples of mineral aggregate for bituminous mix designs shall be tested in accordance with either Alternate #3, 4, or 5 of ARIZ 248. If desired, the washed gradation of samples from individual stockpiles or bins may be determined and used in calculating the composite gradation.

(d) This test method may involve hazardous materials, operations, or equipment. This test method does not purport to address all of the safety problems associated with its use. It is the responsibility of whomever uses this test method to consult and establish appropriate safety and health practices and determine the applicability of regulatory limitations prior to use.

APPARATUS

2. The apparatus shall consist of the following:

(a) Sieves of sizes as required for screening, conforming to the requirements of AASHTO M 92.

(b) Any mechanical shaker may be used which produces the required thoroughness of sieving, as specified in paragraph 4(d).

(c) Balances or scales - Conforming to the requirements of AASHTO M 231, except when determining weights of 5000 grams or less, the readability and sensitivity shall be at least one gram; and when determining weights of greater than 5000 grams, the readability and sensitivity shall be at least 20 grams.

(d) Sample splitters - Shall conform to the requirements of, and be used in accordance with the procedures given in, AASHTO T 248.

(e) Heating/Drying Device - An oven or suitable heating device which is capable of drying samples without aggregate breakage or loss of material due to splattering. A micro-wave oven may be used to dry materials, provided proper attention is given to the use of apparatus and the intensity of heat generated.

(f) Brass wire brush for cleaning fine sieves coarser than No. 100, and a soft bristle brush for sieves No. 100 and No. 200.

(g) A suitable mechanical washing device with No. 200 mesh wire (Similar to Figure 1) for performing washing of fine soils and aggregates as described in Section 6, equipped with a metal tube(s) connected to a water and an air outlet; or a vessel of sufficient capacity and a nest of No. 16 and No. 200 sieves for use with the hand washing method. When utilizing mechanical washing equipment, the provision for air may be eliminated if the water pressure provides adequate agitation to wash sample as specified in Section 6.

(h) Miscellaneous pans, scoops, spatulas, brushes, pulverizing equipment, etc. for preparing, washing, and drying samples.

SAMPLE PREPARATION

3. (a) A representative sample of the amount indicated in paragraph (b) below shall be obtained. Dry the sample sufficiently to permit separation of particles on the No. 4 and larger sieves, and to develop a free-flowing condition in the portion passing the No. 4 sieve. The use of sunlight, ovens, fans, or warm air are the most common drying methods. Turn the sample frequently to prevent formation of hard clay lumps. If the sample contains hard clods or coated coarse aggregate particles, break up the clods by means which will not reduce the size of any rock. (The use of a rubber

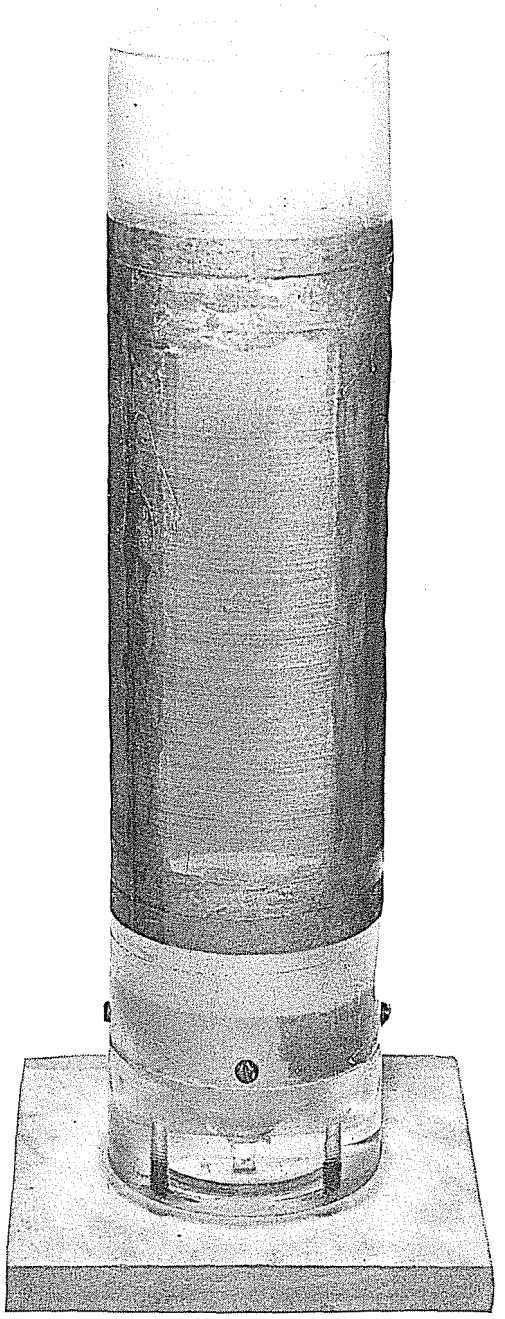

FIGURE 1

covered mallet or the raking of the material over an old screen have been found to be satisfactory methods.) When subsequent testing is to be performed on the material, it shall be assured that any temperature restrictions, as given in the appropriate test method(s), are not exceeded. A number of soil and aggregate tests, such as plasticity index, proctor maximum density, and sand equivalent, require that samples not be heated in excess of 140° F.

(b) If necessary, samples shall be reduced in size in accordance with the splitting or quartering methods in AASHTO T 248 to obtain the appropriate sample size as shown below.

Nominal Maximum Size of Particle*	Minimum Weight of Sample, grams (lbs.)
3/8"	1000 (2.2)
1/2"	2000 (4.4)
3/4"	5000 (11)
1"	10000 (22)
1-1/2"	15000 (33)
2"	20000 (44)
2-1/2"	25000 (55)
3"	30000 (66)
3" Slot	35000 (77)

* The smallest sieve opening through which the entire amount of material, by specification, is permitted to pass.

(c) If desired, the sample may be dried to constant weight. The sample may be considered to be at constant weight when, after an initial drying period of at least one hour, further drying causes less than 0.1% additional loss in weight within a five minute drying period. If desired, the material may be dried to constant weight utilizing a microwave oven in accordance with paragraph 2(e).

(d) Allow the sample to cool, if necessary, and record the weight of the material.

COARSE SIEVING

4. Normally the coarse sieving of material is performed utilizing the No. 4 sieve as the smallest sieve.

(a) When material being screened contains a large amount of passing No. 4 material, such that there may be overloading in the bottom pan during shaking operations, the sample shall be initially sieved over a No. 4 sieve to separate excess amounts of this material. This passing No. 4 material is saved and combined with the remaining portion of passing No. 4 material from subsequent coarse sieving. When material contains large rocks that are not to be sieved in the nest of coarse sieves during the actual shaking operation, the sample shall be pre-sieved to separate these particles. Unless all material will pass the largest sieve in the nested sieves, the material shall be pre-sieved over a sieve of the next larger size than that of the largest sieve size being utilized in the nested sieves. Large rocks separated in this manner are individually tested for passing the appropriate sieve, determining and recording the weight of any rock retained on these sieves.

(b) Empty the sample into the nest of sieves that is to be used for screening material. If pre-sieving has not been performed, remove any particles which may be retained on the top sieve and test these for passing the appropriate sieve, determining and recording the weight of any rock retained on these sieves.

(c) The material shall be subjected to sieving by hand or in a mechanical sieve shaker. The sieving action shall cause the particles to bounce and turn so as to present different orientations to the sieving surface. No particles shall be hand manipulated for passing any of the nested sieves. The sieving shall be of sufficient time to assure that the criteria for "thoroughness of sieving" described in paragraph (d) below is achieved.

(d) The criteria for "thoroughness of sieving" is that after completion of sieving, not more than 0.5 percent by weight of the total sample passes any sieve during one minute of continuous hand sieving in an 8 inch or 12 inch sieve as appropriate. If the thoroughness of sieving is being determined for sieves larger than 12 inches, the material retained on the respective sieve, or portions of that material shall be placed in a 12 inch sieve of the same sieve size opening, so as to not overload the sieve. Hold the individual sieve, provided with a snug fitting pan and cover, in a slightly inclined position in one hand. Strike the side of the sieve sharply and with an upward motion against the heel of the other hand at the rate of about 150 times per minute, turn the sieve about one-sixth of a revolution at intervals of about 25 strokes. A frequent check should be performed to assure that the thoroughness of sieving specified is being maintained in sieving operations.

(e) Overloading of sieves shall be avoided. The quantity of material on a given sieve at the completion of sieving shall not exceed the amount shown in the table below. As the weight retained on each individual sieve size is determined, it should be compared with the corresponding overloading criteria prior to combining the weighed

material. If overloading occurs, proper corrective action to regulate the amount of material on a sieve shall be taken. This may be accomplished by splitting the material which is retained on the overloaded sieve, resieving each portion, and combining weights.

Sieve Size	Maximum Weight Allowed (grams/ sq. in.)	Maximum Weight Allowed (grams)	
		12" Dia. Sieve	14-3/4" x 22-3/4" Sieve
3"	*	*	*
2-1/2"	*	*	*
2	*	*	*
1-1/2"	25	2827	8389
1"	18	2036	6040
3/4"	14	1583	4698
1/2"	10	1131	3356
3/8"	8	905	2685
1/4"	6	679	2013
#4	5	565	1678

* Normally particles of material retained on these sieves are tested individually, so no maximum weight allowed is specified.

(f) Starting with the largest of the nested sieves, the material retained on each sieve and in the bottom pan is weighed and recorded.

(g) Do not discard any of the sieved material until the sum of the individual weights is compared to the weight of sample prior to sieving. If the difference between the two weights is less than or equal to 1.0% of the weight of sample prior to sieving, an adjustment in weight shall be made on the sieve which has the largest weight retained, except no adjustments shall be made on the minus No. 4 material. If the difference is greater than 1.0%, the sample shall be recombined, resieved, and carefully reweighed.

SAMPLE FOR ELUTRIATION AND FINE SIEVING

5. (a) A representative minimum 500 gram sample of the passing No. 4 material from the coarse sieving shall be obtained by the use of a splitter in accordance with AASHTO T 248. The selection of an exact predetermined weight shall not be

attempted. The sample size may be reduced if the minimum of 500 grams is not obtained from coarse sieving, or if there is insufficient material for performing other desired tests utilizing the pass No. 4 material. When utilizing the mechanical washing device, the requirement for a minimum 500 gram sample may be reduced to a minimum of 200 grams for materials that tend to clog the No. 200 sieve (for example, fine soils such as blow sand, silty soils, or clay).

(b) The weight of the sample for elutriation and fine sieving is recorded to the nearest gram as "Dry Wt. Pass #4 Split".

(c) Subject the sample to elutriation by either mechanical washing (Section 6) or hand washing (Section 7).

MECHANICAL WASHING

6. This method is generally utilized for passing No. 4 material, although it may also be used with the alternate procedure described in Section 2 of Arizona Test Method 248 for testing materials containing small amounts of Plus No. 4 material (100% passing 3/8"). Generally, a maximum of 600 grams may be tested utilizing the mechanical washing device.

(a) Fill the washing device with water to the bottom of the windows. Transfer the sample to the washing device, and wash all material clinging to the sample container into the washing device. Utilizing the water tube, and air tube if necessary, agitate the sample vigorously enough so that it causes the material to go into suspension, but not enough to cause splattering to reach the top of the cylinder. Continue this washing action, taking care that there is no loss of sample by splattering or overflowing. (If the No. 200 sieve tends to plug excessively, this may be overcome to some extent by tapping the washing device with the palm of the hand or by washing down the inside of the sieve with a low stream of water.) Washing shall continue until the wash water becomes clear.

(b) Turn off the water and compressed air and remove the metal tube(s), rinsing clinging material back into the sample. Wash the sample into a container of sufficient capacity to hold the water and sample; allow the particles to settle and decant the excess water.

(c) Dry the sample to constant weight at a temperature that will not cause the material to be lost due to splattering.

(d) Allow the sample to cool, reweigh and record to the nearest gram as the fine sieve "Total Dry Weight".

(e) Subtract the "Total Dry Weight" from the "Dry Wt. of Pass No. 4 Split", and record as the "Elutriation".

HAND WASHING (REFEREE METHOD)

7. (a) Place the sample in a pan of sufficient size and capacity to allow washing without spillage. Cover with adequate water to thoroughly wash aggregate. Agitate the contents of the pan vigorously in order to completely separate all particles finer than the No. 200 sieve from the coarser particles, and to bring the finer material into suspension so that it will be removed by decantation of the water.

(b) Decant the wash water through a nest of No. 16 and No. 200 sieves.

(c) Repeat the washing and decanting cycle until the water becomes clear.

(d) Thoroughly wash all material remaining on the No. 16 and the No. 200 sieves and return to the sample.

(e) After the particles have settled in the pan, carefully decant any excess water, assuring that no particles are lost.

(f) Dry the sample to constant weight at a temperature that will not cause material to be lost due to splattering.

(g) Allow the sample to cool, reweigh and record to the nearest gram as the fine sieve "Total Dry Weight".

(h) Subtract the "Total Dry Weight" from the "Dry Wt. of Pass No. 4 Split", and record as the "Elutriation".

SIEVING OF FINE AGGREGATE

8. (a) Place the washed and dried fine aggregate sample into the top of the nested sieves, close the nest of sieves with lid.

(b) The material shall be subjected to sieving by hand or in a mechanical sieve shaker. The sieving action shall cause the particles to bounce and turn so as to

present different orientations to the sieving surface. No particles shall be hand manipulated for passing any of the nested sieves. The sieving shall be of sufficient time to assure that the criteria for "thoroughness of sieving" described in paragraph 4(d) is achieved.

(c) Overloading of sieves shall be avoided. The quantity of material on a given sieve at the completion of sieving shall not exceed 4 grams per square inch of sieving area (201 grams for an 8 inch diameter sieve and 452 grams for a 12 inch sieve). As the weight retained on each individual sieve size is determined, it should be compared with the corresponding overloading criteria prior to combining the weighed material. If overloading occurs, proper corrective action to regulate the amount of material on a sieve shall be taken. This may be accomplished by splitting the material which is retained on the overloaded sieve, resieving each portion, and combining weights.

(d) Starting with the largest of the nested sieves, the material retained on the individual sieves and in the bottom pan shall be weighed and recorded.

(e) Do not discard any of the sieved material until the sum of the individual weights is compared to the weight of sample prior to sieving. If the difference between the two weights is less than or equal to 1.0% of the weight of sample prior to sieving, an adjustment in weight shall be made on the sieve which has the largest weight retained, except no adjustments shall be made on the minus No. 200 material. If the difference is greater than 1.0% the sample shall be recombined, resieved, and carefully reweighed.

PRECAUTIONS

9. (a) Check sieves at least daily for broken or distorted wire, and replace any sieves found to be damaged or excessively worn.

(b) Sieves not conforming to AASHTO M 92 must be replaced.

(c) Do not repair wire cloth.

(d) Clean sieves carefully after each shaking, using the proper instrument to reduce chances of damaging the mesh.

(e) All mechanical equipment shall be inspected frequently and maintained by greasing, cleaning, and repair of worn out parts.

CALCULATIONS

10. The calculations for determining the sieve analysis are as follows. Examples of these calculations are given in Figures 2 and 3.

(a) The calculations to determine the % passing values for the coarse sieve anaylsis are performed as described below:

1) For the largest sieve which has no material retained, record the percent passing as 100. Determine a factor for calculating the coarse sieve analysis by the following. Record the coarse sieve factor to at least six decimal places.

$$\text{Coarse Sieve Factor} = \frac{100}{\text{Coarse Sieve Total}}$$

2) The percent passing for each sieve in the coarse sieve analysis is determined by multiplying the weight retained on that sieve times the coarse sieve factor, and subtracting the result from the unrounded % passing for the next larger sieve, as shown below. Values for "weight retained times the coarse sieve factor" and "percent passing each sieve" shall be determined and used in the calculations to at least six decimal places. The percent passing value for each sieve is recorded in the sieve analysis to the nearest whole percent.

$$\text{Percent Passing Desired Sieve} = \left[\text{Unrounded \% Pass for next larger sieve}\right] - \left[\text{Weight Retained on Desired Sieve} \times \text{Coarse Factor}\right]$$

3) As a check on the coarse sieve analysis, multiply the weight of minus No. 4 material times the coarse sieve factor, as shown below. The result of this calculation, rounded to the nearest whole percent, should be the same as the value for percent passing the No. 4 sieve determined in the paragraph above.

$$\text{Check for Percent Passing No. 4} = \left[\text{Wt. of Pass No. 4} \times \text{Coarse Factor}\right]$$

(b) The calculations to determine the % passing values for the fine sieve analysis are performed as described below:

1) Determine a factor for the fine sieve analysis by dividing the percent passing the No. 4 sieve (which has been recorded to the nearest whole percent) by the "Dry Weight of Pass #4 Split", as shown below. Record the fine sieve factor to at least six decimal places. If all the pass No. 4 material from coarse sieving was subjected to elutriation and fine sieving, a fine sieve factor is not determined. Rather, the coarse sieve factor is utilized and the calculation of the percent passing each sieve is continuous through the entire sieve analysis.

$$\text{Fine Sieve Factor} = \frac{\text{Rounded Percent Pass No. 4}}{\text{Dry Wt. of Pass No. 4 Split}}$$

2) The percent passing for each sieve in the fine sieve analysis is determined by multiplying the weight retained on that sieve times the fine sieve factor, and subtracting the result from the unrounded % passing the next larger sieve, with the exception of the percent passing the No. 4 which has previously been recorded to the nearest whole percent. The equation for determining the percent passing each sieve is shown below. Values for "weight retained times the fine sieve factor" and "percent passing each sieve" shall be determined and used in the calculations to at least six decimal places. The percent passing value for each sieve is recorded in the sieve analysis to the nearest whole percent, except the percent passing the No. 200 sieve is recorded to the nearest 0.1 percent.

$$\text{Percent Passing Desired Sieve} = \left[\text{Unrounded \% Pass for next larger sieve}\right] - \left[\text{Weight Retained on Desired Sieve} \times \text{Fine Factor}\right]$$

3) As a check on the fine sieve analysis, the weight of material passing the No. 200 from sieving is added to the elutriation weight, and this total is multiplied times the fine sieve factor, as shown below. The result of this calculation, rounded to the nearest 0.1 percent, should be the same as the value for the percent passing the No. 200 determined in the paragraph above.

$$\text{Check for percent Passing No. 200} = \left[\text{Wt. of Passing No. 200} + \text{Elutriation Weight}\right] \times \text{Fine Factor}$$

(c) If desired, obtain the percent retained on each sieve by subtracting the rounded % passing value for that sieve from the rounded % passing value for the next larger sieve, as shown below.

$$\text{\% Retained for Desired Sieve} = \left[\text{Rounded \% Pass Next Larger Sieve} - \text{Rounded \% Pass the Desired Sieve}\right]$$

(d) Other methods may be used that differ from that specified in paragraphs (a) and (b) above to determine % passing each sieve, so long as the method utilized has been proven to give equivalent results. However, any procedure which includes recording percent retained values prior to completing the calculation of all percent passing values is not allowed.

PROCEDURE WHEN SAMPLE IS DRIED TO CONSTANT WEIGHT PRIOR TO SIEVING

11. The following is a brief outline of the procedure to be used when the sample is dried to constant weight prior to sieving. An example of this procedure is shown in Figure 2.

(a) Prepare sample, dry to constant weight, allow to cool, and record as "Coarse Sieve Total", (3087 in the example).

(b) Perform coarse sieving.

(c) Record the weight of the material in the appropriate "Weights Retained" box for each sieve and the pan.

(d) Sum the individual weights retained for each sieve, compare to the weight of sample prior to sieving (Coarse Sieve Total), and adjust or resieve as necessary.

(e) Split the pass No. 4 material to at least 500 grams and record as "Dry Wt. of Pass No. 4 Split", (533).

(f) Perform elutriation on the dry - #4 split, dry back to constant weight, allow to cool, and record as the "Total Dry Weight", (491).

ARIZONA DEPARTMENT OF TRANSPORTATION
SOIL AND AGGREGATE TABULATION

LAB NUMBER	PROJ CODE	ORG NUMBER	MATL	TYPE	PURPOSE	TEST LAB	SIZE	SIZE %
93-6666	7777	8888	MA	12	A	P	-	+

TEST NO.	LOT OR SUFFIX	SAMPLED BY	MO DAY YEAR	TIME
17	+	A. JONES	11 16 93	9:25 ☒ AM ☐ PM

SAMPLED FROM	LIFT NO.	RDWY	STATION	PLUS
COLD FEED	+	+	+	+

IF MILEPOST, INPUT DECIMAL

ORIGINAL SOURCE	PROJECT ENGINEER / SUPERVISOR	PROJECT NUMBER	TRACS NUMBER
PIT #4444	B. SMITH	F-099-9(99)	H999901C

REMARKS
EXAMPLE FOR PROCEDURE WHEN SAMPLE IS DRIED TO CONSTANT WEIGHT PRIOR TO SIEVING-(SECTION 11).

ARIZ 201

% OVERSIZE: +3" ☐ ____ +6" ☐ ____

COARSE FACTOR: 032394

WET SAMPLE PREWEIGHT = -
WET WT. OF -#4 = -
-#4 SPLIT WET WT. = -

	WEIGHTS RETAINED	% RET.	% PASS	SPECS.	CUMULATIVE % RET. FINENESS MODULUS
3" ☐					
2 1/2"					
2"					
1 1/2"					
1"					
3/4"	0		100	100	
1/2"	92	3	97	89-100	
3/8"	568	18	79	70-82	
1/4"	354	12	67		
#4	401	13			
-#4	1672	✓	54		
Total	3087				

IF TOTAL SAMPLE IS WASHED:
UNWASHED WT. = -
WASHED WT. = -
ELUTRIATION = -

DRY WT. OF-#4 SPLIT: 533

FINE FACTOR: 101313

	WEIGHTS RETAINED	% RET.	% PASS	SPECS.	
#8	89	9	45	40-52	
#10	56	6	39		
#16	103	10	29		
#30	68	7	22		
#40	40	4	18	13-23	
#50	45	5	13		
#100	51	5	8		
#200	37	4			
-#200	2	✓	4.5	2.4-6.0	
Total	491				
Elutriation	42				

Dry Weight

FINENESS MODULUS = TOTAL CUMULATIVE % RET. / 100

T = AASHTO Tests

				SPECS.
Liquid Limit (LL)	T - 89			
Plastic Limit (PL)	T - 90			
Plasticity Index (PI) = LL - PL	T - 90			
Abrasion Method (A,B,C,D)	T - 96			
@ 100 Revolutions			%	%
@ 500 Revolutions			%	%
Absorption, H_2O	T - 85 ARIZ 211		%	
Specific Gravity, SSD	T - 85 ARIZ 211			
Specific Gravity, OD	T - 85 ARIZ 211			
Proctor Method				A - ARIZ 225 C - ARIZ 226 D - ARIZ 226 AD - ARIZ 245 AI - ARIZ 232 ADI - ARIZ 246
Optimum Moisture			%	
Max. Dry Density			PCF	
Sand Equivalent	T - 176 ARIZ 242 (MAFC)			
Fractured Faces Weight (Wf)				
Total Sample Weight (Wa)				
Fractured Faces (FF) = $\frac{Wf}{Wa}$ x 100	ARIZ 212		%	%
Wet Weight (W)			g	
Dry Weight (D)			g	
Moisture Content = $\frac{W-D}{D}$ x 100	T - 255 T - 265		%	
Flakiness Index	ARIZ 233		%	%
Carbonates	ARIZ 238		%	%
pH	ARIZ 236 OR 237			
Resistivity (ohm-cm)	ARIZ 236			
Soluble Salts (PPM)	ARIZ 237			

WHITE ☒
YELLOW ☐
BLUE ☐

RECEIVED DATE	TEST OPERATOR & DATE	SUPERVISOR & DATE
11-16-93	Joe Dogood 11-16-93	Ted Headman 11-16-93

44-6083 R9/93

FIGURE 2

(g) Determine and record "Elutriation" by subtracting the "Total Dry Weight" from the "Dry Wt. of Pass No. 4 Split", (533 - 491 = 42).

(h) Perform fine sieving on the material left from elutriation using the No. 8 sieve down to the No. 200.

(i) Record the weight of material in the appropriate "Weights Retained" box for each sieve.

(j) Sum the individual weights retained for each sieve, compare to the weight of sample prior to sieving (fine sieve Total Dry Weight), and adjust or resieve as needed.

(k) Determine the sieve analysis of the material as described in Section 10.

PROCEDURE WHEN SAMPLE IS NOT DRIED TO CONSTANT WEIGHT PRIOR TO SIEVING

12. The following is an outline and description of the procedure to be used when the sample is not dried to constant weight prior to sieving. An example of this procedure is shown in Figure 3.

(a) Prepare sample, dry to free flowing condition, and record this weight as "Wet Sample Preweight", (13010 in the example).

(b) Perform coarse sieving.

(c) Record the weight of the material in the appropriate "Weights Retained" box for each sieve, except record the weight of pass No. 4 material as the "Wet Wt. of - #4", (7365).

(d) Sum the individual weights retained for each sieve, compare to weight of sample prior to sieving (Wet Sample Preweight), and adjust or resieve as needed.

(e) The wet weight of pass No. 4 material is corrected for moisture using either a split of, or the entire amount of, the pass No. 4 material.

(f) If a split of the pass No. 4 material is to be used to correct the weight of pass No. 4 material for moisture, immediately split the passing No. 4 material to at least 500 grams and record as the "- #4 Split Wet Wt.", (506). Dry the sample to constant

ARIZONA DEPARTMENT OF TRANSPORTATION
SOIL AND AGGREGATE TABULATION

LAB NUMBER	PROJ CODE	ORG NUMBER	MATL	TYPE	PURPOSE	TEST LAB	SIZE	SIZE %
93-4444	7777	8888	AB	2	A	P	-	+

TEST NO.	LOT OR SUFFIX	SAMPLED BY	MO DAY YEAR	TIME
9	+	A. JONES	10 13 93	2:35 ☐ AM ☒ PM

SAMPLED FROM	LIFT NO.	RDWY	STATION PLUS
WINDROW	1	NB	980+50 (IF MILEPOST, INPUT DECIMAL)

ORIGINAL SOURCE	PROJECT ENGINEER / SUPERVISOR	PROJECT NUMBER	TRACS NUMBER
PIT # 3333	B. SMITH	F-099-9(99)	H999901C

REMARKS
EXAMPLE FOR PROCEDURE WHEN SAMPLE IS NOT DRIED TO CONSTANT WEIGHT PRIOR TO SIEVING - (SECTION 12).

ARIZ 201

% OVERSIZE: +3" ☐ ____ +6" ☐ ____

COARSE FACTOR: 007765

WET SAMPLE PREWEIGHT = 13010
WET WT. OF -#4 = 7365
-#4 SPLIT WET WT. = 506

	WEIGHTS RETAINED	% RET.	% PASS	SPECS.	CUMULATIVE % RET. / FINENESS MODULUS
3" ☐					
2 1/2"					
2"					
1 1/2"	0		100	100	
1"	910	7	93	90-100	
3/4"	1445	11	82		
1/2"	645	5	77		
3/8"	1745	14	63		
1/4"	515	4	59		
#4	385	3			
-#4	7234	✓	56		
Total	12879				

IF TOTAL SAMPLE IS WASHED:
UNWASHED WT. = -
WASHED WT. = -
ELUTRIATION = -

DRY WT. OF -#4 SPLIT: 497

FINE FACTOR: .112676

	WEIGHTS RETAINED	% RET.	% PASS	SPECS.	
#8	42	5	51	35-55	
#10	76	8	43		
#16	34	4	39		
#30	54	6	33		
#40	103	12	21		
#50	44	5	16		
#100	46	5	11		
#200	39	4			
-#200	2	✓	6.6	0-8.0	
Total	440 (Dry Weight)				
Evaluation	57				

T = AASHTO Tests

					SPECS.
Liquid Limit (LL)	T - 89				
Plastic Limit (PL)	T - 90				
Plasticity Index (PI) = LL - PL	T - 90				
Abrasion Method (A,B,C,D)	T - 96				
@ 100 Revolutions				%	%
@ 500 Revolutions				%	%
Absorption, H_2O	T - 85 ARIZ 211			%	
Specific Gravity, SSD	T - 85 ARIZ 211				
Specific Gravity, OD	T - 85 ARIZ 211				
Proctor Method					A - ARIZ 225; C - ARIZ 226; D - ARIZ 226; AD - ARIZ 245; AI - ARIZ 232; ADI - ARIZ 246
Optimum Moisture				%	
Max. Dry Density				PCF	
Sand Equivalent	T - 176 ARIZ 242 (MAFC)				
Fractured Faces Weight (Wf)					
Total Sample Weight (Wa)					
Fractured Faces (FF) = $\frac{Wf}{Wa}$ x 100	ARIZ 212			%	%
Wet Weight (W)				g	
Dry Weight (D)				g	
Moisture Content = $\frac{W-D}{D}$ x 100	T - 255 T - 265			%	
Flakiness Index	ARIZ 233			%	%
Carbonates	ARIZ 238			%	%
pH	ARIZ 236 OR 237				
Resistivity (ohm-cm)	ARIZ 236				
Soluble Salts (PPM)	ARIZ 237				

FINENESS MODULUS = $\frac{\text{TOTAL CUMULATIVE \% RET.}}{100}$

WHITE ☒
YELLOW ☐
BLUE ☐

RECEIVED DATE	TEST OPERATOR & DATE	SUPERVISOR & DATE
10-13-93	JOE DOLAND 10-14-93	TED HEADMAN 10-14-93

44-9353 R8/93

FIGURE 3

weight, allow to cool, and record the weight as "Dry Wt. of Pass #4 Split", (497). If an elutriation and fine sieve analysis is to be performed, this split is used for that testing. Determine and record the "weight of pass No. 4 material" (7234) by the following:

$$\text{Weight of Pass No. 4 Material} = \left[\text{Wet Wt. of - \#4}\right] \times \left[\frac{\text{Dry Wt. of Pass No. 4 Split}}{\text{- \#4 Split Wet Wt.}}\right]$$

(g) If the entire amount of the pass No. 4 material is to be used to correct the weight of pass No. 4 material for moisture, the material is dried to constant weight and allowed to cool. The dry weight is recorded as the "weight of pass No. 4 material". If an elutriation and fine sieve analysis is to be performed on this material, the dry weight is also recorded as the "Dry Wt. of Pass No. 4 Split".

(h) Determine and record the sample "Coarse Sieve Total" (12879) by the following:

$$\text{Coarse Sieve Total} = \left[\text{Wet Sample Preweight}\right] - \left[\text{Wet Wt. of - \#4} - \text{Weight of Pass No. 4 Material}\right]$$

(i) If required, perform elutriation on the dry - #4 split, dry back to constant weight, allow to cool, and record as the "Total Dry Weight", (440).

(j) Determine and record "Elutriation" by subtracting the "Total Dry Weight" from the "Dry Wt. of Pass No. 4 Split", (497 - 440 = 57).

(k) Perform fine sieving on the material left from elutriation using the No. 8 sieve down to the No. 200.

(l) Record the weight of material in the appropriate "Weights Retained" box for each sieve.

(m) Sum the individual weights retained for each sieve, compare to the weight of sample prior to sieving (fine sieve Total Dry Weight), and adjust or resieve as needed.

(n) Determine the sieve analysis of the material as described in Section 10.

REPORT

13. (a) The sieve analysis shall be reported either as shown in the example given in Figure 2 for a sample which has been dried to constant weight prior to sieving, or as shown in the example given in Figure 3 for a sample which has not been dried to constant weight prior to sieving.

(b) A blank Soils and Aggregate Tabulation laboratory card is provided in Figure 4.

ARIZONA DEPARTMENT OF TRANSPORTATION
SOIL AND AGGREGATE TABULATION

LAB NUMBER | PROJ CODE | ORG NUMBER | MATL | TYPE | PUR-POSE | TEST LAB | SIZE | SIZE %

TEST NO. | LOT OR SUFFIX | SAMPLED BY | MO | DAY | YEAR | TIME ☐ AM ☐ PM

SAMPLED FROM | LIFT NO. | RDWY | STATION | PLUS

IF MILEPOST, INPUT DECIMAL

ORIGINAL SOURCE | PROJECT ENGINEER / SUPERVISOR | PROJECT NUMBER | TRACS NUMBER

REMARKS

ARIZ 201

% OVERSIZE: +3" ☐ | +6" ☐

COARSE FACTOR

WET SAMPLE PREWEIGHT = _____
WET WT. OF -#4 = _____
- #4 SPLIT WET WT. = _____

	WEIGHTS RETAINED	% RET.	% PASS	SPECS.	CUMULATIVE % RET. FINENESS MODULUS
3" ☐					
2 1/2"					
2"					
1 1/2"					
1"					
3/4"					
1/2"					
3/8"					
1/4"					
#4					
-#4					
Total					

IF TOTAL SAMPLE IS WASHED:
UNWASHED WT. = _____
WASHED WT. = _____
ELUTRIATION = _____

DRY WT. OF-#4 SPLIT | FINE FACTOR

	WEIGHTS RETAINED	% RET.	% PASS	SPECS.	
#8					
#10					
#16					
#30					
#40					
#50					
#100					
#200					
-#200					
Total					
Elutriation					

Dry Weight

FINENESS MODULUS = TOTAL CUMULATIVE % RET. / 100

T = AASHTO Tests

						SPECS.
Liquid Limit (LL)	T - 89					
Plastic Limit (PL)	T - 90					
Plasticity Index (PI) = LL - PL	T - 90					
Abrasion Method (A,B,C,D)	T - 96					
@ 100 Revolutions					%	%
@ 500 Revolutions					%	%
Absorption, H_2O	T - 85 ARIZ 211				%	
Specific Gravity, SSD	T - 85 ARIZ 211					
Specific Gravity, OD	T - 85 ARIZ 211					
Proctor Method						A - ARIZ 225 C - ARIZ 226 D - ARIZ 226 AD - ARIZ 245 AI - ARIZ 232 ADI - ARIZ 246
Optimum Moisture					%	
Max. Dry Density					PCF	
Sand Equivalent	T - 176 ARIZ 242 (MAFC)					
Fractured Faces Weight (Wf)						
Total Sample Weight (Wa)						
Fractured Faces (FF) = $\frac{Wf}{Wa}$ x 100	ARIZ 212				%	%
Wet Weight (W)					g	
Dry Weight (D)					g	
Moisture Content = $\frac{W-D}{D}$ x 100	T - 255 T - 265				%	
Flakiness Index	ARIZ 233				%	%
Carbonates	ARIZ 238				%	%
pH	ARIZ 238 OR 237					
Resistivity (ohm-cm)	ARIZ 236					
Soluable Salts (PPM)	ARIZ 237					

WHITE ☐
YELLOW ☐
BLUE ☐

RECEIVED DATE | TEST OPERATOR & DATE | SUPERVISOR & DATE

44-6353 R9/93

FIGURE 4

COMPOSITE GRADING

(An Arizona Method)

Scope

1. This is a method of combining two or more samples of different gradations to produce a final product of a composited gradation.

Procedure

2. (a) For each sample; multiply the percent retained on each sieve by the "Decimal % of Composite" for the sample and record the results to the nearest 0.1%, except that the amount passing the No. 200 sieve shall be to the nearest 0.01%. Adjust the fractions of material for each aggregate sample as necessary to correspond to the total percent of composite for that sample, except that the percent passing the No. 200 sieve shall not be adjusted.

(b) Add the resultant percentages retained on each sieve for all samples and record as the composite % retained. Round the % retained for each sieve to the nearest 1%, except the amount passing the No. 200 sieve shall be rounded and recorded to the nearest 0.1%.

NOTE: Adjustments to the % retained and the % retained rounded may be necessary so that the total equals 100%, except that the % passing the No. 200 sieve shall not be adjusted.

(c) To obtain the composite percent passing each sieve, start with the Pass No. 200 fraction (rounded to the nearest whole percent), in the example 3%; and add the percent retained on the No. 200 sieve (3%), and record the sum as the % passing the No. 100 sieve (6%). Add the % retained on the No. 100 to this total and record as the % passing the No. 50 sieve (6 + 8 = 14). Repeat this procedure for all sieves, the final value should be 100%.

(d) If it is preferred, the % passing each sieve may be determined by beginning with the largest sieve which has material retained, in the example 13% was retained on the 1/2" sieve; subtract the % retained from 100 and record as % passing (100 - 13 = 87); subtract the % retained on the next smaller sieve and record as % passing (87 - 11 retained on the 3/8" = 76); continue this procedure for all sieves, the final value should be the percent passing the No. 200 sieve, rounded to the whole percent.

NOTE: Figure 1 shows an example of a sieve analysis as reported from ARIZ 201, for four individual samples. Figure 2 shows an example of the calculations described in paragraphs (a), (b), (c), and (d), and a completed composite grading of the four individual samples.

(e) If a calculated composite is desired using the percent passing each sieve, it may be obtained by multiplying the % pass each sieve by the "decimal % of composite" for each sample, and accumulate for the resultant composite percent pass each sieve in similar manner as in the method described above for composite % retained. After the composite % passing each sieve is calculated the composite % retained is determined by the following:

$$\begin{bmatrix}\text{\% Retained on} \\ \text{Individual} \\ \text{Sieve}\end{bmatrix} = \begin{bmatrix}\text{\% Passing} \\ \text{next larger} \\ \text{sieve size}\end{bmatrix} - \begin{bmatrix}\text{\% Passing} \\ \text{desired} \\ \text{sieve size}\end{bmatrix}$$

NOTE: Figure 3 shows an example of the calculations described in paragraph (e), and a completed composite grading of the four individual samples.

SAMPLE #1

G 3 — % OVERSIZE: +3" □ (8, 9); +6" □ (11) — COARSE FACTOR: 015040 (no punch)

	WEIGHTS RETAINED					% RET.	% PASS
3" □	12				16		
2½"	17				21		
2"	22				26		
1½"	27				31		
1"	32				36		
3/4"	37				41 0	0	100
1/2"	42	3	6	3	6 46	55	45
3/8"	47	2	6	6	0 51	40	5
1/4"	52		3	0	2 56	5	0
#4	57			1	9 61	0	
-#4	62			3	2 66		0
Total	67	6	6	4	9 71		

G 4 — WT PASS #4 SPLIT (8, 10) — FINE SIEVE FACTOR: (no punch)

	WEIGHTS RETAINED			% RET.	% PASS
#8	11		13		
#10	14		16		
#16	17		19		
#30	20		22		
#40	23		25		
#50	26		28		
#100	29		31		
#200	32		34		
-#200	35		37		
Total			Dry Weight		
Elutriation					

SAMPLE #2

G 3 — % OVERSIZE: +3" □ (8, 9); +6" □ (11) — COARSE FACTOR: 039200 (no punch)

	WEIGHTS RETAINED					% RET.	% PASS
3" □	12				16		
2½"	17				21		
2"	22				26		
1½"	27				31		
1"	32				36		
3/4"	37				41		
1/2"	42				46 0	0	100
3/8"	47		2	4	3 51	10	90
1/4"	52	1	2	3	3 56	48	42
#4	57		6	9	7 61	27	
-#4	62		3	7	8 66		15
Total	67	2	5	5	1 71		

G 4 — WT PASS #4 SPLIT (8, 10) — FINE SIEVE FACTOR: 029586 (no punch)

	WEIGHTS RETAINED			% RET.	% PASS
#8	11	4	1 7 13	12	3
#10	14		2 1 16	1	2
#16	17		1 9 19	1	1
#30	20		1 0 22	0	1
#40	23		2 25	0	1
#50	26		1 28	0	1
#100	29		4 31	0	1
#200	32		5 34	0	
-#200	35		1 37		0.8
Total		4	8 0 Dry Weight		
Elutriation			2 7		

SAMPLE #3

G 3 — % OVERSIZE: +3" □ (8, 9); +6" □ (11) — COARSE FACTOR: 095969 (no punch)

	WEIGHTS RETAINED					% RET.	% PASS
3" □	12				16		
2½"	17				21		
2"	22				26		
1½"	27				31		
1"	32				36		
3/4"	37				41		
1/2"	42				46		
3/8"	47				0 51	0	100
1/4"	52				9 56	1	99
#4	57			9	8 61	9	
-#4	62		9	3	5 66		90
Total	67	1	0	4	2 71		

G 4 — WT PASS #4 SPLIT (8, 10) — FINE SIEVE FACTOR: 197368 (no punch)

	WEIGHTS RETAINED			% RET.	% PASS
#8	11	1 5	0 13	29 ~~30~~	61
#10	14	5	2 16	10	51
#16	17	9	5 19	19	32
#30	20	6	2 22	12	20
#40	23	1	7 25	3	17
#50	26	1	4 28	3	14
#100	29	1	8 31	4	10
#200	32	1	3 34	3	
-#200	35		2 37		6.9
Total		4	2 3 Dry Weight		
Elutriation			3 3		

SAMPLE #4

G 3 — % OVERSIZE: +3" □ (8, 9); +6" □ (11) — COARSE FACTOR: 067751 (no punch)

	WEIGHTS RETAINED					% RET.	% PASS
3" □	12				16		
2½"	17				21		
2"	22				26		
1½"	27				31		
1"	32				36		
3/4"	37				41		
1/2"	42				46		
3/8"	47				51		
1/4"	52				0 56	0	100
#4	57				7 61	0	
-#4	62	1	4	6	9 66		100
Total	67	1	4	7	6 71		

G 4 — WT PASS #4 SPLIT (8, 10) — FINE SIEVE FACTOR: 196850 (no punch)

	WEIGHTS RETAINED			% RET.	% PASS
#8	11	1	8 13	4	96
#10	14		8 16	2	94
#16	17	2	9 19	6	88
#30	20	8	8 22	17	71
#40	23	9	0 25	18	53
#50	26	1 0	8 28	21	32
#100	29	1 1	8 31	23	9
#200	32	3	2 34	6	
-#200	35		1 37		3.3
Total		4	9 2 Dry Weight		
Elutriation			1 6		

FIGURE 1

SIEVE SIZE	SAMPLE #1 % OF COMPOSITE = 23			SAMPLE #2 % OF COMPOSITE = 20			SAMPLE #3 % OF COMPOSITE = 27			SAMPLE #4 % OF COMPOSITE = 30			COMPOSITE % Ret.		
	% Ret.	% Comp.	% Ret.	% Ret.	% Comp.	% Ret.	% Ret.	% Comp.	% Ret.	% Ret.	% Comp.	% Ret.	% Ret.	Rounded	% Pass
3/4	0	x.23													100
1/2	55	x.23	12.6	0									12.6	13	87
3/8	40	x.23	9.2	10	x.20	2.0	0						11.2	11	76
1/4	5	x.23	1.2	48	x.20	9.6	1	x.27	0.3				11.1	11	65
#4	0	x.23		27	x.20	5.4	9	x.27	2.4	0			7.8	8	57
#8	0	x.23		12	x.20	2.4	29	x.27	7.9 ~~7.8~~	4	x.30	1.2	11.5	11	46
#10	0	x.23		1	x.20	0.2	10	x.27	2.7	2	x.30	0.6	3.5	4	42
#16	0	x.23		1	x.20	0.2	19	x.27	5.1	6	x.30	1.8	7.1	7	35
#30	0	x.23		0	x.20		12	x.27	3.2	17	x.30	5.1	8.3	8	27
#40	0	x.23		0	x.20		3	x.27	0.8	18	x.30	5.4	6.2	6	21
#50	0	x.23		0	x.20		3	x.27	0.8	21	x.30	6.3	7.1	7	14
#100	0	x.23		0	x.20		4	x.27	1.1	23	x.30	6.8 ~~6.9~~	7.9	8	6
#200	0	x.23		0	x.20		3	x.27	0.8	6	x.30	1.8	2.6	3	3.0
Pass #200	0	x.23		0.8	x.20	0.16	6.9	x.27	1.86	3.3	x.30	0.99	3.01	3.0	
TOTAL	100		23.0	99.8		19.96	99.9		26.96	100.3		29.99	99.91		

FIGURE 2

SIEVE SIZE	SAMPLE #1 % OF COMPOSITE = 23			SAMPLE #2 % OF COMPOSITE = 20			SAMPLE #4 % OF COMPOSITE = 27			SAMPLE #4 % OF COMPOSITE = 30			COMPOSITE		
	% Pass	% Comp.	% Pass	% Pass	% Comp.	% Pass	% Pass	% Comp.	% Pass	% Pass	% Comp.	% Pass	% Pass	% Ret.	% Pass Rounded
3/4	100	x.23	23.0	100	x.20	20.0	100	x.27	27.0	100	x.30	30.0	100.0	100	100
1/2	45	x.23	10.4	100	x.20	20.0	100	x.27	27.0	100	x.30	30.0	87.4	13	87
3/8	5	x.23	1.2	90	x.20	18.0	100	x.27	27.0	100	x.30	30.0	76.2	11	76
1/4	0	x.23	0	42	x.20	8.4	99	x.27	26.7	100	x.30	30.0	65.1	11	65
#4				15	x.20	3.0	90	x.27	24.3	100	x.30	30.0	57.3	8	57
#8				3	x.20	0.6	61	x.27	16.5	96	x.30	28.8	45.9	11	46
#10				2	x.20	0.4	51	x.27	13.8	94	x.30	28.2	42.4	4	42
#16				1	x.20	0.2	32	x.27	8.6	88	x.30	26.4	35.2	7	35
#30				1	x.20	0.2	20	x.27	5.4	71	x.30	21.3	26.9	8	27
#40				1	x.20	0.2	17	x.27	4.6	53	x.30	15.9	20.7	6	21
#50				1	x.20	0.2	14	x.27	3.8	32	x.30	9.6	13.6	7	14
#100				1	x.20	0.2	10	x.27	2.7	9	x.30	2.7	5.6	8	6
#200				0.8	x.20	0.16	6.9	x.27	1.86	3.3	x.30	0.99	3.01	3	3.0

FIGURE 3

SPECIFIC GRAVITY AND ABSORPTION OF COARSE AGGREGATE

(A Modification of AASHTO Designation T 85)

SCOPE

1. (a) This method covers the determination of specific gravity and absorption of coarse aggregate. The specific gravity may be expressed as bulk (O.D.) specific gravity, bulk (SSD) specific gravity [saturated surface dry], or apparent specific gravity. The bulk (SSD) specific gravity and absorption are based on aggregate after 15 to 19 hours soaking in water. This method is not intended to be used with lightweight aggregate.

(b) The specific gravity and absorption of coarse aggregate is normally determined on plus 4.75 mm (No. 4) material. When corresponding fine aggregate specific gravity and absorption are determined on pass 2.36 mm (No. 8) material, in accordance with Arizona Test Method 211, the coarse aggregate specific gravity and absorption shall be performed on plus 2.36 mm (No. 8) material. "Coarse aggregate" as herein referenced will be for either plus 4.75 mm (No. 4) or plus 2.36 mm (No. 8) material. Coarse aggregate specific gravity and absorption for mineral aggregates used in asphaltic concrete, other than asphaltic concrete friction course, shall be determined on plus 4.75 mm (No. 4) material."

(c) This test method may involve hazardous material, operations, or equipment. This test method does not purport to address all of the safety concerns associated with its use. It is the responsibility of the user to consult and establish appropriate safety and health practices and determine the applicability of any regulatory limitations prior to use.

(d) See Appendix A1 of the Materials Testing Manual for information regarding the procedure to be used for rounding numbers to the required degree of accuracy.

(e) Metric (SI) units and values are shown in this test method with English units and values following in parentheses. Values given for metric and English units may be numerically equivalent (soft converted) for the associated units, or they may be given as rounded or rationalized values (hard converted). Either the metric or English units along with their corresponding values shall be used in accordance with

applicable specifications. See Appendix A2 of the Materials Testing Manual for additional information on the metric system.

(f) Reference may be made to AASHTO T 85 for additional information, including: terminology, significance and use, precision and bias, development of equations, and interrelationships between specific gravities and absorption as defined in AASHTO T 85 and T 84.

APPARATUS

2. Requirements for the frequency of equipment calibration and verification are found in Appendix A3 of the Materials Testing Manual. Apparatus for this test procedure shall consist of the following:

(a) Balance - A balance capable of measuring the maximum weight to be determined and conforming to the requirements of AASHTO M 231, except the readability and sensitivity of any balance utilized shall be at least one gram. The balance shall be equipped with suitable apparatus for suspending the sample container in water from the center of the weighing platform or pan of the balance.

(b) Sample Container - A wire basket, of adequate size for the material being tested, and so constructed to prevent trapping of air when submerged. For test samples of plus 4.75 mm (No. 4) material, the wire mesh shall be 3.35 mm (No. 6), 2.36 mm (No. 8), or 2.00 mm (No. 10). For test samples of plus 2.36 mm (No. 8) material, the wire mesh shall be 2.00 (No. 10). The wire for suspending the container from the balance shall be of the smallest practical size to minimize any possible effects of a variable immersed length.

(c) Water Tank - A watertight tank into which the sample and container are placed for complete immersion while suspended below the balance, equipped with an overflow for maintinaing a constant water level.

(d) Sieves - Conforming to AASHTO M 92, and consisting of necessary sieve sizes as described in paragraph 3(b) through 3(d).

SAMPLING

3. (a) Sample the aggregate in accordance with Arizona Test Method 105.

(b) The sample shall be sieved over the appropriate 4.75 mm (No. 4) or 2.36 mm (No. 8) sieve; or, testing may be performed on separate coarse size fractions, as described in paragraph 3(d) and the average values for specific gravity and absorption determined as given in paragraphs 5(c) and 5(e). When testing is performed on separate size fractions of the coarse aggregate, the sieve analysis of the material shall be performed in accordance with Arizona Test Method 201. If the specific gravity and absorption of the fine aggregate is to be determined, save the appropriate passing 4.75 mm (No. 4) or passing 2.36 mm (No. 8) material for testing in accordance with Arizona Test Method 211, otherwise it can be discarded.

(c) If testing is not to be performed using separate size fractions, a representative test sample of the plus 4.75 mm (No. 4) or plus 2.36 mm (No. 8) material with a minimum mass as shown below shall be obtained.

Nominal Maximum Sieve Size, millimeters (inches)	Minimum Mass of Test Sample, kilograms (pounds)
150 (6)	125 (276)
125 (5)	75 (165)
112 (4-1/2)	50 (110)
100 (4)	40 (88)
90 (3-1/2)	25 (55)
75 (3)	18 (40)
63 (2-1/2)	12 (26)
50 (2)	8 (18)
37.5 (1-1/2)	5 (11)
25.0 (1)	4 (8.8)
19.0 (3/4)	3 (6.6)
12.5 (1/2) or less	2 (4.4)

(d) It may be desirable to test the material in separate size fractions. An example is given below which illustrates the procedure to be followed. [If the sample contains more than 15 percent retained on the 37.5 mm (1-1/2") sieve, test the material larger than 37.5 mm (1-1/2") in one or more size fractions separately from the smaller size fraction(s).] When an aggregate is tested in separate size fractions, the minimum mass of test sample for each fraction shall be the difference between the masses specified above for the largest and smallest sieve sizes of the fraction. The smallest size fraction tested shall meet the minimum mass requirements listed above, corresponding to the largest sieve size (passing) of the fraction. Size fractions of more than one sieve shall be proportionate with the sieve analysis for the sizes included.

Example: [A sample with the following sieve anaylsis is tested in the selected separate size fractions shown below.]

Sieve Size	% Retained	% Passing
50 mm (2")	0	100
37.5 mm (1-1/2")	16	84
25.0 mm (1")	10	74
19.0 mm (3/4")	8	66
12.5 mm (1/2")	6	60
9.5 mm (3/8")	4	56
6.3 mm (1/4")	10	46
4.75 mm (# 4)	5	41

Size fraction of passing 50 mm to retained 37.5 mm:
8000 grams - 5000 grams = 3000 grams

Size fraction of passing 37.5 mm to retained 19.0 mm:
5000 grams - 3000 grams = 2000 grams.
For each sieve in this size fraction, the proportionate amount is determined:
Pass 37.5 mm to Retained 25.0 mm:
[10 / (10 + 8)] x 2000 = 1111 grams.
Pass 25.0 mm to Retained 19.0 mm:
[8 / (10 + 8)] x 2000 = 889 grams.

Size fraction of passing 19.0 mm to retained 4.75 mm (or 2.36 mm): 3000 grams.
For each sieve in this size fraction, the proportionate amount is determined:
Pass 19.0 mm to Retained 12.5 mm:
[6 / (6 + 4 + 10 + 5)] x 3000 = 720 grams.
Pass 12.5 mm to Retained 9.5 mm:
[4 / (6 + 4 + 10 + 5)] x 3000 = 480 grams.
Pass 9.5 mm to Retained 6.3 mm:
[10 / (6 + 4 + 10 + 5)] x 3000 = 1200 grams.
Pass 6.3 mm to Retained 4.75 mm:
[5 / (6 + 4 + 10 + 5)] x 3000 = 600 grams.

PROCEDURE

4. (a) Thoroughly wash the test sample to remove dust or other coatings from the surface.

(b) Dry the test sample to constant mass [see paragraph (c) below] at a temperature of 110 ± 5 °C (230 ± 9 °F). Cool in air at room temperature for 1 to 3

hours for test samples of 37.5 mm (1-1/2") nominal maximum size, or longer for larger sizes until the aggregate has cooled to a temperature that is comfortable to handle [approximately 50 °C (122 °F)]. Subsequently immerse the aggregate in water at room temperature for a period of 15 to 19 hours.

(c) Where the absorption and specific gravity values are to be used in proportioning concrete mixtures in which the aggregates will be in their naturally moist condition, the requirement for initial drying to constant mass may be eliminated and, if the surfaces of the particles in the sample have been kept continuously wet until test, the 15 to 19 hour soaking may also be eliminated.

NOTE: Values for absorption and bulk (SSD) specific gravity may be significantly higher for aggregate not oven dried before soaking than for the same aggregate which has been dried and soaked as specified in paragraph 4(b). This is especially true of particles larger than 75 mm (3 inch) since the water may not be able to penetrate the pores to the center of the particle in the prescribed soaking period.

(d) Remove the test sample from the water and roll it in a large absorbent cloth or towel until all visible films of water are removed from the surface of the aggregate, wiping the larger particles individually as necessary. Take care to avoid loss of water from aggregate pores during surface-drying by completing the operation as quickly as possible. Immediately determine the mass of the test sample in the saturated surface-dry condition. Record this and all subsequent masses to at least the nearest gram.

(e) After determining the saturated-surface-dry mass place the test sample in the sample container and determine its mass in water at 23.0 ± 1.7 °C (73.4 ± 3.1 °F). Take care to remove all entrapped air before determining the mass, by shaking the container while immersed. The container shall be immersed to a depth sufficient to cover it and the test sample during mass determination.

(f) Dry the test sample to constant mass at a temperature of 110 ± 5 °C (230 ± 9 °F). Cool in air at room temperature 1 to 3 hours, or until the aggregate has cooled to a temperature that is comfortable to handle [approximately 50 °C (122 °F)] and determine the mass.

CALCULATIONS

5. (a) Calculate the bulk (O.D.) specific gravity as shown below:

$$\text{Bulk (O.D.) Specific Gravity} = \frac{A}{(B - C)}$$

Where: A = mass of oven-dry test sample in air, grams.
B = mass of saturated-surface-dry test sample in air, grams.
C = mass of saturated test sample in water, grams.

(b) Calculate the bulk (SSD) specific gravity as shown below:

$$\text{Bulk (SSD) Specific Gravity} = \frac{B}{(B - C)}$$

(c) Calculate the apparent specific gravity as shown below:

$$\text{Apparent Specific Gravity} = \frac{A}{(A - C)}$$

(d) When the sample is tested in separate size fractions, the average value for bulk (O.D.) specific gravity, bulk (SSD) specific gravity, or apparent specific gravity can be computed as the average of the respective specific gravities for the individual size fractions, weighted in proportion to the mass percentage of the size fractions in the original sample.

$$G = \frac{1}{\frac{P1}{100\,(G1)} + \frac{P2}{100\,(G2)} + \ldots + \frac{Pn}{100\,(Gn)}}$$

Where: G = Average specific gravity. All forms of expression of specific gravity can be averaged in this manner.
P1, P2, ... Pn = mass percentage for each size fraction in original sample (total equals 100).
G1, G2, ... Gn = Respective specific gravity values for each size fraction for the type of specific gravity being averaged.

hours for test samples of 37.5 mm (1-1/2") nominal maximum size, or longer for larger sizes until the aggregate has cooled to a temperature that is comfortable to handle [approximately 50 °C (122 °F)]. Subsequently immerse the aggregate in water at room temperature for a period of 15 to 19 hours.

(c) Where the absorption and specific gravity values are to be used in proportioning concrete mixtures in which the aggregates will be in their naturally moist condition, the requirement for initial drying to constant mass may be eliminated and, if the surfaces of the particles in the sample have been kept continuously wet until test, the 15 to 19 hour soaking may also be eliminated.

NOTE: Values for absorption and bulk (SSD) specific gravity may be significantly higher for aggregate not oven dried before soaking than for the same aggregate which has been dried and soaked as specified in paragraph 4(b). This is especially true of particles larger than 75 mm (3 inch) since the water may not be able to penetrate the pores to the center of the particle in the prescribed soaking period.

(d) Remove the test sample from the water and roll it in a large absorbent cloth or towel until all visible films of water are removed from the surface of the aggregate, wiping the larger particles individually as necessary. Take care to avoid loss of water from aggregate pores during surface-drying by completing the operation as quickly as possible. Immediately determine the mass of the test sample in the saturated surface-dry condition. Record this and all subsequent masses to at least the nearest gram.

(e) After determining the saturated-surface-dry mass place the test sample in the sample container and determine its mass in water at 23.0 ± 1.7 °C (73.4 ± 3.1 °F). Take care to remove all entrapped air before determining the mass, by shaking the container while immersed. The container shall be immersed to a depth sufficient to cover it and the test sample during mass determination.

(f) Dry the test sample to constant mass at a temperature of 110 ± 5 °C (230 ± 9 °F). Cool in air at room temperature 1 to 3 hours, or until the aggregate has cooled to a temperature that is comfortable to handle [approximately 50 °C (122 °F)] and determine the mass.

CALCULATIONS

5. (a) Calculate the bulk (O.D.) specific gravity as shown below:

(a) The specific gravity and absorption may be determined for coarse aggregates from different sources which have been composited in the desired proportions and thoroughly blended.

(b) The specific gravity and absorption of the coarse aggregate from each individual source may be determined and the combined specific gravity and absorption calculated as described in paragraphs (c) through (g) below. [Refer to the example given in paragraph (g) for an illustration of the procedure and calculations.] The same size of material, either plus 4.75 mm (No. 4) or plus 2.36 mm (No. 8), shall be used to determine the individual specific gravities and absorption for each of the different sources.

(c) For each individual material in the composite, its contribution to the total percent of coarse aggregate in the composite is determined and recorded to the nearest 0.01% as "IP":

$$IP = \frac{\begin{bmatrix}\text{Percent of}\\ \text{Individual Material}\\ \text{in Composite}\end{bmatrix} \times \begin{bmatrix}\text{Percent of Coarse}\\ \text{Aggregate in}\\ \text{Individual Material}\end{bmatrix}}{100}$$

Where: IP = Contribution by each individual material to the total percent of coarse aggregate in the composite.

(d) For each individual source, the percent of coarse aggregate in the composite is determined by summing the values for "IP" for that source, and recording the total as "P".

(e) The combined specific gravity is calculated by the following:

$$G = \frac{P1 + P2 + \ldots + Pn}{\frac{P1}{G1} + \frac{P2}{G2} + \ldots + \frac{Pn}{Gn}}$$

Where: P1, P2, ... Pn = For each individual source, the percent of coarse aggregate in the composite, "P".
G1, G2, ... Gn = The coarse specific gravity for each individual source.

(f) The combined absorption is calculated by the following:

$$\text{Combined Absorption} = \frac{\begin{bmatrix}\text{Combined Bulk}\\ \text{(SSD) Specific}\\ \text{Gravity}\end{bmatrix} - \begin{bmatrix}\text{Combined}\\ \text{Bulk (O.D.) Specific}\\ \text{Gravity}\end{bmatrix}}{\begin{bmatrix}\text{Combined Bulk (O.D.)}\\ \text{Specific Gravity}\end{bmatrix}}$$

(g) The following is an example of the procedure and calculations described in paragraphs (b) through (f) above. The example given is for a composite consisting of 26% coarse aggregate, 12% intermediate, and 47% fines from the primary source; with 15% blend from a secondary source. The coarse aggregate has 98% plus 4.75 mm (No. 4), the intermediate has 94% plus 4.75 mm (No. 4), the fines have 9% plus 4.75 mm (No. 4), and the blend has 24% plus 4.75 mm (No. 4).

Specific gravity and absorption for each of the different sources:

Primary Source (Coarse, Intermediate, Fine):

Bulk (O.D.) Specific Gravity = 2.549
Bulk (SSD) Specific Gravity = 2.586
Apparent Specific Gravity = 2.651
Absorption = 1.45%

Secondary Source (Blend):

Bulk (O.D.) Specific Gravity = 2.665
Bulk (SSD) Specific Gravity = 2.724
Apparent Specific Gravity = 2.781
Absorption = 2.21%

Determination of "IP" for individual materials, and "P" for individual sources, for the Primary Source (Coarse, Intermediate, Fine) and the Secondary Source (Blend):

Primary Source:

$$\text{"IP" Coarse} = \frac{(26) \times (98)}{100} = 25.48\%$$

$$\text{"IP" Intermediate} = \frac{(12) \times (94)}{100} = 11.28\%$$

$$\text{"IP" Fine} = \frac{(47) \times (9)}{100} = 4.23\%$$

"P" for Primary Source = 40.99%

Secondary Source:

$$\text{"IP" Blend} = \frac{(15) \times (24)}{100} = 3.60\%$$

"P" for Secondary Source = 3.60%

[P (Primary)] + [P (Secondary)] = 44.59%

$$\begin{bmatrix}\text{Combined}\\ \text{Bulk (O.D.)}\\ \text{Specific}\\ \text{Gravity}\end{bmatrix} = \frac{44.59}{\frac{40.99}{2.549} + \frac{3.60}{2.665}} = 2.558$$

$$\begin{bmatrix}\text{Combined}\\ \text{Bulk (SSD)}\\ \text{Specific}\\ \text{Gravity}\end{bmatrix} = \frac{44.59}{\frac{40.99}{2.586} + \frac{3.60}{2.724}} = 2.597$$

$$\begin{bmatrix}\text{Combined}\\ \text{Apparent}\\ \text{Specific}\\ \text{Gravity}\end{bmatrix} = \frac{44.59}{\frac{40.99}{2.651} + \frac{3.60}{2.781}} = 2.661$$

$$\begin{bmatrix}\text{Combined}\\ \text{Absorption}\end{bmatrix} = \frac{2.597 - 2.558}{2.558} \times 100 = 1.52\%$$

SPECIFIC GRAVITY AND ABSORPTION OF FINE AGGREGATE

(A Modification of AASHTO Designation T 84)

SCOPE

1. (a) This method covers the determination of specific gravity and absorption of fine aggregate. The specific gravity may be expressed as bulk oven dry (O.D.) specific gravity, bulk saturated surface dry (SSD) specific gravity, or apparent specific gravity.

(b) The specific gravity and absorption of fine aggregate is normally determined on pass No. 4 material. When the fine aggregate sample (pass No. 4) contains a substantial amount of passing No. 4 to retained No. 8 material, such as in mineral aggregate for asphaltic concrete friction course, the fine aggregate specific gravity and absorption shall be performed on pass No. 8 material. The fine aggregate specific gravity and absorption for mineral aggregates used in asphaltic concrete, other than asphaltic concrete friction course, shall be determined on pass No. 4 material. "Fine aggregate" as herein referenced will be either pass No. 4 or pass No. 8 material. Corresponding coarse aggregate specific gravity and absorption testing, utilizing the appropriate plus No. 4 or plus No. 8 material, shall be performed in accordance with Arizona Test Method 210.

(c) This test method may involve hazardous material, operations, or equipment. This test method does not purport to address all of the safety concerns associated with its use. It is the responsibility of the user to consult and establish appropriate safety and health practices and determine the applicability of any regulatory limitations prior to use.

(d) See Appendix A1 of the Materials Testing Manual for information regarding the procedure to be used for rounding numbers to the required degree of accuracy.

(e) When the specific gravity and absorption of the fine aggregate and the coarse aggregate are known, the combined aggregate specific gravity and absorption is determined, if necessary, utilizing Arizona Test Method 251.

APPARATUS

2. Requirements for the frequency of equipment calibration and verification are found in Appendix A3 of the Materials Testing Manual. Apparatus for this test procedure shall consist of the following:

(a) Balance - A balance capable of measuring the maximum weight to be determined and conforming to the requirements of AASHTO M 231, except the readability and sensitivity of any balance utilized shall be at least 0.1 gram.

(b) Pycnometer - A 500 mL volumetric flask into which the fine aggregate test sample can be readily introduced and in which the volume content can be reproduced within 0.2 mL. Figure 1 is an illustration of the type of flask that must be utilized. The volume of the flask filled to the mark shall be at least 50 percent greater than the space required to accommodate the test sample. If this requirement is not met for a particular aggregate, the normal sample size of 500 ± 10 grams may be reduced only enough to satisfy the requirement.

(c) Mold - A metal mold in the form of a frustum of a cone with dimensions as follows: 40 ± 3 mm inside diameter at the top, 90 ± 3 mm inside diameter at the bottom, and 75 ± 3 mm in height, with the metal having a minimum thickness of 0.8 mm (See Figure 2).

(d) Tamper - A metal tamper having a mass of 340 ± 15 grams, and having a flat circular tamping face 25 ± 3 mm in diameter (See Figure 2).

(e) Oven - Capable of maintaining a temperature of 230 ± 9 °F.

SAMPLING

3. Sample the aggregate in accordance with Arizona Test Method 105.

PREPARATION OF TEST SAMPLE

4. (a) Obtain a representative approximate 1200 gram test sample of the fine aggregate.

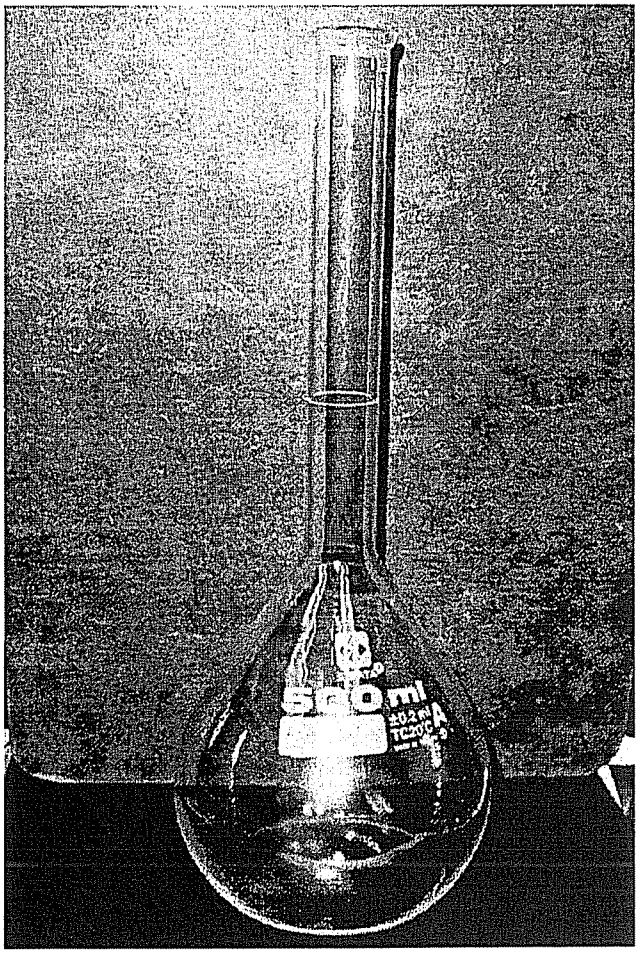

FIGURE 1

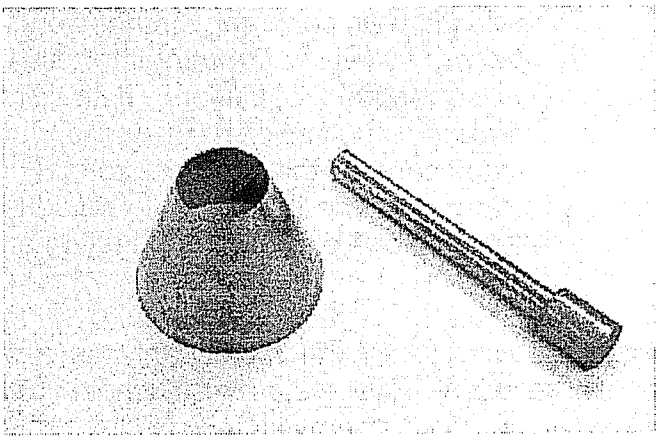

FIGURE 2

(b) Dry the test sample in a suitable pan or vessel to constant mass [see paragraph 4(c) below] at a temperature of 230 ± 9 °F. (Constant mass shall be determined as follows: Dry the sample for a minimum of 1 hour at 230 ± 9 °F. Record the weight of the sample to the nearest 0.1 gram. Continue drying and weighing until the weight does not change more than 0.1 gram at drying intervals of a minimum of 30 minutes.) Allow the sample to cool to comfortable handling temperature, cover with sufficient water to completely immerse it throughout the soaking period, and permit to stand for 15 to 19 hours.

(c) Where the absorption and specific gravity values are to be used in proportioning concrete mixtures in which the aggregates will be in their naturally moist condition, the requirement for initial drying to constant mass may be eliminated and, if the surfaces of the particles in the sample have been kept continuously wet until test, the 15 to 19 hour soaking may also be eliminated.

NOTE: Values for absorption and bulk (SSD) specific gravity may be significantly higher for aggregate not oven dried before soaking than for the same aggregate which has been dried and soaked as specified in paragraph 4(b).

(d) Decant excess water with care to avoid loss of fines, spread the sample on a flat nonabsorbent surface exposed to a gently moving current of ambient or warm air, and stir frequently to secure homogeneous drying. Continue stirring and drying until the sample approaches a free-flowing condition. As the material begins to dry sufficiently, it may be necessary to work it with the hands in a rubbing motion to break up any conglomerations, lumps, or balls of material that develop.

(e) Follow the procedure (cone test for surface moisture) given in paragraph 4(f) below to determine whether or not surface moisture is present on the fine aggregate particles. It is intended that the first trial will be made with some surface water in the sample. Continue drying with constant stirring, working the material with a hand-rubbing motion as necessary, and test at frequent intervals until the test indicates that the sample has reached a surface-dry condition. If the first trial of the surface moisture test indicates that moisture is not present on the surface, it has been dried past the saturated surface-dry condition. In this case, thoroughly mix a few milliliters of water with the fine aggregate and permit the specimen to stand in a covered container for 30 minutes. Then resume the process of drying and testing at frequent intervals for the onset of the surface-dry condition.

(f) With one hand, hold the mold firmly on a smooth nonabsorbent surface with the large diameter down. The mold must be held firmly in place throughout the process of filling the mold, tamping, and removal of excess material from around the base of the mold. With the other hand, place a portion of the partially dried fine

aggregate loosely in the mold, filling it until overflowing occurs, and heaping additional material above the top of the mold. Lightly tamp the fine aggregate into the mold with 25 light drops of the tamper. Each drop should start about 0.2 inch above the top surface of the fine aggregate. Permit the tamper to fall freely on each drop. Adjust the starting height to the new surface elevation after each drop and distribute the drops over the surface. Remove loose material from around the base of the mold, and lift the mold vertically. If surface moisture is still present, the fine aggregate will retain the molded shape. When the fine aggregate slumps slightly, it indicates that it has reached a surface-dry condition. Some angular fine aggregate or material with a high proportion of fines may not slump in the cone test upon reaching a surface-dry condition. This may be the case if fines become airborne upon dropping a handful of the sand from the cone test 4 to 6 inches onto a surface. For these materials, the saturated surface-dry condition should be considered as the point that one side of the fine aggregate slumps slightly upon removing the mold.

PROCEDURE

5. (a) The pycnometer which is to be used shall be calibrated prior to performing the test. The mass of the pycnometer filled to its calibration capacity with water at 73.4 ± 3.1 °F is determined and recorded to the nearest 0.1 gram. Prior to determining the mass of pycnometer filled with water to the calibration mark, the inside of neck of pycnometer just above calibration level shall be dried with a rolled up paper towel.

(b) Obtain a representative 500 ± 10 gram sample of the saturated surface-dry fine aggregate prepared as described in Section 4. Immediately determine and record the weight of the sample to the nearest 0.1 gram.

(c) Partially fill the calibrated pycnometer with water. Introduce the sample into the pycnometer and fill with additional water to approximately 90 percent of total capacity. Roll and agitate the pycnometer to eliminate all air bubbles. Rinse the inside of neck of pycnometer with water and add sufficient water to bring the water level in the pycnometer to its calibrated capacity. Adjust its temperature to 73.4 ± 3.1 °F, if necessary by immersion in circulating water. With a rolled up paper towel, dry the inside neck of pycnometer just above the calibration level. Determine and record the mass of the pycnometer, sample, and water to the nearest 0.1 gram.

NOTE: Adding a few drops of 99% grade isopropyl alcohol (ASTM D 770), after removal of air bubbles and just prior to bringing the water level to its calibrated capacity, has been found useful in dispersing foam on the water surface.

(d) Remove the fine aggregate from the pycnometer and dry to constant mass at a temperature of 230 ± 9 °F. (Constant mass shall be determined as follows: Dry the sample for a minimum of 1 hour at 230 ± 9 °F. Record the weight of the sample to the nearest 0.1 gram. Continue drying and weighing until the weight does not change more than 0.1 gram at drying intervals of a minimum of 30 minutes.) Cool in air at room temperature for 1.0 ± 0.5 hours. Determine and record the mass to the nearest 0.1 gram.

NOTE: In lieu of drying and weighing the sample which has been removed from the pycnometer, a second portion of the saturated surface dry sample may be used to determine the oven dry weight. This sample must be obtained at the same time and shall weigh within ± 0.2 grams of the sample which is introduced into the pycnometer.

CALCULATIONS

6. (a) Calculate the bulk (O.D.) specific gravity as shown below:

$$\text{Bulk (O.D.) Specific Gravity} = \frac{A}{(B + S - C)}$$

Where:
- A = mass of oven-dry test sample in air.
- B = mass of pycnometer filled with water to calibration mark.
- S = mass of saturated surface-dry test sample.
- C = mass of pycnometer with test sample and water to calibration mark.

(b) Calculate the bulk (SSD) specific gravity as shown below:

$$\text{Bulk (SSD) Specific Gravity} = \frac{S}{(B + S - C)}$$

(c) Calculate the apparent specific gravity as shown below:

$$\text{Apparent Specific Gravity} = \frac{A}{(B + A - C)}$$

(d) Calculate the percent absorption as shown below:

$$\text{Percent Absorption} = \frac{(S - A)}{A} \times 100$$

REPORT

7. (a) Report specific gravity results to the nearest 0.001, and indicate the type of specific gravity, whether bulk (O.D.), bulk (SSD), or apparent.

(b) Report the absorption result to the nearest 0.01%.

(c) If the specific gravity and absorption values were determined without first drying the aggregate, as permitted in paragraph 4(c), it shall be noted in the report. The source of the sample and the procedures used to prevent drying prior to testing shall also be reported.

(d) The size of the material tested shall be noted, i.e., minus No. 4 or minus No. 8.

PROCEDURE FOR DETERMINING COMBINED SPECIFIC GRAVITIES AND ABSORPTION FOR DIFFERENT SOURCES OF MATERIAL

8. Two methods are given below for determining the combined specific gravities and absorption for different sources of material, as described in paragraphs [8(a)] and [8(b) through 8(g)].

(a) The specific gravity and absorption may be determined for fine aggregates from different sources which have been composited in the desired proportions and thoroughly blended.

(b) The specific gravity and absorption of the fine aggregate from each individual source may be determined and the combined specific gravity and absorption calculated as described in paragraphs 8(c) through 8(f) below. [Refer to the example given in paragraph 8(g) for an illustration of the procedure and calculations.] The same size of material, either pass No. 4 or pass No. 8, shall be used to determine the individual specific gravities and absorption for each of the different sources.

(c) For each individual material in the composite, its contribution to the total percent of fine aggregate in the composite is determined and recorded to the nearest 0.01% as "IP":

$$IP = \frac{\left[\begin{array}{c}\text{Percent of}\\ \text{Individual Material}\\ \text{in Composite}\end{array}\right] \times \left[\begin{array}{c}\text{Percent of Fine}\\ \text{Aggregate in}\\ \text{Individual Material}\end{array}\right]}{100}$$

Where: IP = Contribution by each individual material to the total percent of fine aggregate in the composite.

(d) For each individual source, the percent of fine aggregate in the composite is determined by summing the values for "IP" for that source, and recording the total as "P".

(e) The combined specific gravity is calculated by the following:

$$G = \frac{P1 + P2 + \ldots + Pn}{\frac{P1}{G1} + \frac{P2}{G2} + \ldots + \frac{Pn}{Gn}}$$

Where: P1, P2, ... Pn = For each individual source, the percent of fine aggregate in the composite, "P".
G1, G2, ... Gn = The fine specific gravity for each individual source.

(f) The combined absorption is calculated by the following:

$$\text{Combined Absorption} = \frac{\left[\begin{array}{c}\text{Combined Bulk}\\ \text{(SSD) Specific}\\ \text{Gravity}\end{array}\right] - \left[\begin{array}{c}\text{Combined}\\ \text{Bulk (O.D.) Specific}\\ \text{Gravity}\end{array}\right]}{\left[\begin{array}{c}\text{Combined Bulk (O.D.)}\\ \text{Specific Gravity}\end{array}\right]}$$

(g) **The following is an example of the procedure and calculations described in paragraphs 8(b) through 8(f) above.** The example given is for a composite consisting of 26% coarse aggregate, 12% intermediate aggregate, and 47% fine aggregate from the primary source; with 15% aggregate from a secondary source. The coarse aggregate has 2% pass the No. 4 sieve, the intermediate aggregate has 6% pass the No. 4 sieve, the fine aggregate has 91% pass the No. 4 sieve, and the aggregate from the secondary source has 76% pass the No. 4 sieve.

Fine aggregate specific gravity and absorption for each of the different sources:

Primary Source (Coarse, Intermediate, Fine):

Bulk (O.D.) Specific Gravity = 2.576
Bulk (SSD) Specific Gravity = 2.611
Apparent Specific Gravity = 2.669
Absorption = 1.36%

Secondary Source:

Bulk (O.D.) Specific Gravity = 2.641
Bulk (SSD) Specific Gravity = 2.686
Apparent Specific Gravity = 2.764
Absorption = 1.70%

Determination of "IP" for individual materials, and "P" for individual sources:

<u>Primary Source (Coarse, Intermediate, Fine):</u>

$$\text{"IP" Coarse} = \frac{(26) \times (2)}{100} = 0.52\%$$

$$\text{"IP" Intermediate} = \frac{(12) \times (6)}{100} = 0.72\%$$

$$\text{"IP" Fine} = \frac{(47) \times (91)}{100} = 42.77\%$$

"P" for the Primary Source = IP (Coarse) + IP (Intermediate) + IP (Fine)

= (0.52%) + (0.72%) + (42.77%) = 44.01%

<u>Secondary Source:</u>

$$\text{"IP" (Secondary Source)} = \frac{(15) \times (76)}{100} = 11.40\%$$

"P" for Secondary Source = IP (Secondary Source) = 11.40%

Total fine aggregate in the composite = P(Primary Source) + P(Secondary Source)

= (44.01%) + (11.40%) = 55.41%

$$\begin{bmatrix}\text{Combined}\\ \text{Bulk (O.D.)}\\ \text{Specific}\\ \text{Gravity}\end{bmatrix} = \frac{55.41}{\frac{44.01}{2.576} + \frac{11.40}{2.641}} = 2.589$$

$$\begin{bmatrix}\text{Combined}\\ \text{Bulk (SSD)}\\ \text{Specific}\\ \text{Gravity}\end{bmatrix} = \frac{55.41}{\frac{44.01}{2.611} + \frac{11.40}{2.686}} = 2.626$$

$$\begin{bmatrix}\text{Combined}\\ \text{Apparent}\\ \text{Specific}\\ \text{Gravity}\end{bmatrix} = \frac{55.41}{\frac{44.01}{2.669} + \frac{11.40}{2.764}} = 2.688$$

$$\begin{bmatrix}\text{Combined}\\ \text{Absorption}\end{bmatrix} = \frac{2.626 - 2.589}{2.589} \times 100 = 1.43\%$$

PERCENTAGE OF FRACTURED COARSE AGGREGATE PARTICLES

(An Arizona Method)

SCOPE

1. (a) This test method describes the procedure for determining the percentage of fractured particles in coarse aggregate. This test procedure is performed on plus 2.36 mm (No. 8) and larger material, unless otherwise specified.

(b) When this test procedure is referenced for the determination of "crushed faces", such as in specifications or other test procedures, it shall be understood to be the determination of "fractured coarse aggregate particles".

(c) A fractured face is defined as an angular, broken surface of an aggregate particle created by crushing, by other artificial means, or by nature. A face is only considered fractured if it has sharp and well defined edges and the projected area of the fractured face is at least 25 percent of the maximum projected area of the aggregate particle visible considering the particle's outline at all possible orientations of the aggregate particle.

(d) This test method may involve hazardous material, operations, or equipment. This test method does not purport to address all of the safety concerns associated with its use. It is the responsibility of the user to consult and establish appropriate safety and health practices and determine the applicability of any regulatory limitations prior to use.

(e) See Appendix A1 of the Materials Testing Manual for information regarding the procedure to be used for rounding numbers to the required degree of accuracy.

(f) Metric (SI) units and values are shown in this test method with English units and values following in parentheses. Values given for metric and English units may be numerically equivalent (soft converted) for the associated units, or they may be given as rounded or rationalized values (hard converted). Either the metric or English units along with their corresponding values shall be used in accordance with applicable specifications. See Appendix A2 of the Materials Testing Manual for additional information on the metric system.

APPARATUS

2. Requirements for the frequency of equipment calibration and verification are found in Appendix A3 of the Materials Testing Manual. Apparatus for this test procedure shall consist of the following:

(a) A balance or scale capable of measuring the maximum weight to be determined and conforming to the requirements of AASHTO M 231, except the readability and sensitivity of any balance or scale utilized shall be at least 1 gram.

(b) A magnifying glass, preferably mounted on a stand and with a built-in light.

(c) Sieves conforming to AASHTO M 92, of sizes necessary for the material being tested.

(d) Miscellaneous pans, containers, spatulas, etc.

SAMPLE PREPARATION

3. A representative sample of the aggregate shall be obtained. The coarse aggregate test sample shall be proportionate for the gradation of the material being tested. The size of the test sample shall be such that it contains a minimum of 500 particles. It is not expected that an actual count of the number of particles be made to assure compliance with this requirement. It is required, however, that a reasonably accurate estimate be made to determine that the test sample contains at least 500 particles. Fractured face determination must be made on all particles in the test sample.

PROCEDURE

4. (a) Weigh the test sample, and record the weight to the nearest gram as "W_a". To facilitate the inspection of the particles, the test sample may be washed and dried to constant weight prior to determining the test sample weight.

(b) Spread the test sample onto a flat surface, and observe the aggregate particles under the magnifying glass with adequate light.

(c) If not otherwise specified, separate aggregate particles having at least one fractured face from those that are unfractured. If specifications require that a percentage of the aggregate particles having at least two fractured faces be

determined, separate aggregate particles having at least two fractured faces from those that have less than two fractured faces. A spatula or other blade-like tool may be helpful in separating particles.

(d) Weigh the portion of fractured particles, and record the weight to the nearest gram. If aggregate particles with at least one fractured face have been determined, record the weight as "W_f". If aggregate particles with at least two fractured faces have been determined, record the weight as "W_2".

CALCULATIONS

5. (a) If aggregate particles with at least one fractured face have been determined, calculate the percentage of fractured particles, "FF", and record to the nearest percent as shown below:

$$FF = \frac{W_f}{W_a} \times 100$$

Where: FF = Percentage of fractured particles with at least one fractured face.
W_f = Weight of fractured particles with at least one fractured face.
W_a = Weight of test sample.

(b) If aggregate particles with at least two fractured faces have been determined, calculate the percentage of fractured particles, "FF_2", and record to the nearest percent as shown below:

$$FF_2 = \frac{W_2}{W_a} \times 100$$

Where: FF_2 = Percentage of fractured particles with at least two fractured faces.
W_2 = Weight of fractured particles with at least two fractured faces.
W_a = Weight of test sample.

DETERMINATION OF CEMENT CONTENT REQUIRED FOR CEMENT TREATED MIXTURES

(A Modification of AASHO Designation T 144)

Scope

1. These methods of test are intended for determining the percentage of Portland Cement required for cement treatment of a cement treated mixture. The determination of the compressive strength of molded specimens at varying cement contents and the effect of cement content on the Atterburg Limits constitute the test information required for determining the required cement of cement treated mixtures, ARIZ 223.

Apparatus

2. (a) Mold. – A cylindrical metal mold having a capacity of 1/30 cubic foot with an internal diameter of 4.0 ±0.005 in. and a height of 4.584 ±0.005 in. It shall also be equipped with a detachable collar approximately 2½ in. in height.

(b) Rammer. – A metal rammer having a 2-in. diameter circular face and weighing 5.5 lbs. The rammer shall be equipped with a suitable arrangement to control the height of drop to a free fall of 12 in. above the elevation of the cement treated mixture.

(c) Balance. – A balance or scale of at least 4 kg. capacity, sensitive to 0.5 g.

(d) Drying Oven. – A thermostastically controlled drying oven capable of maintaining a temperature of 230° ±9° F (110° ±5° C).

(e) Straightedge. – A rigid steel straightedge 12 in. in length having one beveled edge.

(f) Sieves. – 3 in., ¾ in., and No. 4 sieves conforming to the requirements of the Specifications for Sieves for Testing Purposes (AASHO M 92).

(g) Miscellaneous mixing tools and pans.

(h) Speedy Moisture Tester (optional).

(i) Equipment required for determining the Liquid Limit and the Plastic Limit of Soils, ARIZ 206 and ARIZ 207, respectively.

(j) Equipment required as stated for Preparation of Specimens for Compression Test (ARIZ 300) and Compression Testing of Molded Concrete Cylinders (ARIZ 301).

Sample

3. (a) If the sample is damp when received, it shall be dried until it becomes friable under a trowel. Drying may be accomplished by air drying or by the use of drying apparatus such that the temperature of the sample does not exceed 140° F (60° C). Prepare the sample for testing by separating the aggregate retained on a No. 4 sieve and breaking up the remaining soil aggregations to pass the No. 4 sieve in a manner which will avoid reducing the natural size of individual particles.

(b) Select and prepare five separate test charges of approximately 4500 g., corresponding to the sieve analysis of the total sample, in accordance with the following procedure:

The material retained on the ½", ⅜", ¼", and No. 4

TABLE 1

Sieve No.	% Ret.	Adjusted % Ret.	Weight in g. (4500-g. charge)	Accumulative Total
2"	0			
2½"	2			
1"	3			
¾"	4	0		
½"	7	9 (7+2)	405	405
⅜"	6	8 (6+2)	360	765
¼"	9	12 (9+3)	540	1305
#4	6	8 (6+2)	360	1665
Pass #4	63	63	2835	4500
TOTAL	100	100	4500	

NOTE: *No change is made in the percentage of Pass No. 4 material (See ARIZ 226 the test for Moisture-Density Relations of Soils, Methods C & D, for explanation).*

sieves shall be stored separately. Aggregate retained on the ¾" sieve shall not be used, but its percentage shall be distributed proportionately among the sieves mentioned. An example of a coarse sieve analysis which requires adjusting to prepare test charges of 4500 g. is shown in Table I.

(c) Add the first of the cement contents to be used and mix thoroughly together.

(d) The moisture content to be added to each test charge is determined by making a maximum density-optimum moisture determination (ARIZ 226) with the anticipated required cement content and using this developed optimum-moisture thereafter for all specimens prepared.

Compaction

4. (a) Form a specimen by compacting the prepared mixture in the mold, with the collar attached, in three equal layers to give a total compacted depth of 5 in. Compact each layer by 25 uniformly distributed blows from the rammer dropping free from a height of 12 in. Following compaction, remove the extension collar, carefully trim the compacted mixture even with the top of the mold by means of the knife or straightedge, and weigh. Multiply the weight of the specimen (in g.) by 0.06614 to obtain the wet weight per cubic foot. The factor 0.06614 is valid only if the volume of the mold is 1/30 cubic foot. If calibration shows any change in volume, a new factor shall be calculated.

NOTE: *Assuming the mold has a volume of 1/30 (0.0333) cu. ft., the factor is derived as follows:*

$$.06614 = \frac{1}{0.0333 \text{ cu. ft.} \times 453.6 \text{ g./lb.}}$$

In the case of a change in volume, 0.0333 cu. ft. shall be replaced by the decimal fraction for the new volume.

(b) Compact a duplicate specimen in the same manner as 4.(a).

(c) Extrude both samples from their respective molds, place on glass plates, and store for curing in a moist condition.

(d) Determine the moisture content of the prepared sample from the residue in accordance with ARIZ 209, Moisture Content of Soil and Aggregates.

(e) Determine the dry weight per cu. ft. (see ARIZ. 225, Sec. 5 for details).

(f) Repeat the procedures in paragraph 4.(a), (b), (c), and (d) to additional samples with increased cement content in approximately 1% increments or in 2% increments if so desired, until a complete bracketing of the specification requirements is met.

Procedure

5. (a) All specimens must be cured in a moist condition for six days and then immersed for a period of 24 hours in water.

(b) Specimens shall then be prepared for the compression test by following ARIZ 300.

(c) Test the cylinders for compressive strength according to ARIZ 301.

(d) Remove the capping material from the broken cylinders and combine duplicate cylinders. Break up the material and allow to dry in air.

(e) Screen the dried material through a No. 4 sieve, making sure that all of the cement and fines are dislodged from the surface of the rock.

(f) Prepare a sample for a Plasticity Index determination, according to ARIZ 204.

Report

6. (a) Report the results in the following format (Table II):

Standard Specifications require that Class A Cement Treated Base shall have a compressive strength between 300 and 500 pounds per square inch at seven days. The test information indicates that in order to meet this requirement six percent cement by weight should be used.

NOTE: *If the intent of cement treatment was to reduce the Plasticity Index of the mixture (Class B, Cement Treated Base), then tests ARIZ 206 and ARIZ 207 should be performed on the original mixtures before the addition of cement and on the treated mixtures after the incorporation of cement.*

TABLE II

Cyl. No.	Dry Density lb. per cu. ft.	Cement %	Water %	Comp. Str. psi	Avg. psi	P.I.

Example:

Assume the test information as shown in Table III was obtained:

RESULTS OF CEMENT TREATED SPECIMENS PREPARED AT OPTIMUM MOISTURE

Cyl. No.	Density lbs. per cu. ft.	Cement %	H_2O %	7 Day Strength lbs. per sq. inch	Average lbs. per sq. inch
1	117	2	9.4	131	
2	117	2	9.5	135	133
3	118	4	9.5	235	
4	118	4	9.6	247	241
5	119	6	9.3	412	
6	119	6	9.5	394	403
7	120	8	9.5	613	
8	120	8	9.4	605	609

MOISTURE-DENSITY RELATIONS OF CEMENT TREATED MIXTURES

(A Modification of AASHO Designation T 134)

Scope

1. This method covers procedures for determining the relationship between moisture content and the density of cement treated mixtures when compacted at varying hydration curing times dependent on and consistent with construction operation procedures.

Apparatus and Procedure

2. (a) Mold. – A cylindrical metal mold having a capacity of 1/30 cu. ft. with an internal diameter of 4.0 ±0.005 in. and a height of 4.584 ±0.005 in. It shall be equipped with a detachable collar approximately 2½ in. high.

(b) Rammer. – A metal rammer having a 2-in. diameter circular face and weighing 5.5 lb. The rammer shall be equipped with a suitable arrangement to control the height of drop to a free fall of 12 in. above the elevation of the cement-treated mixture.

(c) Balances. – A balance or scale of at least 4 kg. capacity sensitive to 0.5 g.

(d) Drying Oven. – A thermostatically controlled drying oven capable of maintaining a temperature of 230° ±9° F (110° ± 5° C) for drying moisture samples.

(e) Straightedge. – A rigid steel straightedge 12 in. in length and having one beveled edge.

(f) Sieve. – No. 4 sieve conforming to the requirements of the Specifications for Sieves for Testing Purposes (AASHO M-92).

(g) Miscellaneous mixing tools and pans.

(h) Speedy Moisture Tester (optional).

Sample

3. (a) If the sample is damp when received, it shall be dried until it becomes friable under a trowel. Drying may be accomplished by air drying or by the use of drying apparatus such that the temperature of the sample does not exceed 140° F (60° C). Prepare the sample for testing by separating the aggregate retained on a No. 4 sieve and breaking up the remaining soil aggregations to pass the No. 4 sieve in such a manner as to avoid reducing the natural size of individual particles.

(b) Select and prepare five separate test specimens with the passing No. 4 fraction.

(c) Add to the prepared samples the required amount of cement as determined in ARIZ 220, Cement Content Required for Cement Treated Mixtures. If this has not yet been determined, an estimate shall be made and this amount added. If the results from ARIZ 220 indicate a cement content required of 6.0% based on total sample (plus and minus No. 4 fractions), use this same cement content, based on total weight, in setting up the specimens of only minus No. 4 material. Mix thoroughly to uniform color. Add sufficient water to dampen the mixture to approximately four to six percentage points below the optimum moisture content obtained from ARIZ 220, and mix thoroughly. Cover and allow to cure 5 minutes to aid dispersion of the moisture.

(d) Form a specimen by compacting the prepared mixture in the mold, with collar attached, in three equal layers to give a total compacted depth of about 5 in. Compact each layer by 25 uniformly distributed blows from the rammer dropping free from a height of 12 in. Following compaction, remove the extension collar, carefully trim the compacted mixture even with the top of the mold by means of the knife and straightedge, and weigh. Multiply the weight of the specimen (in g.) by 0.06614 to obtain the wet weight per cubic foot. The factor 0.06614 is valid only if the volume of the mold is 1/30 cu. ft. If calibration shows any change in volume, a new factor shall be calculated. (Note 1.)

NOTE 1: *Assuming the mold has a volume of 1/30 (0.0333) cu. ft., the factor is derived as follows:*

$$0.06614 = \frac{1}{0.0333 \text{ cu. ft.} \times 453.6 \text{ g./lb.}}$$

In the case of a change in volume, 0.0333 cu. ft. shall be replaced by the decimal fraction for the new volume.

(e) Remove the material from the mold and determine its moisture content in a convenient manner, being sure not to use less than 100 g. unless the Speedy Moisture Test is used (ARIZ 224).

(f) Repeat the procedures in paragraphs (c), (d), and (e), to samples increased in moisture content by approximately two percentage points. Continue this series of determinations until there is either a decrease or no change in wet weight per cubic foot of the compacted specimen.

(g) Calculations shall be made to determine the moisture content and corresponding oven-dry weight per cubic foot for each of the compacted samples. (An example of these calculations can be found in ARIZ 225, Maximum Density and Optimum Moisture of Soils – Method A.) The oven-dry weights per cubic foot of the specimens shall be plotted as ordinates and the corresponding moisture contents as abscissas. When the densities and corresponding moisture contents have been determined and plotted, it will be found that by connecting the plotted points with a smooth line a curve is produced. The moisture content corresponding to the peak of the curve shall be termed the "optimum moisture content". The oven-dry weight per cubic foot of the soil at optimum moisture content shall be termed "maximum density" under the above compaction. This curve shall be designated the "zero curing time curve."

(h) Repeat the procedures in paragraphs (c), (d), (e), (f), and (g) on samples allowed to cure prior to compaction for the following curing time periods: one hour, two hours, and four hours. (It will not be necessary to make a four-hour determination for all mixtures. This need should be established on an individual basis.) These separate determinations shall be used for developing a family of curves for use for compaction control with each curve designated according to its respective curing time. If it is determined that the **delay in compaction time** (i.e., the curing time between incorporation of the cement and compaction) will not vary throughout the project construction schedule, then the number of delayed compaction curves can be limited to only those applicable without running the complete family.

(i) The Rock Correction Procedure nomograph can be conveniently used for plotting the results of the maximum density determinations. See ARIZ 222 for Rock Correction Procedure.

ROCK CORRECTION PROCEDURE FOR MAXIMUM DENSITY DETERMINATION OF CEMENT TREATED MIXTURES

(An Arizona Method)

Scope

1. This method is to be used to determine the maximum density of the total sample of cement treated mixture for which the percentage of material retained on the No. 4 sieve has been determined as well as the maximum dry density of the passing No. 4 fraction and the bulk specific gravity of the plus No. 4 fraction. This test procedure is basically the same as ARIZ 227, Rock Correction Procedure for Maximum Density Determination, except for the addition of the concept of delay compaction time.

Procedure

2. The test is made in the following manner:

(a) Determine the maximum dry density of the material passing the No. 4 sieve by means of ARIZ 221, consistent with the desired curing time.

(b) Determine the percentage of rock (larger than the No. 4 sieve) in the total sample.

(c) Determine the bulk specific gravity of the rock in accordance with AASHTO T 85, on an oven-dried basis.

NOTE: *Once determined for a source, the specific gravity may usually be used for all rock corrections on material from that source. Any slight change in specific gravity should not change the maximum density to a large extent. (A change of ± 0.02 could result in a change of ± 0.6 lb. per cubic foot.) Similarly, the maximum dry density of the passing No. 4 material having been determined by Method A for a source may usually be used for that source providing the screen analysis of the passing No. 4 material and the Plasticity Index remain reasonably uniform.*

(d) Determine the maximum dry density of the total sample by use of the formula (e) or by use of the nomograph (f).

(e) Determination of density by use of formula:

$$D = \frac{(100 - R)\ d + (0.9\ RS \times 62.4)}{100}$$

$$= \frac{(100 - R)\ d + 56.2\ RS}{100}$$

Where:

D = Dry density of total sample containing R percent rock, lbs/cu. ft. (Varies according to curing time required.)

R = Percent of rock retained on No. 4 sieve.

d = Dry density of material passing No. 4 sieve, lbs./cu. ft.

S = Specific Gravity of rock.

Example:

R = 29% rock

d = 110.0 lbs. per cu. ft. (2 hour curing time.)

S = 2.50

$$D = \frac{(100 - 29)\ 110.0 + (56.2 \times 29 \times 2.50)}{100}$$

$$D = \frac{(71 \times 110.0) + 4074}{100}$$

$$D = \frac{7810 + 4074}{100} = 118.8 \text{ lbs. per cu. ft.}$$

D = 118.8 lbs. per cubic foot = Maximum density of total sample containing 29% rock retained on No. 4 sieve, with 2 hours allowed for sample to cure.

(f) Determination of density by use of nomograph: Use the nomograph shown in Fig. 1 following the instructions given. Data from the example above has been used to show methods for nomograph solutions.

Limitation of Method

3. The rock correction procedure is not accurate when the rock content (retained on No. 4 sieve) is in excess of 50% (or 60% in the case of uniformly graded rock which consists of 100% passing the 1 inch sieve), or when the material contains rock which will not pass a 3-inch sieve. If any of these conditions are present, the test should not be completed; however, the report should state that the test cannot be made due to excess rock, or large rock, and the sieve analysis reported to verify this. This limitation shall apply except for the case stated in Section 4.

Volcanic Cinders or Light Porous Material

4. The rock correction procedure is not accurate when the rock in the material consists of volcanic cinders or light weight porous material on which the specific gravity determination cannot be accurately made; for these materials, Methods C or D (ARIZ 226) shall be used.

Use of Results

5. The maximum density obtained by this method shall be used in comparison with the determination of the field density to determine the percentage of compaction.

ARIZONA DEPARTMENT OF TRANSPORTATION

MATERIALS SECTION

Rock Correction Procedure for Maximum Density Determination of Cement Treated Mixtures

$$D = \frac{(100-R)d + (56.2\,RS)}{100}$$

Where:
D = dry density of sample containing "R" percent rock, lb. per cu. ft.
R = percent rock (plus No. 4 material)
d = dry density of portion passing No. 4 sieve, lb. per cu. ft.
S = Bulk specific gravity of rock, oven dry basis.

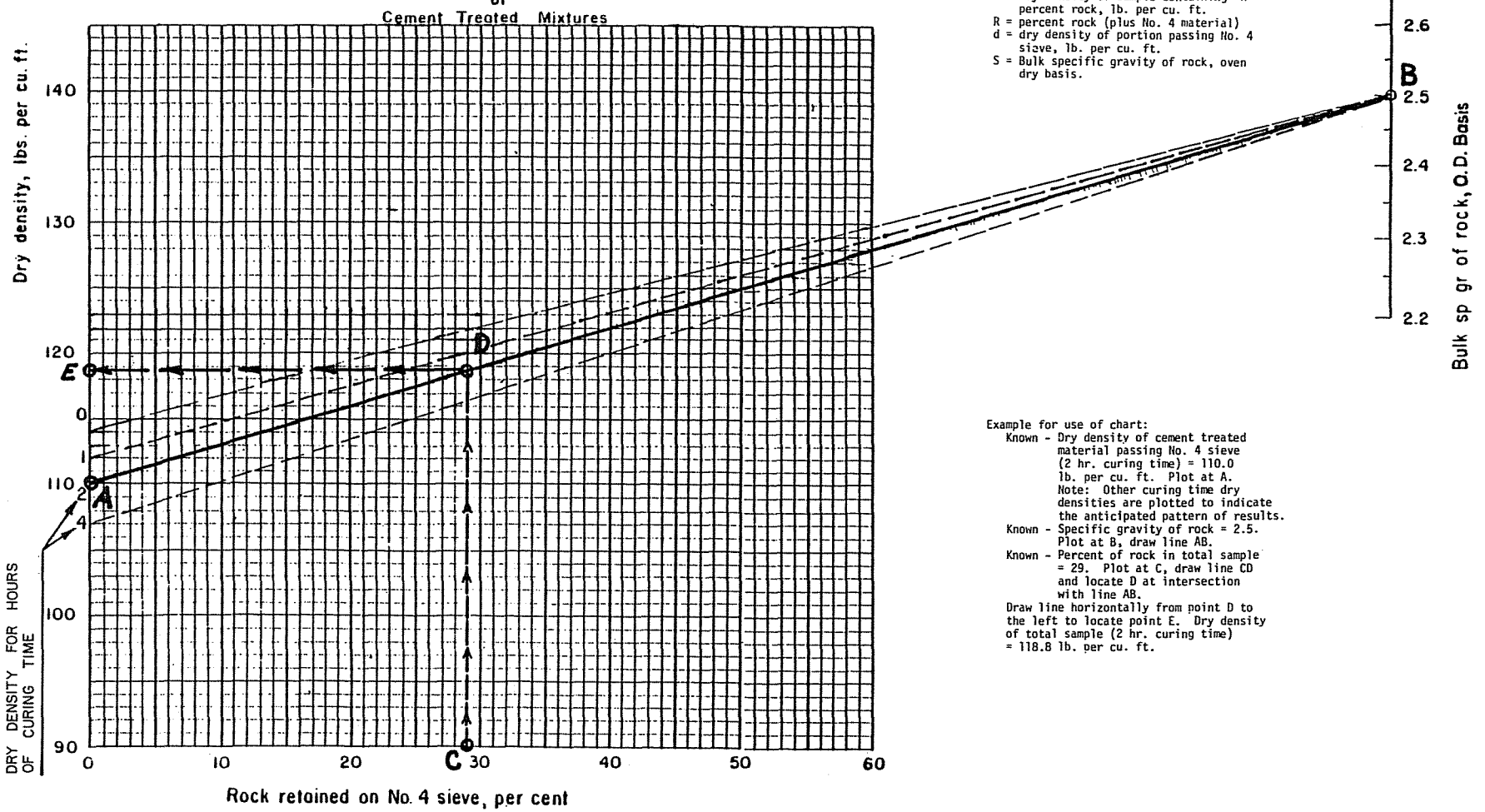

Example for use of chart:
Known - Dry density of cement treated material passing No. 4 sieve (2 hr. curing time) = 110.0 lb. per cu. ft. Plot at A. Note: Other curing time dry densities are plotted to indicate the anticipated pattern of results.
Known - Specific gravity of rock = 2.5. Plot at B, draw line AB.
Known - Percent of rock in total sample = 29. Plot at C, draw line CD and locate D at intersection with line AB.
Draw line horizontally from point D to the left to locate point E. Dry density of total sample (2 hr. curing time) = 118.8 lb. per cu. ft.

Figure 1.

FIELD DENSITY OF CEMENT TREATED MIXTURES BY SAND CONE METHOD OR BY RUBBER BALLOON METHOD

Scope

1. These methods are used to determine the in-place density of cement treated mixtures by determining the weight and moisture content of material removed from a test hole and subsequent measure of the test hole volume by either the Rubber Balloon Method (ARIZ 231) or the Sand Cone Method (ARIZ 230). Tests ARIZ 230 or 231 should be followed except for the differences outlined under **Procedures** below.

Procedures

1. Determine the time elapsed between the incorporation of cement and water to the mixture and the completion of compaction. This information is needed to refer to the proper Rock Correction Delayed **Curing** line (ARIZ 222).

2. If the rock content is greater than 50% (or 60% in the case of materials which are to consist of 100% passing the 1-inch sieve) report the sieve analysis with a note stating that the density is not determinable due to excess rock.

3. If any rock is retained on the 3-inch sieve, verify this with a sieve analysis and call this the end point. This sieve analysis shall be reported with a note stating that the density is not determinable due to the presence of rock retained on the 3-inch sieve.

MAXIMUM DRY DENSITY AND OPTIMUM MOISTURE OF SOILS BY METHOD A PROCTOR

(A Modification of AASHTO Designation T 99)

SCOPE

1. (a) This test method describes the procedure for determining the maximum dry density and optimum moisture content for a soil by the Method A Proctor Method. Some materials may be more appropriately tested by Arizona Test Method 245, "Maximum Dry Density and Optimum Moisture of Soils by Alternate Method D Proctor".

(b) Method A may be used for all maximum dry density and optimum moisture content determinations except for volcanic cinders or light porous material on which the specific gravity cannot be determined with consistency or when the moisture absorption for the coarse aggregate is greater than 4.0%.

(c) Method A may be used except when greater than 50% (60% for Aggregate Base) of the material is retained on the No. 4 sieve.

(d) An example is provided in Figure 3 for the calculations and determinations referenced herein.

(e) This test method may involve hazardous materials, operations, and equipment. This test method does not purport to address all of the safety problems associated with its use. It is the responsibility of whomever uses this test method to consult and establish appropriate safety and health practices and determine the applicability of regulatory limitations prior to use.

APPARATUS

2. The apparatus shall consist of the following:

(a) 4 inch proctor mold having a capacity of approximately 1/30 cubic foot, with an internal diameter of 4.000 plus 0.024 or minus 0.016 inches and a height of 4.584 plus 0.005 or minus 0.008 inches. The mold shall have a

nominal wall thickness of 1/4 inch. It shall be equipped with an extension collar approximately 2-3/8 inches high. A baseplate as shown in Figure 1 shall be provided.

(b) A hand or mechanical rammer weighing 5.50 $\pm$ 0.02 pounds, having a flat face, and equipped with a suitable arrangement to control the height of drop to a free fall of 12 $\pm$ 0.06 (1/16) inches above the elevation of the soil. The rammer face shall be circular with a diameter of 2.000 plus 0.010 or minus 0.015 inches. If a mechanical apparatus is used, it must be monitored through the ADOT proficiency sample program and maintain a rating of 3 or better based on the results of testing ADOT and AMRL proficiciency samples.

(c) Hardened-steel straightedge, at least 10 inches in length. It shall have one beveled edge, and at least one longitudinal surface (used for final trimming) shall be plane within 0.01 inch per 10 inches (0.1 percent) of length with the portion used for trimming the soil.

(d) Scale or balance capable of measuring the maximum weight to be determined, accurate to at least one gram.

(e) Scale or balance capable of measuring the maximum weight to be determined, accurate to at least 0.1 gram.

(f) Oven capable of maintaining a temperature of $230^{o} \pm 9^{o}$ F ($110^{o} \pm 5^{o}$ C).

(g) No. 4 and 3 inch sieves conforming to the requirements of AASHTO M 92.

(h) Miscellaneous mixing tools and pans.

(i) Sample Extruder (optional) consisting of a jack, lever, frame, or other device for extruding the compacted sample from the mold.

CALIBRATION OF MOLD

3. Molds shall be calibrated in accordance with APPENDIX A of this procedure.

SAMPLE

4. The sample shall be prepared as follows:

(a) Enough soil material shall be provided from the field to make five compacted specimens. A minimum sample size of 20,000 grams (approximately 45 lbs.) is normally required.

(b) If the soil sample is damp when received from the field, dry it until it becomes friable under a trowel. Drying may be in air or by use of a slow fan or other drying apparatus such that the temperature of the sample does not exceed 140° F.

(c) Thoroughly break up the aggregations in such a manner as to avoid reducing the natural size of individual particles.

(d) Weigh out an approximate 20,000 gram sample of representative soil. Record the weight of the sample, and sieve the material over a No. 4 sieve. If the percentage of coarse aggregate or rock retained on the No. 4 sieve is not already known from gradation testing, save any material retained on the No. 4 sieve and weigh. Calculate the percent of coarse aggregate or rock particles retained on the No. 4 sieve according to the following equation:

$$PR4 = \frac{WR4}{WT} \times 100$$

Where: PR4 = Percentage of coarse aggregate or rock particles retained on the No. 4 sieve

WR4 = Weight of coarse aggregate or rock particles retained on the No. 4 sieve

WT = Total weight of material sieved

(e) If "PR4" is greater than 50% (60% for Aggregate Base), Alternate Method D, Arizona Test Method 245, shall be used to determine the maximum dry density. If "PR4" is less than or equal to 50% (60% for Aggregate Base), blend material passing the No. 4 sieve thoroughly and proceed to Section 5 of this test method. If a specific gravity and absorption determination, in accordance with AASHTO T 85, is to be made for the plus No. 4 material, save an adequate amount of this material, otherwise, discard it.

PROCEDURE

5. Procedure to be used is as follows:

(a) From the thoroughly blended passing No. 4 material from paragraph 4(e), split out 5 representative approximate 2500 gram samples.

(b) Select one sample and thoroughly mix with sufficient water to dampen it to approximately three percentage points below optimum moisture content.

NOTE: If desired, an additional three samples may be mixed at this time with approximate moisture contents of 1% below optimum, 1% over optimum, and 3% over optimum. The moisture in each of these samples shall be retained by covering with a damp cloth or being sealed in air tight containers until they are compacted. One of the five samples should be retained for future use since it is necessary to have at least two points defined on each side of the moisture-density curve.

(c) Heavy clay soils or materials which tend to break down, or those in which it is difficult to incorporate water, shall require approximately 12 hours for uniform moisture absorption to be achieved. This shall be accomplished by preparing separate samples for each increment of water to be added, and then placing and sealing these samples in air tight containers for the 12-hour period.

(d) Form a specimen by compacting the prepared soil in the four inch mold (with extension collar attached) in three equal layers to give a total compacted depth of about 5 inches. Compact each layer with 25 uniformly distributed blows from the rammer, dropping free from a height of 12 inches. While each layer is being compacted, the remainder of material shall be in a pan covered by a damp cloth. During compaction, the mold shall rest firmly on a dense, uniform, rigid and stable foundation.

NOTE: Each of the following has been found to be a satisfactory base on which to rest the mold during compaction of the soil: A block of concrete, weighing not less than 200 lbs., supported by a stable foundation; a sound concrete floor; and for field application, such surfaces as found in concrete box culverts, bridges, and pavements.

(e) When compacting granular, free-draining materials, at moisture contents which are at or above optimum, the mold shall be prepared by first sealing the bottom of the mold with waterproofing grease. All excess grease shall be wiped from the mold and baseplate.

(f) Following compaction, carefully remove the extension collar. It may be necessary to use a follower to retain the soil in the mold while removing the collar to prevent damage or disturbance of the soil below the top of the mold. Carefully trim the compacted soil even with the top of the mold by means of the straightedge. If any voids are created during trimming, these shall be filled with fine material and smoothed off. Determine the weight of compacted specimen and mold. Determine the wet density, "WD", of the compacted soil by the following:

$$WD = \frac{M1 - M2}{VM \times 453.6 \text{ (grams/lb.)}}$$

Where: WD = Wet density of compacted soil, lb./cu. ft.
M1 = Weight of compacted specimen and mold, grams
M2 = Weight of the mold, grams
VM = Volume of the mold, cu. ft. (See Section 3 of this procedure.)

(g) The estimated dry density, "ED", of the compacted soil may be calculated and recorded to the nearest 0.1 lb./cu. ft. as follows:

$$ED = \frac{WD}{\text{(Approx. \% of water added)} + 100} \times 100$$

Where: ED = Estimated dry density of compacted soil, lb./cu. ft.
WD = Wet density of compacted soil, lb./cu. ft.

NOTE: These estimated densities are approximate only and will be corrected when final moisture results are obtained.

(h) The estimated dry density is useful in deciding how much water to add in later trial batches, if the procedure described in the note following paragraph 5(b), for initially preparing three additional samples with varing moisture contents is not utilized. By carefully observing the estimated dry density of the compacted samples, the operator should be able to vary the moisture content as the test proceeds so that when the final moisture-density results are plotted, a curve will result that rises to a peak and then falls away.

(i) Remove the material from the mold and slice vertically through the center. Take a representative minimum 300 gram sample from the full length and width of one of the cut faces. Weigh immediately, and dry to a constant weight in an oven at $230^{o} \pm 9^{o}$ F ($110^{o} \pm 5^{o}$ C) to determine the moisture content in accordance with AASHTO T 265. Record the weight of wet soil to the nearest 0.1 gram as "WW", and record the weight of oven dry soil to the nearest 0.1 gram as "DW".

(j) For granular, free-draining materials, the moisture content shall be determined using the entire compacted proctor specimen. Determine the weight of wet soil, "WW", by subtracting the weight of the mold, "M2", from the weight of compacted specimen and mold, "M1". Record the weight of wet soil, "WW", and the weight of oven dry soil, "DW", to at least the nearest gram. All clinging material shall be removed from the inside of the mold and included with the specimen. To facilitate drying, the specimen may be broken up and spread out in a large pan, being careful to not lose any soil particles.

(k) Select another of the samples which was split in paragraph 5(a), and if not already done, thoroughly mix with water in sufficient amount to increase the moisture content by approximately two percentage points.

(l) Repeat the procedure in paragraphs 5(c) through 5(j) for the sample at each moisture content, as necessary to establish a moisture-density curve which rises to a peak and then falls away.

CALCULATIONS

6. Calculate the percent moisture and dry density for each of the compacted soil samples as follows:

(a) Calculate percent moisture and record to the nearest 0.1 percent by the following:

$$\% \text{ Moisture} = \frac{WW - DW}{DW} \times 100$$

Where: WW = weight of wet soil, grams
DW = weight of oven dry soil, grams

(b) Calculate dry density and record to the nearest 0.1 lb./cu. ft. by the following:

$$DD = \frac{WD}{\% \text{ Moisture} + 100} \times 100$$

Where: DD = Dry density of compacted soil, lb./cu. ft.
WD = Wet density of compacted soil, lb./cu. ft.

MOISTURE-DENSITY RELATIONSHIP

7. The percent moisture and corresponding dry density for each of the compacted soil specimens shall be plotted on the graph provided on the proctor density test form shown in Figure 2. For a good plot, the majority of the graph is utilized. Normally, three increments on the horizontal axis shall equal one percent of moisture, and three increments on the vertical axis shall equal one lb./cu. ft. of dry density. If another number of increments other than three is utilized, the number of increments for one percent moisture and one lb./cu. ft. dry density shall always be the same.

(a) On each side of the maximum density curve, at least two points should be utilized to form two straight lines. The intersection point of these two lines defines the peak point of the density-moisture content relationship, or the maximum density and optimium moisture content for the soil. In general it will be found that higher unit mass soils assume steeper slopes with high maximum dry densities at low optimum moisture contents, while the lower unit mass soils assume flatter, more gently sloped lines with high optimum moisture contents and low maximum dry densities. Figure 4 gives examples of moisture-density plots which show the different slopes associated with different maximum dry density ranges.

(b) Optimum moisture content - The percent moisture content corresponding to the peak (intersection point of the two lines) of the moisture-density curve shall be termed the "optimum moisture content", and shall be reported as "OM" to the nearest 0.1 percent.

(c) Maximum dry density - The dry density at optimum moisture content corresponding to the peak (intersection point of the two lines) of the moisture-density curve shall be termed the "maximum dry density", and shall be reported as "MD" to the nearest 0.1 lb./cu. ft.

NOTE: The optimum moisture and maximum dry density determinations above are for the material passing the No. 4 sieve. When testing field samples for comparison to proctor optimum moisture and maximum dry density, a correction to the proctor optimum moisture and maximum dry density must be made, in accordance with ARIZ 227, for the percent rock which the field sample contains.

REPORT

8. Record the moisture and density data on the laboratory test form along with the laboratory number, material source and type, and other information required. A blank laboratory test form is provided in Figure 2.

APPENDIX A

CALIBRATION OF PROCTOR MOLDS

Proctor molds shall be calibrated as follows:

(a) Molds shall be calibrated at least once a year, or sooner if there is reason to question the accuracy of the calibration.

(b) Lightly coat the bottom of the mold with a waterproofing grease. (Dow Corning High Vacuum Grease, or similar, has proven satisfactory for this application.) For split molds, waterproofing grease is also necessary on the edges of the split mold halves which join together.

(c) Fit mold into baseplate and secure snugly into place.

(d) Wipe excess grease from the mold and the baseplate.

(e) Record weight of baseplate, empty mold, and glass plate to at least the nearest 0.1 gram.

Note: An example which illustrates the recording of calibration data and calculations is shown in Figure 5. Figure 6 is a blank calibration form.

(f) With the mold and baseplate assembly on a flat and level surface fill the mold with distilled water at room temperature.

(g) Determine and record the temperature of the water to the nearest one degree Fahrenheit, or to the nearest tenth of a degree Celsius.

(h) With a small rod, remove any air bubbles that may be clinging to the sides or bottom of the mold. Add additional water to completely fill the mold, using a glass plate in such a way to ensure accurate filling of the mold, eliminating air bubbles and excess water. Check bottom of mold to assure there is no leakage.

(i) Dry the base plate, glass and outside of mold with a dry, absorbent cloth. Care must be taken to not lose water from inside of mold during drying. Record weight of baseplate, mold filled with water, and glass plate to at least the nearest 0.1 gram.

APPENDIX A - (Continued)

(j) Determine the weight of water to fill mold by subtracting the weight of baseplate, empty mold, and glass plate from the weight of the baseplate, mold filled with water, and glass plate.

(k) For the temperature of the water, determine its corresponding unit weight from the table below, interpolating if necessary.

Temperature		Unit Weight of Water
Degrees (F)	Degrees (C)	lb./cu. ft.
65	18.3	62.337
70	21.1	62.302
75	23.9	62.261
80	26.7	62.216
85	29.4	62.168
90	32.2	62.113

(l) Calculate the volume of the mold, in cu. ft., as shown on the calibration form in Figures 5 and 6, and record to the nearest four decimal places.

(m) Thoroughly clean grease from the mold and base plate. On the mold, record the identification of the mold, the date of calibration, and the volume of the mold.

(n) Documentation of the calibration data shall be kept on file. Documentation shall include the following information:

1) Record of weights, temperatures, and calculations required in the calibration procedure.
2) Identification of mold.
3) Date of calibration.
4) Volume of the mold.
5) Operator performing calibration.
6) Supervisor check of calibration data.
7) Date of calibration expiration.

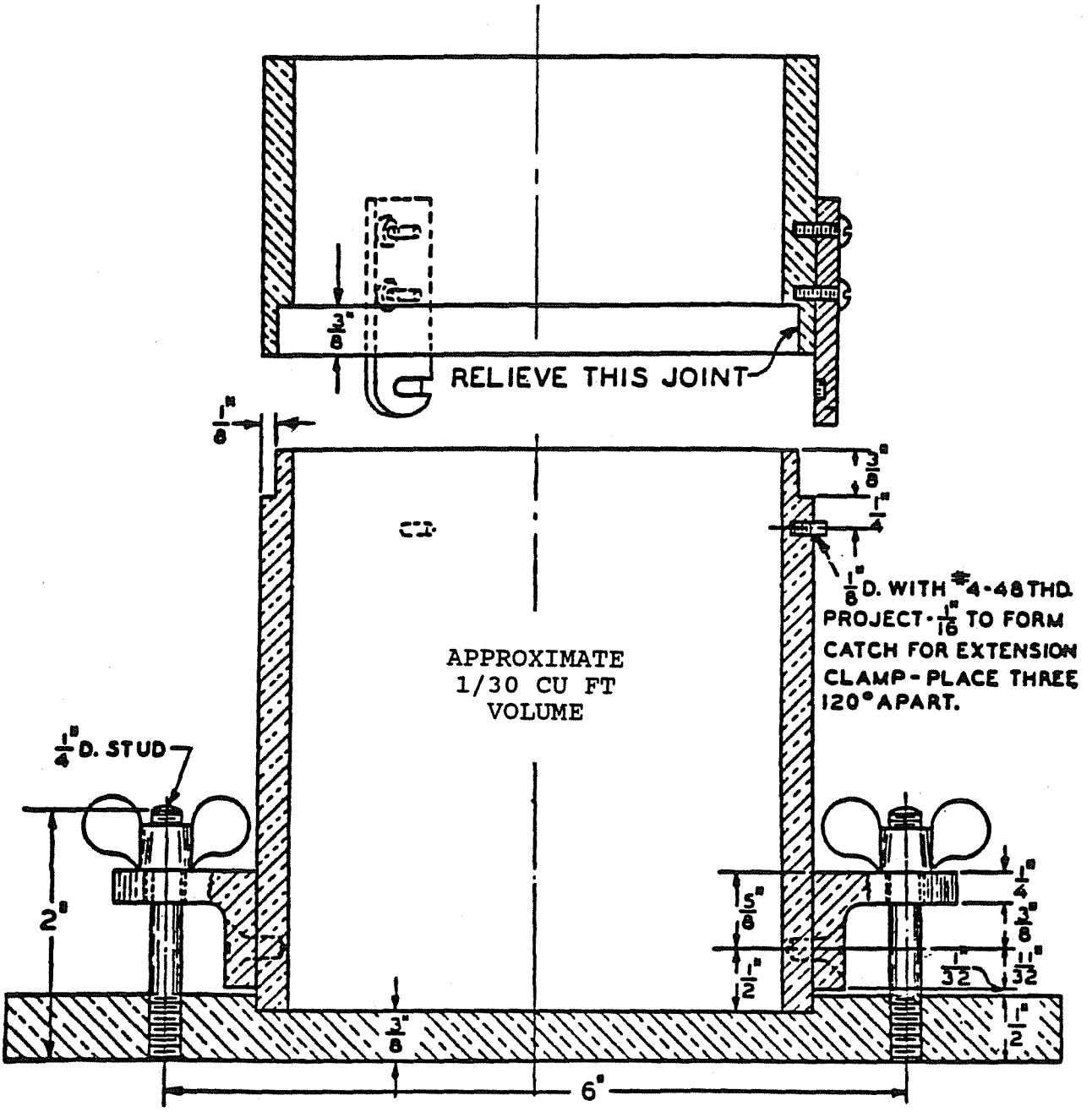

CYLINDRICAL MOLD, COLLAR,
AND BASEPLATE
(4 INCH MOLD)

FIGURE 1

Arizona Department of Transportation
METHOD A OR ALTERNATE METHOD D PROCTOR DENSITY
(Arizona Test Method 225 or 245)

Project No.: _____ Lab. No: _____ Rec'd Date: _____
Source and Type of Material: _____
Proctor Method Used: Method A _____ or Alternate Method D _____
Test Operator and Date: _____
Supervisor and Date: _____

Weight of Mold = M2 = grams | Volume of Mold = VM = cu ft | a = VM x 453.6 =

b	M1	c	WD	ED	Moisture Determination				DD
					WW	DW	d	e	
Approx % of Water Added	Wt. of Sample and Mold	Wet Wt. of Sample M1 - M2	Wet Density lb/cu ft $\frac{c}{a}$	Est. Dry Density $\frac{WD \times 100}{b + 100}$	Wet Wt. of Moisture Sample	Dry Wt. of Moisture Sample	Wt. of Water WW - DW	Percent Moisture $\frac{d \times 100}{DW}$	Dry Density lb/cu ft $\frac{WD \times 100}{e + 100}$

METHOD A

WT = _____ WR4 = _____

$PR4 = \frac{WR4}{WT} \times 100 =$ _____%

ALTERNATE METHOD D

WT = _____ WR3/4 = _____

$PR3/4 = \frac{WR3/4}{WT} \times 100 =$ _____%

Coarse Aggregate
Bulk Oven Dry
Specific Gravity: _____

Coarse Aggregate
Absorption: _____%

OPTIMUM MOISTURE
CONTENT = OM = _____%

MAXIMUM DRY DENSITY
(lb./cu. ft.) = MD = _____

Dry Density lb./cu. ft.

Percent Moisture

REMARKS: _____

44-1002 10/92

FIGURE 2

Arizona Department of Transportation
METHOD A OR ALTERNATE METHOD D PROCTOR DENSITY
(Arizona Test Method 225 or 245)

Project No.: _____ Lab. No: _____ Rec'd Date: _____
Source and Type of Material: _____
Proctor Method Used: Method A ✓ or Alternate Method D _____
Test Operator and Date: _____
Supervisor and Date: _____

Weight of Mold = M2 = 1970 grams | Volume of Mold = VM = 0.0336 cu ft | a = VM x 453.6 = 15.2410

b	M1	c	WD	ED	Moisture Determination				DD
					WW	DW	d	e	
Approx % of Water Added	Wt. of Sample and Mold	Wet Wt. of Sample M1 - M2	Wet Density lb/cu ft c / a	Est. Dry Density WD x 100 / b + 100	Wet Wt. of Moisture Sample	Dry Wt. of Moisture Sample	Wt. of Water WW - DW	Percent Moisture d x 100 / DW	Dry Density lb/cu ft WD x 100 / e + 100
11	3884	1914	125.6	113.2	354.6	318.9	35.7	11.2	112.9
13	3955	1985	130.2	115.2	320.1	283.8	36.3	12.8	115.4
15	3995	2025	132.9	115.6	410.6	356.7	53.9	15.1	115.5
17	3986	2016	132.3	113.1	344.6	293.8	50.8	17.3	112.8

METHOD A

WT = 21556 WR4 = 4462

PR4 = WR4 / WT x 100 = 21 %

ALTERNATE METHOD D

WT = _____ WR3/4 = _____

PR3/4 = WR3/4 / WT x 100 = _____ %

Coarse Aggregate Bulk Oven Dry Specific Gravity: 2.476

Coarse Aggregate Absorption: 1.83 %

OPTIMUM MOISTURE CONTENT = OM = 13.9 %

MAXIMUM DRY DENSITY (lb./cu. ft.) = MD = 117.1

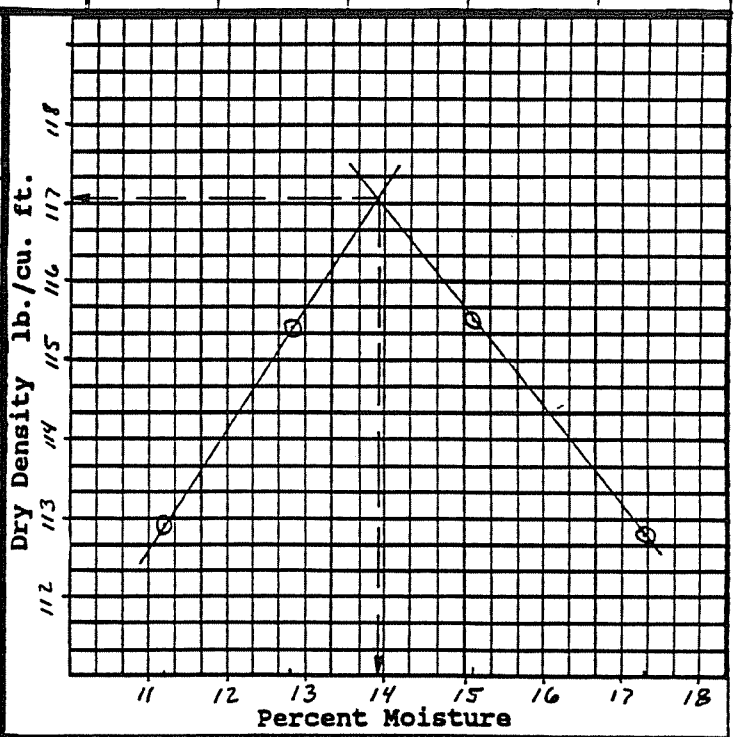

REMARKS: _____

44-1002 10/92

FIGURE 3

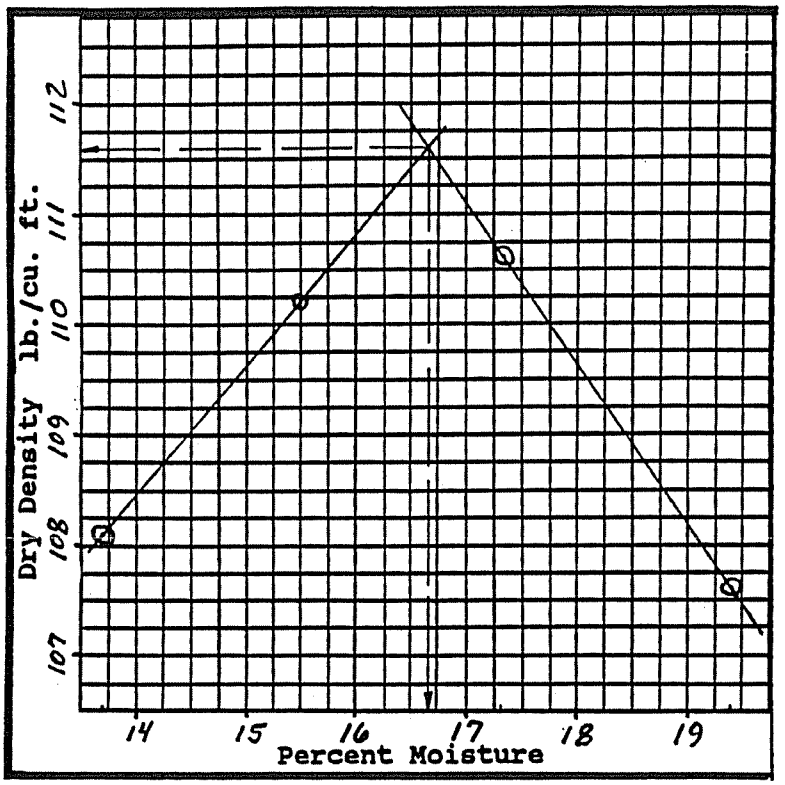

CLAYEY SAND

% Moisture	Dry Density
13.7	108.1
15.5	110.2
17.3	110.6
19.4	107.6

Maximum Density = 111.6 lb/cu ft
Optimum Moisture = 16.7%

FINE CLAY

% Moisture	Dry Density
21.2	94.5
22.3	95.8
25.2	95.1
27.8	93.1

Maximum Density = 96.7 lb/cu ft
Optimum Moisture = 23.1%

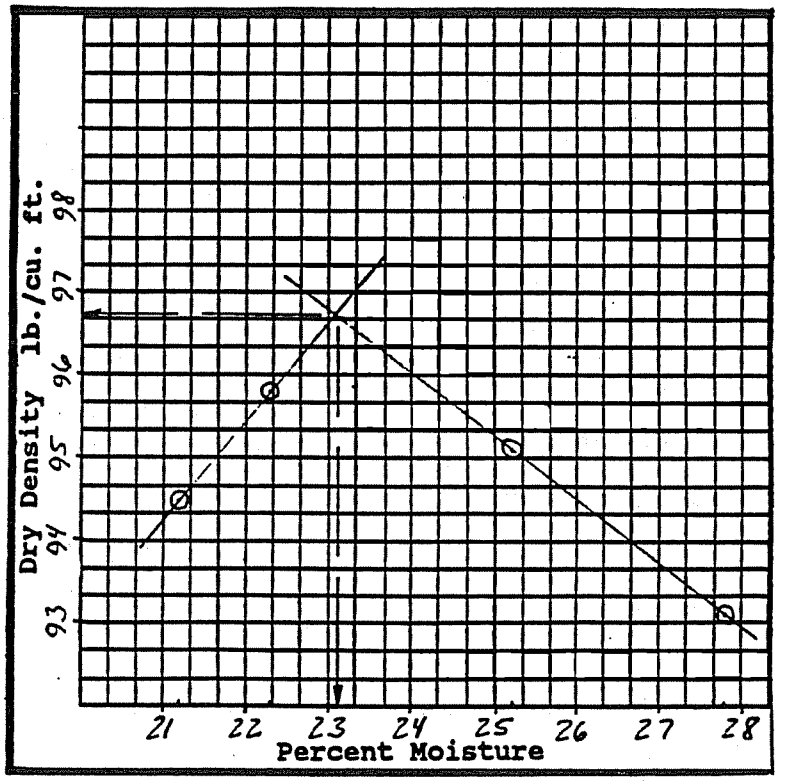

EXAMPLE PROCTOR DENSITY CURVES

FIGURE 4

CALIBRATION OF PROCTOR MOLD

✓ Four Inch Mold ___ Six Inch Mold

Mold I.D. #: _____
Temperature of Water Used for Calibration: 73°F
Unit Weight of Water: 62.277 lb./cu. ft.

Weight of Baseplate, Empty Mold, and Glass Plate (grams)	Weight of Baseplate, Mold Filled with Water, and Glass Plate (grams)	Weight of Water to Fill Mold (grams)
4458.7	5407.9	949.2

$$\left[\text{Volume of Mold (cu. ft.)}\right] = \frac{\text{Weight of Water to Fill Mold (grams)}}{\left[\text{Unit Weight of Water (lb./cu. ft.)}\right] \times \left[453.6 \text{ (grams/lb.)}\right]}$$

$$= \frac{(949.2)}{(62.277) \times (453.6)} = 0.0336 \text{ cu. ft.}$$

REMARKS: _____

Calibration Date: _____
Test Operator: _____
Supervisor and Date: _____
Calibration Expiration Date: _____

FIGURE 5

CALIBRATION OF PROCTOR MOLD

___ Four Inch Mold ___ Six Inch Mold

Mold I.D. #: _____
Temperature of Water Used for Calibration: _____
Unit Weight of Water: _____ lb./cu. ft.

Weight of Baseplate, Empty Mold, and Glass Plate (grams)	Weight of Baseplate, Mold Filled with Water, and Glass Plate (grams)	Weight of Water to Fill Mold (grams)

$$\left[\text{Volume of Mold (cu. ft.)}\right] = \frac{\text{Weight of Water to Fill Mold (grams)}}{\left[\text{Unit Weight of Water (lb./cu. ft.)}\right] \times \left[453.6 \text{ (grams/lb.)}\right]}$$

$$= \frac{(\qquad)}{(\qquad) \times (453.6)} = \underline{\qquad\qquad} \text{ cu. ft.}$$

REMARKS: _____

Calibration Date: _____
Test Operator: _____
Supervisor and Date: _____
Calibration Expiration Date: _____

FIGURE 6

MAXIMUM DENSITY AND OPTIMUM MOISTURE OF SOILS METHODS C & D

(A Modification of AASHO T 99, Methods C & D)

Scope

1. **Method C** shall be used only on volcanic cinders and light porous material containing less than 50% of material retained on the No. 4 sieve.

Method D shall be used only on volcanic cinders and light porous materials containing more than 50% and less than 60% of material retained on the No. 4 sieve. If the material contains more than 60% retained on the No. 4 sieve, report the sieve analysis with a note stating the density is not determinable due to excess material retained on the No. 4 sieve.

Apparatus

2. The apparatus shall consist of the following:

(a) 4.0-in. proctor mold (for Method C) having a capacity of 1/30 (.0333) cu. ft. with internal diameter of 4.0 ±.005 in. and a height of 4.584 ±.005 in.

(b) 6.0-in. proctor mold (for Method D) having a capacity of 1/13.33 (0.075) cu. ft., with internal diameter of 6.0 ±0.005 in. and a height of 4.584 ±0.005 in. (See Fig. 1.)

(c) A hand rammer or mechanical compactor of 2-in. diameter, having a flat circular face and weighing 5.5 lb.

(d) Steel straightedge 12" or longer, having one beveled edge.

(e) Balance, capacity 20 kg. sensitive to 1 g.

(f) Drying oven, operating range 110° ±5° C.

(g) Miscellaneous mixing tools and pans.

Sample

3. Enough material should be on hand to make five compacted samples.

Approximately 13,000 g. for Method C.

Approximately 25,000 g. for Method D.

(These weights may have to be adjusted depending on the type of material.)

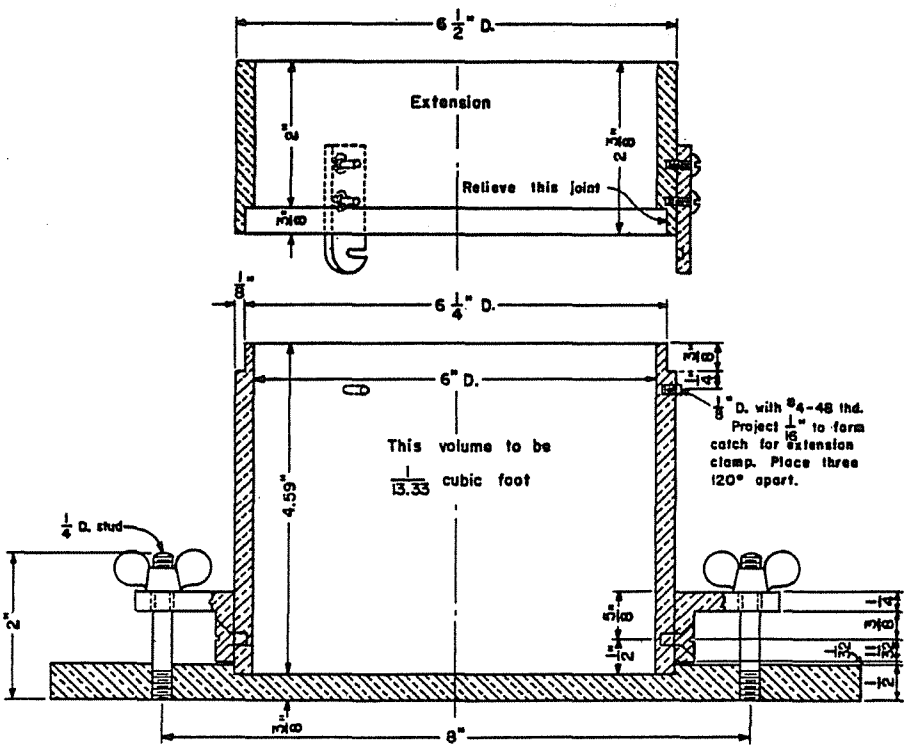

FIGURE 1
Cylindrical Mold, 6.0-in., for Soil Tests

(a) A sieve analysis, (ARIZ 201 and 203) must be run to determine the proportion of rock.

Samples which contain approximately 100% passing the ¾" sieve shall be prepared in accordance with the folowing procedure:

A uniform sample of approximately 15,000 g. so as to obtain not less than five compaction samples or test charges, shall be used. The sample shall be separated by means of a mechanical sample splitter into equal portions of approximately the desired weight. With some practice the charges can be obtained by using **only** the splitter. The operator shall not add to or take away from any portion by scooping with the hand or other means, as this may cause segregation.

(b) Samples containing rock retained on the ¾" sieve shall be processed in the following manner:

The material retained on the ½", ⅜", ¼", and No. 4 sieves shall be stored in separate containers during the sieve analysis procedure. Rock retained on the ¾" sieve shall not be used, but its percentage shall be distributed proportionately among the sieves mentioned above. Table I shows a coarse sieve analysis which required adjusting, shows the adjusted percentages, and also shows the material to build up a 2200 g. charge. Essentially the same procedure shall be followed to build a 5000 g. charge in the case of Method D. These weights may require adjustment if the charge is too large.

(c) The adjusted % retained values are found by dividing each of the percentages retained on the ½", ⅜", ¼" and No. 4 (from Table I), by the total percentage of material coarser than No. 4, x 10, and adding these quotients to the respective sieves below the ¾", i.e., $7 \div 36 = 1.9 = 2$; $8 \div 36 = 2.2 = 2$; and $12 \div 36 = 3.3 = 3$. The final correction should total 100%.

(d) Use the "adjusted % Ret." values to build up the compaction charges of 2200 g. each, i.e.,

$$\frac{2200 \times 9}{100} = 198 \text{ g. of } ½"$$

rock needed (Table I). The accumulative total is for weighing the charge as follows:

1. Weigh out the first size (½") into the balance scoop (198 g. in Table I), then set the weights at 374 g. (198 + 176) and add the ⅜" rock until the instrument balances. Next set the weights at 638 g., (374 + 264) and add the ¼" rock until the instrument again comes to balance. Continue in this manner until the charge weighing 2200 g. is built up. Weigh out 5 such charges and save them in separate pans.

Mixing

4. The amount of water that will be required for a sample is variable and requires some experience on the part of operator, but the following general rule may be of help. Add 4% water to the sample and mix thoroughly; when mixing is complete, pick up a handful of dirt and squeeze it, then open the hand, let the dirt fall, and immediately blow the breath upon the open hand. If the hand feels cool, but not cold, another 2% water shall be added, thoroughly mixed, and the squeeze and blow test repeated. Continue to add 2% portions of water, and check, until the feeling of coolness changes to cold. At this point, gather the material into a compact pile and cover it with a slightly damp cloth to inhibit drying. Record the total percentage of water added.

Compaction

5. Compact the material as follows:

(a) Place approximately ⅓ of the mixed material in the mold, moving the scoop around the top of the mold to insure even distribution of the material. Tamp the material lightly with the end of the hand rammer,

TABLE 1

Sieve No.	% Ret.	Adjusted % Ret.	Wt. in Grams (2200 gram sample)	Accumulative Total
2"	0			
1½"	2			
1"	3			
¾"	4	0		
½"	7	9 (7+2)	198	198
⅜"	6	8 (6+2)	176	374
¼"	9	12 (9+3)	264	638
#4	6	8 (6+2)	176	814
Pass #4	63	63	1386	2200
TOTAL	100	100	2200	

NOTE: *No change is made in the percentage of pass No. 4 material; this is always used at the same percentage in which it occurred in the original sample.*

or with the knuckles if the mechanical rammer is used.

(b) Compact this first layer with the rammer falling through a distance of 12 inches, moving the rammer to a different place each time so the whole surface is covered.

Method "C" requires 25 blows per layer.

Method "D" requires 56 blows per layer.

(c) Add another ⅓ portion of the dampened material and compact it as before.

(d) Add and compact the third and final layer. This last layer, when compacted, should extend up into the extension collar a short distance.

(e) Place the mold in the mixing pan and remove the collar so as to not crack or crumble the compacted specimen, then strike off the top of the specimen even with the top of the mold, using the steel straightedge. If any holes are left as rocks are scraped out, these holes shall be filled with fine material and smoothed off.

Calculations

6. The samples are weighed and calculations are as follows:

(a) Remove the base, wipe away any dirt from the mold and weigh the sample and mold to the nearest gram. Record the weight on the work card.

(b) Subtract the weight of the mold to obtain the wet weight of the sample in grams.

(c) Calculate the wet Density (D_w) in pounds per cu. ft. as follows:

Method C

$$D_w = \text{wet wt. x } 0.06614$$
$$= 1607 \text{ g. x } 0.06614 = 106.3 \text{ lb./cu. ft.}$$

$$\text{Where } 0.06614 = \frac{1}{\text{Vol. of 4" mold x 453.6 g./lb.}}$$

Method D

$$D_w = \text{wet wt. x } 0.02939$$
$$= 3617 \text{ g. x } 0.02939 = 106.3 \text{ lb./cu. ft.}$$

$$\text{Where } 0.02939 = \frac{1}{\text{Vol. of 6" mold x 453.6 g./lb.}}$$

(d) The approximate dry density of the sample (D_a) may be calculated as follows:

$$D_a = \frac{D_w}{100 + \%\text{ water added}} \text{ x } 100$$

Example:

Wet Density, D_w = 106.3 lb./cu. ft.
% Water added = 14

$$D_a = \frac{106.3}{114} \text{ x } 100 = 93.2 \text{ lb./cu. ft.}$$

NOTE: *These densities are approximate only and will be corrected when final moisture results are obtained.*

The approximate dry density is useful in deciding how much water to add in later trial batches. For instance, if the 14% water in the example, shown on the previous page, gave a density of 93.2 lb. per cu. ft., and a later increase to 16% gave the same density of 93.2 lb. per cu. ft., then the next trial to be run should be dropped to 12% water. (This was tried and resulted in a compaction of 92.1 lb. per cu. ft., giving a curve which rose from 12% to 14% and fell away at 16%.) One or two additional samples with either 10% or 18% water added should be compacted, to aid in establishing the curve. By carefully observing the approximate dry density of the compacted samples, the operator should be able to vary the moisture content as the test proceeds so that when the final results are plotted a curve will result that rises to a peak and then recedes.

Moisture Determination

7. The percentage of moisture in the compacted samples is determined as follows:

(a) Break the compacted sample into small pieces, being careful to **lose none.** Dry the sample in an oven at 110° ±5° C to constant weight, and record the weight.

NOTE: *The "Speedy" Method is not applicable for moisture determinations.*

(b) Calculate the moisture content as follows:

$$\%\text{ Moisture} = \frac{W_w - W_d}{W_d} \text{ x } 100$$

Where:

W_w = weight of wet soil, g.
W_d = weight of dry soil, g.

Example:

$$\%\text{ Moisture} = \frac{322 \text{ g.} - 286 \text{ g.}}{286 \text{ g.} - 22 \text{ g.}} \text{ x } 100$$

$$= \frac{36 \text{ g.}}{264 \text{ g.}} \text{ x } 100 = 13.6\%$$

(c) The dry density in lb. per cu. ft. for each sample is calculated as follows:

$$D = \frac{D_w}{100 + \%\ \text{moisture}} \times 100$$

Where:

D = dry density of soil, lb./cu. ft.
D_w = wet density of soil, lb./cu. ft.

Example:

$$D = \frac{106.3\ \text{lb./cu. ft.}}{113.6} \times 100 = 93.6\ \text{lb./cu. ft.}$$

Maximum Density and Optimum Moisture

8. The optimum moisture is determined as follows:

(a) The results of all samples are plotted on graph paper, using the percentage of moisture as the horizontal axis and the dry weight per cubic foot as the vertical axis.

(b) Draw a curve through the resulting points. The peak of the curve represents the "Maximum Density", in pounds per cubic foot, and the percentage of water at the peak represents the "Optimum Moisture Content" necessary to produce maximum density when compacted under these conditions.

Figure 2 gives a typical example of the calculations involved.

METHOD "C & D" PROCTOR

EXAMPLE OF CALCULATIONS FOR ARIZ-226

a	b	c	d	e	f	g	h	i
Approx. % Water Added	Wet Weight of Mold & Soil (gm	Weight of Mold (gm.)	Wet weight of Soil (gm.)	Factor	Wet Density lb./cu. ft.	Approx. Dry Density lb./cu.ft.	Actual % Water Added	Actual Dry Density lb./cu.ft.
			(b-c) = d		(dxe) = f	$\frac{f}{100+a} \times 100 = g$	(From Moisture Chart Below)	$\frac{f}{100+h} \times 100 = i$
10	3335	1820	1515	0.06614	100.2	91.1	10.3	90.8
12	3380	1820	1560	0.06614	103.2	92.1	11.9	92.2
14	3427	1820	1607	0.06614	106.3	93.2	13.6	93.6
16	3455	1820	1635	0.06614	108.1	93.2	16.2	93.0
18	3453	1820	1633	0.06614	108.0	91.5	18.1	91.4
			(Factor for Method "D" = 0.02939)					

MOISTURE CHART

a	j	k	l	h
Approx. % Water Added	Wet Weight (gm.)	Dry Weight (gm.)	Weight Water (j-k)=l	% Water Added $\frac{l}{k} \times 100 = h$
10	300	272	28	10.3
12	300	268	32	11.9
14	300	264	36	13.6
16	300	258	42	16.2
18	300	254	46	18.1

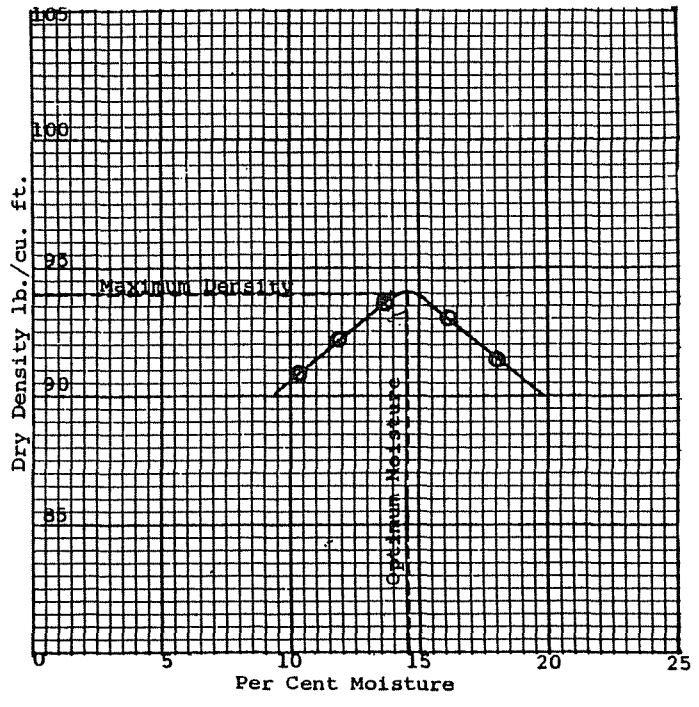

Fig. 2.

ROCK CORRECTION PROCEDURE FOR MAXIMUM DRY DENSITY AND OPTIMUM MOISTURE CONTENT DETERMINATION

(A Modification of AASHTO Designation T 224)

SCOPE

1. This procedure is used to determine the corrected maximum dry density and optimum moisture content for a sample of material when coarse aggregate or rock particles are retained on the No. 4 sieve (for Method A proctor) or 3/4 inch sieve (for Alternate Method D proctor).

(a) The rock correction procedure shall not be used when the material consists of volcanic cinders or light weight porous material on which the specific gravity cannot be determined with consistency or when the moisture absorption for the coarse aggregate is greater than 4.0%.

(b) The rock correction procedure shall not be used when the percent rock retained on the No. 4 for Method A is less than 10% or greater than 50% (greater than 60% in the case of an aggregate base material); or when the percent rock retained on the 3/4 inch sieve for Alternate Method D is less than 10% or greater than 50%.

NECESSARY INFORMATION

2. (a) Refer to, or determine the maximum dry density and optimum moisture content of the material by Method A (Arizona Test Method 225 or 232); or Alternate Method D (Arizona Test Method 245 or 246).

(b) For Method A, the percentage of rock particles in the sample which are coarser than the No. 4 sieve is recorded as "PR4". For Alternate Method D, the percentage of rock particles in the sample which are coarser than the 3/4 inch sieve is recorded as "PR3/4".

(c) If not known, determine the bulk oven-dry specific gravity of the coarse aggregate in accordance with AASHTO T 85.

NOTE: Once determined for a source, the specific gravity may usually be used for all rock corrections on material from that source. Any slight change in specific gravity

should not change the maximum dry density to a large extent. (A change of ± 0.02 could result in a change of ± 0.6 lb. per cubic foot.) Similarly, the maximum dry density of the passing No. 4 or passing 3/4 inch material, having been determined by Method A or Alternate Method D for a source, may usually be used for that source providing the sieve analysis of the passing No. 4 or passing 3/4 inch material and the Plasticity Index remain reasonably uniform.

ROCK CORRECTED MAXIMUM DRY DENSITY

3. The corrected maximum dry density of the total sample for the amount of rock (plus No. 4 for Method A proctor or plus 3/4 inch for Alternate Method D proctor) shall be determined by the following equation:

$$CMD = \frac{\left[(100 - PR) \times (MD)\right] + \left[(56.2) \times (PR) \times (SG)\right]}{100}$$

Where: CMD = Corrected maximum dry density of the total sample containing "PR" percent coarse rock particles, lbs./cu. ft.
PR = "PR4", percent rock retained on the No. 4 sieve for Method A; or "PR3/4" percent rock retained on the 3/4 inch sieve for Alternate Method D.
MD = Maximum dry density (Method A for plus No. 4; or Alternate Method D for plus 3/4 inch), lbs./cu. ft.
SG = Bulk O.D. Specific Gravity of the coarse aggregate.

Example (For Method A):

PR = PR4 = 29% rock retained on the No. 4 sieve.
MD = 114.0 lbs./cu. ft.
SG = 2.499

$$CMD = \frac{\left[(100 - 29) \times (114.0)\right] + \left[(56.2) \times (29) \times (2.499)\right]}{100}$$

$$CMD = \frac{\left[(71) \times (114.0)\right] + \left[4072.9\right]}{100} = \frac{\left[8094.0\right] + \left[4072.9\right]}{100}$$

CMD = 121.7 lbs./cu. ft. [Corrected maximum dry density of the total sample containing 29% rock retained on the No. 4 sieve.]

Example (For Alternate Method D):

PR = PR3/4 = 32% rock retained on the 3/4 inch sieve.
MD = 112.6 lbs./cu. ft.
SG = 2.526

$$CMD = \frac{\left[(100 - 32) \times (112.6)\right] + \left[(56.2) \times (32) \times (2.526)\right]}{100}$$

$$CMD = \frac{\left[(68) \times (112.6)\right] + \left[4542.8\right]}{100} = \frac{\left[7656.8\right] + \left[4542.8\right]}{100}$$

CMD = 122.0 lbs./cu. ft. [Corrected maximum dry density of the total sample containing 32% rock retained on the 3/4 inch sieve.]

ROCK CORRECTED OPTIMUM MOISTURE CONTENT

4. The rock corrected optimum moisture content of the total sample shall be determined by the following equation:

$$COM = \frac{\left[(OM) \times (100 - PR)\right] + PR}{100}$$

Where: COM = Corrected optimum moisture content for the total sample.

OM = optimum moisture content for Pass No. 4 (Method A) or pass 3/4 inch material (Alternate Method D).
PR = "PR4", % rock retained on the No. 4 sieve for Method A; or "PR3/4", % rock retained on the 3/4 inch sieve for Alternate Method D.

Example (For Method A):

OM = 14.3%
PR = PR4 = 29% rock retained on the No. 4 sieve.

$$COM = \frac{\left[(14.3) \times [100 - (29)]\right] + (29)}{100}$$

$$COM = \frac{\left[(14.3) \times (71)\right] + (29)}{100} = \frac{\left[1015.3\right] + (29)}{100}$$

COM = 10.4% [Corrected optimum moisture content of the total sample containing 29% rock retained on the No. 4 sieve.]

Example (For Alternate Method D):

OM = 15.2%
PR = PR3/4 = 32% rock retained on the 3/4 inch sieve.

$$COM = \frac{\left[(15.2) \times [100 - (32)]\right] + (32)}{100}$$

$$COM = \frac{\left[(15.2) \times (68)\right] + (32)}{100} = \frac{\left[1033.6\right] + (32)}{100}$$

COM = 10.7% [Corrected optimum moisture content of the total sample containing 32% rock retained on the 3/4 inch sieve.]

USE OF RESULTS

5. (a) The corrected maximum dry density obtained by this method is used, in comparison with the field density of the material, to determine the percentage of compaction.

(b) The corrected optimum moisture content is used to determine the amount of moisture which should be added to the material to achieve maximum dry density.

REPORT

6. (a) Report the corrected maximum dry density to the nearest 0.1 lb./cu. ft.

(b) Report the corrected optimum moisture content to the nearest 0.1 percent.

CALIBRATION OF STANDARD SAND AND SAND CONE

(A Modification of AASHTO Designation T 191)

Scope

1. This method of test is to determine a weight per cubic foot of sand to be used in soil density determinations, and the volume of the sand to fill the funnel on the sand cone.

Apparatus

2. The apparatus shall be as follows:

(a) Sand Cone Assembly. - A 1-gal. jar and a detachable appliance consisting of a cylindrical valve with an orifice 1/2-in. in diameter and having a small funnel connecting to a standard G mason jar top on one end and a large funnel on the other end. The valve shall have stops to prevent rotating the valve past the completely open or closed positions. See Fig. 1.

(b) Sand to be standardized, clean, dry, free flowing and uncemented (obtained from warehouse).

(c) 1/13.33 (0.075) cu. ft. mold. (Volume of mold shall be recalibrated occasionally.)

(d) Straightedge

(e) Balance, 20 kg. capacity, accurate to 1.0 g., or 35 lb. capacity, accurate to 0.01 lb.

Procedure

3. The test shall be as follows:

(a) Fill the jar with the sand to be used and attach the funnel.

(b) Weigh the empty 0.075 cu. ft. mold.

(c) Set the mold in a flat square pan large enough to catch any excess sand.

(d) Invert the apparatus and set the funnel directly over the mold.

(e) Open the valve and let the sand flow freely into the mold being careful not to jar the apparatus, until the sand ceases to move in the jar.

(f) Close the valve sharply and carefully remove the apparatus from the mold.

(g) Using the straightedge, strike off the sand, being careful not to jar the mold. Work the straightedge in the least number of strokes possible until sand is level with the mold. Tap the edge of the mold and weigh and record.

(h) Repeat steps (a) through (g) twice more.

(i) The jar shall now be refilled with the sand, the funnel attached, and the apparatus weighed and recorded.

(j) Place the base plate in the bottom of a level, smooth pan.

(k) Invert the apparatus and place on the base plate in the same manner as the apparatus would be placed over a field density hole.

(l) Open the valve all the way and allow the sand to flow freely, being careful not to jar the apparatus, until the sand ceases to move.

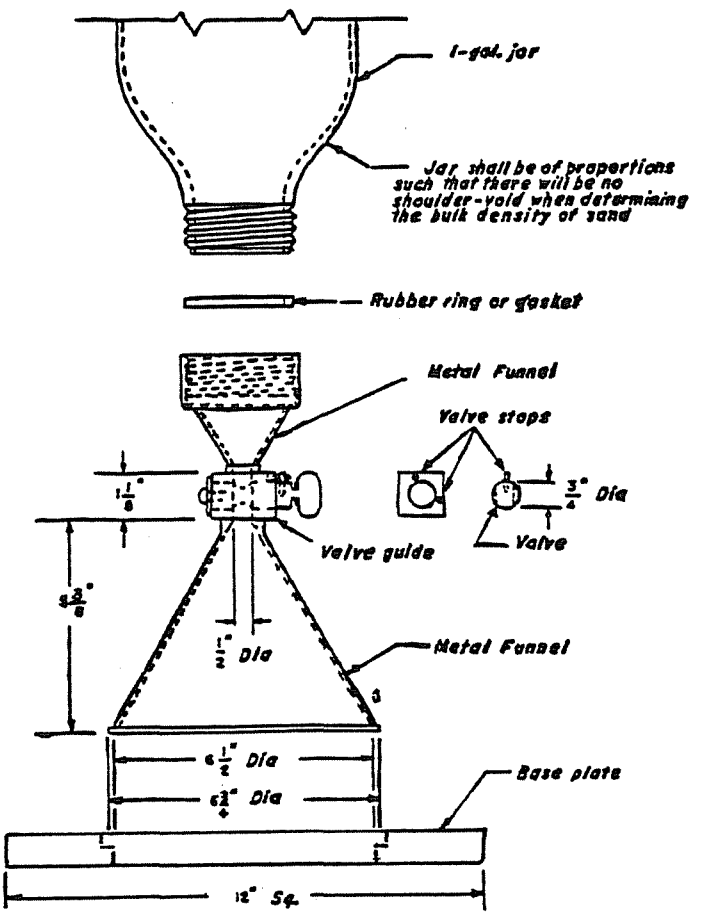

FIGURE 1
Density Apparatus

(m) Close the valve and carefully remove the apparatus from the base plate; weigh the jar and record the weight.

(n) Repeat steps (i) through (m) twice more.

Calculations

4. The calculations are as follows:

(a) Density, D_s, of standard sand, lb./cu. ft.:

	Initial Weight	Final Weight	Difference
Trial #1	5068 g.	1786 g.	3282 g.
Trial #2	5060 g.	1784 g.	3276 g.
Trial #3	5075 g.	1796 g.	3279 g.
		Total	9837 g.

$$\text{Average} = \frac{9837\ \text{g.}}{3} = 3279\ \text{g.}$$

The average of three readings shall be used for computing density (D_s) of standard sand:

$$D_s = \frac{\text{Avg. of 3 wts. (g.)}}{(453.6\ \text{g/lb.})\ (\text{vol. of mold})}$$

Example:

$$D_s = \frac{3279}{(453.6)\ (0.075)} = 96.4\ \text{lb./cu. ft.}$$

(b) Volume of Funnel & Base Plate:

	Initial Weight	Final Weight	Difference
Trial #1	5068 g.	3288 g.	1780 g.
Trial #2	5072 g.	3289 g.	1783 g.
Trial #3	5065 g.	3289 g.	1776 g.
		Total	5339 g.

$$\text{Average} = \frac{5339\ \text{g.}}{3} = 1780\ \text{g.}$$

The average of three readings shall be used for computing the volume of the funnel and base plate.

$$\text{Vol., cu. ft.} = \frac{\text{Avg. of 3 wts. (g.)}}{(453.6)\ (D_s)}$$

Example:

$$\text{Vol., cu. ft.} = \frac{1780}{(453.6)\ (96.4)} = .0407\ \text{cu. ft.}$$

FIELD DENSITY BY THE SAND CONE METHOD

(A Modification of AASHTO Designation T 191)

SCOPE

1. (a) This method is used to determine the density of compacted soils or aggregates by determining the weight and moisture content material removed from a test hole and measuring the volume of the test hole.

(b) This test method may involve hazardous material, operations, or equipment. This test method does not purport to address all of the safety concerns associated with its use. It is the responsibility of the user to consult and establish appropriate safety and health practices and determine the applicability of any regulatory limitations prior to use.

(c) See Appendix A1 of the Materials Testing Manual for information regarding the procedure to be used for rounding numbers to the required degree of accuracy.

APPARATUS

2. Apparatus for this test procedure shall consist of the following:

(a) A balance or scale capable of measuring the maximum weight to be determined and conforming to the requirements of AASHTO M231, except the readability and sensitivity of any balance or scale utilized shall be at least 0.01 lbs or at least the nearest gram.

(a) Miscellaneous digging tools.

(b) Sand cone apparatus consisting of base plate, cone and sand jar.

(c) Standard sand. (Sand shall be kept dry and free flowing).

(d) Containers with air tight covers (cylinder molds are satisfactory).

(e) Oven, hot plate, stove or Speedy Moisture Tester.

NOTE: Calibration of the sand and sand cone apparatus shall be done in accordance with AZ 229.

PREPARATION OF TEST SITE

3. The surface of the area where the test is to be conducted shall be prepared as follows:

(a) Clean away all loose soil and rock from an area of about 3 feet square at the spot where the test is to be made. In areas compacted by 'Sheep's foot' rollers, it is necessary to get below the depth of the 'foot' imprints.

(b) The top of the material at the chosen location shall be prepared to a plane and level surface for an area slightly larger than the size of the base plate. The base plate shall then be placed on this level surface.

PROCEDURE

4. (a) A hole shall be dug approximately the diameter of the hole in the base plate and to the desired depth. (Usually 6 inches to 8 inches). While digging, especially using a hammer and chisel, care must be taken to avoid prying as this may deform the hole, disturb the surrounding material and give a false reading. All of the material removed from the hole shall be carefully recovered and put into a suitable container and covered with a lid or damp cloth, also making sure to get the hole as clean as possible. This operation shall be done as quickly as possible to avoid any excessive drying of the sample.

Suggested test hole volumes and corresponding moisture sample weights are given in Table 1. There will be occasions where the values listed in Table 1 will be difficult to arrive at or follow, such as in the case where we are limited to a shallow depth of compacted material. This table is offered as a guide and should be followed in most cases, however, deviations from theses values are allowable when conditions warrant. The 'Speedy' Moisture Method (AASHTO T-217) may be used to determine the moisture content. The 'Speedy' Method will give the percent moisture on the passing the No. 4 material. If the sample contains material retained on the No. 4 sieve the 'Speedy' results must be adjusted in accordance with the following formula to obtain the percent moisture of the total sample.

$$W = \frac{w(100 - R) + R}{100}$$

Where:

W = % moisture in total sample
w = % moisture in Pass No. 4 material
R = % rock (Plus No. 4 sieve)

An example of this formula is shown under Calculations in this procedure.

Table 1

Maximum Particle Size Retained	Minimum Test Hole Volume cu ft	Minimum Moisture Content Sample grams
No. 4 sieve	0.060	100
½ in.	0.060	250
1 in.	0.075	500
2 in.	0.100	1000
2-1/2 in.	0.135	1500

(b) Weigh the filled sand cone apparatus and place over the base plate with the cone down. A match mark on the cone of the apparatus and the base plate is required to ensure that the apparatus is placed on the base plate the same way every time.

(c) Make sure there is no construction equipment operating in the immediate vicinity as any vibrations will cause a false volume determination.

(d) Open the valve all the way and let the sand flow freely, being careful not to jar the apparatus while the sand is flowing. When the sand ceases to move in the bottle, close the valve and remove the apparatus.

(e) Weigh the sand cone apparatus with the remaining sand to determine the volume of the hole.

REFERENCE TO METHOD 'A' PROCTOR

5. If referencing to Method 'A' Proctor continue as follows:

(a) Weigh the material removed from the test hole.

(b) Screen over a 3" and No. 4 sieve.

(c) With a small brush clean as many fines from the rock as possible.

(d) If any rock is retained on the 3" sieve, verify this with a sieve analysis and call this the end point. This sieve analysis shall be reported with a note stating the density is not determinable due to the rock retained on a 3" sieve.

(e) Weigh and record the weight of the material retained on the No. 4 sieve.

(f) Immediately weigh a moisture sample from the passing No. 4 material to be run either by 'Speedy' or Hot Plate Method.

(g) Determine the percent of rock by the following equation.

$$\% \text{ Rock} = \frac{\text{wt. of +\#4 material}}{\text{total wt. of material removed from hole}} \times 100$$

(h) If the rock content is greater than 50% (or 60% in the case of Aggregate Base) report the sieve analysis with a note stating that the density is not determinable due to excess rock.

Note: When conditions prevent density determination in areas due to the presence of excessive rock or rock retained on the 3" sieve, an attempt shall be made to compact these areas comparable to those surrounding locations where the required compaction was found through testing to be satisfactory.

(i) If less than 50% (or 60% in the case of Aggregate Base) is retained on the No. 4 sieve, proceed with the following calculations.

CALCULATIONS

6. (a) Weight of sand, in lbs., to fill hole and funnel (W_s):

$$W_s = \frac{W_o - W_f}{453.6 \text{ g/lb}}$$

Where:

W_o = original wt. of sand and apparatus, g.
W_f = final wt. of sand and apparatus, g.

Example:

$$W_s = \frac{(8560 \text{ g}) - (4314 \text{ g})}{453.6 \text{ g/lb}}$$

$$= \frac{4246 \text{ g}}{453.6 \text{ g/lb}}$$

$$= 9.36 \text{ lbs}$$

(b) Volume, in cubic feet, of hole (V):

$$V = \frac{W_s}{D_s} - V_c$$

Where:
W_s = wt. of sand to fill hole and funnel, lb.
D_s = density of sand, lb/cu. ft.
V_c = volume of cone and base plate

Example:

$$V = \frac{(9.36 \text{ lbs})}{(96.4 \text{ lb/cu ft})} - (.0407 \text{ cu ft})$$

$$= .0564 \text{ cu ft}$$

(c) Percent moisture of pass No. 4 material may be determined by utilizing the Speedy Test Method, (AASHTO T 217), or by oven-dry Method, (AASHTO T 265).

$$w = \frac{W_w - W_d}{W_d} \times 100$$

Where:

W_w = weight of wet soil, g.
W_d = weight of dry soil, g.
w = % moisture in pass No. 4 material

Example:

$$W = \frac{(322\text{ g}) - (289\text{ g})}{(289\text{ g})} \times 100 = \frac{33\text{ g}}{289\text{ g}}$$

$$= 11.4\ \%$$

(d) Moisture content of the total sample expressed in percentage shall be calculated as follows:

$$W = \frac{w(100 - R) + R}{100}$$

Where:
W = % moisture in total sample
w = % moisture in Pass No. 4 material
R = % rock (Plus No. 4 material)

Example:

w = 11.4 %
R = 29 %

$$W = \frac{11.4\ (100 - 29) + 29}{100} = \frac{838.4}{100} = 8.4\ \%$$

The formula assumes that the rock has a moisture content of 1% and is sufficiently accurate to use in most cases. If the moisture content of the rock is appreciably above 2% as on absorbent materials, the central laboratory should be contacted for instructions.

(e) Wet density, D_w in lb/cu. ft. of material:

$$D_w = \frac{W_t}{V}$$

Where:

W_t = weight of total sample, lb.

Example:

$$D_w = \frac{7.41 \text{ lbs}}{.0564 \text{ cu ft}} = 131.4 \text{ lb/ cu ft}$$

(f) Field dry density, D_d in lb/ cu. ft, of material:

$$D_d = \frac{D_w}{100 + W} \times 100$$

Example:

$$D_d = \frac{131.4 \text{ lb/ cu ft}}{100 + 8.4} \times 100 = 121.2 \text{ lb/ cu ft}$$

(g) $$\text{\% compaction} = \frac{D_d \times 100}{\text{Maximum Density (Corrected)}}$$

Example:

Maximum Dry Density (pass No. 4 material) = 114.0 lb/ cu ft

Percent rock = 29 %

Corrected Maximum Dry Density = 122.0 lb/ cu ft

Note: Compaction shall be reported to the nearest whole percent

$$\% \text{ compaction} = \frac{121.2 \text{ lb/ cu ft} \times 100}{122.0 \text{ lb/ cu ft}}$$

$$= 99 \%$$

REFERENCE TO ALTERNATE METHOD 'D' PROCTOR

7. If referencing to Alternate Method 'D' Proctor continue as follows:

(a) Weigh the material removed from the test hole.

(b) Screen over a 3" and No. 3/4 sieve.

(c) With a small brush clean as many fines from the rock as possible.

(d) If any rock is retained on the 3" sieve, verify this with a sieve analysis and call this the end point. This sieve analysis shall be reported with a note stating the density is not determinable due to the rock retained on a 3" sieve.

(e) Weigh and record the weight of the material retained on the 3/4" sieve.

(f) Screen the material that passes the 3/4" sieve over the No. 4 sieve. Weigh the material that is retained on the No. 4 sieve and add this weight to the weight of the material retained on the 3/4" sieve.

(g) Immediately weigh a moisture sample from the passing No. 4 material to be run either by 'Speedy' or Hot Plate Method.

(h) Determine the percent of rock by the following equation.

$$\% \text{ Rock} = \frac{\text{wt. of +3/4" material}}{\text{total wt. of material removed from hole}} \times 100$$

(h) If the rock content is greater than 40% report the sieve analysis with a note stating that the density is not determinable due to excess rock.

Note: When conditions prevent density determination in areas due to the presence of excessive rock or rock retained on the 3” sieve, an attempt shall be made to compact these areas comparable to those surrounding locations where the required compaction was found through testing to be satisfactory.

(i) If less than 40% is retained on the 3/4” sieve, proceed with the following calculations.

CALCULATIONS

8. (a) The calculations are the same as those for referencing to a Method ‘A’ Proctor. Section 6.

MOISTURE - DENSITY RELATIONSHIP USING TYPICAL MOISTURE - DENSITY CURVES (ONE POINT PROCTOR) METHOD A

(An Arizona Method)

SCOPE

1. (a) This method of test is for the determination of the optimum moisture content and maximum dry density of a soil or soil-aggregate mixture utilizing one moisture-density determination on the portion of the sample passing the No. 4 sieve. Some materials may be more appropriately tested by Arizona Test Method 246, “Moisture-Density Relationship using Typical Moisture-Density Curves (One Point Proctor) Alternate Method D”.

(b) The one-point proctor is used with the typical moisture-density curves, shown on the back of the One Point Proctor Density Test Card (Figures 1 and 2); or by utilizing a family of moisture-density curves developed for the immediate local conditions.

(c) This method is not to be used for volcanic cinders or light porous material on which the specific gravity cannot be determined with consistency or when the absorption of the coarse aggregate is greater than 4.0%.

(d) This method may be used to determine if an existing proctor maximum density determination is valid for the soil being tested. If the existing proctor maximum density determination is not valid, a full proctor according to Arizona 225 should normally be run to determine the maximum density required for that soil type.

(e) An example is provided in Section 7, and Figures 3 and 4, for the calculations and determinations referenced herein.

(f) This test method may involve hazardous materials, operations, and equipment. This test method does not purport to address all of the safety problems associated with its use. It is the responsibility of whoever uses this test method to consult and establish appropriate safety and health practices and determine the applicability of regulatory limitations prior to use.

APPARATUS

2. The apparatus shall consist of the following:

(a) The general apparatus utilized for this test method shall conform to the apparatus requirements of Arizona Test Method 225.

(b) In place of the oven listed in the general apparatus, a hot plate or stove capable of maintaining a temperature of approximately 230° F. may be used. A Speedy Moisture Tester with a conversion table or calibration curve may also be used for moisture determinations made in the field. Finally, a microwave oven may be used in accordance with Arizona Test Method 719.

(c) Instead of the scale or balance capable of measuring the weight to be determined to at least one gram, a scale capable of measuring the weight to at least 0.01 pound may be utilized.

CALIBRATION OF MOLD

3. Molds shall be calibrated in accordance with APPENDIX A of ARIZ 225.

SAMPLE

4. A representative sample of passing No. 4 material weighing approximately 2500 grams shall be obtained for each one-point proctor.

PROCEDURE

5. (a) The approximate 2500 gram sample of passing No. 4 material shall be thoroughly mixed with sufficient water to bring the sample to slightly less than its optimum moisture content.

(b) Form a specimen by compacting the prepared soil in the four inch mold (with extension collar attached) in three equal layers to give a total compacted depth of about 5 inches. Compact each layer with 25 uniformly distributed blows from the rammer, dropping free from a height of 12 inches. While each layer is being compacted, the remainder of material shall be in a pan covered by a damp cloth. During compaction, the mold shall rest firmly on a dense, uniform, rigid and stable foundation.

NOTE: Each of the following has been found to be a satisfactory base on which to rest the mold during compaction of the soil: A block of concrete, weighing not less than 200 lbs., supported by a stable foundation; a sound concrete floor; and for field application, such surfaces as found in concrete box culverts, bridges, and pavements.

(c) When compacting granular, free-draining materials, at moisture contents which are at or above optimum, the mold shall be prepared by first sealing the bottom of the mold with waterproofing grease. All excess grease shall be wiped from the mold and base plate.

(d) Following compaction, carefully remove the extension collar. It may be necessary to use a follower to retain the soil in the mold while removing the collar to prevent damage or disturbance of the soil below the top of the mold. Carefully trim the compacted soil even with the top of the mold by means of the straightedge. If any voids are created during trimming, these shall be filled with fine material and smoothed off. Determine the weight of compacted specimen and mold. Determine the wet density, “WD”, of the compacted soil by the following:

$$WD = \frac{M1 - M2}{VM \times 453.6 \text{ (grams/lb)*}}$$

Where:

WD	=	Wet density of compacted soil, Ib./cu. ft.
Ml	=	Weight of compacted specimen and mold, grams or lbs.
M2	=	Weight of the mold, grams or lbs.
VM	=	Volume of the mold, cu. ft. (See Section 3 of this procedure).

* If the weights of the compacted specimen and mold, Ml, and the empty mold, M2, are measured in pounds, eliminate 453.6 (grams/lb.) from the denominator of the above equation.

(e) Remove the material from the mold and slice vertically through the center. Take a representative minimum 300 gram sample from the full length and width of one of the cut faces. Record the weight of wet soil to the nearest 0.1 gram as “WW”. Dry the sample to constant weight at approximately 230° F. and record weight of dry soil to the nearest 0.1 gram as “DW”. The percent moisture shall be recorded to the nearest 0.1 percent. The equation below is used when the percent moisture is determined by drying the sample. For testing performed in the field, the Speedy Moisture Tester (AASHTO T 217), may be used. For the Speedy Moisture Tester, a representative

sample of the pass No. 4 material shall be utilized and tested in accordance with the instructional manual for that apparatus.

$$\% \text{ Moisture} = \frac{WW - DW}{DW} \times 100$$

MAXIMUM DENSITY DETERMINATION

6. (a) The point representing the wet density and moisture content (dry basis) is then plotted on the Typical Moisture-Density Curves (Figure 2) and the maximum wet density and optimum moisture content determined. When this plotted point falls between two moisture-density curves, a minor interpolation is necessary. The maximum dry density in lb/cu. ft. and the corresponding percent optimum moisture is then read directly or interpolated from the chart. The family of typical moisture-density curves provided should be periodically verified for the local conditions. If it is ascertained that the family of curves provided by Figure 2 is of questionable reliability for given local conditions, then an independent family of curves should be established and used.

(b) The plotted point for wet density and moisture content should be on the dry side of the curve at or near optimum, as it is difficult to interpolate between curves for friable soils when on the wet side of the peak.

(c) If the plotted point representing the wet density and moisture content of the compacted material is on the right of the peak, the test should be repeated using a lower moisture content. An exception to this rule must be made for those soils having high clay contents and relatively flat curves. These soils cannot readily be dried to optimum in the field due to the creation of a cloddy condition which will cause voids in the proctor. Proctors for these materials should be made as near to optimum as possible.

EXAMPLE

7. An illustration of determining the maximum dry density and optimum moisture content is described below, and shown in Figures 3 and 4:

For:

Wet Density	= 120.0 lb./cu. ft.
Moisture Content	= 20.0%

By plotting this point on the Typical Moisture-Density Curves and interpolating, it shows a point which is approximately 60 percent of the distance from Curve Q to Curve R. From the chart, the dry density for Curve Q is 102.4 @ 20.3% moisture and Curve R is 99.9 @ 21.5% moisture.

By interpolation:

Density: 102.4 - 99.9 = 2.5
.60 X 2.5 = 1 .5 lb./cu. ft. difference

Moisture: 21 .5 - 20.3 = 1 .2
.60 X 1.2 = 0.7% difference

Therefore:

Maximum dry density = 102.4 - 1.5
= 100.9 lb./cu. ft.

Optimum Moisture = 20.3 + 0.7 = 21.0%

* As an alternate to performing the interpolation procedure, Table 1 below can be used to determine the maximum dry density and optimum moisture content when the plotted point falls between two moisture-density curves.

NOTE: The optimum moisture and maximum dry density determinations above are for the material passing the No. 4 sieve. When testing field samples for comparison to proctor optimum moisture and maximum dry density, a correction to the proctor optimum moisture and maximum dry density must be made, in accordance with ARIZ 227, for the percent rock which the field sample contains.

REPORT

8. Record the moisture and density data on the laboratory test form along with the laboratory number, material source and type, and other information required.

A	**141.8**	**6.6**	**F**	**129.3**	**9.7**	**K**	**117.0**	**13.5**	**P**	**104.7**	**19.2**	**U**	**92.1**	**25.8**
10%	141.5	6.7	**10%**	129.0	9.8	**10%**	116.8	13.6	**10%**	104.5	19.3	**10%**	91.9	26.0
20%	141.3	6.7	**20%**	128.8	9.9	**20%**	116.5	13.7	**20%**	104.2	19.4	**20%**	91.7	26.1
30%	141.0	6.8	**30%**	128.5	9.9	**30%**	116.3	13.8	**30%**	104.0	19.5	**30%**	91.4	26.3
40%	140.7	6.8	**40%**	128.2	10.0	**40%**	116.0	13.9	**40%**	103.8	19.6	**40%**	91.2	26.4
50%	140.5	6.9	**50%**	128.0	10.1	**50%**	115.8	14.1	**50%**	103.6	19.8	**50%**	91.0	26.6
60%	140.2	7.0	**60%**	127.7	10.2	**60%**	115.6	14.2	**60%**	103.3	19.9	**60%**	90.8	26.8
70%	139.9	7.0	**70%**	127.4	10.3	**70%**	115.3	14.3	**70%**	103.1	20.0	**70%**	90.6	26.9
80%	139.6	7.1	**80%**	127.1	10.3	**80%**	115.1	14.4	**80%**	102.9	20.1	**80%**	90.3	27.1
90%	139.4	7.1	**90%**	126.9	10.4	**90%**	114.8	14.5	**90%**	102.6	20.2	**90%**	90.1	27.2
B	**139.1**	**7.2**	**G**	**126.6**	**10.5**	**L**	**114.6**	**14.6**	**Q**	**102.4**	**20.3**	**V**	**89.9**	**27.4**
10%	138.8	7.3	**10%**	126.4	10.6	**10%**	114.3	14.7	**10%**	102.2	20.4	**10%**	89.7	27.6
20%	138.5	7.3	**20%**	126.1	10.6	**20%**	114.1	14.8	**20%**	101.9	20.5	**20%**	89.4	27.8
30%	138.3	7.4	**30%**	125.9	10.7	**30%**	113.8	15.0	**30%**	101.7	20.7	**30%**	89.2	28.0
40%	138.0	7.5	**40%**	125.6	10.8	**40%**	113.6	15.1	**40%**	101.4	20.8	**40%**	88.9	28.2
50%	137.7	7.6	**50%**	125.4	10.9	**50%**	113.3	15.2	**50%**	101.2	20.9	**50%**	88.7	28.5
60%	137.4	7.6	**60%**	125.2	10.9	**60%**	113.0	15.3	**60%**	100.9	21.0	**60%**	88.5	28.7
70%	137.1	7.7	**70%**	124.9	11.0	**70%**	112.8	15.4	**70%**	100.7	21.1	**70%**	88.2	28.9
80%	136.9	7.8	**80%**	124.7	11.1	**80%**	112.5	15.6	**80%**	100.4	21.3	**80%**	88.0	29.1
90%	136.6	7.8	**90%**	124.4	11.1	**90%**	112.3	15.7	**90%**	100.2	21.4	**90%**	87.7	29.3
C	**136.3**	**7.9**	**H**	**124.2**	**11.2**	**M**	**112.0**	**15.8**	**R**	**99.9**	**21.5**	**W**	**87.5**	**29.5**
10%	136.1	8.0	**10%**	124.0	11.3	**10%**	111.8	15.9	**10%**	99.7	21.6	**10%**	87.3	29.6
20%	135.9	8.0	**20%**	123.7	11.3	**20%**	111.5	16.0	**20%**	99.4	21.7	**20%**	87.0	29.7
30%	135.6	8.1	**30%**	123.5	11.4	**30%**	111.3	16.1	**30%**	99.2	21.9	**30%**	86.8	29.8
40%	135.4	8.1	**40%**	123.2	11.5	**40%**	111.0	16.2	**40%**	98.9	22.0	**40%**	86.5	29.9
50%	135.2	8.2	**50%**	123.0	11.6	**50%**	110.8	16.4	**50%**	98.7	22.1	**50%**	86.3	30.0
60%	135.0	8.3	**60%**	122.7	11.6	**60%**	110.6	16.5	**60%**	98.4	22.2	**60%**	86.0	30.1
70%	134.8	8.3	**70%**	122.5	11.7	**70%**	110.3	16.6	**70%**	98.2	22.3	**70%**	85.8	30.2
80%	134.5	8.4	**80%**	122.2	11.8	**80%**	110.1	16.7	**80%**	97.9	22.5	**80%**	85.5	30.3
90%	134.3	8.4	**90%**	122.0	11.8	**90%**	109.8	16.8	**90%**	97.7	22.6	**90%**	85.3	30.4
D	**134.1**	**8.5**	**I**	**121.7**	**11.9**	**N**	**109.6**	**16.9**	**S**	**97.4**	**22.7**	**X**	**85.0**	**30.5**
10%	133.9	8.6	**10%**	121.5	12.0	**10%**	109.4	17.0	**10%**	97.1	22.9	**10%**	84.8	30.6
20%	133.7	8.6	**20%**	121.2	12.1	**20%**	109.1	17.1	**20%**	96.8	23.0	**20%**	84.6	30.7
30%	133.5	8.7	**30%**	121.0	12.1	**30%**	108.9	17.3	**30%**	96.6	23.2	**30%**	84.4	30.8
40%	133.3	8.7	**40%**	120.7	12.2	**40%**	108.6	17.4	**40%**	96.3	23.4	**40%**	84.2	30.9
50%	133.1	8.8	**50%**	120.5	12.3	**50%**	108.4	17.5	**50%**	96.0	23.6	**50%**	84.0	31.0
60%	132.8	8.8	**60%**	120.3	12.4	**60%**	108.1	17.6	**60%**	95.7	23.7	**60%**	83.8	31.1
70%	132.6	8.9	**70%**	120.0	12.5	**70%**	107.9	17.7	**70%**	95.4	23.9	**70%**	83.6	31.2
80%	132.4	8.9	**80%**	119.8	12.5	**80%**	107.6	17.9	**80%**	95.2	24.1	**80%**	83.4	31.3
90%	132.2	9.0	**90%**	119.5	12.6	**90%**	107.4	18.0	**90%**	94.9	24.2	**90%**	83.2	31.4
E	**132.0**	**9.0**	**J**	**119.3**	**12.7**	**O**	**107.1**	**18.1**	**T**	**94.6**	**24.4**	**Y**	**83.0**	**31.5**
10%	131.7	9.1	**10%**	119.1	12.8	**10%**	106.9	18.2	**10%**	94.4	24.5	**10%**	82.8	31.6
20%	131.5	9.1	**20%**	118.8	12.9	**20%**	106.6	18.3	**20%**	94.1	24.7	**20%**	82.6	31.7
30%	131.2	9.2	**30%**	118.6	12.9	**30%**	106.4	18.4	**30%**	93.9	24.8	**30%**	82.4	31.8
40%	130.9	9.3	**40%**	118.4	13.0	**40%**	106.1	18.5	**40%**	93.6	25.0	**40%**	82.2	31.9
50%	130.7	9.4	**50%**	118.2	13.1	**50%**	105.9	18.7	**50%**	93.4	25.1	**50%**	82.1	32.0
60%	130.4	9.4	**60%**	117.9	13.2	**60%**	105.7	18.8	**60%**	93.1	25.2	**60%**	81.9	32.1
70%	130.1	9.5	**70%**	117.7	13.3	**70%**	105.4	18.9	**70%**	92.9	25.4	**70%**	81.7	32.2
80%	129.8	9.6	**80%**	117.5	13.3	**80%**	105.2	19.0	**80%**	92.6	25.5	**80%**	81.5	32.3
90%	129.6	9.6	**90%**	117.2	13.4	**90%**	104.9	19.1	**90%**	92.4	25.7	**90%**	81.3	32.4
F	**129.3**	**9.7**	**K**	**117.0**	**13.5**	**P**	**104.7**	**19.2**	**U**	**92.1**	**25.8**	**Z**	**81.1**	**32.5**

TABLE 1

ONE POINT PROCTOR DENSITY

Lab. No: _____ Org No.: _____ Date: _____
Project No. _____ Tracs No. _____
Original Source: _____ Type of Material: _____
Coarse Agg. % Absorp.: _____ Coarse Agg. Bulk O.D. Sp. Gr.: _____
Proctor Method Used: Method A _____ Alternate Method D _____
Test Operator: _____ Date: _____
Supervisor: _____ Date: _____

Wet Density Determination

Volume of Mold = VM = _____ Cu. ft.
Weight of Mold = M2 = _____ grams _____ pounds
Weight of Sample and Mold = M1 = _____ grams _____ pounds

$$\text{Wet Density} = WD = \frac{M1 - M2}{VM \times 453.6 \text{ (grams/lb.)*}} = \_\_\_\_\_ \text{ lb./cu.ft.}$$

*If M1 and M2 are in pounds, eliminate "453.6 (grams/lb.)" from denominator in above equation.

Percent Moisture Determination

For either Method A or Alternate Method D, when sample is oven dried:

Wet Weight of Moisture Sample = WW = _____ grams
Dry Weight of Moisture Sample = DW = _____ grams

$$\text{\% Moisture} = \frac{WW - DW}{DW} \times 100 = \_\_\_\_\_ \text{ \%}$$

For Method A, when Speedie Moisture Tester is used:

% Moisture = _____ %

For Alternate Method D, when Speedie Moisture Tester is used:

WT = _____ WR4 = _____ PR4 = $\frac{WR4}{WT} \times 100$ = _____ %

% Moisture in Pass No. 4 material from Speedie = W = _____ %

$$\text{Total \% Moisture} = TW = \frac{W(l00 — PR4) + PR4}{100} = \_\_\_\_\_ \text{ \%}$$

From Typical Moisture-Density Curves:
Maximum Dry Density = MD = _____ lb./cu. ft.
Percent Optimum Moisture = OM = _____ %

REMARKS: _____

FIGURE 1

TYPICAL MOISTURE-DENSITY CURVES

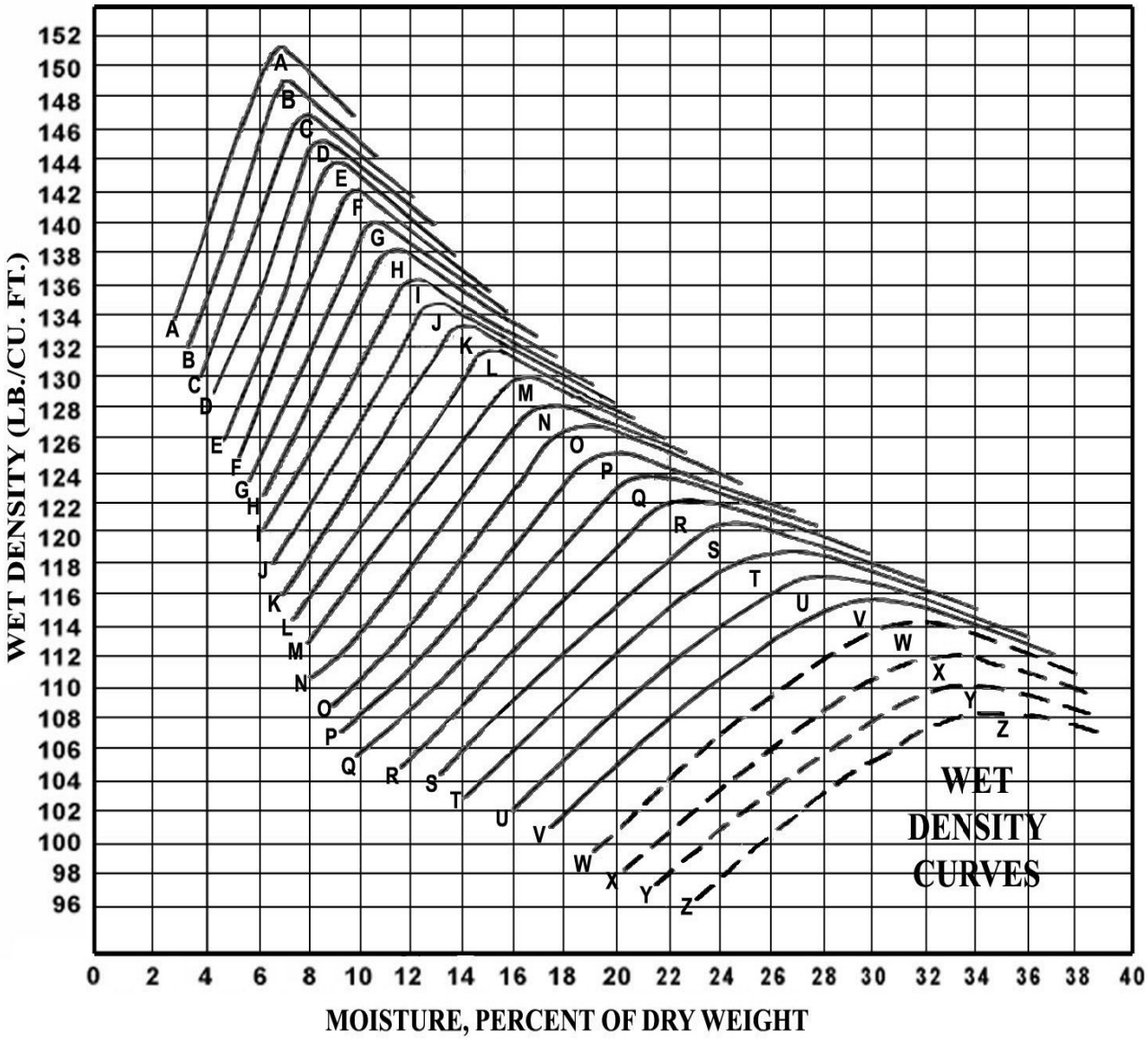

Curve	Max Dry Wt. lbs/cu.ft.	Optimum Moisure
A	141.8	6.6
B	139.1	7.2
C	136.3	7.9
D	134.1	8.5
E	132.	9.0
F	129.3	9.7
G	126.6	10.5
H	124.2	11.2
I	121.7	11.9
J	119.3	12.7
K	117.0	13.5
L	114.6	14.6
M	112.0	15.8
N	109.6	16.9
O	107.1	18.1
P	104.7	19.2
Q	102.4	20.3
R	99.9	21.5
S	97.4	22.7
T	94.6	24.4
U	92.1	25.8
V	89.9	27.4
W	87.5	29.5
X	85.0	30.5
Y	83.0	31.5
Z	81.1	32.5

FIGURE 2

ONE POINT PROCTOR DENSITY

Lab. No: _____ Org No.: _____ Date: _____
Project No. _____ Tracs No. _____
Original Source: _____ Type of Material: _____
Coarse Agg. % Absorp.: _____ Coarse Agg. Bulk O.D. Sp. Gr.: _____
Proctor Method Used: Method A _____ **X** _____ Alternate Method D _____
Test Operator: _____ Date: _____
Supervisor: _____ Date: _____

Wet Density Determination

Volume of Mold = VM = **0.0335** Cu. ft.
Weight of Mold = M2 = _____ grams **10.23** pounds
Weight of Sample and Mold = M1 = _____ grams **14.25** pounds

$$\text{Wet Density} = WD = \frac{M1 - M2}{VM \times 453.6\ (\text{grams/lb.})^*} = \mathbf{120.0}\ \text{lb./cu.ft.}$$

*If M1 and M2 are in pounds, eliminate "453.6 (grams/lb.)" from denominator in above equation.

Percent Moisture Determination

For either Method A or Alternate Method D, when sample is oven dried:

Wet Weight of Moisture Sample = WW = **340.4** grams
Dry Weight of Moisture Sample = DW = **283.7** grams

$$\%\ \text{Moisture} = \frac{WW - DW}{DW} \times 100 = \mathbf{20.0}\ \%$$

For Method A, when Speedie Moisture Tester is used:

% Moisture = _____ %

For Alternate Method D, when Speedie Moisture Tester is used:

WT = _____ WR4 = _____ PR4 = $\frac{WR4}{WT} \times 100$ = _____ %

% Moisture in Pass No. 4 material from Speedie = W = _____ %

$$\text{Total \% Moisture} = TW = \frac{W(l00 — PR4) + PR4}{100} = \_\_\_\_\_\ \%$$

From Typical Moisture-Density Curves:
Maximum Dry Density = MD = **100.9** lb./cu. ft.
Percent Optimum Moisture = OM = **21.0** %

REMARKS: _____

FIGURE 3

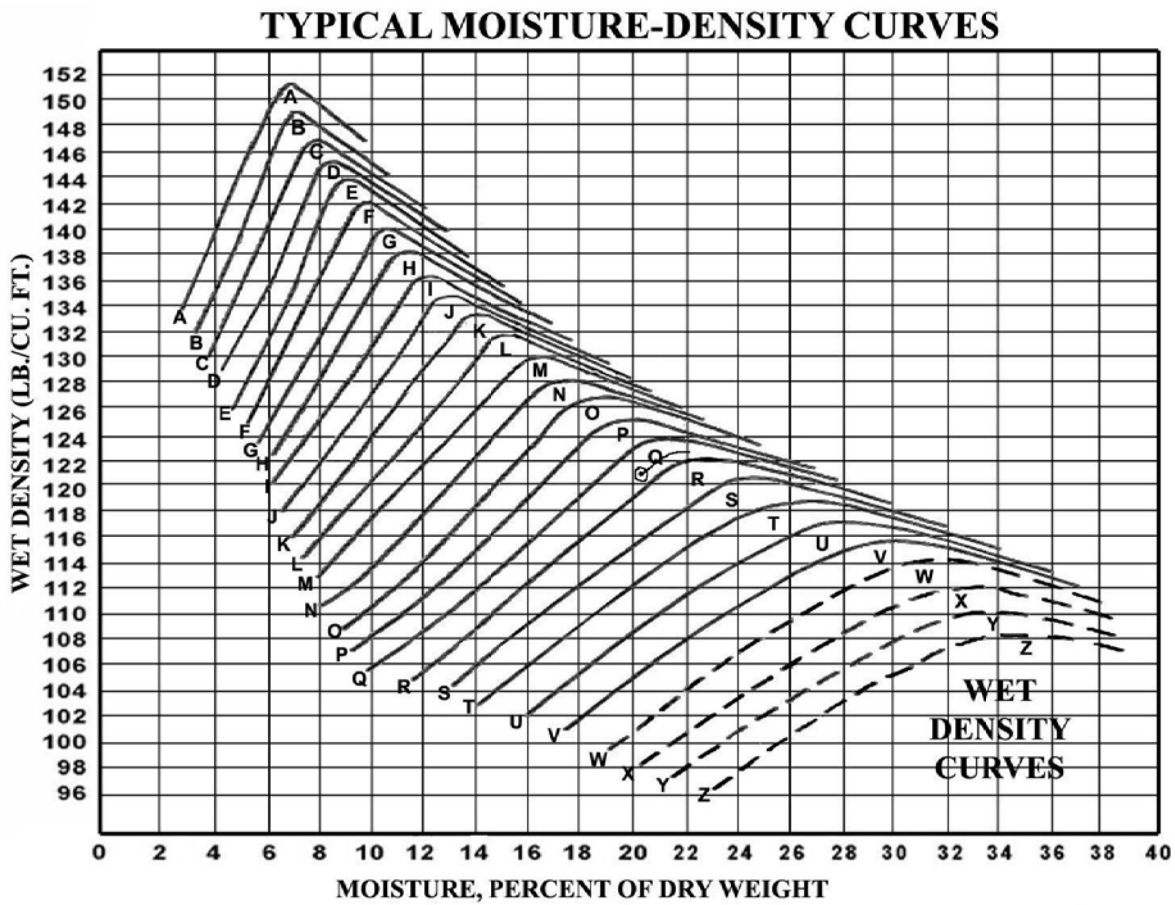

Curve	Max Dry Wt. lbs/cu.ft.	Optimum Moisure
A	141.8	6.6
B	139.1	7.2
C	136.3	7.9
D	134.1	8.5
E	132.	9.0
F	129.3	9.7
G	126.6	10.5
H	124.2	11.2
I	121.7	11.9
J	119.3	12.7
K	117.0	13.5
L	114.6	14.6
M	112.0	15.8
N	109.6	16.9
O	107.1	18.1
P	104.7	19.2
Q	102.4	20.3
R	99.9	21.5
S	97.4	22.7
T	94.6	24.4
U	92.1	25.8
V	89.9	27.4
W	87.5	29.5
X	85.0	30.5
Y	83.0	31.5
Z	81.1	32.5

Approx. 60% Below Curve Q

Interpolated Max. Dry Density: 102.4 (Curve Q)
- 99.9 (Curve R)
2.5 X 0.60 = 1.5 lb./cu. ft. *102.4 - 1.5 = 100.9 lb. / cu. ft.*

Interpolated % Optimum Moisture: 21.5 (Curve R)
- 20.3 (Curve Q)
1.2 X 0.60 = 0.7% *20.3 + 0.7 = 21.0%*

FIGURE 4

FLAKINESS INDEX OF COARSE AGGREGATE

(An Arizona Method)

SCOPE

1. (a) This test method describes the procedure for determining the "Flakiness Index" (flatness) of coarse [Plus 2.36 mm (No. 8) aggregate]. The Flakiness Index is the percentage of particles having a least dimension smaller than 60 percent of the mean size of each of one or more of the coarse sieve fractions. The lower the index for any sample of aggregate, the more nearly the aggregate particles approximate a cubical shape.

(b) Once the Flakiness Index is known, the average least dimension of the aggregate can be determined if required, for example as in Arizona Test Method 819, "Design of Exposed Aggregate Seal Coats". The procedure for determining the average least dimension of the aggregate is described in Section 6 of this test method.

(c) This test method may involve hazardous material, operations, or equipment. This test method does not purport to address all of the safety concerns associated with its use. It is the responsibility of the user to consult and establish appropriate safety and health practices and determine the applicability of any regulatory limitations prior to use.

(d) See Appendix A1 of the Materials Testing Manual for information regarding the procedure to be used for rounding numbers to the required degree of accuracy.

(e) Metric (SI) units and values are shown in this test method with English units and values following in parentheses. Values given for metric and English units may be numerically equivalent (soft converted) for the associated units, or they may be given as rounded or rationalized values (hard converted). Either the metric or English units along with their corresponding values shall be used in accordance with applicable specifications. See Appendix A2 of the Materials Testing Manual for additional information on the metric system.

APPARATUS

2. Requirements for the frequency of equipment calibration and verification are found in Appendix A3 of the Materials Testing Manual. Apparatus for this test procedure shall consist of the following:

(a) For each size of material to be tested, a 16 gauge steel plate [1.6 mm (1/16 inch) nominal thickness] with a slotted opening approximately 100 mm (4 inches) in length and having a width conforming to the applicable requirements given below. If desired, the same plate may contain all or some of the required slots, rather than a separate plate for each.

Size of Material Passing	Size of Material Retained	Slot Width (millimeters)	Slot Width Tolerance (mm)
37.5 mm	25.0 mm	18.8	± 0.6
25.0 mm	19.0 mm	13.2	± 0.4
19.0 mm	12.5 mm	9.5	± 0.3
12.5 mm	9.5 mm	6.6	± 0.2
9.5 mm	6.3 mm	4.7	± 0.1
6.3 mm	4.75 mm	3.3	± 0.1
4.75 mm	2.36 mm	2.1	± 0.1

Size of Material Passing	Size of Material Retained	Slot Width (inches)	Slot Width Tolerance (inches)
1-1/2"	1"	0.738	± 0.023
1"	3/4"	0.520	± 0.016
3/4"	1/2"	0.372	± 0.012
1/2"	3/8"	0.260	± 0.008
3/8"	1/4"	0.187	± 0.006
1/4"	No. 4	0.131	± 0.004
No. 4	No. 8	0.084	± 0.003

(b) A balance or scale capable of measuring the maximum weight to be determined and conforming to the requirements of AASHTO M 231, except the readability and sensitivity of any balance or scale utilized shall be at least one gram.

(c) Sieves conforming to the requirements of AASHTO M 92, of sizes 37.5 mm (1-1/2"), 25.0 mm (1"), 19.0 mm (3/4"), 12.5 mm (1/2"), 9.5 mm (3/8"), 6.3 mm (1/4"), 4.75 mm (No. 4), and 2.36 mm (No. 8), as necessary for the material being tested.

SAMPLE PREPARATION

3. (a) A representative sample of the aggregate for the specified use shall be obtained. The size of sample shall be at least the size required by Arizona Test Method 201, and larger if necessary to provide adequate material for the applicable required individual size fractions indicated below. (See paragraph (c) below for determination of the individual size fractions to be tested.)

Size of Material		Minimum Test
Passing	Retained	Sample (grams)
37.5 mm (1-1/2")	25.0 mm (1")	3000
25.0 mm (1")	19.0 mm (3/4")	1500
19.0 mm (3/4")	12.5 mm (1/2")	1000
12.5 mm (1/2")	9.5 mm (3/8")	500
9.5 mm (3/8")	6.3 mm (1/4")	200
6.3 mm (1/4")	4.75 mm (No. 4)	100
4.75 mm (No. 4)	2.36 mm (No. 8)	50

(b) The sample shall be subjected to sieve analysis in accordance with Arizona Test Method 201. If both the coarse and fine sieve analysis of the material are performed, material passing the 4.75 mm (No. 4) sieve shall be separated into 2.36 mm (No. 8) and passing 2.36 mm (No. 8) fractions by sieving over a 2.36 mm (No. 8) sieve. Reference can also be made to Section 3 of Arizona Test Method 248 for utilizing a 2.36 mm (No. 8) sieve in the coarse sieving, and a fine sieve analysis not being required. The coarse aggregate size fractions of 2.36 mm (No. 8) and larger shall be placed in individual containers. The material passing the 2.36 mm (No. 8) sieve may be discarded.

(c) From each size fraction that has a percent retained value from sieve analysis which is equal to or greater than 10%, obtain a representative test sample of the weight specified in paragraph (a) above.

FLAKINESS INDEX TEST PROCEDURE

4. (a) Weigh each test sample to the nearest gram and record as the "Weight of Test Sample", for the respective size fraction.

(b) The particles from the test sample for each size fraction shall be individually tested for their ability to pass through the appropriate slot, as specified in paragraph 2(a). Weigh the material which passes the appropriate slot, and record to the nearest gram as the "Weight Passing Slot", for the respective size fraction.

CALCULATIONS FOR FLAKINESS INDEX DETERMINATION

5. (a) Figure 1 is a blank Flakiness Index form which contains the required calculations. An example is given in Figure 2.

(b) Calculate the "Percent Passing Slot", for each respective size fraction, and record to the nearest percent.

(c) Calculate the "Flakiness Index", and report the result to the nearest percent.

DETERMINATION OF AVERAGE LEAST DIMENSION OF AGGREGATE

6. When it is required (such as in Arizona Test Method 819), the average least dimension of the aggregate may be determined by using Figures 3 and 4. (These figures include an example which illustrates the procedure described in the paragraphs below.)

(a) The median size of the aggregate is determined as shown in the example in Figure 3. Plot the % passing from sieve analysis for the two sieve sizes sufficient to locate the 50% line intercept. Draw a line between the two points. From the 50% passing point on the right side of the chart, proceed horizontally to the left until the line drawn between the two points is intercepted. Draw a line vertically from this point to intercept the "Median Size" scale at the bottom of the chart. Read the resultant median size to the nearest 0.25 mm (0.01 inch).

(b) The average least dimension of the aggregate is determined as shown in the example in Figure 4. Find the point for "Median Size" on the left side of the chart. Proceed horizontally to the right until the corresponding line for Flakiness Index is intercepted. Draw a line vertically from this point to intercept the "AVERAGE LEAST DIMENSION" at the bottom of the chart. Read and record the average least dimension of the aggregate to the nearest 0.25 mm (0.01 inch).

FIGURE 1

FLAKINESS INDEX CALCULATIONS

(ARIZONA TEST METHOD 233)

Project No._____ Lab No._____ Material_____

Sieve Size	37.5 mm (1-1/2")	25.0 mm (1")	19.0 mm (3/4")	12.5 mm (1/2")	9.5 mm (3/8")	6.3 mm (1/4")	4.75 mm (#4)	2.36 mm (#8)
% Pass from Sieve Analysis								
% Ret. from Sieve Analysis (F)								
Weight of Test Sample								
Weight Passing Slot								
* Percent Passing Slot (P)								
NOTE: Only the size fractions which have 10 or more percent retained are tested for passing the apporpriate slot, and used to determine the Flakiness Index by the equation below.	* Percent Passing Slot (P) = $\frac{\text{Weight Passing Slot}}{\text{Weight of Test Sample}} \times 100$							

$$\text{FLAKINESS INDEX} = \frac{\{F[37.5\text{ mm }(1\text{-}1/2")] \times P[37.5\text{ mm }(1\text{-}1/2")]\} + \ldots + \{F[2.36\text{ mm (No. 8)}] \times P[2.36\text{ mm (No. 8)}]\}}{\{F[37.5\text{ mm }(1\text{-}1/2")] + \ldots + F[2.36\text{ mm (No. 8)}]\}}$$

FLAKINESS INDEX = _____ = %

Remarks:

_____

_____

_____

_____

_____

Test Operator and Date:_____ Supervisor and Date:_____

FIGURE 2

FLAKINESS INDEX CALCULATIONS

(ARIZONA TEST METHOD 233)

Project No. F-099-9(9) H099901C Lab No. 96-524 Material COVER MATERIAL

Sieve Size	37.5 mm (1-1/2")	25.0 mm (1")	19.0 mm (3/4")	12.5 mm (1/2")	9.5 mm (3/8")	6.3 mm (1/4")	4.75 mm (#4)	2.36 mm (#8)
% Pass from Sieve Analysis				100	78	27	13	2
% Ret. from Sieve Analysis (F)				0	22	51	14	11
Weight of Test Sample				-	611	263	139	78
Weight Passing Slot				-	104	71	28	19
* Percent Passing Slot (P)				-	17	27	20	24

NOTE: Only the size fractions which have 10 or more percent retained are tested for passing the apporpriate slot, and used to determine the Flakiness Index by the equation below.

$$\text{* Percent Passing Slot (P)} = \frac{\text{Weight Passing Slot}}{\text{Weight of Test Sample}} \times 100$$

$$\text{FLAKINESS INDEX} = \frac{\{F\,[37.5\text{ mm }(1\text{-}1/2")] \times P\,[37.5\text{ mm }(1\text{-}1/2")]\} + \ldots + \{F\,[2.36\text{ mm (No. 8)}] \times P\,[2.36\text{ mm (No. 8)}]\}}{\{F\,[37.5\text{ mm }(1\text{-}1/2")] + \ldots + F\,[2.36\text{ mm (No. 8)}]\}}$$

$$\text{FLAKINESS INDEX} = \frac{(22 \times 17) + (51 \times 27) + (14 \times 20) + (11 \times 24)}{22 + 51 + 14 + 11} = 23\ \%$$

Remarks:

Test Operator and Date: Joe Tester 11-20-96 Supervisor and Date: Pete Hardman 11-20-96

EXAMPLE

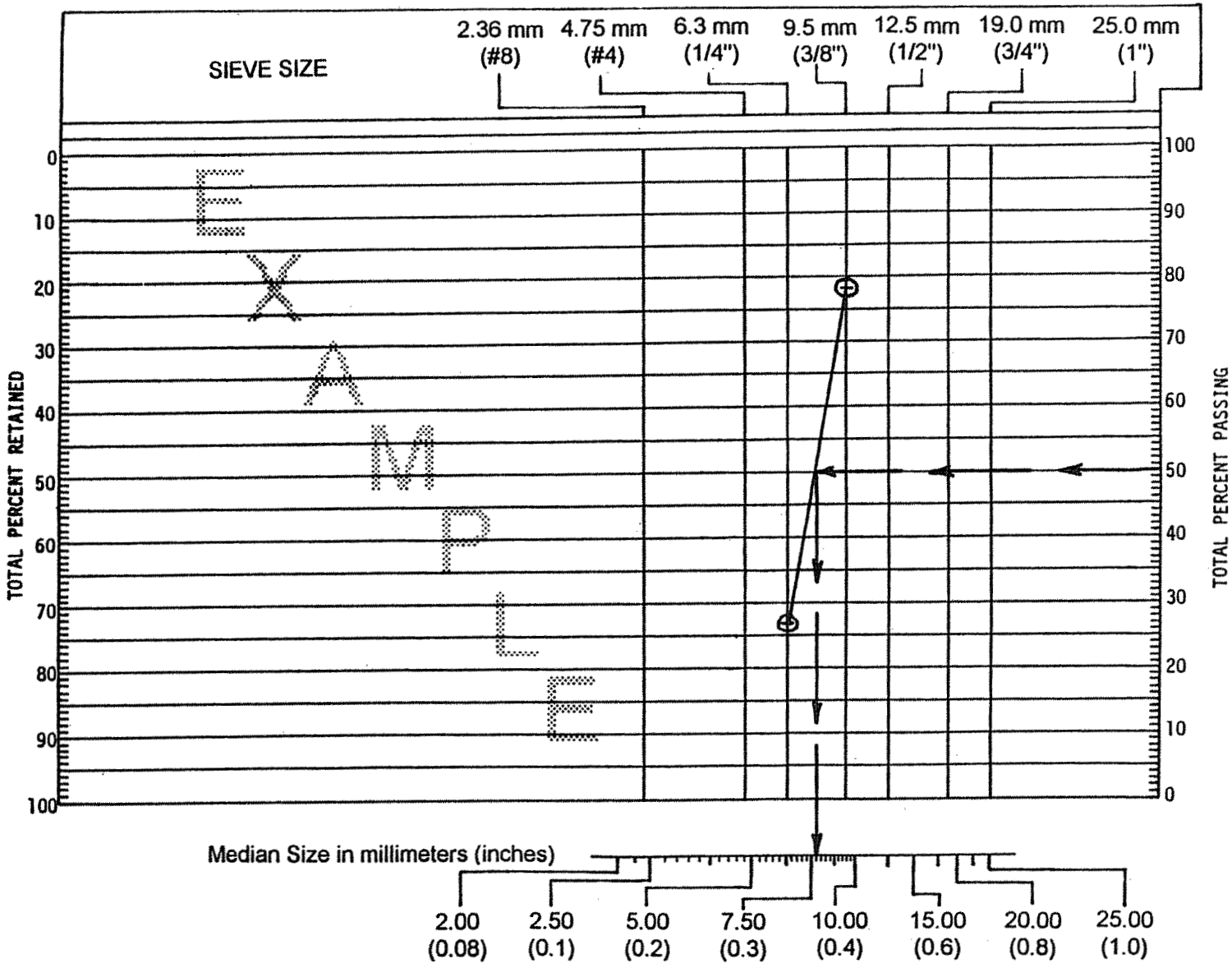

GRADING CHART FOR DETERMINING MEDIAN SIZE OF AGGREGATE

FIGURE 3

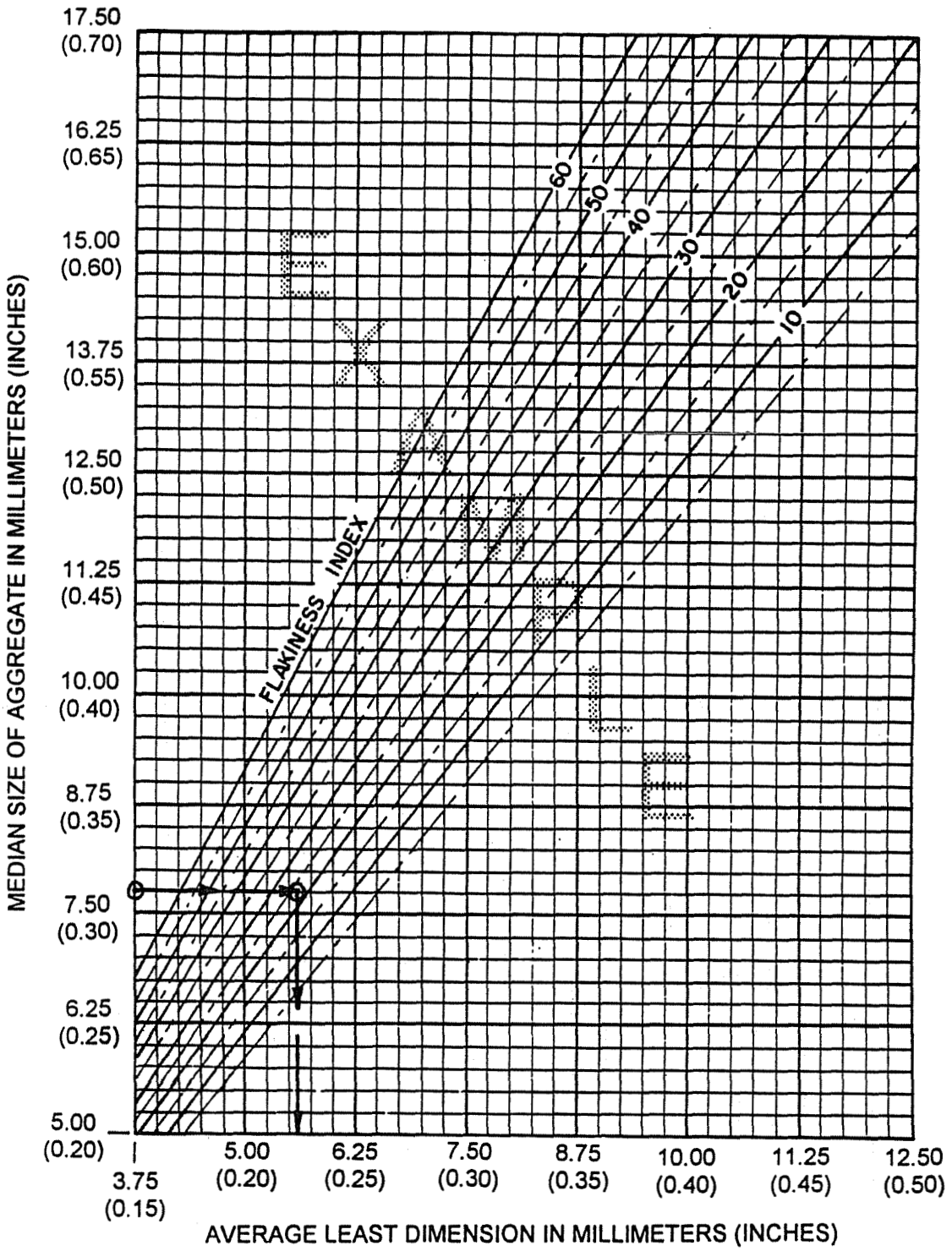

DETERMINATION OF AVERAGE LEAST DIMENSION OF AGGREGATE

FIGURE 4

FIELD DENSITY AND MOISTURE CONTENT OF SOIL AND SOIL-AGGREGATE MIXTURES BY THE NUCLEAR METHOD

(An Arizona Method)

SCOPE

1. (a) This method is used to determine the in-place density and moisture content of compacted soil and soil-aggregate mixtures to a depth of 12 inches with a nuclear gauge. This test method is especially suited for soils of a specified gradation such as aggregate base course, or fine soils of a consistent nature. Rock correction of the Proctor maximum density requires excavation of the soils at the test site to determine rock content, which increases the time required for the test and decreases test efficiency. This method is acceptable for normal soil and aggregate density testing, including pumping and heaving soils, but should not be used for open-graded aggregate.

(b) An example is provided in Figure 1 for the calculations and determinations referenced herein.

SAFETY

2. (a) This test method involves hazardous materials, operations, and equipment. This test method does not purport to address all of the safety problems associated with its use. It is the responsibility of whomever uses this test method to consult and establish appropriate safety and health practices and determine the applicability of regulatory limitations prior to use.

(b) Safety procedures for operation, transport and storage of nuclear gauges shall be in accordance with the manufacturer's recommendations and the applicable regulations of the Arizona Radiation Regulatory Agency (ARRA).

APPARATUS

3. The apparatus shall consist of the following:

(a) Moisture/Density Nuclear gauge capable of determining densities by the direct transmission method. Calibration of the gauge shall be performed in accordance with AASHTO T238, Subsection 3.1., on an annual basis. Adjustment of the calibration curve for field soil conditions shall be done as needed in accordance with AASHTO T238, Subsection 3.3.

(b) Reference standard block or test stand to obtain standard counts for moisture and density which are used to check the gauge stability.

(c) Nuclear gauge transport case and labels which comply with A.R.R.A. Regulations.

(d) Charging cord, if applicable.

(e) Scraper plate and drill rod guide.

(f) Drill rod.

(g) Hammer for driving the drill rod to make the hole for the direct transmission probe.

(h) A #10 sieve or a supply of dry, fine-sieved sand to be used as a sand blanket for surface irregularities at the test site and a fine brush for sand removal.

(i) A #4 and 3/4 inch sieve for use in removing plus #4 or plus 3/4 inch material for rock correction, depending upon the proctor method.

(j) A 3 inch sieve for determining the presence of oversize rock material.

(k) Safety goggles for eye protection, steel-toed footwear, and the radiation exposure badge.

(l) Information packet for the nuclear gauge which shall contain the following items:

1) Moisture/Density Calibration Tables (if required), and a standard count log book.

2) Manufacturer's Gauge Operation Manual for the nuclear gauge.

3) Applicable documentation necessary to meet requirements of ARRA for gauge safety.

4) Blank test forms for use on the applicable nuclear gauge (See Figure 2).

(m) Calculator for necessary computations.

(n) Miscellaneous equipment including watch, pencils, writing paper, ruler, eraser, clip board, and hand cart as required.

GAUGE STABILITY CHECK

4. A density standard count and moisture standard count shall be taken at the beginning of each day of testing at the project where the field density testing is to be performed. The gauge stability check shall be performed as follows:

(a) Place the reference standard block on any asphalt, concrete, compacted aggregate or similar surface which is dry and level. The reference standard block should be at least 24 inches away from any vertical projection, at least 15 feet away from any large object, or vehicle, and at least 50 feet away from another nuclear gauge.

(b) Seat the nuclear gauge on the reference block in accordance with the gauge operation manual. It is very important that the gauge is seated properly on the standard reference block.

(c) Remove the lock on the source handle and make sure the source handle is in the safe or stored position (the top notch on the index rod).

(d) Turn the gauge on (in standby power condition) and allow it to warm-up, if neccessary, for the recommended time as given in the gauge operation manual, normally 15 minutes.

(e) After the warm-up period, take a standard moisture count and a standard density count.

(f) Record the moisture and density standard counts in the proper columns of the standard count log book along with the appropriate additional information, such as date, time, temperature, and location.

(g) Return the gauge to the standby power condition. The gauge should be left in the standby mode for subsequent testing.

(h) Determine if the standard counts are within the limits for normal operation in accordance with the gauge operation manual. This is usually done by comparing the standard counts to the average of the four previous standard counts or utilizing an internal statistical test which is available on some gauges. Additional standard counts may be necessary if initially the gauge does not appear to be operating properly. If the gauge does not meet the normal operating parameters as specified by the Standard Count procedure in the gauge operation manual, the gauge should not be used for testing. It should be sent in for servicing to determine the problem.

NOTE: Some gauges will store standard counts for later use in calculations performed by the gauge itself. The most recent standard counts will usually be stored automatically over preexisting standard counts.

(i) On a weekly basis, compare the average of the four most recent standard counts with the average of four standard counts immediately after gauge calibration or at least three months previous, whichever is shorter. If the accumulative shift in standard count exceeds 2% for moisture or 3% for density, the nuclear gauge should be recalibrated.

SITE PREPARATION

5. (a) Select a location for the field density test at random where the gauge will be at least 24 inches from any vertical projection such as a trench wall, retaining wall or pipe, at least 15 feet away from any vehicle, and at least 50 feet away from another nuclear gauge. If within 24 inches of a vertical projection, refer to section 8, Trench Correction.

(b) Remove all loose, disturbed, and excess material as necessary to reach the top of the compacted lift to be tested. Prepare a horizontal area sufficient in size to accommodate the gauge using the scraper plate supplied with the gauge. Plane the area to a smooth condition removing loose stones to obtain maximum contact between the gauge and the soil or aggregate being tested. Make sure the gauge sits solidly on the test site without rocking.

(c) Use native fines which pass a #10 sieve, or fine dry sand to fill voids only, and level the excess with the scraper plate. The total area of voids filled with fines or sand should be minimized as much as possible.

OBTAINING NUCLEAR MOISTURE AND DENSITY COUNTS

6. (a) Nuclear Density Counts and Moisture Counts shall be obtained by inserting the probe into the soil at the test site. (Refer to the gauge operation manual.) Prior to density count determination, select the mode of testing as follows based on the lift thickness of the soil or aggregate being tested:

LIFT THICKNESS "T" INCHES	TRANSMISSION MODE
$T < 2$	Backscatter
$2 \leq T < 4$	Direct - 2 inch
$4 \leq T < 6$	Direct - 4 inch
$6 \leq T < 8$	Direct - 6 inch
$8 \leq T \leq 12$	Direct - 8 inch
$12 < T$	See 6(b) Below

(b) Tests which require the density for a lift greater than 12 inches in thickness require an initial surface test to determine the density of the upper portion of the lift. Then the soil must be excavated downward to allow another test or tests to determine the density of the lower portion of the lift.

(c) To prepare the gauge for direct transmission testing, place the scraper plate drill rod guide on the test site so that the access hole for the probe will be at the desired location.

(d) Securely hold the scraper plate in place while driving the drill rod into the material. The hole should be at least 2 inches deeper than the depth to be tested. Safety goggles and steel-toed footwear should be worn while driving the drill rod. Note the depth marks on the drill rod. It would be desirable to turn the drill rod slightly after every other blow to allow easier removal.

(e) Remove the drill rod by pulling straight up in order to avoid disturbing the access hole.

(f) Remove the scraper plate and clear away all loose surface material. Using fine material as stated previously, fill any voids caused by driving the drill rod.

(g) Carefully place the gauge over the access hole and extend the probe into the hole to the desired direct transmission mode depth according to the lift thickness as outlined previously. Do not force the probe into the hole. If the probe will not extend into the hole, pull the probe back up. Lift up the gauge and check for a probe imprint. This will help determine if a slight change in the

position of the gauge is necessary to allow the probe to enter the hole. Once the probe is in the hole, gently push it down. Some minor shifting of the gauge may be required to extend the probe in gravelly soils. However, if an obstruction is encountered, it may be necessary to use the drill rod again to open up the hole.

(h) Once the probe is fully extended to the direct transmission depth, pull the gauge firmly, toward the scaler or readout end of the gauge, so that the probe is in firm contact with the soil or aggregate on the scaler side of the hole.

(i) Take density and moisture counts for a minimum one minute time period by pressing the proper button on the gauge. Both counts normally will occur simultaneously during the count period (Refer to the gauge operation manual).

(j) After the count period, press the proper button to obtain the moisture count. Record the moisture count on the data sheet, as "MC". Also, in a similar manner, obtain the density count. Record the density count on the data sheet, as "DC". It is also possible to get a wet density and moisture content readout in lbs./cu.ft. at this time for gauges capable of storing the standard counts and calculating these values (Refer to the gauge operation manual). If so, obtain these values and record on the test data sheet as "WD" and "M" respectively. The gauge may also be capable of calculating the moisture content in %, "M%", and the dry density in lbs./cu.ft., "DD". If so, these values may be recorded on the test data sheet. However, the gauge internal calculations may require some additional corrections as required by the test location or soil type. Refer to Sections 8 and 9 for further information on the trench and moisture corrections.

(k) In those instances when the soil or soil-aggregate mixture being tested in-place is not homogeneous and/or contains substantial variations in the rock content, it may be necessary to rotate the gauge 90 degrees at each test site and obtain an additional moisture and wet density reading at that position. If the new moisture and wet density readings differ by 5% or less from the original readings, the two readings may be averaged for use in later calculations. If they differ from the original readings by more than 5%, the gauge should be moved to a new test site.

PROCTOR DENSITY ROCK CORRECTION

7. (a) For determining the percent compaction based on the maximum proctor densities determined by Method A (Arizona Test Method 225 or 232) or Alternate Method D (Arizona Test Method 245 or 246), a rock correction may be

required for the amount of plus No. 4 (Method A) or plus 3/4 inch (Alternate Method D) rock or coarse aggregate in the material tested by the nuclear gauge.

(b) If it appears that 10% of the material will be retained on the No. 4 sieve (Method A) or 3/4 inch sieve (Alternate Method D), excavate the area occupied by the base of the gauge at the testing location to the depth of the test, which is normally the lift thickness. If an average rock correction is to be utilized, refer to 7(f).

(c) Obtain a minimum 3000 gram (7 pound) sample of excavated material and weigh to the nearest gram. Record the weight of this sample as "A". Sieve this material first over a 3 inch sieve to determine the presence of any oversize rock material. If any oversize rock is encountered, proceed to 7(d). If not, sieve the material over a No. 4 sieve (Method A) or 3/4 inch sieve (Alternate Method D), and record the weight of retained material as "B". Proceed to 7(e).

(d) If any rock is retained on the 3 inch sieve, this shall be reported with a note stating that the density is not determinable due to rock being retained on the 3 inch sieve. Additional attempts should be made to locate an area where the test can be accomplished.

(e) Calculate the percent of coarse particles, "PR" according to the following equation:

$$PR = \frac{B}{A} \times 100$$

Where: PR = Percent of coarse aggregate or rock particles retained on either the No. 4 sieve for Method A or the 3/4 inch for Alternate Method D.

B = Weight of coarse aggregate or rock particles retained on the No. 4 sieve (Method A) or 3/4 inch sieve (Alternate Method D).

A = Weight total of sample which is sieved.

(f) If the material has from 10 to 50 percent (10 to 60 percent in the case of an Aggregate Base) retained on the No. 4 sieve (Method A) or 10 to 50 percent retained on the 3/4 inch sieve (Alternate Method D), the maximum proctor density will require a rock correction. Record the data at the appropriate locations on the data sheet.

(g) If the percent retained on the No. 4 sieve or 3/4 inch exceeds the maximum values listed above (50 or 60 percent), report the percent rock with a note stating that the density is not determinable due to excess rock. Additional attempts should be made to locate an area where a test can be accomplished. Also, if the proctor is a Method A proctor, an Alternate Method D proctor may be considered for this material.

Note: When conditions prevent the determination of density at a specific location, due to the presence of excesssive rock or rock retained on the 3 inch sieve, the compactive effort in those areas should be the same as that performed in surrounding locations where the required density was found through testing to be satisfactory.

(h) If, from the results of a minimum of five samples, it is indicated that no rock is retained on the 3 inch sieve and the percent rock retained on the No. 4 or 3/4 inch sieve is within a 12% range (plus or minus 6% from the average), then an average percent of rock based on the five samples may be utilized. However, if a failing density test results from utilization of this average percent of rock, then the test site must be excavated and the actual percent of rock must be determined in accordance with 7(c) and 7(d) above. If there is a visible change in the material including the percent of rock, then a new proctor is required and a new average percent of rock must be determined.

TRENCH CORRECTION

8. (a) Moisture and dry density test results may be affected when a gauge is operated within 24 inches of a vertical projection such as a trench wall, pipe or retaining wall which contains moisture. The density counts, determined in the direct transmission mode, should not be affected, but moisture counts will possibly be affected. Without a trench correction, the moisture content determined could be higher than the actual moisture content which would cause the dry density determined to be too low. If the density test passes without a trench correction, then a trench correction would not be necessary.

(b) When a trench correction is necessary, refer to the gauge operation manual for the proper procedure in making a trench correction. Usually it is necessary that a moisture count be taken on the standard block in the trench at the same position and orientation that the moisture count for the density test is taken.

(c) Based on the original standard moisture count and the moisture count taken on the standard block in the trench, a trench correction may be made internally in most gauges by a calculation process or by an external manual moisture count shift. Refer to gauge operation manual for the proper input of the trench correction. Be sure to delete this correction after each test since each test location would have a different correction.

MOISTURE CORRECTION

9. (a) Moisture and dry density test results may be affected by hydrogen in the soil unrelated to actual moisture. Only the moisture reading is affected. The wet density reading is not affected.

(b) The moisture correction is obtained by determining the difference between the average oven dry moisture contents and the average nuclear gauge moisture contents for five or more samples obtained per paragraph 7(c). The oven-dry moisture content in percent, "TW", will be determined for each representative sample according to AASHTO T265. The sample shall include all plus No. 4 or 3/4 inch material, since the nuclear gauge measures total moisture. If the moisture is determined by the Speedy Moisture Tester and the sample contains material retained on the No. 4 sieve, the "Speedy" results must be adjusted in accordance with the following formula to obtain the percent moisture of the total sample.

$$TW = \frac{[W(100 - PR)] + PR}{100}$$

Where: TW = % moisture content in total sample
W = % moisture in Pass No. 4 material
PR = % rock retained on the No. 4 sieve

(c) A moisture correction is needed if the difference calculated indicates that the gauge moisture results are more than 1% higher or lower than the oven dry or Speedy results. Moisture corrections of 1% or less may be disregarded.

(d) Most gauges have the capability for correction of the moisture content in % by an internal calculation or an external moisture count shift. Simply apply the moisture correction up or down as applicable in the gauge according to the procedures in the gauge operation manual. Future density calculations within the gauge will apply this moisture count shift until it is deleted by the operator.

MOISTURE-DENSITY CALCULATIONS

10. Calculations shall be performed as follows:

(a) Record the standard counts for moisture and density on the data sheet in the spaces for "MS" and "DS" respectively.

(b) Most current gauges have the internal capability to calculate the moisture content in lbs./cu.ft. and %, the wet density in lbs./cu.ft., and the dry density in lbs./cu.ft. If so, record "M", "M%", "WD" and "DD" at the appropriate locations on the test data form. Also, list any corrections which have been input into the gauge and apply to these calculations. If it is necessary to use count ratios and calibration tables to determine the moisture content, wet density, and dry density, this should be done in accordance with the procedures in the gauge operation manual. Any data calculated in this manner should also be recorded on the test data sheet at the proper location.

(c) Determine from the correction data obtained in Section 7 whether a rock correction is necessary. If so, determine the rock corrected maximum density using the maximum proctor dry density and percent rock according to the Rock Correction Method, ARIZ 227.

(d) The percent of compaction, based on the maximum dry density (corrected, if necessary) is determined and reported to the nearest whole percent.

$$\% \text{ compaction} = \frac{DD \times 100}{MD \text{ or } CMD}$$

Where: MD = Maximum Proctor Dry Density (if no rock correction)
CMD = Corrected Maximum Density (if rock correction is necessary).

NOTE: If a rock correction is not necessary, many current nuclear gauges have the capability to perform all of the other density and moisture calculations internally, with results shown in the display or output to an external printer or computer. Refer to the gauge operation manual to take advantage of all possible gauge options.

REPORT

11. Record the pertinent moisture and density data on the test form along with the test number, location and other information required. An example is given in Figure 1. A blank test form is provided in Figure 2.

ARIZONA DEPARTMENT OF TRANSPORTATION
FIELD DENSITY/MOISTURE OF SOILS BY THE NUCLEAR METHOD
ARIZONA TEST METHOD 235

TRACS Number: H 9999 01C
Project Code: 8888
Date: JAN. 13, 1993
Tested By: JOE DOGOOD
Material Type: EMBANKMENT
Test Number: 22
Proctor Number: EM #1
Material Source: INPLACE
Test Location: S.R. #51, STA. 97+00, 60' LT. E

Project Number: F-099-9(11)
Contractor: BUILD M. GOOD, INC.
Badge Number: 19
Gauge Type: 5001
Gauge Number: 1146
Proctor Type: METHOD A
Lift: 7

STANDARD COUNTS

Density Standard (DS): 3239.4
Moisture Standard (MS): 415.1

FIELD COUNTS

Density Count (DC): 1645.8
Wet Density (WD): 126.7 PCF
Dry Density (DD): 124.0 PCF
Moisture Count (MC): 93.3
Moisture Content (M): 2.7 PCF
Moisture Content (M%): 2.2 %

ROCK CORRECTION [IF NECESSARY] (ARIZ 227)

Wet Wt. of Material (A): 24.72 lb.
Wet Wt. Retained (B): 6.07 lb.
Percent Rock (PR)
PR = (B/A) x 100 = 25 %

TRENCH CORRECTION [IF NECESSARY]

Trench Moist. Stand. (TMS): _____
Trench Moist. Count (TMC): _____
Trench Correction (TC)
TC = TMC - TMS = _____

MOISTURE CORRECTION [IF NECESSARY]

Moisture Correction _____ %
Input into gauge [YES/NO] _____

PROCTOR DATA (ARIZ 225 or 245)

Max. Dry Density (MD): 121.0 PCF
Coarse Agg. Sp. Gr. (SG): 2.609
Optimum Moisture: 11.5 %
Proctor % Rock Retained: 43 %
Corrected Maximum Dry Density (CMD) [For Rock Correction]:

$$CMD = \frac{[(100 - PR) \times (MD)] + [(56.2) \times (PR) \times (SG)]}{100} = 127.4 \text{ PCF}$$

ONE POINT PROCTOR DATA (ARIZ 232 or 246)

Wt. of Mold and Soil (M1) _____ lb
Mold Volume (VM) _____ CF
Moisture Content _____ %
Max. Dry Density (MD) _____ PCF
Wt. of Mold (M2) _____ lb
Wet Density (M1-M2)/VM _____ PCF
Density Curve I.D. _____
Corr. Max. Dry Dens. (CMD) _____ PCF

COMPACTION COMPLIANCE CALCULATION

Required Compaction: 95 %
Pass ✓ Fail _____
Percent Compaction =
(DD x 100)/MD or CMD = 97.3 %

Remarks: _____

Lab Supervisor: TED HEADMAN
Date: 1-13-93

44-1001 10/92

FIGURE 1

ARIZONA DEPARTMENT OF TRANSPORTATION
FIELD DENSITY/MOISTURE OF SOILS BY THE NUCLEAR METHOD
ARIZONA TEST METHOD 235

TRACS Number _____ Project Number _____
Project Code _____ Contractor _____
Date _____ Badge Number _____
Tested By _____ Gauge Type _____
Material Type _____ Gauge Number _____
Test Number _____ Proctor Type _____
Proctor Number _____ Lift _____
Material Source _____
Test Location _____

STANDARD COUNTS

Density Standard (DS) _____ Moisture Standard (MS) _____

FIELD COUNTS

Density Count (DC) _____ Moisture Count (MC) _____
Wet Density (WD) _____PCF Moisture Content (M) _____PCF
Dry Density (DD) _____PCF Moisture Content (M%) _____%

ROCK CORRECTION [IF NECESSARY] (ARIZ 227)

Wet Wt. of Material (A) _____ Percent Rock (PR)
Wet Wt. Retained (B) _____ PR = (B/A) x 100 = _____%

TRENCH CORRECTION [IF NECESSARY]

Trench Moist. Stand. (TMS) _____ Trench Correction (TC)
Trench Moist. Count (TMC) _____ TC = TMC - TMS = _____

MOISTURE CORRECTION [IF NECESSARY]

Moisture Correction _____% Input into gauge [YES/NO] _____

PROCTOR DATA (ARIZ 225 or 245)

Max. Dry Density (MD) _____PCF Optimum Moisture _____%
Coarse Agg. Sp. Gr. (SG) _____ Proctor % Rock Retained _____%
Corrected Maximum Dry Density (CMD) [For Rock Correction]:

$$CMD = \frac{[(100 - PR) \times (MD)] + [(56.2) \times (PR) \times (SG)]}{100} = \_\_\_\_\_ PCF$$

ONE POINT PROCTOR DATA (ARIZ 232 or 246)

Wt. of Mold and Soil (M1) _____lb Wt. of Mold (M2) _____lb
Mold Volume (VM) _____CF Wet Density (M1-M2)/VM _____PCF
Moisture Content _____% Density Curve I.D. _____
Max. Dry Density (MD) _____PCF Corr. Max. Dry Dens. (CMD) _____PCF

COMPACTION COMPLIANCE CALCULATION

Required Compaction _____% Percent Compaction =
Pass _____ Fail _____ (DD x 100)/MD or CMD = _____%

Remarks: _____

Lab Supervisor _____ Date _____

44-1001 10/92

FIGURE 2

DETERMINING pH AND MINIMUM RESISTIVITY OF SOILS AND AGGREGATES

(An Arizona Method)

SCOPE

1. (a) This test method outlines the procedure for determining the pH and minimum resistivity of soil and aggregate materials.

(b) This test method may involve hazardous material, operations, or equipment. This test method does not purport to address all of the safety concerns associated with its use. It is the responsibility of the user to consult and establish appropriate safety and health practices and determine the applicability of any regulatory limitations prior to use.

(c) See Appendix A1 of the Materials Testing Manual for information regarding the procedure to be used for rounding numbers to the required degree of accuracy.

(d) Metric (SI) units and values are shown in this test method with English units and values following in parentheses. Values given for metric and English units may be numerically equivalent (soft converted) for the associated units, or they may be given as rounded or rationalized values (hard converted). Either the metric or English units along with their corresponding values shall be used in accordance with applicable specifications. See Appendix A2 of the Materials Testing Manual for additional information on the metric system.

APPARATUS

2. Requirements for the frequency of equipment calibration and verification are found in Appendix A3 of the Materials Testing Manual. Apparatus for this test procedure shall consist of the following:

(a) Drying apparatus - Any suitable device capable of drying samples at a temperature not exceeding 60 °C (140 °F).

(b) 100 mL glass beaker or other suitable non-metallic container.

(c) 200 mL minimum capacity cylinder graduated in 1 mL increments.

(d) Distilled water.

(e) pH meter and combination probe, both having a relative accuracy of ± 0.05 pH units, minimum. The pH meter must be capable of registering a minimum pH range of 4.0 - 10.0, and be equipped with temperature compensation controls.

(f) Standard buffer solutions of pH values 4.0, 7.0, and 10.0. The expiration date of the solution shall be noted on the container. Solution shall not be used past the expiration date.

(g) Soil box calibrated for use with resistance meter (see Figure 1).

(h) Resistance meter - Instrument to determine resistance (ohms), readable to at least the nearest 10 ohms.

NOTE: The accuracy of the meter shall be established at these measurement levels: 50 ohms, 75 ohms, 125 ohms, 350 ohms, 450 ohms, 750 ohms, and 1500 ohms. The resistance standard(s) will have a tolerance of ± 1%. Any deviation greater than 5% from the known resistance shall require either calibration to within specified limits or the development of a calibration curve. Calibration results shall be recorded, dated, signed, and maintained on file for review.

(i) 2.36 mm (No. 8) sieve conforming to AASHTO Designation M 92.

(j) A balance or scale capable of measuring the maximum weight to be determined and conforming to the requirements of AASHTO M 231, except the readability and sensitivity of any balance or scale utilized shall be at least 1 gram.

(k) Thermometer. - A thermometer accurate to 0.5 °C (1 °F).

(l) Miscellaneous mixing tools and pans.

SAMPLE PREPARATION

3. Prepare the sample according to the following procedure:

(a) The soil sample as received from the field shall be dried thoroughly in air or the drying apparatus at a temperature not exceeding 60 °C (140 °F).

(b) A representative test sample of approximately 2000 grams shall then be obtained by splitting or quartering.

(c) Screen the test sample through a 2.36 mm (No. 8) sieve.

(d) From the screened pass 2.36 mm (No. 8) material, split out approximately 1500 grams for the resistivity test and approximately 50 grams for the pH test.

(e) Place the pH sample in the 100 mL beaker and add an equal weight of distilled water. Stir until well mixed and then stir at regular intervals of 8 to 10 minutes for an hour.

(f) The temperature of the standard buffer solutions must be within 10 °C of the pH sample. Also, temperatures of the standard buffer solutions and the pH sample must be within the manufacturer's recommended temperature compensation range of the pH meter.

(g) Place the resistivity sample in a mixing bowl. Add approximately 200 mL of distilled water to moisten the sample and mix thoroughly.

TEST PROCEDURE FOR pH

4. (a) Per the manufacturer's instructions, standardize the pH meter using two of the standard buffer solutions: 7.0 and either 4.0 or 10.0, <u>whichever is nearest to the estimated pH of the sample</u>.

(b) For <u>each</u> standard buffer solution, measure its temperature and adjust the temperature controller of the pH meter <u>before</u> testing for the standard solution pH value. This may not be needed on meters with automatic temperature compensation; follow manufacturer's instructions.

(c) Stir the slurry mixture mixture in the 100 mL beaker. Measure the temperature of the slurry and adjust the temperature controller of the pH meter <u>before</u> testing for the pH value of the slurry. This may not be needed on meters with automatic temperature compensation; follow manufacturer's instructions.

(d) Carefully insert the pH probe in the slurry mixture. Determine the pH reading when the meter reading stabilizes.

(e) If the pH reading is unstable when the electrode is immersed in the soil slurry, leave the electrode immersed until the pH reading has stabilized. In some cases, the waiting period for stabilization of the pH reading may take up to 5 minutes.

(f) Record the pH value of the soil mixture, to the nearest tenth.

TEST PROCEDURE FOR MINIMUM RESISTIVITY

5. (a) Place moistened soil in calibrated soil box, compact lightly with fingers and level off the top with a straightedge. Connect the resistance meter to the side terminals of the box. Determine resistance as per manufacturers instructions and record the resistance to the nearest 10 ohms.

(b) Empty the soil back into the mixing bowl and add 50 mL of distilled water at room temperature and mix until all the water is dispersed uniformly through the soil.

(c) Clean the soil box by rinsing with distilled water after each test application.

(d) Fill the soil box by lightly hand compacting the wet soil, making sure that the soil completely fills the box. Level off the top of the hand compacted sample with a straightedge. Connect the resistance meter to the box. Read and record the resistance.

(e) Repeat the above procedure, adding distilled water in increments of 50 mL. Insure that each addition of water is dispersed evenly through the sample. The resistance readings should decrease for several readings before an increase is noted. The lowest resistance reading before an increase will be the reading to use for calculating the minimum resistivity of the soil.

CALCULATIONS FOR MINIMUM RESISTIVITY

6. The calculations for minimum resistivity are performed as follows:

(a) Determine the length and width of the electrodes to the nearest 1 mm.

(b) The soil box factor, S.B.F., expressed to the nearest 0.01 centimeter, is determined by the following equation:

$$S.B.F. = \frac{A}{D} \times 0.10$$

Where: A = Area of one electrode, mm^2
D = Distance between electrodes, mm

Example: (For electrodes having a length of 152 mm and a width of 45 mm, and at a distance between electrodes of 102 mm.)

A = 152 mm x 45 mm = 6840 mm^2
D = 102 mm

$$S.B.F. = \frac{6840}{102} \times 0.10 = 6.71 \text{ cm}$$

(b) The minimum resistivity is determined by the following equation:

Minimum Resistivity (ohm-cm) = (Resistance, ohms) x (Soil Box Factor, cm)

Example: (For a resistance reading of 480 ohms and a soil box factor of 6.71cm.)

Minimum Resistivity = (480 ohms) x (6.71 cm)
= 3220.8 ohm-cm
= 3221 ohm-cm

(c) The minimum resistivity value is reported to the nearest whole number.

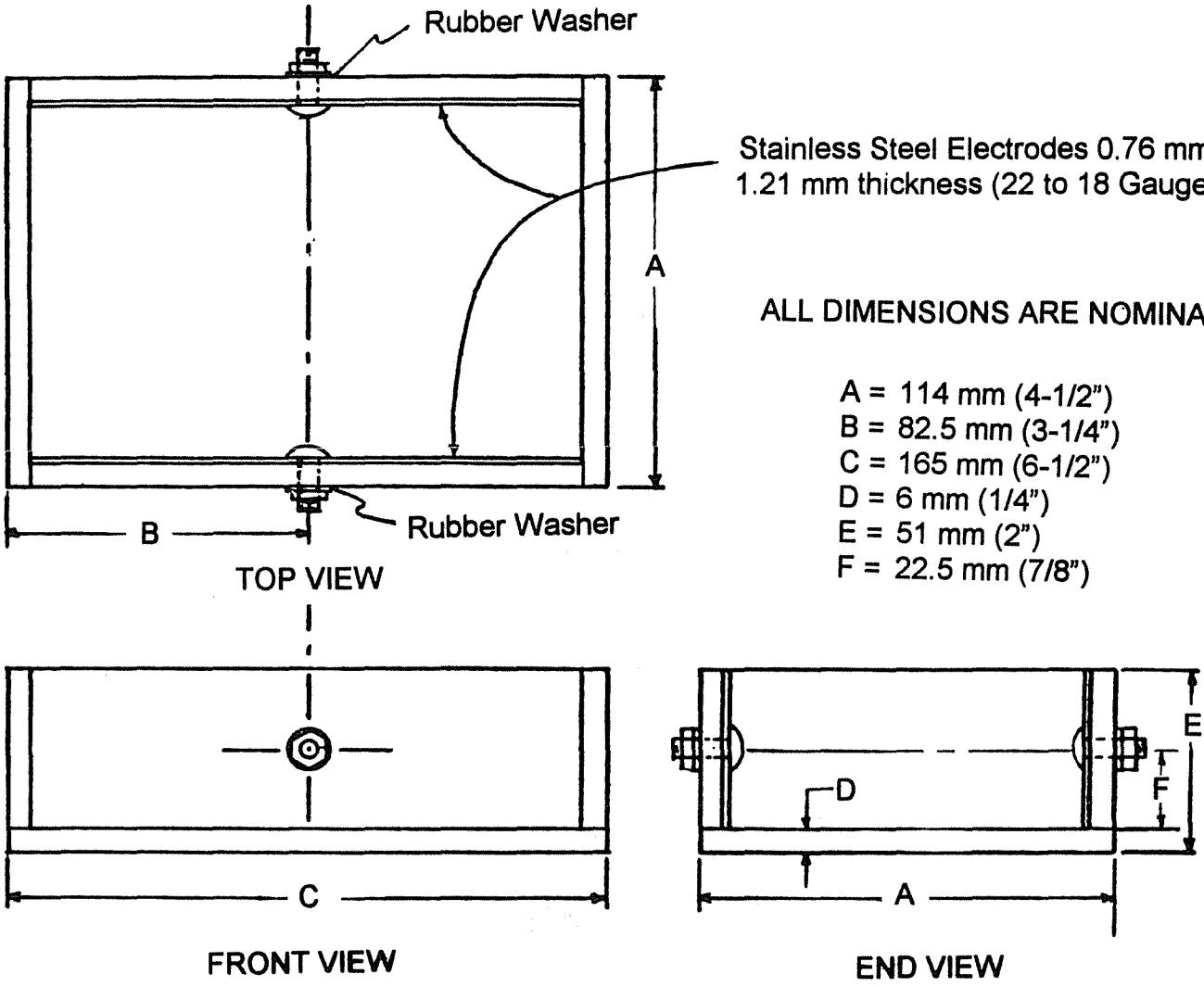

ALL DIMENSIONS ARE NOMINAL

A = 114 mm (4-1/2")
B = 82.5 mm (3-1/4")
C = 165 mm (6-1/2")
D = 6 mm (1/4")
E = 51 mm (2")
F = 22.5 mm (7/8")

Box Material [6 mm (1/4") Plastic]
- Bottom - 1 piece: 165 mm x 114 mm x 6 mm (6-1/2" x 4-1/2" x 1/4")
- Ends - 2 pieces: 114 mm x 45 mm x 6 mm (4-1/2" x 1-3/4" x 1/4")
- Sides - 2 pieces: 152 mm x 45 mm x 6 mm (6" x 1-3/4" x 1/4")

Electrodes [0.76 mm to 1.21 mm thickness (22 to 18 Gauge) Stainless Steel]
2 pieces: 152 mm x 45 mm (6" x 1-3/4")

Hardware - 2 each No. 8-32 x 3/4", or metric equivalent, Stainless Steel or Brass Machine Screw with Washer and Nut

Gasket - Rubber Washer

FIGURE 1

DETERMINING pH AND SOLUBLE SALTS OF SOILS

(An Arizona Method)

SCOPE

1. (a) This test method describes the procedure for determining the pH and soluble salts content of soils.

(b) This test method may involve hazardous material, operations, or equipment. This test method does not purport to address all of the safety concerns associated with its use. It is the responsibility of the user to consult and establish appropriate safety and health practices and determine the applicability of any regulatory limitations prior to use.

(c) See Appendix A1 of the Materials Testing Manual for information regarding the procedure to be used for rounding numbers to the required degree of accuracy.

(d) Metric (SI) units and values are shown in this test method with English units and values following in parentheses. Values given for metric and English units may be numerically equivalent (soft converted) for the associated units, or they may be given as rounded or rationalized values (hard converted). Either the metric or English units along with their corresponding values shall be used in accordance with applicable specifications. See Appendix A2 of the Materials Testing Manual for additional information on the metric system.

APPARATUS

2. Requirements for the frequency of equipment calibration and verification are found in Appendix A3 of the Materials Testing Manual. Apparatus for this test procedure shall consist of the following:

(a) Drying apparatus. - Any suitable device capable of drying samples at a temperature not exceeding 60 °C (140 °F).

(b) 100 mL glass beaker or other suitable non-metallic container.

(c) 250 mL glass beaker or other suitable non-metallic container.

(d) 200 mL minimum capacity cylinder graduated in 1 mL increments.

(e) Richards or Buchner funnel.

(f) Vacuum source.

(g) Conductance meter.

(h) Conductivity cell (Cell constant = 1.0/centimeter preferred).

(i) Distilled water.

(j) pH meter and combination probe, both having a relative accuracy of ± 0.05 pH units, minimum. The pH meter must be capable of registering a minimum pH range of 4.0 - 10.0, and be equipped with temperature compensation controls.

(k) Standard buffer solutions of pH values 4.0, 7.0, and 10.0. The expiration date of the solution shall be noted on the container. Solution shall not be used past the expiration date.

(l) 2.36 mm (No. 8) sieve conforming to AASHTO Designation M 92.

(m) A balance or scale capable of measuring the maximum weight to be determined and conforming to the requirements of AASHTO M 231, except the readability and sensitivity of any balance or scale utilized shall be at least 1 gram.

(n) Thermometer. - A thermometer accurate to 0.5 °C (1 °F).

(o) Miscellaneous mixing tools and pans.

SAMPLE PREPARATION

3. Prepare the sample according to the following procedure:

(a) The soil sample as received from the field shall be dried thoroughly in air or the drying apparatus at a temperature not exceeding 60 °C (140 °F).

(b) A representative test sample of approximately 500 grams shall then be obtained by splitting or quartering.

(c) Screen the test sample through a 2.36 mm (No. 8) sieve.

(d) From the screened pass 2.36 mm (No. 8) material, split out approximately 250 grams for the soluble salts test and approximately 50 grams for the pH test.

(e) Place the pH sample in the 100 mL beaker and add an equal weight of distilled water. Stir until well mixed and then stir at regular intervals of 8 to 10 minutes for an hour.

(f) The temperature of the standard buffer solutions must be within 10 °C of the pH sample. Also, temperatures of the standard buffer solutions and the pH sample must be within the manufacturer's recommended temperature compensation range of the pH meter.

(g) Prepare a saturated soil paste from the soluble salts test sample by placing the soil in the 250 mL beaker. Begin adding distilled water and stirring with a spatula. From time to time tap the container on a work bench to consolidate the soil-water mixture. At saturation, the soil paste glistens as it reflects light, flows slightly when the container is tipped, and slides freely and cleanly off the spatula except for soils containing much clay. Allow the sample to stand overnight and then recheck the preceding criteria for saturation. Free water should not collect on the soil surface nor should the paste stiffen markedly or lose its glistening appearance on standing. If this occurs, remix with more water.

TEST PROCEDURE FOR pH

4. (a) Per the manufacturer's instructions, standardize the pH meter using two of the standard buffer solutions: 7.0 and either 4.0 or 10.0, <u>whichever is nearest to the estimated pH of the sample</u>.

(b) For <u>each</u> standard buffer solution, measure its temperature and adjust the temperature controller of the pH meter <u>before</u> testing for the standard solution pH value. This may not be needed on meters with automatic temperature compensation; follow manufacturer's instructions.

(c) Stir the slurry mixture mixture in the 100 mL beaker. Measure the temperature of the slurry and adjust the temperature controller of the pH meter <u>before</u> testing for the pH value of the slurry. This may not be needed on meters with automatic temperature compensation; follow manufacturer's instructions.

(d) Carefully insert the pH probe in the slurry mixture. Determine the pH reading when the meter reading stabilizes.

(e) If the pH reading is unstable when the electrode is immersed in the soil slurry, leave the electrode immersed until the pH reading has stabilized. In some cases, the waiting period for stabilization of the pH reading may take up to 5 minutes.

(f) Record the pH value of the soil mixture, to the nearest tenth.

TEST PROCEDURE FOR SOLUBLE SALTS

5. Transfer the saturated soil paste to a filter funnel with a filter paper in place and apply vacuum until air begins to pass through the filter. Collect the extract in a bottle or test tube. Determine the temperature of the extract. Insert the conductivity cell into the extract, and determine electrical conductance. If the conductance falls above the highest range on the conductance meter, dilute the extract to one-tenth its original concentration of salts by diluting one part extract with 9 parts of distilled water. (The conductance reading obtained on the diluted extract must then be multiplied by ten since the conductance of the diluted extract is one-tenth the conductance of the original extract.)

CALCULATIONS FOR SOLUBLE SALTS

6. (a) If conductance reading was taken in units other than microsiemens, convert it to conductance in microsiemens. For example, if reading was taken in millisiemens, multiply the reading by 1000 to convert to conductance in microsiemens.

(b) Convert conductance to electrical conductivity, expressed as microsiemens per centimeter, by multiplying by the cell constant.

(c) Correct the conductivity at the test temperature to conductivity at 25°C (77 °F), by the following formula:

$$EC_{25} = (EC) \times (f_t)$$

Where: EC_{25} = Electrical conductivity (microsiemens/cm), corrected for 25 °C.
EC = Electrical conductivity (microsiemens/cm), at test temperature.
f_t = Factor obtained from Figure 1.

(d) Calculate the soluble salts content in parts per million (ppm) by the following formula:

$$\text{Soluble Salts (ppm)} = (EC_{25}) \times (0.64)$$

(e) Report the soluable salts to the nearest 10 ppm.

°C	°F	f_t	°C	°F	f_t	°C	°F	f_t
3.0	37.4	1.709	22.0	71.6	1.064	29.0	84.2	0.925
4.0	39.2	1.660	22.2	72.0	1.060	29.2	84.6	0.921
5.0	41.0	1.613	22.4	72.3	1.055	29.4	84.9	0.918
6.0	42.8	1.569	22.6	72.7	1.051	29.6	85.3	0.914
7.0	44.6	1.528	22.8	73.0	1.047	29.8	85.6	0.911
8.0	46.4	1.488	23.0	73.4	1.043	30.0	86.0	0.907
9.0	48.2	1.448	23.2	73.8	1.038	30.2	86.4	0.904
10.0	50.0	1.411	23.4	74.1	1.034	30.4	86.7	0.901
11.0	51.8	1.375	23.6	74.5	1.029	30.6	87.1	0.897
12.0	53.6	1.341	23.8	74.8	1.025	30.8	87.4	0.894
13.0	55.4	1.309	24.0	75.2	1.020	31.0	87.8	0.890
14.0	57.2	1.277	24.2	75.6	1.016	31.2	88.2	0.887
15.0	59.0	1.247	24.4	75.9	1.012	31.4	88.5	0.884
16.0	60.8	1.218	24.6	76.3	1.008	31.6	88.9	0.880
17.0	62.6	1.189	24.8	76.6	1.004	31.8	89.2	0.877
18.0	64.4	1.163	25.0	77.0	1.000	32.0	89.6	0.873
18.2	64.8	1.157	25.2	77.4	0.996	32.2	90.0	0.870
18.4	65.1	1.152	25.4	77.7	0.992	32.4	90.3	0.867
18.6	65.5	1.147	25.6	78.1	0.988	32.6	90.7	0.864
18.8	65.8	1.142	25.8	78.5	0.983	32.8	91.0	0.861
19.0	66.2	1.136	26.0	78.8	0.979	33.0	91.4	0.858
19.2	66.6	1.131	26.2	79.2	0.975	34.0	93.2	0.843
19.4	66.9	1.127	26.4	79.5	0.971	35.0	95.0	0.829
19.6	67.3	1.122	26.6	79.9	0.967	36.0	96.8	0.815
19.8	67.6	1.117	26.8	80.2	0.964	37.0	98.6	0.801
20.0	68.0	1.112	27.0	80.6	0.960	38.0	100.2	0.788
20.2	68.4	1.107	27.2	81.0	0.956	39.0	102.2	0.775
20.4	68.7	1.102	27.4	81.3	0.953	40.0	104.0	0.763
20.6	69.1	1.097	27.6	81.7	0.950	41.0	105.8	0.750
20.8	69.4	1.092	27.8	82.0	0.947	42.0	107.6	0.739
21.0	69.8	1.087	28.0	82.4	0.943	43.0	109.4	0.727
21.2	70.2	1.082	28.2	82.8	0.940	44.0	111.2	0.716
21.4	70.5	1.078	28.4	83.1	0.936	45.0	113.0	0.705
21.6	70.9	1.073	28.6	83.5	0.932	46.0	114.8	0.694
21.8	71.2	1.068	28.8	83.8	0.929	47.0	116.6	0.683

FIGURE 1

PERCENT CARBONATES IN AGGREGATE

(An Arizona Method)

SCOPE

1. (a) This test method describes the procedure for determining the percentage of carbonates in aggregate. A combination of hydrogen peroxide and nitric acid is used to react with the carbonates.

(b) This test method involves hazardous material, operations, and equipment. This test method does not purport to address all of the safety concerns associated with its use. It is the responsibility of the user to consult and establish appropriate safety and health practices and determine the applicability of regulatory limitations prior to use.

(c) See Appendix A1 of the Materials Testing Manual for information regarding the procedure to be used for rounding numbers to the required degree of accuracy.

(d) Metric (SI) units and values are shown in this test method with English units and values following in parentheses. Values given for metric and English units may be numerically equivalent (soft converted) for the associated units, or they may be given as rounded or rationalized values (hard converted). Either the metric or English units along with their corresponding values shall be used in accordance with applicable specifications. See Appendix A2 of the Materials Testing Manual for additional information on the metric system.

APPARATUS AND MATERIALS

2. Requirements for the frequency of equipment calibration and verification are found in Appendix A3 of the Materials Testing Manual. Apparatus and materials for this test procedure shall consist of the following:

(a) Drying apparatus - Any suitable device capable of drying samples at a temperature of 110 ± 5 °C (230 ± 9 °F).

(b) 1000 mL heavy duty beaker.

(c) Hydrogen Peroxide (3% solution) - H_2O_2.

(d) Nitric Acid (concentrated) - HNO_3.

(e) Distilled water.

(f) A balance or scale capable of measuring the maximum weight to be determined and conforming to the requirements of AASHTO M 231, except the readability and sensitivity of any balance or scale utilized shall be at least 0.1 gram.

(g) Neutral Litmus Paper.

(h) Glass or Plastic Stirring Rod.

SAMPLE PREPARATION

3. Prepare the sample according to the following:

(a) For material samples from stockpile(s), obtain a representative 300 ± 10 gram sample of plus 4.75 mm (No. 4) material. Wash the sample over a 4.75 mm (No. 4) sieve and discard minus 4.75 mm (No. 4) material.

(b) For uncrushed material samples, obtain a representative sample and crush to appropriate grading. Obtain a representative 300 ± 10 gram sample of plus 4.75 mm (No. 4) material. Wash the sample over a 4.75 mm (No. 4) sieve and discard minus 4.75 mm (No. 4) material.

(c) The prepared sample shall be oven dried to constant weight at 110 ± 5 °C (230 ± 9 °F).

TEST PROCEDURE

4. (a) Allow sample to cool and place in a tared 1000 mL beaker. Weigh and record the weight of aggregate as the "weight of original sample" or "A" to the nearest 0.1 gram.

(b) Under a fume hood, add approximately 300 mL of H_2O_2 (3% solution) and stir. When the bubbling subsides, begin adding small amounts (approximately 10 mL) of concentrated HNO_3 to the beaker. Bubbling will be vigorous as the carbonates are being dissolved. Stir occasionally.

(c) When the bubbling has ceased and addition of HNO_3 causes no more bubbles, begin to wash by decantation, using distilled water. Care shall be taken not to lose any of the coarse aggregate. Wash by decantation at least 4 times. At this point, neutral litmus paper in the water should show only slight pink.

(d) Decant the water and oven dry to constant weight at 110 ± 5 °C (230 ± 9 °F).

(e) Let cool, weigh, and record the weight of aggregate as the "weight of non-reactive aggregate" or "B" to the nearest 0.1 gram.

CALCULATIONS

5. (a) Calculate the percent of carbonates as follows:

$$\text{Percent of Carbonates} = \frac{A - B}{A} \times 100$$

Where: A = weight of original sample
B = weight of non-reactive aggregate

(b) Report the percent of carbonates to the nearest 1%.

SIEVE ANALYSIS AND SEPARATION OF SALVAGED AC PAVEMENT PARTICLES FOR RECYCLED ASPHALTIC CONCRETE

(An Arizona Method)

SCOPE

1. (a) This procedure provides a method for separation and sieve analysis of salvaged asphaltic concrete pavement particles which are obtained by crushing, milling, or other processes which renders particles which are to be used in the design and/or construction of recycled asphaltic concrete pavement.

(b) This test method may involve hazardous material, operations, or equipment. This test method does not purport to address all of the safety concerns associated with its use. It is the responsibility of the user to consult and establish appropriate safety and health practices and determine the applicability of any regulatory limitations prior to use.

(c) See Appendix A1 of the Materials Testing Manual for information regarding the procedure to be used for rounding numbers to the required degree of accuracy.

(d) Metric (SI) units and values are shown in this test method with English units and values following in parentheses. Values given for metric and English units may be numerically equivalent (soft converted) for the associated units, or they may be given as rounded or rationalized values (hard converted). Either the metric or English units along with their corresponding values shall be used in accordance with applicable specifications. See Appendix A2 of the Materials Testing Manual for additional information on the metric system.

APPARATUS

2. Requirements for the frequency of equipment calibration and verification are found in Appendix A3 of the Materials Testing Manual. Apparatus for this test procedure shall consist of necessary splitting equipment, sieves for the coarse screening of the materials, shaker, balance, and other miscellaneous items as specified in Arizona Test Method 201.

PROCEDURE

3. A representative sample of salvaged pavement particles is subjected to coarse sieving in accordance with Arizona Test Method 201, except the following:

(a) If separated material is to be used in the design of a recycled mix, the entire nest of coarse [4.75 mm (No. 4) and larger] sieves shall be used. The material is subjected to shaking for 5 minutes ± 15 seconds.

b) If separation of material on a particular sieve size is desired, for example, the 9.5 mm (3/8 inch) sieve, enough larger size sieves shall be used to prevent overloading of the desired sieve size. The material is subjected to shaking for 5 minutes ± 15 seconds, and the material retained on each sieve is combined.

NOTE: The use of a specified time of shaking provides for a control on the "breaking down" of the particles of salvaged material into smaller size fractions. A sieving to completion is not attempted in this procedure.

SIEVE ANALYSIS

4. The sieve analysis on the separation of particles is performed as specified in Arizona Test Method 201.

COMPRESSIVE STRENGTH OF MOLDED CEMENT TREATED BASE OR SOIL-CEMENT SPECIMENS

(An Arizona Method)

SCOPE

1. This test method is used to determine the unconfined compressive strength of cement treated base or soil-cement specimens.

APPARATUS

2. Three split ring molds shall be used. Refer to AASHTO T 134 for other applicable apparatus. AASHTO T 134, Section 2.1.1, shall be modified as follows; a 4 inch mold having a capacity of 1/30th ± 0.003 of a cubic foot with an internal diameter of 4.00 ± 0.16 inch.

SAMPLE PREPARATION

3. (a) A representative sample of approximately 10 kg. shall be obtained in a random manner from the completed mixture prior to final compaction, and immediately placed in an air-tight container. Not more than 90 minutes shall lapse between the time of mixing and the final mold fabrication.

(b) Sieve material over 3/4" sieve and discard plus 3/4" material.

FABRICATION

4. Three specimens shall be promptly fabricated, following the procedure below:

(a) Compact the mixture in the mold, with the collar attached, in three equal layers so as to give a total compacted depth of about 5 inches. The top of the first and second layers shall be scratched to aid in bonding to subsequent layer. Compact each layer by 25 blows from the rammer dropping from a height of 12 inches. The blows shall be uniformly distributed over the surface of the layer being compacted. During compaction, the mold shall rest on a uniform, rigid foundation.

(b) Following compaction, remove the extension collar, carefully trim the compacted mixture even with the top of the mold by means of a knife and straightedge. During the trimming operation, remove all particles that extend above the top level of the mold. Correct all irregularities in the surface by hand tamping fine material into these irregularities and leveling the specimen again with the straightedge, spraying with a fine mist of water as necessary to maintain specimen surface in a moist condition.

(c) Remove specimens from molds, taking proper care in removing the specimens so that the shape of the molded specimens is maintained. To assure that specimens are in a moist condition they may be sprayed with a fine mist of water upon demolding, and promptly placed in the curing environment.

CURING

5. (a) The specimens shall be cured at 100% humidity between 65°F and 80°F for six days. The specimens shall be protected from direct contact with free water to prevent saturation and/or leaching of cementitious material from the specimen.

(b) If the specimens are fabricated where a "fog" room is not available, the curing is to be accomplished by surrounding the specimens with pre-saturated warm "Zonolite" or other satisfactory material in a sealed container. This sealed container shall be promptly placed in a 65°F to 80°F environment.

(c) After six days the specimens shall be immersed in saturated lime water at 65°F to 80°F for 24 hours.

COMPRESSIVE STRENGTH

6. (a) Carefully remove the specimens from the water and towel dry. Due to the fragility of the specimens they must be handled carefully to assure that they are not damaged. Determine the diameter of each test specimen to the nearest 0.01 inch by averaging two diameter determinations measured at right angles to each other at midheight of the specimen. The specimens shall be capped in accordance with AASHTO T-231, and broken immediately after capping.

(b) Place each specimen on the bearing block of the compression machine and center it under the loading head.

(c) Continuously apply a uniform load to the specimen at the rate of 0.05 ± 0.01 inches per minute for the screw type testing machines, or 20 to 50 psi/sec for the hydraulically operated machines until failure is noted or the continued application of pressure results in no increase in load. Record the load at failure and convert to psi using diameter determined in paragraph (a) above. The average of the three results shall constitute one test value for purposes of compressive strength specification compliance.

REPORT

7. Record the load failure point and compressive strength in psi for each specimen, and the average compressive strength for the three specimens.

SAND EQUIVALENT TEST FOR MINERAL AGGREGATE FOR ASPHALTIC CONCRETE FRICTION COURSE

(A Modification of AASHTO T 176)

This test procedure is the same as specified in AASHTO T 176, except:

1. The following is added: "This procedure is used for determining the sand equivalent value for mineral aggregate to be used in ACFC. The mineral aggregate gradation requirements for ACFC yield a large percentage of material which passes the 4.75 mm (No. 4) sieve and is retained on the 2.36 mm (No. 8) sieve. Due to the amount of material retained on the 2.36 mm (No. 8), the sand equivalent test, when performed as outlined in AASHTO T 176, utilizing minus 4.75 mm (No. 4) material does not lend itself to testing the mineral aggregate required for ACFC."

2. The following is added: "This test method may involve hazardous material, operations, or equipment. This test method does not purport to address all of the safety concerns associated with its use. It is the responsibility of the user to consult and establish appropriate safety and health practices and determine the applicability of any regulatory limitations prior to use."

3. The following is added: "See Appendix A1 of the Materials Testing Manual for information regarding the procedure to be used for rounding numbers to the required degree of accuracy."

4. The following is added: "Metric (SI) units and values are shown in this test method with English units and values following in parentheses. Values given for metric and English units may be numerically equivalent (soft converted) for the associated units, or they may be given as rounded or rationalized values (hard converted). Either the metric or English units along with their corresponding values shall be used in accordance with applicable specifications. See Appendix A2 of the Materials Testing Manual for additional information on the metric system.

5. The following is added: "Requirements for the frequency of equipment calibration and verification are found in Appendix A3 of the Materials Testing Manual."

6. In Section 4, "Sample Preparation", all references to "4.75 mm (No. 4) sieve" shall be replaced by "2.36 mm (No. 8) sieve."

ARTIFICIAL GRADING OF MINERAL AGGREGATE

(An Arizona Method)

Scope

1. This method may be utilized to adjust composites of mineral aggregate by artificially grading the material to meet desired target values for specified screens.

Preparation of Pass No. 4 Sieve Size Samples

2. After samples of each stockpile or bin have been separated into individual sizes of Plus No. 4 and larger, and Pass No. 4 material by coarse sieving as described in ARIZ 201 the Pass No. 4 material is processed by the following procedures. Figure 1 gives an illustration of the steps necessary which may prove helpful in understanding the procedure.

(a) For each stockpile or bin of mineral aggregate the Pass No. 4 material is separated into No. 8 and Pass No. 8 fractions and weights recorded for each.

(b) The Pass No. 8 fractions for each stockpile or bin are proportionately combined and thoroughly blended together.

NOTE: It is important that the material be completely and accurately sieved into the three separate size fractions.

(c) The combined Pass No. 8 material is screened over a series of sieves which includes a No. 8, No. 40, No. 200 sieve, and other intermediate sizes as necessary to prevent overloading individual sieves.

(d) Material which passes the No. 8 sieve and is retained on the No. 40 sieve and any intermediate sieves is combined and saved.

(e) Material which passes the No. 40 sieve and is retained on the No. 200 sieve and any intermediate sieves is combined and saved.

(f) The material passing the No. 200 sieve is also saved.

(g) An approximate 500 gram sample is obtained from the fraction of material which is Pass No. 8 to Retained No. 40, and another approximate 500 gram sample is obtained from the fraction of material which is Pass No. 40 to Retained No. 200.

(h) Each of the samples are subjected to elutriation and fine screening as specified in ARIZ 201, Section 6 or 7, and 8. The sieve analysis of each is determined in accordance with Section 11 of ARIZ 201, except the % passing each sieve is determined and recorded to the nearest 0.01%.

(i) From the elutriation and fine screening of the Pass No. 8 to Retained No. 40 fraction, the % passing the No. 40 sieve and larger than the No. 200 sieve is determined (% Pass No. 200 subtracted from % Pass No. 40), and recorded as "a". The % passing the No. 200 sieve is recorded as "b".

Example:

Sieve size	% Passing
# 8	100
# 40	0.34
# 200	0.25

"a" = (0.34 - 0.25) = 0.09%
"b" = 0.25%

(j) From the elutriation and fine screening of the Pass No. 40 to Retained No. 200 fraction, the % passing No. 200 sieve is recorded as "c".

Example:

Sieve Size	% Passing
# 40	100
# 200	1.32

"c" = 1.32%

NOTE: The size fractions used above for artificial grading and throughout this method are based on meeting desired values for % passing the No. 8, No. 40 and No. 200 sieves. If other or additional sieves are used in artificial grading or adjusting the composite, the procedures of this test method will apply, with appropriate modifications.

Procedure for Adjusting Composite for Pass No. 8 Material

3. The composite of mineral aggregate for Pass No. 8 material is then adjusted to meet desired values. The Pass No. 8 to Retained No. 40 fraction from screening has material clinging to it which will contribute to Pass No. 40 to Retained No. 200 and Pass No. 200 material in the adjusted composite, and the Pass No. 40 to Retained No. 200 fraction from screening has material clinging to it which will contribute to the Pass No. 200 material in the adjusted composite. The procedure below uses results from the elutriation and the fine screening of material from each fraction of material to account for the total contribution to each desired size. Figure 2 provides an illustration which may be useful in understanding the

method. The calculations outlined below are utilized to determine the % of each size fraction from screening that is necessary to be used to obtain desired values. An example is provided with the method for each calculation. The illustration in paragraph (h) is a tabulation of the results for the example provided and should be referred to as the procedure is followed to understand the contributions to each desired value from the individual fractions of material.

(a) The amount of Pass No. 8 to Retained No. 40 material for the desired gradation is determined, (% Pass No. 40 subtracted from % Pass No. 8) and recorded as "d". The amount of Pass No. 40 to Retained No. 200 material for the desired gradation is determined, (% Pass No. 200 subtracted from % Pass No. 40), and recorded as "e". The amount of Pass No. 200 for the desired gradation is recorded as "f".

Example:

Sieve Size	Composite Gradation % Pass Values	Desired Gradation % Pass Values
# 8	45	48
# 40	21	18
# 200	6.5	5.7

"d" = (48 - 18) = 30 %
"e" = (18 - 5.7) = 12.3%
"f" = 5.7%

(b) The percent of the Pass No. 8 to Retained No. 40 fraction of material necessary to be utilized to obtain the desired adjusted % Pass No. 8 is determined and recorded as "g".

$$\text{"g"} = (d) \times \left[1 + \frac{a + b}{100} \right]$$

Example:

$$\text{"g"} = (30) \times \left[1 + \frac{0.09 + 0.25}{100} \right] = 30.10\%$$

(c) The proportional amounts of Pass No. 40 to Retained No. 200, and Pass No. 200 material which are in the Pass No. 8 to Retained No. 40 fraction, and which need to be accounted for in the adjusted composite are determined and recorded as "h" and "i" respectively:

$$\text{"h"} = (g - d) \times \left[\frac{a}{a + b} \right]$$

$$\text{"i"} = (g - d) \times \left[\frac{b}{a + b} \right]$$

Example:

$$\text{"h"} = (30.10 - 30) \times \left[\frac{0.09}{0.09 + 0.25}\right] = 0.03\%$$

$$\text{"i"} = (30.10 - 30) \times \left[\frac{0.25}{0.09 + 0.25}\right] = 0.07\%$$

(d) The amount of Pass No. 40 to Retained No. 200 material from the Pass No. 40 to Retained No. 200 fraction that is required to give the desired value for Pass No. 40 to Retained No. 200 in the adjusted composite is determined and recorded as "j":

$$\text{"j"} = (e - h)$$

Example:

$$\text{"j"} = (12.3 - 0.03) = 12.27\%$$

NOTE: The sum of the contributions to the Pass No. 8 to Retained No. 40, "h" + "j", will equal the total amount desired in the adjusted composite, "e".

(e) The percent of the Pass No. 40 to Retained No. 200 fraction of material, necessary to be utilized to obtain the desired value for Pass No. 40 to Retained No. 200 is determined and recorded as "k":

$$\text{"k"} = (j) \times \left[1 + \frac{c}{100}\right]$$

Example:

$$\text{"k"} = (12.27) \times \left[1 + \frac{1.32}{100}\right] = 12.43\%$$

(f) The amount of Pass No. 200 material which is in the Pass No. 40 to Retained No. 200 fraction, and which needs to be accounted for in the adjusted composite is determined and recorded as "l":

$$\text{"l"} = (k - j)$$

Example:

$$\text{"l"} = (12.43 - 12.27) = 0.16\%$$

(g) The percent of Pass No. 200 material necessary to be utilized to obtain the desired % Pass No. 200 is determined and recorded as "m":

"m" = (f - i - l)

Example:

"m" = (5.7 - 0.07 - 0.16) = 5.47%

NOTE: The sum of the contributions to the % Pass No. 200 material, "i" + "l" + "m", will equal the total amount desired in the adjusted composite, "f".

(h) The following illustration shows the contributions to the adjusted composite from each of the size fractions:

	Pass #8 to Ret. #40 Fraction	Pass #40 to Ret. #200 Fraction	Pass #200 Fraction	Desired Values
% Pass #8 to Ret. #40	30 (d)			30 (d)
% Pass #40 to Ret. #200	0.03(h)	12.27(j)		12.3 (e)
% Pass #200	0.07(i)	0.16(l)	5.47(m)	5.7 (f)
% of each size fraction to be used to obtain desired values	30.10(g)	12.43(k)	5.47(m)	

(i) The percentages of each size fraction which are to be used in the adjusted composite to meet desired values are recorded:

Example:

Pass No. 8 to Retained No. 40 = 30.10%
Pass No. 40 to Retained No. 200 = 12.43%
Pass No. 200 = 5.47%

Procedure for Adjusting Composite for Plus No. 8 Material

4. The composite is adjusted for the Plus No. 8 material to obtain desired % pass values for each size.

(a) The % retained for each sieve size for the desired adjusted composite is divided by the corresponding % retained value for each sieve size in the stockpile or bin composite. This value is multiplied by the individual fractions of that size for each stockpile or bin. This will give an adjusted amount of each size fraction in the stockpile or bin composite which will be the gradation of the desired composite. An example of this for a composite for an asphaltic concrete mix design is shown in Figure 3.

Checking Adjusted Composite

5. A sample of appropriate size as specified in ARIZ 201, for the maximum aggregate size, is prepared for the adjusted composite using material from the individual size fractions for Plus No. 8 material, the Pass No. 8 to Retained No. 40 fraction, the Pass No. 40 to Retained No. 200 fraction, and the Pass No. 200 fraction. This sample is subjected to ARIZ 201 and the resultant gradation compared to the desired gradation.

Preparing Samples Using Material from Artificial Grading

6. The samples necessary are prepared and weighed up for testing utilizing the adjusted composite.

(a) For the Plus No. 8 material, the individual size fractions from the adjusted composite for each stockpile or bin are utilized to prepare samples.

(b) For Pass No. 8 material the amount of each fraction for Pass No. 8 to Retained No. 40, Pass No. 40 to Retained No. 200, and Pass No. 200 from the adjusted composite is utilized to prepare samples.

(c) A weigh up sheet which is used for asphaltic concrete mix designs, which illustrates the use of the adjusted composite fractions is shown in Figure 4.

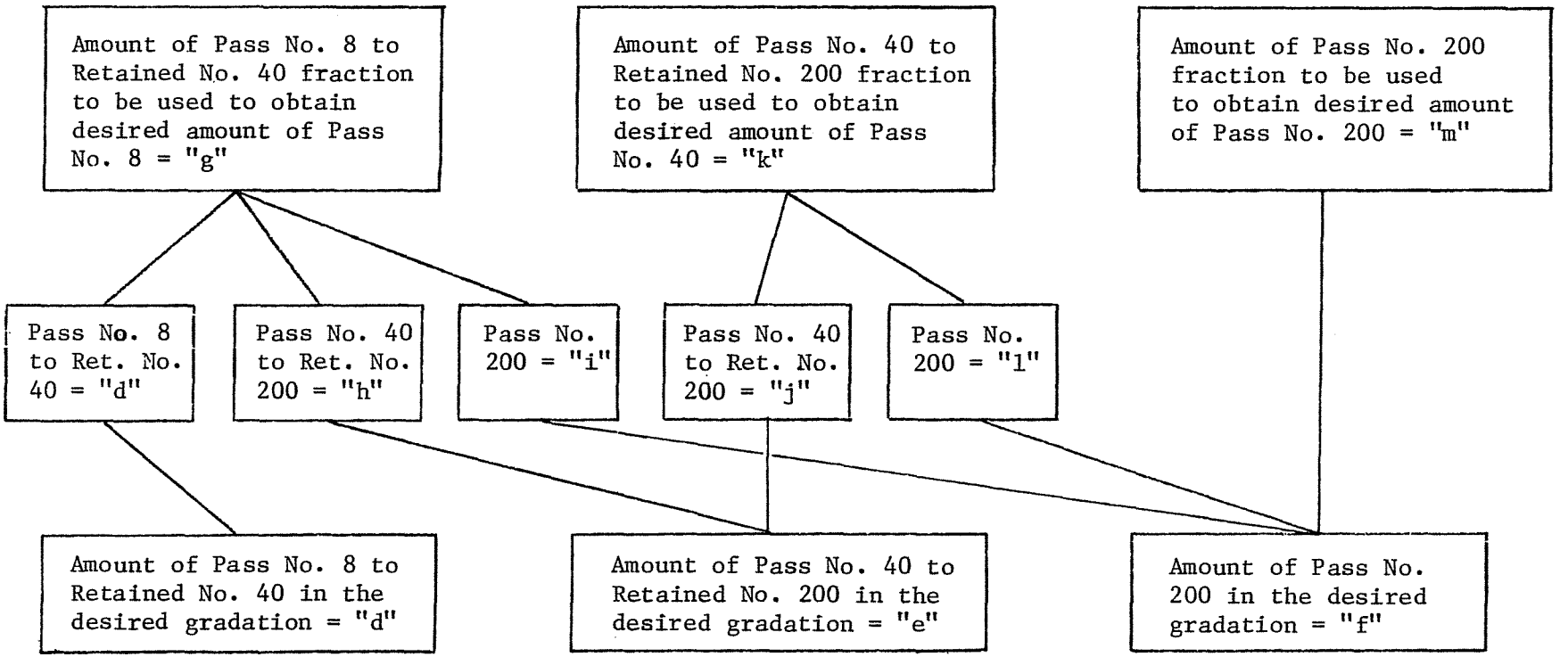
Amount of Pass No. 8 to Retained No. 40 fraction to be used to obtain desired amount of Pass No. 8 = "g"
Amount of Pass No. 40 to Retained No. 200 fraction to be used to obtain desired amount of Pass No. 40 = "k"
Amount of Pass No. 200 fraction to be used to obtain desired amount of Pass No. 200 = "m"
Pass No. 8 to Ret. No. 40 = "d"
Pass No. 40 to Ret. No. 200 = "h"
Pass No. 200 = "i"
Pass No. 40 to Ret. No. 200 = "j"
Pass No. 200 = "l"
Amount of Pass No. 8 to Retained No. 40 in the desired gradation = "d"
Amount of Pass No. 40 to Retained No. 200 in the desired gradation = "e"
Amount of Pass No. 200 in the desired gradation = "f"

FIGURE 1

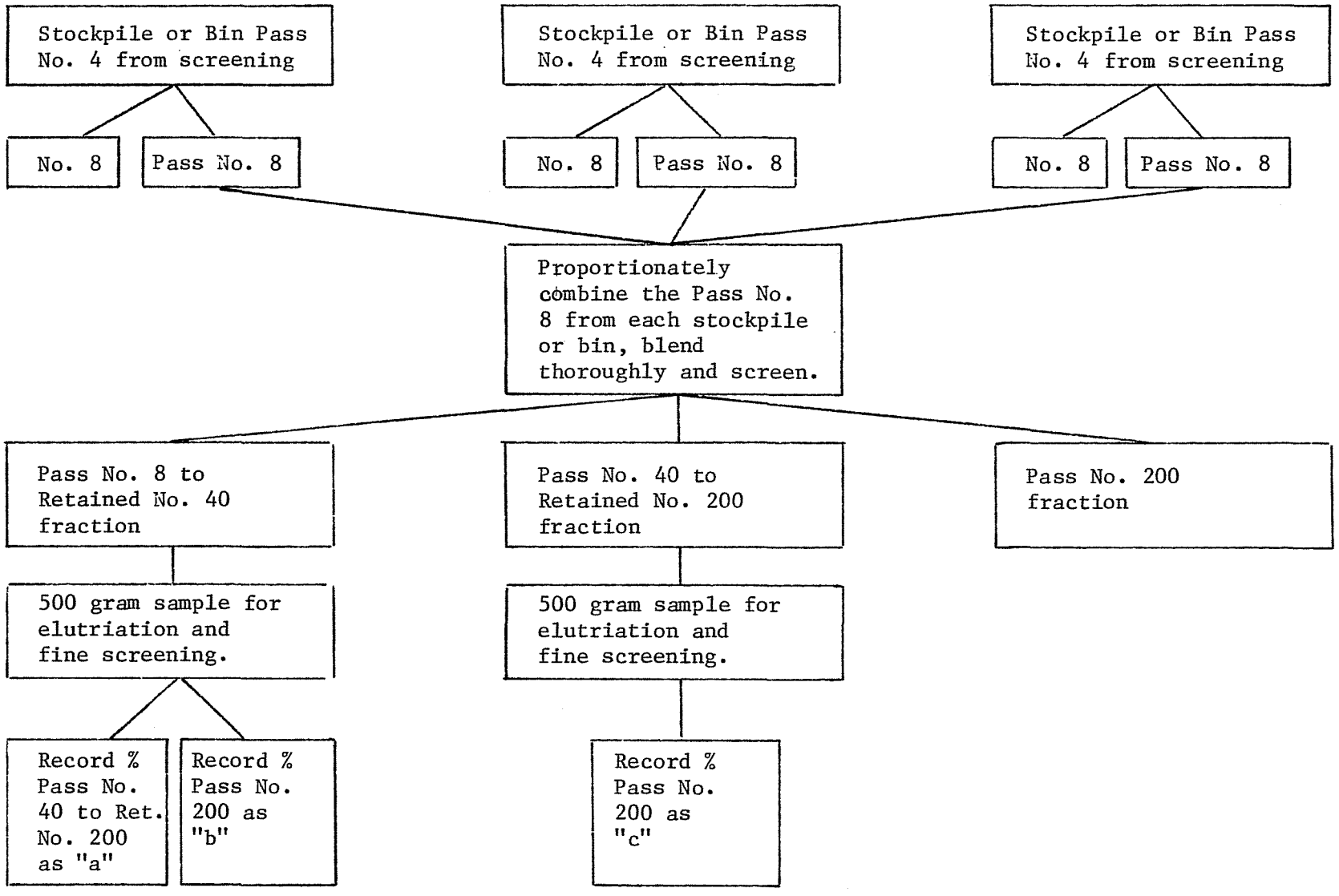
Stockpile or Bin Pass No. 4 from screening
Stockpile or Bin Pass No. 4 from screening
Stockpile or Bin Pass No. 4 from screening
No. 8
Pass No. 8
No. 8
Pass No. 8
No. 8
Pass No. 8
Proportionately combine the Pass No. 8 from each stockpile or bin, blend thoroughly and screen.
Pass No. 8 to Retained No. 40 fraction
Pass No. 40 to Retained No. 200 fraction
Pass No. 200 fraction
500 gram sample for elutriation and fine screening.
500 gram sample for elutriation and fine screening.
Record % Pass No. 40 to Ret. No. 200 as "a"
Record % Pass No. 200 as "b"
Record % Pass No. 200 as "c"

FIGURE 2

COMPOSITE ADJUSTED TO DESIRED COMPOSITE OF PLUS NO. 8 MATERIAL

DATE _____ PROJECT NO. _____ LAB. NO. _____ DESIGN _____

Sieve Size	Aggregate "% of composite" C 30%	I 25%	F 45%			% Ret.	% Ret. Rounded	% Pass	DESIRED ADJUSTED ~~Design Specs.~~ COMPOSITE
1"							0	100	100
3/4"	2.6 ~~3.1~~	0.4 ~~0.5~~				3 ~~3.6~~	4	96	97
1/2"	11.4 ~~11.6~~	3.6 ~~3.6~~				15 ~~15.2~~	15	81	82
3/8"	8.5 ~~7.5~~	2.5 ~~2.2~~				11 ~~9.7~~	10	71	71
1/4"	1.7 ~~2.4~~	2.2 ~~3.1~~	0.1 ~~0.2~~			4 ~~5.7~~	6	65	67
#4	2.5 ~~2.2~~	1.6 ~~1.4~~	1.9 ~~1.7~~			6 ~~5.3~~	5	60	61
#8	2.6 ~~3.0~~	5.4 ~~6.3~~	5.0 ~~5.9~~			13 ~~15.2~~	15	45	48
#10	0	0.3	1.6			1.9	2	43	
#16	0	0.9	4.8			5.7	6	37	
#30	0	1.4	6.8			8.2	8	29	
#40	0	1.7	6.3			8.0	8	21	18
#50	0	0.9	6.2			7.1	7	14	
#100	0	0.8	4.4			5.2	5	9	
#200	0	0.4	2.3			2.7	3	6.5	5.7
Pass #200	0.16	1.53	4.79			6.48	6.5		

MIX DESIGN CRITERIA REQUIREMENTS:

IMC RET. ~
MIN. WET STRENGTH ~
VOIDS ~
V.M.A. ~
MIN. STABILITY ~
FLOW ~

COMPOSITE OF PASS NO. 8 FROM GRADATION OF EACH STOCKPILE OR BIN:

LAB #	-#8
COARSE	0.2
INTER	7.9
FINE	37.2
TOTAL =	45.3

Sieve Size	Adjusted "% of composite" for use of mineral admixture						Calc. % Pass	% Ret.	% Pass	Design Specs.
1"	"	"	"	"	".	"				
3/4"										
1/2"										
3/8"										
1/4"										
#4										
#8										
#10										
#16										
#30										
#40										
#50										
#100										
#200										

Adjusted "% of composite" = | Adjusted "% of composite" = | Adjusted "% of composite" = | Adjusted "% of composite" = | Adjusted "% of composite" = | Adjusted % Mineral Admix. =

REMARKS

$3/4: \frac{3}{3.6} = 0.8333$

$1/2: \frac{15}{15.2} = 0.9868$

$3/8: \frac{11}{9.7} = 1.1340$

$1/4: \frac{4}{5.7} = 0.7018$

$\#4: \frac{6}{5.3} = 1.1321$

$\#8: \frac{13}{15.2} = 0.8553$

FIGURE 3

44-9361 10/83

ASPHALTIC CONCRETE MIX DESIGN WEIGH UP CARD

MATERIAL LAB NO. DATE

PROJECT NO. PROJECT NAME

CONTRACTOR MIX DESIGN REQUEST

LAB NO.	SIZE	ACCUM % RET.	1 RICE	3 STABS	3 IMC	1 COARSE SP. GR.	1 COARSE SAND EQUIV.	1 CRUSH FACES	COARSE C.K.E.	LIME-STONE	FLAKI-NESS INDEX	1 ABRASION "B"	BLEND SP. GR.	1 FINE SAND EQUIV.	1 FINE SP. GR.	1 - #8 MAKE-UP MAT'L	SIZE	LAB NO
COARSE	3/4	2.6	78	86	88	267	26	15				—						
	1/2	14.0	420	462	476	1436	138	81				1900						
	3/8	22.5	675	742	765	2308	221	130				3832						
	1/4	24.2	726	799	823	2482	238	140				—						
	#4	26.7	801	881	908	2738	263	154				—						
INTER	3/4	27.1	813	894	921	2779	267	156				—						
	1/2	30.7	921	1013	1044	3149	302	177				4432						
	3/8	33.2	996	1096	1129	3405	327	192				5000						
	1/4	35.4	1062	1168	1204	3631	348	204										
	#4	37.0	1110	1221	1258	3795	364	213										
FINE	1/4	37.1	1113	1224	1261	3805	365	214										
	#4	39.0	1170	1287	1326	4000	384	225										
COARSE	#8	41.6	1248	1373	1414			240						26	51	—	#8	COARSE
INTER	#8	47.0	1410	1551	1598			271						79	157	—	#8	INTER
FINE	#8	52.0	1560	1716	1768			300						128	256	—	#8	FINE
PASS 8-RET 40		82.10	2463	2709	2791									424	848	376	PASS 8-RET 40	
PASS 40-RET 200		94.53	2836	3119	3214									546	1092	532	PASS 40-RET 200	
PASS 200		100	3000	3300	3400									600	1200	600	PASS	200

REMARKS:

FIGURE 4

MAXIMUM DRY DENSITY AND OPTIMUM MOISTURE OF SOILS BY ALTERNATE METHOD D PROCTOR

(A Modification of AASHTO Designation T 99)

SCOPE

1. (a) This test method describes the procedure for determining the maximum dry density and optimum moisture content for a soil by the Alternate Method D Proctor Method.

(b) Alternate Method D may be used for all maximum dry density and optimum moisture content determinations except for volcanic cinders or light porous material on which the specific gravity cannot be determined with consistency or when the moisture absorption for the coarse aggregate is greater than 4.0%.

(c) Alternate Method D may be used except when greater than 40% of the material is retained on the 3/4 inch sieve.

(d) An example is provided in Figure 3 for the calculations and determinations referenced herein.

(e) This test method may involve hazardous materials, operations, and equipment. This test method does not purport to address all of the safety problems associated with its use. It is the responsibility of whomever uses this test method to consult and establish appropriate safety and health practices and determine the applicability of regulatory limitations prior to use.

APPARATUS

2. The apparatus shall consist of the following:

(a) 6 inch proctor mold having a capacity of approximately 1/13.33 cubic foot, with an internal diameter of 6.000 plus 0.039 or minus 0.026 inches and a height of 4.584 plus 0.005 or minus 0.008 inches. The mold shall have a nominal wall thickness of 1/4 inch. It shall be equipped with an extension collar approximately 2-3/8 inches high. A baseplate as shown in Figure 1 shall be provided.

(b) A hand or mechanical rammer weighing 5.50 $\pm$ 0.02 pounds, having a flat face, and equipped with a suitable arrangement to control the height of drop to a free fall of 12 $\pm$ 0.06 (1/16) inches above the elevation of the soil. The hand rammer face shall be circular with a diameter of 2.000 plus 0.010 or minus 0.015 inches. The mechanical rammer face shall have the shape of a piece of pie, with a radius of approximately 3 inches, and having an area of 3.134 $\pm$ 0.039 square inches. If a mechanical apparatus is used, it must be monitored through the ADOT proficiency sample program and maintain a rating of 3 or better based on the results of testing ADOT and AMRL proficiciency samples.

(c) Hardened-steel straightedge, at least 10 inches in length. It shall have one beveled edge, and at least one longitudinal surface (used for final trimming) shall be plane within 0.01 inch per 10 inches (0.1 percent) of length with the portion used for trimming the soil.

(d) Scale or balance capable of measuring the maximum weight to be determined, accurate to at least one gram.

(e) Scale or balance capable of measuring the maximum weight to be determined, accurate to at least 0.1 gram.

(f) Oven capable of maintaining a temperature of $230^{o} \pm 9^{o}$ F ($110^{o} \pm 5^{o}$ C).

(g) 3/4 inch and 3 inch sieves conforming to the requirements of AASHTO M 92.

(h) Miscellaneous mixing tools and pans.

(i) Sample Extruder (optional) consisting of a jack, lever, frame, or other device for extruding the compacted sample from the mold.

CALIBRATION OF MOLD

3. Molds shall be calibrated in accordance with APPENDIX A of Arizona Test Method 225.

SAMPLE

4. The sample shall be prepared as follows:

(a) Enough soil material shall be provided from the field to make five compacted specimens. A minimum sample size of 45,000 grams (approximately 100 lbs.) is normally required.

(b) If the soil sample is damp when received from the field, dry it until it becomes friable under a trowel. Drying may be in air or by use of a slow fan or other drying apparatus such that the temperature of the sample does not exceed 140° F.

(c) Thoroughly break up the aggregations in such a manner as to avoid reducing the natural size of individual particles.

(d) Weigh out an approximate 45,000 gram sample of representative soil. Record the weight of the sample, and sieve the material over a 3/4 inch sieve. If the percentage of coarse aggregate or rock retained on the 3/4 inch sieve is not already known from gradation testing, save any material retained on the 3/4 inch sieve and weigh. Calculate the percent of coarse aggregate or rock particles retained on the 3/4 inch sieve according to the following equation:

$$PR3/4 = \frac{WR3/4}{WT} \times 100$$

Where: PR3/4 = Percentage of coarse aggregate or rock particles retained on the 3/4 inch sieve

WR3/4 = Weight of coarse aggregate or rock particles retained on the 3/4 inch sieve

WT = Total weight of material sieved

(e) If "PR3/4" is greater than 40%, then too much rock is present to allow for a reasonable maximum dry density determination If "PR3/4" is less than or equal to 40%, blend material passing the 3/4 inch sieve thoroughly and proceed to Section 5 of this test method. If a specific gravity and absorption determination, in accordance with AASHTO T 85, is to be made for the plus 3/4 inch material, save an adequate amount of this material, otherwise, discard it.

PROCEDURE

5. Procedure to be used is as follows:

(a) From the thoroughly blended passing 3/4 inch material from paragraph 4(e), split out 5 representative approximate 5000 gram samples.

(b) Select one sample and thoroughly mix with sufficient water to dampen it to approximately three percentage points below optimum moisture content.

NOTE: If desired, an additional three samples may be mixed at this time with approximate moisture contents of 1% below optimum, 1% over optimum, and 3% over optimum. The moisture in each of these samples shall be retained by covering with a damp cloth or being sealed in air tight containers until they are compacted. One of the five samples should be retained for future use since it is necessary to have at least two points defined on each side of the moisture-density curve.

(c) Heavy clay soils or materials which tend to break down, or those in which it is difficult to incorporate water, shall require approximately 12 hours for uniform moisture absorption to be achieved. This shall be accomplished by preparing separate samples for each increment of water to be added, and then placing and sealing these samples in air tight containers for the 12-hour period.

(d) Form a specimen by compacting the prepared soil in the six inch mold (with extension collar attached) in three equal layers to give a total compacted depth of about 5 inches. Compact each layer with 56 uniformly distributed blows from the rammer, dropping free from a height of 12 inches. While each layer is being compacted, the remainder of material shall be in a pan covered by a damp cloth. During compaction, the mold shall rest firmly on a dense, uniform, rigid and stable foundation.

NOTE: Each of the following has been found to be a satisfactory base on which to rest the mold during compaction of the soil: A block of concrete, weighing not less than 200 lbs., supported by a stable foundation; a sound concrete floor; and for field application, such surfaces as found in concrete box culverts, bridges, and pavements.

(e) When compacting granular, free-draining materials, at moisture contents which are at or above optimum, the mold shall be prepared by first sealing the bottom of the mold with waterproofing grease. All excess grease shall be wiped from the mold and baseplate.

(f) Following compaction, carefully remove the extension collar. It may be necessary to use a follower to retain the soil in the mold while removing the collar to prevent damage or disturbance of the soil below the top of the mold. Carefully trim the compacted soil even with the top of the mold by means of the straightedge. If any voids are created during trimming, these shall be filled with fine material and smoothed off. Determine the weight of compacted specimen and mold. Determine the wet density, "WD", of the compacted soil by the following:

$$WD = \frac{M1 - M2}{VM \times 453.6 \text{ (grams/lb.)}}$$

Where: WD = Wet density of compacted soil, lb./cu. ft.
M1 = Weight of compacted specimen and mold, grams
M2 = Weight of the mold, grams
VM = Volume of the mold, cu. ft. (See Section 3 of this procedure.)

(g) The estimated dry density, "ED", of the compacted soil may be calculated and recorded to the nearest 0.1 lb./cu. ft. as follows:

$$ED = \frac{WD}{\text{(Approx. \% of water added)} + 100} \times 100$$

Where: ED = Estimated dry density of compacted soil, lb./cu. ft.
WD = Wet density of compacted soil, lb./cu. ft.

NOTE: These estimated densities are approximate only and will be corrected when final moisture results are obtained.

(h) The estimated dry density is useful in deciding how much water to add in later trial batches, if the procedure described in the note following paragraph 5(b), for initially preparing three additional samples with varing moisture contents is not utilized. By carefully observing the estimated dry density of the compacted samples, the operator should be able to vary the moisture content as the test proceeds so that when the final moisture-density results are plotted, a curve will result that rises to a peak and then falls away.

(i) Remove the material from the mold and slice vertically through the center. Take a representative minimum 600 gram sample from the full length and width of one of the cut faces. Weigh immediately, and dry to a constant weight in an oven at $230^{o} \pm 9^{o}$ F ($110^{o} \pm 5^{o}$ C) to determine the moisture content in accordance with AASHTO T 265. Record the weight of wet soil to the nearest 0.1 gram as "WW", and record the weight of oven dry soil to the nearest 0.1 gram as "DW".

(j) For granular, free-draining materials, the moisture content shall be determined using the entire compacted proctor specimen. Determine the weight of wet soil, "WW", by subtracting the weight of the mold, "M2", from the weight of compacted specimen and mold, "M1". Record the weight of wet soil, "WW", and the weight of oven dry soil, "DW", to at least the nearest gram. All clinging material shall be removed from the inside of the mold and included with the specimen. To facilitate drying, the specimen may be broken up and spread out in a large pan, being careful to not lose any soil particles.

(k) Select another of the samples which was split in paragraph 5(a), and if not already done, thoroughly mix with water in sufficient amount to increase the moisture content by approximately two percentage points.

(l) Repeat the procedure in paragraphs 5(c) through 5(j) for the sample at each moisture content, as necessary to establish a moisture-density curve which rises to a peak and then falls away.

CALCULATIONS

6. Calculate the percent moisture and dry density for each of the compacted soil samples as follows:

(a) Calculate percent moisture and record to the nearest 0.1 percent by the following:

$$\% \text{ Moisture} = \frac{WW - DW}{DW} \times 100$$

Where: WW = weight of wet soil, grams
DW = weight of oven dry soil, grams

(b) Calculate dry density and record to the nearest 0.1 lb./cu. ft. by the following:

$$DD = \frac{WD}{\% \text{ Moisture} + 100} \times 100$$

Where: DD = Dry density of compacted soil, lb./cu. ft.
WD = Wet density of compacted soil, lb./cu. ft.

MOISTURE-DENSITY RELATIONSHIP

7. The percent moisture and corresponding dry density for each of the compacted soil specimens shall be plotted on the graph provided on the proctor density test form shown in Figure 2. For a good plot, the majority of the graph is utilized. Normally, three increments on the horizontal axis shall equal one percent of moisture, and three increments on the vertical axis shall equal one lb./cu. ft. of dry density. If another number of increments other than three is utilized, the number of increments for one percent moisture and one lb./cu. ft. dry density shall always be the same.

(a) On each side of the maximum density curve, at least two points should be utilized to form two straight lines. The intersection point of these two lines defines the peak point of the density-moisture content relationship, or the maximum density and optimium moisture content for the soil. In general it will be found that higher unit mass soils assume steeper slopes with high maximum dry densities at low optimum moisture contents, while the lower unit mass soils assume flatter, more gently sloped lines with high optimum moisture contents and low maximum dry densities. Figure 4 gives examples of moisture-density plots which show the different slopes associated with different maximum dry density ranges.

(b) Optimum moisture content - The percent moisture content corresponding to the peak (intersection point of the two lines) of the moisture-density curve shall be termed the "optimum moisture content", and shall be reported as "OM" to the nearest 0.1 percent.

(c) Maximum dry density - The dry density at optimum moisture content corresponding to the peak (intersection point of the two lines) of the moisture-density curve shall be termed the "maximum dry density", and shall be reported as "MD" to the nearest 0.1 lb./cu. ft.

NOTE: The optimum moisture and maximum dry density determinations above are for the material passing the 3/4 inch sieve. When testing field samples for comparison to proctor optimum moisture and maximum dry density, a correction to the proctor optimum moisture and maximum dry density must be made, in accordance with ARIZ 227, for the percent rock which the field sample contains.

REPORT

8. Record the moisture and density data on the laboratory test form along with the laboratory number, material source and type, and other information required. A blank laboratory test form is provided in Figure 2.

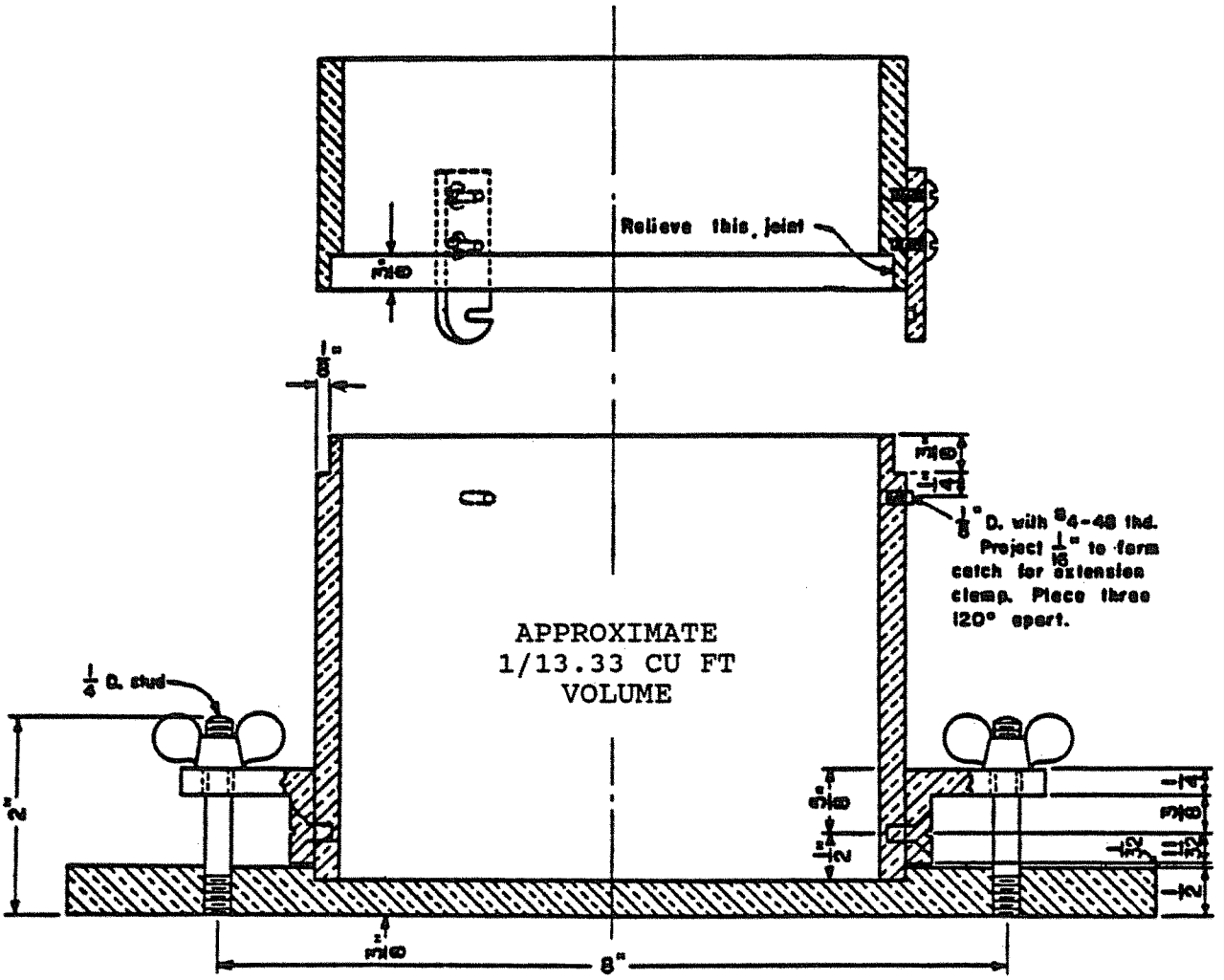

CYLINDRICAL MOLD, COLLAR
AND BASEPLATE
(6 INCH MOLD)

FIGURE 1

Arizona Department of Transportation
METHOD A OR ALTERNATE METHOD D PROCTOR DENSITY
(Arizona Test Method 225 or 245)

Project No.: _____ Lab. No: _____ Rec'd Date: _____
Source and Type of Material: _____
Proctor Method Used: Method A _____ or Alternate Method D _____
Test Operator and Date: _____
Supervisor and Date: _____

Weight of Mold = M2 = grams | Volume of Mold = VM = cu ft | a = VM x 453.6 =

b	M1	c	WD	ED	Moisture Determination				DD
					WW	DW	d	e	
Approx % of Water Added	Wt. of Sample and Mold	Wet Wt. of Sample M1 - M2	Wet Density lb/cu ft $\frac{c}{a}$	Est. Dry Density $\frac{WD \times 100}{b + 100}$	Wet Wt. of Moisture Sample	Dry Wt. of Moisture Sample	Wt. of Water WW - DW	Percent Moisture $\frac{d \times 100}{DW}$	Dry Density lb/cu ft $\frac{WD \times 100}{e + 100}$

METHOD A

WT = _____ WR4 = _____

$PR4 = \frac{WR4}{WT} \times 100 =$ _____%

ALTERNATE METHOD D

WT = _____ WR3/4 = _____

$PR3/4 = \frac{WR3/4}{WT} \times 100 =$ _____%

Coarse Aggregate Bulk Oven Dry Specific Gravity: _____

Coarse Aggregate Absorption: _____%

OPTIMUM MOISTURE CONTENT = OM = _____%

MAXIMUM DRY DENSITY (lb./cu. ft.) = MD = _____

Dry Density lb./cu. ft.

Percent Moisture

REMARKS: _____

44-1002 10/92

FIGURE 2

Arizona Department of Transportation
METHOD A OR ALTERNATE METHOD D PROCTOR DENSITY
(Arizona Test Method 225 or 245)

Project No.: _____ Lab. No: _____ Rec'd Date: _____
Source and Type of Material: _____
Proctor Method Used: Method A _____ or Alternate Method D ✓
Test Operator and Date: _____
Supervisor and Date: _____

Weight of Mold = M2 = 2840 grams | Volume of Mold = VM = 0.0744 cu ft | a = VM x 453.6 = 33.7478

b	M1	c	WD	ED	Moisture Determination				DD
					WW	DW	d	e	
Approx % of Water Added	Wt. of Sample and Mold	Wet Wt. of Sample M1 - M2	Wet Density lb/cu ft c / a	Est. Dry Density WD x 100 / b + 100	Wet Wt. of Moisture Sample	Dry Wt. of Moisture Sample	Wt. of Water WW - DW	Percent Moisture d x 100 / DW	Dry Density lb/cu ft WD x 100 / e + 100
7	7180	4340	128.6	120.2	655.5	613.8	41.7	6.8	120.4
9	7376	4536	134.4	123.3	685.3	628.7	56.6	9.0	123.3
11	7474	4634	137.3	123.7	658.4	592.1	66.3	11.2	123.5
13	7457	4617	136.8	121.1	645.9	572.1	73.8	12.9	121.2

METHOD A

WT = _____ WR4 = _____

PR4 = WR4 / WT x 100 = _____ %

ALTERNATE METHOD D

WT = 48780 WR3/4 = 17951

PR3/4 = WR3/4 / WT x 100 = 37 %

Coarse Aggregate Bulk Oven Dry Specific Gravity: 2.631

Coarse Aggregate Absorption: 2.28 %

OPTIMUM MOISTURE CONTENT = OM = 10.2 %

MAXIMUM DRY DENSITY (lb./cu. ft.) = MD = 124.8

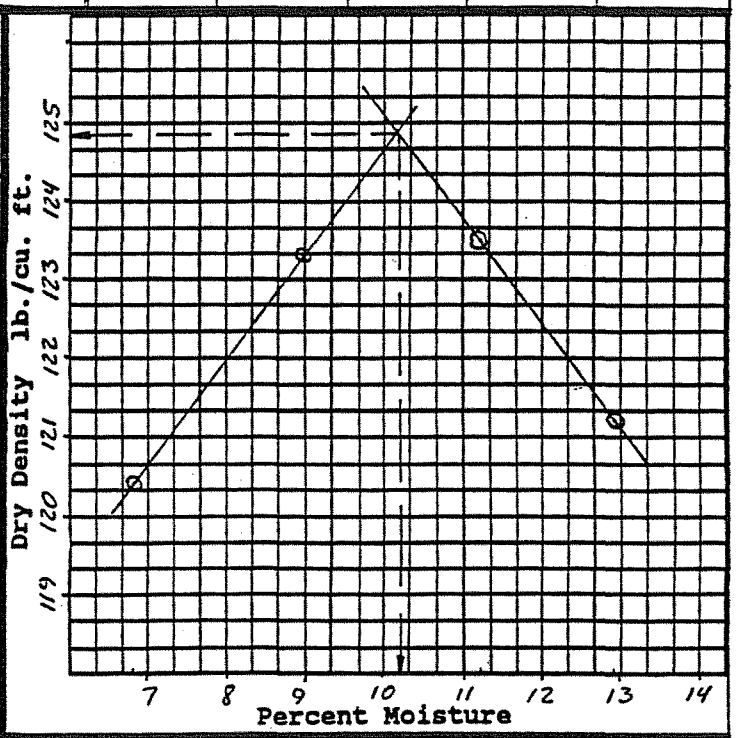

REMARKS: _____

44-1002 10/92

FIGURE 3

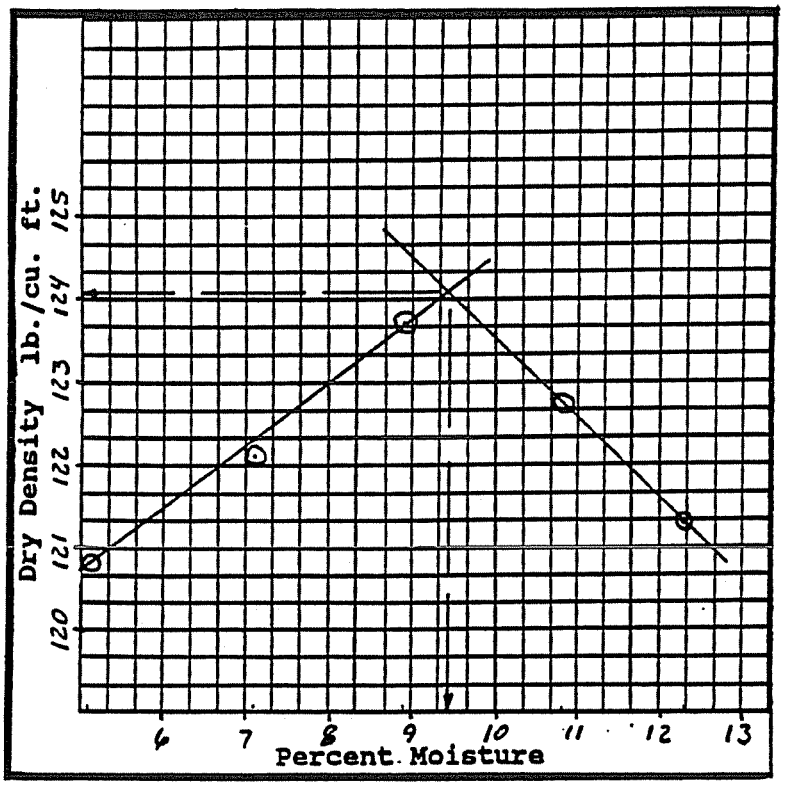

AGGREGATE BASE COURSE

% Moisture	Dry Density
5.1	120.8
7.1	122.1
8.9	123.7
10.8	122.7
12.3	121.3

Maximum Density = 124.1 lb/cu ft
Optimum Moisture = 9.4%

SILTY SAND AND GRAVEL

% Moisture	Dry Density
7.2	127.0
8.1	129.6
9.4	127.9
10.1	126.6

Maximum Density = 130.0 lb/cu ft
Optimum Moisture = 8.3%

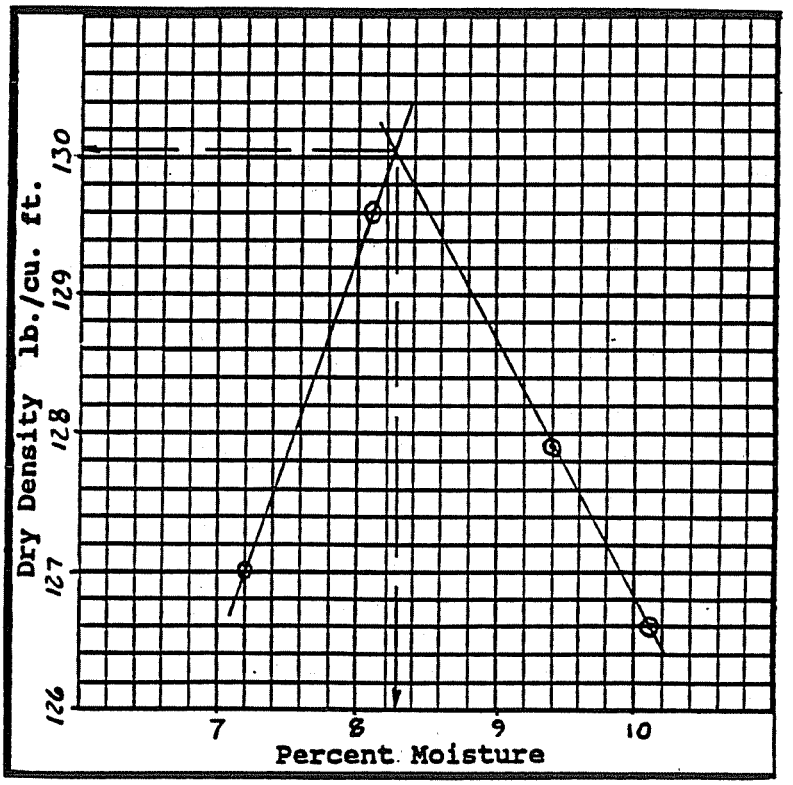

EXAMPLE PROCTOR DENSITY CURVES

FIGURE 4

MOISTURE - DENSITY RELATIONSHIP USING TYPICAL MOISTURE - DENSITY CURVES (ONE POINT PROCTOR) ALTERNATE METHOD D

(An Arizona Method)

SCOPE

1. (a) This method of test is for the determination of the optimum moisture content and maximum dry density of a soil or soil-aggregate mixture utilizing one moisture-density determination on the portion of the sample passing the 3/4 inch sieve.

(b) The one-point proctor is used with the typical moisture-density curves, shown on the back of the One Point Proctor Density Test Card (Figures 1 and 2); or by utilizing a family of moisture-density curves developed for the immediate local conditions.

(c) This method is not to be used for volcanic cinders or light porous material on which the specific gravity cannot be determined with consistency or when the absorption of the coarse aggregate is greater than 4.0%.

(d) This method may be used to determine if an existing proctor maximum density determination is valid for the soil being tested. If the existing proctor maximum density determination is not valid, a full proctor according to Arizona 245 should normally be run to determine the maximum density required for that soil type.

(e) An example is provided in Section 7, and Figures 3 and 4, for the calculations and determinations referenced herein.

(f) This test method may involve hazardous materials, operations, and equipment. This test method does not purport to address all of the safety problems associated with its use. It is the responsibility of who ever uses this test method to consult and establish appropriate safety and health practices and determine the applicability of regulatory limitations prior to use.

APPARATUS

2. The apparatus shall consist of the following:

(a) The general apparatus utilized for this test method shall conform to the apparatus requirements of Arizona Test Method 245.

(b) In place of the oven listed in the general apparatus, a hot plate or stove capable of maintaining a temperature of approximately 230° F. may be used. A Speedy Moisture Tester with a conversion table or calibration curve may also be used for moisture determinations made in the field. Finally, a microwave oven may be used in accordance with Arizona Test Method 719.

(c) Instead of the scale or balance capable of measuring the weight to be determined to at least one gram, a scale capable of measuring the weight to at least 0.01 pound may be utilized.

CALIBRATION OF MOLD

3. Molds shall be calibrated in accordance with APPENDIX A of ARIZ 225.

SAMPLE

4. A representative sample of passing 3/4 inch material weighing approximately 5000 grams shall be obtained for each one-point proctor.

PROCEDURE

5. (a) If the Speedy Moisture Tester is <u>not</u> to be used in making the moisture content determination, proceed to paragraph 5(d).

(b) For testing performed in the field, the Speedy Moisture Tester (AASHTO T 217) may be used to make the moisture content determination. The approximate 5000 gram sample of pass 3/4 inch material is sieved over a No. 4 sieve. Calculate the percent of coarse aggregate or rock particles retained on the No. 4 sieve by the following:

$$PR4 = \frac{WR4}{WT} \times 100$$

Where: PR4 = Percentage of coarse aggregate or rock particles retained on the No. 4 sieve.
WR4 = Weight of coarse aggregate or rock particles retained on the No. 4 sieve.
WT = Total Weight of material sieved.

(c) Recombine and thoroughly blend the plus No. 4 material with the passing No. 4 material.

(d) The approximate 5000 gram sample of passing 3/4 inch material shall be thoroughly mixed with sufficient water to bring the sample to slightly less than its optimum moisture content.

(e) Form a specimen by compacting the prepared soil in the six inch mold (with extension collar attached) in three equal layers to give a total compacted depth of about 5 inches. Compact each layer with 56 uniformly distributed blows from the rammer, dropping free from a height of 12 inches. While each layer is being compacted, the remainder of material shall be in a pan covered by a damp cloth. During compaction, the mold shall rest firmly on a dense, uniform, rigid and stable foundation.

NOTE: Each of the following has been found to be a satisfactory base on which to rest the mold during compaction of the soil: A block of concrete, weighing not less than 200 lbs., supported by a stable foundation; a sound concrete floor; and for field application, such surfaces as found in concrete box culverts, bridges, and pavements.

(f) When compacting granular, free-draining materials, at moisture contents which are at or above optimum, the mold shall be prepared by first sealing the bottom of the mold with waterproofing grease. All excess grease shall be wiped from the mold and base plate.

(g) Following compaction, carefully remove the extension collar. It may be necessary to use a follower to retain the soil in the mold while removing the collar to prevent damage or disturbance of the soil below the top of the mold. Carefully trim the compacted soil even with the top of the mold by means of the straightedge. If any voids are created during trimming, these shall be filled with fine material and smoothed off. Determine the weight of compacted specimen and mold. Determine the wet density, “WD”, of the compacted soil by the following:

$$WD = \frac{M1 - M2}{VM \times 453.6 \text{ (grams/lb.)*}}$$

Where:	WD	=	Wet density of compacted soil, lb./cu. ft.
	M1	=	Weight of compacted specimen and mold, grams or lbs.
	M2	=	Weight of the mold, grams or lbs.
	VM	=	Volume of the mold, cu. ft. (See Section 3 of this procedure).

* If the weights of the compacted specimen and mold, M1, and the empty mold, M2, are measured in pounds, eliminate 453.6 (grams/lb.) from the denominator of the above equation.

(h) The moisture content of the sample is determined either by drying (See paragraph (I) below); or, when testing is performed in the field, the Speedy Moisture Tester may be used (See in paragraph (j) below).

(i) When the percent moisture is determined by drying, remove the material from the mold and slice vertically through the center. Take a representative minimum 600 gram sample from the full length and width of one of the cut faces. Record the weight of wet soil to the nearest 0.1 gram as “WW”. Dry the sample to constant weight at approximately 230° F. and record weight of dry soil to the nearest 0.1 gram as “DW”. The percent moisture shall be recorded to the nearest 0.1 percent. The equation below is used when the percent moisture is determined by drying the sample.

$$\% \text{ Moisture} = \frac{WW - DW}{DW} \times 100$$

(j) For testing in the field, the percent moisture may be determined using the Speedy Moisture Tester. Remove the material from the mold and slice vertically through the center. Obtain a minimum of 600 grams of material from the full length and width of one of the cut faces. This material is screened over a No. 4 sieve as rapidly as possible to avoid drying of the sample. A representative sample of the pass No. 4 material shall be utilized and tested in accordance with the instructional manual for that apparatus. The percent moisture of the pass No. 4 material determined by the Speedy Moisture Tester is recorded to the nearest 0.1 percent as “W”. The moisture content of the pass 3/4 inch material is determined and recorded as “TW” to the nearest 0.1 percent by the following:

$$TW = \frac{W\,(100 - PR4) + PR4}{100}$$

Where: TW = % moisture in pass 3/4 material.
W = % moisture in pass 3/4 material. (determined by Speedy)
PR4 = % rock retained on the No. 4 sieve (determined in paragraph 5(b))

MAXIMUM DENSITY DETERMINATION

6. (a) The point representing the wet density and moisture content (dry basis) is then plotted on the Typical Moisture-Density Curves (Figure 2) and the maximum wet density and optimum moisture content determined. When this plotted point falls between two moisture-density curves, a minor interpolation is necessary. The maximum dry density in lb/cu. ft. and the corresponding percent optimum moisture is then read directly or interpolated from the chart. The family of typical moisture-density curves provided should be periodically verified for the local conditions. If it is ascertained that the family of curves provided by Figure 2 is of questionable reliability for given local conditions, then an independent family of curves should be established and used.

(b) The plotted point for wet density and moisture content should be on the dry side of the curve at or near optimum, as it is difficult to interpolate between curves for friable soils when on the wet side of the peak.

(c) If the plotted point representing the wet density and moisture content of the compacted material is on the right of the peak, the test should be repeated using a lower moisture content. An exception to this rule must be made for those soils having high clay contents and relatively flat curves. These soils cannot readily be dried to optimum in the field due to the creation of a cloddy condition which will cause voids in the proctor. Proctors for these materials should be made as near to optimum as possible.

EXAMPLE

7. An illustration of determining the maximum dry density and optimum moisture content is described below, and shown in Figures 3 and 4:

For:

Wet Density = 122.5 lb./cu. ft.
Moisture Content = 18.7%

By plotting this point on the Typical Moisture-Density Curves and interpolating to the peak, it shows a point which is approximately 20 percent of the distance from Curve P to Curve Q. From the chart, the dry density for Curve P is 104.7 @ 19.2% moisture and Curve Q is 102.4 @ 20.3% moisture.

By interpolation:

Density: 104.7 - 102.4 = 2.3
.20 X 2.3 = 0.5 lb./cu. ft. difference

Moisture: 20.3- 19.2 = 1.1
.20 X 1.1 = 0.2% difference

Therefore:

Maximum dry density = 104.7 - 0.5
= 104.2 lb./cu. ft.

Optimum Moisture = 19.2 + 0.2 = 19.4%

* As an alternate to performing the interpolation procedure, Table 1 below can be used to determine the maximum dry density and optimum moisture content when the plotted point falls between two moisture-density curves.

NOTE: The optimum moisture and maximum dry density determinations above are for the material passing the 3/4 inch sieve. When testing field samples for comparison to proctor optimum moisture and maximum dry density, a correction to the proctor optimum moisture and maximum dry density must be made, in accordance with ARIZ 227, for the percent rock which the field sample contains.

REPORT

8. Record the moisture and density data on the laboratory test form along with the laboratory number, material source and type, and other information required.

A	**141.8**	**6.6**	**F**	**129.3**	**9.7**	**K**	**117.0**	**13.5**	**P**	**104.7**	**19.2**	**U**	**92.1**	**25.8**
10%	141.5	6.7	**10%**	129.0	9.8	**10%**	116.8	13.6	**10%**	104.5	19.3	**10%**	91.9	26.0
20%	141.3	6.7	**20%**	128.8	9.9	**20%**	116.5	13.7	**20%**	104.2	19.4	**20%**	91.7	26.1
30%	141.0	6.8	**30%**	128.5	9.9	**30%**	116.3	13.8	**30%**	104.0	19.5	**30%**	91.4	26.3
40%	140.7	6.8	**40%**	128.2	10.0	**40%**	116.0	13.9	**40%**	103.8	19.6	**40%**	91.2	26.4
50%	140.5	6.9	**50%**	128.0	10.1	**50%**	115.8	14.1	**50%**	103.6	19.8	**50%**	91.0	26.6
60%	140.2	7.0	**60%**	127.7	10.2	**60%**	115.6	14.2	**60%**	103.3	19.9	**60%**	90.8	26.8
70%	139.9	7.0	**70%**	127.4	10.3	**70%**	115.3	14.3	**70%**	103.1	20.0	**70%**	90.6	26.9
80%	139.6	7.1	**80%**	127.1	10.3	**80%**	115.1	14.4	**80%**	102.9	20.1	**80%**	90.3	27.1
90%	139.4	7.1	**90%**	126.9	10.4	**90%**	114.8	14.5	**90%**	102.6	20.2	**90%**	90.1	27.2
B	**139.1**	**7.2**	**G**	**126.6**	**10.5**	**L**	**114.6**	**14.6**	**Q**	**102.4**	**20.3**	**V**	**89.9**	**27.4**
10%	138.8	7.3	**10%**	126.4	10.6	**10%**	114.3	14.7	**10%**	102.2	20.4	**10%**	89.7	27.6
20%	138.5	7.3	**20%**	126.1	10.6	**20%**	114.1	14.8	**20%**	101.9	20.5	**20%**	89.4	27.8
30%	138.3	7.4	**30%**	125.9	10.7	**30%**	113.8	15.0	**30%**	101.7	20.7	**30%**	89.2	28.0
40%	138.0	7.5	**40%**	125.6	10.8	**40%**	113.6	15.1	**40%**	101.4	20.8	**40%**	88.9	28.2
50%	137.7	7.6	**50%**	125.4	10.9	**50%**	113.3	15.2	**50%**	101.2	20.9	**50%**	88.7	28.5
60%	137.4	7.6	**60%**	125.2	10.9	**60%**	113.0	15.3	**60%**	100.9	21.0	**60%**	88.5	28.7
70%	137.1	7.7	**70%**	124.9	11.0	**70%**	112.8	15.4	**70%**	100.7	21.1	**70%**	88.2	28.9
80%	136.9	7.8	**80%**	124.7	11.1	**80%**	112.5	15.6	**80%**	100.4	21.3	**80%**	88.0	29.1
90%	136.6	7.8	**90%**	124.4	11.1	**90%**	112.3	15.7	**90%**	100.2	21.4	**90%**	87.7	29.3
C	**136.3**	**7.9**	**H**	**124.2**	**11.2**	**M**	**112.0**	**15.8**	**R**	**99.9**	**21.5**	**W**	**87.5**	**29.5**
10%	136.1	8.0	**10%**	124.0	11.3	**10%**	111.8	15.9	**10%**	99.7	21.6	**10%**	87.3	29.6
20%	135.9	8.0	**20%**	123.7	11.3	**20%**	111.5	16.0	**20%**	99.4	21.7	**20%**	87.0	29.7
30%	135.6	8.1	**30%**	123.5	11.4	**30%**	111.3	16.1	**30%**	99.2	21.9	**30%**	86.8	29.8
40%	135.4	8.1	**40%**	123.2	11.5	**40%**	111.0	16.2	**40%**	98.9	22.0	**40%**	86.5	29.9
50%	135.2	8.2	**50%**	123.0	11.6	**50%**	110.8	16.4	**50%**	98.7	22.1	**50%**	86.3	30.0
60%	135.0	8.3	**60%**	122.7	11.6	**60%**	110.6	16.5	**60%**	98.4	22.2	**60%**	86.0	30.1
70%	134.8	8.3	**70%**	122.5	11.7	**70%**	110.3	16.6	**70%**	98.2	22.3	**70%**	85.8	30.2
80%	134.5	8.4	**80%**	122.2	11.8	**80%**	110.1	16.7	**80%**	97.9	22.5	**80%**	85.5	30.3
90%	134.3	8.4	**90%**	122.0	11.8	**90%**	109.8	16.8	**90%**	97.7	22.6	**90%**	85.3	30.4
D	**134.1**	**8.5**	**I**	**121.7**	**11.9**	**N**	**109.6**	**16.9**	**S**	**97.4**	**22.7**	**X**	**85.0**	**30.5**
10%	133.9	8.6	**10%**	121.5	12.0	**10%**	109.4	17.0	**10%**	97.1	22.9	**10%**	84.8	30.6
20%	133.7	8.6	**20%**	121.2	12.1	**20%**	109.1	17.1	**20%**	96.8	23.0	**20%**	84.6	30.7
30%	133.5	8.7	**30%**	121.0	12.1	**30%**	108.9	17.3	**30%**	96.6	23.2	**30%**	84.4	30.8
40%	133.3	8.7	**40%**	120.7	12.2	**40%**	108.6	17.4	**40%**	96.3	23.4	**40%**	84.2	30.9
50%	133.1	8.8	**50%**	120.5	12.3	**50%**	108.4	17.5	**50%**	96.0	23.6	**50%**	84.0	31.0
60%	132.8	8.8	**60%**	120.3	12.4	**60%**	108.1	17.6	**60%**	95.7	23.7	**60%**	83.8	31.1
70%	132.6	8.9	**70%**	120.0	12.5	**70%**	107.9	17.7	**70%**	95.4	23.9	**70%**	83.6	31.2
80%	132.4	8.9	**80%**	119.8	12.5	**80%**	107.6	17.9	**80%**	95.2	24.1	**80%**	83.4	31.3
90%	132.2	9.0	**90%**	119.5	12.6	**90%**	107.4	18.0	**90%**	94.9	24.2	**90%**	83.2	31.4
E	**132.0**	**9.0**	**J**	**119.3**	**12.7**	**O**	**107.1**	**18.1**	**T**	**94.6**	**24.4**	**Y**	**83.0**	**31.5**
10%	131.7	9.1	**10%**	119.1	12.8	**10%**	106.9	18.2	**10%**	94.4	24.5	**10%**	82.8	31.6
20%	131.5	9.1	**20%**	118.8	12.9	**20%**	106.6	18.3	**20%**	94.1	24.7	**20%**	82.6	31.7
30%	131.2	9.2	**30%**	118.6	12.9	**30%**	106.4	18.4	**30%**	93.9	24.8	**30%**	82.4	31.8
40%	130.9	9.3	**40%**	118.4	13.0	**40%**	106.1	18.5	**40%**	93.6	25.0	**40%**	82.2	31.9
50%	130.7	9.4	**50%**	118.2	13.1	**50%**	105.9	18.7	**50%**	93.4	25.1	**50%**	82.1	32.0
60%	130.4	9.4	**60%**	117.9	13.2	**60%**	105.7	18.8	**60%**	93.1	25.2	**60%**	81.9	32.1
70%	130.1	9.5	**70%**	117.7	13.3	**70%**	105.4	18.9	**70%**	92.9	25.4	**70%**	81.7	32.2
80%	129.8	9.6	**80%**	117.5	13.3	**80%**	105.2	19.0	**80%**	92.6	25.5	**80%**	81.5	32.3
90%	129.6	9.6	**90%**	117.2	13.4	**90%**	104.9	19.1	**90%**	92.4	25.7	**90%**	81.3	32.4
F	**129.3**	**9.7**	**K**	**117.0**	**13.5**	**P**	**104.7**	**19.2**	**U**	**92.1**	**25.8**	**Z**	**81.1**	**32.5**

TABLE 1

ONE POINT PROCTOR DENSITY

Lab. No: _____ Org No.: _____ Date: _____
Project No. _____ Tracs No. _____
Original Source: _____ Type of Material: _____
Coarse Agg. % Absorp.: _____ Coarse Agg. Bulk O.D. Sp. Gr.: _____
Proctor Method Used: Method A _____ Alternate Method D _____
Test Operator: _____ Date: _____
Supervisor: _____ Date: _____

Wet Density Determination

Volume of Mold = VM = _____ Cu. ft.
Weight of Mold = M2 = _____ grams _____ pounds
Weight of Sample and Mold = Ml = _____ grams _____ pounds

$$\text{Wet Density} = WD = \frac{M1 - M2}{VM \times 453.6\ (\text{grams/lb.})^*} = \_\_\_\_\_\ \text{lb./cu.ft.}$$

*If Ml and M2 are in pounds, eliminate "453.6 (grams/lb.)" from denominator in above equation.

Percent Moisture Determination

For either Method A or Alternate Method D, when sample is oven dried:

Wet Weight of Moisture Sample = WW = _____ grams
Dry Weight of Moisture Sample = DW = _____ grams

$$\%\ \text{Moisture} = \frac{WW - DW}{DW} \times 100 = \_\_\_\_\_\ \%$$

For Method A, when Speedie Moisture Tester is used:

% Moisture = _____ %

For Alternate Method D, when Speedie Moisture Tester is used:

WT = _____ WR4 = _____ PR4 = $\frac{WR4}{WT} \times 100 =$ _____ %

% Moisture in Pass No. 4 material from Speedie = W = _____ %

$$\text{Total \% Moisture} = TW = \frac{W(l00 — PR4) + PR4}{100} = \_\_\_\_\_\ \%$$

From Typical Moisture-Density Curves:
Maximum Dry Density = MD = _____ lb./cu. ft.
Percent Optimum Moisture = OM = _____ %

REMARKS: _____

FIGURE 1

TYPICAL MOISTURE-DENSITY CURVES

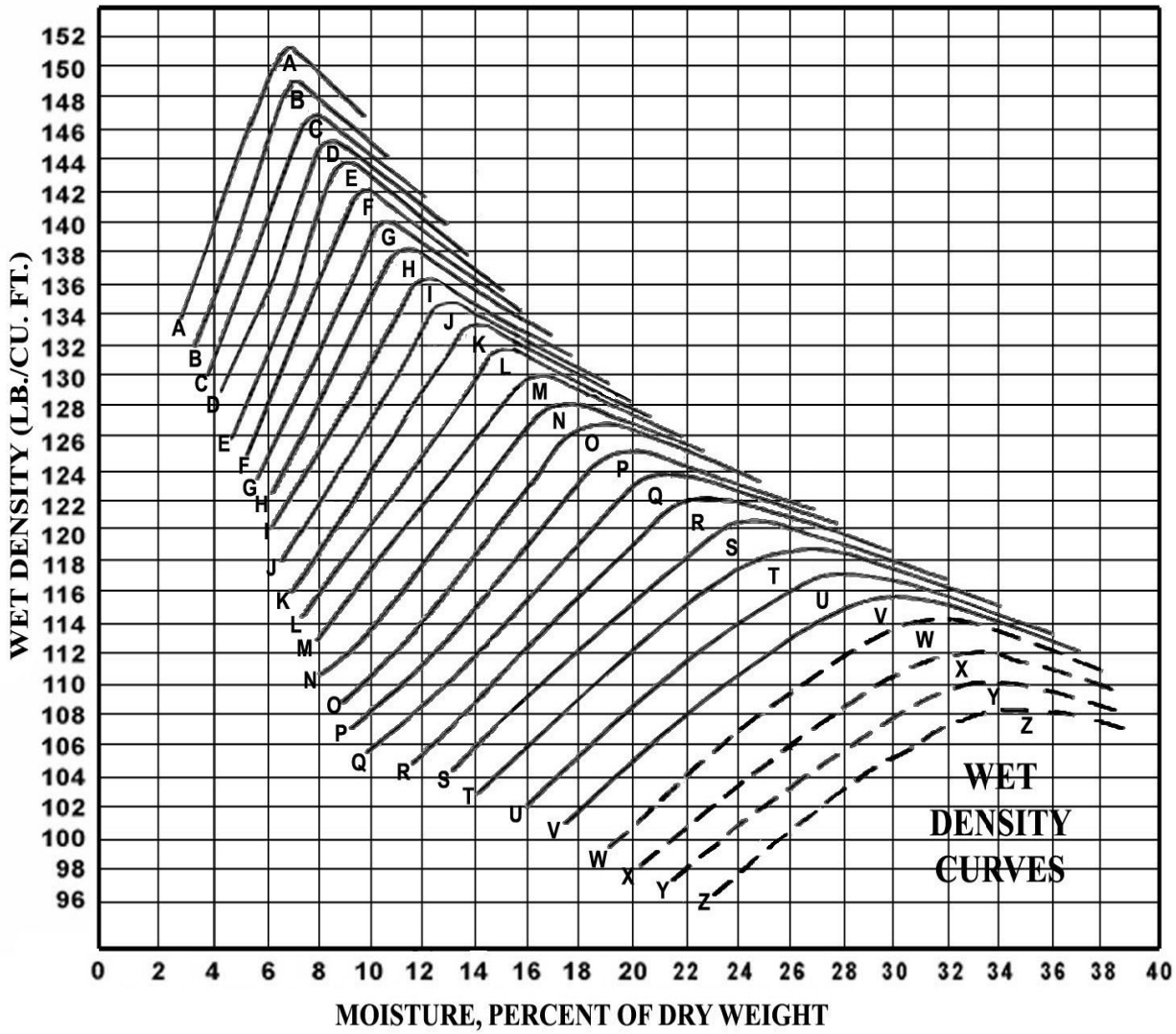

Curve	Max Dry Wt. lbs/cu.ft.	Optimum Moisure
A	141.8	6.6
B	139.1	7.2
C	136.3	7.9
D	134.1	8.5
E	132.	9.0
F	129.3	9.7
G	126.6	10.5
H	124.2	11.2
I	121.7	11.9
J	119.3	12.7
K	117.0	13.5
L	114.6	14.6
M	112.0	15.8
N	109.6	16.9
O	107.1	18.1
P	104.7	19.2
Q	102.4	20.3
R	99.9	21.5
S	97.4	22.7
T	94.6	24.4
U	92.1	25.8
V	89.9	27.4
W	87.5	29.5
X	85.0	30.5
Y	83.0	31.5
Z	81.1	32.5

FIGURE 2

ONE POINT PROCTOR DENSITY

Lab. No: _____ Org No.: _____ Date: _____
Project No. _____ Tracs No. _____
Original Source: _____ Type of Material: _____
Coarse Agg. % Absorp.: _____ Coarse Agg. Bulk O.D. Sp. Gr.: _____
Proctor Method Used: Method A _____ Alternate Method D **X**
Test Operator: _____ Date: _____
Supervisor: _____ Date: _____

Wet Density Determination

Volume of Mold = VM = **0.0758** Cu. ft.
Weight of Mold = M2 = **6608** grams _____ pounds
Weight of Sample and Mold = M1 = **10820** grams _____ pounds

$$\text{Wet Density} = WD = \frac{M1 - M2}{VM \times 453.6\ (\text{grams/lb.})^*} = \mathbf{122.5}\ \text{lb./cu.ft.}$$

*If M1 and M2 are in pounds, eliminate "453.6 (grams/lb.)" from denominator in above equation.

Percent Moisture Determination

For either Method A or Alternate Method D, when sample is oven dried:

Wet Weight of Moisture Sample = WW = _____ grams
Dry Weight of Moisture Sample = DW = _____ grams

$$\%\ \text{Moisture} = \frac{WW - DW}{DW} \times 100 = \_\_\_\_\_\ \%$$

For Method A, when Speedie Moisture Tester is used:

% Moisture = _____ %

For Alternate Method D, when Speedie Moisture Tester is used:

WT = **5736** WR4 = **1274** PR4 = $\frac{WR4}{WT} \times 100$ = **22** %

% Moisture in Pass No. 4 material from Speedie = W = **23.7** %

$$\text{Total \% Moisture} = TW = \frac{W(100 - PR4) + PR4}{100} = \mathbf{18.7}\ \%$$

From Typical Moisture-Density Curves:
Maximum Dry Density = MD = **104.2** lb./cu. ft.
Percent Optimum Moisture = OM = **19.4** %

REMARKS: _____

FIGURE 3

TYPICAL MOISTURE-DENSITY CURVES

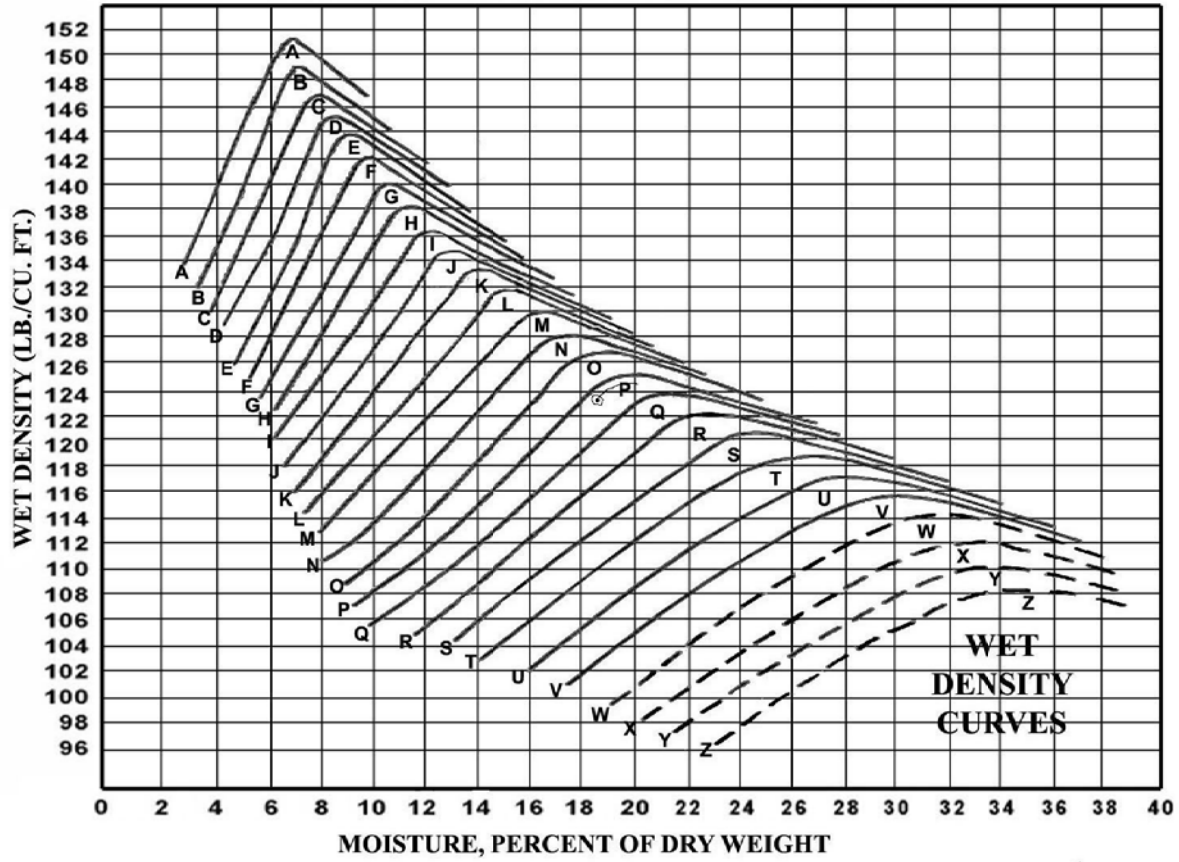

Curve	Max Dry Wt. lbs/cu.ft.	Optimum Moisure
A	141.8	6.6
B	139.1	7.2
C	136.3	7.9
D	134.1	8.5
E	132.	9.0
F	129.3	9.7
G	126.6	10.5
H	124.2	11.2
I	121.7	11.9
J	119.3	12.7
K	117.0	13.5
L	114.6	14.6
M	112.0	15.8
N	109.6	16.9
O	107.1	18.1
P	104.7	19.2
Q	102.4	20.3
R	99.9	21.5
S	97.4	22.7
T	94.6	24.4
U	92.1	25.8
V	89.9	27.4
W	87.5	29.5
X	85.0	30.5
Y	83.0	31.5
Z	81.1	32.5

Approx. 20% Below Curve P

Interpolated Max. Dry Density: 104.7 (Curve P)
- 102.4 (Curve Q)
2.3 X 0.20 = 0.5 lb./cu. ft.

104.7 - 0.5 = 104.2 lb. / cu. ft.

Interpolated % Optimum Moisture: 20.3 (Curve Q)
- 19.2 (Curve P)
1.1 X 0.20 = 0.2%

19.2 + 0.2 = 19.4%

FIGURE 4

PARTICLE SHAPE AND TEXTURE OF FINE AGGREGATE USING UNCOMPACTED VOID CONTENT

(An Arizona Test Method)

SCOPE

1. (a) This method covers the determination of the "Uncompacted Void Content" of a fine aggregate for use as a measure of its angularity and texture.

(b) This procedure provides a numerical result in terms of percent void content, determined under standardized conditions, which correlates with the particle shape and texture properties of a fine aggregate. An increase in void content indicates greater angularity and rougher texture. Lower void content results are associated with more rounded smooth particles.

APPARATUS

2. (a) A funnel having a volume of at least 200 cm^3, or being equipped with a supplemental container to provide the required volume, (See Figure 1).

(b) Funnel Stand - A support capable of holding the funnel firmly in position with its axis vertically in line with the axis of the measure, and the funnel opening 4.5 ± 0.1 inches above the top of the cylinder. A suitable arrangement is shown in Figure 1.

(c) Measure - A cylinder of approximately 100 cm^3 capacity, (See Figure 2).

(d) A metal or plastic pan of sufficient size for containing the funnel stand, and preventing loss of material that overflows the measure during filling and strike off.

(e) A straight metal spatula about 4 inches long and 1/2" wide. The end shall be cut at a right angle to the edges. The straight edge of the spatula is used to strike off the fine aggregate.

(f) A balance or scale capable of measuring the maximum weight to be determined and conforming to the requirements of AASHTO M231, except the readability and sensitivity of any balance or scale utilized shall be at least 0.1 gram.

(g) Sieves of sizes No. 8, No. 16, No. 30, No. 50 and No. 100, conforming to the requirements of AASHTO M92.

CALIBRATION OF MEASURE

3. (a) Determine and record the weight of the dry, empty measure and a flat, glass plate slightly larger than it's diameter. Fill the measure with water at a temperature of 65 to 75° F. Place the glass plate on the measure, being sure that no air bubbles remain. It may be necessary to lightly coat the top edge of the measure with grease prior to determining the weight of the empty measure and glass plate. Dry the outer surfaces of the measure and determine and record the combined weight of measure, glass plate, and water.

(b) Determine and record the volume of the measure to the nearest 0.01 cm^3 by the following calculation:

$$V = \frac{w}{0.998}$$

Where: V = volume of cylinder in cm^3
w = net weight of water in grams

SAMPLE PREPARATION

4. (a) Obtain a representative minimum 500 gram sample of minus #8 material. The sample used for this test may either be virgin aggregate, or aggregate obtained from the extraction of a bituminous mixture.

(b) Utilizing either a No. 100 or a No. 200 sieve, wash the sample in accordance with either Section 6 or 7 of Arizona Test Method 201. Dry the material to constant weight and sieve into size fractions as indicated in paragraph (c) below. Maintain the material in a dry condition in separate containers for each of the sizes specified. The sieving is to be accomplished in accordance with Arizona Test Method 201, using either the sieve sizes specified in section 2 (g) of this procedure; or, the entire nest of sieves for determining the fine sieve analysis and then combining the material into the designated size fractions. An additional sample(s) may be required to be washed and sieved to obtain the required amount of each size fraction.

(c) Weigh out and combine the following quantities of dry fine aggregate from each of the sizes below:

PASS	RETAINED	WEIGHT IN GRAMS	ACCUM. WEIGHT
# 8	# 16	44 ± 0.2	44 ± 0.2
# 16	# 30	57 ± 0.2	101 ± 0.4
# 30	# 50	72 ± 0.2	173 ± 0.6
# 50	# 100	17 ± 0.2	190 ± 0.8

PROCEDURE

5. (a) If the fine aggregate has become moist, dry to constant weight and cool to room temperature.

(b) Record the weight of the empty measure to the nearest 0.1 gram, place the funnel and measure in the funnel stand, and place the assembly in the pan described in Section 2 (d).

(c) Mix the test sample until it appears homogeneous. Using a finger (if a slide trap is not attached) to block the opening, pour the test sample into the funnel. Make sure the funnel is centered over the measure, remove the finger (or slide trap), and allow the sample to fall freely into the measure.

(d) After the funnel empties, remove excess fine aggregate from the measure by a single pass of the spatula with the edge of the blade vertical and in light contact with the top of the measure. Until this operation is complete, exercise care to avoid vibration or disturbance that could cause compaction of the fine aggregate in the measure. After strike-off, tap the measure lightly to compact the sample to make it easier to transfer the measure to the balance without spilling any of the sample. Brush adhering material from the outside of the measure and determine and record the weight of the measure and contents to the nearest 0.1 gram.

(e) Collect all of the fine aggregate from the pan and measure, and repeat the procedure again.

(f) For each determination, record the net weight of the fine aggregate in the measure. If the two net weights differ by 0.5 grams or less, average the two weights and record to the nearest 0.05 gram as the "average net weight of fine aggregate in measure", (W). If the two weights differ by more than 0.5 grams, the procedure shall be

repeated until any two results are achieved which differ by 0.5 grams or less. The average of these two results is recorded to the nearest 0.05 gram as the "average net weight of fine aggregate in measure", (W).

CALCULATION

6. (a) Determine and record the "Uncompacted Void Content" (U), to the nearest 0.1% by the following calculation:

$$U = \frac{V - (W/G)}{V} \times 100$$

Where: U = Uncompacted Void Content, percent.

V = volume of measure in cm^3.

W = average net weight of fine aggregate in measure.

G = bulk oven dry specific gravity of fine aggregate, measured in accordance with Arizona Test Method 211, "Specific Gravity and Absorption of Fine Aggregate".

(b) For most aggregate sources the fine aggregate specific gravity does not vary much from sample to sample. It is intended that the value used in the above calculation be from a routine specific gravity test which is representative of the fine aggregate. A difference in specific gravity of 0.05 will change the calculated "Uncompacted Void Content" about one percent.

REPORT

7. (a) The "Uncompacted Void Content" (U), to the nearest 0.1%.

(b) The bulk oven dry specific gravity of the fine aggregate (G), to the nearest 0.001.

FUNNEL, FUNNEL STAND, AND MEASURE

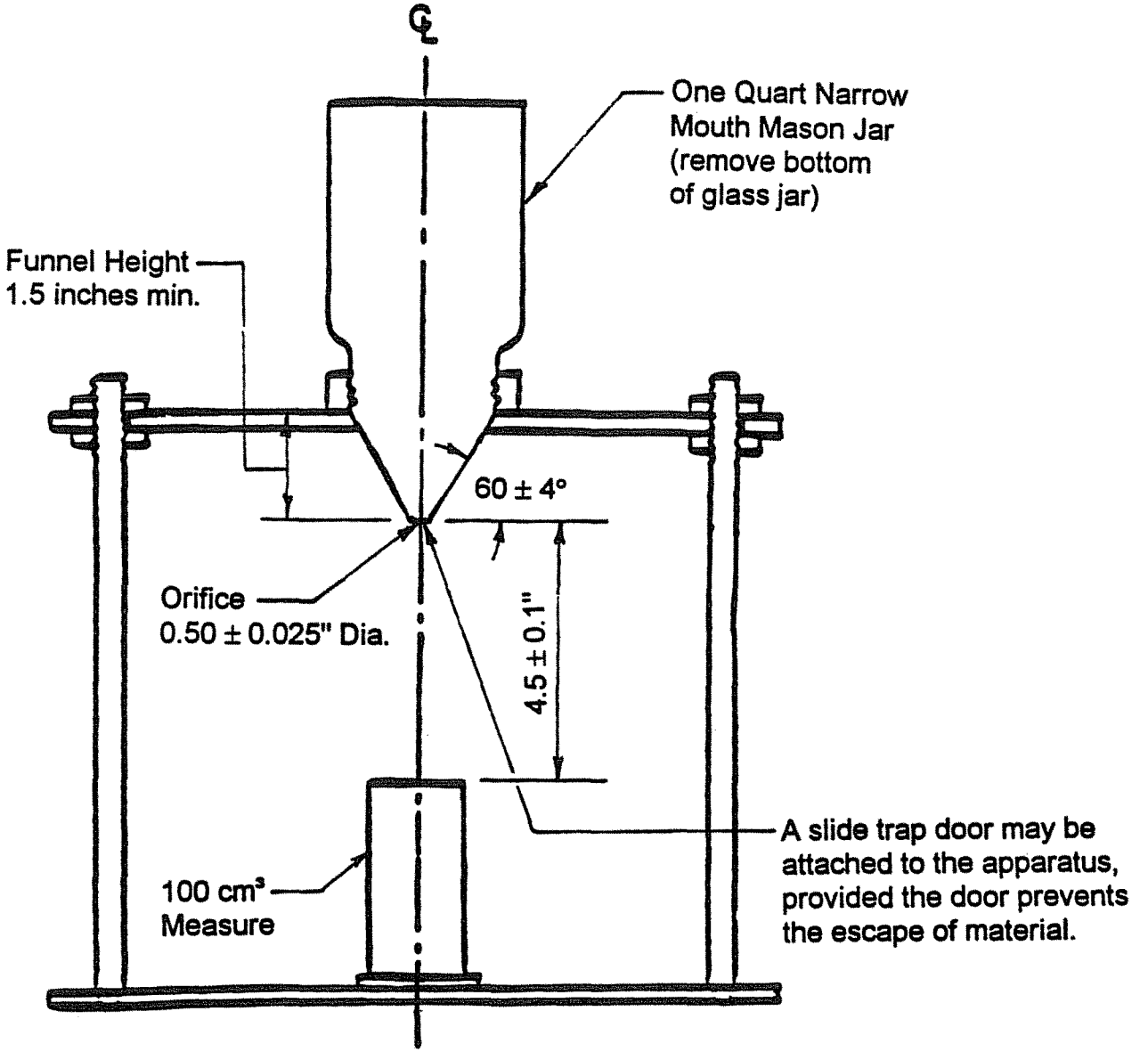

Section Through Center of Apparatus

FIGURE 1

MEASURE

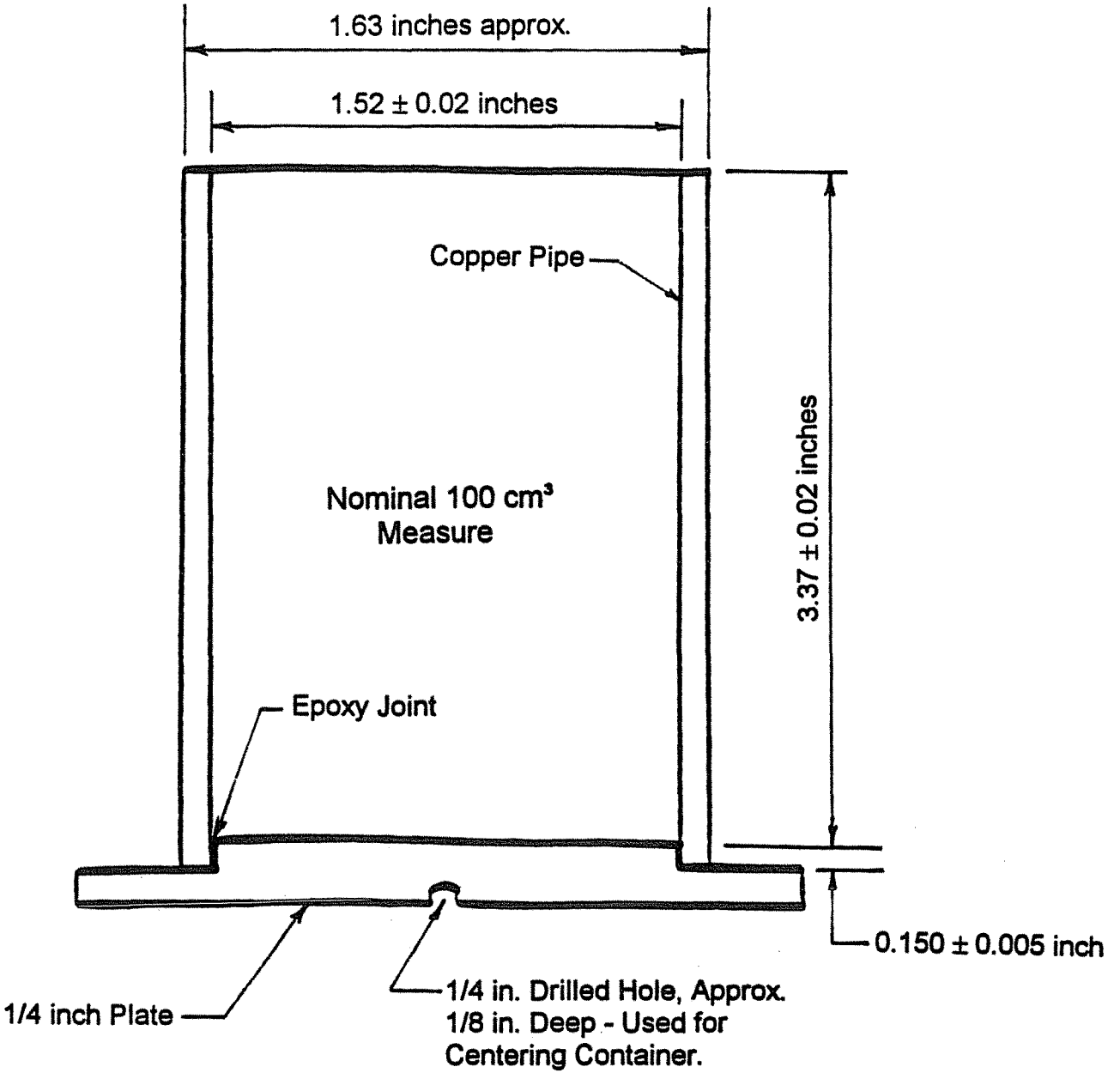

FIGURE 2

ALTERNATE PROCEDURES FOR SIEVING OF COARSE AND FINE GRADED SOILS AND AGGREGATES

(An Arizona Method)

SCOPE

1. (a) This test method contains five alternate procedures for sieving and determining the sieve analysis of fine and coarse graded soils and aggregates.

(b) This test method must be used in conjunction with Arizona Test Method 201. In general, the method for sample preparation, sieving, and calculation of the sieve analysis as described in Arizona Test Method 201 will be followed, with the changes and additional information being outlined and described herein for each alternate procedure shown below.

1) Alternate #1 (Section 2) - Fine screening of aggregate which contains a small amount of Plus No. 4 (100% pass 3/8") material, e.g., fine aggregate for concrete.

2) Alternate #2 (Section 3) - Utilizing a No. 8 screen in the coarse sieving, and a fine sieve analysis not being required.

3) Alternate #3 (Section 4) - Subjecting the entire sample to washing, and a minus No. 4 split for fine screening is not required.

4) Alternate #4 (Section 5) - Subjecting the entire sample to washing, and a minus No. 4 split for fine screening is required.

5) Alternate #5 (Section 6) - Washing of coarse aggregate (Plus No. 4) to remove clinging particles and adjusting the fine sieve analysis.

ALTERNATE #1

2. Fine screening of aggregate which contains a small amount of Plus No. 4 (100% pass 3/8") material, e.g., fine aggregate for concrete. An example of this procedure is shown in Figure 1.

ARIZONA DEPARTMENT OF TRANSPORTATION
SOIL AND AGGREGATE TABULATION

LAB NUMBER	PROJ CODE	ORG NUMBER	MATL	TYPE	PURPOSE	TEST LAB	SIZE	SIZE %
93-2222	7777	8888	FA	+	A	P	-	+

TEST NO.	LOT OR SUFFIX	SAMPLED BY	MO DAY YEAR	TIME
18	+	A. JONES	120893	11:35 ☒ AM ☐ PM

SAMPLED FROM	LIFT NO.	RDWY	STATION	PLUS
STOCKPILE	+	+	+ (IF MILEPOST, INPUT DECIMAL)	

ORIGINAL SOURCE	PROJECT ENGINEER / SUPERVISOR	PROJECT NUMBER	TRACS NUMBER
PIT # 5555	B. SMITH	F-099-9 (99)	H999901C

REMARKS
EXAMPLE FOR FINE SCREENING WHEN FINE AGGREGATE CONTAINS A SMALL AMOUNT OF PLUS No. 4 MATERIAL - (ALTERNATE #1)

ARIZ 201

% OVERSIZE: +3" ☐ ; +6" ☐

COARSE FACTOR: 177936

WET SAMPLE PREWEIGHT = —
WET WT. OF -#4 = —
-#4 SPLIT WET WT. = —

	WEIGHTS RETAINED	% RET.	% PASS	SPECS.	CUMULATIVE % RET. FINENESS MODULUS
3" ☐					
2 1/2"					
2"					
1 1/2"					
1"					
3/4"					
1/2"					
3/8"	0		100	100	
1/4"	8	1	99		
#4	15	3			
-#4	—		96	95-100	
Total	—				

IF TOTAL SAMPLE IS WASHED:
UNWASHED WT. = 562
WASHED WT. = 547
ELUTRIATION = 15

DRY WT. OF -#4 SPLIT: +
FINE FACTOR: —

	WEIGHTS RETAINED	% RET.	% PASS	SPECS.
#8	13	2	94	
#10	42	8	86	
#16	91	16	70	45-80
#30	67	12	58	
#40	123	22	36	
#50	41	7	29	0-30
#100	121	22	7	0-10
#200	24	4		
-#200	2		3.0	0-4
Total	547 (Dry Weight)			
Elutriation	15			

FINENESS MODULUS = TOTAL CUMULATIVE % RET. / 100

T = AASHTO Tests

					SPECS.
Liquid Limit (LL)	T - 89				
Plastic Limit (PL)	T - 90				
Plasticity Index (PI) = LL - PL	T - 90				
Abrasion Method (A,B,C,D)	T - 96				
@ 100 Revolutions				%	%
@ 500 Revolutions				%	%
Absorption, H_2O	T - 85 ARIZ 211			%	
Specific Gravity, SSD	T - 85 ARIZ 211				
Specific Gravity, OD	T - 85 ARIZ 211				
Proctor Method					
Optimum Moisture				%	
Max. Dry Density				PCF	
Sand Equivalent	T - 176 ARIZ 242 (MAFC)				
Fractured Faces Weight (Wf)					
Total Sample Weight (Wa)					
Fractured Faces (FF) = Wf/Wa x 100	ARIZ 212			%	%
Wet Weight (W)				g	
Dry Weight (D)				g	
Moisture Content = (W-D)/D x 100	T - 255 T - 265			%	
Flakiness Index	ARIZ 233			%	%
Carbonates	ARIZ 238			%	%
pH	ARIZ 238 OR 237				
Resistivity (ohm-cm)	ARIZ 238				
Soluble Salts (PPM)	ARIZ 237				

A - ARIZ 225
C - ARIZ 226
D - ARIZ 226
AD - ARIZ 245
AI - ARIZ 232
ADI - ARIZ 246

WHITE ☒
YELLOW ☐
BLUE ☐

RECEIVED DATE	TEST OPERATOR & DATE	SUPERVISOR & DATE
12-08-93	Joe Dogood 12-08-93	Ted Hendman 12-08-93

44-0333 R9/93

FIGURE 1

(a) A representative minimum 500 gram sample is obtained and dried to constant weight. Allow the sample to cool, and record the weight to the nearest gram as the "Unwashed Wt", (562 in the example).

(b) Subject the sample to either mechanical or hand washing.

(c) Dry the sample to constant weight and allow to cool. Record weight to the nearest gram as "Washed Wt" and also as the fine sieve "Total Dry Weight", (547).

(d) Determine and record "Elutriation" by subtracting the "Washed Wt" from the "Unwashed Wt", (562 - 547 = 15).

(e) Additional sieves (Plus No. 4) as required are added to the nest of sieves used in the fine screening.

(f) The sample is subjected to screening and the weight retained on each sieve and in the pan is recorded.

(g) The sum of the individual weights retained for each sieve is compared to the weight of sample prior to sieving (Washed Wt. or fine sieve Total Dry Weight). Adjust or resieve as necessary.

(h) Determine the sieve analysis of the material. The factor for calculating the sieve analysis is determined by dividing 100 by the "Unwashed Wt", (100/562 = 0.177936). The calculation of the percent passing each sieve is continuous through the entire sieve analysis.

ALTERNATE #2

3. Utilizing a No. 8 screen in the coarse sieving, and a fine sieve analysis not being required. An example is given in Figure 2.

(a) A representative sample is obtained and the weight recorded as the "Coarse Sieve Total", (14683 in the example).

(b) Subject the sample to coarse sieving using the No. 8 as the smallest sieve. If desired, the material may be screened using a No. 4 as the smallest sieve, and the pass No. 4 material further separated into No. 8 and pass No. 8 fractions.

ARIZONA DEPARTMENT OF TRANSPORTATION
SOIL AND AGGREGATE TABULATION

LAB NUMBER	PROJ CODE	ORG NUMBER	MATL	TYPE	PURPOSE	TEST LAB	SIZE	SIZE %
93-3333	7777	8888	CA	57	A	P	-	+

TEST NO.	LOT OR SUFFIX	SAMPLED BY	MO DAY YEAR	TIME
6	+	A. JONES	12 02 93	2:40 ☐ AM ☒ PM

SAMPLED FROM	LIFT NO.	RDWY	STATION	PLUS
STOCKPILE	+	+	+	

IF MILEPOST, INPUT DECIMAL

ORIGINAL SOURCE	PROJECT ENGINEER / SUPERVISOR	PROJECT NUMBER	TRACS NUMBER
PIT # 5555	B. SMITH	F-099-9(99)	H999901C

REMARKS
EXAMPLE FOR USING A No. 8 SIEVE IN THE COARSE SIEVING AND NO FINE SIEVE ANALYSIS REQUIRED - (ALTERNATE #2).

ARIZ 201

% OVERSIZE: +3" ☐ ; +6" ☐

COARSE FACTOR: .006811

WET SAMPLE PREWEIGHT =
WET WT. OF -#4 =
- #4 SPLIT WET WT. =

	WEIGHTS RETAINED	% RET.	% PASS	SPECS.	CUMULATIVE % RET. FINENESS MODULUS
3" ☐					
2 1/2"					
2"					
1 1/2"	0		100	100	
1"	505	3	97	95-100	
3/4"	2850	20	77		
1/2"	4410	30	47	25-60	
3/8"	2350	16	31		
1/4"	1915	13	18		
#4	1325	9			
-#4	—		9	0-10	
Total	14683				

IF TOTAL SAMPLE IS WASHED:
UNWASHED WT. =
WASHED WT. =
ELUTRIATION =

DRY WT. OF-#4 SPLIT: + ; FINE FACTOR: —

	WEIGHTS RETAINED	% RET.	% PASS	SPECS.	
#8	1255	9	—		
-#8 #10	73	—	0	0-5	
#16					
#30					
#40					
#50					
#100					
#200					
-#200				0-1.0	
Total					
Elutriation					

Dry Weight

FINENESS MODULUS = TOTAL CUMULATIVE % RET. / 100

T = AASHTO Tests

					SPECS.
Liquid Limit (LL)	T-89				
Plastic Limit (PL)	T-90				
Plasticity Index (PI) = LL - PL	T-90				
Abrasion Method (A,B,C,D)	T-96				
@ 100 Revolutions				%	%
@ 500 Revolutions				%	%
Absorption, H_2O	T-85 ARIZ 211			%	
Specific Gravity, SSD	T-85 ARIZ 211				
Specific Gravity, OD	T-85 ARIZ 211				
Proctor Method					
Optimum Moisture				%	
Max. Dry Density				PCF	
Sand Equivalent	T-176 ARIZ 242 (MAFC)				
Fractured Faces Weight (Wf)					
Total Sample Weight (Wa)					
Fractured Faces (FF) = $\frac{Wf}{Wa}$ x 100	ARIZ 212			%	%
Wet Weight (W)				g	
Dry Weight (D)				g	
Moisture Content = $\frac{W-D}{D}$ x 100	T-255 T-265			%	
Flakiness Index	ARIZ 233			%	%
Carbonates	ARIZ 239			%	%
pH	ARIZ 236 OR 237				
Resistivity (ohm-cm)	ARIZ 236				
Soluble Salts (PPM)	ARIZ 237				

A - ARIZ 225
C - ARIZ 226
D - ARIZ 226
AD - ARIZ 245
AI - ARIZ 232
ADI - ARIZ 246

WHITE ☒
YELLOW ☐
BLUE ☐

RECEIVED DATE	TEST OPERATOR & DATE	SUPERVISOR & DATE
12-02-93	JOE DOGOOD 12-03-93	TED HEADMAN 12-03-93

44-0363 R9/93

FIGURE 2

(c) The weight of material retained on each of the sieves No. 8 and larger, and the weight of pass No. 8 material is recorded on the laboratory sieve analysis card, modifying the card for the pass No. 8 material as shown in the example.

(d) The sum of the individual weights retained for each sieve is compared to the weight of the sample prior to sieving (Coarse Sieve Total). Adjust or resieve as needed.

(e) Determine the sieve analysis of the material. The coarse sieve factor is determined by dividing 100 by the "Coarse Sieve Total", (100/14683 = 0.006811). The calculation of the percent passing each sieve is continuous through the entire sieve analysis.

ALTERNATE #3

4. Subjecting the entire sample to washing, and a minus No. 4 split for fine screening is <u>not</u> required. An example of this procedure is given in Figure 3.

(a) A representative sample is be obtained, dried to constant weight, allowed to cool, and the weight recorded as the "Coarse Sieve Total" and also as the "Unwashed Weight", (1137 in the example).

(b) Subject the sample to hand washing.

(c) Dry the sample to constant weight and allow to cool. The weight of the sample is recorded as the "Washed Wt", (1118).

(d) Determine "Elutriation" by subtracting the "Washed Wt" from the "Unwashed Wt", (1137 - 1118 = 19).

(e) Subject the sample to coarse screening and record the weight retained on each sieve and in the pan, except the weight of pass No. 4 material is not recorded in the coarse sieve area, but rather as the fine sieve "Total Dry Weight", (468).

(f) Determine and record the weight of pass No. 4 for coarse sieve analysis by adding the "elutriation" and the fine sieve "Total Dry Weight", (468 + 19 = 487).

(g) The sum of the individual weights retained for each sieve is compared to the weight of sample prior to sieving (Washed Wt.). Adjust or resieve as necessary.

ARIZONA DEPARTMENT OF TRANSPORTATION
SOIL AND AGGREGATE TABULATION

LAB NUMBER	PROJ CODE	ORG NUMBER	MATL	TYPE	PURPOSE	TEST LAB	SIZE	SIZE %
93-5555	7777	8888	AA	FC	A	P	-	+

TEST NO.	LOT OR SUFFIX	SAMPLED BY	MO DAY YEAR	TIME
3	+	A. JONES	10 07 93	12:10 ☐ AM ☒ PM

SAMPLED FROM	LIFT NO.	RDWY	STATION	PLUS
COLD FEED	+	+	- + (IF MILEPOST, INPUT DECIMAL)	

ORIGINAL SOURCE	PROJECT ENGINEER / SUPERVISOR	PROJECT NUMBER	TRACS NUMBER
PIT # 4444	B. SMITH	F-099-9(99)	H999901C

REMARKS
EXAMPLE WHEN ENTIRE SAMPLE IS WASHED AND A MINUS No. 4 SPLIT FOR FINE SIEVING IS NOT REQUIRED - (ALTERNATE # 3).

ARIZ 201

% OVERSIZE: +3" ☐ ; +6" ☐

COARSE FACTOR: .087951

WET SAMPLE PREWEIGHT = —
WET WT. OF -#4 = —
-#4 SPLIT WET WT. = —

468+19 = 487

	WEIGHTS RETAINED	% RET.	% PASS	SPECS.	CUMULATIVE % RET. FINENESS MODULUS
3" ☐					
2 1/2"					
2"					
1 1/2"					
1"					
3/4"					
1/2"					
3/8"	0		100	100	
1/4"	269	24	76		
#4	381	33			
-#4	487		43	33-45	
Total	1137				

IF TOTAL SAMPLE IS WASHED:
UNWASHED WT. = 1137
WASHED WT. = 1118
ELUTRIATION = 19

DRY WT. OF -#4 SPLIT: + ; FINE FACTOR: —

	WEIGHTS RETAINED	% RET.	% PASS	SPECS.	
#8	32	30	13	6-18	
#10	23	2	11		
#16	34	3	8		
#30	11	1	7		
#40	22	2	5		
#50	12	1	4		
#100	10	1	3		
#200	13	1			
-#200	1	✓	1.8	0-3.8	
Total (Dry Weight)	468				
Elutriation	19				

FINENESS MODULUS = TOTAL CUMULATIVE % RET. / 100

T = AASHTO Tests

				SPECS.
Liquid Limit (LL)	T - 89			
Plastic Limit (PL)	T - 90			
Plasticity Index (PI) = LL - PL	T - 90			
Abrasion Method (A,B,C,D)	T - 96			
@ 100 Revolutions			%	%
@ 500 Revolutions			%	%
Absorption, H_2O	T - 85 ARIZ 211		%	
Specific Gravity, SSD	T - 85 ARIZ 211			A - ARIZ 225
Specific Gravity, OD	T - 85 ARIZ 211			C - ARIZ 226
Proctor Method				D - ARIZ 226
Optimum Moisture			%	AD - ARIZ 245
Max. Dry Density			PCF	AI - ARIZ 232
Sand Equivalent	T - 176 ARIZ 242 (MAFC)			ADI - ARIZ 246
Fractured Faces Weight (Wf)				
Total Sample Weight (Wa)				
Fractured Faces (FF) = Wf/Wa x 100	ARIZ 212		%	%
Wet Weight (W)			g	
Dry Weight (D)			g	
Moisture Content = (W-D)/D x 100	T - 255 T - 265		%	
Flakiness Index	ARIZ 233		%	%
Carbonates	ARIZ 238		%	%
pH	ARIZ 236 OR 237			
Resistivity (ohm-cm)	ARIZ 236			
Soluble Salts (PPM)	ARIZ 237			

WHITE ☒ YELLOW ☐ BLUE ☐

RECEIVED DATE	TEST OPERATOR & DATE	SUPERVISOR & DATE
10-07-93	Joe Dogood 10-07-93	Ted Headman 10-08-93

44-6353 R9/93

FIGURE 3

(h) Sieve the pass No. 4 material and record the weight retained for each sieve and in the pan.

(i) The sum of the individual weights retained for each sieve is compared to the weight of sample prior to sieving (fine sieve Total Dry Weight). Adjust or resieve as necessary.

(j) Determine the sieve analysis of the material. The coarse sieve factor is determined by dividing 100 by the "Coarse Sieve Total", (100/1137 = 0.087951). A fine sieve factor is not determined. The calculation of the percent passing each sieve is continuous through the entire sieve analysis.

ALTERNATE #4

5. Subjecting the entire sample to washing, and a minus No. 4 split for fine screening <u>is</u> required. An example of this procedure is given in Figure 4.

(a) A representative sample is obtained, dried to constant weight, allowed to cool, and the weight recorded as the "Coarse Sieve Total" and also as the "Unwashed Weight", (4893 in the example).

(b) Subject the sample to hand washing.

(c) Dry the sample to constant weight and allow to cool. The weight of the sample is recorded as the "Washed Wt", (4674).

(d) The elutriation of the total sample is determined by subtracting the "Washed Wt" from the "Unwashed Wt", (4893 - 4674 = 219).

(e) The sample shall be subjected to coarse screening and the weight retained on each sieve and in the pan is recorded, except the weight of pass No. 4 material is not recorded in the coarse sieve area, but rather as "Wt. of - #4" (2521).

(f) The sum of the individual weights retained for each sieve is compared to the weight of sample prior to sieving (Washed Wt.). Adjust or resieve as necessary.

(g) The passing No. 4 weight for coarse sieve analysis is the combination of the weight of pass No. 4 and the elutriation of the total sample, (2521 + 219 = 2740).

(h) The weight of the passing No. 4 material split for fine sieving is recorded as the fine sieve "Total Dry Weight", (665).

ARIZONA DEPARTMENT OF TRANSPORTATION
SOIL AND AGGREGATE TABULATION

LAB NUMBER	PROJ CODE	ORG NUMBER	MATL	TYPE	PURPOSE	TEST LAB	SIZE	SIZE %
93-1111	7777	8888	TS	+	A	P	-	+

TEST NO.	LOT OR SUFFIX	SAMPLED BY	MO DAY YEAR	TIME
8	+	A. JONES	12 28 93	9:30 ☒ AM ☐ PM

SAMPLED FROM	LIFT NO.	RDWY	STATION	PLUS
STOCKPILE	+	+	+	IF MILEPOST, INPUT DECIMAL

ORIGINAL SOURCE	PROJECT ENGINEER / SUPERVISOR	PROJECT NUMBER	TRACS NUMBER
PIT # 3333	B. SMITH	F-099-9(99)	H999901C

REMARKS
EXAMPLE WHEN ENTIRE SAMPLE IS WASHED AND A MINUS No. 4 SPLIT FOR FINE SIEVING IS REQUIRED - (ALTERNATE # 4).

ARIZ 201

% OVERSIZE: +3" ☐ ___ +6" ☐ ___

COARSE FACTOR: 020437

WET SAMPLE PREWEIGHT = —
WET WT. OF -#4 = 2521
-#4 SPLIT WET WT. = —

2521 + 219 = 2740

	WEIGHTS RETAINED	% RET.	% PASS	SPECS.	CUMULATIVE % RET. FINENESS MODULUS
3" ☐					
2 1/2"					
2"				100	
1 1/2"					
1"					
3/4"	0		100		
1/2"	270	6	94	85-100	
3/8"	613	12	82		
1/4"	928	19	63		
#4	342	7			
-#4	2740	✓	56		
Total	4893				

IF TOTAL SAMPLE IS WASHED:
UNWASHED WT. = 4893
WASHED WT. = 4674
ELUTRIATION = 219

DRY WT. OF-#4 SPLIT: 723

FINE FACTOR: 077455

665 / 1252 x 219 = 58

	WEIGHTS RETAINED	% RET.	% PASS	SPECS.	
#8	65	5	51		
#10	26	2	49		
#16	104	8	41		
#30	27	2	39		
#40	39	3	36	35-100	
#50	181	14	22		
#100	117	9	13		
#200	103	8			
-#200	3	✓	4.7		
Total	665 Dry Weight				
Elutriation	58				

FINENESS MODULUS = TOTAL CUMULATIVE % RET. / 100

T = AASHTO Tests

				SPECS.
Liquid Limit (LL)	T - 89			
Plastic Limit (PL)	T - 90			
Plasticity Index (PI) = LL - PL	T - 90			
Abrasion Method (A,B,C,D)	T - 96			
@ 100 Revolutions			%	%
@ 500 Revolutions			%	%
Absorption, H_2O	T - 85 ARIZ 211		%	
Specific Gravity, SSD	T - 85 ARIZ 211			A - ARIZ 225
Specific Gravity, OD	T - 85 ARIZ 211			C - ARIZ 226
Proctor Method				D - ARIZ 226
Optimum Moisture			%	AD - ARIZ 245
Max. Dry Density			PCF	AI - ARIZ 232
Sand Equivalent	T - 176 ARIZ 242 (MAFC)			ADI - ARIZ 246
Fractured Faces Weight (Wf)				
Total Sample Weight (Wa)				
Fractured Faces (FF) = Wf/Wa x 100	ARIZ 212		%	%
Wet Weight (W)			g	
Dry Weight (D)			g	
Moisture Content = (W-D)/D x 100	T - 255 T - 265		%	
Flakiness Index	ARIZ 233		%	%
Carbonates	ARIZ 238		%	%
pH	ARIZ 236 OR 237			
Resistivity (ohm-cm)	ARIZ 236			
Soluble Salts (PPM)	ARIZ 237			

WHITE ☒
YELLOW ☐
BLUE ☐

RECEIVED DATE	TEST OPERATOR & DATE	SUPERVISOR & DATE
12-28-93	JOE DOGOOD 12-28-93	TED HEADMAN 12-28-93

44-0333 R8/93

FIGURE 4

(i) The elutriation value for fine sieve analysis is determined as follows:

$$\text{Elutriation for Fine Sieve Analysis} = \frac{\left[\begin{array}{c}\text{Wt. of Passing No. 4}\\ \text{Material Split for Fine}\\ \text{Sieving, (Fine Sieve}\\ \text{"Total Dry Weight"}\end{array}\right]}{\left[\text{Wt. of - \#4}\right]} \times \left[\begin{array}{c}\text{Elutriation}\\ \text{of}\\ \text{Total Sample}\end{array}\right]$$

In the example in Figure 4:

Elutriation for Fine Sieve Analysis = (665/2521) x 219 = 58

(j) The "Dry Wt. of Pass #4 Split" is determined by adding the fine sieve total dry weight and the calculated elutriation for fine sieve analysis, (665 + 58 = 723).

(k) The pass No. 4 material is sieved and the weight retained for each sieve and in the pan is recorded.

(l) The sum of the individual weights retained for each sieve is compared to the weight of sample prior to sieving (fine sieve Total Dry Weight). Adjust or resieve as necessary.

(m) Determine the sieve analysis of the material.

ALTERNATE #5

6. Washing of coarse aggregate (Plus No. 4) to remove clinging particles and adjusting the fine sieve analysis. An example of this procedure is shown in Figures 5 and 6.

(a) A representative sample shall be prepared, screened, and the sieve analysis calculated as described in Arizona Test Method 201. (When this alternate procedure is used as a referee method, the sample shall be dried to constant weight prior to sieving.)

ARIZONA DEPARTMENT OF TRANSPORTATION
SOIL AND AGGREGATE TABULATION

LAB NUMBER	PROJ CODE	ORG NUMBER	MATL	TYPE	PUR POSE	TEST LAB	SIZE	SIZE %
93-9999	7777	8888	SB	+	A	P	-	+

TEST NO.	LOT OR SUFFIX	SAMPLED BY	MO DAY YEAR	TIME
12	+	A. JONES	11 15 93	4:25 ☐ AM ☒ PM

SAMPLED FROM	LIFT NO.	RDWY	STATION PLUS
SITE	+	EB	112+50 (IF MILEPOST, INPUT DECIMAL)

ORIGINAL SOURCE	PROJECT ENGINEER / SUPERVISOR	PROJECT NUMBER	TRACS NUMBER
PIT # 3333	B. SMITH	F-099-9(99)	H999901C

REMARKS
EXAMPLE OF WASHING COARSE (PLUS No. 4) AGGREGATE AND ADJUSTING FINE SIEVE ANALYSIS - (ALTERNATE #5).

ARIZ 201

% OVERSIZE: +3" ☐ ; +6" ☐

COARSE FACTOR: .004418

WET SAMPLE PREWEIGHT = 22960
WET WT. OF -#4 = 11400
- #4 SPLIT WET WT. = 558

	WEIGHTS RETAINED	% RET.	% PASS	SPECS.	CUMULATIVE % RET. FINENESS MODULUS
3" ☐				100	
2 1/2"	0		100		
2"	2420	11	89		
1 1/2"	1380	6	83		
1"	1020	4	79		
3/4"	2920	13	66	60-100	
1/2"	1120	5	61		
3/8"	440	2	59		
1/4"	1340	6	53		
#4	920	4			
-#4	1107	✓	49		
Total	22633				

IF TOTAL SAMPLE IS WASHED:
UNWASHED WT. = –
WASHED WT. = –
ELUTRIATION = –

DRY WT. OF-#4 SPLIT: 542

FINE FACTOR: .090406

	WEIGHTS RETAINED	% RET.	% PASS	SPECS.	
#8	101	9	40	35-80	
#10	20	2	38		
#16	53	5	33		
#30	87	8	25		
#40	46	4	21		
#50	42	4	17		
#100	33	3	14		
#200	35	2 3			
-#200	2	✓	11.3	0-12	
Total	419 (Dry Weight)		11.6		
Elutriate	123				

FINENESS MODULUS = TOTAL CUMULATIVE % RET. / 100

T = AASHTO Tests

						SPECS.
Liquid Limit (LL)	T - 89					
Plastic Limit (PL)	T - 90					
Plasticity Index (PI) = LL - PL	T - 90					
Abrasion Method (A,B,C,D)	T - 96					
@ 100 Revolutions					%	%
@ 500 Revolutions					%	%
Absorption, H_2O	T - 85 ARIZ 211				%	
Specific Gravity, SSD	T - 85 ARIZ 211					
Specific Gravity, OD	T - 85 ARIZ 211					
Proctor Method						
Optimum Moisture					%	
Max. Dry Density					PCF	
Sand Equivalent	T - 176 ARIZ 242 (MAFC)					
Fractured Faces Weight (Wf)						
Total Sample Weight (Wa)						
Fractured Faces (FF) = $\frac{Wf}{Wa}$ x 100	ARIZ 212				%	%
Wet Weight (W)					g	
Dry Weight (D)					g	
Moisture Content = $\frac{W-D}{D}$ x 100	T - 255 T - 265				%	
Flakiness Index	ARIZ 233				%	%
Carbonates	ARIZ 238				%	%
pH	ARIZ 236 OR 237					
Resistivity (ohm-cm)	ARIZ 236					
Soluble Salts (PPM)	ARIZ 237					

A - ARIZ 225
C - ARIZ 226
D - ARIZ 228
AD - ARIZ 245
AI - ARIZ 232
ADI - ARIZ 246

WHITE ☒
YELLOW ☐
BLUE ☐

RECEIVED DATE	TEST OPERATOR & DATE	SUPERVISOR & DATE
11-15-93	Joe Dagood 11-16-93	Ted Headman 11-16-93

44-0353 R2/93

FIGURE 5

DETERMINATION OF PERCENT MINUS NO. 200 ON COARSE AGGREGATE AND TOTAL PERCENT PASS NO. 200 IN SAMPLE

Project No. F-099-9(99) / H999901C Lab. No. 93-9999

Unwashed Weight of Plus No. 4 = 4967

Washed Weight of Plus No. 4 = 4941

Calculate the "Percent Minus No. 200 on Coarse Aggregate" by the following, and record result to the nearest 0.01%:

$$\text{Percent Minus No. 200 on Coarse Aggregate} = \frac{\text{Unwashed Weight of Plus No. 4} - \text{Washed Weight of Plus No. 4}}{\text{Unwashed Weight of Plus No. 4}} \times 100$$

$$= \frac{(4967) - (4941)}{(4967)} \times 100$$

Percent Minus No. 200 on Coarse Aggregate = 0.52

Calculate the "Total Percent Pass No. 200 in Sample" by the following, and record result to the nearest 0.1%:

$$\text{Total Percent Pass No. 200 in Sample} = \text{\% Pass No. 200 from Fine Sieving} + \left[\frac{[100 - (\text{\% Pass No. 4})] \times (\text{Percent Minus No. 200 on Coarse Aggregate})}{100}\right]$$

$$= (11.3) + \left[\frac{[100 - (49)] \times (0.52)}{100}\right]$$

Total Percent Pass No. 200 in Sample = 11.6

FIGURE 6

(b) Either the entire amount, or a representative sample of approximately 5000 grams, whichever is less, of the Plus No. 4 material from screening shall be combined, dried to constant weight, allowed to cool, and the weight recorded as the "Unwashed Weight of Plus No. 4", (4967 in the example in Figure 6).

(c) Subject the sample to hand washing.

(d) Dry the sample to constant weight and allow to cool. Record the weight to at least the nearest gram as the "Washed Weight of Plus No. 4", (4941 in the example in Figure 6).

(e) Utilizing the equations shown in Figure 6, determine and record the "Percent Minus No. 200 on Coarse Aggregate" to the nearest 0.01%, (0.52); and the "Total Percent Pass No. 200 in Sample" to the nearest 0.1%, (11.6).

(f) Compare the percent Pass No. 200 from fine sieving with the "Total Percent Pass No. 200 in Sample". If the difference is less than or equal to 1.0, replace the percent Pass No. 200 from fine sieving with the "Total Percent Pass No. 200 in Sample" and, if necessary, adjust the value for percent retained on the No. 200 sieve. (In the example in Figure 5, the 11.3 percent Pass No. 200 from fine sieving has been replaced with the 11.6 "Total Percent Pass No. 200 in Sample", and the percent retained on the No. 200 sieve has been adjusted from 3 to 2.) If the difference is greater than 1.0, another sample shall be obtained and the entire sample subjected to washing and the gradation determined as specified in Section 4 or 5.

REPORT

7. (a) The sieve analysis shall be reported as shown in Figures 1 through 5 for the particular example which is applicable.

(b) When applicable, the determination of "Percent Minus No. 200 on Coarse Aggregate" and "Total Percent Pass No. 200 in Sample" is reported as shown in the example given in Figure 6.

(c) A blank Soils and Aggregate Tabulation laboratory card is provided in Figure 7.

(d) A blank form for the determination of "Percent Minus No. 200 on Coarse Aggregate" and "Total Percent Pass No. 200 in Sample" is provided in Figure 8.

ARIZONA DEPARTMENT OF TRANSPORTATION
SOIL AND AGGREGATE TABULATION

LAB NUMBER | PROJ CODE | ORG NUMBER | MATL | TYPE | PUR-POSE | TEST LAB | SIZE | SIZE %

TEST NO. | LOT OR SUFFIX | SAMPLED BY | MO DAY YEAR | TIME ☐ AM ☐ PM

SAMPLED FROM | LIFT NO. | RDWY | STATION PLUS + IF MILEPOST, INPUT DECIMAL

ORIGINAL SOURCE | PROJECT ENGINEER / SUPERVISOR | PROJECT NUMBER | TRACS NUMBER

REMARKS

ARIZ 201

% OVERSIZE: +3" ☐ +6" ☐

COARSE FACTOR

WET SAMPLE PREWEIGHT = _____
WET WT. OF -#4 = _____
- #4 SPLIT WET WT. = _____

	WEIGHTS RETAINED	% RET.	% PASS	SPECS.	CUMULATIVE % RET. FINENESS MODULUS
3" ☐					
2 1/2"					
2"					
1 1/2"					
1"					
3/4"					
1/2"					
3/8"					
1/4"					
#4					
-#4					
Total					

IF TOTAL SAMPLE IS WASHED:
UNWASHED WT. = _____
WASHED WT. = _____
ELUTRIATION = _____

DRY WT. OF-#4 SPLIT | FINE FACTOR

	WEIGHTS RETAINED	% RET.	% PASS	SPECS.
#8				
#10				
#16				
#30				
#40				
#50				
#100				
#200				
-#200				
Total				
Elutriation				

Dry Weight

T = AASHTO Tests

					SPECS.
Liquid Limit (LL)	T - 89				
Plastic Limit (PL)	T - 90				
Plasticity Index (PI) = LL - PL	T - 90				
Abrasion Method (A,B,C,D)	T - 96				
@ 100 Revolutions				%	%
@ 500 Revolutions				%	%
Absorption, H_2O	T - 85 ARIZ 211			%	
Specific Gravity, SSD	T - 85 ARIZ 211				
Specific Gravity, OD	T - 85 ARIZ 211				
Proctor Method					A - ARIZ 225 C - ARIZ 226 D - ARIZ 226 AD - ARIZ 245 AI - ARIZ 232 ADI - ARIZ 246
Optimum Moisture				%	
Max. Dry Density				PCF	
Sand Equivalent	T - 176 ARIZ 242 (MAFC)				
Fractured Faces Weight (Wf)					
Total Sample Weight (Wa)					
Fractured Faces (FF) = $\frac{Wf}{Wa}$ x 100	ARIZ 212			%	%
Wet Weight (W)				g	
Dry Weight (D)				g	
Moisture Content = $\frac{W-D}{D}$ x 100	T - 255 T - 265			%	
Flakiness Index	ARIZ 233			%	%
Carbonates	ARIZ 238			%	%
pH	ARIZ 236 OR 237				
Resistivity (ohm-cm)	ARIZ 236				
Soluble Salts (PPM)	ARIZ 237				

FINENESS MODULUS = $\frac{\text{TOTAL CUMULATIVE \% RET.}}{100}$

WHITE ☐
YELLOW ☐
BLUE ☐

RECEIVED DATE | TEST OPERATOR & DATE | SUPERVISOR & DATE

44-9383 R3/93

FIGURE 7

DETERMINATION OF PERCENT MINUS NO. 200 ON COARSE AGGREGATE AND TOTAL PERCENT PASS NO. 200 IN SAMPLE

Project No. _____ Lab. No. _____

Unwashed Weight of Plus No. 4 = _____

Washed Weight of Plus No. 4 = _____

Calculate the "Percent Minus No. 200 on Coarse Aggregate" by the following, and record result to the nearest 0.01%:

$$\text{Percent Minus No. 200 on Coarse Aggregate} = \frac{\text{Unwashed Weight of Plus No. 4} - \text{Washed Weight of Plus No. 4}}{\text{Unwashed Weight of Plus No. 4}} \times 100$$

$$= \frac{(\qquad) - (\qquad)}{(\qquad)} \times 100$$

Percent Minus No. 200 on Coarse Aggregate = _____

Calculate the "Total Percent Pass No. 200 in Sample" by the following, and record result to the nearest 0.1%:

$$\text{Total Percent Pass No. 200 in Sample} = \text{\% Pass No. 200 from Fine Sieving} + \left[\frac{[100 - (\text{\% Pass No. 4})] \times (\text{Percent Minus No. 200 on Coarse Aggregate})}{100}\right]$$

$$= (\qquad) + \left[\frac{[100 - (\qquad)] \times (\qquad)}{100}\right]$$

Total Percent Pass No. 200 in Sample = _____

FIGURE 8

REMOLDED RING SAMPLES FOR DIRECT SHEAR, SWELL, AND CONSOLIDATION

(An Arizona Method)

SCOPE

1. (a) This procedure describes the method used to prepare remolded ring samples of soil for further testing of direct shear, swell, and consolidation. Samples are generally remolded at 95% or 97% of proctor maximum dry density and at minus 3% of optimum moisture. These values can be changed to suit the person ordering the test.

(b) This test method may involve hazardous material, operations, or equipment. This test method does not purport to address all of the safety concerns associated with its use. It is the responsibility of the user to consult and establish appropriate safety and health practices and determine the applicability of any regulatory limitations prior to use.

(c) See Appendix A1 of the Materials Testing Manual for information regarding the procedure to be used for rounding numbers to the required degree of accuracy.

(d) Metric (SI) units and values are shown in this test method with English units and values following in parentheses. Values given for metric and English units may be numerically equivalent (soft converted) for the associated units, or they may be given as rounded or rationalized values (hard converted). Either the metric or English units along with their corresponding values shall be used in accordance with applicable specifications. See Appendix A2 of the Materials Testing Manual for additional information on the metric system.

APPARATUS

2. Requirements for the frequency of equipment calibration and verification are found in Appendix A3 of the Materials Testing Manual. Apparatus for this test procedure shall consist of the following:

(a) Brass ring(s) with an inside diameter of 61.47 ± 0.03 mm (2.420 ± 0.001 inches), a height of 25.40 ± 0.05 mm (1.000 ± 0.002 inch), and a nominal wall thickness of 1.02 mm (0.040 inches). The brass ring(s) shall fit snugly inside the loading cylinder with no discernible free play in any direction.

(b) Baseplate and loading cylinder, as shown in Figure 1.

(c) Metal ram with a nominal outside diameter of 63.5 mm (2.5 inches).

NOTE: The brass ring(s), baseplate, loading cylinder, and ram should be free of bumps, dents, scratches, rust, dirt, and corrosion.

(d) Rubber mallet.

(e) A balance or scale capable of measuring the maximum weight to be determined and conforming to the requirements of AASHTO M 231, except the readability and sensitivity of any balance utilized shall be at least 0.1 gram.

SAMPLING

3. (a) Obtain 34 to 45 kilograms (75 to 100 pounds) of material for a proctor density test.

(b) For the remolded ring samples, obtain 600 grams of minus 4.75 mm (No. 4) material from material for proctor density test. This amount of material is sufficient to remold 3 ring samples. Material should be split in accordance with AASHTO T 248.

NOTE: Direct shears require 3 rings. Swell and consolidation tests require only 1 ring.

(c) Obtain approximately 100 grams of the minus 4.75 mm (No. 4) material for determination of percent hydroscopic moisture content.

PROCEDURE

4. (a) Determine the percent hydroscopic moisture content of the minus 4.75 mm (No. 4) material in accordance with AASHTO T 265.

(b) Perform a Method A Proctor Density test in accordance with Arizona Test Method 225 or 232.

(c) When the weight of soil and water "W_2" has been calculated as shown in the examples given in Figure 2 and Figure 3 (a blank worksheet is given in Figure 4), the soil and water must be thoroughly mixed, put into a sealed container, and left to cure for at least 12 hours.

(d) After the soil has cured, the ring is ready to be loaded. Place ring in the bottom of the assembled baseplate and loading cylinder. Using a funnel, pour the soil mix into the cylinder. If it is necessary, gently tamp the material with your fingers. When all of the soil is loaded into the cylinder, insert the ram.

(e) Using the rubber mallet, strike the ram 3 or 4 times. Remove the ram from the cylinder and, using a spatula, clean the soil from edge of ring. Insert ram and strike it 2 or 3 times.

(f) Remove the ram from the cylinder and inspect the ring. If the ring is not showing, clean the soil from the edge of the ring using spatula, insert ram, and strike 2 or 3 times. If the ring is showing, remove loading cylinder from baseplate, and push the ring and soil gently out using the ram.

(g) From this point on, direct shears follow ASTM D 3080, swell tests follow ASTM D 4546, and consolidation tests follow ASTM D 2435.

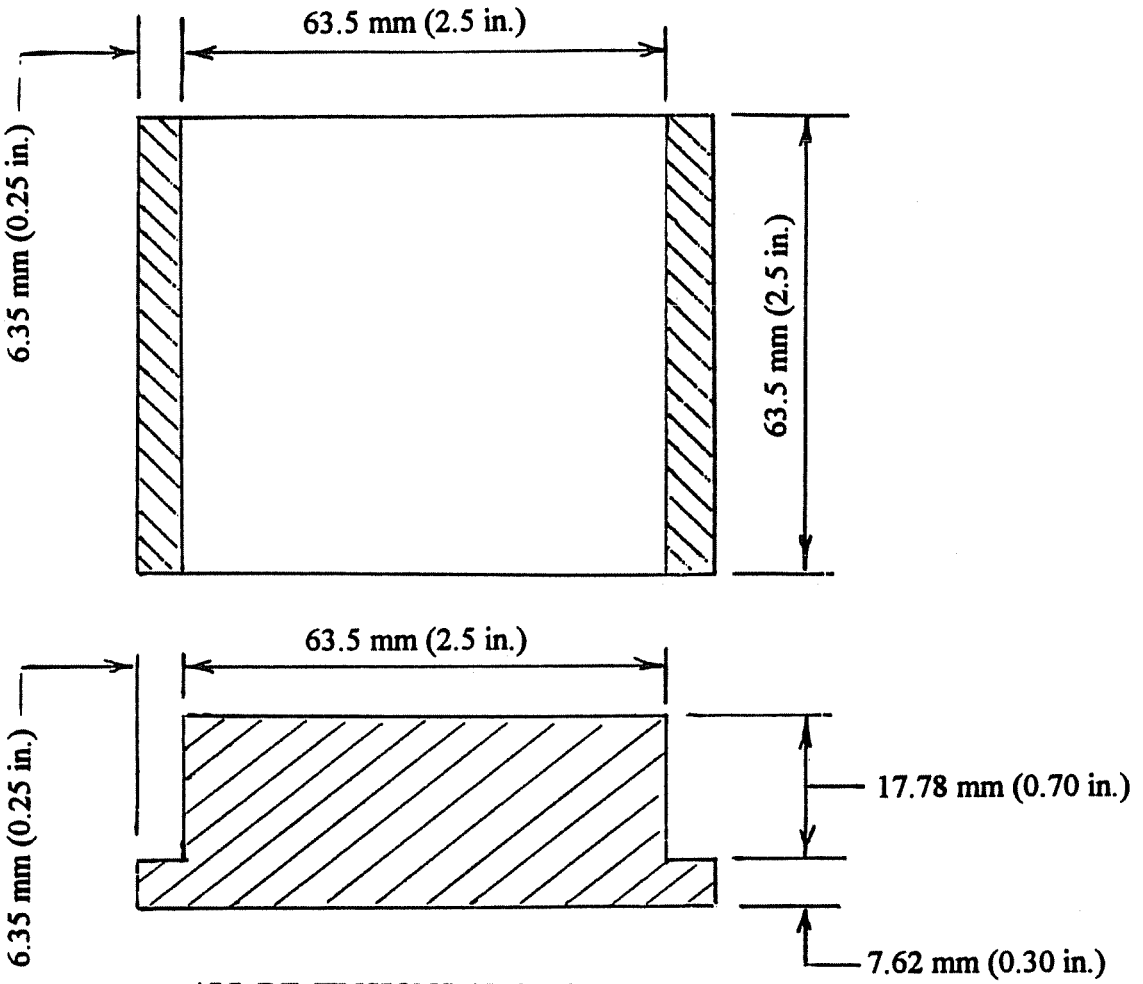

ALL DIMENSIONS ARE NOMINAL.

Baseplate and Loading Cylinder

FIGURE 1

REMOLDED SHEAR / SWELL / CONSOLIDATION WORKSHEET

Lab No.: 96-999 Date: 10-25-96

Proctor Maximum Dry Density: 1884 kg/m³ – lb./cu. ft.

Optimum Percent Moisture: 12.3

Maximum Dry Density at 95% or 97% (D): 1789 kg/m³ – lb./cu. ft.

Percent Optimum Moisture minus 3% (w_1): 9.3

Percent Hydroscopic Moisture Content (w): 1.9

Brass Ring Volume/Density Factor (F): 0.0754 (for density in kg/m³) or
1.2074 (for density in lb./cu. ft.)

W =	Weight of Dry Soil, grams	W = D x F	W = 134.9
W_1 =	Weight of Soil with Hydroscopic Moisture, grams	W_1 = W x (1.00 + w/100)	W_1 = 137.5
W_2 =	Weight of Soil andWater, grams	W_2 = W x (1.00 + w_1 /100)	W_2 = 147.4
w_2 =	Weight of Water Added/Required, grams	w_2 = W_2 - W_1	w_2 = 9.9

Test Operator Joe Dogood

EXAMPLE

FIGURE 2

REMOLDED SHEAR / SWELL / CONSOLIDATION WORKSHEET

Lab No.: 96-999 Date: 10-25-96

Proctor Maximum Dry Density: — kg/m^3 117.6 lb./cu. ft.

Optimum Percent Moisture: 12.3

Maximum Dry Density at 95% or 97% (D): — kg/m^3 111.7 lb./cu. ft.

Percent Optimum Moisture minus 3% (w_1): 9.3

Percent Hydroscopic Moisture Content (w): 1.9

Brass Ring Volume/Density Factor (F): 0.0754 (for density in kg/m^3) or 1.2074 (for density in lb./cu. ft.)

W = Weight of Dry Soil, grams	W = D x F	W = 134.9
W_1 = Weight of Soil with Hydroscopic Moisture, grams	W_1 = W x (1.00 + w/100)	W_1 = 137.5
W_2 = Weight of Soil andWater, grams	W_2 = W x (1.00 + w_1 /100)	W_2 = 147.4
w_2 = Weight of Water Added/Required, grams	w_2 = W_2 - W_1	w_2 = 9.9

Test Operator Joe Dogood

EXAMPLE

FIGURE 3

REMOLDED SHEAR / SWELL / CONSOLIDATION WORKSHEET

Lab No.: _____ Date: _____

Proctor Maximum Dry Density: _____ kg/m^3 _____ lb./cu. ft.

Optimum Percent Moisture: _____

Maximum Dry Density at 95% or 97% (D): _____ kg/m^3 _____ lb./cu. ft.

Percent Optimum Moisture minus 3% (w_1): _____

Percent Hydroscopic Moisture Content (w): _____

Brass Ring Volume/Density Factor (F): 0.0754 (for density in kg/m^3) or
1.2074 (for density in lb./cu. ft.)

W =	Weight of Dry Soil, grams	$W = D \times F$	W = _____
W_1 =	Weight of Soil with Hydroscopic Moisture, grams	$W_1 = W \times (1.00 + w/100)$	W_1 = _____
W_2 =	Weight of Soil andWater, grams	$W_2 = W \times (1.00 + w_1/100)$	W_2 = _____
w_2 =	Weight of Water Added/Required, grams	$w_2 = W_2 - W_1$	w_2 = _____

Test Operator _____

FIGURE 4

COMBINED COARSE AND FINE AGGREGATE SPECIFIC GRAVITY AND ABSORPTION

(An Arizona Method)

SCOPE

1. (a) This procedure describes the method which is used to determine the combined coarse and fine aggregate specific gravity and absorption when the specific gravity and absorption of the fine aggregate and the coarse aggregate are known. Arizona Test Method 210 describes the procedure for determining the coarse aggregate specific gravity and absorption. Arizona Test Method 211 describes the procedure for determining the fine aggregate specific gravity and absorption.

(b) See Appendix A1 of the Materials Testing Manual for information regarding the procedure to be used for rounding numbers to the required degree of accuracy.

CALCULATIONS

2. (a) Combined Bulk (Oven Dry), Bulk (SSD), or Apparent specific gravity is determined by the following:

$$\text{Combined Specific Gravity} = \frac{100}{\frac{Pc}{Gc} + \frac{Pf}{Gf}}$$

Where: Pc = Percent of Coarse Aggregate
Pf = Percent of Fine Aggregate
Pc + Pf = 100
Gc = Specific Gravity of Coarse Aggregate
Gf = Specific Gravity of Fine Aggregate

Example, for Combined Bulk (SSD) Specific Gravity, where:
Pc = 41
Pf = 59
Coarse Aggregate Bulk (SSD) Specific Gravity = 2.597
Fine Aggregate Bulk (SSD) Specific Gravity = 2.626

$$\text{Combined Bulk (SSD) Specific Gravity} = \frac{100}{\frac{41}{2.597} + \frac{59}{2.626}} = 2.614$$

(b) Combined absorption is determined by the following:

$$\text{Combined Absorption} = \frac{\begin{bmatrix}\text{Combined Bulk}\\ \text{(SSD) Specific}\\ \text{Gravity}\end{bmatrix} - \begin{bmatrix}\text{Combined Bulk}\\ \text{(Oven Dry) Specific}\\ \text{Gravity}\end{bmatrix}}{\begin{bmatrix}\text{Combined Bulk}\\ \text{(Oven Dry) Specific}\\ \text{Gravity}\end{bmatrix}} \times 100$$

Example: Combined Bulk (SSD) Specific Gravity = 2.614
Combined Bulk (Oven Dry) Specific Gravity = 2.576

$$\text{Combined Absorption} = \frac{(2.614) - (2.576)}{(2.576)} \times 100 = 1.48\%$$

REPORT

3. (a) Report combined Bulk (Oven Dry), Bulk (SSD), or Apparent specific gravity to the nearest 0.001, and indicate the type of specific gravity, whether Bulk (Oven Dry), Bulk (SSD), or Apparent.

(b) Report combined absorption to the nearest 0.01%.

December 15, 2006
(2 Pages)

SERIES 300

CONCRETE

The following test methods shall be performed in accordance with the respective designation:

ARIZONA TEST METHODS:

TITLE	DESIGNATION
Method of Adjusting Concrete Mixes for Variations in Moisture Content……	ARIZ 308a
Testing Impervious Materials and Compounds for Curing Concrete……	ARIZ 309a
Measuring Texture Depth of Portland Cement Concrete with Metal Tine Finish..……	ARIZ 310a
Method of Test for Flow of Grout Mixtures (Flow Cone Method)……..	ARIZ 311a
Compressive Strength of Cylindrical Concrete Specimens……..	ARIZ 314b
Precast Mortar Blocks Test……	ARIZ 315
Obtaining and Testing Drilled Cores and Sawed Beams of Concrete……...……	ARIZ 317a

AASHTO & ASTM TEST METHODS:

TITLE	DESIGNATION AASHTO	DESIGNATION ASTM
Making and Curing Concrete Test Specimens in the Field ……	T 23	
Flexural Strength of Concrete (Using Simple Beam with Third - Point Loading) …….....	T 97	

AASHTO & ASTM TEST METHODS: (continued)

TITLE	DESIGNATION AASHTO	DESIGNATION ASTM
Slump of Portland Cement Concrete	T 119	
Weight per Cubic Foot, Yield, and Air Content (Gravimetric) of Concrete	T 121	
Making and Curing Concrete Test Specimens in the Laboratory	T 126	
Air Content of Freshly Mixed Concrete by the Pressure Method	T 152	
Capping Cylindrical Concrete Specimens	T 231	
Temperature of Freshly Mixed Portland Cement Concrete		C 1064

NOTE: It shall be assured that the appropriate test methods as given in the project requirements are being adhered to.

METHOD OF ADJUSTING CONCRETE MIXES FOR VARIATION IN AGGREGATE MOISTURE CONTENT
(An Arizona Method)

Scope

1. This method is intended for determining the field batch weights for a concrete mix on a Saturated Surface-Dry, or an Oven Dried basis.

The objective is to correct the field mix design for the percentage of moisture in the aggregates, either on an SSD or OD basis.

Apparatus and Procedure

2. If oven dried basis is desired refer to paragraph (a). For S.S.D. basis, paragraphs (b) and (c) shall be adhered to.

(a) Use the apparatus and follow the procedure for determining the percent total moisture content and the percent surface moisture content of coarse and fine aggregate on a oven dried basis. (AASHTO T 255)

(b) Determine the percent surface moisture of the coarse aggregate on a S.S.D. basis as shown below:

1) Weigh and record the weight of a representative sample of wet coarse aggregate as sampled from the stockpile. The sample should weigh at least 1500 g.

2) Place the sample on a towel or absorbent cloth and dry by rubbing or rolling until the sample still appears damp but no sheen caused by reflected light from free water on the surface of the particles. This is the "saturated surface-dry" state.

3) Weigh and record the weight of the "Saturated Surface Dry" sample. Care shall be taken during the weighing operation to prevent loss of moisture by evaporation.

4) The calculations are as follows:

$$\%\ \text{Surface Moisture} = \frac{\text{Wet wt.} - \text{SSD wt.}}{\text{SSD wt.}} \times 100$$

Example:

Wet wt. = 2056 g.

SSD wt. = 2040 g.

$$\%\ \text{Surface Moisture} = \frac{2056 - 2040}{2040} \times 100 = 0.8\%$$

(c) Determine the percent surface moisture of the fine aggregate (sand) on a S.S.D. basis as shown below:

1) Fill a Chapman flask with water to the 200 ml. mark on the lower neck. The temperature of the water shall be from 65° F to 85° F.

2) Pour a moist sample weighing exactly 500 g. down the neck of the flask.

3) Agitate or roll so as to remove all air bubbles.

4) After all air bubbles have been removed, record the level of the liquid on the scale on the upper neck of the flask.

5) The percent surface moisture shall be calculated as follows:

$$M = \frac{V - \left(\frac{W_w}{\text{Sp. Gr.}}\right) - V_w}{W_w + V_w - V} \times 100$$

Where:

M = Percent Surface Moisture

V = Volume of combined water and sand, ml.

Sp. Gr. = Bulk Specific Gravity of Sand (S.S.D.)

W_w = Wet wt. of sand = 500 g.

V_w = Volume of water = 200 ml.

Example:

Volume of water and sand = 399 ml.

Specific Gravity of Sand = 2.653

$$M = \frac{399 - \left(\frac{500}{2.653}\right) - 200}{500 + 200 - 399} \times 100 = \frac{10.5}{301} = 3.5\%$$

NOTE: The specific gravity of sand from any one source usually may be considered as constant; however, periodic determinations should be made to verify this. The specific gravity reported with the mix design may be used in the calculation. If no specific gravity has been recorded it may be determined for the sample in accordance with AASHTO T-84, Specific Gravity and absorption of fine aggregate.

Calculations and Example (for Oven-dry Basis)

3. The following serves to illustrate adjustments on an oven-dried (OD) basis:

(a) Moisture contents as determined in 2(a) on an oven dried basis:

Total: Sand = 5.9% water

Coarse = 3.0% water

Surface: Sand = 4.9% water

Coarse = 1.0% water

Asportion: Sand = 1.0%

Coarse = 2.0%

(b) Mix Design (Oven dry basis):

Cement = 94 lb. (one sack)

Sand = 203 lb.

Coarse = 301 lb.

Water = 7.6 gal. (@ 8.33 lb/gal) = 63 lbs.

(c) Batch weight adjustment:

Cement = 94 lb. (unchanged)

$$\text{Sand} = \frac{(\text{O.D. wt.})\ (100 + \%\ \text{total water})}{100}$$

$$= \frac{(203)\ (105.9)}{100} = 215\ \text{lb.}$$

$$\text{Coarse} = \frac{(\text{O.D. wt.})\ (100 + \%\ \text{total water})}{100}$$

$$= \frac{(301)\ (103.0)}{100} = 310\ \text{lb.}$$

$$\text{Surface moisture in sand} = \frac{(\%\ \text{surface water})\ (\text{O.D. wt.})}{100}$$

$$= \frac{(4.9)\ (203)}{100} = 10\ \text{lb.}$$

$$\text{Surface moisture in coarse} = \frac{(\%\ \text{surface water})\ (\text{O.D. wt.})}{100}$$

$$= \frac{(1.0)\ (303)}{100} = 3\ \text{lb.}$$

Total surface moisture = 10 + 3 = 13 lb.

$$\text{Gallons of surface moisture} = \frac{13\ \text{lb.}}{8.33\ \text{lb.}\ \text{gal.}} = 1.6\ \text{gals.}$$

Mix water required = 7.6 — 1.6 = 6.0 gals.

(d) Adjusted batch weights:

Cement = 94 lb.

Sand = 215 lb.

Coarse = 310 lb.

Water = 6.0 gals. (@8.33 lbs/gal) = 50 lbs.

Calculations and Example (for S.S.D. basis)

4. The following serves to illustrate adjustments, on a SSD basis:

(a) Percent surface moisture as determined in 2(b) and (c) on a SSD basis:

Sand = 3.5% water

Coarse = 0.8% water

(b) Mix Design (Saturated Surface-Dry basis):

Cement = 94 lb. (1 sack)

Sand = 205 lb.

Coarse = 307 lb.

Water = 6.5 gal. (@ 8.33 lb/gal) = 54 lbs.

(c) Batch weight adjustment:

Cement = 94 lb. (unchanged)

$$\text{Sand} = \frac{(\text{SSD wt.})\ (100 + \%\ \text{water})}{100}$$

$$= \frac{(205)\ (103.5)}{100} = 212\ \text{lb.}$$

$$\text{Coarse} = \frac{(\text{SSD wt.})\ (100 + \%\ \text{water})}{100}$$

$$= \frac{(307)\ (100.8)}{100} = 309\ \text{lb.}$$

Surface moisture in sand = 212 — 205 = 7 lb.

Surface moisture in coarse = 309 — 307 = 2 lb.

Total Surface Moisture = 7 + 2 = 9 lb.

$$\text{Gallons of surface moisture} = \frac{9\ \text{lb.}}{8.33\ \text{lb.}\ \text{gal.}} = 1.1\ \text{gal.}$$

Gallons of mixing water required = 6.5 — 1.1
= 5.4 gal.

(d) Adjusted batch weights:

Cement = 94 lb. (unchanged)

Sand = 212 lb.

Coarse = 309 lb.

Water = 5.4 gal. (@ 8.33 lb./gal/) = 45 lbs.

Report

5. Report adjusted batch weights to the nearest 1 lb., and water content to the nearest 0.1 gal.

TESTING IMPERVIOUS MATERIALS & COMPOUNDS FOR CURING CONCRETE

(A Modification of AASHO Designation T 155)

REFEREE TEST

Scope

1. This method is intended for use in determining the efficiency of liquid membrane-forming compounds for curing concrete, as measured by their ability to prevent loss of moisture during the early hardening period.

Apparatus

2. The apparatus shall consist of the following:

(a) Molds. – Molds shall be made of metal, glass, hard rubber, or plastic and shall be watertight, of such construction that distortion is prevented. Interior dimensions shall be: 6 x 12 in. at the top, 5¾ x 11¾ in. at the bottom, within ±¼ in., and 2 ±⅛ in. depth. A flat rim is required at the top and on all sides and shall be ¼ in. in width.

(b) Curing Cabinet. – A cabinet capable of a temperature of 100° ±2° F and relative humidity of 32 ±2%.

Specific Gravity Determination

3. (a) Fill a specific gravity flask with a well-stirred sample of curing compound.

(b) Gently lower a selected hydrometer into the compound, taking care the hydrometer does not touch the sides of the flask. If the trial hydrometer comes to rest and floats too high, a hydrometer of greater specific gravity is necessary; if the hydrometer sinks below the scale, a lighter hydrometer is required. Continue to change hydrometers until one is found which comes to rest on the scale.

(c) Allow the hydrometer to settle to a constant level. (For clear, wax and varnish compounds, this occurs in a very few minutes; but the heavy-pigmented types may require an hour or more). Read and record the specific gravity of the compound.

(d) From Table I which follows, find the quantity in grams of compound to use for the test. For unusual compounds which do not occur on the chart, consult the supervisor.

NOTE: *The amount of compound is calculated to represent 150 sq. ft. per gallon coverage. For clear type compounds this works out to 10.0 ml. per sample, but other types, and especially the pigmented types, may require more.*

NOTE: *To find the required grams of compound for any specific gravity values not listed on Table I, proceed as follows:*

1. *Determine specific gravity.*
2. *Obtain the specific gravity in the New and Revised Tag Manual for Inspectors of Petroleum and obtain the corresponding POUNDS PER GALLON.*
3. *Multiply POUNDS PER GALLON by factor 1.4385 to find the weight in grams of compound required to cover the specimen.*

Proportioning and Mixing Mortar

4. (a) Proportioning. – The proportions of cement and sand shall be determined by adding dry sand to a cement paste having a water-cement ratio of 0.40 by weight, to produce a flow of 35 ±5. The flow test shall be made as described in the Standard Method of Test for measuring Mortar-Making Properties of Fine Aggregate (AASHO Designation: T 71).

(b) Mixing. – The mortar shall be mixed at room temperature, preferably 73.4° ±3° F (23° ±1.7° C) if possible, and at a relative humidity of 40 to 60 percent. The temperature of the mortar at the time of molding shall be 73.4° ±3° F (23° ±1.7° C). The cement and water shall be placed in a nonabsorbent vessel and the cement permitted to absorb water for 1 minute. These materials shall then be mixed with a spoon into a smooth paste. The sand shall be added to the paste and final mixing shall be accomplished by continuous kneading and squeezing with the hands for 2 min. Rubber gloves shall be worn during the mixing operation. A suitable mortar-mixing machine may be used in lieu of hand mixing.

(c) Three specimens shall be molded for testing with a given curing compound.

(d) The mix used to determine the portion of sand to cement to produce the specified consistency shall be discarded and shall not be used for making test specimens.

Molding Specimens

4. (a) Coat the insides of the molds with a very thin coating of a light lubricating oil.

(b) Place a layer of mortar approximately 1 inch thick in the mold, and tamp 50 times with a wooden rod 1-in. square. Fill the mold with mortar and again tamp 50 times.

TABLE 1
GRAVITY CHART
For Use in Testing Curing Compounds

Range in Gravity	Grams of Compound	Range in Gravity	Grams of Compound
0.664 – 0.671	8.0	0.873 – 0.881	10.5
0.672 – 0.681	8.1	0.882 – 0.889	10.6
0.682 – 0.689	8.2	0.890 – 0.897	10.7
0.690 – 0.697	8.3	0.898 – 0.906	10.8
0.698 – 0.706	8.4	0.907 – 0.914	10.9
0.707 – 0.714	8.5	0.915 – 0.922	11.0
0.715 – 0.723	8.6	0.923 – 0.930	11.1
0.724 – 0.731	8.7	0.931 – 0.939	11.2
0.732 – 0.739	8.8	0.940 – 0.947	11.3
0.740 – 0.748	8.9	0.948 – 0.955	11.4
0.749 – 0.756	9.0	0.956 – 0.964	11.5
0.757 – 0.764	9.1	0.965 – 0.972	11.6
0.765 – 0.772	9.2	0.973 – 0.980	11.7
0.773 – 0.781	9.3	0.981 – 0.989	11.8
0.782 – 0.789	9.4	0.990 – 0.997	11.9
0.790 – 0.797	9.5	0.998 – 1.006	12.0
0.798 – 0.806	9.6	1.007 – 1.013	12.1
0.807 – 0.814	9.7	1.014 – 1.022	12.2
0.815 – 0.822	9.8	1.023 – 1.030	12.3
0.823 – 0.831	9.9	1.031 – 1.038	12.4
0.832 – 0.839	10.0	1.039 – 1.047	12.5
0.840 – 0.847	10.1	1.048 – 1.055	12.6
0.848 – 0.856	10.2	1.056 – 1.064	12.7
0.857 – 0.864	10.3	1.065 – 1.072	12.8
0.865 – 0.872	10.4	1.073 – 1.076+	12.9

(c) Immediately after completing the tamping, strike off the specimen level with the top of the mold, with a sawing motion of a wooden screed having a flat surface 1-inch in width. One pass only shall be made in the direction of the long axis of the mold.

Storage of Specimens

5. (a) Immediately after molding, weigh each full mold to the nearest 1 g. and place in the curing cabinet. Specimens shall be arranged so as to provide a clear space on all sides of from 2 to 7 inches.

NOTE: *The movement of conditioned air within the cabinet shall be such that the solvent from curing compounds will readily evaporate. During the first day of drying, sufficient fresh air shall be admitted into the cabinet to eliminate solvent vapors.*

Application of Curing Materials

7. (a) After approximately 1½ hours, check the specimens for surface water. If surface water is evident, leave the specimens in the cabinet until all surface water has disappeared. Then lightly brush the surface of the specimens with a stiff bristle brush. If surface water appears upon brushing, return the specimen to the curing cabinet. Remove the specimen immediately upon disappearance of the surface water brought to the surface, and brush again. Repeat the process until no surface water appears when the specimen is brushed.

(b) When the proper surface condition has been attained, form a V-shaped groove approximately ⅛ in. deep and not more than 1/16 in. wide between the edge of the mortar and the mold, extending all around the specimen. Fill the groove with a sealing compound that will not be affected by the curing material under test. This compound shall not extend more than ¼ in. from the mold onto the surface of the specimen.

(c) Weigh the specimen to the nearest 1 g. Then with a spray gun (for clear compounds), or with a soft-bristle brush 1 in. in width or a pipette (for pigmented compounds) apply the amount of curing compound determined from Section 3. Take care that the entire surface of the specimen is coated uniformly. Record the weight to the nearest 1 g. Place the specimen in the curing cabinet.

(d) After 3 hours, remove the specimens from the cabinet and weigh to the nearest 1 g. An unusually heavy loss in weight indicates a leaking mold or faulty seal. In such a case, the specimen shall be discarded. Return the specimens to the curing cabinet without delay.

Duration of Curing

8. The specimens shall be cured for 72 hours with occasional daily checks, and the amount of water lost shall be determined by weighing the specimen.

Corrections for Loss in Weight of Liquid Curing Materials During Test

9. (a) Take an identical quantity of curing compound and spread evenly over a clean, dry, tared metal pan approximately 6 in. x 12 in. x ⅛ in.

(b) Place the pan in the curing cabinet and dry it to constant weight. Reweigh to the nearest 0.1 g. Record the loss in weight of the curing compound as volatile matter.

Calculations

10. (a) Calculate the loss of water and volatiles in the specimen and curing compound by the following:

$$W = S - S_c$$

Where:

W = combined loss of water and volatile g.
S = original weight of mold and specimen, with curing compound, g.
S_c = weight of cured specimen, plus mold, plus curing compound, g.

(b) Calculate the net loss of water from the specimen by the following:

$$L = W - W_v$$

Where:

L = The net loss of water from specimen, g.
W_v = weight of volatile matter, as determined in section 9.(b), g.

(c) Measure the width of the mold in cm. in three areas and use the average with the length to acquire the surface area (A) of the mold.

(d) Calculate the weight of water lost per sq. cm. of surface area by the following:

$$W_u = L/A$$

Where:

W_u = weight of water lost per sq. cm. of area, g./cm.^{2}
A = surface area of mold (cm.^{2})

Example

11. The following shall serve to illustrate calculations:

Orig. wt., Mold + Sample + Compound (S)	= 5502 g.
Cured wt. of above (S_c)	= 5490 g.
Loss of water + Volatile (W)	= 12 g.
Volatile in 10 g. Curing Compound (W_v)	= 7.2 g.
Net loss of water (L)	= 4.8 g.
Avg. width of mold	= 14.08 cm.
Avg. length of mold	= 29.50 cm.
Surface Area of mold (A)	= 415.4 cm.^{2}

$$\text{Unit loss of water } (W_u) = \frac{L}{A} = \frac{4.8}{415.4} = 0.012 \text{ g./cm.}^2$$

Report

12. Report the following:

(a) Original weight of mold and specimen with curing compound, to nearest 1 g.

(b) Weight of mold, specimen and compound after curing, to nearest 1 g.

(c) Weight of loss of volatiles, to nearest 0.1 g.

(d) Loss of water and volatiles in cured specimen to the nearest 0.1 g.

(e) Net weight of water lost to the nearest 0.1 g.

(f) Average width of mold, to nearest 0.01 cm.

(g) Length of mold to nearest 0.01 cm.

(h) Surface area of mold, to nearest 1 sq. cm.

(i) Unit loss of water, to nearest 0.001 g. per sq. cm.

ALTERNATE METHOD

Scope

1. This method is a procedure for the determination of the non-volatile residue of curing compounds. It is applicable for all types of membrane-forming curing compounds. The percent residue is used in determining the moisture retention efficiency of the curing compound.

Apparatus

2. Apparatus shall consist of the following:

(a) Balance, accurate to 0.1 gram.

(b) Hot Plate, with a minimum of 3 heat variations.

(c) Ointment Tins, 6 oz.

Procedure

3. (a) Thoroughly stir the sample until it is completely free of lumps. Place 5 to 10 g. (weighed to the nearest 0.1 gram) into each of three 6 ounce ointment tins. Place the samples on a medium temperature hot plate (300° to 400° F) and heat until the volatile fraction is completely evaporated. This point can be determined when the formation of bubbles ceases and the residue starts to darken in color.

(b) Remove the cans from the hot plate and allow to cool to room temperature. Weigh each can to the nearest 0.1 gram and average the residue weights for the 3 cans.

Calculation

4. Using the average weight, calculate the percent non-volatiles with the following formula:

$$\text{Percent} = \frac{B}{A} \times 100$$

Where:

A = Weight of compound before heating.

B = Weight of residue.

Report

5. Report the result to the nearest 0.1 gram.

Notes

(1) *Pigmented compounds should be allowed to settle until the clear liquid can be decanted. The clear liquid is then tested as above.*

(2) *Emulsion types should be heated slowly to avoid spattering.*

MEASURING TEXTURE DEPTH OF PORTLAND CEMENT CONCRETE WITH METAL TINE FINISH

[A Modification of Louisiana Dept. of Hwys. Designation TR 229]

SCOPE

1. This method describes the procedure for measuring texture depth of fresh or hardened concrete finished with a metal tine.

APPARATUS

2. (a) A tire tread depth measuring gauge with 1/32 of an inch gradations similar to the one shown in Figure 1, or a similar device approved by the Engineer.

(b) Wire brush.

(c) Steel straightedge approximately 1/4" x 1" x 12".

PROCEDURE

3. (a) The depth of texture shall be measured from the original concrete surface. Any projections above the original surface shall be removed by wire brushing or with the steel straightedge prior to taking a measurement on hardened concrete. If measurements are being made on fresh concrete, the depth gauge shall be pressed down until substantially at the level of the original concrete surface. If measurements are being made on hardened concrete such that the depth gauge cannot be pressed down until substantially of the level of the original concrete surface, due to surface irregularities caused by the texturing operation, the height of these surface irregularities shall be measured and subtracted from the measured depth of texture.

(b) With the depth gauge guides in contact with the original concrete surface, the plunger is depressed until contact is made with the bottom of the groove in the concrete. The gauge is then removed from the surface with care being taken to prevent the plunger from being disturbed. The texture depth is then read to the nearest 1/32 of an inch on the calibrated plunger.

(c) The plunger is then re-zeroed and the procedure is repeated until the necessary measurements are completed.

(d) Sufficient measurements shall be taken at random locations along and across the paving width to ensure that the specification requirements are met. In most cases, one test per 12 foot width per 500 foot length should be sufficient. The results should be noted in the inspectors daily diary.

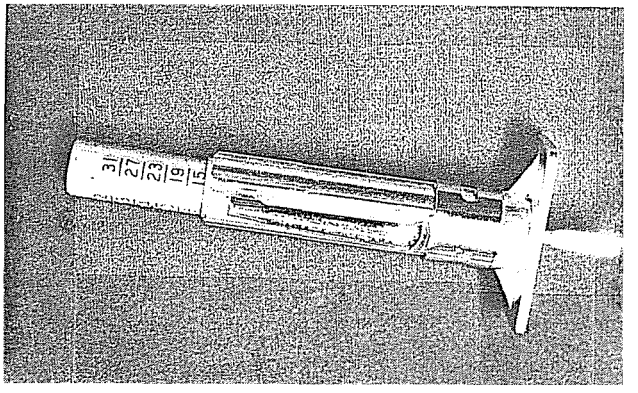

FIGURE 1

METHOD OF TEST FOR FLOW OF GROUT MIXTURES (FLOW CONE METHOD)

(A Modification of California Test Method 541)

SCOPE

1. (a) This method is intended to be used for determining the flow of grout mixtures as described in this test method.

(b) This test method may involve hazardous material, operations, or equipment. This test method does not purport to address all of the safety concerns associated with its use. It is the responsibility of the user to consult and establish appropriate safety and health practices and determine the applicability of any regulatory limitations prior to use.

(c) See Appendix A1 of the Materials Testing Manual for information regarding the procedure to be used for rounding numbers to the required degree of accuracy.

(d) Metric (SI) units and values are shown in this test method with English units and values following in parentheses. Values given for metric and English units may be numerically equivalent (soft converted) for the associated units, or they may be given as rounded or rationalized values (hard converted). Either the metric or English units along with their corresponding values shall be used in accordance with applicable specifications. See Appendix A2 of the Materials Testing Manual for additional information on the metric system.

APPARATUS

2. Requirements for the frequency of equipment calibration and verification are found in Appendix A3 of the Materials Testing Manual. Apparatus for this test procedure shall consist of the following:

(a) Flow cone conforming to the dimensions indicated in Figure 1.

(b) Stop watch accurate to 0.1 second.

(c) Rubber stoppers.

(d) Sample container of four liter minimum capacity [a 152.4 mm x 304.8 mm (6 inch x 12 inch) concrete cylinder mold is adequate].

(e) Supporting ring for flow cone and stand [a 19 liter (5 gallon) bucket may be used], see figure 2.

SAMPLE

3. A representative sample shall be approximately 4 liters of grout.

PRECAUTIONS

4. (a) This test must be performed at a location that is free from vibration.

(b) The cone must be kept clean from cement build-up, especially in or near the orifice and nozzle.

PROCEDURE

5. (a) Determination of Efflux Time

1) Dampen flow cone and allow any excess water to drain. Place the cone in the supporting ring and insert the rubber stopper.

2) Level the cone, then pour the grout from the sample container into the cone until the grout Surface is level with the bottom of the holes in the side of the cone.

3) Remove the stopper and start the stopwatch simultaneously.

4) Stop the stopwatch at the first break or change in the continuous flow of grout from the discharge tube.

5) Dispose of the tested grout sample; rinse the equipment.

(b) Determination of Efflux After Quiescence

1) Fill cone with grout as previously described, using the remainder of the 4 liter sample.

2) Allow grout to rest in cone for 20 minutes ± 15 seconds from the instant the cone is filled. After the 20 minute quiescent period, remove the stopper and determine efflux time as described above.

EXAMPLE

6. Quiescent time (T_Q) is the amount of time that a sample of grout remains undisturbed (quiescent) in the flow cone and is expressed in minutes. Efflux time (T_E) is the amount of time that a sample of grout requires to run out of the flow cone after the plug is removed, expressed in seconds.

(a) Efflux time at the pump discharge:

$$T_E \geq 11 \text{ seconds (when } T_Q = 0 \text{ minutes)}$$

(b) Efflux time of grout sample at T_Q = 20 minutes:

$$T_E \text{ (at } T_Q = 20) \geq T_E \text{ (at } T_Q = 0) + 3 \text{ seconds,}$$

and

$$T_E \text{ (at } T_Q = 20) \leq T_E \text{ (at } T_Q = 0) + 8 \text{ seconds}$$

NOTE: The above mathematical expressions for quiescent time of 20 minutes are expressed as follows: "The efflux time after 20 minutes must be at least 3 seconds greater than the initial efflux time (Quiescent Time = Zero) and not more than 8 seconds greater than the initial efflux time."

REPORT

7. Report the efflux time to the nearest 0.1 seconds for both T_Q=0 and T_Q=20.

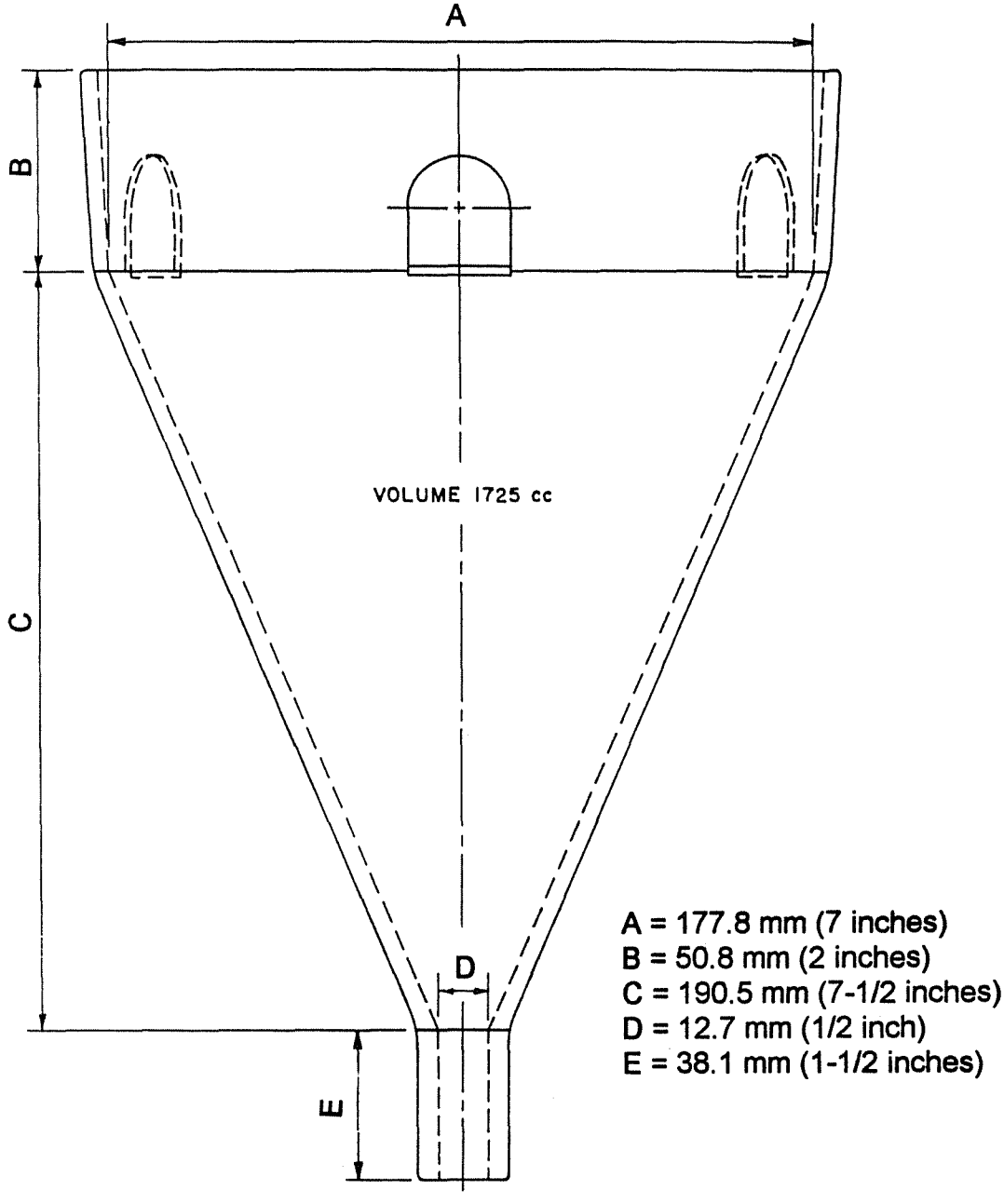

Grout Flow Cone

FIGURE 1

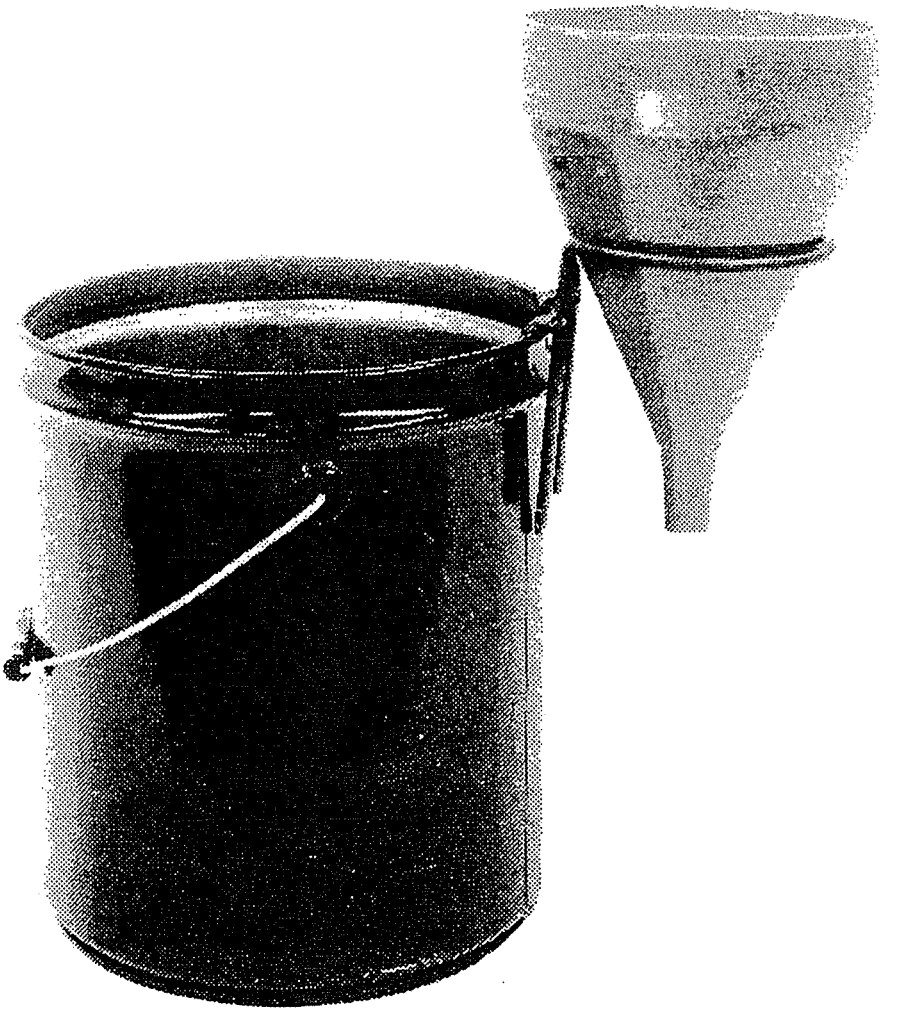

Grout Flow Test Apparatus

FIGURE 2

COMPRESSIVE STRENGTH OF CYLINDRICAL CONCRETE SPECIMENS

(A Modification of AASHTO Designation T 22)

1. This test procedure is the same as specified in AASHTO T 22, with the following exceptions:

(a) Section 6.2 of AASHTO T 22 is revised to read:

6.2 Neither end of compressive test specimens when tested shall depart from perpendicularity to the axis by more than 0.5° [approximately equivalent to 1/32 inch (1 mm) in 4 inches (100 mm)]. The ends of compressive test specimens that are not plane within 0.002 inch (0.050 mm) shall be capped, sawed, or ground in accordance with AASHTO T 231; or if the ends meet the requirements of ASTM C 1231, unbonded caps (neoprene or other qualified elastomeric materials) with metal retainers may be used instead of capping. When used for acceptance testing of concrete, unbonded caps are only allowed for compressive strengths specified in ASTM C 1231. Each test specimen shall be measured to determine its diameter. The diameter shall be the average of two measurements, taken using a caliper, at right angles to each other at about mid-height of the specimen. The individual diameter measurements shall be determined to the nearest 0.01 inch (0.25 mm). Determine and record the average of the two diameter measurements to the nearest 0.01 inch (0.25 mm). That value shall be the diameter used to calculate the cross-sectional area of the test specimen.

(b) Section 7.6 of AASHTO T 22 is revised to read:

7.6 Apply the load until the specimen fails, and record the maximum load carried by the specimen during the test. If desired, the load may be applied until the specimen breaks such that the type of fracture can be determined.

(c) Section 8.1 of AASHTO T 22 is revised to read:

8.1 Calculate the compressive strength of the specimen by dividing the maximum load carried by the specimen during the test by the average cross-sectional area determined in Section 6, and express the result to the nearest 10 psi (50 kPa).

(d) Section 9.1.5 of AASHTO T 22 is revised to read:

9.1.5 Compressive strength of specimen, calculated to the nearest 10 psi (50 kPa). In addition, if the average compressive strength is determined for multiple specimens, average compressive strength to the nearest 10 psi (50 kPa);

(e) Section 9.1.6 of AASHTO T 22 is revised to read:

9.1.6 Type of fracture, if desired (see Figures 2, 5, or 7);

(f) APPENDIX A of AASHTO T 22 – "Compressive Strength of Cylindrical Concrete Specimens Using Neoprene Caps", is replaced in its entirety by ASTM C 1231 – "Standard Practice for Use of Unbonded Caps in Determination of Compressive Strength of Hardened Concrete Cylinders".

2. In addition to the exceptions to AASHTO T 22 given in paragraphs (a) and (f) above, the following revisions to ASTM C 1231 shall also apply:

(a) References to ASTM C 31 in ASTM C 1231 shall be replaced with AASHTO T 23.

(b) References to ASTM C 39 in ASTM C 1231 shall be replaced with AASHTO T 22.

(c) References to ASTM C 192 in ASTM C 1231 shall be replaced with AASHTO T 126.

(d) References to ASTM C 617 in ASTM C 1231 shall be replaced with AASHTO T 231.

3. A blank ADOT "Concrete Test Report" laboratory card is provided in Figure 4 (front of card) and Figure 5 (back of card). An example of the use of the ADOT "Concrete Test Report" laboratory card is given in Figures 6 and 7.

ARIZONA DEPARTMENT OF TRANSPORTATION

CONCRETE TEST REPORT

USE CAPITAL LETTERS

WHITE
YELLOW
BLUE

CLASS | CORE OR CYLINDER NUMBER * | CORE OR CYLINDER NUMBER * | DATE BATCHED (MONTH, DAY, YEAR) | TICKET NUMBER | TRUCK OR BATCH QUANTITY (CY) | PRODUCT CODE

* ENTER CORE OR CYLINDER NUMBERS AT THE SITE

PLANT OF ORIGIN OR PIT

PROJECT AND TRACS NUMBER

REQUIRED 28-DAY STRENGTH (PSI)

AT PLANT (AT SITE WHEN NO PLANT INSPECTOR)

	DESIGN WT (S.S.D.) LB/CY	MOISTURE ± (S.S.D.) LB/CY	BATCH WEIGHTS LB/CY
CEMENT			
SAND			
C.A. #1			
C.A. #2			
WATER			

FLY ASH LB/CY

	TYPE	AMOUNT	
ADMIX			OZ./CY OR OZ./CWT
ADMIX			OZ./CY OR OZ./CWT
ADMIX			OZ./CY OR OZ./CWT
A.E.A.			OZ./CY OR OZ./CWT

PLANT INSPECTOR'S SIGNATURE

BATCH TIME (MILITARY TIME)

Max. mlg. rated mix speed		rpm
Min. mlg. rated mix speed		rpm
Actual mix. speed		rpm
Time mixed		min
No. of rev.		

AT SITE

DATE SAMPLED (MONTH, DAY, YEAR) | SAMPLED BY

QTY INSTRUCT REP BY TEST (CY) | WATER ADDED GAL./CY

SAMPLE TIME (MILITARY TIME)

DIR | STATION + | PLACED IN - PART OF STRUCTURE | STRUCT. NO

ENTRAINED AIR SPEC	TO		%
ENTRAINED AIR CONTENT			%
SLUMP SPEC	TO		IN.
MEASURED SLUMP			IN.

IF NO BATCH WEIGHTS, THERE IS NO FINAL W/C RATIO

FINAL W/C RATIO		LB/LB
MAX W/C RATIO		LB/LB

CONCRETE TEMP		°F
AIR TEMP		°F

FIELD INSPECTOR'S SIGNATURE

Additional Mix time	
Time mixed at plant	
Total time mixed plant and site	
Mix rev. at Plant	
Mix rev. at site	
Total No. of Mix Rev. at Plant & Site	

AT LAB

LAB NUMBER

DATE REC'D IN LAB	/	
TIME REC'D IN LAB	:	MILITARY TIME
DATE TESTED	/	
TIME TESTED	:	MILITARY TIME

LENGTH/ HEIGHT	DIAMETER	CROSS-SECTIONAL AREA	LOAD	STRENGTH
IN.	IN.	SQ. IN.	LB.	PSI
IN.	IN.	SQ. IN.	LB.	PSI
IN.	IN.	SQ. IN.	LB.	PSI
			AVERAGE**	PSI

REQUIRED STRENGTH (PSI) | AGE (H = HOURS, D = DAYS)

AT LAB

LAB NUMBER

DATE REC'D IN LAB	/	
TIME REC'D IN LAB	:	MILITARY TIME
DATE TESTED	/	
TIME TESTED	:	MILITARY TIME

LENGTH/ HEIGHT	DIAMETER	CROSS-SECTIONAL AREA	LOAD	STRENGTH
IN.	IN.	SQ. IN.	LB.	PSI
IN.	IN.	SQ. IN.	LB.	PSI
IN.	IN.	SQ. IN.	LB.	PSI
			AVERAGE**	PSI

REQUIRED STRENGTH (PSI) | AGE (H = HOURS, D = DAYS)

LAB | LAB CODES: P = PROJECT, R = REGIONAL, C = CENTRAL

**OR REPORTED RESULT AS REQUIRED BY SPECIFICATIONS

REMARKS

LABMAN SIGNATURE AND DATE

LABMAN SIGNATURE AND DATE

SUPERVISOR SIGNATURE AND DATE

TEST METHOD

SAMPLING	T 141
FABRICATION AND CURING	T 23 or T126
AIR CONTENT	T 152
SLUMP	T 119
CONCRETE TEMP	C 1064
LENGTH/HEIGHT OF CORES	T 148
COMPRESSIVE STRENGTH	ARIZ 314

T = AASHTO TEST
C = ASTM TEST

ADOT 44-9337 R03/05

SEE BACK ALSO

FIGURE 4

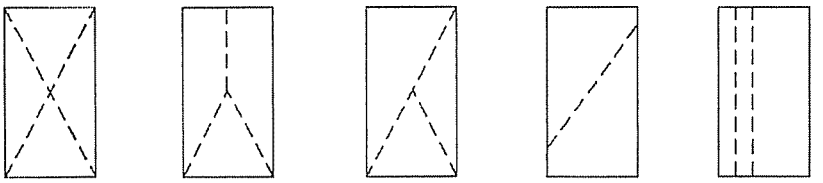

AGE: _____

SPECIMEN IDENTIFICATION	INDICATE TYPE OF FRACTURE (✓)				
	CONE	CONE & SPLIT	CONE & SHEAR	SHEAR	COLUMNAR

AGE: _____

SPECIMEN IDENTIFICATION	INDICATE TYPE OF FRACTURE (✓)				
	CONE	CONE & SPLIT	CONE & SHEAR	SHEAR	COLUMNAR

ADOT 44-9337 R03/05 (Back)

FIGURE 5

ARIZONA DEPARTMENT OF TRANSPORTATION

USE CAPITAL LETTERS

CONCRETE TEST REPORT

WHITE ☒ YELLOW ☐ BLUE ☐

CLASS	CORE OR CYLINDER NUMBER *	CORE OR CYLINDER NUMBER *	DATE BATCHED (MONTH DAY YEAR)	TICKET NUMBER	TRUCK OR BATCH QUANTITY	PRODUCT CODE
P	20		03 07 05	275	10 CY	140700

* ENTER CORE OR CYLINDER NUMBERS AT THE SITE

PLANT OF ORIGIN OR PIT: ABC CONCRETE

PROJECT AND TRACS NUMBER: STP-999-C(999)B H999901C

REQUIRED 28-DAY STRENGTH: 4000 PSI

AT PLANT (AT SITE WHEN NO PLANT INSPECTOR)

BATCH TIME: 11:44 MILITARY TIME

	DESIGN WT (S.S.D.) LB/CY	MOISTURE ± (S.S.D.) LB/CY	BATCH WEIGHTS LB/CY
CEMENT			
SAND			
C.A. #1			
C.A. #2			
WATER			

FLY ASH LB/CY

	TYPE	AMOUNT	
ADMIX			OZ/CY OR OZ/CWT
ADMIX			OZ/CY OR OZ/CWT
ADMIX			OZ/CY OR OZ/CWT
A.E.A.			OZ/CY OR OZ/CWT

Max. mfg. rated mix speed	rpm
Min. mfg. rated mix speed	rpm
Actual mix. speed	rpm
Time mixed	min
No. of rev.	

PLANT INSPECTOR'S SIGNATURE

EXAMPLE

AT SITE

DATE SAMPLED (MONTH DAY YEAR)	SAMPLED BY	QTY IN STRUCT REP BY TEST	SAMPLE TIME
03 07 05	JOE SAMPLER	207 CY	12:05 MILITARY TIME

WATER ADDED GAL/CY: 2

DIR	STATION	PLACED IN - PART OF STRUCTURE	STRUCT. NO
NB	22 + 25	MAIN ROAD - Lt. of ℄	

Additional Mix time	2
Time mixed at plant	
Total time mixed plant and site	
Mix rev. at Plant	
Mix rev. at site	20
Total No. of Mix Rev. at Plant & Site	

ENTRAINED AIR SPEC	TO	%
ENTRAINED AIR CONTENT		%
SLUMP SPEC	000 TO 450	IN.
MEASURED SLUMP	275	IN.

IF NO BATCH WEIGHTS, THERE IS NO FINAL W/C RATIO

FINAL W/C RATIO		LB/LB
MAX W/C RATIO		LB/LB

CONCRETE TEMP	66	°F
AIR TEMP	60	°F

FIELD INSPECTOR'S SIGNATURE: PAUL INSPECTOR

AT LAB

LAB NUMBER	165
DATE REC'D IN LAB	03/08
TIME REC'D IN LAB	13:25 MILITARY TIME
DATE TESTED	04/04
TIME TESTED	05:49 MILITARY TIME

LENGTH/HEIGHT	DIAMETER	CROSS-SECTIONAL AREA	LOAD	STRENGTH
120 IN.	601 IN.	2837 SQ. IN.	124190 LB.	4380 PSI
120 IN.	600 IN.	2827 SQ. IN.	119630 LB.	4230 PSI
120 IN.	601 IN.	2837 SQ. IN.	141670 LB.	~~4990~~ PSI
				AVERAGE** 4310 PSI

REQUIRED STRENGTH: 4000 PSI

AGE: 28 D (H = HOURS, D = DAYS)

AT LAB

LAB NUMBER	
DATE REC'D IN LAB	/
TIME REC'D IN LAB	: MILITARY TIME
DATE TESTED	/
TIME TESTED	: MILITARY TIME

LENGTH/HEIGHT	DIAMETER	CROSS-SECTIONAL AREA	LOAD	STRENGTH
IN.	IN.	SQ. IN.	LB.	PSI
IN.	IN.	SQ. IN.	LB.	PSI
IN.	IN.	SQ. IN.	LB.	PSI
				AVERAGE** PSI

REQUIRED STRENGTH: PSI

AGE: H = HOURS, D = DAYS

LAB: P — LAB CODES: P = PROJECT, R = REGIONAL, C = CENTRAL

**OR REPORTED RESULT AS REQUIRED BY SPECIFICATIONS

REMARKS: COMPRESSIVE STRENGTH OF CYLINDER 165C ELIMINATED - DIFFERS BY MORE THAN 10% FROM THE AVERAGE OF THE THREE CYLINDERS.

LABMAN SIGNATURE AND DATE: ED LABMAN 04/04/05

LABMAN SIGNATURE AND DATE:

SUPERVISOR SIGNATURE AND DATE: KIM SUPERVISOR 04/04/05

TEST METHOD

SAMPLING	T 141
FABRICATION AND CURING	T 23 or T 126
AIR CONTENT	T 152
SLUMP	T 119
CONCRETE TEMP	C 1064
LENGTH/HEIGHT OF CORES	T 148
COMPRESSIVE STRENGTH	ARIZ 314

T = AASHTO TEST
C = ASTM TEST

ADOT 44-9337 R03/05

SEE BACK ALSO

FIGURE 6

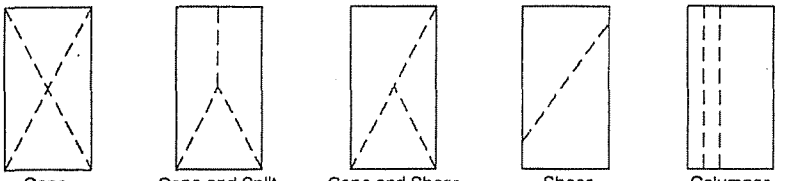

AGE: 28 DAY					
SPECIMEN IDENTIFICATION	INDICATE TYPE OF FRACTURE (✓)				
	CONE	CONE & SPLIT	CONE & SHEAR	SHEAR	COLUMNAR
165A	✓				
165B	✓				
165C	✓				

AGE:					
SPECIMEN IDENTIFICATION	INDICATE TYPE OF FRACTURE (✓)				
	CONE	CONE & SPLIT	CONE & SHEAR	SHEAR	COLUMNAR

EXAMPLE

ADOT 44-9337 R03/05 (Back)

FIGURE 7

PRECAST MORTAR BLOCKS TEST

(An Arizona Test Method)

SCOPE

1. (a) This test method covers the accepted procedure for determining the compressive strength of precast mortar spacer blocks which are used to maintain the proper clearance on reinforcing steel bars. Precast mortar spacer blocks are prepared utilizing portland cement, aggregates, water, and admixtures.

(b) The compressive strength of the precast mortar spacer blocks shall be equal to or greater than the required twenty-eight day strength of the concrete that will encase the spacer blocks.

(c) The normal compressive strength of the precast mortar spacer blocks shall be in a range between 15 to 40 MPa (2000 to 6000 psi).

(d) This test method may involve hazardous material, operations, or equipment. This test method does not purport to address all of the safety concerns associated with its use. It is the responsibility of the user to consult and establish appropriate safety and health practices and determine the applicability of any regulatory limitations prior to use.

(e) See Appendix A1 of the Materials Testing Manual for information regarding the procedure to be used for rounding numbers to the required degree of accuracy.

(f) Metric (SI) units and values are shown in this test method with English units and values following in parentheses. Values given for metric and English units may be numerically equivalent (soft converted) for the associated units, or they may be given as rounded or rationalized values (hard converted). Either the metric or English units along with their corresponding values shall be used in accordance with applicable specifications. See Appendix A2 of the Materials Testing Manual for additional information on the metric system.

APPARATUS

2. Requirements for the frequency of equipment calibration and verification are found in Appendix A3 of the Materials Testing Manual. Apparatus for this test procedure shall consist of the following:

(a) A testing machine that conforms to the description given in AASHTO T 22, Section 5.

(b) A saw having a diamond or silicon-carbide cutting edge capable of cutting specimens which conform to the prescribed dimensions, without excessive heating or shock.

(c) Alignment devices and melting pots for sulfur mortars, conforming to the applicable sections of AASHTO T 231.

PREPARATION

3. (a) The length of the specimen, when capped, shall be as nearly as practical twice the diameter or least width. A specimen having a length which is less than the diameter or least width after capping shall not be tested.

(b) The ends of the specimens to be tested in compression shall be essentially smooth, perpendicular to the longitudinal axis, and of the same cross-sectional area as the body of the specimen. If necessary, saw or tool the ends of the specimens until the following requirements are met:

1) Projections, if any, shall not extend more than 5 mm (0.2 inch) above the end surfaces.

2) The end surfaces shall not depart from the perpendicular to the longitudinal axis by more than 5 degrees.

(c) Before making the compression test, cap the ends of the specimens in conformance with the procedure prescribed in the applicable section of AASHTO T 231. The capped surfaces of the specimens shall conform to the planeness requirements of AASHTO T 231.

(d) Prior to testing, measure the length of the capped specimen to the nearest 2.5 mm (0.1 inch) and use this length to compute the ratio of length to diameter or least width. Determine the dimension of the diameter or each width by averaging two measurements taken at the 1/3 points of the length of the specimen. Measure the diameter or each width and determine the average dimension to at least the nearest 2.5 mm (0.1 inch). If the ratio of length to diameter or least width of the specimen exceeds 2.10, the specimen shall be reduced in length to have a ratio of 1.94 to 2.10.

TEST PROCEDURE

4. (a) Test the specimens in accordance with the applicable provisions of AASHTO T 22.

Note: Short specimens fail at a greater load because the steel platens of the testing machine restrain lateral expansion throughout the specimen more effectively. The effect of end restraint is conventionally assumed to be negligible for a standard specimen with a ratio of length to diameter or least width of two. Short specimens are clearly defined in both AASHTO T 22 and T 24.

CALCULATIONS

5. (a) Calculate the compressive strength of each specimen using the computed cross-sectional area based on the average area of the specimen.

(b) Specimens which have a ratio of length to diameter or least width of 1.94 to 2.10 require no correction.

(c) If the ratio of length to diameter or least width of the specimen is less than 1.94, apply correction factors shown in the following table:

Ratio of Length to Diameter or Least Width	Strength Correction Factor
1.75	0.98
1.50	0.96
1.25	0.93
1.00	0.87
Values not given in the table shall be determined by interpolation.	

REPORT

6. (a) The compressive strength of the tested specimen at ultimate load shall be reported to the nearest 50 kPa (10 psi), after correction for length to diameter or least width ratio when appropriate.

OBTAINING AND TESTING DRILLED CORES AND SAWED BEAMS OF CONCRETE

(A Modification of AASHTO Designation T 24)

1. This test procedure is the same as specified in AASHTO T 24, with the following exceptions:

(a) Section 7.5 of AASHTO T 24 is revised to read:

7.5 *Measurement* – Prior to testing, measure the length of the capped specimen to the nearest 0.1 inch (2.5 mm) and use this length to compute the length-diameter ratio. Each test specimen shall be measured to determine its diameter. The diameter shall be the average of two measurements, taken using a caliper, at right angles to each other at about mid-height of the specimen. The individual diameter measurements shall be determined to the nearest 0.01 inch (0.25 mm). Determine and record the average of the two diameter measurements to the nearest 0.01 inch (0.25 mm). That value shall be the diameter used to calculate the cross-sectional area of the test specimen. Do not test the core if the difference between the largest diameter measurement and the smallest diameter measurement exceeds 5% of their average.

(b) Section 7.6 of AASHTO T 24 is revised to read:

7.6 *Testing* – Test the specimens in accordance with Arizona Test Method 314, except unbonded caps (neoprene or other elastomeric materials) with metal retainers shall not be used. Unless otherwise specified, the specimens shall be tested within seven days after coring.

(c) Section 7.8 of AASHTO T 24 is revised to read:

7.8 *Report* – Report the results as required by Arizona Test Method 314, with the addition of the following information:

(d) Section 7.8.1 of AASHTO T24 is revised to read:

7.8.1 The location where the core was obtained. The length of the core as drilled to the nearest 0.2 inch (5 mm),

(e) Section 7.8.2 of AASHTO T 24 is revised to read:

7.8.2 The length of the test specimen before and after capping or end grinding to the nearest 0.1 inch (2.5 mm), and the average diameter of the core to the nearest 0.01 inch (0.25 mm),

(f) Section 7.8.3 of AASHTO T 24 is revised to read:

7.8.3 The compressive strength of the test specimen to the nearest 10 psi (50 kPa), after correction for the length-diameter ratio when required. In addition, if the average compressive strength is determined for multiple specimens, the average compressive strength to the nearest 10 psi (50 kPa),

November 14, 2008
(2 Pages)

SERIES 400

BITUMINOUS MIXTURES

The following test methods shall be performed in accordance with the respective designation:

ARIZONA TEST METHODS:

TITLE	DESIGNATION
Moisture Content of Bituminous Mixtures…….	ARIZ 406c
Compaction and Testing of Bituminous Mixtures Utilizing 101.6 mm (Four Inch) Marshall Apparatus…….	ARIZ 410c
Determination of Transverse Distributor Spread Rate……	ARIZ 411
Density of Compacted Bituminous Mixtures by the Nuclear Method…….	ARIZ 412b
Extraction of Asphalt from Bituminous Mixtures by Soxhlet Extraction……..…..	ARIZ 413
Bulk Specific Gravity and Bulk Density of Compacted Bituminous Mixtures……..…..	ARIZ 415c
Preparing and Splitting Field Samples of Bituminous Mixtures for Testing……..……..…	ARIZ 416d
Maximum Theoretical Specific Gravity of Field Produced Bituminous Mixtures (Rice Test)……...	ARIZ 417b
Bituminous Material Content of Asphaltic Concrete Mixtures by the Nuclear Method……..…	ARIZ 421
Compaction and Testing of Bituminous Mixtures Utilizing 152.4 mm (Six Inch) Marshall Apparatus…….	ARIZ 422

ARIZONA TEST METHODS: (continued)

TITLE	DESIGNATION
Determination of Air Voids in Compacted Bituminous Mixtures…….....……..	ARIZ 424a
Asphalt Binder Content of Asphaltic Concrete Mixtures by the Ignition Furnace Method…….……	ARIZ 427

AASHTO TEST METHODS:

TITLE	DESIGNATION
Quantitative Extraction of Bitumen from Bituminous Paving Mixtures……..	T 164
Preparing and Determining the Density of Hot-Mix Asphalt (HMA) Specimens by Means of the Superpave Gyratory Compactor ……..……...	T 312

NOTE: It shall be assured that the appropriate test methods as given in the project requirements are being adhered to.

MOISTURE CONTENT OF BITUMINOUS MIXTURES

(An Arizona Method)

SCOPE

1. (a) This method is used to determine the percent moisture in bituminous mixtures. The option of using a conventional oven or a microwave oven is provided. In case of dispute, the conventional oven shall be utilized.

(b) This test method may involve hazardous material, operations, and equipment. This test method does not purport to address all of the safety problems associated with its use. It is the responsibility of whomever uses this test method to consult and establish appropriate safety and health practices and determine the applicability of regulatory limitations prior to use.

APPARATUS

2. The apparatus shall consist of the following:

(a) Suitable sample containers for use in testing with the conventional oven or microwave oven.

(b) Oven - A thermostatically controlled oven capable of maintaining a temperature of 290 $\pm$ 10° F; or, a microwave oven capable of variable heat intensity settings.

(c) A balance or scale capable of measuring the maximum weight to be determined, accurate to at least 0.1 gram.

PROCEDURE (CONVENTIONAL OVEN)

3. (a) Obtain a representative **1000 $\pm$ 50** gram sample in accordance with ARIZ 416.

(b) Record the tare weight of the container to the nearest 0.1 gram.

(c) Place sample in the container and weigh. Determine and record the wet weight of sample to the nearest 0.1 gram as "f".

(d) Place container and sample in a 290 ± 10° F oven and initially dry for a minimum of 1 hour. Weigh the container and sample. Record the weight to the nearest 0.1 gram.

(e) Continue drying and weighing until a constant weight is obtained; being the weight at which further drying does not alter the weight more than 0.1 gram at intervals of a minimum of 30 minutes.

(f) After constant weight is obtained, cover sample and allow to cool 30 ± 10 minutes at room temperature. Weigh and determine and record the dry weight of sample to the nearest 0.1 gram as "g".

(g) Proceed to section 5 for moisture content calculation.

PROCEDURE (MICROWAVE OVEN)

4. (a) Obtain a representative **1000 ± 50** gram sample in accordance with ARIZ 416.

(b) Record tare weight of the container to the nearest 0.1 gram.

(c) Place sample in the container and weigh. Determine and record the wet weight of sample to the nearest 0.1 gram as "f".

(d) Dry sample until a constant weight is obtained. The sample is considered to be at constant weight when further drying causes, or would cause, a difference in weight of not more than 0.1 gram. The sample shall be heated in such a manner that controls the intensity of heat generated to prevent splattering, aggregate breakage, and asphalt being "burned off". The method used with a microwave oven shall give results similiar to those achieved with a conventional oven.

(e) After constant weight is obtained, cover sample and allow to cool 30 ± 10 minutes at room temperature. Weigh and determine and record the dry weight of sample to the nearest 0.1 gram as "g".

CALCULATION

5. Calculate the percent moisture, "h", and record to the nearest 0.01% as shown below.

$$h = \frac{f - g}{f} \times 100$$

Where: h = Percent Moisture
f = Wet weight of sample
g = Dry weight of sample

COMPACTION AND TESTING OF BITUMINOUS MIXTURES UTILIZING 101.6 mm (FOUR INCH) MARSHALL APPARATUS

(A Modification of AASHTO T 245 and ASTM D 1559)

SCOPE

1. (a) This method covers the procedure for compacting and testing bituminous mixtures utilizing 101.6 mm (four inch) Marshall apparatus.

(b) This procedure is used for bituminous mixtures with a mix design gradation target of at least 85% passing the 19.0 mm (3/4 inch) sieve.

(c) This test method may involve hazardous material, operations, or equipment. This test method does not purport to address all of the safety concerns associated with its use. It is the responsibility of the user to consult and establish appropriate safety and health practices and determine the applicability of any regulatory limitations prior to use.

(d) See Appendix A1 of the Materials Testing Manual for information regarding the procedure to be used for rounding numbers to the required degree of accuracy.

(e) Metric (SI) units and values are shown in this test method with English units and values following in parentheses. Values given for metric and English units may be numerically equivalent (soft converted) for the associated units, or they may be given as rounded or rationalized values (hard converted). Either the metric or English units along with their corresponding values shall be used in accordance with applicable specifications. See Appendix A2 of the Materials Testing Manual for additional information on the metric system.

APPARATUS

2. Requirements for the frequency of equipment calibration and verification are found in Appendix A3 of the Materials Testing Manual. Apparatus for this test procedure shall consist of the following:

(a) Compaction Mold Assembly [101.6 mm (four inch) diameter] - Cylindrical mold, baseplate, and extension collar constructed of steel and conforming to the requirements of Figure 1. (Three compaction mold assemblies are normally utilized.)

(b) Specimen Extruding Device - Extrusion jack or press for extruding specimens from molds.

(c) Compaction Hammer.

1) The compaction hammer shall either be a mechanical or hand compaction hammer having a flat, circular tamping face with a nominal diameter of 98.4 mm (3-7/8 inches), and a 4536.0 ± 113.4 gram (10 ± 1/4 pound) sliding weight with a free fall of 457.2 ± 12.7 mm (18 ± 1/2 inches).

2) Compaction hammers must be monitored through the ADOT proficiency sample program. To be qualified, compaction hammers must produce specimens with an average density of no greater than ± 16.0 kg/m^3 (1.0 lb./cu. ft.) from the average bulk density for the most recent set of proficiency samples. If neither of the bulk density results for the proficiency samples meet the ± 16.0 kg/m^3 (1.0 lb./cu. ft.) criteria, the hammer is not qualified.

3) As an alternate to qualifying a compaction hammer through the proficiency sample program, a compaction hammer may be qualified by correlating with a hammer which has been approved through comparison with proficiency sample results. When qualified in this manner, results must be no greater than ± 8.0 kg/m^3 (0.5 lb./cu. ft.).

4) Hammers which have had adjustments or repairs made to them after being qualified, must be requalified by correlating with another qualified hammer and yield results within ± 8.0 kg/m^3 (0.5 lb./cu. ft.).

NOTE: In that Marshall compaction equipment can go out of calibration at any time, each laboratory is encouraged to establish a method of ensuring that their equipment remains in calibration. Alternate methods that can be used include regular comparisons with other approved hammers or compaction of samples which have a known density.

5) Hammers which do not meet the above requirements may be adjusted by modifying the weight, or the height of fall, within the given criteria; by adjusting the number of blows a maximum of ± 10 from the specified 75 blows; or by a combination of adjustments to weight, height of fall, or number of blows.

6) Should a compacton pedestal be moved or replaced, the compaction hammer(s) shall be requalified.

(d) Compaction pedestal - The compaction pedestal shall consist of a 203.2 mm by 203.2 mm by 457.2 mm (8" x 8" x 18") wooden post capped with a 304.8 mm by 304.8 mm by 25.4 mm (12" x 12" x1") steel plate. The steel cap shall be firmly fastened to the post. The wooden post shall have a dry weight of 673 to 769 kg/m^3 (42 to 48 lbs./cu. ft.) and shall rest squarely on, and be firmly secured to, a solid concrete slab. The pedestal assembly shall be installed so that the post is plumb and the cap is level.

(e) Specimen Mold Holder - Mounted on the compaction pedestal so as to center the compaction mold over the center of the post. It shall hold the compaction mold, collar, and base plate securely in position during compaction of specimen.

(f) Oven for heating bituminous mixtures and specimen mold assemblies at required temperature.

(g) Hot plate for heating compaction hammer, spoon and spatula.

(h) A flat spatula with blade approximately 25 mm (1 inch) wide and at least 150 mm (6 inches) long, stiff enough to penetrate the entire bituminous mixture.

(i) Thermometers for determining temperatures of bituminous mixtures. Armored glass thermometers or dial-type with metal stem with a range of 10 to 200 °C (50 to 400 °F) are recommended. Thermometers shall have increments of not greater than 2.8 °C (5 °F).

(j) A balance or scale capable of measuring the maximum weight to be determined and conforming to the requirements of AASHTO M 231, except the readability and sensitivity of any balance or scale utilized shall be at least one gram.

(k) Large spoon for placing mixtures in specimen molds.

(l) If Marshall stability and flow are to be determined, the following additional apparatus is required:

1) Breaking Head and Water Bath, conforming to the requirements specified in AASHTO T 245.

2) Marshall stability and flow testing apparatus, with operating instruction manual. The apparatus shall be capable of applying a load with a constant rate of travel of 50.8 ± 2.5 mm (2.0 ± 0.1 inches) per minute.

3) Height gauge capable of measuring the height of specimens to the nearest 0.1 mm (0.001 inch).

PROCEDURE

3. (a) Obtain three representative samples for Marshall specimens, as described in Arizona Test Method 416. If the Combined Aggregate Bulk (O.D.) Specific Gravity is known, the weight calculated by the following equation (± 50 grams) will normally give specimens which meet the height requirement of 58.4 to 68.6 mm (2.300 to 2.700 inches):

$$\begin{bmatrix} \text{Weight of} \\ \text{each Sample} \end{bmatrix} = \frac{\begin{bmatrix} \text{Combined Aggregate} \\ \text{Bulk (O.D.) Specific Gravity} \end{bmatrix}}{2.520} \times 1150$$

(b) Before placing in the mold, the mixture and a mold assembly (baseplate, mold and collar) shall be at approximately 143 °C (290 °F). The face of the compaction hammer shall be thoroughly cleaned and heated on a hot plate set at approximately 143 °C (290 °F). The temperature of the laboratory during compaction of the specimens shall be between 20 and 30 °C (68 and 86 °F).

(c) Place a 101.6 mm (4 inch) paper disc in the bottom of the mold before the mixture is introduced. Place the entire batch in the mold with a heated spoon, spade the mixture vigorously, penetrating the entire mixture, with the heated spatula 15 times around perimeter and 10 times over the interior. Smooth the surface of the mix to a slightly rounded shape.

(d) Unless otherwise indicated on the mix design, the compaction temperature range (except for recycle mixes and bituminous mixtures containing asphalt-rubber) shall be as shown in Table 1 below for the specified type of bituminous material. For asphalt-rubber mixes, the compaction temperature range shall be 163 ± 6 °C (325 ± 10 °F). For recycle mixes, the compaction temperature range shall be 141 ± 6 °C (285 ± 10 °F).

TABLE 1	
Bituminous Material	Compaction Temperature Range
AC 10, AC 20	138 ± 6 °C (280 ± 10 °F)
AC 30, AC 40	141 ± 6 °C (285 ± 10 °F)
PG 58-XX, PG 64-XX	138 ± 6 °C (280 ± 10 °F)
PG 70-XX, PG 76-XX	141 ± 6 °C (285 ± 10 °F)
Polymer Modified Asphalts	143 ± 6 °C (290 ± 10 °F)

(e) If necessary, the mixture and mold shall be returned to an oven at the required temperature for the minimum time necessary to achieve the required compaction temperature.

(f) Place a 101.6 mm (4 inch) paper disc on top of material, place the mold assembly on the compaction pedestal in the mold holder, and apply 75 blows [or adjusted number, as determined in paragraph 2(c)] with the compaction hammer. When a hand hammer is utilized, the operator shall hold the handle by one hand so that the axis of the compaction hammer is as nearly perpendicular to the base of the mold assembly as possible while compaction is accomplished. Care shall be taken not to add body weight to the hammer by leaning or pressing down on the hammer. When using a hand hammer, no mechanical device of any kind is to be used to restrict movement of the handle during compaction. Compaction shall be performed at a minimum rate of 40 blows per minute. The compaction hammer shall apply only one blow with each fall, that is, there shall not be a rebound impact. Remove the base plate and collar, and reverse and reassemble the mold. Apply 75 (or adjusted number) compaction blows to the face of the reversed specimen.

(g) Remove collar, baseplate, and paper discs, and allow specimen to cool. Cooling may be accomplished at room temperature, in a 25 °C (77 °F) air bath, or if more rapid cooling is desired the mold and specimen may be placed in front of a fan until cool.

(h) Extrude the specimen from the mold. Care shall be taken in extruding the specimen from the mold, so as not to develop tensile stresses in the specimen or tear the sides of the specimen.

SPECIMEN TESTING

4. Specimens prepared as above shall be tested by some or all of the following procedures, as applicable due to testing requirements and availability of apparatus.

(a) If Marshall stability and flow are to be determined, measure height of specimens to the nearest 0.1 mm (0.001 inch). Prior to measurement of height, excess material shall be brushed from the edges of the specimens. Compacted specimens shall be 58.4 to 68.6 mm (2.300 to 2.700 inches) in height. If this criteria is not met, the entire set of specimens shall be discarded and a new set prepared after necessary adjustments in sample weight have been made.

(b) Determine the specific gravity of the specimens in accordance with Arizona Test Method 415, Method A. (Assume specimen is at constant weight after cooling.)

(c) Determine the bulk density of each of the specimens, by multiplying the respective specific gravity by 998 kg/m^3 (62.3 lbs./cu. ft.). Record the individual bulk densities to the nearest 1 kg/m^3 (0.1 lb./cu. ft.). The densities of the three specimens shall not differ by more than 40 kg/m^3 (2.5 lbs./cu. ft.) for 12 mm (1/2"), 19 mm (3/4"), or recycle mixes; and 48 kg/m^3 (3.0 lbs./cu. ft.) for 25 mm (base) mixes. If this density requirement is not met, the entire set of specimens shall be discarded and a new set of specimens prepared.

(d) Determine the average specific gravity of the specimens and record to the nearest 0.001. Calculate the average bulk density of the specimens, by multiplying the average specific gravity by 998 kg/m^3 (62.3 lbs./cu. ft.). Record the average bulk density to the nearest 1 kg/m^3 (0.1 lb./cu. ft.).

(e) If the stability and flow are to be determined, the steps in paragraphs (f) through (k) below are followed, utilizing apparatus in accordance with the operating instructions for that apparatus.

(f) Bring the specimens to 60 $\pm$ 1 °C (140° $\pm$ 1.8 °F) by immersing in the water bath 30 to 40 minutes. Prior to testing, it shall be assured that the inside of the test heads are clean, and that the guide rods are clean and lubricated so that the upper test head slides freely over them.

(g) The breaking head temperature shall be maintained between 21 to 38 °C (70 to 100 °F), using a water bath when required. Remove the specimen from the water bath, quickly towel dry specimen and place in the lower segment of the

breaking head. Place the upper segment of the breaking head on the specimen, and place the complete assembly in position on the testing machine.

(h) Apply the load to the specimen with a constant rate of 50.8 ± 2.5 mm (2.0 ± 0.1 inches) per minute until the maximum load is reached and the load decreases. The maximum load is defined as the last point in the load/time curve before the load decreases. The elapsed time for the test from removal of the test specimen from water bath to maximum load determination shall not exceed 30 seconds.

(i) Record the stability of each specimen to the nearest 50 newtons (10 pounds force), and the flow to the nearest 0.1 mm (0.01 inch).

(j) Correct the stability obtained for each specimen, for the height of the specimen, by the table in Figure 2. Record the corrected stability to the nearest 50 newtons (10 pounds force).

(k) Determine and record the average corrected stability to the nearest 50 newtons (10 pounds force), and the average flow to the nearest 0.1 mm (0.01 inch).

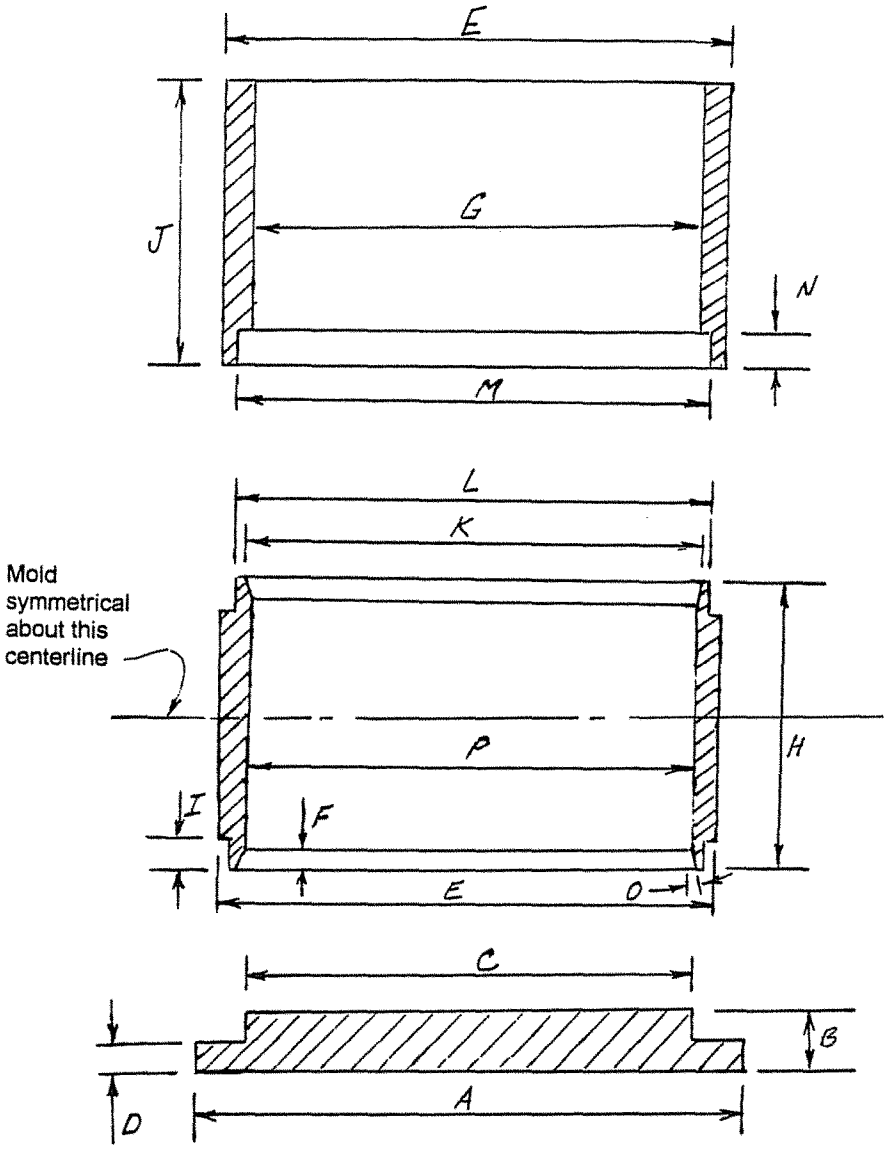

A	120.6 mm (4-3/4 in.)	H	87.3 mm (3-7/16 in.)
B	14.3 mm (9/16 in.)	I	6.4 mm (1/4 in.)
C	101.2 mm (3-63/64 in.)	J	69.8 mm (2-3/4 in.)
D	3.2 to 7.1 mm (1/8 to 9/32 in.)	K	105.6 mm (4-5/32 in.)
E	114.3 mm (4-1/2 in.)	L	108.7 mm (4-9/32 in.)
F	4.8 mm (3/16 in.)	M	109.1 mm (4-19/64 in.)
G	104.8 mm (4-1/8 in.)	N	7.1 mm (9/32 in.)
O	20°		
P	101.35 to 101.85 mm (3.990 to 4.010 in.)		

All dimensions are nominal, except where tolerances are indicated.

101.6 mm (Four Inch) Compaction Mold, Extension Collar, and Baseplate

FIGURE 1

STABILITY CORRELATION RATIOS*
For 101.6 mm (4 inch) Diameter Specimens

Height of Specimen (millimeters)	Height of Specimen (Inches)	Correlation Ratio
58.4 - 58.5	2.300 - 2.306	1.15
58.6 - 58.8	2.307 - 2.319	1.14
58.9 - 59.1	2.320 - 2.332	1.13
59.2 - 59.5	2.333 - 2.344	1.12
59.6 - 59.8	2.345 - 2.357	1.11
59.9 - 60.1	2.358 - 2.369	1.10
60.2 - 60.4	2.370 - 2.381	1.09
60.5 - 60.7	2.382 - 2.393	1.08
60.8 - 61.0	2.394 - 2.405	1.07
61.1 - 61.3	2.406 - 2.417	1.06
61.4 - 61.6	2.418 - 2.430	1.05
61.7 - 62.0	2.431 - 2.445	1.04
62.1 - 62.4	2.446 - 2.461	1.03
62.5 - 62.8	2.462 - 2.477	1.02
62.9 - 63.2	2.478 - 2.492	1.01
63.3 - 63.7	2.493 - 2.507	1.00
63.8 - 64.0	2.508 - 2.522	0.99
64.1 - 64.4	2.523 - 2.537	0.98
64.5 - 64.8	2.538 - 2.553	0.97
64.9 - 65.3	2.554 - 2.573	0.96
65.4 - 65.8	2.574 - 2.594	0.95
65.9 - 66.3	2.595 - 2.615	0.94
66.4 - 66.8	2.616 - 2.634	0.93
66.9 - 67.2	2.635 - 2.649	0.92
67.3 - 67.6	2.650 - 2.663	0.91
67.7 - 68.0	2.664 - 2.679	0.90
68.1 - 68.4	2.680 - 2.697	0.89
68.5 - 68.6	2.698 - 2.700	0.88

* The measured stability of a specimen multiplied by the correlation ratio for the height of the specimen equals the corrected stability for a 63.5 mm (2- 1/2 inch) specimen.

FIGURE 2

DETERMINATION OF TRANSVERSE DISTRIBUTOR SPREAD RATE
(A modification of Tentative Test Calif. 339 - A)

Scope

1. This description covers the field test procedure for determining the transverse spread rate in gallons per square yard of bituminous distributors.

Apparatus

2. The apparatus shall consist of the following:

(a) Balance. The balance shall conform to AASHTO M 213, Class D.

(b) Suitable weighing box or shield for balance.

(c) Metal sheets 7-7/8 x 84, 20 gauge galvanized.

(d) Balance table and work table. Light metal camp tables have been found very convenient.

(e) 1 x 6 x 8 boards. (For alternate sampling procedure)

Materials

3. (a) Cotton gauze pads 4 x 8, 12 ply.

(b) 5" x 12" strips cut from heavy wrapping paper.

(c) Masking tape, ½" width.

(d) Scotch tape, ¾" width

(e) Rubber cement for fastening cotton pads to paper strips.

Preparation of Test Plates

4. (a) Attach a cotton pad to each paper strip with rubber cement, then secure each corner of the cotton pad with a staple. Pads are to be placed on the paper strips as shown in Figure 1.

NOTE: Normally one cotton pad will be adequate, but when testing with heavy spread rates or rubberized asphalt it may be necessary to staple an additional pad to each paper strip. In fastening cotton pads to the paper strips the application of rubber cement should be heavy enough to hold the pad to the paper, but not so heavy that it blocks the absorption of the pad.

(b) Place a strip of scotch tape along each end of the paper strip as shown in Fig. 1. This will allow the masking tape to be easily removed from the paper strip during the removal process in 5 (c) or 6(e).

(c) Place an identification number on the back of each assembled paper strip and cotton pad.

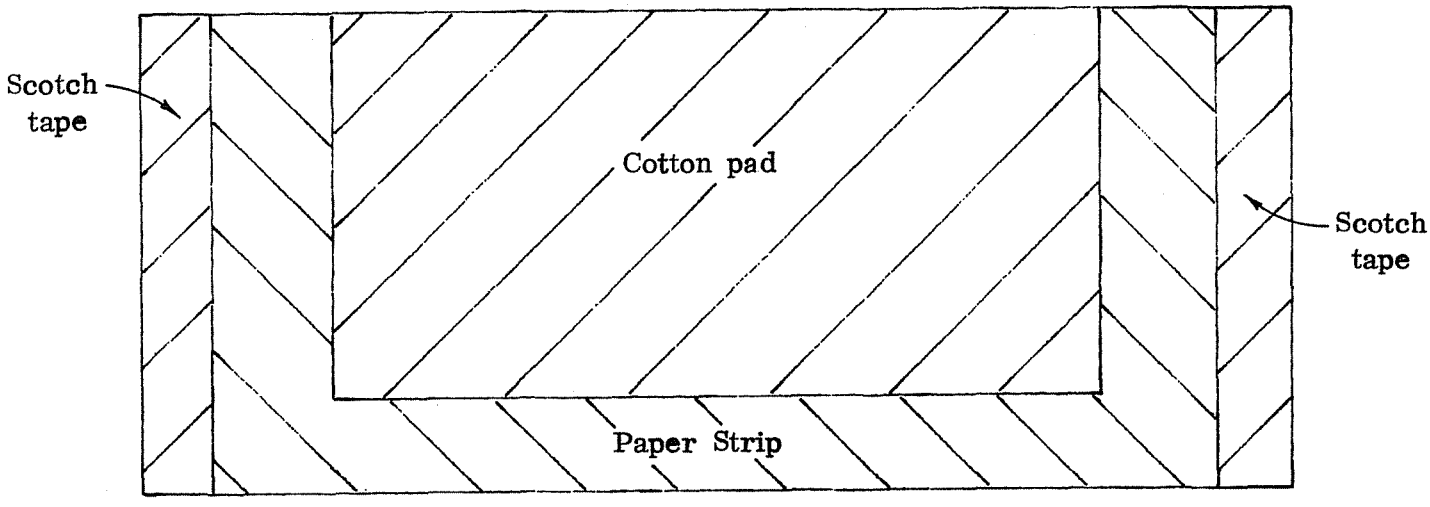

Figure 1.

(d) Weigh the pads with the paper backing attached after they are thoroughly dry to determine the average tare weight. Record to the nearest 0.1 gram.

(e) Attach the paper strips to the metal sheet so that the cotton pads are snug against each other by overlapping the adjacent strips 1 inch, and securing to metal sheet with masking tape on reverse side. (21 paper strips with pads attached will be required to fabricate one test place.)

(f) Wrap assembled test plates in heavy wrapping paper to keep them clean while being stored or transported to test site.

Sampling

5. (a) As the distributor approaches, place the test plates across the roadway, with pad no. 1 being toward the centerline of the roadway and numbering increasing towards the shoulder of the road.

NOTE: Do not allow traffic to drive over the sample pads (the relatively slow moving distributor does not disturb the test plates).

(b) When the distributor has passed leave the test plates in place a short time to allow the bituminous material to harden slightly and prevent running on the pads, then remove test plates from the pavement.

(c) Place the test plate assembly on the work table, then remove and fold each pad and paper strip, starting with the highest number and proceding to the lowest number, stacking folded pads on the top of each other. (Care should be taken not to remove any of the paper when removing the masking tape.)

(d) As soon as the removal operation is completed place the pads in the weigh box, and then weigh in order to the nearest 0.1 gram. Record the weight of each pad, starting the recording with pad no. 1, the pad nearest the centerline of the pavement. If a tare is used during weighing, record the net weight of the bitumen, otherwise the previously determined average weight of the individual pads must be subtracted from the total weight of pad + bitumen.

NOTE: In very hot weather, remove and weigh the sample pads in the shade and with as little delay as possible. If substantial delay occurs, prepare a control sample with a known weight of binder and weigh at intervals to determine the evaporation loss rate and a correction.

Alternate Sampling Procedure

6. *NOTE: This procedure allows for sampling distributor trucks in restricted areas where normal applications are not possible.*

(a) Place 1″ x 6″ x 8′ boards in a suitable location and then lay test plates on top of the boards, with pad no. 1 being on the drivers side of the truck.

NOTE: Boards should be protected from bituminous material by wrapping them in heavy paper.

(b) Back distributor truck up to test plates so that the back wheels of the truck are a few inches from the test plates.

(c) Drive the distributor truck forward at a constant rate and apply bituminous material across test plates.

(d) After spraying operation leave the test plates in place a short time to allow the bituminous material to harden slightly and prevent running on the pads, then remove the test plates and boards.

(e) Place the test plate assembly on the work table, then remove and fold each pad and paper strip starting with the highest number and proceding to the lowest number, stacking folded pads on the top of each other. (Care should be taken not to remove any of the paper when removing the masking tape.)

(f) When the removal operation is completed weigh the pads in order, to the nearest 0.1 gram. Record the weight of each pad, starting the recording with pad no. 1, the pad nearest the drivers side of the truck. If a tare is used during weighing, record the net weight of the bitumen, otherwise the previously determined average weight of the individual pads must be subtracted from the total weight of pad + bitumen.

Calculations

7. (a) Multiply the net weight of binder on each pad by 0.0107, or use the table found in Figure 2 to obtain the spread rate in gal./sq. yd. to the nearest .001 gal.

(b) Determine the average spread rate in gal./sq. yd. by dividing the total quantity of binder collected on the pads by the number of pads. Omit end pads that show very low spread rates due to feathering and also end pads showing a heavy rate due to the use of shields. Normally those to be eliminated can be determined by inspection but if a more uniform method is desired the following

procedure may be used: Calculate the average spread rate using all pads having a binder content of over 0.050 gal/sq. yd. Omit all end pads varying by more than the specified limits from the above calculated average spread rate, then recalculate the average spread rate.

Report

8. Report the following:

(a) The spread rate in gal./sq. yd. for each test pad, to the nearest .001 gal.

(b) The average spread rate in gal./sq. yd. to the nearest .001 gal.

(c) Any test pads varying by more than the specified limits from the average spread rate.

(d) For further study the spread rate in gal./sq. yd. for each test pad, the average spread rate, and the specified limits may be plotted on graph paper.

CONVERSION TABLE
Net weight of binder on 4" x 8" pads to gals./sq. yd.

grams	.0	.1	.2	.3	.4	.5	.6	.7	.8	.9
8	.086	.087	.088	.089	.090	.091	.092	.093	.094	.095
9	.096	.097	.098	.099	.100	.102	.103	.104	.105	.106
10	.107	.108	.109	.110	.111	.112	.113	.114	.116	.117
11	.118	.119	.120	.121	.122	.123	.124	.125	.126	.127
12	.128	.129	.131	.132	.133	.134	.135	.136	.137	.138
13	.139	.140	.141	.142	.143	.144	.146	.147	.148	.149
14	.150	.151	.152	.153	.154	.155	.156	.157	.158	.159
15	.160	.162	.163	.164	.165	.166	.167	.168	.169	.170
16	.171	.172	.173	.174	.175	.177	.178	.179	.180	.181
17	.182	.183	.184	.185	.186	.187	.188	.189	.190	.192
18	.193	.194	.195	.196	.197	.198	.199	.200	.201	.202
19	.203	.204	.205	.206	.208	.209	.210	.211	.212	.213
20	.214	.215	.216	.217	.218	.219	.220	.221	.223	.224
21	.225	.226	.227	.228	.229	.230	.231	.232	.233	.234
22	.235	.236	.237	.239	.240	.241	.242	.243	.244	.245
23	.246	.247	.248	.249	.250	.251	.252	.254	.255	.256
24	.257	.258	.259	.260	.261	.262	.263	.264	.265	.266
25	.267	.269	.270	.271	.272	.273	.274	.275	.276	.277
26	.278	.279	.280	.281	.282	.284	.285	.286	.287	.288
27	.289	.290	.291	.292	.293	.294	.295	.296	.297	.298
28	.300	.301	.302	.303	.304	.305	.306	.307	.308	.309
29	.310	.311	.312	.313	.315	.316	.317	.318	.319	.320
30	.321	.322	.323	.324	.325	.326	.327	.328	.330	.331
31	.332	.333	.334	.335	.336	.337	.338	.339	.340	.341
32	.342	.343	.344	.346	.347	.348	.349	.350	.351	.352
33	.353	.354	.355	.356	.357	.358	.359	.361	.362	.363
34	.364	.365	.366	.367	.368	.369	.370	.371	.372	.373
35	.374	.376	.377	.378	.379	.380	.381	.382	.383	.384

Figure 2

DENSITY OF COMPACTED BITUMINOUS MIXTURES - NUCLEAR METHOD

(An Arizona Method)

SCOPE

1. (a) This method is used to determine the in-place density of compacted layers of bituminous mixtures by use of nuclear apparatus.

(b) This test method involves hazardous materials, operations, and equipment. This test method does not purport to address all of the safety problems associated with its use. It is the responsibility of whoever uses this test method to consult and establish appropriate safety and health practices and determine the applicability of regulatory limitations prior to use.

(c) Safety procedures for operation, transport and storage of nuclear gauges shall be in accordance with the manufacturer's recommendations and the applicable regulations of the Arizona Radiation Regulatory Agency (ARRA).

APPARATUS

2. The apparatus shall consist of the following:

(a) Moisture/Density Nuclear gauge capable of determining densities by the backscatter method. Calibration of the gauge shall be performed in accordance with AASHTO T310, Annexes A1, A2 and A3, on an annual basis.

(b) Reference standard block or test stand to obtain standard counts for moisture and density which are used to check the gauge stability.

(c) Nuclear gauge transport case and labels which comply with A.R.R.A. Regulations.

(d) Charging cord, if applicable.

(e) Radiation exposure badge (if required by license .with A.R.R.A.)

(f) Information packet for the nuclear gauge which shall contain the following items:

(g) Moisture/Density Calibration Tables (if required), and a standard count log book.

(h) Manufacturer's Gauge Operation Manual for the nuclear gauge.

(i) Applicable documentation necessary to meet requirements of ARRA for gauge safety.

(j) Blank test forms for use on the applicable nuclear gauge.

(k) Calculator for necessary computations.

(l) Miscellaneous equipment including watch, pencils, writing paper, ruler, eraser, clip board, and hand cart as required.

GAUGE STABILITY CHECK

3. A density standard count and moisture standard count shall be taken at the beginning of each day of testing at the project where the field density testing is to be performed. The gauge stability check shall be performed as follows:

(a) Place the reference standard block on any asphalt, concrete, compacted aggregate or similar surface which is dry and level. The reference standard block should be at least at least 15 feet away from any large object, or vehicle, and at least 50 feet away from another nuclear gauge.

(b) Seat the nuclear gauge on the reference block in accordance with the gauge operation manual. It is very important that the gauge is seated properly on the standard reference block.

(c) Remove the lock on the source handle and make sure the source handle is in the safe or stored position (the top notch on the index rod).

(d) Turn the gauge on (in standby power condition) and allow it to warm-up, if necessary, for the recommended time as given in the gauge operation manual.

(e) After the warm-up period, take a standard moisture count and a standard density count in accordance with the gauge operation manual.

(f) Record the moisture and density standard counts in the proper columns of the standard count log book along with the appropriate additional information, such as date, time, temperature, and location.

(g) Return the gauge to the standby power condition. The gauge should be left in the standby mode for subsequent testing.

(h) Determine if the standard counts are within the limits for normal operation in accordance with the gauge operation manual. This is usually done by comparing the standard counts to the average of the four previous standard counts or utilizing an internal statistical test which is available on some gauges. Additional standard counts may be necessary if initially the gauge does not appear to be operating properly. If the gauge does not meet the normal operating parameters as specified by the Standard Count procedure in the gauge operation manual, the gauge should not be used for testing. It should be sent in for servicing to determine the problem.

NOTE: Some gauges will store standard counts for later use in calculations performed by the gauge itself. The most recent standard counts will usually be stored automatically over pre-existing standard counts

(i) On a weekly basis, compare the average of the four most recent standard counts with the average of four standard counts immediately after gauge calibration or at least three months previous, whichever is shorter. If the accumulative shift in standard count exceeds 2% for moisture or 3% for density, the nuclear gauge should be recalibrated.

PROCEDURE

4. (a) At each location to be tested, two one-minute readings shall be obtained by taking the first reading and recording the wet density to the nearest 0.1 lb. per cu./ft. then rotating the gauge 180° (making sure that the gauge is set in the same footprint as the first reading) and taking another reading and again recording the wet density to the nearest 0.1 lb. per cu./ft. The two reading are then averaged.

(b) Normally the preparation of the surface for taking readings at each location shall not include the removal of any material for the purpose of making it more

smooth, except that particles which are completely unattached and merely lying loose on top of the compacted and bound mixture shall be brushed away. Not more than one pound of dry fine sand (minus #10 material) shall be spread over each location and then scraped away with a straightedge so that the mixture is visible over the majority of the surface.

PRECAUTIONS

5. (a) Except when actually in use performing tests, the gauge and its accessories are to be kept within the A.R.R.A. (Arizona Radiation Regulatory Agency) approved carrying case, to protect it from damage and to provide better radiation shielding for persons in its vicinity

EXTRACTION OF ASPHALT FROM BITUMINOUS MIXTURES BY SOXHLET EXTRACTION

(An Arizona Method)

Scope

1. This procedure is designed to determine the bitumen content of bituminous mixtures by extraction of the asphalt. It may also be used in conjunction with ARIZ 511 - Recovery of Asphalt from Extraction Solution, when small amounts of asphalt are required for further testing.

Apparatus

2. The apparatus shall consist of the following:

(a) Soxhlet Extraction Apparatus, 100 mm inside diameter, assembled as shown in Figure 1. (Cal-Glass for Research, Inc. #LG-103/60 Soxhlet Extraction apparatus has been found suitable for

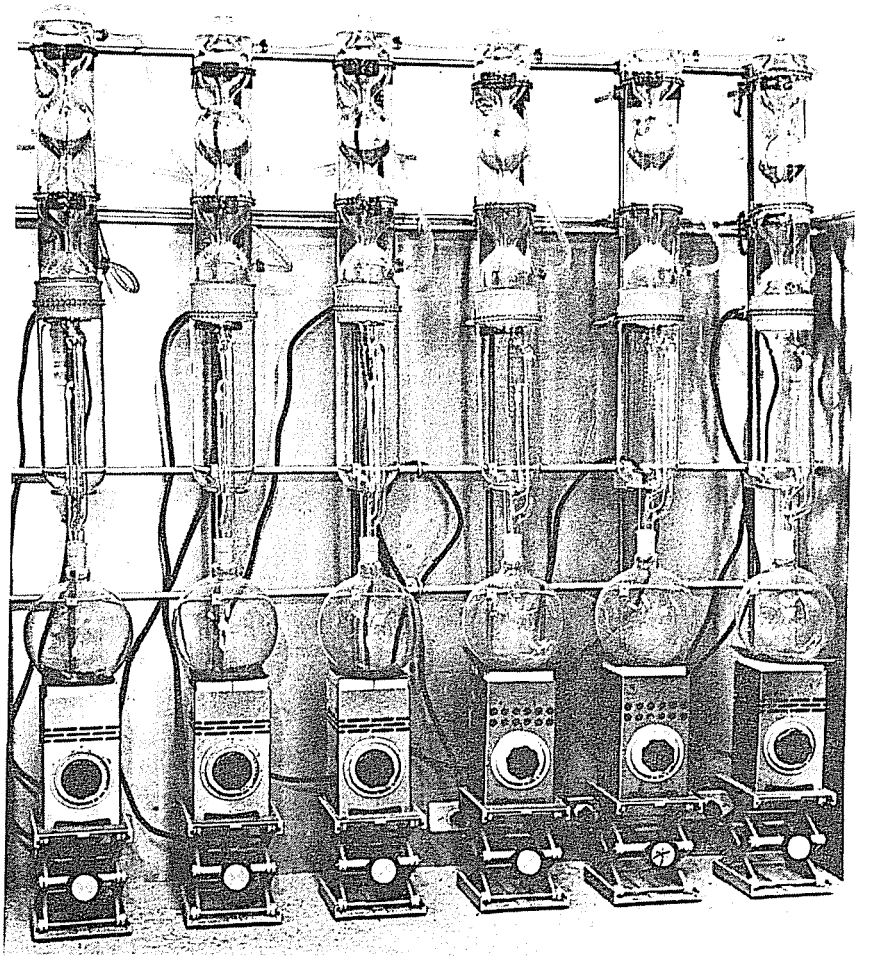

FIGURE 1

this procedure.) The condenser and extractor must be held individually in a fashion which allows the condenser to be moved vertically 4 to 5 inches, and the extractor to be removed and replaced with ease. The Soxhlet Extraction Apparatus shall be used under a functioning fume hood.

(b) Heating device with adjustment for temperature, capable of maintaining a constant flow rate of distillation, and able to hold the 3000 ml. round bottom extraction flask. (Precision Scientific, "Ful-Kontrol-750 watts", or similar is required.)

(c) Adjustable stand for heating device.

(d) Water source with miscellaneous tubing and clamps.

(e) Filter paper (Fluted, 50 cm., Grade 515)

(f) Methylene Chloride, Tech. Grade (Reclaimed Methylene is NOT recommended when solvent is to be subjected to ARIZ 511).

(g) Oven or hot plate capable of maintaining a temperature of $230^{o} \pm 9^{o}$ F.

(h) Balance, 5 kg. capacity, sensitive to 1 gram.

(i) Spoons, spatulas, pans, and miscellaneous tools.

(j) 1000 ml. beaker.

Sample Preparation

3. (a) A representative 1250 to 1750 gram sample of the bituminous mixture shall be obtained. A representative 500 to 1000 gram sample shall also be obtained for moisture determination (ARIZ 406b - Moisture in Bituminous Mixtures)

(b) When cores are being tested, they shall be heated and broken into small pieces.

Procedure

4. (a) Place a double layer of filter paper in a tared 1000 ml. beaker.

(b) Record weight of filter paper to the nearest gram as "b".

(c) Tare beaker with filter paper.

(d) Firmly place sample into filter paper while in beaker so that it is filled to a maximum of 1 inch below the top of filter paper. Record the weight of the sample to the nearest 1 gram as "i".

(e) Remove filter paper and sample from beaker. Place in Soxhlet Extractor.

(f) Place extractor in holder, slide condenser in place into top of extractor.

(g) Place 8 to 12 boiling chips into the 3000 ml extractor flask.

(h) Add methlene chloride to extraction flask until approximately 2/3 full.

(i) Place the flask on the heating device and raise adjustable stand so that the top of flask fits snugly into bottom of extractor.

(j) Turn on heat and control temperature so that the solvent boils rapidly, and a constant rate of distillation is maintained.

NOTE: *Once the heat has been turned on, the apparatus should not be left unattended for long periods of time until extraction is complete. During the extraction process, the amount of methylene chloride in the extraction flask should not be allowed to fall below the 1/4 full level.*

(k) The solvent normally will not syphon automatically when the liquid level reaches the syphon tube level. The addition of a few ml. of solvent through the condenser should initiate the action.

NOTE: *Caution must be exercised to not exceed 3/4 of the capacity of the extraction flask due to continued additions.*

(l) Continue the recycling until the extraction liquor is clear, usually 8 or 10 cycles will be sufficient.

(m) When extraction is complete, turn off heat and allow apparatus and sample to cool.

(n) Lower extraction flask and remove from heating device. If recovery of asphalt from methylene chloride is desired, subject contents of flask to ARIZ 511 - Recovery of Asphalt from Extration Solution. If bitumen content and sieve analysis of aggregate is all that is desired, discard contents of flask.

(o) Raise condenser so that the extractor which holds the sample may be removed.

(p) Transfer sample to clean tared pan for drying. Place filter paper in pan also. Thoroughly clean extractor, making certain all material is transferred into drying pan.

(q) Allow excess methylene chloride to evaporate under functioning fume hood, if desired cover sample and filter paper with a piece of aluminum foil which has been punctured 2-3 times, and then dry in oven or on hot plate at $230^{o} \pm 9^{o}$ F., to constant weight.

NOTE: *A micro-wave oven may be used to dry materials, provided proper attention is given to the use of apparatus; the intensity of heat generated so that sample does not splatter, and the ventilation of the exhaust fan. (If micro-wave oven is used the aluminum foil covering sample is not used.)*

(r) Record weight of dried aggregate (being sure to remove clinging aggregate from filter paper into aggregate pan before weighing) to the nearest 1 gram, as "d".

(s) Weigh filter paper which will contain minus No. 200 material and record to the nearest gram as "a". Discard filter paper.

NOTE: *Materials shall be weighed within 1/2 hour after removal from heat to assure moisture has not been absorbed.*

Sieve Analysis of Extracted Aggregate

5. The extracted aggregate shall be subjected to ARIZ 201 - "Dry Preparation and Sieving of Coarse and Fine Graded Soils and Aggregates".

Calculation and Example

6. Calculations to determine bitumen content and other data necessary are shown on laboratory card in Figure 2, along with an example.

Report

7. Report all values as required on the Asphaltic Concrete Tabulation laboratory card as shown in Figure 2.

MATERIALS SERVICES

ASPHALTIC CONCRETE TABULATION

RECEIVED DATE

LAB NUMBER	PROJ CODE	MATL.	TYPE	PURPOSE	LAB	SPEC #	SIZE	SIZE %
G 1								

TEST NO.	LOT OR SUFFIX	SAMPLED BY	MO.	DAY	YEAR	TIME

LIFT NO.	SAMPLED FROM	RDWY	STATION	PLUS

P = PIT
E = EXC.
I = IN PLACE

ORIGINAL SOURCE: RDWY | STATION OR PIT NO.

IF MILEPOST, INPUT DECIMAL IN COL. 78

PROJECT NUMBER

IF MILEPOST, INPUT DECIMAL IN COL. 69

REMARKS — **USE CAPITAL LETTERS!**

G 2 EXAMPLE SOXHLET EXTRACTION

KEYPUNCH INSTRUCTIONS: Duplicate col. 3 thru 7 on all cards

G 3 — COARSE FACTOR: 071174 — FINE FACTOR: 135468

		WEIGHTS RETAINED	% RET.	% PASS	SPECS.
	3"				
	2½"				
	2"				
	1½"				
0	1"	0	0	100	
93	3/4"	93	7	93	
194	1/2"	287	13	80	
75	3/8"	362	6	74	
179	1/4"	541	13	61	
96	#4	637	6		
761	-#4	768	s = r + c	55	
	Total	1405	e = c + d		

Total Dry Wt. of Pass # 4 Split: 406 — $t = \frac{q \times c}{r} + q$

G 4

		WEIGHTS RETAINED	% RET.	% PASS	
87	#8	87	12	43	
50	#10	137	7	36	
85	#16	222	11	25	
57	#30	279	8	17	
22	#40	301	3	14	
23	#50	324	3	11	
28	#100	352	4	7	
26	#200	378	3		
0	-#200	0		3.8	
	Total	378	u = DRY WEIGHT		
	Elutriation	28	= t - u		

Asphalt Content Target Value

WHITE ☐
YELLOW ☐
BLUE ☐

G 5 — ARIZ 413 **EXTRACTION TEST**

a. Wt. of filter and -#200	36	g
b. Predetermined Wt. of Filter	29	g
c. Dry Wt. of -#200 (a - b)	7	g
d. Dry Wt. of Extracted Agg.	1398	g
e. Dry Wt. of Ext. Agg. and -#200 (c + d) (enter in I below and course sieve total)	1405	g
f. Trap Reading	25	ml
g. Wt. of Moisture Sample	843	g
h. Moisture Content $\frac{100 \times f}{g - f}$	0.30	%
i. Initial Wt. of the AC Sample	1489	g
j. Wt. of Water (h × i ÷ 100)	4	g
k. Wt. of AC Less Water (i - j)	1485	g
l. Dry Wt. of Ext. Agg. and -#200 (e)	1405	g
m. Wt. of Ext. Asphalt (k - l)	80	g
n. Ext. Asphalt Content (m ÷ k × 100)	5.39	%
o. Asphalt Retention Factor	—	%
p. Total Asphalt Content (n + o)	5.39	%
q. O.D. Split Wt. of Pass # 4	402	g
r. Dry Wt. of Pass # 4	761	g

Abs. Visc. @ 140°F. 121380

G 6 — ARIZ 817 **VOIDS ANALYSIS**

C = Core
M = Marshall
H = Hveem

A. Asphalt Absorp. (O.D. Basis)		%
B. Asphalt Absorp. (100% of Mix) $\frac{(100 - p) \times A}{100}$		%
C. Effective Asph. Content (p - B)		%
D. AC Mix Dry Bulk Sp. Gr. (AASHTO T-166)		
E. Agg. Relative Dry Sp. Gr. $\frac{D \times (100 - p)}{100}$		
F. Combined Agg. Bulk O.D. Sp. Gr.		
G. V.M.A. $(1.000 - \frac{E}{F}) \times 100$	15.5 - 18.0	%
H. E.V. (Air Voids) $G - (\frac{D \times C}{1.015})$	4.0 - 6.0	%
I. Voids Filled $(\frac{G - H}{G}) \times 100$		%
J Samp. Max. Sp. Gr. $\frac{100 \times D}{100 - H}$ (OR RICE TEST, ARIZ-806)		
K. Samp. Max. Dens. J × 62.3		PCF
L. AC Mix Bulk Density (D × 62.3)		PCF
Stability		
Cohesion or Flow		

Asphalt Sp. Gr. = 1.015
Water Density = 62.3 PCF

Joe Tester
TEST OPERATOR

LABMAN, PROJECT SUPERVISOR, OR RESIDENT ENGINEER

44-9352 R3/81

SEE BACK ALSO

FIGURE 2

BULK SPECIFIC GRAVITY AND BULK DENSITY OF COMPACTED BITUMINOUS MIXTURES

(A Modification of AASHTO Designation T 166)

SCOPE

1. (a) This procedure covers the determination of bulk specific gravity and bulk density of specimens of compacted bituminous mixtures.

(b) This test procedure consists of two methods for determining bulk specific gravity and bulk density. These methods are referred to as "Method A" and "Method C (Rapid Test)".

NOTE: If it is desired to use "Method B", which is not included in this procedure, AASHTO T 166 shall be referred to. Method B should not be used with samples that contain open or interconnecting voids and/or absorb more than 2.0 percent water by volume. Method B is not acceptable for specimens that have more than six percent air voids.

(c) Method A should not be used with samples that contain open or interconnecting voids and/or absorb more than 2.0 percent water by volume as determined in paragraph 5(d). If the percent water absorbed by the specimen exceeds 2.0 percent, either Method C or AASHTO T 275 "Bulk Specific Gravity of Compacted Bituminous Mixtures Using Paraffin-Coated Specimens" shall be used.

(d) In the case of dispute when testing samples from an existing bituminous pavement, e.g. cores, "Method C" shall be used.

(e) This test method involves hazardous material, operations, and equipment. This test method does not purport to address all of the safety concerns associated with its use. It is the responsibility of the user to consult and establish appropriate safety and health practices and determine the applicability of regulatory limitations prior to use.

(f) See Appendix A1 of the Materials Testing Manual for information regarding the procedure to be used for rounding numbers to the required degree of accuracy.

TEST SPECIMENS

2. (a) Test specimens may be either laboratory molded specimens or samples from an existing bituminous pavement.

(b) Size of specimens - It is recommended that: (1) the diameter of cylindrically molded or cored specimens, or the length of the sides of sawed specimens, be at least four times the maximum size of the aggregate and, (2) the thickness of specimens be at least one and one half times the maximum size of the aggregate.

(c) Specimens shall be taken for bituminous pavements with a core drill, diamond or carborundum saw, or by other suitable means.

(d) Care shall be taken to avoid distortion, bending, or cracking of specimens during and after the removal from the pavement or mold. Specimens shall be stored in a safe, cool place.

(e) Test specimens shall be free from paper, tape, soil, and other foreign materials not intended to be tested as part of the specimen.

(f) If desired, specimens may be separated from other pavement layers by sawing or other suitable means. Care shall be exercised to ensure that specimens are not damaged during the separation process.

APPARATUS

3. Requirements for the frequency of equipment calibration and verification are found in Appendix A3 of the Materials Testing Manual. Apparatus for this test procedure shall consist of the following:

(a) Balance - A balance capable of measuring the maximum weight to be determined and conforming to the requirements of AASHTO M 231, except the readability and sensitivity of any balance utilized shall be at least 0.1 gram. The balance shall be equipped with a suitable suspension apparatus and holder to permit weighing the specimen while suspended from the center of the balance.

(b) Suspension Apparatus - The wire(s) suspending the holder shall be the smallest practical size to minimize any possible effects of a variable immersed length. The suspension apparatus shall be constructed to enable the container to be immersed to a depth sufficient to cover it and the test sample during weighing.

(c) Water bath - The water bath for immersing the specimen in water while suspended under the balance shall be equipped with an overflow outlet or a clearly marked "fill line" for maintaining a constant water level. The level of the water shall be adjusted before testing each specimen, if necessary, to maintain a constant water level.

(d) Oven - An oven capable of drying specimens at either 125 ± 5 °F (Method A) or 290 ± 10 °F (Method C).

METHOD A

PROCEDURE

4. (a) Dry the specimen to constant mass. Constant mass shall be defined as the mass at which further drying at 125 ± 5 °F does not alter the mass by more than 0.1 gram. Samples saturated with water shall initially be dried overnight at 125 ± 5 °F and then weighed at two-hour drying intervals. Recently molded laboratory samples, which have not been exposed to moisture, do not require drying.

(b) Cool the specimen to room temperature at 77 ± 9 °F and record the dry mass to the nearest 0.1 gram as "A".

(c) Immerse the specimen in water at 77 ± 2 °F for 4 ± 1 minutes and record the immersed mass to the nearest 0.1 gram as "C". Care shall be exercised to ensure that no trapped air bubbles exist under the specimen.

(d) Remove the specimen from the water, quickly damp dry the specimen surface by blotting with a damp towel, and as quickly as possible determine and record the surface-dry mass to the nearest 0.1 gram as "B". Any water that seeps from the specimen during the surface-dry weighing operation is considered as part of the specimen. The determination of the immersed mass and surface-dry mass of each specimen will be completed before the next specimen is submerged for its immersed mass determination.

NOTE: A terry cloth towel has been found to work well. Damp is considered to be when no water can be wrung from the towel.

NOTE: If desired, the sequence of testing operations may be changed to expedite the test results. For example, first the immersed mass, "C", can be taken, then the surface-dry mass, "B", and finally the dry mass, "A".

CALCULATION

5. (a) Calculate the bulk specific gravity of the specimen as follows:

$$\text{Bulk Specific Gravity} = \frac{A}{B - C}$$

Where: A = mass of dry specimen
B = mass of surface-dry specimen
C = mass of immersed specimen

(b) Calculate the bulk density of the specimen by multiplying the bulk specific gravity by 62.3 lbs/cu ft.

(c) For laboratory molded specimens of 1/2-inch or 3/4-inch bituminous mixes, the range of bulk density results for three replicate specimens shall not differ by more than 2.5 lbs/cu ft. For laboratory molded specimens of Base mixes, the range of bulk density results for three replicate specimens shall not differ by more than 3.0 lbs/cu ft. If this requirement is not met, the entire set of specimens shall be discarded and a new set of specimens shall be prepared and tested.

(d) Calculate the percent water absorbed by the specimen (on volume basis) as follows:

$$\text{Percent Water Absorption by Volume} = \frac{B - A}{B - C} \times 100$$

METHOD C (RAPID TEST)

PROCEDURE

6. (a) This procedure can be used for testing specimens which are not required to be saved and which contain a substantial amount of moisture. Specimens obtained by methods that introduce moisture, such as wet coring or sawing, can generally be tested the same day by this method.

(b) The testing procedure and calculations shall be the same as given for Method A, with the following exceptions:

1) The immersed mass "C" shall be determined first, then the surface-dry mass "B", and finally the dry mass "A".

2) The dry mass is determined as shown in paragraphs 6(c) and 6(d) below.

(c) Place the specimen in a large, flat-bottom drying pan of known weight. Place the pan and specimen in a 290 ± 10 °F oven. Leave the specimen in the oven until it can be easily separated to the point where particles of the fine aggregate portion are not larger than 1/4 inch. During separation of material, it shall be assured that no material is lost. Place the separated specimen in the 290 ± 10 °F oven and dry to constant mass. (Constant mass shall be determined as follows: Dry the sample for a minimum of 1 hour at 290 ± 10 °F. Record the weight of the sample to the nearest 0.1 gram. Continue drying and weighing until the weight does not change more than 0.1 gram at drying intervals of a minimum of 30 minutes.)

(d) Cool the pan and specimen to room temperature at 77 ± 9 °F. Weigh the pan and specimen, subtract the mass of the pan, and record the dry mass of the specimen to the nearest 0.1 gram as "A".

NOTE: For Method C, the drying of specimens to constant weight may be accomplished in a microwave oven, as described in Arizona Test Method 719.

REPORT

7. (a) The method that was used.

(b) The bulk specific gravity to the nearest 0.001.

(c) The bulk density to the nearest 0.1 lb/cu ft.

(d) The absorption to the nearest 0.01 percent.

PREPARING AND SPLITTING FIELD SAMPLES OF BITUMINOUS MIXTURES FOR TESTING

(An Arizona Method)

SCOPE

1. (a) This procedure describes the preparation and splitting of field samples of bituminous mixtures for testing.

(b) This test method may involve hazardous material, operations, or equipment. This test method does not purport to address all of the safety concerns associated with its use. It is the responsibility of whomever uses this test method to consult and establish appropriate safety and health practices and determine the applicability of regulatory limitations prior to use.

APPARATUS

2. Requirements for the frequency of equipment calibration and verification are found in Appendix A3 of the Materials Testing Manual. Apparatus shall consist of the following:

(a) A balance or scale capable of measuring the maximum weight to be determined and conforming to the requirements of AASHTO M 231, except the readability and sensitivity of any balance or scale utilized shall be at least 0.1 gram.

(b) Oven capable of maintaining a temperature of 290 ± 10 °F.

(c) Closed-end samplers as illustrated in **Figure 1** (or similiar), constructed of 16 to 18 gauge sheet metal, having a height of 3 inches, a minimum length of 13 inches, and widths of approximately 2-1/2 inches, 3 inches, or 3-1/2 inches.

(d) A concrete trowel or hand float. If desired, a straightedge of sufficient length to span the final diameter of the circular mass may be used.

(e) Small scoop, spatulas, and suitable size containers.

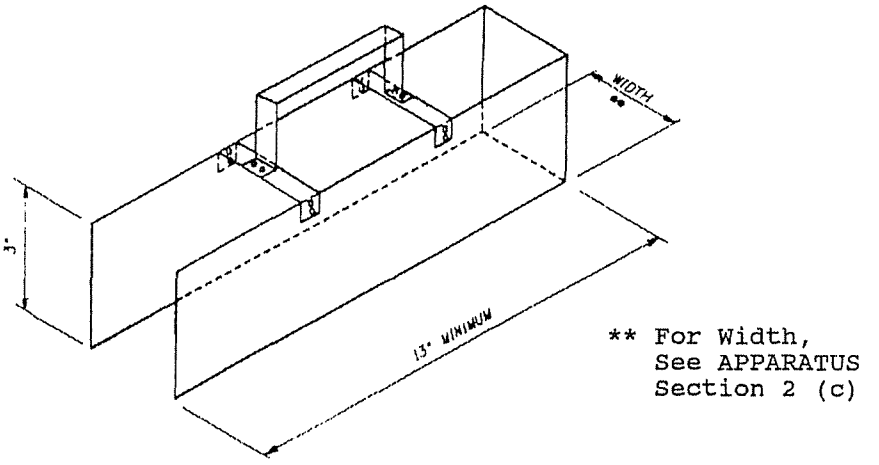

FIGURE 1

PREPARATION OF SAMPLE

3. (a) Samples may be stored for indefinite periods of time at temperatures not exceeding 140 °F.

(b) The material shall be easily workable and pliable when splitting. If necessary, the sample may be heated at 290 ± 10 °F for a maximum of 3 hours. The 3-hour time period begins when the oven reaches the specified temperature.

(c) If necessary, the material shall be reduced in size to provide a workable amount of material from which to obtain all required samples by thoroughly mixing and quartering, splitting with a mechanical (clam-shell) splitter, or using a four-way splitter such as a "Quartermaster". When utilizing a mechanical (clam-shell) splitter, the width of the individual chute openings shall be approximately 1-1/2 to 2-1/2 times larger than the largest particles in the sample to be split. Generally it will only be necessary to reduce the material one time by quartering or splitting. A light coat of vegetable cooking spray may be sprayed on the equipment to help shed the asphaltic concrete. In no case shall diesel fuel or similar solvent be used. Individual samples for testing shall not be obtained by quartering or splitting, but rather as described in Section 4.

(d) Place the hot material on a tarp or a sheet of heavy paper large enough to manipulate the sample. In a rolling motion thoroughly mix the material. Leave the mound in a circular shape after rolling is completed.

(e) Spread the material into a circular mass. Spreading may be accomplished either by leveling the mound of material with a concrete trowel or hand

float; or by placing a straightedge of sufficient length to span the final diameter of the circular mass over the center of the material and rotating it until the desired height is obtained. Whichever method is utilized, the operator shall assure that the material is evenly distributed with as little segregation as possible. The thickness of the circular mass shall not exceed 3 inches. Generally a depth of 1-1/2 to 2 inches will provide acceptable size samples.

(f) At any time during obtaining test samples, the material may be reheated for a maximum of 1 hour at a temperature not exceeding 300 °F to restore pliability.

OBTAINING TEST SAMPLES

4. (a) The required samples for testing, with the exception of moisture content, shall be obtained as described in paragraphs (b) through (f) below. For obtaining test samples for moisture content, see paragraph (g) below. **The samples may be obtained in any sequence as long as the sample for moisture content is taken immediately before or after the sample for determination of asphalt content.** The width of sampler to be used is dependent upon the size of aggregate in the sample and/or the amount of material needed.

(b) The samples shall be obtained by placing the closed end of the sampler as near the center of the mass as possible with the open end of the sampler extending beyond the edge of the circular mass (**see Figure 2**). Force the sampler down to the bottom of the pile and remove the contents that are captured by sliding the sampler out of the pile, and placing the contents into a tared container.

(c) Obtain additional material, as necessary, by repeating the procedure in paragraph (b), at a different location in the pile so that a cut does not overlap a previous cut (**see Figure 3**).

(d) If small amounts of material are needed, slide the sampler out and to the side of the pile. Lift the sampler up and turn it perpendicular to the material. Force the sampler down through the full width of the material, starting at the closed end portion of the material. (**Figure 4** provides an illustration of this procedure.) If necessary, additional material may be obtained by taking multiple cuts. Utilize the entire portion(s) taken and do not attempt to obtain an exact weight.

(e) If excess material is obtained, the sample shall be returned to a place not disturbing the rest of the circular mass. If the remaining mass is large enough, and is undisturbed, obtain another sample for the test, if necessary utilizing a smaller width sampler. Alternatively, the sample may be returned to the circular mass and the material re-rolled and spread to a thinner depth.

(f) If the remaining mass is not large or uniform enough to obtain required samples, re-roll and spread the material in the same manner described in section 3 (e).

(g) Test samples for determining moisture content may be obtained by use of the sampler as described in paragraps (b) through (f) above, or by taking several small portions with a small scoop at random locations throughout the mass.

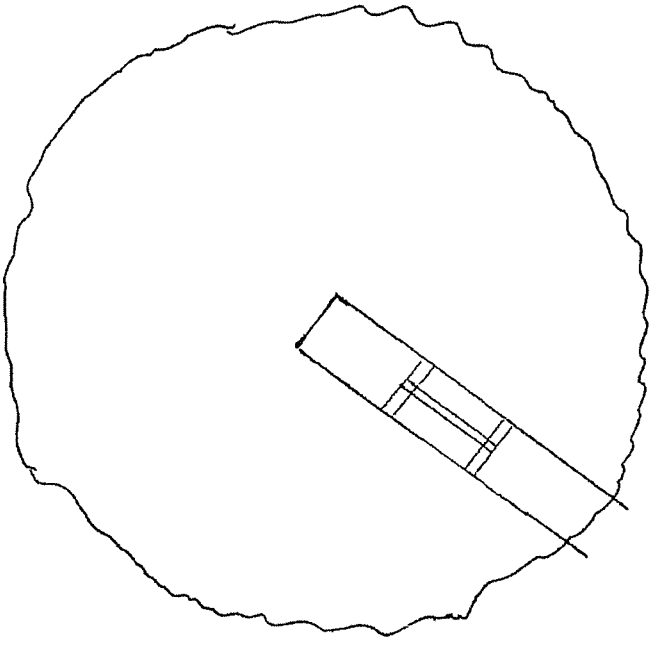

FIGURE 2

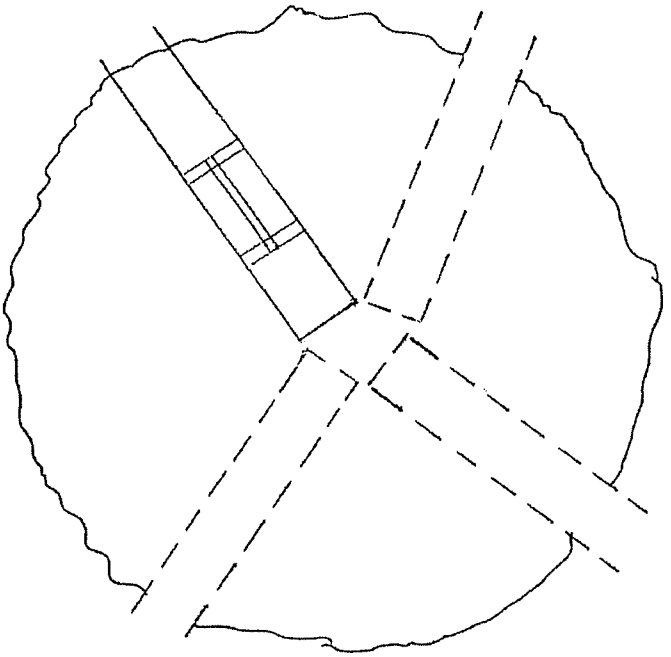

FIGURE 3

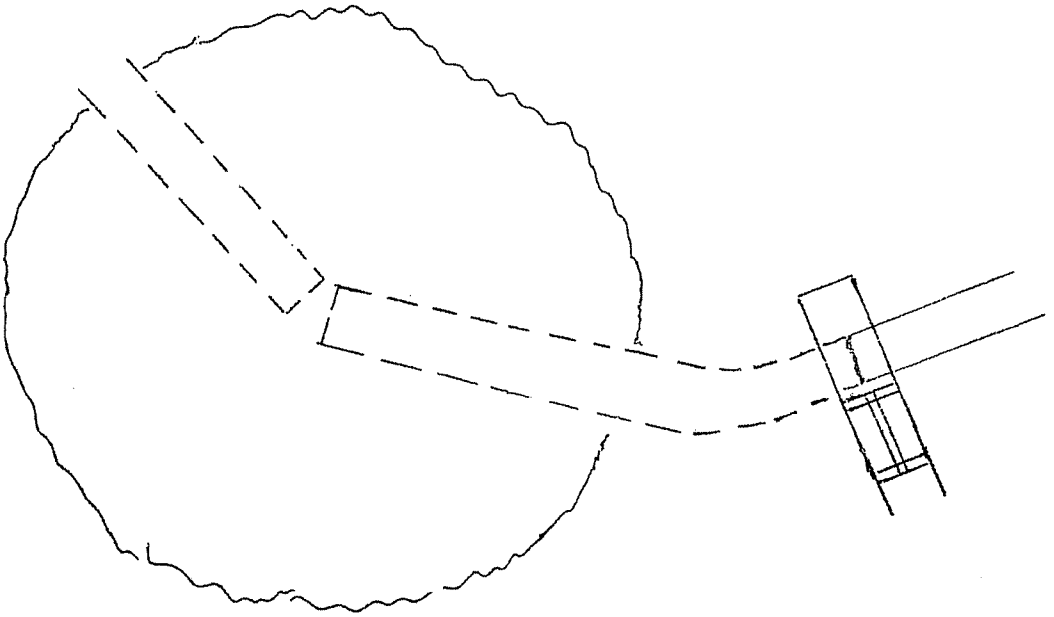

FIGURE 4

MAXIMUM THEORETICAL SPECIFIC GRAVITY OF FIELD PRODUCED BITUMINOUS MIXTURES (RICE TEST)

(A Modification of AASHTO T 209)

SCOPE

1. This method of test is intended for determining the maximum specific gravity of uncompacted bituminous mixtures which have been field produced.

NOTE: Two methods are provided for determining the maximum specific gravity. The method given in Section 6 is for determining results without fan drying the samples. Section 7 describes the procedure which is used when fan drying is necessary. For the first three samples taken at the beginning of production on a project the maximum specific gravity shall be determined in accordance with Section 6 and also shall be fan dried and maximum specific gravity determined in accordance with Section 7. If the difference in resultant air voids, when determined as described in ARIZ 416, Section 9 is greater than 0.2% subsequent samples will be subjected to fan drying. During the course of the project comparisons should be made on approximate 10 sample intervals to determine need for fan drying. In case of dispute, fan drying shall be used.

APPARATUS

2. The apparatus shall consist of the following:

(a) Balance - A balance accurate to 0.1 gram at the maximum weight to be determined.

(b) Container - A heavy walled Erlenmeyer flask having a capacity of at least 1500 ml. strong enough to withstand a partial vacuum; the cover shall consist of a rubber stopper with a tight hose connection. A small piece of No. 200 wire mesh covering the hose opening shall be used to minimize the possibility of loss of fine material.

NOTE: If a procedure which subjects multiple flasks to a vacuum simultaneously is used, the vacuum gauge shall be placed beyond the last bottle to insure that all the bottles are being subjected to the same amount of vacuum.

(c) Glass cover plate large enough to cover mouth of the flask.

(d) Vacuum pump for evacuating air from the container.

(e) Distilled Water - All water used in this procedure shall be distilled water.

CALIBRATION OF FLASK

3. Calibrate the flask by accurately determining the weight of water at 77° ± 1°F required to fill it completely. Use of a glass cover plate is required to ensure accurate filling. Record the weight of the flask + water to the nearest 0.1 gram as "B".

PREPARATION OF SAMPLES

4. (a) Obtain 3 representative 1050 ± 50 gram samples of the material, as described in ARIZ 416.

NOTE: If necessary, heat the sample a maximum of one hour at a maximum temperature of 285°F ONLY until it is pliable enough to allow separation of the coated aggregate.

(b) Spread each sample on a sheet of heavy paper or in a large flat bottom pan. Before the samples are completely cooled separate the particles of the mixture, taking care not to fracture the mineral particles, so that the particles of the fine aggregate portion are not larger than 1/4 inch. Allow the samples to cool to room temperature.

PROCEDURE

5. For each sample the procedure below shall be followed:

(a) Place the sample in the flask and determine weight of sample to the nearest 0.1 gram. This is designated as the "weight of sample in air", or "Wmm".

(b) Add sufficient water, which has been treated with a wetting agent, to cover the sample.

NOTE: A suitable wetting agent such as Aerosol OT in a concentration of 0.01%, or one ml. of 10% solution per 1000 ml. of water, shall be used to facilitate the release of entrapped air.

(c) Remove entrapped air by subjecting the contents of the flask to a partial vacuum, with a minimum of 20 inches mercury for 15 ± 2 minutes. Agitate the contents three or four times within this period, to dislodge trapped air bubbles.

CAUTION: Do not agitate the sample too frequently or vigorously; this can cause stripping of the asphalt film from some particles, resulting in erroneous specific gravities.

(d) After the evacuation period, fill the flask completely with water, slide a preweighed glass cover plate over the mouth of the flask, and weigh immediately to the nearest 0.1 gram. The temperature of the flask, water, and sample shall be between 72°F and 80°F. Record as the weight of the "flask + water + sample", or "C".

CALCULATIONS

6. (a) The Volume of Voidless Mix, "Vvm", in ml. is determined for each sample by the following:

$$Vvm = Wmm + B - C$$

Where: Wmm = Wt. of Sample in Air
B = Wt. of Flask + Water
C = Wt. of Flask + Water + Sample

(b) The Maximum Specific Gravity, "Gmm", is determined for each sample by the following:

$$Gmm = \frac{Wmm}{Vvm}$$

(c) Compare the three individual values for maximum specific gravity. If the range of the three is within 0.024, all are used to determine the average maximum specific gravity as shown in paragraph (d) below. If the range is greater than 0.024, the average of two may be used if they are within a range of 0.012. If values are not achieved within the above criteria, the samples shall be discarded and a set of three new samples shall be tested. If material is not available results should be used cautiously in the analysis of the bituminous mix. If results are used for specification compliance, additional material must be obtained for retesting.

(d) The average maximum specific gravity of the bituminous mix is determined for the samples with acceptable maximum specific gravity values, and recorded to the nearest 0.001 unit.

(e) To determine the maximum density, the average maximum specific gravity is multiplied by 62.3 lbs/cu ft.

PROCEDURE FOR FAN DRYING SAMPLES

7. (a) The entire contents of the flask shall be poured into a nest of sieves consisting of a No. 40 and a No. 200 screen.

NOTE: If stripping has occurred as evidenced by discoloration of water in the flask, significant loss of Minus No. 200 material may be expected. Provisions for the recovery and addition of this material to the Plus No. 200 material shall be made.

(b) Allow mix to drain through the sieves until excessive moisture is removed from mix. Spread the material retained on the No. 40 and No. 200 sieves in a pan and place before an electric fan to remove surface moisture. The air through the fan shall be at room temperature and no heat shall be used to dry the mix.

(c) After evaporation of excess moisture is observed, weigh mix at 15 minutes intervals and when the weight loss is less than 0.5 gram for this interval the mix is considered to be surface dry. Record the surface dry weight as "Wsd". Intermittent stirring of the sample is required during the drying period. Conglomerations of mix shall be broken by hand. Care must be taken to prevent loss of particles of mixture.

NOTE: If the "Wsd" weight for any of the three samples is less than its corresponding "Wmm" weight, the samples shall be discarded and a set of three new samples shall be tested. If material is not available, the maximum specific gravity shall be determined utilizing the "Wmm" weight and results should be used cautiously in the analysis of the bituminous mix. If results are used for specification compliance, additional material must be obtained for retesting.

(d) To calculate the Vvm and maximum specific gravity, Gmm, of each sample, the surface dry weight, Wsd, is substituted for "Wmm" only in the equation given for Vvm in paragraph 6 (a).

EXAMPLE

8. Examples of the calculations are shown in Figures 1 and 2.

ARIZONA 417

LAB. NO.: 88-23456 DATE: 2-18-88

PROJECT NO: F-111-1(1) MATERIAL TYPE: 3/4" A.C.

PROJECT NAME: BIG GULCH - BUG MOUNTAIN

TESTED BY: JOE TESTER CHECKED BY: S.C.

If samples were fan dried, the maximum density is determined utilizing the "Wsd" weight as below:

FLASK NUMBER	WEIGHT OF FLASK	"Wmm" WEIGHT OF SAMPLE IN AIR	"B" FLASK + WATER	"C" FLASK + WATER + SAMPLE	"Vvm" VOLUME OF VOIDLESS MIX Wmm+B-C	"Gmm" MAXIMUM SPECIFIC GRAVITY Wmm / Vvm	MAXIMUM DENSITY LBS. PER CU. FT. 62.3 x Gmm	"Wsd" SURFACE DRY WEIGHT	"Vvm" VOLUME OF VOIDLESS MIX Wsd+B-C	"Gmm" MAXIMUM SPECIFIC GRAVITY Wmm / Vvm	MAXIMUM DENSITY LBS. PER CU. FT. 62.3 x Gmm
2	1029.8	1029.7	3301.2	3919.2	411.7	2.501		–	–	–	
~~3~~	~~992.7~~	~~1062.6~~	~~3286.2~~	~~3929.1~~	~~419.7~~	~~2.532~~		~~–~~	~~–~~	~~–~~	
4	1178.1	1064.0	3431.9	4071.1	424.8	2.505		–	–	–	
AVERAGE						2.503	155.9			–	–

FLASK NUMBER:	2	3	4
WT. OF SAMPLE AND FLASK	2059.5	2055.3	2242.1
WT. OF SAMPLE, FLASK, WATER AND GLASS PLATE	4074.3	4084.2	4226.2
WT. OF GLASS PLATE	155.1	155.1	155.1

REMARKS: FLASK #3 ELIMINATED FROM THE AVERAGE DUE TO SPECIFIC GRAVITY BEING OUTSIDE SPECIFIED 0.024 ALLOWABLE RANGE.

FIGURE 1

ARIZONA 417

LAB. NO.: 88-2468 DATE: 2-16-88

PROJECT NO: F-888-8(8) MATERIAL TYPE: 1/2" A.C.

PROJECT NAME: RED ROAD - FISH LAKE

TESTED BY: JOE TESTER CHECKED BY: S.C.

If samples were fan dried, the maximum density is determined utilizing the "Wsd" weight as below:

FLASK NUMBER	WEIGHT OF FLASK	"Wmm" WEIGHT OF SAMPLE IN AIR	"B" FLASK + WATER	"C" FLASK + WATER + SAMPLE	"Vvm" VOLUME OF VOIDLESS MIX Wmm+B-C	"Gmm" MAXIMUM SPECIFIC GRAVITY Wmm / Vvm	MAXIMUM DENSITY LBS. PER CU. FT. 62.3 x Gmm	"Wsd" SURFACE DRY WEIGHT	"Vvm" VOLUME OF VOIDLESS MIX Wsd+B-C	"Gmm" MAXIMUM SPECIFIC GRAVITY Wmm / Vvm	MAXIMUM DENSITY LBS. PER CU. FT. 62.3 x Gmm
1	1184.3	1073.1	3430.2	4071.2	—	—		1073.7	432.7	2.480	
2	1028.9	1093.3	3323.0	3975.7	—	—		1094.0	441.3	2.477	
3	992.4	1090.1	3286.0	3940.6	—	—		1090.7	436.1	2.500	
AVERAGE						—	—			2.486	154.9

FLASK NUMBER:	1	2	3
WT. OF SAMPLE AND FLASK	2257.4	2122.2	2082.5
WT. OF SAMPLE, FLASK, WATER AND GLASS PLATE	4216.4	4120.9	4085.8
WT. OF GLASS PLATE	145.2	145.2	145.2

REMARKS:

FIGURE 2

BITUMINOUS MATERIAL CONTENT OF ASPHALTIC CONCRETE MIXTURES BY THE NUCLEAR METHOD

(An Arizona Method)

SCOPE

1. (a) This procedure describes a method for determining the percent bituminous material content of asphaltic concrete mixtures, by testing a sample with a device that utilizes neutron thermalization techniques.

(b) Modifications to this procedure for Asphaltic Concrete Friction Course, Asphaltic Concrete (Asphalt-Rubber), and Asphaltic Concrete Friction Course (Asphalt-Rubber) are given in Section 7.

(c) This test method involves hazardous material, operations, and equipment. This test method does not purport to address all of the safety concerns associated with its use. It is the responsibility of the user to consult and establish appropriate safety and health practices and determine the applicability of regulatory limitations prior to use.

(d) Safety procedures for operation, transport, and storage of nuclear gauges shall be in accordance with the manufacturer's recommendations and the applicable regulations of the Arizona Radiation Regulatory Agency (ARRA).

(e) If recommended by the manufacturer, equipment operators should wear an approved form of radiation dosimetry film badge capable of monitoring the occupational radiation exposure.

(f) See Appendix A1 of the Materials Testing Manual for information regarding the procedure to be used for rounding numbers to the required degree of accuracy.

(g) Metric (SI) units and values are shown in this test method with English units and values following in parentheses. Values given for metric and English units may be numerically equivalent (soft converted) for the associated units, or they may be given as rounded or rationalized values (hard converted). Either the metric or English units along with their corresponding values shall be used in accordance with

applicable specifications. See Appendix A2 of the Materials Testing Manual for additional information on the metric system.

APPARATUS

2. Requirements for the frequency of equipment calibration and verification are found in Appendix A3 of the Materials Testing Manual. Apparatus for this test procedure shall consist of the following:

(a) Nuclear asphalt content gauge and manufacturer's instruction manual. While exact details of the manufacture of the apparatus may vary, the system shall consist of the following items and meet the criteria for variability given below. The equipment shall be so constructed as to be licensable in accordance with applicable health and safety regulations.

1) Neutron Source - An encapsulated and sealed radioactive source such as "Americium-241: Beryllium", or "Californium-252".

2) Detectors - Any type of thermal neutron detector, such as helium-3 or boron tri-floride.

3) Read-Out Instrument, such as a scaler or a direct-reading digital device calibrated in percent asphalt cement.

4) A minimum of four standard stainless steel sample pans [approximately 230 mm long by 185 mm wide by 100 mm deep (9" x 7-1/4" x 4")].

5) The variability of the gauge shall be no greater than ± 0.05 percent asphalt for a four-minute count. The variability shall be determined utilizing a three point calibration for a conventional asphaltic concrete mix with a design asphalt content of approximately five percent. The variability of the gauge is determined from the slope of the calibration curve and the standard deviation of the measured counts of the calibration sample at the mix design percent asphalt. If the gauge fails to meet the variability requirement shown above for a four-minute count, the variability may be determined utilizing either 8-minute or 16-minute counts as necessary. If the variability is determined using an increased count time, that count time is the minimum that is to be used for testing subsequent field samples [See paragraphs 6(g) and 6(i)]. In lieu of an increased count time, a new set of calibration samples may be prepared and tested with greater care. If the gauge fails to meet the variability requirement after increased count times or preparation of additional calibration samples, the gauge must be returned to the manufacturer for necessary repair and recalibration. Variability is

calculated as shown below. The variablity of the gauge should be checked at minimum 12 month intervals. Documentation of the variability determination shall be kept on file.

$$V = \frac{S.D.}{S}$$

Where: V = apparatus variability, in percent asphalt.
S = slope of the calibration curve, in counts (y-axis) per percent asphalt cement (x-axis). [See note below.]
S.D. = standard deviation, in counts. The standard deviation is calculated from 20 individual four-minute readings (8-minute or 16-minute counts if used) taken on the calibration sample at the mix design percent asphalt content.

NOTE: The slope of the calibration curve, as calculated and given by the gauge may <u>not</u> be the actual numerical value for the slope, and in addition, the slope may <u>not</u> be given in counts (y-axis) per percent asphalt (x-axis). For instance, the Troxler Nuclear Asphalt Content Gauge (Model 3241-C) gives a numerical value for slope which is actually 1000 times the actual slope, and in addition, the value given by the Troxler gauge is given for percent asphalt (y-axis) per counts (x-axis). The following is an example of the slope of the calibration curve as given by the Troxler gauge and the determination of the corrected slope value to be used in the Apparatus Variability equation given above:

Troxler gauge reported slope = 5.220075
[Slope based on percent asphalt (y-axis) per counts (x-axis).]

Determination of corrected slope:

$$\frac{5.220075}{1000} =$$

0.005220075 (percent asphalt/counts)

Reciprocal of slope to obtain slope based on counts (y-axis) per percent asphalt (x-axis):

$$\frac{1}{0.005220075} =$$

191.568 (counts/percent asphalt)

In this case, the value of 191.568 is the slope of the calibration curve and is the value which is to be used for "S" in the equation for Apparatus Variability given above.

(b) Scale(s) or balance(s) capable of measuring the maximum weight to be determined and conforming to the requirements of AASHTO M 231, except the readability and sensitivity of any balance or scale utilized shall be as shown below:

1) The scale or balance to be used for preparing calibration samples shall have a readability and sensitivity of at least 1 gram.

2) The scale or balance to be used for testing field samples shall have a readability and sensitivity of at least 5 grams.

(c) Oven(s), capable of heating and maintaining temperatures to 177 °C (350 °F). Two ovens may be required.

(d) Steel straightedge, approximately 300 mm (12 inches) in length.

(e) Either a piece of plywood of at least 20 mm (3/4 inch) nominal thickness, or a metal plate of at least 6 mm (1/4 inch) nominal thickness, having an area slightly larger than the top of the sample pans.

(f) Mixing apparatus - Mechanical mixing is recommended; 19 liter (20 quart) capacity mixer is required. (Hand mixing may be performed if desired.)

(g) Miscellaneous pans, bowls, spoons, and spatulas.

(h) Thermometer with temperature range 10 to 260 °C (50 to 500 °F).

(i) Hot plate(s) capable of heating and maintaining temperatures to 177 °C (350 °F).

(j) Flat bottom metal scoop at least 50 mm wide by 150 mm long (2 inches x 6 inches).

PRECAUTIONS

3. (a) Since nuclear equipment measures the total amount of hydrogen in the sample, this procedure is sensitive to changes in moisture content. It must be remembered that both bituminous material and water contain hydrogen.

(b) Keep any other source of neutron radiation at least 10 meters (30 feet) from the equipment.

(c) Do not place the equipment where the amount of hydrogenous material may change during the calibration or testing procedures. Hydrogenous materials are those containing hydrogen, for example, water or plastic materials.

(d) Moving the gauge to a new location may have an effect on the results. Therefore, a new background count and/or calibration is required if the gauge is moved. If the original calibration specimens are retested, they shall be heated in an oven at 121 to 149 °C (250 to 300 °F) for at least one hour to drive out any condensation or absorbed moisture and to bring them to testing temperature.

SAMPLING

4. (a) For preparing calibration samples, aggregate samples are obtained in accordance with Arizona Test Method 105. Samples shall be adequately dried, if necessary, to a free-flowing condition in the portion passing the 4.75 mm (No. 4) sieve. A maximum of approximately 45 kg (100 pounds) of aggregate, representative of the mix design gradation, will normally be required.

(b) When testing field samples of Asphaltic Concrete, a sample of the freshly produced mix is obtained in accordance with Arizona Test Method 104.

CALIBRATION

5. (a) A calibration must be performed for each asphaltic concrete mixture that is to be used on the project. Test results on asphaltic concrete mixtures may vary with changes in the type and gradation of aggregate, (percentage and source of

mineral admixture, if used), and percentage and source of bituminous material. Accordingly, a calibration curve must be developed for each mix design. The calibration curve shall be established with three or more points. The calibration procedure consists of preparing and testing one dry aggregate blank sample, and a minimum of three asphaltic concrete calibration samples at varying bituminous material contents.

(b) Before a calibration is performed, a 16-minute background count shall be taken and recorded.

(c) For the dry aggregate blank sample, weigh up one approximate 10 kg (22 pound) aggregate sample representative of the mix design aggregate gradation. Thoroughly blend the aggregate and dry to constant weight at 121 to 149 °C (250 to 300 °F), and then place in a tared sample pan in at least two approximately equal depth layers. After placing each layer in the pan, gently spade the aggregate with the scoop or wide blade-like tool. The coarse and fine material shall be uniformly distributed. Too much manipulation of the material can result in segregation of the material, causing the fines to migrate to the bottom. Fill the pan slightly above the top rim. Place the straightedge firmly across the rim and, using a sawing motion, strike off the surface of the sample so that it is flush with the rim. Gaps between the straightedge and the sample shall be filled with fine aggregate and the sample leveled. Do not further compact the sample. Determine and record the weight of the dry aggregate blank sample to the nearest 5 grams.

(d) Place the dry aggregate blank sample in an oven at 121 to 149 °C (250 to 300 °F). A count will be determined on this sample, as described in paragraph 5(l), at the completion of the testing of the asphaltic concrete calibration samples.

(e) For the asphaltic concrete calibration samples, weigh up a minimum of three aggregate samples representative of the mix design aggregate gradation. These aggregate samples shall weigh at least 500 grams more than the dry aggregate blank sample weight determined in paragraph 5(c). If mineral admixture is used, the appropriate type and amount shall be added to the aggregate and thoroughly blended. Dry the samples to constant weight at the mixing temperature required as shown in paragraph (g) below.

(f) Bituminous material of the same source, grade, and type as that which will be used in production of the asphalt concrete mixture shall be used in the calibration samples. Normally three samples are prepared; one at the design bituminous material content, one at 1.0% above, and one at 1.0% below. The percent of bituminous material is based on the weight of total mix. The weight of bituminous material to be added for each percent of bituminous material is determined by the following:

$$\begin{bmatrix}\text{Weight of}\\ \text{Bituminous}\\ \text{Material}\end{bmatrix} = \frac{\begin{bmatrix}\text{Weight of Aggregate}\\ \text{(and mineral admixture when used)}\end{bmatrix}}{100 - \begin{bmatrix}\text{Percent of}\\ \text{Bituminous}\\ \text{Material}\end{bmatrix}} \times \begin{bmatrix}\text{Percent of}\\ \text{Bituminous}\\ \text{Material}\end{bmatrix}$$

(g) All bowls, sample pans, and mixing tools shall be heated to approximately 149 °C (300 °F). It is recommended that a "butter mix" be utilized to condition the mixing equipment. If a "butter mix" is utilized, the mixing equipment shall be scraped consistently clean with a spatula after each batch. As an alternate to a "butter mix", the mixing equipment shall be scraped as clean as possible with a spatula after each batch. All samples shall be mixed at the same mixing temperature, ± 6 °C (10 °F). During mixing, a hot plate shall be placed under the mixing bowl to reduce loss of heat while mixing. The sample shall be sufficiently mixed to ensure thorough coating. Unless otherwise indicated on the mix design, the temperature of the bituminous material and aggregate (and mineral admixture when used) at the time mixing begins shall be in accordance with the following:

BITUMINOUS MATERIAL	TEMPERATURE RANGE
AC 10, AC-20	149 ± 6 °C (300 ± 10 °F)
AC-30, AC-40	152 ± 6 °C (305 ± 10 °F)
PG 58-XX, PG 64-XX	149 ± 6 °C (300 ± 10 °F)
PG 70-XX, PG 76-XX	152 ± 6 °C (305 ± 10 °F)
Polymer Modified Asphalt	160 ± 6 °C (320 ± 10 °F)
Asphalt-Rubber	163 ± 6 °C (325 ± 10 °F)

(h) At the time of beginning the fabrication of each asphaltic concrete calibration sample, the mixture shall be 121 to 149 °C (250 to 300 °F). The mix with the lowest bituminous material content shall be prepared first. Fill the tared sample pan in approximately equal depth layers (two layers minimum), uniformly distributing the sample in the pan. After placing each layer in the pan, gently spade the mix with a spatula, wide blade-like tool, or scoop and lightly press the mix down. Add mix until the top of the material is mounded approximately 25 to 38 mm (1 to 1-1/2 inches) above the top of the pan. Using a spatula or trowel, round the top of the mixture so that it is at the interior edges of the pan but not on the top rim of the pan. Use the metal plate or plywood to consolidate the asphaltic concrete mixture. If necessary, this can be done by placing the pan on a clean floor, placing the metal plate or plywood on top of the sample pan and standing on the plate. If desired, a piece of waxed paper or other suitable material may be placed on the top of the mix to avoid sticking. If necessary, fill any voids and consolidate the mix with the metal plate of plywood until the pan is

completely full and the mix is even with the top of the pan. Determine and record the weight of this asphaltic concrete calibration sample to the nearest gram. This weight is identified as the asphaltic concrete calibration sample weight and is used (± 5 grams) for the remaining calibration samples.

(i) Place the sample in the gauge and take a 16-minute count. Record the measured count.

(j) Repeat steps in paragraphs 5(h) and 5(i) to fabricate and test the remaining calibration samples. These samples shall be fabricated in the same manner as the first calibration sample and shall be within ± 5 grams of the asphaltic concrete calibration sample weight. If samples are not able to be tested immediately after fabrication, they shall be placed in an oven at 121 to 149 °C (250 to 300 °F) until they can be tested.

(k) Prepare a calibration curve in accordance with the manufacturer's calibration instructions. On some gauges this curve may be generated internal to the gauge. To be considered acceptable, a calibration curve should have a correlation coefficient greater than or equal to 0.995.

$$\text{Correlation Coefficient} = \sqrt{1 - \frac{\Sigma\,(y - y')^2}{\Sigma\,(y - \bar{y})^2}}$$

Where: y = Actual percent bituminous material value for each sample.
y' = Calculated percent bituminous material value for each sample, from curve.
$\bar{y}$ = Mean of the actual percent bituminous material values for all samples.

(l) Remove the dry aggregate blank sample from the oven. Place in the gauge take a minimum four-minute count. This count is recorded and may be used to determine if significant changes occur in the aggregate during asphaltic concrete production. [See paragraph 6(i).]

(m) Once a calibration has been performed for the asphaltic concrete mixture, other gauges from the same manufacturer may use a cross calibration for testing of the same asphaltic concrete mixture. Cross calibrations shall be performed in accordance with the gauge manufacturer's recommendations, and shall have been done within the preceding 12 months. In cases of dispute, the gauge derived calibration shall be the referee method. A new cross calibration is required after any gauge repair.

PROCEDURE (FIELD TEST SAMPLE)

6. (a) A 16-minute background count shall be taken and recorded each day before any test samples are run.

(b) Obtain a representative sample for determining the bituminous material content. Generally 8 kg (18 pounds) should be adequate.

(c) If desired, the entire sample for determining the bituminous material content may be dried to constant weight in an oven at 143 ± 6 °C (290 ± 10 °F) in lieu of obtaining a moisture content sample as described in paragraph (d) or (h) below. If a moisture sample is obtained, the percent moisture is determined in accordance with Arizona Test Method 406. The percent moisture is subtracted from the gauge percent bituminous material to obtain the corrected (actual) percent bituminous material.

(d) If the entire sample for determining the bituminous material content has <u>not</u> been dried to constant weight as described in paragraph (c) above, or the moisture content sample is <u>not</u> to be taken at the completion of testing of the bituminous material content sample as described in paragraph (h) below, a moisture content sample is taken immediately after the fabrication of the bituminous material content test sample as described in paragraph (e) below.

(e) If the field sample is at fabrication temperature at the time of obtaining the bituminous material content test sample, the bituminous material content test sample is fabricated immediately. If the field sample is <u>not</u> at fabrication temperature, enough material for both the bituminous material content test sample, and a moisture content sample when necessary, shall be obtained and placed in a single pan and brought to fabrication temperature.

(f) At the time of beginning the fabrication of the bituminous material test sample, the mixture shall be at a temperature of 121 to 149 °C (250 to 300 °F). Fill the tared sample pan in approximately equal depth layers, using the same number of layers as was used in fabrication of the calibration samples. Uniformly distribute each layer of the sample in the pan. After placing each layer in the pan, gently spade the mix with a spatula, wide blade-like tool, or scoop and lightly press the mix down. When the pan is nearly full, weigh the sample. Add enough mix until the sample weight is within ± 10 grams of the asphaltic concrete calibration sample weight as determined in paragraph 5(h). If necessary, the mix may be pressed down using the metal plate or plywood during addition of material. Using a spatula or trowel, round the top of the mixture so that it is at the interior edges of the pan but not on the top rim of the pan. Use the metal plate or plywood to consolidate the asphaltic concrete mixture until it is even with the top rim of the pan. If necessary, this can be done by placing the pan on a

clean floor, placing the metal plate or plywood on top of the sample pan and standing on the plate. If desired, a piece of waxed paper or other suitable material may be placed on the top of the mix to avoid sticking. Reweigh the sample, and assure the weight is within ± 10 grams of the asphaltic concrete calibration sample weight. Record the weight of the test sample to at least the nearest 5 grams.

(g) Immediately after fabrication place the sample in the gauge. Take and record a minimum four-minute count, and determine the gauge percent bituminous material. If an increased count time (8-minute or 16-minute) was used to determine the variability of the gauge [paragraph 2(a)(5)], that count time is the minimum that is to be used.

(h) If the bituminous material content sample has not been dried to constant weight prior to testing, or if the moisture content sample has not been taken at the time of fabrication of the bituminous material content test sample, a representative 1000 ± 50 gram moisture content sample shall be immediately taken from the bituminous material content test sample upon determination of the bituminous material percent in the gauge.

NOTE: Generally the samples taken for bituminous material content and moisture content are obtained from a larger field sample from which material for other tests, e.g., Marshall and Rice is also split out. In case there is a need for additional testing, it may be desirable to save material from the bituminous material content test sample along with excess material from the field sample.

(i) If desired during asphaltic concrete production, a dry aggregate blank sample may be prepared and tested to ensure that changes in aggregate do not occur unnoticed. Testing may be performed at any time that a change in the aggregate is suspected. This sample shall be dried to constant weight and fabricated in the manner described in paragraph 5(c). The weight of this sample shall be within ± 10 grams of the weight of the dry aggregate blank sample as determined in paragraph 5(c). Place sample in the gauge and take and record a minimum four-minute count. If an increased count time (8-minute or 16-minute) was used to determine the variability of the gauge [paragraph 2(a)(5)], that count time is the minimum that is to be used. If a significant change is noted in this count [greater than ± 1.0% of the calibration blank count determined in paragraph 5(l)], a new calibration may be warranted. The project supervisor should be notified immediately of a possible change in aggregate, pit conditions, and/or moisture retained in the aggregate.

MODIFICATIONS FOR ASPHALTIC CONCRETE FRICTION COURSE, ASPHALTIC CONCRETE (ASPHALT-RUBBER), AND ASPHALTIC CONCRETE FRICTION COURSE (ASPHALT-RUBBER)

7. The following modifications apply for Asphaltic Concrete Friction Course, Asphaltic Concrete (Asphalt-Rubber), and Asphaltic Concrete Friction Course (Asphalt-Rubber).

(a) In paragraph 3(d), the last sentence is changed to read: If the original calibration specimens are retested, they shall be heated in an oven at 104 ± 11 °C (220 ± 20 °F) for Asphaltic Concrete Friction Course, or at 149 ± 14 °C (300 ± 25 °F) for Asphaltic Concrete (Asphalt-Rubber) or Asphaltic Concrete Friction Course (Asphalt-Rubber), for at least one hour to drive out any condensation or absorbed moisture and to bring them to testing temperature.

(b) In the calbration procedure given in Section 5, the following changes are made:

1) In paragraph 5(g), a "butter mix" shall be used for preparing calibration samples.

2) In paragraph 5(h):

a) At the time of beginning the fabrication of calibration samples for Asphaltic Concrete Friction Course, the temperature of the mixture shall be 104 ± 11 °C (220 ± 20 °F).

b) At the time of beginning the fabrication of calibration samples for Asphaltic Concrete (Asphalt-Rubber) or Asphaltic Concrete Friction Course (Asphalt-Rubber), the temperature of the mixture shall be 149 ± 14 °C (300 ± 25 °F).

c) For Asphaltic Concrete Friction Course or Asphaltic Concrete Friction Course (Asphalt-Rubber), instead of adding mix until the top of the material is mounded approximately 25 to 38 mm (1 to 1-1/2 inches) above the top of the pan, mix shall be added so that the top of the mix is mounded slightly above the top of the pan.

3) In paragraph 5(j), the last sentence is changed to read: If samples are not able to be tested immediately after fabrication, they shall be placed in an oven at 104 ± 11 °C (220 ± 20 °F) for Asphaltic Concrete Friction Course, or at 149 ± 14 °C (300 ± 25 °F), for Asphaltic Concrete (Asphalt-Rubber) or Asphaltic Concrete Friction Course (Asphalt-Rubber).

(c) Paragraph 4 (b) is changed to read: When sampling Asphaltic Concrete Friction Course or Asphaltic Concrete Friction Course (Asphalt-Rubber), an adequate amount of material shall be taken from the truck at the mixing plant and placed into a 19 liter (5 gallon) bucket, or other suitable container, which has been conditioned with a "butter mix". The sample shall be taken at random locations, approximately 300 mm (12 inches) below the surface, within 5 minutes from the time the loading of the truck is completed. Representative samples of Asphaltic Concrete (Asphalt-Rubber) may be obtained either from the truck at the mixing plant, the windrow, or in accordance with Arizona Test Method 104.

(d) In the procedure for testing field samples (Section 6), the following changes are made:

1) At the beginning of the fabrication of field samples of Asphaltic Concrete Friction Course, the temperature of the mixture shall be 104 ± 11 °C (220 ± 20 °F).

2) At the beginning of the fabrication of field samples of Asphaltic Concrete (Asphalt-Rubber) or Asphaltic Concrete Friction Course (Asphalt-Rubber), the temperature of the mixture shall be 149 ± 14 °C (300 ± 25 °F).

CALIBRATION REPORT

8. The calibration report shall contain, as a minimum, the following information:

(a) Make, model, and serial number of the asphalt content gauge.

(b) ADOT project number.

(c) Type of mix.

(d) Calibration number.

(e) Name of test operator.

(f) Identification (type and source) of bituminous material and aggregate materials, (and mineral admixture when used).

(g) Calibration date and background count.

(h) Correlation coefficient of the calibration curve (Fit Coeff.).

(i) Weight and measured count of the dry aggregate blank sample prepared and tested during the calibration prodedure.

(j) Mix design percent bituminous material content.

(k) Percent of mineral admixture if used.

(l) Percentages of bituminous material in calibration samples.

(m) Weight of asphaltic concrete calibration samples.

(n) Measured count of each asphaltic concrete calibration sample.

FIELD SAMPLE TEST REPORT

9. The field sample test report shall, as a minimum, contain the following information:

(a) ADOT project number.

(b) Type of mix.

(c) Calibration number.

(d) Mix design percent bituminous material content.

(e) Date and location of field test sample.

(f) Test number and lot number, if applicable.

(g) Field sample test date and name of test operator.

(h) Background count.

(i) Weight of test sample.

(j) Count time (minutes) of test.

(k) Measured count of test sample.

(l) Gauge measured percent bituminous material.

(m) Percent moisture.

(n) Corrected (actual) percent bituminous material.

(o) When a dry aggregate blank sample is prepared and tested, the following information is also reported:

1) Weight and measured count of the dry aggregate blank sample prepared and tested during the calibration prodedure.

2) Weight and measured count of dry aggregate blank sample prepared and tested during production.

3) Percentage change in counts from the calibration dry aggregate blank sample count.

COMPACTION AND TESTING OF BITUMINOUS MIXTURES UTILIZING 152.4 mm (SIX INCH) MARSHALL APPARATUS

(A Modification of ASTM D 5581)

SCOPE

1. (a) This method covers the procedure for compacting and testing bituminous mixtures utilizing 152.4 mm (six inch) Marshall apparatus.

(b) This procedure is used for bituminous mixtures with a mix design gradation target of less than 85% passing the 19.0 mm (3/4 inch) sieve.

(c) This test method may involve hazardous material, operations, or equipment. This test method does not purport to address all of the safety concerns associated with its use. It is the responsibility of the user to consult and establish appropriate safety and health practices and determine the applicability of any regulatory limitations prior to use.

(d) See Appendix A1 of the Materials Testing Manual for information regarding the procedure to be used for rounding numbers to the required degree of accuracy.

(e) Metric (SI) units and values are shown in this test method with English units and values following in parentheses. Values given for metric and English units may be numerically equivalent (soft converted) for the associated units, or they may be given as rounded or rationalized values (hard converted). Either the metric or English units along with their corresponding values shall be used in accordance with applicable specifications. See Appendix A2 of the Materials Testing Manual for additional information on the metric system.

APPARATUS

2. Requirements for the frequency of equipment calibration and verification are found in Appendix A3 of the Materials Testing Manual. Apparatus for this test procedure shall consist of the following:

(a) Compaction Mold Assembly [152.4 mm (six inch) diameter] - Cylindrical mold, baseplate, and extension collar; constructed of steel and conforming to the requirements of Figure 1. (Three compaction mold assemblies are normally utilized.)

(b) Specimen Extruding Device - Extrusion jack or press for extruding specimens from molds.

(c) Compaction Hammer.

1) A mechanical compaction hammer having a flat, circular tamping face with a nominal diameter of 149.4 mm (5-7/8 inches), and a 10.21 ± 0.01 kg (22.50 ± 0.02 pound) sliding weight with a free fall of 457.2 ± 2.5 mm (18.0 ± 0.1 inches).

2) For calibration purposes, the density of a 152.4 mm (six inch) diameter specimen of a 19 mm (3/4") AC mix compacted with the 152.4 mm (six inch) mechanical hammer utilizing approximately 112 blows per side shall not vary by more than 16.0 kg/m^3 (1.0 lb./cu. ft.) from the density of a 101.6 mm (four inch) diameter specimen of the same mix compacted with a compaction hammer meeting the requirements of Arizona Test Method 410. The number of blows may be varied from 112 in order to obtain calibration. If changes or adjustments to the compaction hammer or pedestal are made, a recalibration may be warranted.

(d) Compaction pedestal - The compaction pedestal shall consist of a 203.2 mm by 203.2 mm by 457.2 mm (8" x 8" x 18") wooden post capped with a 304.8 mm by 304.8 mm by 25.4 mm (12" x 12" x1") steel plate. The steel cap shall be firmly fastened to the post. The wooden post shall have a dry weight of 673 to 769 kg/m^3 (42 to 48 lbs./cu. ft.) and shall rest squarely on, and be firmly secured to, a solid concrete slab. The pedestal assembly shall be installed so that the post is plumb and the cap is level.

(e) Specimen Mold Holder - Mounted on the compaction pedestal so as to center the compaction mold over the center of the post. It shall hold the compaction mold, collar, and base plate securely in position during compaction of specimen.

(f) Oven for heating bituminous mixtures and specimen mold assemblies at required temperature.

(g) Hot plate for heating compaction hammer, spoon, and spatula.

(h) A flat spatula with blade approximately 25 mm (1 inch) wide and at least 150 mm (6 inches) long, stiff enough to penetrate the entire bituminous mixture.

(i) Thermometers for determining temperatures of bituminous mixtures. Armored glass thermometers or dial-type with metal stem with a range of 10 to 200 °C (50 to 400 °F) are recommended. Thermometers shall have increments of not greater than 2.8 °C (5 °F).

(j) A balance or scale capable of measuring the maximum weight to be determined and conforming to the requirements of AASHTO M 231, except the readability and sensitivity of any balance or scale utilized shall be at least one gram.

(k) Large spoon for placing mixtures in specimen molds.

(l) If Marshall stability and flow are to be determined, the following additional apparatus is required:

1) Breaking head consisting of upper and lower cylindrical segments or test heads. The lower segment shall be mounted on a base having two perpendicular guide rods or posts extending upward. Guide sleeves in the upper segment shall be in such a position as to direct the two segments together without appreciable binding or loose motion the guide rods. When a 152.4 ± 3.1 mm (6.000 ± 0.120 inch) diameter by 100 mm (4 inch) thick metal block is placed between the two segments, the breaking head shall conform to the requirements of Figure 2.

2) Water bath of sufficient depth to provide for the complete immersion of specimens and thermostatically controlled so as to maintain the bath at 60 ± 1 °C (140° ± 1.8 °F). The tank shall have a perforated false bottom or be equipped with a shelf for supporting specimens 50.8 mm (2 inches) above the bottom of the bath.

3) Marshall stability and flow testing apparatus, with operating instruction manual. The apparatus shall be capable of applying a load with a constant rate of travel of 50.8 ± 2.5 mm (2.0 ± 0.1 inches) per minute.

4) Height gauge capable of measuring the height of specimens to the nearest 0.1 mm (0.001 inch).

PROCEDURE

3 (a) A set of three 4000 gram (approximate) representative samples of bituminous mixture shall be obtained. The weight utilized will be such that compacted specimens for Marshall stability and flow testing meet the height requirement of 88.9 to 101.6 mm (3.500 to 4.000 inches).

(b) Before placing in the mold, the mixture and a mold assembly (baseplate, mold and collar) shall be at approximately 143 °C (290 °F). The face of the compaction hammer shall be thoroughly cleaned and heated on a hot plate set at approximately 143 °C (290 °F). The temperature of the laboratory during compaction of the specimens shall be between 20 and 30 °C (68 and 86 °F).

(c) Place a 152.4 mm (6 inch) paper disc in the bottom of the mold before the mixture is introduced. Place approximately one-half of the batch in the mold with a heated spoon. Spade the mixture vigorously, penetrating the entire mixture, with the heated spatula 15 times around perimeter and 10 times over the interior. Place the second half of the batch in the mold and repeat the spading procedure. Smooth the surface of the mix to a slightly rounded shape.

(d) Unless otherwise indicated on the mix design, the compaction temperature range (except for recycle mixes and bituminous mixtures containing asphalt-rubber) shall be as shown in Table 1 below for the specified type of bituminous material. For asphalt-rubber mixes, the compaction temperature range shall be 163 ± 6 °C (325 ± 10 °F). For recycle mixes, the compaction temperature range shall be 141 ± 6 °C (285 ± 10 °F).

TABLE 1

Bituminous Material	Compaction Temperature Range
AC 10, AC 20	138 ± 6 °C (280 ± 10 °F)
AC 30, AC 40	141 ± 6 °C (285 ± 10 °F)
PG 58-XX, PG 64-XX	138 ± 6 °C (280 ± 10 °F)
PG 70-XX, PG 76-XX	141 ± 6 °C (285 ± 10 °F)
Polymer Modified Asphalts	143 ± 6 °C (290 ± 10 °F)

(e) If necessary, the mixture and mold shall be returned to an oven at the required temperature for the minimum time necessary to achieve the required compaction temperature.

(f) Place a 152.4 mm (six inch) paper disc on top of material, place the mold assembly on the compaction pedestal in the mold holder, and apply the calibrated number of blows (approximately 112) with the mechanical compaction hammer. Compaction shall be performed at a minimum rate of 40 blows per minute. The compaction hammer shall apply only one blow with each fall, that is, there shall not be a rebound impact. Remove the base plate and collar, and reverse and reassemble the mold. Apply the calibrated number of compaction blows to the face of the reversed specimen.

(g) Remove collar, baseplate, and paper discs, and allow specimen to cool. Cooling may be accomplished at room temperature, in a 25 °C (77 °F) air bath, or if more rapid cooling is desired the mold and specimen may be placed in front of a fan until cool.

(h) Extrude the specimen from the mold. Care shall be taken in extruding the specimen from the mold, so as not to develop tensile stresses in the specimen or tear the sides of the specimen.

SPECIMEN TESTING

4. Specimens prepared as above shall be tested by some or all of the following procedures, as applicable due to testing requirements and availability of apparatus.

(a) If Marshall stability and flow are to be determined, measure height of specimens to the nearest 0.1 mm (0.001 inch). Prior to measurement of height, excess material shall be brushed from the edges of the specimens. Compacted specimens shall be 88.9 to 101.6 mm (3.500 to 4.000 inches) in height. If this criteria is not met, the entire set of specimens shall be discarded and a new set prepared after necessary adjustments in sample weight have been made.

(b) Determine the specific gravity of the specimens in accordance with Arizona Test Method 415, Method A. (Assume specimen is at constant weight after cooling.)

(c) Determine the bulk density of each of the specimens, by multiplying the respective specific gravity by 998 kg/m^3 (62.3 lbs./cu. ft.). Record the individual bulk densities to the nearest 1 kg/m^3 (0.1 lb./cu. ft.). The densities of the three specimens shall not differ by more than 48 kg/m^3 (3.0 lbs./cu. ft.). If this density

requirement is not met, the entire set of specimens shall be discarded and a new set of specimens prepared.

(d) Determine the average specific gravity of the specimens and record to the nearest 0.001. Calculate the average bulk density of the specimens, by multiplying the average specific gravity by 998 kg/m^3 (62.3 lbs./cu. ft.). Record the average bulk density to the nearest 1 kg/m^3 (0.1 lb./cu. ft.).

(e) If the stability and flow are to be determined, the steps in paragraphs (f) through (l) below are followed, utilizing apparatus in accordance with the operating instructions for that apparatus.

(f) Bring the specimens to 60 ± 1 °C (140° ± 1.8 °F) by immersing in the water bath 45 to 60 minutes. Prior to testing, it shall be assured that the inside of the test heads are clean, and that the guide rods are clean and lubricated so that the upper test head slides freely over them.

(g) The breaking head temperature shall be maintained between 21 to 38 °C (70 to 100 °F), using a water bath when required. Remove the specimen from the water bath, quickly towel dry specimen and place in the lower segment of the breaking head. Place the upper segment of the breaking head on the specimen, and place the complete assembly in position on the testing machine.

(h) Apply the load to the specimen with a constant rate of 50.8 ± 2.5 mm (2.0 ± 0.1 inches) per minute until the maximum load is reached and the load decreases. The maximum load is defined as the last point in the load/time curve before the load decreases. The elapsed time for the test from removal of the test specimen from water bath to maximum load determination shall not exceed 30 seconds.

(i) Record the stability of each specimen to the nearest 50 newtons (10 pounds force), and the flow to the nearest 0.1 mm (0.01 inch).

(j) Correct the stability obtained for each specimen, for the height of the specimen, by the table in Figure 3. Record the corrected stability to the nearest 50 newtons (10 pounds force).

(k) Determine and record the average corrected stability to the nearest 50 newtons (10 pounds force), and the average flow to the nearest 0.1 mm (0.01 inch).

(l) The average stability shall be corrected to correspond to a 101.6 mm (four inch) specimen by dividing the average test result by 2.0.

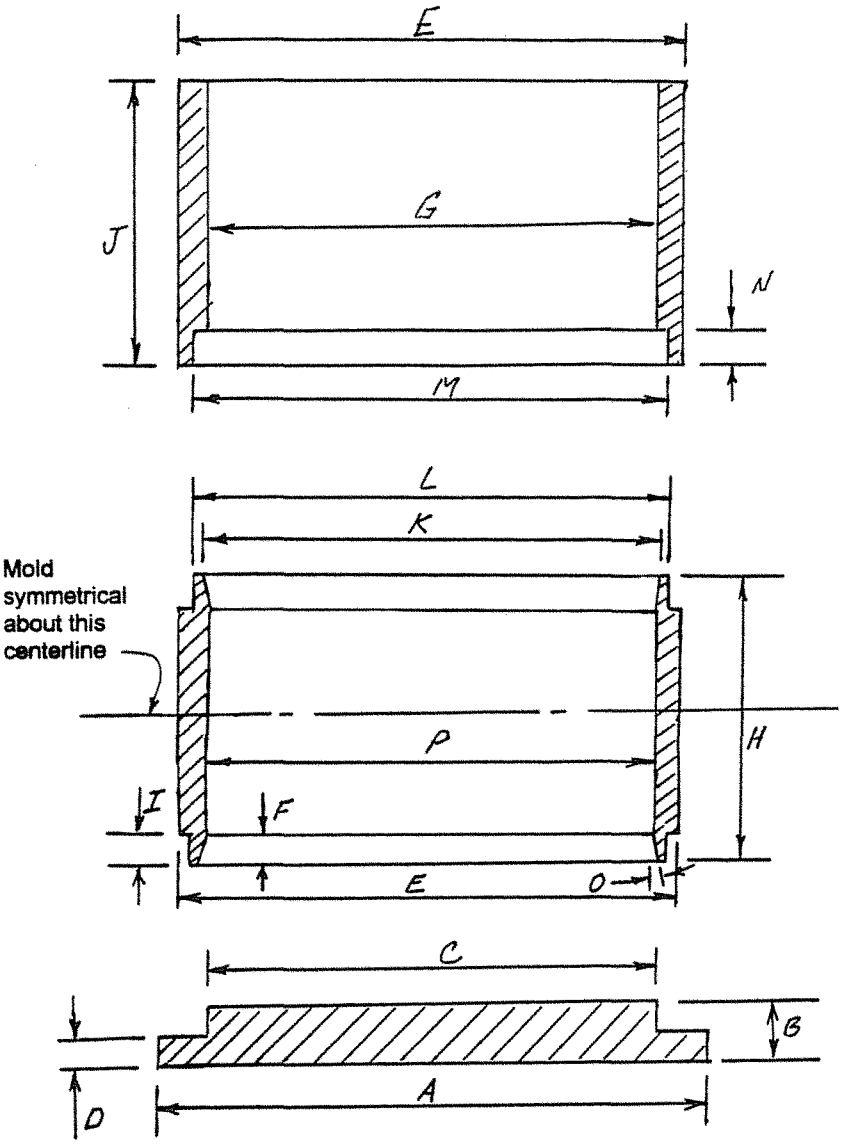

A	171.5 mm (6-3/4 in.)	H	114.3 mm (4-1/2 in.)
B	12.7 mm (1/2 in.)	I	6.4 mm (1/4 in.)
C	151.6 mm (5-31/32 in.)	J	82.6 mm (3-1/4 in.)
D	6.4 mm (1/4 in.)	K	155.6 mm (6-1/8 in.)
E	165.1 mm (6-1/2 in.)	L	159.1 mm (6-17/64 in.)
F	6.4 mm (1/4 in.)	M	159.6 mm (6-9/32 in.)
G	155.6 mm (6-1/8 in.)	N	7.1 mm (9/32 in.)
O	14°		
P	152.2 to 152.6 mm (5.992 to 6.008 in.)		

All dimensions are nominal, except where tolerances are indicated.

152.4 mm (Six Inch) Compaction Mold, Extension Collar, and Baseplate

FIGURE 1

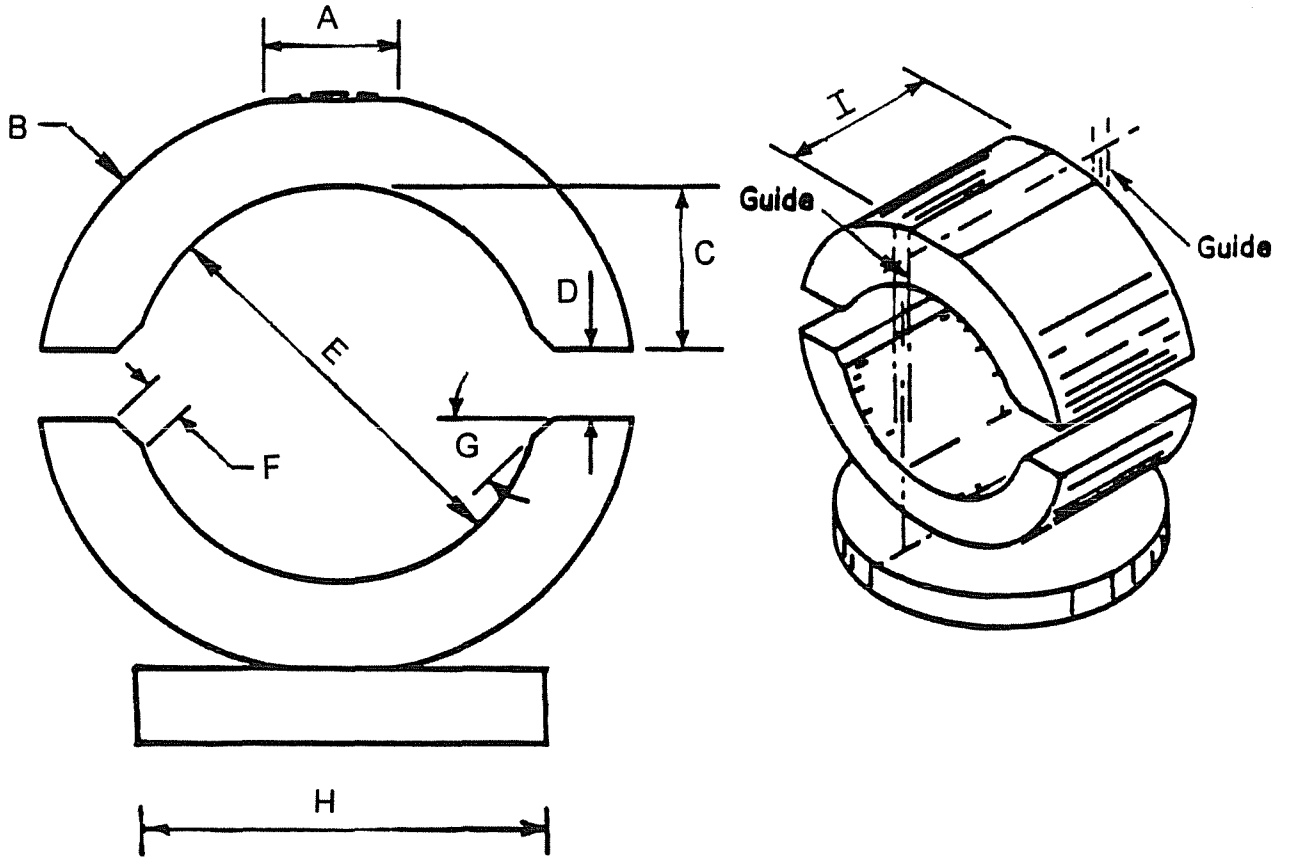

A	50 mm (2 in.)
B	22 mm (0.87 in.) minimum
C	66.7 ± 1.3 mm (2.625 ± 0.050 in.)
D	19.0 ± 0.5 mm (0.750 ± 0.020 in.)
E	152.4 ± 3.1 mm (6.000 ± 0.120 in.)
F	13.5 ± 0.3 mm (0.53 ± 0.01 in.)
G	45°
H	152.4 (6 in.) nominal
I	108 mm (4.25 in.)

Breaking Head

FIGURE 2

STABILITY CORRELATION RATIOS*
For 152.4 mm (6 inch) Diameter Specimens

Height of Specimen (millimeters)	Height of Specimen (inches)	Correlation Ratio
88.9 - 89.1	3.500 - 3.511	1.12
89.2 - 89.6	3.512 - 3.532	1.11
89.7 - 90.2	3.533 - 3.553	1.10
90.3 - 90.7	3.554 - 3.574	1.09
90.8 - 91.2	3.575 - 3.594	1.08
91.3 - 91.7	3.595 - 3.615	1.07
91.8 - 92.3	3.616 - 3.636	1.06
92.4 - 92.8	3.637 - 3.657	1.05
92.9 - 93.3	3.658 - 3.678	1.04
93.4 - 93.9	3.679 - 3.699	1.03
94.0 - 94.4	3.700 - 3.719	1.02
94.5 - 94.9	3.720 - 3.739	1.01
95.0 - 95.5	3.740 - 3.760	1.00
95.6 - 96.0	3.761 - 3.782	0.99
96.1 - 96.5	3.783 - 3.803	0.98
96.6 - 97.2	3.804 - 3.831	0.97
97.3 - 97.9	3.832 - 3.858	0.96
98.0 - 98.6	3.859 - 3.886	0.95
98.7 - 99.2	3.887 - 3.907	0.94
99.3 - 99.7	3.908 - 3.928	0.93
99.8 - 100.4	3.929 - 3.956	0.92
100.5 - 101.1	3.957 - 3.983	0.91
101.2 - 101.6	3.984 - 4.000	0.90

* The measured stability of a specimen multiplied by the correlation ratio for the height of the specimen equals the corrected stability for a 95.25 mm (3-1/2 inch) specimen.

FIGURE 3

DETERMINATION OF AIR VOIDS IN COMPACTED BITUMINOUS MIXTURES

(A Modification of AASHTO Designation T 269)

SCOPE

1. (a) This procedure is used to determine the air voids in compacted bituminous mixtures, and is applicable for specimens which are either laboratory compacted or field compacted.

(b) See Appendix A1 of the Materials Testing Manual for information regarding the procedure to be used for rounding numbers to the required degree of accuracy.

(c) The percent air voids shall be calculated using the maximum density of the bituminous mixture from the Rice Test (Arizona Test Method 417), and the bulk density of the compacted bituminous mixture (Arizona Test Method 415).

CALCULATION

2. Calculate percent air voids as follows:

$$\text{Percent Air Voids} = \left[1 - \frac{\text{Bulk Density}}{\text{Maximum Density}}\right] \times 100$$

REPORT

3. The percent voids shall be reported to the nearest 0.1%.

ASPHALT BINDER CONTENT OF ASPHALTIC CONCRETE MIXTURES BY THE IGNITION FURNACE METHOD

(An Arizona Method)

SCOPE

1. (a) This procedure describes a method for determining the percent asphalt binder content of asphaltic concrete mixtures, by ignition. The aggregate remaining can be used for sieve analysis as indicated in Section 6.

(b) This test method involves hazardous material, operations, and equipment. This test method does not purport to address all of the safety concerns associated with its use. It is the responsibility of the user to consult and establish appropriate safety and health practices and determine the applicability of regulatory limitations prior to use.

(c) See Appendix A1 of the Materials Testing Manual for information regarding the procedure to be used for rounding numbers to the required degree of accuracy.

(d) Metric (SI) units and values are shown in this test method with English units and values following in parentheses. Values given for metric and English units may be numerically equivalent (soft converted) for the associated units, or they may be given as rounded or rationalized values (hard converted). Either the metric or English units along with their corresponding values shall be used in accordance with applicable specifications. See Appendix A2 of the Materials Testing Manual for additional information on the metric system.

APPARATUS

2. Requirements for the frequency of equipment calibration and verification are found in Appendix A3 of the Materials Testing Manual. Apparatus for this test procedure shall consist of the following:

(a) Forced air ignition furnace - capable of maintaining the temperature at 538 ± 5 °C (1000 ± 9 °F), with an internal weighing system thermally isolated from the furnace chamber and accurate to 0.1 gram. The balance shall be capable of

weighing a 3500 gram sample in addition to the sample baskets. A data collection system shall also be included so that the sample mass loss can be automatically determined to an accuracy of 0.1 gram and displayed during a test. The test is deemed complete when the measured mass loss does not exceed 0.01 percent of the sample mass for three consecutive one minute intervals. The furnace shall provide a printout that includes, as a minimum, the initial sample mass, sample mass loss, test time, and test temperature. The furnace shall provide an audible alarm and indicator light when the sample mass loss does not exceed 0.01 percent of the total sample mass for three consecutive one minute intervals. A filter capable of reducing emissions to an acceptable level shall also be incorporated into the furnace. The furnace shall be vented into a hood or to the outside and be set up properly so that there are no noticeable odors escaping into the laboratory. The furnace will have a fan with the capability to pull air through the furnace to expedite the test and to reduce escape of smoke into the laboratory. The furnace shall be equipped so that the door cannot be opened until testing is complete.

(b) Stainless Steel Perforated Baskets - the baskets shall be an appropriate size that allow the samples to be a thickness which allows air to flow up through and around the sample particles. The sample shall be completely enclosed with screen mesh or perforated stainless steel plate or other suitable material. Screen mesh or other suitable material with openings of 2.36 mm (No. 8) has been found to perform well.

(c) Stainless Steel Catch Pan - of sufficient size to hold the sample baskets so that aggregate particles and melting asphalt binder falling through the screen mesh are caught.

(d) Oven - capable of heating to 177 ± 3 °C (350 ± 5 °F).

(e) Scale(s) or balance(s) - capable of measuring the maximum mass to be determined and conforming to the requirements of AASHTO M 231, except the readability and sensitivity of any balance or scale utilized shall be at least 0.1 gram.

(f) Safety Equipment - safety glasses or face shield, high temperature gloves, and long sleeve jacket. Additionally, a heat resistant surface capable of withstanding 650 °C (1200 °F) and a protective cage capable of surrounding the sample baskets shall be provided.

(g) Miscellaneous Equipment - a pan larger than the sample basket(s) for transferring samples after ignition, spatulas, bowls, spoons, and wire brushes.

(h) Mixing apparatus - Mechanical mixing is recommended; 19 liter (20 quart) capacity mixer is required. (Hand mixing may be performed if desired.)

(i) Thermometer - temperature range 10 to 260 °C (50 to 500 °F).

(j) Hot plate - capable of maintaining at temperature of 149 ± 6 °C (300 ± 10 °F).

(k) For performing sieve analysis, apparatus as specified in Arizona Test Method 201.

SAMPLING

3. (a) For preparing calibration samples, obtain samples of aggregates in accordance with Arizona Test Method 105. Samples shall be adequately dried, if necessary, to a free-flowing condition in the portion passing the 4.75 mm (No. 4) sieve.

(b) For testing field samples of asphaltic concrete, obtain a sample of the freshly produced mix in accordance with Arizona Test Method 104. Obtain representative test samples for asphalt binder content and moisture content (if required) determination according to the appropriate sections of Arizona Test Method 416.

(c) The size of the asphalt binder content test sample shall conform to the mass requirement shown in the table below. When the mass of the test sample exceeds the capacity of the equipment used, the test sample may be divided in suitable increments, tested, and the results appropriately combined.

Size of Test Sample	
Nominal Maximum Aggregate Size	**Mass of Sample, grams**
37.5 mm (1-1/2 in.)	4000 - 4500
25.0 mm (1 in.)	3000 - 3500
19.0 mm (3/4 in.)	2000 - 2500
12.5 mm (1/2 in.)	1500 - 2000
9.5 mm (3/8 in.)	1200 - 1700
4.75 mm (No. 4)	1200 - 1700

CALIBRATION

4. This method may be effected by the type of aggregate in the mixture. A calibration factor must be established for each mix type. Certain aggregate types may result in an unusually high calibration factor and erroneous gradation results due to aggregate breakdown. Such mixes should be calibrated and tested at a lower temperature as described in paragraph 4(l).

(a) Weigh up four aggregate samples to the mix design gradation. These samples will be used for a gradation check, two calibration samples, and a butter mix. If mineral admixture is required by the mix design, the appropriate type and quantity shall be added to the aggregate and thoroughly blended. Each aggregate (and mineral admixture if required) sample shall be of an appropriate size so that, when the design asphalt binder content is added, it conforms to the requirements of Section 3(c). Aggregate used shall be sampled from material produced in the current construction season. Any method may be used to combine the aggregates as long as the resultant gradation is representative of the mix design.

(b) Dry the aggregate samples to constant mass at 143 ± 6 °C (290 ±10 °F).

(c) Using one of the prepared aggregate samples perform a gradation analysis according to Section 6 to determine the actual gradation. The gradation shall be representative of the mix design gradation. If the gradation is not representative of the mix design, four new aggregate samples shall be prepared.

(d) Using the remaining three aggregate samples prepare two calibration samples and a butter mix at the design asphalt binder content. The asphalt binder grade and type shall be the same as will be used in the asphalt concrete mixture to be tested. If during drying of aggregate, mass is lost, do not add make-up material, as this will change the gradation of the samples. The percent asphalt binder content is based on the mass of total mix. For each sample, the weight of asphalt binder to be used is determined by the following:

$$\begin{bmatrix}\text{Weight of}\\ \text{Asphalt}\\ \text{Binder}\end{bmatrix} = \frac{\begin{bmatrix}\text{Weight of Aggregate}\\ \text{(and mineral admixture when used)}\end{bmatrix}}{100 - \begin{bmatrix}\text{Percent of}\\ \text{Asphalt}\\ \text{Binder}\end{bmatrix}} \times \begin{bmatrix}\text{Percent of}\\ \text{Asphalt}\\ \text{Binder}\end{bmatrix}$$

(e) All bowls, sample pans, and mixing tools shall be preheated to the laboratory mixing temperature prescribed in the mix design. At the time mixing of the samples begins, the temperature of the asphalt binder and aggregate (and mineral admixture when used) shall be in accordance with the prescribed laboratory mixing temperature. All samples shall be mixed at the same mixing temperature ± 6 °C (10 °F).

(f) Weigh and record the mass of the basket assembly to the nearest 0.1 gram.

(g) The freshly mixed samples may be placed directly in the sample basket assembly. If allowed to cool, the samples must be reheated in a 143 ± 6 °C (290 ± 10 °F) oven for 25 minutes. Do not preheat the sample baskets.

(h) Preheat the ignition furnace to 538 ± 5 °C (1000 ± 9 °F), or as modified in paragraph 4(l).

(i) Test samples in accordance with Section 5(e) through (m).

(j) If the difference between the measured asphalt binder content of the two samples exceeds 0.07, repeat the test using two additional samples, and from the four results discard the high and the low values.

(k) Subtract the actual asphalt binder content for each of the two samples from the measured asphalt binder content. The calibration factor is the average of the two resultant values expressed in percent by mass of the asphalt mixture.

(l) If the calibration factor exceeds 1.0 percent, lower the test temperature to 482 ± 5 °C (900 ± 9 °F) and repeat the test to determine a new calibration factor. If the calibration factor continues to exceed 1.0 percent, lower the test temperature to 427 ± 5 °C (800 ± 9 °F) and repeat the test to determine a new calibration factor. Use the calibration factor obtained at 427 ± 5 °C (800 ± 9 °F) even if it exceeds 1.0 percent.

(m) Perform a gradation analysis on the residual aggregate as indicated in Section 6. Subtract the actual percent passing the 75 µm (No. 200) sieve for each sample from the measured percent passing the 75 µm (No. 200) sieve [as determined in paragraph 4(c)]. Determine the average of the two values. If the resultant average value is greater than 0.50, a correction factor (equal to the resultant average value) for the passing 75 µm (No. 200) material may be applied to the production field sample test results.

PROCEDURE

5. (a) Preheat the ignition furnace to 538 ± 5 °C (1000 ± 9 °F), or to the alternate temperature determined during the calibration [Section 4(l)]. Record the furnace temperature set point prior to the initiation of the test.

(b) The moisture content shall be determined in accordance with Arizona Test Method 406. The moisture content sample shall be obtained at the same time and subjected to the same treatment prior to testing as the asphalt binder content test sample. As an alternate to performing the moisture determination, the test sample may be dried to a constant mass in an oven at 143 °C ± 6 °C (290 °F ± 10 °F).

(c) Enter the calibration factor for the specific mix to be tested as determined in Section 4(j) through (l).

(d) Weigh and record the mass of the basket assembly to the nearest 0.1 gram.

(e) Evenly distribute the asphalt binder content test sample over the entire area of the sample basket(s). Use a spatula or trowel to pull material approximately 25 mm (one inch) away from the outside edge of basket(s) and level the material.

(f) Weigh and record the mass of the sample and basket assembly to the nearest 0.1 gram.

(g) Calculate and record the initial mass of the sample to the nearest 0.1 gram.

(h) Set the ignition furnace controller print mode to give a printout of all test data. Input the initial mass of the sample into the ignition furnace controller. Verify that the correct mass has been entered.

(i) Open the furnace door and place the sample and basket assembly so that it is centered in the chamber. After assuring that the sample basket assembly is not in contact with any wall, close the door. Initiate the test by pressing the start button. This will lock the furnace door and start testing.

(j) Allow the test to continue until the stable light and audible stable indicator indicates the test is complete (the change in mass does not exceed 0.01 percent for three consecutive minutes). If required, press the stop button. This will unlock the furnace door and cause the printer to print out the test results.

(k) Open the furnace door, remove the sample and basket assembly. Allow the sample to cool 30 ± 5 minutes in the basket assembly. Weigh and record the mass of the sample and basket assembly after ignition to the nearest 0.1 gram.

(l) Calculate and record the mass of sample after ignition to the nearest 0.1 gram.

(m) Calculate and record the asphalt binder content of the sample, to the nearest 0.01%, as follows:

$$\%AC = \left[\frac{W_i - W_A}{W_i} \times 100 \right] - C_F - \%M$$

Where: %AC = measured (corrected) asphalt binder content in percent by mass of the sample
W_i = total mass of the sample prior to ignition
W_A = total mass of sample after ignition
C_F = calibration factor, percent by mass of sample
%M = percent moisture in sample

NOTE: During calibration, C_F and %M are zero.

(n) Attach the original printed ticket to the back of the card.

(o) Empty the contents of the baskets into a flat pan. Use a small wire sieve brush to ensure that any residual fines are removed from the baskets.

(p) If needed, perform a gradation analysis on the residual aggregate according to Section 6.

SIEVE ANALYSIS OF AGGREGATE

6. If required, the aggregate shall be subjected to sieve analysis as described below. The coarse sieving shall be performed in accordance with paragraph (a), and the fine sieving in accordance with paragraph (b). The quantity of material on a given sieve at the completion of sieving shall not exceed the amount shown in the table below.

Sieve Size		Maximum Mass Allowed		Maximum Mass Allowed (grams) 304.8 mm (12" Dia. Sieve)
		grams/cm^2	(grams/sq. in.)	
37.5 mm	1-1/2"	3.88	25	2829
25.0 mm	1"	2.79	18	2036
19.0 mm	3/4"	2.17	14	1583
12.5 mm	1/2"	1.55	10	1131
9.5 mm	3/8"	1.24	8	905
6.3 mm	1/4"	0.93	6	679
4.75 mm	No. 4	0.78	5	567
2.36 mm	No. 8	0.62	4	452
2.00 mm and smaller	No. 10 and smaller	0.62	4	---

(a) The coarse sieving of the aggregate shall be performed as follows:

(1) Weigh and record the mass of the sample to be sieved to the nearest gram. Place sample on the top sieve of a nest of 304.8 mm (12 inch) sieves. The nest of sieves shall consist of sieves starting with the smallest size sieve that 100% of the material will pass, down to and including the 2.36 mm (No. 8) sieve and pan. Place lid on nested sieves and screen the material by either mechanical or hand shaking, until not more than 0.5 percent by mass of sample passes any sieve during one minute.

(2) Weigh and record separately, to the nearest gram, the mass of the material retained on the individual sieves and in the pan. The material retained in the pan is recorded as the minus 2.36 mm (No. 8) material.

(3) Do not discard any of the sieved material until the sum of the individual masses is compared to the mass of the sample prior to sieving. If the difference between the two masses is less than or equal to 1.0% of the mass of the sample prior to sieving, an adjustment in mass shall be made on the sieve which has the largest mass retained, except no adjustment shall be made on the minus 2.36 mm (No. 8) material. If the difference is greater than 1.0%, the sample shall be recombined, resieved, and carefully reweighed.

(4) Determine the coarse sieve factor by dividing 100 by the total mass sieved. Record the factor to at least six decimal places.

(5) The percent passing for each sieve in the coarse sieve analysis is determined by multiplying the mass retained on that sieve times the coarse sieve factor, and subtracting the result from the unrounded % passing for the next larger sieve. Values for "mass retained times the coarse sieve factor" and "percent passing each sieve" shall be determined and used in the calculations to at least six decimal places. The percent passing value for each sieve is recorded in the sieve analysis to the nearest percent.

(6) As a check on the coarse sieve analysis, multiply the mass of minus 2.36 mm (No. 8) material times the coarse sieve factor. The result of this calculation, rounded to the nearest percent, should be the same as the value for percent passing the 2.36 mm (No. 8) sieve determined in the paragraph above.

(7) The material passing the 2.36 mm (No. 8) sieve is split, if necessary, to obtain an approximate 500 gram sample for fine sieving. If less than 800 grams passes the 2.36 mm (No. 8) sieve, the entire amount may be subjected to fine sieving. The mass of the sample for fine sieving is recorded to the nearest gram as mass of pass 2.36 mm (No. 8) split.

(b) The elutriation and fine sieving of the pass 2.36 mm (No. 8) material shall be performed as follows:

(1) Subject sample to elutriation through a 75 µm (No. 200) screen either by hand or mechanical washing.

(2) Dry sample to constant mass, allow to cool, then weigh and record the dry mass to the nearest gram.

(3) Place sample on the top sieve of a nest of fine sieves. The nest of sieves shall consist of sieves starting with the 2.00 mm (No. 10) down through and including the 75 µm (No. 200) and pan. Place lid on nested sieves and screen the material by either mechanical or hand shaking, until not more than 0.5 percent by mass of sample passes any sieve during one minute.

(4) Weigh and record separately, to the nearest gram, the mass of material retained on the individual sieves and in the pan.

(5) Do not discard any of the sieved material until the sum of the individual masses is compared to the mass of the sample prior to sieving. If the difference between the two masses is less than or equal to 1.0% of the mass of the

sample prior to sieving, an adjustment in mass shall be made on the sieve which has the largest mass retained, except no adjustment shall be made on the minus 75 µm (No. 200) material. If the difference is greater than 1.0%, the sample shall be recombined, resieved, and carefully reweighed.

(6) Determine and record elutriation to nearest gram by determining the difference between the dry mass and the mass of the pass 2.36 mm (No. 8) split.

(7) Determine a factor for calculating the fine sieve analysis by dividing the percent passing the 2.36 mm (No. 8) sieve (recorded to the nearest percent) by the mass of pass 2.36 mm (No. 8) split. Record the factor to at least six decimal places. If all the pass 2.36 mm (No. 8) material from coarse sieving was subjected to elutriation and fine sieving, a fine sieve factor is not determined. Rather, the coarse sieve factor is utilized and the calculation of the percent passing each sieve is continuous through the entire sieve analysis.

(8) The percent passing for each sieve in the fine sieve analysis is determined by multiplying the mass retained on that sieve times the fine sieve factor, and subtracting the result from the unrounded % passing the next larger sieve, with the exception of the percent passing the 2.36 mm (No. 8) which has previously been recorded to the nearest percent. Values for "mass retained times the fine sieve factor" and "percent passing each sieve" shall be determined and used in the calculations to at least six decimal places. The percent passing value for each sieve is recorded in the sieve analysis to the nearest percent, except the percent passing the 75 µm (No. 200) sieve is recorded to the nearest 0.1 percent.

(9) As a check on the fine sieve analysis, the mass of material passing the 75 µm (No. 200) sieve is added to the elutriation mass, and this total is multiplied times the fine sieve factor. The result of this calculation, rounded to the nearest 0.1 percent, should be the same as the value for the percent passing the 75 µm (No. 200) sieve determined in the paragraph above.

(10) If a correction factor is utilized, the percent passing the 75 µm (No. 200) sieve shall be adjusted by subtracting the correction factor determined in paragraph 4(m).

(c) Other methods may be used that differ from that specified in paragraphs (a) and (b) above to determine % passing each sieve, so long as the method utilized has been proven to give equivalent results. However, any procedure which includes recording percent retained values prior to completing the calculation of all percent passing values is not allowed.

REPORT AND EXAMPLE

7. Report all information on the Asphaltic Concrete Tabulation Laboratory Card. An example of a completed card is shown in Figure 1. A blank card is provided in Figure 2.

(a) Mass of basket assembly.

(b) Mass of sample and basket assembly.

(c) Calculated initial mass of the sample.

(d) Mass of sample and basket assembly after ignition.

(e) Calculated mass of sample after ignition.

(f) Calibration factor.

(g) Percent moisture from moisture test, if one was performed.

(h) Corrected percent asphalt binder content.

(i) Elapsed time of test.

(j) Name of the operator.

(k) Sample test date.

(l) Design percent asphalt binder content.

(m) Ignition furnace set temperature.

(n) If determined, the sieve analysis of the residual aggregate [corrected for passing the 75 µm (No. 200) sieve if applicable].

ARIZONA DEPARTMENT OF TRANSPORTATION

ASPHALTIC CONCRETE TABULATION - IGNITION FURNACE (ENGLISH)

USE CAPITAL LETTERS

LAB NUMBER	ORG NUMBER	MATL	TYPE	PURPOSE	TEST LAB	SIZE	SIZE %
99-7777	8888	AC	34	A	P		

TEST NO.	LOT OR SUFFIX	SAMPLED BY	MO	DAY	YEAR	TIME
4	3	A. JONES	12	21	99	3:25 ☐ AM ☒ PM

SAMPLED FROM	LIFT NO.	RDWY	STATION
ROADWAY - 10' RT. OF ℄	1	NB	999+50 (IF MILEPOST, INPUT DECIMAL)

ORIGINAL SOURCE	PROJECT ENGINEER / SUPERVISOR	PROJECT NUMBER	TRACS NUMBER
PETRIFIED FOREST PIT #2	B. SMITH	F-099-9(99)	H999901C

REMARKS

SHRP

EXAMPLE

COARSE FACTOR .045455 FINE FACTOR .088409

WEIGHTS RETAINED				% RET	% PASS	SPECS
3"						
2 1/2"						
2"						
1 1/2"						
1"					100	
3/4"		9	6	4	96	
1/2"	4	3	9	20	76	
3/8"	1	3	2	6	70	
1/4"	1	7	2	8	62	
#4	1	6	0	7	55	
#8	2	0	7	10		
- #8	9	9	4	✓	45	
Total	2	2	0	0 = i (Rounded)		

Weight of Pass #8 Split: 509 = o

WEIGHTS RETAINED				% RET	% PASS	SPECS
#10		5	6	5	40	
#16		3	4	3	37	
#30	1	0	1	9	28	
#40		7	8	7	21	
#50		2	3	2	19	
#100	1	1	3	10	9	
#200		4	4	4		
-#200			2	✓ q	5.3	
Total	4	5	1	p = Dry Weight		
Elutriation		5	8	= o - p		

q - r: 4.7 Corrected % Pass No. 200

% Pass No. 200 Correction Factor: 0.6 r

ARIZ. 427 (Ignition Furnace Test)

a. Wet Mass of Moisture Sample	1026.2	g
b. Dry Mass of Moisture Sample	1024.0	g
c. Moisture Content (ARIZ 406) [(a - b) / a] x 100	0.21	%
d. Mass of Basket Assembly	4473.6	g
e. Mass of Sample and Basket Assembly	6790.3	g
f. Initial Mass of Sample (e - d)	2316.7	g
g. Ignition Furnace Set Temperature	538	°C
h. Mass of Sample and Basket Assembly After Ignition	6674.0	g
i. Mass of Sample After Ignition (h - d)	2200.4	g
j. Uncorrected Asphalt Binder Content [(f - i) / f] x 100	5.02	%
k. Calibration Factor	0.28	%
l. Corrected Asphalt Binder Content (j - k - c)	4.53	%
m. Design Asphalt Binder Content	4.70	%
n. Elapsed Time of Test	79	Minutes

WHITE ☐
YELLOW ☐
BLUE ☐

RECEIVED DATE	TEST OPERATOR AND DATE	SUPERVISOR AND DATE
12-21-99	JOE TESTER 12-22-99	TED HEADMAN 12-22-99

†● 44-9372 R7/99

FIGURE 1

ARIZONA DEPARTMENT OF TRANSPORTATION

ASPHALTIC CONCRETE TABULATION - IGNITION FURNACE (ENGLISH)

USE CAPITAL LETTERS

LAB NUMBER | ORG NUMBER | MATL | TYPE | PUR-POSE | TEST LAB | SIZE | SIZE %

TEST NO. | LOT OR SUFFIX | SAMPLED BY | MO DAY YEAR | TIME ☐ AM ☐ PM

SAMPLED FROM | LIFT NO. | RDWY | STATION + (IF MILEPOST, INPUT DECIMAL)

ORIGINAL SOURCE | PROJECT ENGINEER / SUPERVISOR | PROJECT NUMBER | TRACS NUMBER

REMARKS

COARSE FACTOR | FINE FACTOR

WEIGHTS RETAINED		% RET	% PASS	SPECS
3" ☐				
2 1/2"				
2"				
1 1/2"				
1"				
3/4"				
1/2"				
3/8"				
1/4"				
#4				
#8				
- #8				
Total	= i (Rounded)			

Weight of Pass #8 Split = o

WEIGHTS RETAINED		% RET	% PASS	SPECS
#10				
#16				
#30				
#40				
#50				
#100				
#200				
-#200			q	
Total	p = Dry Weight			
Elutri-ation	= o - p		q - r	Corrected % Pass No. 200

% Pass No. 200 Correction Factor r

ARIZ. 427 (Ignition Furnace Test)

a. Wet Mass of Moisture Sample g

b. Dry Mass of Moisture Sample g

c. Moisture Content (ARIZ 406) [(a - b) / a] x 100 %

d. Mass of Basket Assembly g

e. Mass of Sample and Basket Assembly g

f. Initial Mass of Sample (e - d) g

g. Ignition Furnace Set Temperature °C

h. Mass of Sample and Basket Assembly After Ignition g

i. Mass of Sample After Ignition (h - d) g

j. Uncorrected Asphalt Binder Content [(f - i) / f] x 100 %

k. Calibration Factor %

l. Corrected Asphalt Binder Content (j - k - c) %

m. Design Asphalt Binder Content %

n. Elapsed Time of Test Minutes

WHITE ☐
YELLOW ☐
BLUE ☐

RECEIVED DATE | TEST OPERATOR AND DATE | SUPERVISOR AND DATE

†● 44-9372 R7/99

FIGURE 2

July 15, 2005
(3 Pages)

SERIES 500

BITUMINOUS MATERIALS

The following test methods and specifications shall be adhered to in accordance with the respective designation:

ARIZONA TEST METHODS:

TITLE	DESIGNATION
Percentage of Uncoated Particles Using Asphalt Emulsions ……..	ARIZ 502b
Vacuum Recovery of Asphalt Emulsion Residue …….	ARIZ 504
Asphalt Rejuvenating Agent Residue Insoluble in Petroleum Ether …….	ARIZ 505a
Rapid Determination of Asphaltenes and Chemical Reactivity of Asphalts ……..	ARIZ 509a
Recovery of Asphalt from Extraction Solution ……..	ARIZ 511
Residue by Evaporation …….	ARIZ 512a

AASHTO AND ASTM TEST METHODS AND SPECIFICATIONS:

TITLE	DESIGNATION AASHTO	DESIGNATION ASTM
Cutback Asphalt (Medium-Curing Type) …….	M 82	
Performance Graded Asphalt Binder ……..	M 320	
Accelerated Aging of Asphalt Binder Using a Pressurized Aging Vessel (PAV) …….	R 28	
Solubility of Bituminous Materials …….	T 44	
Flash and Fire Points by Cleveland Open Cup …….	T 48	
Penetration of Bituminous Materials …….	T 49	

AASHTO AND ASTM TEST METHODS AND SPECIFICATIONS: (Continued)

TITLE	DESIGNATION AASHTO	DESIGNATION ASTM
Float Test for Bituminous Materials ……	T 50	
Ductility of Bituminous Materials ……..	T 51	
Softening Point of Bitumen (Ring and Ball Apparatus) ……	T 53	
Water in Petroleum Products and Bituminous Materials by Distillation ……	T 55	
Testing Emulsified Asphalts …….....	T 59	
Saybolt Viscosity .....…….....	T 72	
Distillation of Cut - Back Asphaltic (Bituminous) Products	T 78	
Flash Point with Tag Open-Cup Apparatus for Use with Material Having a Flash Less Than 93.3 °C (200 °F) ……	T 79	
Spot Test of Asphaltic Materials ……..	T 102	
Kinematic Viscosity of Asphalts	T 201	
Viscosity of Asphalts by Vacuum Capillary Viscometer ……	T 202	
Specific Gravity of Semi-Solid Bituminous Materials ……...	T 228	
Effect of Heat and Air on a Moving Film of Asphalt (Rolling Thin Film Oven Test) ..…….....	T 240	
Elastic Recovery Test of Bituminous Materials by Means of a Ductilometer ……	T 301	
Determining the Flexural Creep Stiffness of Asphalt Binder Using the Bending Beam Rheometer (BBR) ……	T 313	

AASHTO AND ASTM TEST METHODS AND SPECIFICATIONS: (Continued)

TITLE	DESIGNATION AASHTO	DESIGNATION ASTM
Determining the Fracture Properties of Asphalt Binder in Direct Tension (DT) ……	T 314	
Determining the Rheological Properties of Asphalt Binder Using a Dynamic Shear Rheometer (DSR) ……	T 315	
Viscosity Determination of Asphalt Binder Using Rotational Viscometer ……..	T 316	
Characteristic Groups in Rubber Extender and Processing Oils and Other Petroleum-Derived Oils by the Clay-Gel Absorption Chromatographic Method .....…….....		D 2007
Solubility of Asphalt Binders in Toluene by Centrifuge ……..		D 5546

NOTE: It shall be assured that the appropriate test methods and specifications as given in the project requirements are being adhered to.

PERCENTAGE OF UNCOATED PARTICLES USING ASPHALT EMULSIONS

(An Arizona Method)

SCOPE

1. (a) This method describes a procedure for determining percentage of uncoated particles based on the failure of emulsions to coat a specific mixture of Standard Sand and Type III portland cement.

(b) This test method may involve hazardous material, operations, or equipment. This test method does not purport to address all of the safety concerns associated with its use. It is the responsibility of the user to consult and establish appropriate safety and health practices and determine the applicability of any regulatory limitations prior to use.

(c) See Appendix A1 of the Materials Testing Manual for information regarding the procedure to be used for rounding numbers to the required degree of accuracy.

(d) Metric (SI) units and values are shown in this test method with English units and values following in parentheses. Values given for metric and English units may be numerically equivalent (soft converted) for the associated units, or they may be given as rounded or rationalized values (hard converted). Either the metric or English units along with their corresponding values shall be used in accordance with applicable specifications. See Appendix A2 of the Materials Testing Manual for additional information on the metric system.

APPARATUS

2. Requirements for the frequency of equipment calibration and verification are found in Appendix A3 of the Materials Testing Manual. Apparatus for this test procedure shall consist of the following:

(a) Mixing Bowl or Pan - A mixing bowl or round bottom pan with a surface which is non-reactive with the emulsion (e.g., stainless steel, glass, or plastic) of approximately 3 liter (3 quart) capacity.

(b) Mixing Tool - A stainless steel spoon approximately 250 mm (ten inches) long.

(c) Thermometer - A thermometer accurate to 0.5 °C. (1 °F.).

(d) Balance - A balance or scale capable of measuring the maximum weight to be determined and conforming to the requirements of AASHTO M 231, except the readability and sensitivity of any balance or scale utilized shall be at least 0.1 gram.

(e) Stopwatch or other timing device.

(f) 850 μm (No. 20) sieve conforming to the requirements of AASHTO Designation M 92.

MATERIALS

3. The materials shall consist of the following:

(a) Standard Sand (20-30) conforming to ASTM C 778.

(b) Type III portland cement conforming to ASTM C 150 and having a minimum specific surface of 1900 cm^2 /gram.

PROCEDURE

4. (a) Thoroughly mix a representative sample of the emulsion to be tested. If any large particles are present, the emulsion shall be strained through a single layer of damp cheesecloth or the 850 μm (No. 20) sieve.

(b) Screen approximately 500 grams of the Standard Sand through the 850 μm (No. 20) sieve.

(c) Weigh 461 ± 0.1 grams of the screened sand into the tared mixing bowl or pan.

(d) Add 4 ± 0.1 grams of the cement to the sand.

(e) Mix the sand and cement for one minute, using the mixing spoon to obtain a uniform mixture.

(f) Bring the emulsion to a temperature of 25 ± 2 °C (77 ± 3 °F).

(g) Weigh 35 ± 0.1 grams of the emulsion into the sand-cement mixture.

(h) Mix vigorously with the spoon for 2-1/2 minutes, using a stirring and kneading motion.

(i) Empty the contents of the mixing bowl or pan onto absorbent paper so that the mixture covers an area approximately 250 mm (10 inches) in diameter.

(j) Allow to dry thoroughly (approximately two hours).

(k) Pour the dried mixture into the 850 μm (No. 20) sieve and shake and vibrate the sieve until all of the uncoated particles have passed through the sieve.

(l) Pour sand which has passed the 850 μm (No. 20) sieve into a tared pan and weigh to the nearest 0.1 gram.

CALCULATIONS

5. Calculate the percent of uncoated sand using the following formula:

$$U = \frac{W_p}{465} \times 100$$

Where: U = Percent of uncoated sand
W_p = Weight of Sand passing 850 μm (No. 20) sieve.

REPORT

6. Report percentage of uncoated sand to the nearest one percent.

VACUUM RECOVERY OF ASPHALT EMULSION RESIDUE
(An Arizona Method)

Scope

1. This method describes a low temperature vacuum procedure for recovery of the asphalt residue from asphalt emulsions. It is is not suitable for quantitative recovery of solvents from emulsions containing low boiling range distillates.

Apparatus

2. The apparatus shall consist of the following:

(a) Brass stirring rod.

(b) 8 oz. ointment can.

(c) 100 ml. stainless steel beaker.

(d) No. 20 sieve conforming to AASHTO designation M 92.

(e) Vacuum recovery apparatus as shown assembled in Fig. 1.

1) Vacuum source capable of producing an absolute vacuum within the system of approximately 710 mm (28 in.) mercury.

2) Thermometer — shall have a range of -5° to +200°C (23°F to 392°F). The overall length shall be 600 mm (24 in.) and the distance from the bottom of the bulb to the zero point shall be 300 mm (12 in.)

3) Stirrer hot plate.

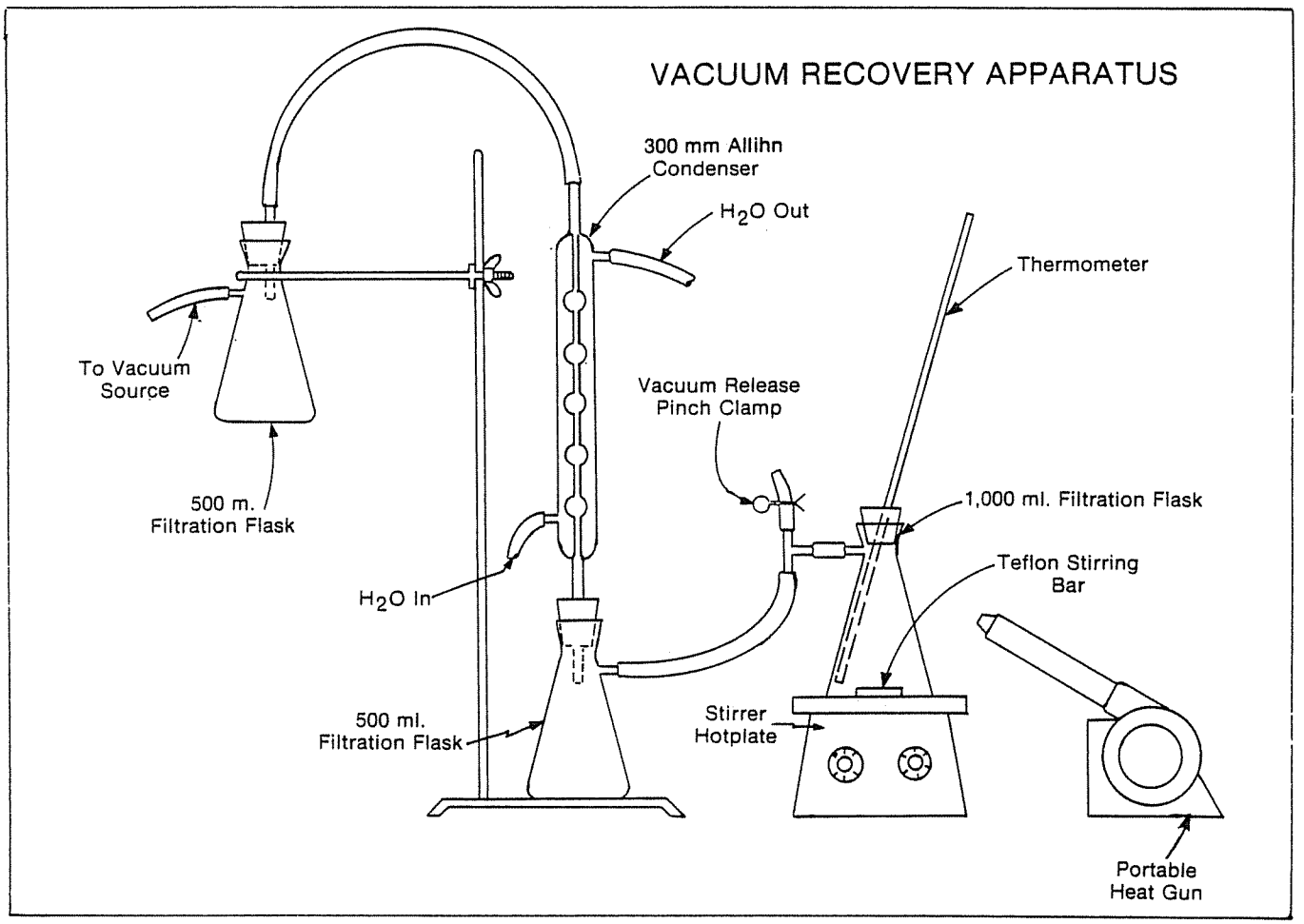

FIGURE 1

4) Teflon covered stirring bar.

5) 1000 ml. and two 500 ml. filtering flasks with tubulation.

6) 300 mm Allihn condensor.

7) Portable heat gun.

8) Miscellaneous rubber stoppers and connecting hose.

9) Vacuum release clamp.

(f) Additional vacuum recovery apparatus for alternate test procedure.

1) 8" waterbath — hemispherical.

2) 500 ml. Separatory Funnel — pear shape.

Material

3. Isopropyl alcohol, technical grade.

Sample Preparation

4. Emulsion shall be thoroughly stirred and strained through a No. 20 sieve just prior to use.

Test Procedure

5. (a) Pour 750 ± 25 ml. of the strained emulsion into a 1000 ml. stainless steel beaker.

(b) Cool the emulsion to approximately 25°C (77°F).

(c) Add isopropyl alcohol (approximately 25 to 100 ml.) in sufficient quantity to break the emulsion.

(d) Knead lumps with brass stirring rod against the sides of the beaker to expel the water from the broken asphalt.

(e) Apply a film of soap around neck of the 1000 ml. vacuum flask to prevent asphalt from sticking to the flask.

(f) Wet hands thoroughly with distilled water. Remove the stirring rod on which the broken asphalt emulsion (now asphalt) is clinging, and with the wet hands gently squeeze out all entrained water while washing asphalt under a constant flow of distilled water. Form asphalt into a rope and drop into the 1000 ml. flask containing the Teflon stirring bar. (Amount of asphalt to be added should be enough to cover bottom of flask approx. 1" in depth). Wash soap off of flask and rinse soap from sample and flask with distilled water making sure water is drained from flask before it is placed on hot plate.

(g) Insert the stoppered themometer (positioned in the stopper at an angle to prevent contact with stirring bar) into the flask and set on hot plate at a medium high heat setting (#4). The bulb of the thermometer should be 6 mm. (¼ inch) from the bottom of the flask.

(h) Turn on the water to the condenser, start the stirring bar and open the vacuum line to establish a vacuum of approximately 710 mm (28 in.) mercury in the apparatus.

(i) Turn on the portable heat gun to medium high heat (#6) and use wherever needed to keep condensation from forming inside the vacuum flask.

(j) Allow temperature to rise until it reaches approximately 90° C., turn hot plate down to setting #2 and then allow the temperature of the residue to rise until it reaches 115° C. ± 3° C. (239° F. ±5° F). Hold at this temperature for at least 1 minute (if possible).

NOTE: The hot plate temperature will need to be regulated during heating of residue to allow for complete removal of water. (This removal is complete when there is no longer foaming in the residue.) If the 115° C temperature is reached and there is still water present, the flask should be removed from the hot plate, allowed to cool a short time, and then heating resumed at a reduced temperature. As the residue heats up, soap bubbles will form up into the vacuum line and condense in the filtering flask. Some emulsions may react violently between 60° C (140° F) and 105° C (221° F) and rise up in the flask. Use the vacuum release clamp as often as needed to control the asphalt. DO NOT let asphalt escape into the vacuum line.

(k) Turn off vacuum and slowly release vacuum through apparatus using release clamp. Stop stirrer, remove thermometer, and pour residue into a 8 oz. ointment can. Residue is now ready for specified tests.

Alternate Test Procedure

6. This procedure is recommended for use with emulsions that will not break using isopropyl alcohol.

(a) Pour 350 ml. to 400 ml. of the strained emulsion into the separatory funnel.

(b) Place the stoppered funnel into the 1000 ml. flask and carefully set the unit into the preheated water bath (Setting #6).

(c) With the water circulating through condenser, open the vacuum line to establish a vacuum of approximately 710 mm (28 in.) mercury in the apparatus.

(d) Start the stirring bar at slow speed and slowly add the emulsion at a rate which allows the emulsion to break as it leaves the funnel. (This is indicated by the presence of foaming at the end of the funnel.

CAUTION: If the emulsion is added to the flask too rapidly, it may react violently and rise up in the flask. If this happens quickly return addition of emulsion to proper rate and use the vacuum release clamp to prevent asphalt from entering into the vacuum line.

(e) Continue adding emulsion to flask until all of it is removed from the funnel.

(f) Close the vacuum line and slowly release vacuum from unit. Stop the stirring bar.

(g) Remove the separatory funnel and the water bath. Wipe bottom of flask dry, insert the thermometer as in 5 (g) and follow original method to completion.

ASPHALT REJUVENATING AGENT RESIDUE INSOLUBLE IN PETROLEUM ETHER

(An Arizona Method)

SCOPE

1. (a) This method of test is intended for determining the percent of insoluble matter in an asphalt rejuvenating agent using petroleum ether.

(b) This test method may involve hazardous material, operations, or equipment. This test method does not purport to address all of the safety concerns associated with its use. It is the responsibility of the user to consult and establish appropriate safety and health practices and determine the applicability of any regulatory limitations prior to use.

(c) See Appendix A1 of the Materials Testing Manual for information regarding the procedure to be used for rounding numbers to the required degree of accuracy.

(d) Metric (SI) units and values are shown in this test method with English units and values following in parentheses. Values given for metric and English units may be numerically equivalent (soft converted) for the associated units, or they may be given as rounded or rationalized values (hard converted). Either the metric or English units along with their corresponding values shall be used in accordance with applicable specifications. See Appendix A2 of the Materials Testing Manual for additional information on the metric system.

APPARATUS

2. Requirements for the frequency of equipment calibration and verification are found in Appendix A3 of the Materials Testing Manual. Apparatus for this test procedure shall consist of the following:

(a) Erlenmeyer flask, 125 mL capacity, with stopper.

(b) Drying oven, adequately ventilated, capable of maintaining a temperature of 110 ± 5 °C (230 ± 9 °F).

(c) Desiccator of adequate size to hold several crucibles.

(d) Analytical balance capable of measuring the maximum weight to be determined and conforming to the requirements of AASHTO M 231, except the readability and sensitivity of any balance utilized shall be at least 0.001 gram.

(e) Filtering apparatus, including:

(1) Vacuum pump

(2) Filtering flask, 250 mL capacity

(3) Filter tube with molded rubber gasket to hold Gooch crucible.

(4) Rubber tubing.

(5) Glass fiber pad conforming to AASHTO T 44.

(6) Gooch crucible, 4 cm high, 3.5 cm top diameter and 2.1 cm bottom diameter, prepared in accordance with AASHTO T 44.

MATERIALS

3. Petroleum either, 30 to 60 °C, reagent grade.

CAUTION: Always work under a hood, avoid breathing petroleum ether fumes, and keep material away from flame. It is highly flammable and toxic.

TEST PROCEDURE

4. (a) Measure approximately 1 gram of asphalt rejuvenating agent residue into the tared Erlenmeyer flask and weigh to the nearest 0.001 gram.

(b) Pour half of a 100 mL portion of petroleum ether into the flask and swirl the contents until all the residue has dissolved.

(c) Add the balance of the 100 mL portion of petroleum ether and swirl the flask to mix the contents thoroughly. Place a stopper in the flask and set aside for 30 minutes.

(d) Place the tared Gooch crucible and filter mat into position on the filtering flask. Wet the mat with a small portion of petroleum ether.

(e) Apply light suction as decantation through crucible is begun. Use suction sparingly because it tends to clog the filter mat. Exercise utmost care in making the filtration to avoid stirring up any precipitate, in order that the filter mat may not be clogged and that the first decantation may be as complete as possible.

(f) Wash the flask with petroleum ether and pour the bulk of the insoluble material on the filter mat after the crucible has drained. Transfer all insoluble material from the flask to the crucible, using a rod with flattened rubber tip (a.k.a. "policeman") if necessary. Rinse the flask and policeman thoroughly with petroleum ether.

(g) Wash the insoluble matter in the crucible until the filtrate is substantially colorless, then apply strong suction to remove the remaining petroleum ether.

(h) Remove crucible from flask and wipe bottom of crucible clean.

(i) Dry the crucible in a 110 ± 5 °C (230 ± 9 °F) oven for 15 to 20 minutes, cool in desiccator for 15 to 20 minutes and weigh to the nearest 0.001 gram.

NOTE: The crucible shall be cooled in the desiccator for the same amount of time that it is dryed in the oven.

CALCULATIONS

5. Calculate the percentage of the total sample which is insoluble in petroleum ether. The formula is as follows:

$$\text{Insoluble Residue, percent} = \frac{A}{B} \times 100$$

Where: A = total weight insoluble

B = total weight of sample

REPORT

6. Report the total insoluble residue to the nearest 0.01 percent.

RAPID DETERMINATION OF ASPHALTENES AND CHEMICAL REACTIVITY OF ASPHALTS

(An Arizona Method)

SCOPE

1. (a) This method describes a procedure for the determination of Asphaltene, (A), content and Chemical Reactivity Ratio, (CRR), of asphalts. It is not intended to supplant the complete asphalt analytical methods, but should be used when only the A and CRR values are needed.

(b) This test method involves hazardous material, operations, or equipment. This test method does not purport to address all of the safety concerns associated with its use. It is the responsibility of the user to consult and establish appropriate safety and health practices and determine the applicability of regulatory limitations prior to use.

(c) See Appendix A1 of the Materials Testing Manual for information regarding the procedure to be used for rounding numbers to the required degree of accuracy.

APPARATUS

2. Requirements for the frequency of equipment calibration and verification are found in Appendix A3 of the Materials Testing Manual. Apparatus for this test procedure shall consist of the following:

(a) Erlenmeyer flasks with glass stoppers, 125 mL capacity.

(b) Analytical balance capable of measuring the maximum weight to be determined and conforming to the requirements of AASHTO M 231, except the readability and sensitivity of any balance or scale utilized shall be at least 0.0001 gram.

(c) Glass funnels, 75 mm top diameter.

(d) Hot plate, with variable heat control.

(e) Beakers, Griffin type, 250 mL capacity.

(f) Funnel support.

(g) Infra-red heat lamp, variable intensity.

MATERIALS

3. (a) Filter paper, Whatman Glass Microfibre, 12.5 cm, Grade GF/A.

(b) Normal pentane, (nC_5H_{12}), practical grade.

(c) Petroleum Ether, 30 to 60 °C, reagent grade

(d) Concentrated Sulfuric Acid, reagent grade, (H_2SO_4 Assay: 95-98%)

(e) Sodium Hydroxide, pellets, reagent grade.

CAUTION: Pentane and Petroleum Ether are extremely flammable solvents. Smoking or open flames should not be permitted in the area while they are in use. With the exception of weighing, all operations should be carried out in a functioning fume hood. Protective goggles, gloves and laboratory apron shall be worn.

PROCEDURE

4. (a) Weigh approximately 1 gram of the asphalt into a tared 125 mL Erlenmeyer flask. Weigh to the nearest 0.1 mg and record as S_f (weight of sample and flask).

(b) Add 75 mL of normal pentane to the flask and dissolve the asphalt completely. Frequent shaking during the first 15 minutes will aid in dissolving the asphalt. If it does not dissolve, warm cautiously until the asphalt is in solution.

(c) Allow the solution to settle overnight.

(d) Stir vigorously with a glass stirring rod to initiate precipitation, and allow to settle until clear.

(e) Carefully decant liquid through filter paper into a 250 mL beaker, using the Glass Microfibre filter paper. Wash the precipitate remaining in the flask 3 times with 15-20 mL portions of pentane, each time decanting liquid into filter paper. Thoroughly wash flask with pentane and add washings to filter paper. Thoroughly wash precipitate on filter paper with pentane until discoloration is removed from the filter paper. Discard paper containing the precipitate.

NOTE: It is very important that the filter paper be kept wet throughout the washing and filtering process in step (e).

(f) Thoroughly wash and dry the flask used in this operation. Methylene Chloride washing is recommended.

(g) Using the heat lamp, evaporate the solution in the beaker until approximately 25 mL remains. Pour solution into the 125 mL flask previously used. Wash the beaker with pentane until clean, adding the washings to the flask.

(h) Evaporate the contents of the flask with the heat lamp until all the solvent has been removed. Then place on the hot plate and heat cautiously until a white vapor is noticed at the top of the flask.

(i) Remove the flask from the hot plate. Cool and weigh to the nearest 0.1 mg. Record this weight as B_p (weight of flask and residue).

(j) Add 75 mL of Petroleum Ether to the flask containing the residue and dissolve ALL the residue.

(k) Pour the solution into a 250 mL beaker and thoroughly wash the flask with Petroleum Ether. Add the washings to the solution in the beaker. If necessary, reduce the volume of the solution to 100 - 125 mL by evaporation with the heat lamp.

(l). Thoroughly wash and dry the flask. Methylene Chloride washing is recommended.

(m) Slowly add 10 $\pm$ 0.5 mL concentrated sulfuric acid to the solution in the beaker while stirring vigorously. Continue stirring for at least 3 minutes.

(n) Allow the solution to settle until clear.

(o) Cover bottom of a 250 mL beaker with Sodium Hydroxide pellets, then immediately filter the liquid through a filter paper into the 250 mL beaker containing the Sodium Hydroxide pellets. Do not allow the sludge to leave the beaker. Wash the sludge in the beaker 3 times, using 15 - 20 mL portions of Petroleum Ether. Filter the washings into the pellets in the beaker, then discard filter paper.

CAUTION: Do not touch the pellets with bare hands.

CAUTION: Sludge contains large amounts of unreacted acid. Contact with Sodium Hydroxide pellets may cause explosion.

(p) Using the heat lamp, evaporate this solution to approximately 50 mL, then filter into the 125 mL Erlenmeyer flask previously used, thoroughly washing beaker and pellets into filter paper, using a 30-40 mL portion of Petroleum Ether.

(q) Discard the filter paper containing the Sodium Hydroxide pellets.

(r) Evaporate the contents of the flask with heat lamp until all the solvent has been removed. Then place on the hot plate and heat cautiously until a white vapor is noticed at the top of the flask.

(s) Remove the flask from the hot plate. Cool and weigh to the nearest 0.1 mg. Record this weight as "C" (weight of flask and residue).

CALCULATIONS AND REPORT

5. (a) Percent Asphaltenes:

$$A = \frac{S_f - B_p}{S} \times 100$$

Where:
S = Weight of sample, $S_f - T_f$
S_f = Weight of sample and flask, grams
T_f = Tare weight of flask, grams
A = Percent Asphaltenes.
B_p = Weight of flask and residue from Pentane washing, grams

(b) Percent Unreacteds:

$$U = \frac{C - T_f}{S} \times 100$$

Where: U = Percent Unreacteds.
C = Weight of flask and residue from Petroleum Ether washing, grams
S = Weight of Sample, grams
T_f = Tare weight of flask, grams

(c) CRR (Chemical Reactivity Ratio) Value:

$$CRR = \frac{100 - (A + U)}{U}$$

Where: CRR = Chemical Reactivity Ratio
A = Percent Asphaltenes
U = Percent Unreacteds.

(d) Report Asphaltenes as a percentage of the asphalt sample, to the nearest 0.01%.

(e) Report CRR Value as a ratio of the Reacted and Unreacted asphalt components, to the nearest 0.01 unit, if this value is required.

FLOW SHEET - MODIFIED ROSTLER-STERNBERG ANALYSIS

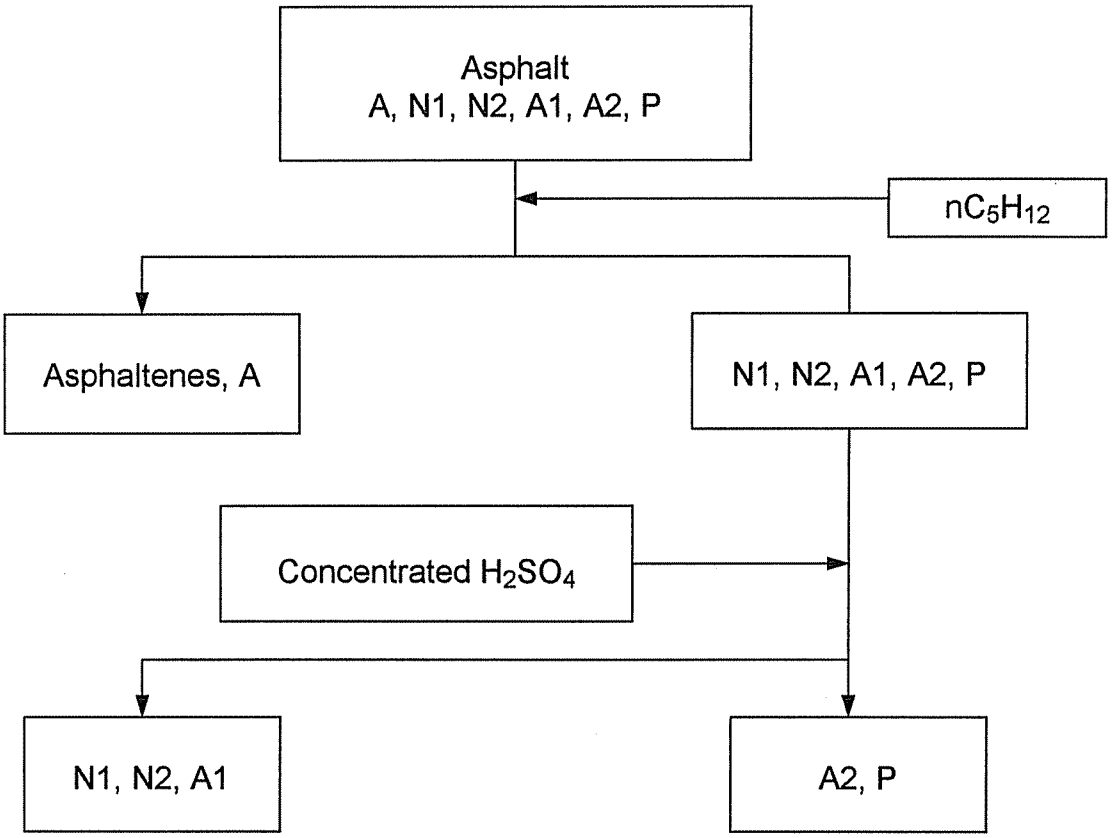

NOTE:

A	=	Asphaltenes	Insoluable in nC_5H_{12}
*N1	=	1st Nitraffins	Precipitated by concentrated H_2SO_4
*N2	=	2nd Nitraffins	Precipitated by concentrated H_2SO_4
A1	=	1st Acidaffins	Precipitated by concentrated H_2SO_4
A2	=	2nd Acidaffins	Unreacted by concentrated H_2SO_4
P	=	Paraffins	Unreacted by concentrated H_2SO_4

* 1st and 2nd Nitraffins are Nitrogen Bases

RECOVERY OF ASPHALT FROM EXTRACTION SOLUTION

(An Arizona Method)

Scope

1. This method describes a procedure to recover an asphalt residue from an extraction solution. The asphalt is recovered with substantially the same properties that it possessed in the asphaltic mix.

Apparatus

2. The apparatus shall consist of the following:

(a) Stirring hot plate with stirring bar.

(b) 4000 ml. beaker

(c)* 1000 ml. beaker

(d) Funnels

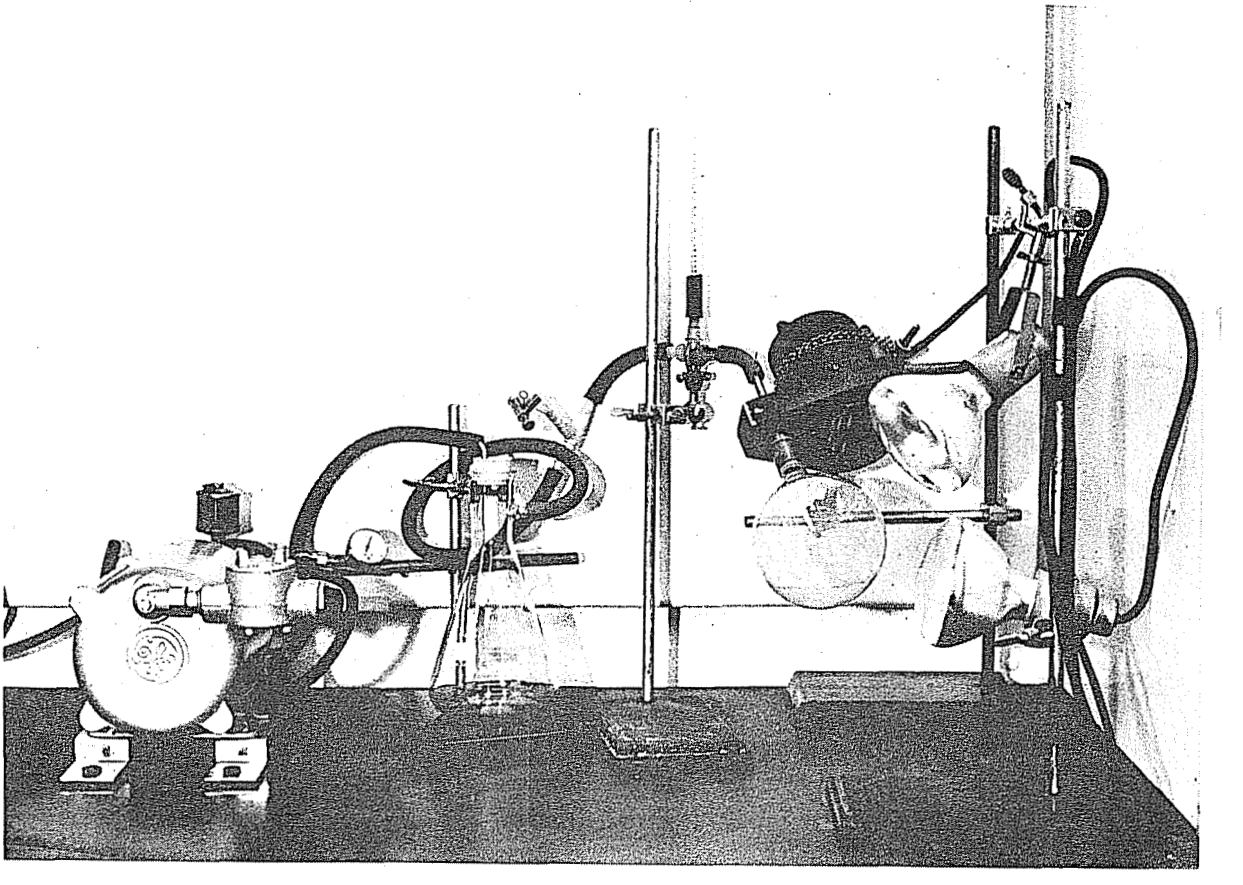

FIGURE 1

(e)* Centrifuge-capable of maintaining 1800 rpm and equipped with a minimum of four centrifuge bottles.

(f) Rotary Vacuum Evaporator apparatus as listed below and as shown assembled in Figure 1:

1) Rotary Vacuum Evaporator

2) 1000 ml. round bottom flask

3) Heat Source - two 250 watt heat lamps placed approximately 2 inches from the 1000 ml. round bottom flask.

4) 1000 ml. filtration flask

5) Vacuum Pinch Release Clamp

6) Vacuum Pump - capable of maintaining a vacuum of 15 to 20 inches mercury. The pump exhaust must be vented directly into the hood exhaust system.

7) Vacuum gauge with adjustable valve for regulating the vacuum.

8) Thermometer - with range of 78° F. to 130° F. in 0.2° F. increments placed in the vacuum line within 4 inches of the Rotary Vacuum Evaporator.

*Required only when utilizing the alternate procedure (Section 4).

Procedure

3. NOTE: *This procedure may be used if the extraction solution does not contain fine aggregate material.*

(a) Pour the extraction solution into the 4000 ml. beaker which contains a stirring bar.

(b) Heat at medium setting (#4) while stirring on the Hot Plate, until 400 to 450 ml. of the solution remains.

(c) Remove Stirring Bar and using Funnel pour solution into the 1000 ml. round bottom flask.

(d) Wash inside mouth and top 1/2 of flask with a small amount of extracting solvent.

CAUTION: It is important that a maximum of 500 ml. of solution be in flask to prevent solution from being drawn into the vacuum line.

(e) Place flask on Rotary Vacuum Evaporator, turn on vacuum (which has been adjusted to maintain 15-20 in. mercury) and make sure flask is properly seated in position on the shaft, then turn on the rotor and the heat lamps.

CAUTION: If the vacuum is released during the procedure it is possible that the flask will slide off of the shaft. If it becomes necessary to release the vacuum, provision must be made to hold flask in place with gloved hand.

(f) Allow to run while a rise in temperature, followed by a decline in temperature is noted. When the temperature drops to a stable condition and either holds at that temperature for 5 minutes or shows a rise of 0.2° F. the removal of all solvent is indicated.

(g) While holding the neck of the flask with glove suitable for high temperatures turn off the rotor and then the vacuum.

NOTE: *If vacuum is maintained at 15-20 in. mercury, there should be no occurence of the asphalt being drawn up into the vacuum line, however, if this does occur, the vacuum should be released immediately by use of the pinch release clamp, adhering to CAUTION following paragraph 3 (e). Using gloves remove flask from shaft, then clean vacuum system. Check volume of solution in flask and reduce to a maximum of 500 ml. if necessary. If reduction is not required, vacuum should be reduced to a minimum of 15 inches mercury. This should prevent further occurences and after adhering to precaution in paragraph 5 (b), the flask can be returned to rotor and the procedure continued.*

(h) Remove the flask from the rotor shaft and pour asphalt into a 6 oz. tin.

NOTE: *When the flask is removed from the rotor shaft it is possible that the small "O" ring on the shaft will be removed with the flask. If this happens a glass rod may be used to remove the "O" ring from the mouth of the flask before the asphalt is poured into the tin.*

(i) Turn off the heat lamps.

(j) Asphalt is now ready for further testing.

Alternate Procedure

4. NOTE: *This procedure is required when the use of a centrifuge is necessary for extraction solutions containing fine aggregate material.*

(a) Pour the extraction solution into the 4000 ml. beaker.

(b) Heat at medium setting (#4) while stirring on the Hot Plate, until 400 to 500 ml. of the solution remains.

(c) Remove Stirring Bar and pour solution into a 1000 ml. beaker.

(d) Pour approximately equal amounts of the solution into centrifuge bottles as necessary. The filled centrifuge bottles must weigh within 1 gram of each other to properly balance the centrifuge. To bring the bottles to the correct weight add clean extracting solvent to the centrifuge bottles as needed.

(e) Place bottles in centrifuge so that they are properly balanced and run at 1800 rpm for approximately 45 minutes.

(f) Remove bottles and using funnel pour approximately 450 ml. of solution into the 1000 ml. round bottom flask. The solution must be carefully poured so that the fine aggregate material on the bottom of the centrifuge bottle is not disturbed.

(g) Wash inside mouth and top 1/2 of flask as in paragraph 3 (d) and follow original procedure to completion.

Precautions

5. (a) All work with extraction solution shall be done under a functioning fume hood.

(b) Flask should not be removed from rotor until the recovery of asphalt is complete. If it becomes necessary to remove the flask, the flask and the sample shall be allowed to cool, any asphalt inside mouth or top 1/2 of the flask washed down with a small amount of extracting solvent, and the volume checked to not exceed 500 ml. before being replaced on the rotor shaft. (This will prevent the material from being drawn into the vacuum line.)

(c) Temperatures of material in flask during recovery exceed 300° F. Recovery of asphalt which contains hazardous materials at this temperature, such as sulphur, shall not be attempted with this procedure.

RESIDUE BY EVAPORATION

(An Arizona Method)

SCOPE

1. (a) This method describes a rapid procedure for determining the percent of asphaltic residue in all types of emulsified bituminous materials.

(b) This test method may involve hazardous material, operations, or equipment. This test method does not purport to address all of the safety concerns associated with its use. It is the responsibility of the user to consult and establish appropriate safety and health practices and determine the applicability of any regulatory limitations prior to use.

(c) See Appendix A1 of the Materials Testing Manual for information regarding the procedure to be used for rounding numbers to the required degree of accuracy.

(d) Metric (SI) units and values are shown in this test method with English units and values following in parentheses. Values given for metric and English units may be numerically equivalent (soft converted) for the associated units, or they may be given as rounded or rationalized values (hard converted). Either the metric or English units along with their corresponding values shall be used in accordance with applicable specifications. See Appendix A2 of the Materials Testing Manual for additional information on the metric system.

APPARATUS

2. Requirements for the frequency of equipment calibration and verification are found in Appendix A3 of the Materials Testing Manual. Apparatus for this test procedure shall consist of the following:

(a) Small glass beaker or similar container.

(b) Ointment tins [180 mL (6 oz.)].

(c) Hot plate capable of maintaining temperatures of 163 °C (325 °F) maximum.

(d) Glass or metal stirring rod.

(e) A balance or scale capable of measuring the maximum weight to be determined and conforming to the requirements of AASHTO M 231, except the readability and sensitivity of any balance or scale utilized shall be at least 0.01 gram.

PRECAUTION

3. Care must be exercised in the use of apparatus and the handling of the tin so that material is neither lost nor additional material picked up. The use of the ointment tin lid serves as well as a clean place for resting the tin.

PROCEDURE

4. (a) Thoroughly mix the sample using stirring rod.

NOTE: It is very important that the sample be completely mixed, making certain to mix material clinging to bottom and sides of container into sample. A sample that has "separated" may be rendered homogeneous through continued stirring Never mix the sample by shaking. If a sample is received which has "broken", it shall be discarded and another sample obtained for testing.

(b) Pour approximately 25 grams of the mixed material into the glass beaker or similar container.

(c) Record weight of a 180 mL (6 oz.) ointment tin to the nearest 0.01 gram and place 5 ± 0.3 grams of material into the tin. Record weight of material in tin to the nearest 0.01 gram, as "A".

(d) Repeat procedure in paragraph (c) for 2 additional samples.

(e) Place the three samples on hot plate and slowly heat to a temperature that will prevent spattering or overcooking. [See Note following paragraph (g)].

(f) Heat samples at this temperature until the residue stops bubbling and appears smooth. This is an indication that the sample is nearing the end point (complete removal of water).

NOTE: Air bubbles should be removed occasionally by tapping tin on the hot plate or other hard surface and rotating the sample around the bottom of the tin. (Use of tongs or needle-nose pliers to handle tin is recommended.)

(g) Raise the temperature of samples to 163 °C (325 °F) maximum. This may be accomplished by raising the temperature of the hot plate or by placing samples on another hot plate. If an additional hot plate is used and bubbling occurs the samples shall be placed back on the lower temperature hot plate for a short period of time and then returned to the higher temperature hot plate.

NOTE: The temperatures required vary with the type of material being tested. When testing the "ERA" grade materials and emulsions with low viscosities the temperatures used will normally be near the boiling point of water. When testing higher viscosity materials the temperatures may approach the 163 °C (325 °F) maximum allowed. Care must be exercised for all materials to prevent spattering and overheating.

(h) Heat the samples until the first indication of smoking is detected, which shall be the determination of the removal of all water. (The use of a black background is useful in observing the point of smoking.)

NOTE: When testing "ERA - 1" grade materials, the determination of end point described in paragraph (h) shall not be used, rather when the material is free of all bubbles and has a completely translucent appearance.

(i) Remove samples from hot plate and allow to cool.

(j) Record the weight of each sample to the nearest 0.01 gram, as "B".

CALCULATION

5. (a) Determine percent residue of each sample by the equation below, and record results to the nearest 0.01%:

$$\text{Percent Residue} = \frac{B}{A} \times 100$$

Where: A = Weight of Sample Before Heating
B = Weight of Sample After Heating

Example:

$$\text{\% residue} = \frac{3.18}{5.02} \times 100 = 63.35\%$$

(b) Determine the average percent residue of the material being tested by the equation below, and record the results to the nearest 0.1%.

$$\text{Average \% Residue} = \frac{\text{(Sum of the 3 individual samples Percent Residue)}}{3}$$

Example:

(For 3 samples of 63.35%, 63.51%, and 63.68% residue)

$$\text{Average \% Residue} = \frac{(63.35 + 63.51 + 63.68)}{3} = 63.5\%$$

REPORT

6. The percent residue shall be reported to the nearest 0.1%.

July 15, 2005
(1 Page)

SERIES 600

CEMENT AND RELATED MATERIALS

The following test methods shall be performed in accordance with the respective designation:

AASHTO AND ASTM TEST METHODS:

TITLE	DESIGNATION AASHTO	DESIGNATION ASTM
Organic Impurities in Fine Aggregates for Concrete	T 21	
Effect of Organic Impurities in Fine Aggregate on Strength of Mortar	T 71	
Chemical Analysis of Hydraulic Cement	T 105	
Compressive Strength of Hydraulic Cement Mortar (Using 50 mm or 2-in. Cube Specimens)	T 106	
Autoclave Expansion of Portland Cement	T 107	
Normal Consistency of Hydraulic Cement	T 129	
Time of Setting of Hydraulic Cement by Vicat Needle …….	T 131	
Density of Hydraulic Cement	T 133	
Air Content of Hydraulic Cement Mortar	T 137	
Fineness of Portland Cement by Air Permeability Apparatus	T 153	
Mechanical Mixing of Hydraulic Cement Mortars of Pastes and Plastic Consistency	T 162	
Chemical Analysis of Limestone, Quicklime and Hydrated Lime		C 25
Physical Testing of Quicklime, Hydrated Lime and Limestone		C 110

NOTE: It shall be assured that the appropriate test methods as given in the project requirements are being adhered to.

December 15, 2006
(2 Pages)

SERIES 700

CHEMICAL AND SPECIALTY

The following test methods shall be performed in accordance with the respective designation:

ARIZONA TEST METHODS:

TITLE	DESIGNATION
Testing of Paint, Varnish, Lacquer, and Related Material….	ARIZ 702a
Sampling and Sieving of Crumb Rubber……...	ARIZ 714b
Heating and Drying Materials in Microwave Oven…….	ARIZ 719c
Tensile Proof Dowel Test……	ARIZ 725a
Reflectance, Dry Opacity, and Yellowness Index of Traffic Paint……...	ARIZ 726a
Chloride in Hardened Concrete……	ARIZ 727a
Exchangeable Sodium in Topsoil……..	ARIZ 729a
Geotextile Fabric Permittivity Measurement by the Falling Head Method……..….	ARIZ 730
Calcium Carbonate in Topsoil (Neutralization Potential of Topsoil)……..…..	ARIZ 732
Sulfate in Soils……..…….	ARIZ 733a
Determination of Portland Cement Content in Cement Treated Base Material……	ARIZ 734
Testing of Thermoplastic Pavement Marking Material……	ARIZ 735a
Chloride in Soils……...……..	ARIZ 736a
Chloride in Concrete Admixtures……	ARIZ 738

AASHTO & ASTM TEST METHODS:

TITLE	DESIGNATION AASHTO	DESIGNATION ASTM
Quality of Water To Be Used in Concrete	T 26	
Sampling and Testing Brick	T 32	
Preformed Expansion Joint Filler for Concrete Construction	T 42	
Weight of Coating on Zinc-Coated (Galvanized) Iron or Steel Articles	T 65	
Tension Testing of Metallic Materials	T 68	
Mechanical Testing of Steel Products	T 244	
Roundness of Glass Spheres		D 1155
Rubber Property - Durometer Hardness		D 2240
Joint Sealant, Hot Applied, Elastomeric-Type, for Portland Cement Concrete Pavements		D 3583
Rockwell Hardness and Rockwell Superficial Hardness of Metallic Materials		E 18

NOTE: It shall be assured that the appropriate test methods as given in the project requirements are being adhered to.

TESTING OF PAINT, VARNISH, LACQUER, AND RELATED MATERIAL

(A Modification of Federal Test Method Standard 141)

SCOPE

1. (a) This group of tests describes the procedures for routine chemical and/or physical testing of paints and the raw materials used in the manufacture of these organic protective coatings for surface preservation or marking of wood, metal, and/or masonry installations.

(b) This test method may involve hazardous material, operations, or equipment. This test method does not purport to address all of the safety concerns associated with its use. It is the responsibility of the user to consult and establish appropriate safety and health practices and determine the applicability of any regulatory limitations prior to use.

(c) See Appendix A1 of the Materials Testing Manual for information regarding the procedure to be used for rounding numbers to the required degree of accuracy.

(d) Metric (SI) units and values are shown in this test method with English units and values following in parentheses. Values given for metric and English units may be numerically equivalent (soft converted) for the associated units, or they may be given as rounded or rationalized values (hard converted). Either the metric or English units along with their corresponding values shall be used in accordance with applicable specifications. See Appendix A2 of the Materials Testing Manual for additional information on the metric system.

APPARATUS & REAGENTS

2. (a) Requirements for the frequency of equipment calibration and verification are found in Appendix A3 of the Materials Testing Manual. All apparatus shall conform to those specifications given in the respective tests.

(b) All reagents shall conform to the specifications of the Committee on Analytical Reagents of the American Chemical Society, where such specifications are available.

GENERAL

3. (a) Consistency - The determination of consistency of paint shall be as specified in ASTM Designation D 562, "Consistency of Paints Using the Stormer Viscosimeter."

(b) Drying Time - Determine the dry-to-touch and dry-hard times of paints by following the procedures specified in ASTM Designation D 1640, "Drying, Curing, or Film Formation of Organic Coatings at Room Temperature."

(c) Pigment Content - Follow ASTM Designation D 2371, "Pigment Content of Solvent-Reducible Paints," to determine percentage by weight. The remaining percentage may be considered as vehicle.

(d) Vehicle Composition - Follow ASTM Designation D 2621, "Infrared Identification of Vehicle Solids from Solvent-Reducible Paints."

(e) Density, kilograms per liter (pounds per gallon)

1) The apparatus shall consist of a smoothly finished aluminum, brass, stainless steel or plated cup provided with a snug-fitting, plug type cover having a small hole in its center. The capacity of the cup at 25.0 ± 0.5 °C shall be 83.2 ± 0.1 mL. The inside of the bottom of the cup shall be rounded. A convenient size for the apparatus is about 76 mm high by 38 mm in diameter. The cup shall be tared.

2) Pour the well-mixed paint, brought to a temperature of 25.0 ± 0.5 °C, into the cup until it is nearly full, put on the cover, rotate it firmly into place. Wipe off excess paint that exudes through the hole. Determine the weight of the sample to the nearest 0.1 gram. Multiply this weight by 0.012 to obtain the density in kilograms per liter (divide the weight of the sample by 10 to obtain the density in pounds per gallon).

3) This same procedure is applied for paste and semipaste, with care that all air pockets are removed from the material.

RAW MATERIALS, PIGMENTS

4. (a) White Pigments - Follow ASTM Designation D 34, "Chemical Analysis of White Pigments."

(b) Magnesium Silicate Pigments - Follow ASTM Designation D 717, "Analysis of Magnesium Silicate Pigment."

(c) Diatomaceous Silica - Follow ASTM Designation D 719, "Analysis of Diatomaceous Silica Pigment."

(d) Dry Red Lead - Follow ASTM Designation D 49, "Chemical Analysis of Dry Red Lead."

(e) Iron Oxide - Follow ASTM Designation D 50, "Chemical Analysis of Yellow, Orange, Red, and Brown Pigments Containing Iron and Manganese." Refer to Section 11 and 12 of same.

ALUMINUM PASTE

5. Follow ASTM Designation D 480, "Sampling and Testing of Flaked Aluminum Powders and Pastes," for the tests given below.

(a) Coarse Particles

(b) Easily Extracted Fatty and Oil Matter

(c) Nonvolatile Matter

SAMPLING AND SIEVING OF CRUMB RUBBER

(An Arizona Method)

SCOPE

1. (a) This method describes the procedure for sampling and determining the sieve analysis of crumb rubber.

(b) This test method may involve hazardous material, operations, or equipment. This test method does not purport to address all of the safety concerns associated with its use. It is the responsibility of the user to consult and establish appropriate safety and health practices and determine the applicability of any regulatory limitations prior to use.

(c) See Appendix A1 of the Materials Testing Manual for information regarding the procedure to be used for rounding numbers to the required degree of accuracy.

APPARATUS

2. Requirements for the frequency of equipment calibration and verification are found in Appendix A3 of the Materials Testing Manual. Apparatus for this test procedure shall consist of the following:

(a) Sieves for fine screening conforming to AASHTO Designation M 92, with a diameter of 8 inches, nested in sizes: #8, #10, #16, #30, #40, #50, #100, #200, and bottom pan.

(b) A balance or scale capable of measuring the maximum weight to be determined and conforming to the requirements of AASHTO M231, except the readability and sensitivity of any balance or scale utilized shall be at least 0.1 grams.

(c) Oven capable of maintaining a temperature of 140 ± 5 °F.

(d) A small riffle splitter with one-half inch openings.

(e) Mechanical sieve shaker which imparts a vertical, or lateral and vertical, motion to the sieves, causing the particles thereon to bounce and turn so as to present different orientations to the sieving surface.

(f) Splitting blanket of adequate size for approximately 1500 grams of crumb rubber.

(g) Talc (Talcum Powders) – Usually some mixture of magnesium silicate, silica, magnesium oxide, or magnesium-aluminum silicate. 100 percent of the particles shall pass a No. 200 sieve.

(h) A one-quart glass jar with large opening, and lid.

(i) Scoop, shovel, "sample thief" or other suitable device for obtaining samples.

SAMPLING

3. (a) Samples shall be obtained at the hot plant or CRA (Crumb Rubber Asphalt) blending unit from bags selected by the Engineer.

(b) The sample shall be obtained from the top of a randomly selected bag of crumb rubber, taken at a minimum of three random locations at least 3" below the surface, using a scoop, shovel, "sample thief", or other suitable device. The combined sample size shall be approximately 1500 grams.

(c) If the contractor suspects that segregation of the crumb rubber has occurred in the bag, the contractor may propose that the sample be obtained in a method which differs from that specified in paragraph 3(b) above. The proposed method of sampling must be approved by the Engineer and must render a representative sample. The sample shall be obtained by the contractor and witnessed by the Engineer.

SAMPLE PREPARATION

4. (a) Dry the approximate 1500 gram sample to constant mass at a temperature of 140 ± 5 °F.

(b) Spread the sample on the splitting blanket and break up clumps so that the material is free flowing.

(c) Mix the material thoroughly by turning the entire sample over several times in the splitting blanket.

(d) Obtain a representative 100 ± 10 gram test sample of the crumb rubber by splitting the entire sample through the splitter.

(e) Place the test sample in the jar, breaking up any clumps of material. Weigh the sample to the nearest 0.1 gram and record as "Preweight of Crumb Rubber".

(f) Add 5.0 grams of talc to the jar. Place the lid on the jar and mix sample thoroughly by manually shaking until the rubber and talc are uniformly mixed (a minimum of one minute). Weigh the combined rubber and talc to the nearest 0.1 gram and record as "Preweight of Crumb Rubber and Talc". Do not record this weight as "Corrected Dry Weight".

(g) Empty the sample of combined rubber and talc into the nest of sieves, thoroughly removing any material clinging to the jar and lid.

PROCEDURE

5. (a) Subject the test sample to mechanical sieving for 10 ± 0.5 minutes. In no case shall fragments be turned or manipulated through the sieves by hand. If there are clumps of material retained on any of the screens, break these apart, and recombine the rubber and talc from all the sieves and bottom pan; place the material in the jar, reshake, reweigh (recording new weight of combined rubber and talc), and resieve.

(b) Determine the weight retained on each sieve and the bottom pan and record to the nearest 0.1 gram. Any material adhering to the bottom of a screen shall be brushed into the next finer screen.

(c) Do not discard any of the sieved material until the sum of the individual weights retained is compared to the weight of the combined rubber and talc prior to sieving ("Preweight of Crumb Rubber and Talc"). If the difference between the two weights is less than or equal to 1.0% of the "Preweight of Crumb Rubber and Talc", an adjustment in weight shall be made on the sieve which has the largest weight retained, except no adjustment shall be made on the minus #200 material. If the difference is greater than 1.0%, discard this test sample and obtain another 100 ± 10 gram sample as specified in paragraph 4(d) and repeat the test.

CALCULATION

6. (a) If the weight of minus #200 material from sieving is 5.0 grams or less, record a zero as the minus #200 weight corrected for talc.

(b) If the weight of minus #200 material from sieving is greater than 5.0 grams, subtract 5.0 grams from it and record this difference as the minus #200 weight corrected for talc.

NOTE: The adjustments made in paragraphs 6(a) and 6(b) above are to account for the 5.0 grams of talc added to the sample.

(c) After determining the minus #200 weight corrected for talc as described above, determine the "Corrected Dry Weight" by adding the weights retained on sieve size #8, #10, #16, #30, #40, #50, #100, #200 and the minus #200 corrected for talc. Record this sum as the "Corrected Dry Weight".

(d) Determine the sieve factor for calculating the sieve analysis by dividing 100 by the "Corrected Dry Weight". Record the factor to at least six decimal places.

(e) The percent passing for each sieve is determined by multiplying the weight retained on that sieve by the factor, and subtracting the result from the unrounded % passing the next larger sieve. Values for "weight retained times the factor" and "percent passing each sieve" shall be determined and used in the calculations to at least six decimal places. The percent passing value for each sieve is recorded in the sieve analysis to the nearest whole percent, except the percent passing the #200 sieve (corrected for talc) is recorded to the nearest 0.1 percent.

(f) As a check on the sieve analysis, the weight of material passing the #200 (corrected for talc) is multiplied by the factor. The result of this calculation, rounded to the nearest 0.1 percent, should be the same as the value for the percent passing the #200 determined in the paragraph above.

(g) If desired, obtain the percent retained on each sieve by subtracting the rounded % passing value for that sieve from the rounded % passing value for the next higher sieve.

EXAMPLE

7. (a) Figure 1 is an example of the calculations when the weight of minus #200 material is 5.0 grams or less.

(b) Figure 2 is an example of the calculations when the weight of minus #200 material exceeds 5.0 grams.

(c) A blank Crumb Rubber Tabulation laboratory card is provided in Figure 3.

ARIZONA DEPARTMENT OF TRANSPORTATION
CRUMB RUBBER TABULATION

USE CAPITAL LETTERS

LAB NUMBER	ORG NUMBER	MATL	TYPE	PUR-POSE	TEST LAB	SIZE	SIZE %

TEST NO.	LOT OR SUFFIX	SAMPLED BY	MO	DAY	YEAR	TIME (MILITARY TIME)

SAMPLED FROM	LIFT NO.	RDWY	STATION (IF MILEPOST, INPUT DECIMAL)

ORIGINAL SOURCE	PROJECT ENGINEER / SUPERVISOR	PROJECT NUMBER	TRACS NUMBER

REMARKS

TYPE B CRUMB RUBBER

EXAMPLE

PREWEIGHT OF CRUMB RUBBER = 103.7

PREWEIGHT OF CRUMB RUBBER AND TALC = 108.7

SIEVE FACTOR

0.947867 = 100 / CORRECTED DRY WEIGHT

	WEIGHTS RETAINED	% RET.	% PASS	SPECS.
#8	0.0	0	100	
#10	0.0	0	100	100
#16	4.4	4	96	65-100
#30	52.2	50	46	20-100
#40	35.9	34	12	
#50	8.0	7	5	0-45
#100	3.7	4	1	
#200	1.3	1		
-#200	3.2			
Total	108.7			

CORRECTED FOR TALC

-#200	0.0	0.0	0-5
Total	105.5 (CORRECTED DRY WEIGHT)		

WHITE ☐
YELLOW ☐
BLUE ☐

RECEIVED DATE _____ TEST OPERATOR & DATE _____ SUPERVISOR & DATE _____

ADOT 44-9356 08/06

FIGURE 1

ARIZONA DEPARTMENT OF TRANSPORTATION
CRUMB RUBBER TABULATION

USE CAPITAL LETTERS

LAB NUMBER | ORG NUMBER | MATL | TYPE | PUR-POSE | TEST LAB | SIZE | SIZE %

TEST NO. | LOT OR SUFFIX | SAMPLED BY | MO | DAY | YEAR | TIME (MILITARY TIME)

SAMPLED FROM | LIFT NO. | RDWY | STATION (IF MILEPOST, INPUT DECIMAL)

ORIGINAL SOURCE | PROJECT ENGINEER / SUPERVISOR | PROJECT NUMBER | TRACS NUMBER

REMARKS

TYPE A CRUMB RUBBER

EXAMPLE

PREWEIGHT OF CRUMB RUBBER = 94.6

PREWEIGHT OF CRUMB RUBBER AND TALC = 99.6

SIEVE FACTOR

1.057082 = 100 / CORRECTED DRY WEIGHT

	WEIGHTS RETAINED	% RET.	% PASS	SPECS.
#8	0.0	0	100	100
#10	1.1	1	99	95-100
#16	90.2	96	3	0-10
#30	0.8	0	3	
#40	0.6	1	2	
#50	0.7	1	1	
#100	0.5	0	1	
#200	0.4	1		
-#200	5.3			
Total	99.6			

CORRECTED FOR TALC

-#200	0.3	✓0.3	
Total	94.6	CORRECTED DRY WEIGHT	

WHITE ☐
YELLOW ☐
BLUE ☐

RECEIVED DATE | TEST OPERATOR & DATE | SUPERVISOR & DATE

ADOT 44-9356 08/06

FIGURE 2

ARIZONA DEPARTMENT OF TRANSPORTATION
CRUMB RUBBER TABULATION

USE CAPITAL LETTERS

LAB NUMBER | ORG NUMBER | MATL | TYPE | PUR-POSE | TEST LAB | SIZE | SIZE %

TEST NO.. | LOT OR SUFFIX | SAMPLED BY | MO DAY YEAR | TIME (MILITARY TIME)

SAMPLED FROM | LIFT NO. | RDWY | STATION (IF MILEPOST, INPUT DECIMAL)

ORIGINAL SOURCE | PROJECT ENGINEER / SUPERVISOR | PROJECT NUMBER | TRACS NUMBER

REMARKS

PREWEIGHT OF CRUMB RUBBER =

PREWEIGHT OF CRUMB RUBBER AND TALC =

SIEVE FACTOR = 100 / CORRECTED DRY WEIGHT

	WEIGHTS RETAINED	% RET.	% PASS	SPECS.
#8				
#10				
#16				
#30				
#40				
#50				
#100				
#200				
-#200				
Total				

CORRECTED FOR TALC

-#200		
Total		CORRECTED DRY WEIGHT

WHITE
YELLOW
BLUE

RECEIVED DATE | TEST OPERATOR & DATE | SUPERVISOR & DATE

44-9356 08/06

FIGURE 3

HEATING AND DRYING MATERIALS IN MICROWAVE OVEN

(An Arizona Method)

SCOPE

1. (a) This method describes the procedure for the heating, drying, and/or determining moisture content of soils and aggregates, and bituminous mixtures utilizing a microwave oven.

(b) This test method may involve hazardous material, operations, or equipment. This test method does not purport to address all of the safety concerns associated with its use. It is the responsibility of the user to consult and establish appropriate safety and health practices and determine the applicability of any regulatory limitations prior to use.

(c) See Appendix A1 of the Materials Testing Manual for information regarding the procedure to be used for rounding number to the required degree of accuracy.

APPARATUS

2. Requirements for the frequency of equipment calibration and verification are found in Appendix A3 of the Materials Testing Manual. Apparatus for this test procedure shall consist of the following:

(a) Microwave oven capable of variable heat intensity settings. When heating and drying aggregates that have been extracted from bituminous mixtures, proper ventilation of fumes from oven exhaust fan shall be provided. The microwave oven shall be operated in accordance with the manufacturer's instructions.

(b) Sample containers suitable for microwave use.

(c) A balance or scale capable of measuring the maximum weight to be determined and conforming to the requirements of AASHTO M 231, except the readability and sensitivity of any balance or scale utilized shall be at least 0.1 gram.

HEATING AND DRYING SOILS AND AGGREGATE SAMPLES

3. The heating and drying of soils and aggregates is controlled by the intensity of heat generated that prevents aggregate breakage and sample splattering. When the percent moisture is determined, the method used with a microwave oven shall give results similiar to those achieved with a conventional oven. In case of dispute, a conventional oven shall be utilized in accordance with the applicable AASHTO test method, T 255 "Total Moisture Content of Aggregate by Drying", or T 265 "Laboratory Determination of Moisture Content of Soils".

(a) The following describes the method for drying samples of soils and aggregates to constant weight.

1) Record the tare weight of a suitable size container to the nearest 0.1 gram. Place sample in container and determine and record the wet weight of sample to the nearest 0.1 gram.

2) Dry sample until a constant weight is obtained. The sample is considered to be at constant weight when further drying causes, or would cause, a difference in weight of not more than 0.1 gram.

(b) After the sample has been dried to constant weight, the percent moisture, if desired, is determined as follows:

1) Cool container and sample to room temperature. Determine and record the dry weight of sample to the nearest 0.1 gram.

2) Calculate and record the percent moisture to the nearest 0.1% by the following:

$$\% \text{ moisture} = \frac{(\text{wet weight}) - (\text{dry weight})}{(\text{dry weight})} \times 100$$

HEATING AND DRYING BITUMINOUS MIXTURES

4. Bituminous mixtures shall be heated in such a manner that controls the intensity of heat generated to prevent splattering, aggregate breakage, and asphalt being "burned off".

(a) The determination of constant weight and percent moisture, if desired, shall be determined in accordance with Arizona Test Method 406.

TENSILE PROOF DOWEL TEST

(An Arizona Method)

SCOPE

1. (a) This test method covers the determination of the tensile force necessary to break the bond between a steel reinforcing bar and portland cement concrete when utilizing an epoxy adhesive, under defined procedures for preparation, conditioning, and testing.

(b) Tensile strength is the maximum tensile load carried by the test specimen during a tension or pull-out test. The results are expressed in Newtons (pounds force).

(c) This test method may involve hazardous material, operations, or equipment. This test method does not purport to address all of the safety concerns associated with its use. It is the responsibility of the user to consult and establish appropriate safety and health practices and determine the applicability of any regulatory limitations prior to use.

(d) See Appendix A1 of the Materials Testing Manual for information regarding the procedure to be used for rounding numbers to the required degree of accuracy.

(e) Metric (SI) units and values are shown in this test method with English units and values following in parentheses. Values given for metric and English units may be numerically equivalent (soft converted) for the associated units, or they may be given as rounded or rationalized values (hard converted). Either the metric or English units along with their corresponding values shall be used in accordance with applicable specifications. See Appendix A2 of the Materials Testing Manual for additional information on the metric system.

APPARATUS

2. Requirements for the frequency of equipment calibration and verification are found in Appendix A3 of the Materials Testing Manual. Apparatus for this test procedure shall consist of the following:

(a) A rotary hammer drill with a 25.4 mm (1 inch) drill bit.

(b) Testing Machine, capable of maintaining a specified rate of loading and comprised of essentially the following:

1) Fixed Member - The upper member of the machine has grips for holding the test specimen in the machine. These grips shall secure the reinforcing bar in such a way that the concrete cylinder shall move into a seating alignment as soon as a load is applied.

2) Movable Member - This seating alignment shall bring the concrete cylinder into a uniform bearing against a steel plate that bears against the bottom of the movable or lower member.

MATERIALS

3. (a) The concrete cylinder shall be a 152.4 x 304.8 mm (6 x 12 inch) concrete cylinder fabricated according to AASHTO T 23 (ASTM C 31). The concrete utilized to fabricate the cylinder shall have a minimum compressive strength of 40 MPa (6000 psi) when tested in accordance with Arizona Test Method 314.

(b) The reinforcing bar shall be No. 20M (No. 6), conforming to the requirements of AASHTO M 31 (ASTM A 615) Grade 60, with a length of 815 mm (32 inches).

(c) The epoxy adhesive product, prepared according to the manufacturer's recommendations.

PREPARATION

4. (a) A 25.4 mm (1 inch) diameter hole is drilled in the center and parallel to the principal axis of the cylinder to a depth that will accommodate a full 150 mm (6 inches) of reinforcing bar. Compressed oil-free air shall be used to purge drill dust from the hole. Then, water under pressure along with a bottle brush will be used to flush out any remaining particles. Water under pressure will be continuously applied to the hole until the rinse water turns clear. Then the cylinder is moved to a storage area and set up side down to allow any free moisture to drain away. The cylinder will be dry before any epoxy adhesive is applied in fabricating the test specimen.

(b) If a low or medium viscosity epoxy is used, pour a sufficient quantity of epoxy into the hole, such that when a square end of reinforcing bar is pushed to the full depth of the drilled hole, the epoxy shall reach the top of the hole. A small amount of excess material extruded will be acceptable. The reinforcing bar should be rotated approximately one to three revolutions in an effort to more uniformly distribute the epoxy adhesive over the reinforcing bar and the wall of the drill hole.

(c) If a high viscosity or non-sag epoxy is used, use a spatula or putty knife in the application of the epoxy to place a sufficient quantity of the material into the drill hole. In addition, the length of reinforcing bar that is to be embedded, should be coated with epoxy before the square end of the reinforcing bar is inserted into the drill hole. A small amount of excess material extruded will be acceptable. The reinforcing bar should be rotated approximately one to three revolutions in an effort to more uniformly distribute the epoxy adhesive over the reinforcing bar and the wall of the drill hole.

(d) If a glass self-contained epoxy adhesive capsule is used, one end of the reinforcing bar shall be chisel pointed. The other end of the bar will have a square end, which shall be fitted into an attachent on a rotary hammer drill. The glass capsule shall be inserted into the drill hole and the reinforcing bar with the chisel point is then driven into the drill hole. The reinforcing bar shall be driven to the full depth of the drilled hole or refusal.

TEST SPECIMEN

5. Each test specimen shall consist of a fully assembled 152.4 mm (6 inch) diameter concrete cylinder with the rebar bonded within utilizing the epoxy adhesive product submitted for evaluation. The test shall consist of performing testing on two test specimens; one being tested at one day, and the other at three days, unless other time periods are agreed upon.

CONDITIONING

6. The conditioning of the test specimens shall be maintained, until such time as the tests are conducted, at a temperature of 24 ± 4 °C (75 ± 7 °F) and a relative humidity of 50 ± 2 percent.

PROCEDURE

7. (a) Place the test specimen in the test machine so the grips fully engage the reinforcing bar, while taking care to align the concrete cylinder and the bearing plate so that they will bear uniformly against the lower or movable member. The application of the tensile loading should begin as quickly as possible. An initial loading of 22 kN (5000 pounds force) shall be applied to the test sample. Loading shall then be applied at a rate of movement which corresponds to a loading rate within the range of 22 to 27 kN/minute (5000 to 6000 pounds force/minute) to failure.

(b) Record the maximum load carried by the test specimen at failure, to the nearest 450 N (100 pounds force).

(c) Record the type of failure that occurred. This will be based on a visual inspection. (See Note below).

NOTE: Adhesive failure refers to the lack of bond obtained by observing how much of a failure has occurred in the epoxy adhesive being in contact with the surfaces to be bonded, poor distribution of epoxy material. Concrete tensile failure could be described as being a complete failure that is preceded by developing a shallow surface cone.

REFLECTANCE, DRY OPACITY, AND YELLOWNESS INDEX OF TRAFFIC PAINT

(An Arizona Method)

SCOPE

1. (a) This method is used for integrated testing of traffic paints for their reflectance properties. It is applied primarily in testing water-borne white and yellow traffic paints. Yellowness Index is determined on white traffic paints.

(b) This test method may involve hazardous material, operations, or equipment. This test method does not purport to address all of the safety concerns associated with its use. It is the responsibility of the user to consult and establish appropriate safety and health practices and determine the applicability of any regulatory limitations prior to use.

(c) See Appendix A1 of the Materials Testing Manual for information regarding the procedure to be used for rounding numbers to the required degree of accuracy.

(d) Metric (SI) units and values are shown in this test method with English units and values following in parentheses. Values given for metric and English units may be numerically equivalent (soft converted) for the associated units, or they may be given as rounded or rationalized values (hard converted). Either the metric or English units along with their corresponding values shall be used in accordance with applicable specifications. See Appendix A2 of the Materials Testing Manual for additional information on the metric system.

APPARATUS

2. Requirements for the frequency of equipment calibration and verification are found in Appendix A3 of the Materials Testing Manual. Apparatus for this test procedure shall consist of the following:

(a) Black and white opacity charts - Leneta, form 2C.

(b) 0.25 mm (10 mil) doctor blade, 101.6 mm (4 inch) width.

(c) 0.38 mm (15 mil) doctor blade, 101.6 mm (4 inch) width.

(d) Photovolt 577 reflectance meter with "T" search unit.

PREPARATION OF TEST SPECIMENS (PAINT FILMS)

3. Two test films, on separate charts, are prepared for each paint sample as follows:

(a) Apply a bead of paint approximately 50.8 mm (2 inches) long and 5 milliliters in volume across the top of the upper (black) portion of a chart.

(b) Draw the paint down across both portions of the chart (black and white) using the 0.25mm (10 mil) doctor blade.

(c) Repeat, steps 3(a) and 3(b) using a bead of approximately 10 milliliters volume and the 0.38 (15 mil) doctor blade.

(d) Prior to testing, allow the test specimens to dry for a minimum of 24 hours at 25 ± 5 °C (77 ± 9 °F).

SETUP AND CALIBRATION OF REFLECTANCE METER

4. After an initial warmup time of a minimum of 30 minutes, calibrate the meter for use on the applicable filter channels (green "G", amber "A", and/or blue "B") as follows:

(a) Load the green filter in the filter rack of the "T" search unit and rotate the rack until the filter is in front of the lens.

(b) Select the green memory location by depressing the "G" button on the front face of the meter.

(c) Place the black cavity standard on the head of the search unit.

(d) Set the dark current (zero offset) by depressing first the "CHANGE" button and then the "ZERO" button on the face of the meter.

(e) Place the Photovolt ceramic reflectance standard plaque on the head of the search unit.

(f) Enter the standard reflectance value for the green filter on the meter display, by depressing first the "CHANGE" button, then the "STD" button, and finally, the "A", "B", and "G" buttons as necessary to increment the tens, units, and tenths digits respectively until the value is displayed. Then depress the "STD" button again. The standard reflectance value for the green filter is now stored in the memory, and the meter is now calibrated on the green filter channel.

(g) If reflectance data is to be obtained for a white paint sample, repeat steps 4(a) through 4(f) for the amber filter channel and again for the blue filter channel.

(h) For each channel used, immediately prior to obtaining reflectance data for paint samples, the calibration will be checked and, if necessary, corrected. First replace the black cavity standard on the head of the search unit and if drift has occurred, depress the "CHANGE" button and then the "ZERO" button. Next replace the standard plaque on the head of the search unit and if drift has occurred, depress the "CHANGE" button, and then depress the "STD" button twice.

MEASURING AND RECORDING REFLECTANCE DATA

5. (a) Obtain reflectance data for a white paint sample as follows:

1) After set up of the meter on the green filter channel, check and correct the calibration as described in paragraph 4(h). Measure the reflectance of the 0.25 mm (10 mil) specimen over the black and white portions of the chart. Record the results in the appropriate boxes of the reflectance data worksheet. (See Figure 1 for an illustration of a blank worksheet.) Then measure the reflectances of the 0.38 mm (15 mil) specimen over both portions of the chart and record similarly.

2) After set up of the meter on the amber filter channel, check and correct the calibration as described in paragraph 4(h). Measure and record reflectances of the 0.38 (15 mil) specimen over both the black and the white portion of the chart.

3) Repeat step 5(a)(2), on the blue channel.

(b) Obtain reflectance data for a yellow paint sample as in step 5(a)(1).

CALCULATING AND REPORTING REFLECTANCE PROPERTIES

6. (a) Report "Reflectance" of a white or yellow paint as the reflectance of the 0.38 mm (15 mil) specimen on the green channel over the white portion of the chart.

(b) Calculate and report "Dry Opacity" of a white or yellow paint as the ratio of reflectance of the 0.25 mm (10 mil) specimen over the black portion of the chart to the reflectance of the same over the white portion, both reflectances being measured on the green channel.

(c) Calculate and report "Yellowness Index" of a white paint according to the following formula: (Yellowness Index does not apply to a yellow paint.)

$$\text{Yellowness Index} = \frac{\text{Amber - Blue}}{\text{Green}} \times 100$$

Where: Amber, Blue, and Green are the measured reflectances of the 0.38 mm (15 mil) specimen over the white portion of the chart on the respective filter channels.

NOTE: Any reflectance and yellowness index properties derived from measurements made over the black portions of the charts are for informational purposes only.

REFLECTANCE DATA WORKSHEET

DATE _____ OPERATOR _____

SERIAL #	1		2		3		4		5		6	
BATCH #												
COLOR												
BACKGROUND	BLACK	WHITE	BLACK	WHITE	BLACK	WHITE	BLACK	WHITE	BLACK	WHITE	BLACK	WHITE
0.25 mm (10 mil) GREEN (G_1)												
DRY OPACITY (BLACK/WHITE)												
0.38 mm (15 mil) GREEN (G_2) REFLECTANCE												
0.38 mm (15 mil) AMBER (A)												
0.38 mm (15 mil) BLUE (B)												
YELLOWNESS INDEX (ON WHITE PAINT) $\frac{A - B}{G_2}(100)$												

FIGURE 1

CHLORIDE IN HARDENED CONCRETE

(An Arizona Method)

SCOPE

1. (a) This method covers the determination of chloride in concrete by a standard addition technique using a chloride electrode. Use of the standard addition technique minimizes the effects of interferences in the samples. "Total Chloride" is obtained by an acid digestion, and "Available Chloride" by water leaching of the concrete sample.

(b) This test method involves hazardous material, operations, or equipment. This test method does not purport to address all of the safety concerns associated with its use. It is the responsibility of the user to consult and establish appropriate safety and health practices and determine the applicability of regulatory limitations prior to use.

(c) See Appendix A1 of the Materials Testing Manual for information regarding the procedure to be used for rounding numbers to the required degree of accuracy.

(d) Metric (SI) units and values are shown in this test method with English units and values following in parentheses. Values given for metric and English units may be numerically equivalent (soft converted) for the associated units, or they may be given as rounded or rationalized values (hard converted). Either the metric or English units along with their corresponding values shall be used in accordance with applicable specifications. See Appendix A2 of the Materials Testing Manual for additional information on the metric system.

REAGENTS

2. (a) Chloride standard solution, 1.000 mg/mL, (weigh 1.648 grams dried primary standard Sodium Chloride, and dilute to 1 liter with deionized water).

(b) Nitric acid, 12%. **Caution must be exercised in preparing this solution.** Measure 120 mL concentrated Nitric acid, slowly pour into a 1 liter (1000mL) beaker or flask with approxiamately 500 mL deionized water. Then, fill with deionized water to make 1 liter solution.

(c) Deionized water.

APPARATUS

3. Requirements for the frequency of equipment calibration and verification are found in Appendix A3 of the Materials Testing Manual. Apparatus for this test procedure shall consist of the following:

(a) 300 mL Tall-Form beakers, calibrated to indicate 100 mL volume, with watch glasses.

(b) An analytical balance capable of measuring the maximum weight to be determined and conforming to the requirements of AASHTO M 231, except the readability and sensitivity of any balance utilized shall be at least 0.001 gram.

(c) Whatman # 43 filter paper, or equivalent.

(d) Low temperature hot plate.

(e) Magnetic stirrer and stirring bar.

(f) Orion 94-17 chloride electrode with Orion 90-01 reference electrode, or equivalent combination.

(g) Orion EA 940 specific ion meter, or equivalent.

(h) 1 mL pipette, accurate to 0.01 mL.

(i) Thermometer, accurate to at least 0.5 °C.

PROCEDURE

4. (a) Weigh a 1.000 gram representative homogeneous sample of finely pulverized concrete into a beaker. The sample should preferably pass a 75 μm (No. 200) sieve. If "ΔE", as calculated in paragraph 4(j), is less than 18 millivolts (or if "C_0", as calculated in paragraph 5(a), is equal to or greater than 0.010 mg/mL), the procedure shall be repeated using a smaller sample, recording the sample weight to the nearest 0.001 gram.

(b) To the beaker, add 25 mL nitric acid for "Total Chloride" or 25 mL deionized water for "Available Chloride", and cover with watch glass.

(c) Heat at a temperature just below the boiling point for 20 minutes, occasionally swirling solution. Do not allow solution to boil.

(d) Filter into a clean beaker and wash thoroughly using approximately 50 mL of deionized water.

(e) Dilute filtrate to 100 mL with deionized water. This is the "reading solution". Adjust solution temperature to 25 ± 0.5 °C and maintain at that temperature throughout remainder of test.

(f) Place stirring bar in beaker, place beaker on magnetic stirrer, insert electrodes, and initiate stirring. Stirring shall be at a constant moderate rate, such that the vortex created by stirring does not expose the tips of the immersed electrodes. The rate of stirring and the temperature (25 ± 0.5 °C) shall be constant throughout the remainer of the procedure, until the final reading has been obtained in paragraph (i) below.

(g) After reading has stabilized, record initial reading to the nearest millivolt as "E_1".

(h) Add 1.00 mL chloride standard solution.

(i) After reading has stabilized, record final reading to the nearest millivolt as "E_2".

(j) Calculate $\Delta E = E_1 - E_2$.

(k). Repeat steps (b) through (j) on a reagent blank in a clean beaker.

CALCULATIONS AND REPORT

5. (a) Calculate chloride concentration, "C_o" in sample reading solution and "C_b" in reagent blank reading solution, and record each to the nearest 0.001 mg/mL, by the following. (The formula is derived from the Nernst equation for a specific ion electrode. The relation holds in dilute solutions. See Appendix.)

$$C_o \text{ or } C_b = \frac{1}{(101)\,10^{(\Delta E/S)} - 100}$$

Where: $\Delta E = E_1 - E_2$

S = Electrode slope at 25 ± 0.5 °C as determined in accordance with manufacturer's recommendations. (The slope "S" should equal approximately 59 millivolts for a properly functioning electrode. See Section 6, Appendix.)

(b) Calculate percent chloride concentration in concrete, "C" (Total Chloride or Available Chloride), and report to the nearest 0.001%, by the following:

$$C = \frac{10\ (C_o - C_b)}{\text{Sample Wt.}}$$

APPENDIX

6. (a) The derivation of the formula for "C_o" and "C_b", the concentration of chloride in the reading solutions, is as follows:

(1) The chloride sensing electrode's behavior is given by the Nernst equation:

$$E = E_o - S\,[\log(kC)] = E_o - 2.303\frac{RT}{F}[\log(kC)]$$

Where: E = the measured electrode potential in volts (difference of potential between chloride electrode and reference electrode).

E_o = the standard electrode potential.

S = 2.303RT/F = the electrode slope. The theoretical value of "S" is given by:

$$2.303\ \frac{8.314\frac{\text{volt}\cdot\text{coul}}{°\text{K}}298\ °\text{K}}{96500\ \text{coul}} = 0.059\ \text{volt}$$

C = the chloride concentration in the reading solution in mg/mL.

k = a constant which converts concentration to activity.

(2) For initial reading "E_1" = E_o - S [log (kC_1)]
and final reading "E_2" = E_o - S [log (kC_2)]

$$\Delta E = E_1 - E_2 = S\,[\log (C_2/C_1)]$$

or $$\frac{C_2}{C_1} = 10^{(\Delta E/S)}$$

Since $$C_2 = \frac{C_1V_1 + C_SV_S}{V_1 + V_S}$$

Where:
C_2 = final chloride concentration in mg/mL
C_1 = initial chloride concentration in mg/mL
V_1 = initial volume = 100 mL
C_S = standard chloride concentration = 1 mg/mL
V_S = volume of chloride standard solution added = 1 mL

then $$\frac{C_2}{C_1} = \frac{C_1 V_1 + C_S V_S}{C_1(V_1 + V_S)} = 10^{(\Delta E/S)}$$

or $$C_1 V_1 + C_S V_S = C_1 (V_1 + V_S) 10^{(\Delta E/S)}$$

or $$C_S V_S = C_1 \left[(V_1 + V_S) 10^{(\Delta E/S)} - V_1 \right]$$

Therefore $$C_1 = \frac{C_S V_S}{(V_1 + V_S)\, 10^{(\Delta E/S)} - V_1}$$

and $$C_o \text{ or } C_b = \frac{1}{(101)\, 10^{(\Delta E/S)} - 100}$$

(b) The formula for "C" (percent "Total Chloride" or "Available Chloride" concentration in concrete) is as follows:

$$C = \frac{\left[C_o\,(mg/mL) - C_b\,(mg/mL)\right](100\ mL)\left[\frac{1\ g}{1000\ mg}\right]}{\text{Sample Weight (g)}} \times 100$$

$$C = \frac{10\,(C_o - C_b)}{\text{Sample Wt.}}$$

EXCHANGEABLE SODIUM IN TOPSOIL

(An Arizona Method)

SCOPE

1. (a) This test method is used to compare or qualify topsoil for cultivation of plants insofar as the proportion of exchangeable sodium among the four major cations (Sodium, Potassium, Calcium, and Magnesium) is related to plant welfare. "Exchangeable" is defined by the method itself and is based on the exchange of ammonium ion from the reagent Ammonium Acetate Solution with the four major cations under the conditions given by the method. The four cations are brought into solution by the reagent and their concentrations in solution are determined by Atomic Absorption or Flame Emission Spectrophotometry.

(b) This test method may involve hazardous material, operations, or equipment. This test method does not purport to address all of the safety concerns associated with its use. It is the responsibility of the user to consult and establish appropriate safety and health practices and determine the applicability of any regulatory limitations prior to use.

(c) See Appendix A1 of the Materials Testing Manual for information regarding the procedure to be used for rounding numbers to the required degree of accuracy.

(d) Metric (SI) units and values are shown in this test method with English units and values following in parentheses. Values given for metric and English units may be numerically equivalent (soft converted) for the associated units, or they may be given as rounded or rationalized values (hard converted). Either the metric or English units along with their corresponding values shall be used in accordance with applicable specifications. See Appendix A2 of the Materials Testing Manual for additional information on the metric system.

APPARATUS

2. Requirements for the frequency of equipment calibration and verification are found in Appendix A3 of the Materials Testing Manual. Apparatus for this test procedure shall consist of the following:

(a) 1.70 mm (No. 12) sieve.

(b) A balance or scale capable of measuring the maximum weight to be determined and conforming to the requirements of AASHTO M 231, except the readability and sensitivity of any balance or scale utilized shall be at least 0.01 gram.

(c) Plastic vials, 44.45 mm (1-3/4 inch) wide x 76.2 mm (3 inches) tall, with caps.

(d) Reciprocating shaker capable of 180 cycles per minute, with carrier for holding vials in place.

(e) Sodium-free quantitative filter paper, 11 cm diameter.

(f) 10 mL volumetric pipette, accurate to ± 0.05 mL.

(g) Atomic Absorption or Flame Emission Spectrophotometer capable of determining Sodium, Potassium, Calcium, and Magnesium, with high-solids burner head and nitrous oxide acetylene flame capability.

(h) 40 mL volumetric pipette, accurate to ± 0.05 mL.

(i) 5 mL graduated pipette, accurate to ± 0.05 mL.

REAGENTS

3. (a) Ammonium Acetate Solution, 1 Normal. (Measure 57 mL reagent glacial acetic acid into a 1 liter volumetric flask and dilute to 500 mL with deionized water. Add 69 mL reagent concentrated ammonium hydroxide. Dilute to approximately 950 mL with deionized water and mix. Adjust pH to 7.0 using glacial acetic acid or ammonium hydroxide dropwise as necessary. Dilute to the mark with deionized water.)

(b) Sodium Stock Solution, 1000 mg/liter, (available as calibration standard solution from chemical manufacturers).

(c) Potassium Stock Solution, 1000 mg/liter, (available as calibrated standard solution).

(d) Calcium Stock Solution, 1000 mg/liter, (available as calibrated standard solution).

(e) Magnesium Stock Solution, 1000 mg/liter, (available as calibrated standard solution).

PROCEDURE

4. (a) Weigh 2.00 grams of soil, passing a 1.70 mm (No. 12) sieve into a plastic vial.

(b) Pipette 40.0 mL Ammonium Acetate Solution into the vial, and cap it.

(c) Place vial on reciprocating shaker, start shaking at 180 cycles per minute and shake exactly 5 minutes.

(d) Immediately filter into a clean vial. (The folded filter paper can be placed on the rim of the vial instead of using a funnel.) Cap the vial. This is the Original Extract Solution.

(e) Pipette 10 mL of Original Extract Solution into a 100 mL volumetric flask and dilute to the mark with Ammonium Acetate Solution. This is the Diluted Extract Solution.

(f) Prepare a set of three Spectrophotometry Standard Solutions with concentrations of 10.0 mg/liter, 25.0 mg/liter, and 50.0 mg/liter of Sodium by pipetting 1.0 mL, 2.5 mL, and 5.0 mL respectively of Sodium Stock Solution into each of three 100 mL volumetric flasks and diluting to the mark with Ammonium Acetate Solution.

(g) Repeat step 4(f) for Potassium, for Calcium, and for Magnesium, thus preparing a total of twelve Spectrophotometry Standard Solutions.

(h) Perform an Atomic Absorption or Flame Emission Spectrophotometric analysis using the Original Extract Solution, the Diluted Extract Solution, and the Spectrophotometry Standard Solutions as necessary to optimize accuracy on the basis of sensitivity, linearity, and variance of instrument response using Ammonium Acetate Solution as the blank. (The instrumental parameters, given in the table below are recommended for the analysis.) Determine the concentration of each of the four cations in the Original Extract Solution to the nearest 0.1 mg/liter.

ELEMENT	WAVE LENGTH	SLIT	FLAME	BURNER
Sodium	589.2	0.7	Air-Acetylene	3 Slot
Potassium	766.5	0.7	Air-Acetylene	3-Slot
Calcium	422.7	0.7	N_2O-Acetylene	N_2O
Magnesium	285.2	0.7	N_2O-Acetylene	N_2O

CALCULATIONS

5. (a) Calculate the concentration of exchangeable cations in milliequivalents per 100 grams (meq /100 g) of soil using the following formulas:

$$C'_{Na} \text{ (in meq/100 g)} = (0.087) \times (C_{Na})$$

$$C'_{K} \text{ (in meq/100 g)} = (0.051) \times (C_{K})$$

$$C'_{Ca} \text{ (in meq/100 g)} = (0.100) \times (C_{Ca})$$

$$C'_{Mg} \text{ (in meq/100 g)} = (0.165) \times (C_{Mg})$$

Where: C_{Na}, C_K, C_{Ca}, or C_{Mg} is the concentration of each cation, in mg/liter, respectively in the Original Extract Solution.

(b) Compute the total Cation Exchange Capacity (CEC) of the soil, which is the sum of the four exchangeable cation concentrations, as follows:

$$\text{CEC (in meq/100 g)} = C'_{Na} + C'_{K} + C'_{Ca} + C'_{Mg}$$

(c) Compute the Exchangeable Sodium Percentage (ESP), which is the exchangeable sodium proportion of the total Cation Exchange Capacity as follows:

$$\text{ESP} = \frac{C'_{Na}}{\text{CEC}} \times 100$$

(d) Compute the Exchangeable Sodium (ES) in the soil, in parts per million, using the following formula:

$$\text{ES (in ppm)} = (20) \times (C_{Na})$$

REPORT

6. (a) Report Exchangeable Sodium Percentage (ESP) to the nearest 0.1 percent.

(b) Report Exchangeable Sodium (ES) to the nearest 1.0 ppm.

GEOTEXTILE FABRIC PERMITTIVITY MEASUREMENT BY THE FALLING HEAD METHOD

(An Arizona Method)

SCOPE

1. This procedure provides for the determination of the permittivity for a geotextile fabric sample as determined by a falling head permeameter test.

APPARATUS

2. The apparatus shall consist of the following:

(a) Falling head fabric permeameter consisting of a 2 inch (5.08 cm) inside diameter Plexiglas standpipe with a cross-sectional area of 20.27 cm^2 above a fabric sample placed over a 1 inch (2.54 cm) diameter orifice, to provide a cross-sectional area of flow through the test fabric of 5.07 cm^2. The water entry port shall be below the orifice for the sample. (See Figure 1).

(b) Water supply with tubing and shutoff valve to provide water into the standpipe.

(c) Fabric thickness gauge that meets the requirements outlined in ASTM D1777.

(d) Celsius thermometer for water temperature measurement.

(e) Stopwatch with measurement to the nearest tenth of a second.

(f) Rubber gasket of approximately, but not less than, the thickness of the fabric to be tested. The gasket shall have an opening in the center with a diameter of 10 cm, and an outside diameter of approximately 15 cm.

(g) Large plastic ball water release valve with lever at the base of the standpipe, just below the water entry port.

SAMPLE PREPARATION

3. (a) Cut a circular fabric sample to fit the opening of the rubber gasket (10 cm diameter).

(b) Measure and record the thickness of the fabric sample according to the procedure outlined in ASTM D1777

(c) Place the fabric sample on the bottom flange of the permeameter, and place a rubber gasket of appropriate thickness around the fabric.

(d) Position the bottom portion of the permeameter, with fabric and gasket in place, at the base of the standpipe and secure the bottom flange against the top flange with clamps. Place a container, of adequate size to catch released water, below the permeameter outlet.

TEST PROCEDURE

4. (a) The object of this procedure is to determine the time required for water to travel through the fabric as the height of the water column is reduced from h_0 to h_1.

(b) The values for h_0 and h_1 in this test procedure are 20 cm and 10 cm respectively above the fabric sample. These low head levels are specified to provide water flow characteristics within or close to the laminar range.

(c) The elapsed time (t) for the (h_0 - h_1) condition is determined as follows.

(d) With the sample in place and the water release valve in the closed position, fill the standpipe with water through the water entry port below the flange, until a water level of 10 to 15 cm above the desired starting height of h_0 (20 cm) is achieved, then shut off the water supply valve.

(e) Tap the assembly gently a few times to release any trapped air bubbles from the system.

(f) Open the water release valve and watch the water level fall toward the starting height of 20 cm.

(g) When the water level reaches the starting height of 20 cm, immediately start the timer and continue to watch the water level fall toward the ending height of 10 cm.

(h) When the water level reaches the ending height of 10 cm, immediately stop the timer.

(i) If further tests are desired, close the water release valve, otherwise allow the water to flow completely out of the standpipe.

(j) Record the time (t) from the stopwatch.

(k) Repeat the procedure given in paragraphs (c) through (j) above an additional three times, and calculate an average time (t_a) for the geotextile fabric sample.

(l) Measure and record the temperature of the water which flowed out of the standpipe.

CALCULATIONS

5. Calculate the permittivity of the geotextile fabric sample according to the following equation:

$$\text{Permittivity} = \left\{ \left[\frac{a}{A \cdot t_a} \right] \ln (h_0 / h_1) \right\} R_t$$

Where: a = cross-sectional area of standpipe (cm^2)

A = cross-sectional area of orifice (cm^2)

t_a = time in seconds for flow from h_0 to h_1

h_0 = starting water level

h_1 = ending water level

R_t = water temperature correction factor

The water temperature correction factor R_t is determined from the graph shown in Figure 2 based on the water temperature measured previously. When the temperature of the water is 20 degrees C, the correction factor is 1. A higher temperature results in a correction factor below 1 since the viscosity of water decreases with temperature. This lower viscosity would result in higher water flow through the fabric.

For the apparatus described in this test procedure, the equation becomes:

$$\text{Permittivity} = \left[\frac{2.7712}{t_a}\right] R_t$$

REPORT

6. The permittivity shall be reported to at least the nearest three decimal places.

FALLING HEAD FABRIC PERMEAMETER

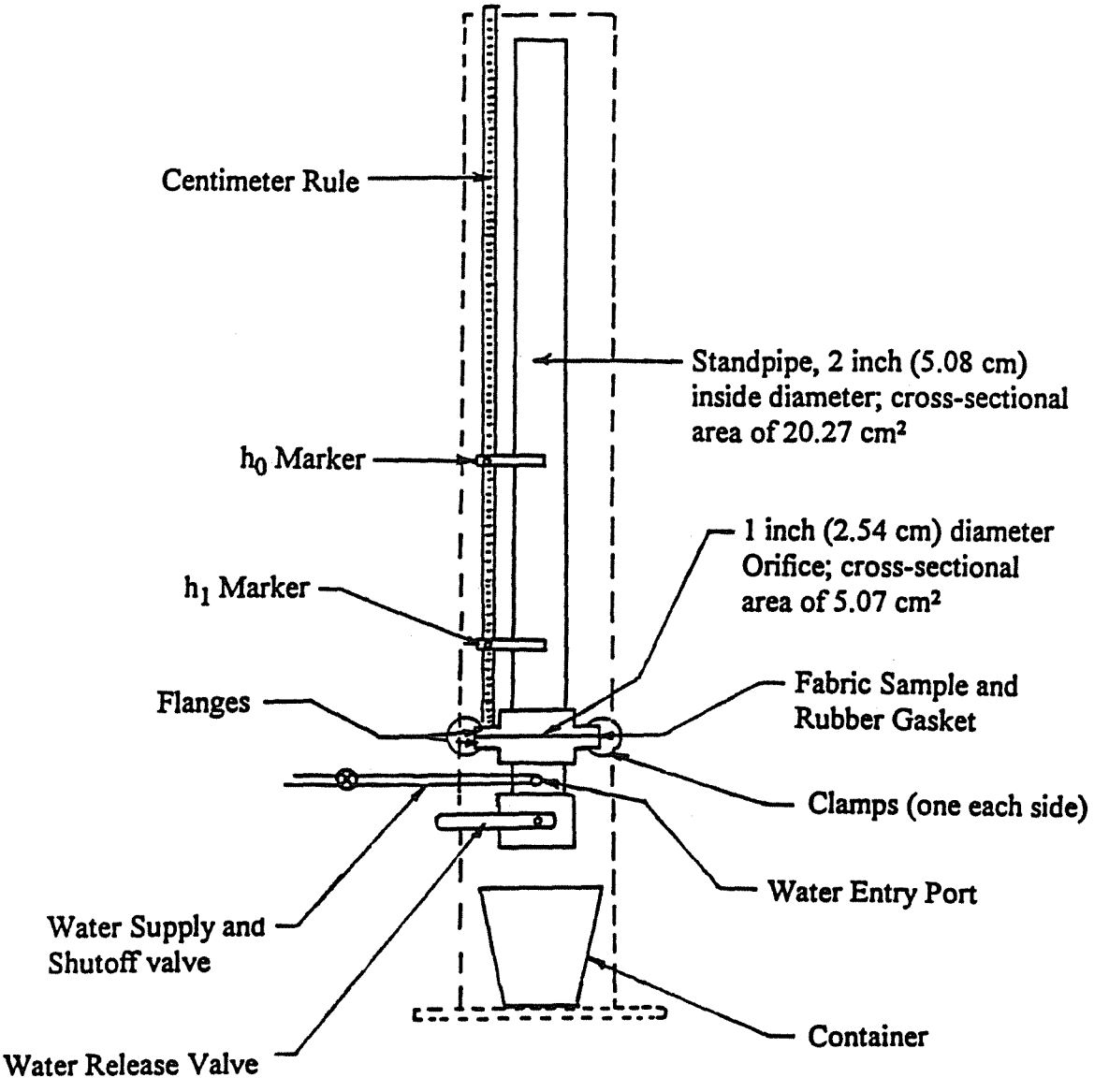

FIGURE 1

R_t VERSUS TEMPERATURE

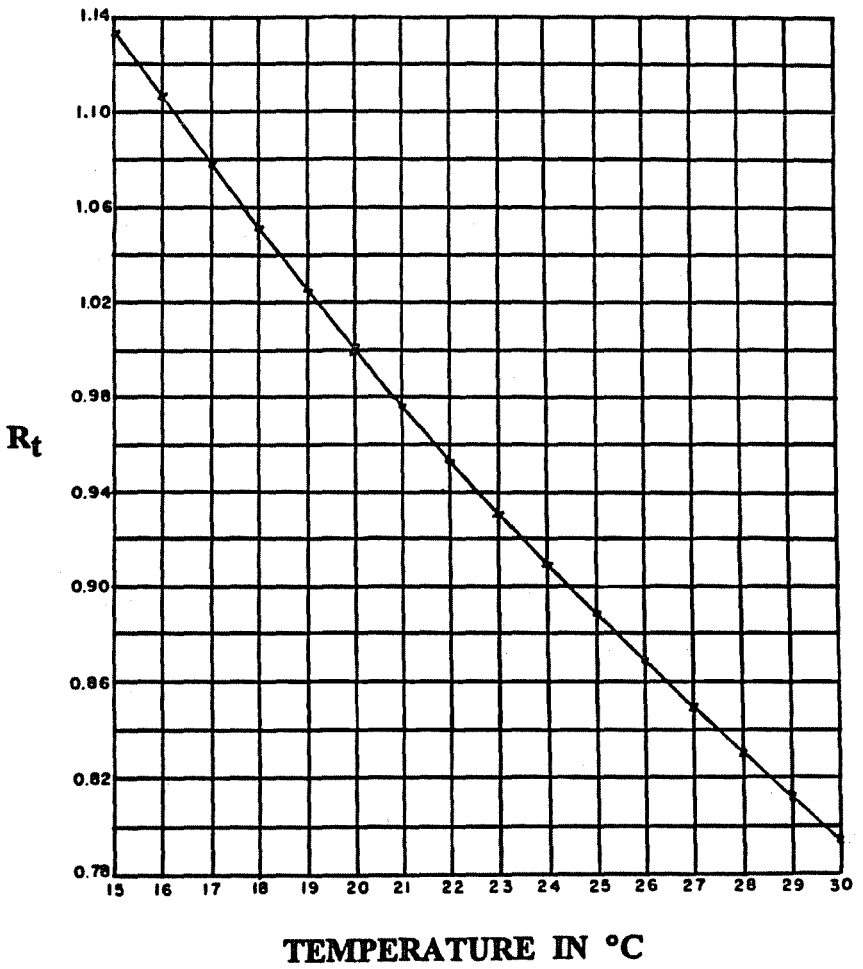

FIGURE 2

CALCIUM CARBONATE IN TOPSOIL (NEUTRALIZATION POTENTIAL OF TOPSOIL)

(An Arizona Method)

SCOPE

1. (a) This test method is used to determine the acid-consumption capacity or alkalinity of a topsoil as defined by the conditions of the test itself. The principal mineral components of the topsoil which give rise to this alkalinity are generally taken to be alkali and alkaline earth metal carbonates. They are represented by calcium carbonate, the most abundant member of the group.

(b) This test method may involve hazardous material, operations, or equipment. This test method does not purport to address all of the safety concerns associated with its use. It is the responsibility of the user to consult and establish appropriate safety and health practices and determine the applicability of any regulatory limitations prior to use.

(c) See Appendix A1 of the Materials Testing Manual for information regarding the procedure to be used for rounding numbers to the required degree of accuracy.

(d) Metric (SI) units and values are shown in this test method with English units and values following in parentheses. Values given for metric and English units may be numerically equivalent (soft converted) for the associated units, or they may be given as rounded or rationalized values (hard converted). Either the metric or English units along with their corresponding values shall be used in accordance with applicable specifications. See Appendix A2 of the Materials Testing Manual for additional information on the metric system.

APPARATUS

2. Requirements for the frequency of equipment calibration and verification are found in Appendix A3 of the Materials Testing Manual. Apparatus for this test procedure shall consist of the following:

(a) 150 mL beaker, tall form.

(b) 50 mL, volumetric pipette, accurate to ± 0.05 mL.

(c) A balance or scale capable of measuring the maximum weight to be determined and conforming to the requirements of AASHTO M 231, except the readability and sensitivity of any balance or scale utilized shall be at least 0.001 gram.

(d) Filter paper equivalent to Whatman No. 43.

(e) Filtration funnel, 7.5 cm, 60°, long stem.

(f) 300 mL beaker, tall form, graduated.

(g) 50 mL burette, accurate to ± 0.01 mL.

(h) Stirring rod.

REAGENTS

3. (a) 1.000 ± 0.005 Normal Hydrochloric Acid Standard Solution.

(b) 1.000 ± 0.005 Normal Sodium Hydroxide Standard Solution.

(c) Phenolphthalein Indicator (1% Phenolphthalein in 50% Isopropyl Alcohol).

PROCEDURE

4 (a) Weigh 2.000 ± 0.001 gram of soil passing a 1.70 mm (No. 12) sieve into a 150 mL beaker.

(b) Pipette 50.0 ± 0.05 mL Hydrochloric Acid into the 150 mL beaker.

(c) Stir thoroughly with a stirring rod.

(d) Let the mixture stand 15 minutes, or, if significant bubbling is observed, 30 minutes.

(e) Filter the entire contents of the 150 mL beaker into a 300 mL beaker and rinse three times, being careful to keep total volume at or under 100 mL.

(f) Dilute to 100 mL, if necessary, with demineralized water, and add one drop of Phenolphthalein Indicator.

(g) Titrate with Sodium Hydroxide to a Phenolphthalein endpoint.

(h) Record the volume of Sodium Hydroxide titrated, in mL, as "V".

CALCULATIONS AND REPORT

5. (a) Calculate Calcium Carbonate, in percent, using the following formula:

$$\text{Calcium Carbonate} = 2.5\,(50 - V)$$

(b) Report Calcium Carbonate to the nearest 0.1%.

SULFATE IN SOILS

(An Arizona Method)

SCOPE

1. (a) This test method describes a procedure for determining sulfate content in soil using a turbidimeter. The sulfate content determined is defined in terms of the method and is water leachable or "available" sulfate. Interferences are minimized by use of a reagent blank in the turbidimeter measurements.

(b) This test method involves hazardous material, operations, and equipment. This test method does not purport to address all of the safety concerns associated with its use. It is the responsibility of the user to consult and establish appropriate safety and health practices and determine the applicability of regulatory limitations prior to use.

(c) See Appendix A1 of the Materials Testing Manual for information regarding the procedure to be used for rounding numbers to the required degree of accuracy.

(d) The extraction procedure, paragraphs 4 (a) through (d), is the same as is used in Arizona Test Method 736, Chloride In Soils.

APPARATUS

2. Requirements for the frequency of equipment calibration and verification are found in Appendix A3 of the Materials Testing Manual. Apparatus for this test procedure shall consist of the following:

(a) Turbidimeter - with at least ± 2% accuracy to 1000 NTU and at least ± 5% accuracy to 4000 NTU, with sample cuvettes.

(b) Balances or scales:

1) One balance or scale capable of measuring the maximum weight to be determined and conforming to the requirements of AASHTO M 231, except the readability and sensitivity shall be at least 0.1 gram.

2) An analytical balance capable of measuring the maximum weight to be determined and conforming to the requirements of AASHTO M231, except the readability and sensitivity shall be at least 0.1 milligram.

(c) Graduated cylinder - 100 mL capacity.

(d) Beaker(s) - 300 mL capacity.

(e) Magnetic stirrer and stirring bar(s).

(f) Erlenmeyer flask(s) - 500 mL capacity with stoppers.

(g) Filtering funnel(s) with filter papers.

(h) Volumetric Flask - 1000 mL capacity, accurate to 0.3 mL.

(i) Reagent bottle - 500 mL capacity, with a dispenser capable of dispensing 5 mL of reagent.

(j) Weighing dish suitable for weighing and transferring less than 0.5 mL of crystalline material.

(k) Pipettes, Class A - 5 mL capacity, 10 mL capacity, and 25 mL capacity.

(l) Sample bottle - 200 mL capacity or larger, with cap.

(m) Dropping bottle.

(n) Centrifuge, with 50-mL tubes and closures.

REAGENTS

3. (a) Conditioning Reagent. Into a reagent bottle, add 300 mL demineralized water, 30 mL Reagent Grade Concentrated Hydrochloric Acid, 100 mL Reagent Grade Isopropyl Alcohol, 75 grams Reagent Grade Sodium Chloride, and 50 mL Reagent Grade Glycerol. Mix well.

(b) Sulfate Standard Solution, 0.100 mg/mL (100 ppm). Into a 1000 mL volumetric flask, add 147.9 mg Reagent Grade Anhydrous Sodium Sulfate. Fill the flask to the mark with demineralized water. Mix well.

(c) Barium Chloride Solution, 30%. Into a 1000 mL volumetric flask, add 300 grams of Reagent Grade Barium Chloride, Dihydrate, FW 244.28, Crystals, 20-30 mesh. Fill the flask to the mark with demineralized water. Mix well.

(d) Nitric Acid, 20%. Measure 10 mL concentrated nitric acid into a clean beaker containing approximately 40 mL demineralized water and mix well. Transfer to a dropping bottle. **Caution must be exercised in preparing and using this solution! It should be properly labelled and treated as a hazardous material.**

PROCEDURE

4. (a) Weigh 100.0 ± 0.1 grams of soil passing a No. 10 sieve into a 500 mL Erlenmeyer flask.

(b) Weigh 300.0 ± 0.1 grams demineralized water into the flask.

(c) Stopper the flask, shake vigorously, and let the mixture stand for one hour.

(d) Filter the extract into a sample bottle obtaining 125 to 150 mL of filtrate and put a cap on the bottle.

(e) The filtrate must be clear. If it is not clear, transfer a portion of the filtrate to a centrifuge tube(s), put a cap on the tube(s), and centrifuge to clarify the filtrate. If centrifugate is still not clear, add 2 drops of 20% nitric acid and repeat.

(f) Pipette a 25 mL aliquot of Sulfate Standard Solution into a 100 mL graduated cylinder. Record the size of the standard aliquot, in mL, as "ALSTD".

(g) Dispense 5 mL of Conditioning Reagent into the cylinder. Fill the cylinder to the 100 mL mark with demineralized water as accurately as possible.

(h) Mix and transfer the mixture to a beaker by pouring back and forth. Place a stirring bar into the beaker, place the beaker onto a stirrer, and stir until thoroughly mixed.

(i) Transfer some of the mixture to a cuvette filling the cuvette to the mark, insert the cuvette into the turbidimeter and adjust the turbidimeter to read 100.0% transmittance.

(j) Remove the cuvette and adjust the turbidimeter to read 0.0% transmittance.

(k) Repeat the turbidimeter adjustments in steps (i) and (j) until stable readings are obtained.

(l) Transfer the mixture in the cuvette back to the beaker, pipette 5 mL of Barium Chloride Solution into the beaker, place the beaker onto the stirrer, and stir the mixture for 5 to 7 minutes to allow for development of any precipitate.

(m) Mix and transfer some of the mixture containing the precipitate back into the same cuvette, by pouring back and forth, filling the cuvette to its mark. Insert the cuvette into the turbidimeter and read the absorbance.

(n) Record the absorbance value as "ABSTD" to the nearest 0.001 absorbance unit.

(o) Pipette a 25 mL aliquot of filtrate from the sample bottle (or centrifuge tube) into a 100 mL graduated cylinder. Record the size of the sample aliquot, in mL, as "ALSAM".

(p) Repeat steps (g) through (m). Record the absorbance value as "ABSAM" to the nearest 0.001 absorbance unit.

(q) Compare the values "ABSTD" and "ABSAM". If "ABSAM" is larger than "ABSTD", pipette a suitably smaller aliquot (for example, 10 mL) of filtrate from the sample bottle (or centrifuge tube) into a 100 mL graduated cylinder. Record the size of the reduced sample aliquot, in mL, as "ALSAM". Repeat steps (g) through (m). Record the absorbance value for the reduced sample aliquot as "ABSAM" to the nearest 0.001 absorbance unit. Compare the values "ABSTD" and "ABSAM" for the reduced sample aliquot. If the resultant "ABSAM" is still larger than "ABSTD", repeat using yet a smaller sample aliquot (for example, 5 mL) of filtrate.

CALCULATION AND REPORT

5. (a) Calculate sulfate content in the soil in parts per million, "S", and report to the nearest 10 ppm as follows:

$$S = 300 \times \left[\frac{ALSTD \times ABSAM}{ALSAM \times ABSTD} \right]$$

Where:
ALSTD = Size of the standard aliquot, 25 mL.
ABSTD = Absorbance corresponding to ALSTD.
ALSAM = Size of the sample aliquot, mL.
ABSAM = Absorbance corresponding to ALSAM.

DETERMINATION OF PORTLAND CEMENT CONTENT IN CEMENT TREATED BASE MATERIAL

(An Arizona Method)

SCOPE

1. (a) This test procedure covers a method for the determination of the percentage of portland cement in cement treated base material.

(b) This test method may involve hazardous material, operations, or equipment. This test method does not purport to address all of the safety concerns associated with its use. It is the responsibility of the user to consult and establish appropriate safety and health practices and determine the applicability of any regulatory limitations prior to use.

(c) See Appendix A1 of the Materials Testing Manual for information regarding the procedure to be used for rounding numbers to the required degree of accuracy.

(d) Metric (SI) units and values are shown in this test method with English units and values following in parentheses. Values given for metric and English units may be numerically equivalent (soft converted) for the associated units, or they may be given as rounded or rationalized values (hard converted). Either the metric or English units along with their corresponding values shall be used in accordance with applicable specifications. See Appendix A2 of the Materials Testing Manual for additional information on the metric system.

APPARATUS

2 Requirements for the frequency of equipment calibration and verification are found in Appendix A3 of the Materials Testing Manual. Apparatus for this test procedure shall consist of the following:

(a) Burette - 50 mL capacity with teflon stopcock and burette cover.

(b) Burette clamps.

(c) Ring stand.

(d) Pipette - 10 mL capacity, accurate to 0.05 mL.

(e) Plastic dropper dispenser - 100 mL.

(f) Plastic wash bottles - 100 mL capacity, 500 mL capacity, 1000 mL capacity.

(g) Graduated cylinders - (transparent plastic), 100 mL capacity, 500 mL capacity, 1000 mL capacity.

(h) A balance or scale capable of measuring the maximum weight to be determined and conforming to the requirements of AASHTO M 231, except the readability and sensitivity of any balance or scale utilized shall be at least 0.1 gram.

(i) An analytical balance capable of measuring the maximum weight to be determined and conforming to the requirements of AASHTO M 231, except the readability and sensitivity of any balance utilized shall be at least 0.0001 gram.

(j) Beakers - (plastic), 300 mL capacity, 2000 mL capacity, 4000 mL capacity.

(k) Stirring rods - stainless steel, 305 mm (12") long; glass, not over 150 mm (6 inches) long.

(l) Erlenmeyer flasks - (plastic), 500 mL capacity with stoppers.

(m) Variable control hot plate.

(n) Spatulas, cleaning brushes, watch glasses.

(o) Stop watch or equally efficient timing device.

(p) Plastic bottles - 3.8 liter (1 gal.), 1 liter (1 qt.).

(q) 19.0 liter (5 gallon) polyethylene jug.

REAGENTS

3. Reagents shall be prepared as described below. Distilled or de-ionized water shall be used in their preparation.

(a) 2-Propanol (Analyzed Reagent)

(b) Tartaric Acid 72% Solution (TAS).

1) For a 19.0-liter (5 gallon) batch, weigh 13680 grams of reagent grade D-Tartaric Acid into a 19.0 liter (5 gallon) polyethylene jug, or other suitable non-reactive container, precalibrated to indicate a 19.0 liter (5 gallon) volume.

2) Add boiling water to fill the jug to the 19.0 liter (5 gallon) mark. Mix thoroughly and let set overnight.

3) Filter into another 19.0 liter (5 gallon) jug and dilute to the 19.0 liter (5 gallon) mark.

(c) Potassium Hydroxide 1-Normal Titrating Solution (TS).

1) Weigh 56.1 grams reagent grade Potassium Hydroxide into a one liter polyethylene jug, or other suitable non-reactive container, precalibrated to indicate a one liter volume. The Potassium Hydroxide shall not be placed in a glass container.

2) Add sufficient water to dissolve the Potassium Hydroxide. Mix thoroughly and allow to come to room temperature. Dilute to the one liter mark. This solution shall not be stored in a glass container.

(e) 1% Methyl Red Indicator.

1) For a 50 mL batch, weigh 0.5 gram methyl red dye into a 100 mL beaker.

2) Add 25 mL 2-propanol and dissolve.

3) Fill to 50 mL mark with distilled water.

4) Transfer to the dropper dispenser.

PREPARATION OF STANDARD SAMPLES

4. (a) Standard samples shall be prepared using the same materials and mix design formula as the job from which field samples will be taken. A representative minimum 3000 grams of soil/aggregate material with no added cement shall be used to prepare the standard samples. From this, three representative portions to be used for preparing standard samples shall be obtained using a standard reduction method such as given in AASHTO T 248. The standard samples shall be prepared with differing cement contents bracketing the mix design cement content as follows:

(1) 0.0% cement content.

(2) The mix design cement content, expressed to the nearest 0.1%.

(3) 5.0% more cement than the design content.

(b) The three components of the standard samples are cement, soil/aggregate material, and water. The total sample weight shall be 300 grams. The weight of water from the job is 30 grams. The dry components of the standard sample are cement and soil/aggregate material with a combined weight of 270 grams. The state of dryness of the soil/aggregate material used in preparing standard samples may be either saturated-surface-dry, air-dry, or oven-dry. It is important that the same state of dryness be obtained for all standard samples and for field test samples, [See paragraph 8(a)]. Use the following formulas to determine the dry components of each standard sample:

$$W_C = 300 \times \frac{C}{100}$$

$$W_{S/A} = 270 - W_C$$

Where: W_C = Weight of cement, grams
$W_{S/A}$ = Weight of soil/aggregate, grams
C = Cement content, % of total sample

NOTE: In case a large quantity of large aggregate is present in a cement treated base job, a minimum of 15,000 grams of soil/aggregate material should be obtained for preparation of standard samples, and the following procedure followed:

(1) For each standard sample, 5000 grams of soil/aggregate material is obtained using the standard reduction method and separated into coarse and fine fractions.

(2) The coarse fraction is washed with distilled water and its adhering fines are added to the fine fraction.

(3) From the resulting combined fine fraction, a representative portion is obtained using the standard reduction method.

TEST PROCEDURE FOR STANDARD SAMPLES

5. (a) Transfer the dry components to the 2000 mL plastic beaker.

NOTE: It is preferable to weigh the cement as accurately as possible. Use an analytical balance to weigh the desired amount of cement. Then transfer the cement to the aggregate already in the plastic beaker.

(b) Mix thoroughly. AVOID PRODUCING DUST.

(c) Add 30 grams of water that is used on the job for mixing the batch.

NOTE: At this point it may be desirable to thoroughly mix the standard sample and transfer it to a suitable container and allow it to cure for a sufficient time to approximate the expected condition of the field sample at the time it is tested, after which the standard sample must be broken down as necessary to facilitate mixing and intimate contact with the reagent (TAS). An apparatus such as the one described in AASHTO T 87 may be utilized for this purpose. Care should be taken to avoid reducing the size of individual natural particles. Quantitatively transfer the standard sample to the 2000 mL beaker.

(d) Add 400 ± 0.1 mL of distilled water to the beaker.

(e) Stir thoroughly and vigorously for 3 ± 1 minutes.

(f) Cover the 2000 mL beaker with a watch glass. Keep the beaker covered with a watch glass at all times, except when actually in use.

(g) Let stand undisturbed for 40 ± 5 minutes.

(h) Stir thoroughly and vigorously for 2 minutes. Let stand undisturbed for 1 to 2 minutes.

(i) Accurately measure 300 mL Tartaric Acid 72% Solution (TAS) into a 500 mL graduated cylinder.

NOTE: Keep all containers of all reagents covered when not in use. Keep all stock containers sealed.

(j) Add TAS slowly and with continued stirring to the beaker.

NOTE: If effervescence occurs, stop addition of TAS and stir vigorously until bubbling ceases, complete the addition of TAS, then stir at least 2 minutes continuously.

(k) Let the sample stand undisturbed for 10 minutes.

(l) Accurately measure 710 mL of 2-propanol into a 1000 mL graduated cylinder.

(m) Add the 2-propanol, all at once, to the beaker, completely draining the cylinder. Immediately stir, rapidly and thoroughly, for exactly 2 minutes, so that all the contents of the beaker are washed with 2-propanol. Cover with a watch glass, and let the beaker stand undisturbed until a clear liquid layer forms.

(n) Carefully pour only the clear liquid into a 500 mL plastic Erlenmeyer flask. Tightly stopper and seal the flask.

TITRATION PROCEDURE

6. (a) Fill the 50 mL burette completely with Potassium Hydroxide 1-Normal Titrating Solution (TS). Open the stopcock and let the burette drain completely.

(b) Refill the burette with TS, and adjust the bottom of the meniscus to read 0.0 mL.

NOTE: Make sure that there are no air bubbles anywhere in the system. Always check just below the stopcock for air bubbles when the burette is draining. Keep the top of the burette covered.

(c) Transfer an aliquot of 10.00 ± 0.05 mL of the clear liquid from the flask to a 300 mL plastic beaker using a 10 mL pipette.

(d) Add 100 mL distilled water to the beaker, using a 100 mL graduated cylinder.

(e) Stir the contents of the beaker with a glass stirring rod. Do not remove the stirring rod until the titration is completed.

(f) Add 2 drops of 1% Methyl Red Indicator and stir the solution. The test solution should now be a clear, dark-red color. The color change is as follows:

Start: Clear, dark-red solution.
To: Clear, pure orange solution.
End: Clear, pure lemon-yellow solution.

(g) Rapidly, with stirring, add TS until the solution turns to an orange color.

(h) Stir the solution.

(i) Set the burette stopcock to deliver the TS one drop at a time, with stirring between each addition. As the end point is approached, the solution should turn to a clear red-orange or clear yellow-orange color.

(j) Decrease the rate of addition of TS, and stop addition when one drop produces a pure lemon-yellow clear solution. Allow the solution to stand undisturbed for one minute to check for color fading.

(k) If the color fades, add one more drop and again allow to stand undisturbed for one minute. Repeat until the color does not fade.

(l) Read the volume of TS used to the nearest 0.1 mL at the bottom of the meniscus.

(m) If time is available, run at least two titrations for each sample and obtain the average volume of TS used.

PREPARATION OF THE STANDARD CURVE

7. (a) The standard curve is prepared using linear graph paper.

(b) Plot the number of mL of TS, along the X-axis.

(c) Plot the percentages of portland cement, along the Y-axis.

(d) Draw the straight line of best fit for the three points.

TEST PROCEDURE FOR FIELD SAMPLE

8. (a) From a representive minimum 1000 gram field sample of the cement treated base material to be tested, at the same state of dryness as the standard samples, obtain a 270 ± 0.1 gram test sample using the standard reduction method used with the standard samples and transfer it to a 2000 mL plastic beaker.

NOTE: As necessary, the field sample must be broken down to facilitate weighing, mixing, and intimate contact with the reagent (TAS). An apparatus such as the one described in AASHTO T 87 may be utilized for this purpose. Care should be taken to avoid reducing the size of individual natural particles.

NOTE: If much large aggregate is present, a representative minimum of 5000 gram field sample should be used. It should be separated into coarse and fine fractions and the coarse fraction washed with distilled water to obtain a combined fine fraction from which the test sample is prepared as above. [See note following paragraph 4(b).]

(b) Add 400 ± 0.1 mL of distilled water to the beaker.

(c) Stir thoroughly and vigorously for 3 ± 1 minutes.

(d) Cover the beaker with a watch glass. Keep the beaker covered with a watch glass at all times, except when actually in use.

(e) Let the beaker stand undisturbed for 40 ± 5 minutes.

(f) Follow the procedure as described in paragraphs 5(h) through 5(n).

TITRATION PROCEDURE

9. Titrate in accordance with Section 6.

REPORT

10. Read results directly from the Standard Curve as percent portland cement in the field sample. Report the result to the nearest 0.1%.

TESTING OF THERMOPLASTIC PAVEMENT MARKING MATERIAL

(An Arizona Method)

SCOPE

1. (a) Thermoplastics to be tested according to the procedures given herein are mixtures of resins, mineral fillers, pigments, organic additives, and reflective glass spheres.

(b) All testing is done on hot melt test specimens made from the commercial products. These include field test specimens obtained from highway striping operations and specimens produced according to Part I of this method.

(c) This method is divided into two parts: Part I gives a procedure for producing hot melt test specimens. Part I also gives an alternate procedure for producing hot melt test specimens in accordance with AASHTO T 250. Part II gives the procedures for testing specimens.

(d) This test method involves hazardous material, operations, and equipment. This test method does not purport to address all of the safety concerns associated with its use. It is the responsibility of the user to consult and establish appropriate safety and health practices and determine the applicability of regulatory limitations prior to use.

(e) See Appendix A1 of the Materials Testing Manual for information regarding the procedure to be used for rounding numbers to the required degree of accuracy.

(f) Requirements for the frequency of equipment calibration and verification are found in Appendix A3 of the Materials Testing Manual.

PART I - PROCEDURE FOR PRODUCING HOT MELTS

APPARATUS

2. (a) Heating mantle - Glas-Col Model 620 or equivalent, capable of accepting a 4000 mL beaker.

(b) Stainless steel beaker - 4000 mL, Vollrath No. 84000 or equivalent, for use with heating mantle.

(c) Mixer - Variable-speed, air-driven, Cole-Parmer No. E-04685-00 or equivalent.

(d) Mixer stand - Cole-Parmer No. E-04546-00 or equivalent with 60 cm height and capability of holding mixer.

(e) Adjustable chuck - Cole-Parmer No. E-04423-00 or equivalent, capable of coupling mixer shaft to impeller assembly shaft.

(f) Impeller assembly - Any assembly with a 35-40 cm shaft of 0.5 cm minimum diameter, dual impellers of 8-10 cm diameter spaced 4-6 cm apart with one at the end of the shaft, capable of efficient mixing of 3000-3500 mL of fluid at 700-800 rpm. Alternatively, a heavy-duty "Jiffy" type impeller for one gallon paint containers is suitable.

(g) Temperature controller with thermocouple probe - Glas-Col Digitroll II, No. 104A PL612, with 6 in. type "J" iron-constantan thermocouple or equivalent, capable of controlling mixture temperature in conjunction with heating mantle at 218 °C.

(h) Ladles - Stainless steel, 30 mL and 60 mL capacity with long handles for sampling hot melts.

(i) Aluminum or stainless steel lid to cover beaker, with holes for impeller shaft and thermocouple, and turned-down edges for holding in place over beaker.

PROCEDURE

3. (a) Mount the mixer, with impeller assembly and lid, onto the mixer stand and note position of mixer which locates bottom of impeller assembly about 2-3 cm from bottom of beaker. Secure the mantle to the mixer stand in such a position as to permit the impeller assembly to be placed over the center of the beaker and to prevent relative movement between the impeller assembly and the beaker. Plug the mantle cord into the controller. Plug the controller into a wall outlet.

(b) Remove the mixer with impeller assembly and lid. Split out a 6000 gram sample of thermoplastic material and add enough to the beaker to come to within 5-6 cm of the top. Replace the mixer, impeller, and lid. (It may be necessary to first work the impeller assembly into the thermoplastic, and then replace the lid and mixer). Place the thermocouple in position through its hole in the lid, making sure it penetrates

into the thermoplastic. Set the controller parameters for automatic control of temperature at 218 °C, and start the heating cycle.

(c) When the thermoplastic has melted sufficiently, start the mixer at a low speed. As the temperature continues to rise, increase the mixer speed until it is evident that the entire mass of thermoplastic in the beaker is being turned over continuously. (Note this mixer speed for future use). Continue heating and mixing while periodically checking the level of thermoplastic in the beaker. If the level drops below 5-6 cm from the top of the beaker, add more thermoplastic as necessary. Continue this process for four hours after the material has reached the final temperature of 218 °C.

(d) At the end of the four hour period, turn the mixer off and remove it with the lid and impeller assembly. Immediately use the ladles to transfer enough of the melt to fill a set of suitable can lids, usually a one-gallon can lid and two one-quart can lids. Set the lids with the test specimens aside for cooling. These will be used for all of the tests of the thermoplastic material.

(e) Use heat resistant gloves to remove the beaker from the mantle and discard the remainder of the thermoplastic. Allow the beaker to drain completely while the material is hot.

Note: Alternatively, the procedure for producing hot melt test specimens for Reflectance, Color, and Yellowness Index as given in AASHTO T 250 may be used, if desired. If AASHTO T 250 is used, the amount of material specified may be increased to approximately 500 grams.

PART II - TESTS

REFLECTANCE AND YELLOWNESS INDEX

4. The apparatus and procedure for determining reflectance and yellowness is given in Sections 5 through 8.

APPARATUS

5. Reflectance and gloss meter - Photovolt 577 or equivalent, with "T" search head.

CALIBRATION OF METER

6. After an initial warmup time of a minimum of 30 minutes, calibrate the meter for use on the applicable filter channels (green "G", amber "A", and/or blue "B") as follows:

(a) Load the green filter in the filter rack of the "T" search unit and rotate the rack until the filter is in front of the lens.

(b) Select the green memory location by depressing the "G" button on the front face of the meter.

(c) Place the black cavity standard on the head of the search unit.

(d) Set the dark current (zero offset) by depressing first the "CHANGE" button and then the "ZERO" button on the face of the meter.

(e) Place the Photovolt ceramic reflectance standard plaque on the head of the search unit.

(f) Enter the standard reflectance value for the green filter on the meter display, by depressing first the "CHANGE" button, then the "STD" button, and finally, the "A", "B", and "G" buttons as necessary to increment the tens, units, and tenths digits respectively until the value is displayed. Then depress the "STD" button again. The standard reflectance value for the green filter is now stored in the memory, and the meter is now calibrated on the green filter channel.

(g) If reflectance data is to be obtained for a white test specimen, repeat steps 6(a) through 6(f) for the amber filter channel and again for the blue filter channel.

(h) For each channel used, immediately prior to obtaining reflectance data the calibration should be checked and, if necessary, corrected. First replace the black cavity standard on the head of the search unit and if drift has occurred, depress the "CHANGE" button and then the "ZERO" button. Next replace the standard plaque on the head of the search unit and if drift has occurred, depress the "CHANGE" button, and then depress the "STD" button twice.

MEASURING AND RECORDING REFLECTANCE DATA

7. (a) Obtain reflectance data for a white test specimen as follows:

(1) After calibration of the meter on the green filter channel, measure the reflectance of the specimen. Record the result as “Green.”

(2) Repeat step 7(a)(1) for the amber channel. Record the result as "Amber."

(3) Repeat step 7(a)(1) for the blue channel. Record the result as "Blue."

(b) Obtain reflectance data for a yellow test specimen as in step 7(a)(1) for the green channel only.

CALCULATING AND REPORTING REFLECTANCE PROPERTIES

8. (a) Report "Reflectance" of a white or yellow test specimen as the reflectance value "Green" obtained as in 7(a)(1) or 7(b) above, respectively.

(b) Calculate and report "Yellowness Index" of a white test specimen according to the following formula:

$$\text{Yellowness Index} = \frac{\text{Amber - Blue}}{\text{Green}} \times 100$$

BINDER AND GLASS BEAD CONTENT

9. The apparatus, reagents, and procedure for determining binder content and glass bead content is given in Sections 10 through 13.

APPARATUS

10. (a) A balance or scale capable of measuring the maximum weight to be determined and conforming to the requirements of AASHTO M 231, except the readability and sensitivity of any balance or scale utilized shall be at least 0.01 gram.

(b) Porcelain crucibles, 30 mL capacity.

(c) Muffle furnace, capable of holding a constant temperature of 538 °C and having a sufficiently large chamber for several crucibles.

(d) Drying oven, capable of holding a constant temperature of 100 °C.

(e) Mortar, 75-100 mL capacity, with pestle.

(f) Dessicator.

(g) Beakers, 400 mL capacity.

(h) Aluminum dishes, 57 mm diameter.

(i) Small spatula.

(j) Balance brush.

(k) Hot plate.

REAGENT

11. Hydrochloric acid solution, 50%, prepared by adding (cautiously) 500 mL concentrated hydrochloric acid to 500 mL demineralized water.

PROCEDURE

12. (a) Break up a test specimen into pieces sufficiently small to permit weighing of material into a crucible.

(b) Weigh a crucible to the nearest 0.01 gram. Record the weight as "C".

(c) Zero the balance and weigh 10.00 ± 0.10 gram of test specimen into the crucible. Record the weight as "S".

(d) Preheat the furnace to 538 °C.

(e) Place the crucible **(cautiously)** into the furnace.

(f) After one hour, remove the crucible from the furnace and place it into the dessicator for cooling.

(g) After cooling, remove the crucible and weigh it, with its contents, to the nearest 0.01 gram. Record the weight as "R".

(h) Use the spatula to scrape the inside of the crucible and quantitatively transfer all of the residue into the mortar.

(i) Using the pestle, gently grind the residue to a fine powder, taking care not to crush the glass beads.

(j) Using the brush, quantitatively transfer all of the powdered residue to a beaker.

(k) Slowly add 150 mL of acid solution to the beaker, taking care to minimize possible splattering due to generation of carbon dioxide.

(l) Stir the mixture by swirling, place the beaker on the hot plate, and heat to boiling with frequently stirring.

(m) Remove the beaker from the hot plate and add 150 mL of demineralized water.

(n) Let stand until the beads settle and decant the suspension, being careful not to lose any beads.

(o) Add about 100 ml of water and repeat step 12(n) until the decanted water is clear.

(p) Place the beaker into the drying oven.

(q) When completely dried, remove the beaker, with beads, from the oven.

(r) Allow the beaker and beads to cool. Weigh to the nearest 0.01 gram and record the weight as "B_1".

(s) Using the brush, quantitatively transfer the beads to a suitable receptacle for microscopic examination, if desired, or to a waste container.

(t) Reweigh the empty beaker to the nearest 0.01 gram. Record the weight as "B_2".

CALCULATIONS AND REPORT

13. (a) Calculate and report the binder content, to the nearest 0.1%, using the following formula:

$$\text{Binder Content, \%} = \frac{C + S - R}{S} \times 100$$

(b) Calculate and report the bead content, to the nearest 0.1%, using the following formula:

$$\text{Bead Content, \%} = \frac{B_1 - B_2}{S} \times 100$$

CHLORIDE IN SOILS

(An Arizona Method)

SCOPE

1. (a) This test method describes a procedure for determining chloride content in soil by a standard addition technique using a chloride electrode. The chloride content is defined in terms of the method and may be called water leachable or "available" chloride.

(b) This test method involves hazardous material, operations, and equipment. This test method does not purport to address all of the safety concerns associated with its use. It is the responsibility of the user to consult and establish appropriate safety and health practices and determine the applicability of regulatory limitations prior to use.

(c) See Appendix A1 of the Materials Testing Manual for information regarding the procedure to be used for rounding numbers to the required degree of accuracy.

(d) The extraction procedure, paragraphs 4 (a) through (d), is the same as is used in Arizona Test Method 733, Sulfate In Soils.

APPARATUS

2. Requirements for the frequency of equipment calibration and verification are found in Appendix A3 of the Materials Testing Manual. Apparatus shall consist of the following:

(a) 300 mL tall-form beaker (Pyrex #1060 or equivalent), calibrated to indicate 100 mL volume.

(b) An analytical balance capable of measuring the maximum weight to be determined and conforming to the requirements of AASHTO M231, except the readability and sensitivity of any balance utilized shall be at least 0.001 gram.

(c) Whatman #43 filter paper, or equivalent.

(d) Filtering funnel, 8 cm diameter.

(e) Magnetic stirrer and stirring bar.

(f) Erlenmeyer flask(s) - 500 mL capacity with stoppers.

(g) Chloride electrode system (Orion Ionplus #9617 combination chloride electrode or equivalent) suitable for use in the 300 mL beaker.

(h) Specific ion meter (Orion EA 940 or equivalent) suitable for use with the chloride electrode system.

(i) Thermometer, accurate to at least 0.5 °C.

(j) Pipettes of 1 mL, 5 mL, and 10 mL capacity, accurate to 1%.

(k) Sample bottle, 200 mL capacity or larger, with cap.

(l) Dropping bottle.

REAGENTS

3. (a) Chloride Standard Solution, 1.000 mg/mL (1000 ppm). (Fisher Scientific #LC13000-1, or equivalent, or made by transferring 1.648 gram dried primary standard sodium chloride into a 1 liter volumetric flask and diluting to 1000 mL with demineralized water).

(b) Nitric Acid, 20%. Measure 10 mL concentrated nitric acid into a clean beaker containing approximately 40 mL demineralized water and mix well. Transfer to a dropping bottle. **Caution must be exercised in preparing and using this solution! It should be properly labelled and treated as a hazardous material.**

PROCEDURE

4. (a) Weigh 100.0 ± 0.1 grams of soil passing a No. 10 sieve into a 500 mL Erlenmeyer flask.

(b) Weigh 300.0 ± 0.1 grams demineralized water into the flask.

(c) Stopper the flask, shake vigorously, and let the mixture stand one hour.

(d) Filter the extract into a sample bottle obtaining 125 to 150 mL of filtrate and put a cap on the bottle.

(e) Pipette a 10 mL aliquot of the filtrate into a 300 mL beaker. Record this volume as "A". Dilute to the 100 mL mark with demineralized water and add three drops of Nitric Acid, 20%. This is the "sample reading solution." Adjust the solution temperature to 25 ± 0.5 °C and maintain at that temperature throughout remainder of the test.

(f) Place a stirring bar into the beaker, place the beaker onto the magnetic stirrer, insert the electrodes, and initiate stirring. Stirring shall be at a constant moderate rate, such that the vortex created by stirring does not expose the tips of the immersed electrodes. The rate of stirring and the temperature (25 ± 0.5 °C) shall be constant throughout the procedure.

(g) After the reading has stabilized, record the initial reading, to the nearest millivolt, as "E_1".

(h) Add 1.00 mL Chloride Standard Solution.

(i) After the reading has stabilized, record the final reading, to the nearest millivolt, as "E_2".

(j) Calculate $\Delta E = E_1 - E_2$.

(k) If ΔE is less than 18, repeat paragraphs (e) through (j) with a smaller size aliquot.

(l) Prepare a reagent blank solution by placing 100 mL of demineralized water into a 300 mL beaker and adding 3 drops of Nitric Acid 20%. Repeat steps (f) through (j).

CALCULATIONS AND REPORT

5. (a) Calculate chloride concentration, "C_o" in the sample reading solution and "C_b" in the reagent blank reading solution, and record each to the nearest 0.010 mg/mL, as follows:

$$C_o \text{ or } C_b = \frac{1}{(101)\,10^{(\Delta E/S)} - 100}$$

Where: S = Electrode slope at 25 ± 1.0 °C as determined in accordance with manufacturer's recommendations. (The slope should equal approximately 59 millivolts for a properly functioning electrode.)

(b) Calculate chloride concentration in the soil in parts per million, "C", and report to the nearest 10 ppm as follows:

$$C = \frac{3 \times 10^5 (C_o - C_b)}{A}$$

CHLORIDE IN CONCRETE ADMIXTURES

(An Arizona Method)

SCOPE

1. (a) This test method describes a procedure for determining the chloride content of products used as admixtures in Portland cement concrete. The method employs a standard addition technique using a chloride electrode.

(b) This test method involves hazardous material, operations, and equipment. This test method does not purport to address all of the safety concerns associated with its use. It is the responsibility of the user to consult and establish appropriate safety and health practices and determine the applicability of regulatory limitations prior to use.

(c) See Appendix A1 of the Materials Testing Manual for information regarding the procedure to be used for rounding numbers to the required degree of accuracy.

APPARATUS

2. Requirements for the frequency of equipment calibration and verification are found in Appendix A3 of the Materials Testing Manual. Apparatus shall consist of the following:

(a) 300 mL tall-form beaker (Pyrex #1060 or equivalent), calibrated to indicate 100 mL volume.

(b) An analytical balance capable of measuring the maximum weight to be determined and conforming to the requirements of AASHTO M231, except the readability and sensitivity of any balance utilized shall be at least 0.001 gram.

(c) Suitable magnetic stirrer and stirring bar.

(d) Chloride electrode system (Orion Ionplus #9617 combination chloride electrode or equivalent) suitable for use in the 300 mL beaker.

(e) Specific ion meter (Orion EA 940 or equivalent) suitable for use with the chloride electrode system.

(f) 3 mL disposable syringe with cap (Beckton Dickinson # 301112 or equivalent).

(g) 1.000 mL pipette or pipetter accurate to ± 0.001 mL.

REAGENTS

3. (a) Chloride standard solution, 1.000 mg/mL (1000 PPM), (Fisher Scientific #LC13000-1, or equivalent, or made by transferring 1.648 gram dried primary standard sodium chloride into a 1 liter volumetric flask and diluting to 1000 mL with demineralized water).

(b) Nitric acid, 8% (made by transferring 80 mL of concentrated nitric acid into a 1 liter volumetric flask containing approximately 500 mL demineralized water and diluting to 1000 mL with demineralized water. **Caution must be exercised in preparing and using this solution! It should be properly labelled and treated as a hazardous material.**

PROCEDURE

4. (a) Weigh 1.000 ± 0.010 gram sample of admixture into a beaker. (If liquid, weigh by difference using a syringe). Record the sample weight to the nearest 0.001 gram as "A."

(b) Transfer 25 mL nitric acid, 8% into the beaker and swirl to mix with the sample.

(c) Dilute to 100 mL with demineralized water.

(d) Place a stirring bar into the beaker, place the beaker onto the magnetic stirrer, insert the electrode(s) into the solution, and initiate stirring. Stir at a constant moderate rate such that the vortex created by stirring does not expose the tip(s) of the electrode(s) to the air. The rate of stirring and the temperature (25.0 ± 1.0 °C) shall be held constant throughout the procedure.

(e) After the reading has stabilized, record it to the nearest millivolt, as "E_1."

(f) Pipette 1.000 ± 0.001 mL chloride standard solution into the beaker.

(g) After the reading has stabilized, record it to the nearest millivolt, as "E_2."

(h) Calculate $\Delta E = E_1 - E_2$.

(i) If ΔE is less than 18 mV, repeat steps (a) through (h) with a smaller size sample.

(j) Prepare a reagent blank solution by transferring 25 mL of Nitric Acid, 8% into a 300 mL beaker and diluting to 100 mL with demineralized water. Repeat steps (d) through (h).

CALCULATIONS AND REPORT

5. (a) Calculate chloride concentration, "C_o" in the sample reading solution and "C_b" in the reagent blank reading solution, and record each to the nearest 0.010 mg/mL, as follows:

$$C_o \text{ or } C_b = \frac{1}{(101)\,10^{(\Delta E/S)} - 100}$$

Where: S = Electrode slope at 25 ± 1.0 °C as determined in accordance with manufacturer's recommendations. (The slope should equal approximately 59 millivolts for a properly functioning electrode.)

(b) Calculate chloride concentration in the admixture in parts per million, "C", and report to the nearest 10 PPM as follows:

$$C = \frac{10^5 (C_o - C_b)}{A}$$

November 14, 2008
(1 Page)

SERIES 800

DESIGN

The following methods shall be performed in accordance with the respective designation:

ARIZONA TEST METHODS:

TITLE	DESIGNATION
Evaluation of Profiles…….……	ARIZ 801a
Effect of Water on Strength of Compacted Bituminous Mixtures (Immersion Compression Test)…….	ARIZ 802g
Centrifuge Kerosene Equivalent of Aggregate, Including K-Factor…….	ARIZ 805b
Maximum Theoretical Specific Gravity of Laboratory Prepared Bituminous Mixtures (Rice Test)……..……	ARIZ 806e
Design of Slurry Seal…….……	ARIZ 807
Design of Asphaltic Concrete Friction Course…….	ARIZ 814a
Marshall Mix Design Method for Asphaltic Concrete…….	ARIZ 815c
Design of Exposed Aggregate Seal Coats……..	ARIZ 819a
Determination of Additive or Asphalt Blend Required for Modification of Asphalt Viscosity…….	ARIZ 822
Method of Test for Determining the Quantity of Asphalt Rejuvenating Agent Required for an Asphaltic Pavement……..	ARIZ 825a
Evaluation of Pavement Smoothness……..……..	ARIZ 829a
Marshall Mix Design Method For Asphaltic Concrete (Asphalt-Rubber) [AR-AC]……..	ARIZ 832

NOTE: It shall be assured that the appropriate methods as given in the project requirements are being adhered to.

EVALUATION OF PROFILES

(A Modification of California Test 526)

SCOPE

1. This method describes the procedure for determining the Profile Index from profilograms of pavements made with a California type profilograph. Also described is the procedure used to locate individual high areas when their reduction is required by the contract documents. The same requirements apply to both the mechanical and the electronic profilograph, except that the electronic type will compute the profile index and high points directly, in lieu of manual reduction, and will print a summary of data for the test section.

SUMMARY OF METHOD

2. The profilogram is recorded on a scale of one inch equal to 25 feet longitudinally and one inch equal to one inch, or full scale, vertically. The determination of the Profile Index involves measuring "scallops" that appear outside a "blanking band". The determination of individual high areas involves the use of a special template.

PART I
DETERMINATION OF PROFILE INDEX

APPARATUS

3. The only special equipment needed to determine the Profile Index is a plastic scale 1.70 inches wide and 21.12 inches long representing a pavement length of 528 feet, or one tenth of a mile, at a scale of 1 inch = 25 feet. Near the center of the scale is an opaque band 0.2 inch wide extending the entire length of 21.12 inches. On either side of this band are scribed lines 0.1 inch apart parallel to the opaque band. These lines serve as a convenient scale to measure deviations or excursions of the graph above or below the blanking band. These are called "scallops".

METHOD OF COUNTING

4. The methodology described below pertains to the use a mechanical profilograph. If an electronic profilograph is used, this counting is performed automatically (see Part III).

(a) Place the plastic scale over the profile in such a way as to "blank out" as much of the profile as possible. When this is done, scallops above and below the blanking band usually will be approximately balanced. (See Figure 1)

(b) The profile trace will move from a generally horizontal position when going around superelevated curves, making it impossible to blank out the central portion of the trace without shifting the scale. The profile under such conditions should be broken in short sections and the blanking band repositioned on each section while counting. (See Figure 2A)

(c) Starting at the right end of the scale, measure and total the height of all the scallops appearing both above and below the blanking band, measuring each scallop to the nearest 0.05 inch. Write this total on the profile sheet near the left end of the scale together with a small mark to align the scale when moving to the next section. Short portions of the profile line may be visible outside the blanking band, but unless they project 0.03 inch or more, and extend longitudinally for two feet (0.08 inch on the profilogram) or more, they are not included in the count. (See Figure 1 for illustration of these special conditions.)

(d) When scallops occurring in the first 0.1 mile are totaled, slide the scale to the left, aligning the right end of the scale with the small mark previously made, and proceed with the counting in the same manner. The last section counted may or may not be an even 0.1 mile. If not, its length should be scaled to determine its length in miles.

CALCULATIONS

5. The Profile Index, "PrI", is determined as "inches per mile in excess of the 0.2 inch blanking band", but is simply called the Profile Index.

(a) The procedure for converting counts to Profile Index is given below. If an electronic profilograph is used, this calculation is performed automatically (see Part III).

$$\text{PrI} = \frac{1}{\text{Length of profile (miles)}} \times \frac{\text{Total count (Tenths of an Inch)}}{10}$$

(b) Profile Indexes may be averaged for two or more profiles of the same section of road if the profiles are the same length. Generally the same profiles shall be taken along the path of the wheel tracks within each lane, or at 3 ft. from the edge of the pavement and at every 6-ft. interval after that across the pavement.

EXAMPLE

6. The following is an illustration of the calculations:

Section Length (Miles)	Counts (Tenths of an inch)
0.10	5.0
0.10	4.0
0.10	3.5
400 ft. = 0.076	2.0
Total = 0.376	Total = 14.5

$$PrI = \frac{1}{0.376} \times \frac{14.5}{10} = 3.9$$

LIMITATIONS OF COUNT IN 0.1 MILE SECTIONS

7. When the specifications limit the amount of roughness in any one-tenth mile section, the scale is moved along the profile and counts made at various intervals to find those sections that do not conform to specifications.

LIMITS OF COUNTS - JOINTS

8. When counting profiles, a day's paving is considered to include the last portion of the previous day's work, which includes the daily joint. The last 15 to 30 feet of a day's paving cannot usually be obtained until the following day. In general, the paving contractor is responsible for the smoothness of joints if he places the concrete pavement on both sides of the joint. On the other hand, the contractor is responsible only for the pavement placed by him if the work abuts a bridge or a pavement placed under another contract. Profilograph readings when approaching such joints should be taken in conformance with the contract documents.

AVERAGE PROFILE INDEX FOR THE WHOLE JOB

9. When averaging Profile Indexes to obtain an average for the job, the average for each day must be "weighted" according to its length. This is most easily done by totaling the counts for the 0.1-mile sections of a given line or lines and using the total length of the line in the computation for determining the Profile Index.

PART II
DETERMINATION OF HIGH POINTS IN EXCESS OF 0.3 INCH

APPARATUS

10. The only special equipment needed is a plastic template having a line one inch long scribed on one face with a small hole or scribed mark at either end, and a slot 0.3 inch from the parallel to the scribed line (see Figure 2). The one-inch line corresponds to a horizontal distance of 25 feet on the horizontal scale of the profilogram.

LOCATING HIGH POINTS IN EXCESS OF 0.3 INCH

11. The procedure for locating high points in excess of 0.3 inch is given below. If an electronic profilograph is used, these locations are determined automatically (see Part III).

(a) At each prominent peak or high point on the profile trace, place the template so that the small holes or scribe marks at each end of the scribed line intersect the profile trace to form a chord across the base of the peak or indicated bump. The line on the template need not be horizontal. With a sharp pencil, draw a line using the narrow slot in the template as a guide. Any portion of the trace extending above this line will indicate the approximate length and height of the deviation in excess of 0.3 inch.

(b) There may be instances where the distance between easily recognizable low points is less than one inch (25 feet). In such cases, a shorter chord length shall be used in making the scribed line on the template tangent to the trace at the low points. It is the intent however, of this requirement that the baseline for measuring the height of bumps will be as nearly 25 feet (1 inch) as possible, but in no case to exceed this value. When the distance between prominent low points is greater than 25 feet (1 inch) make the ends of the scribed line intersect the profile trace when the template is in a nearly horizontal position. A few examples of the procedure are shown in the lower portion of Figure 2.

PART III
SPECIAL REQUIREMENTS FOR ELECTRONIC TYPE PROFILOGRAPH

APPARATUS

12. The Cox electronic profilograph is the only brand approved for use on Arizona Department of Transportation projects. This apparatus shall be operated in accordance with the manufacturers instructions. The use of the manufacturers recommended settings of 80 for the null band filter, and 8000 for the data filter are mandatory.

EXAMPLE SHOWING METHOD OF DERIVING PROFILE INDEX FROM PROFILOGRAMS

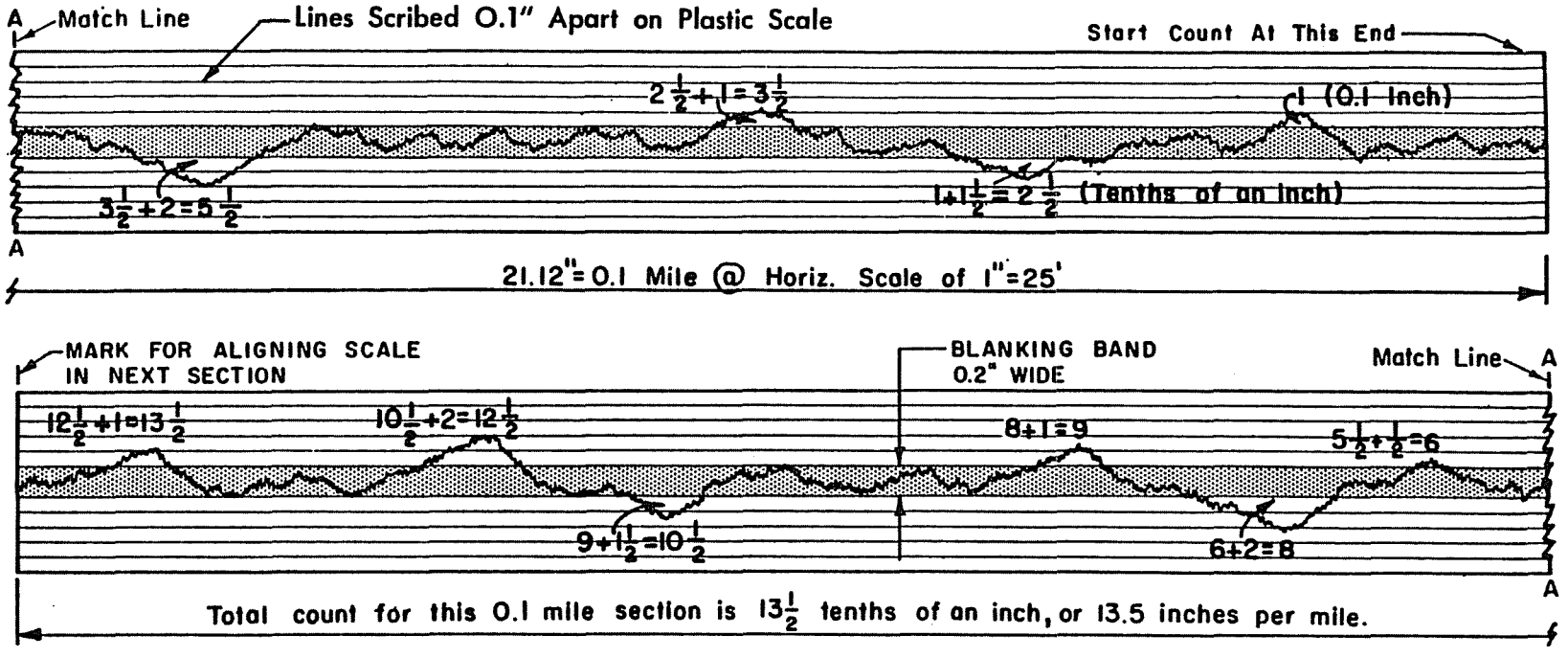

TYPICAL CONDITIONS

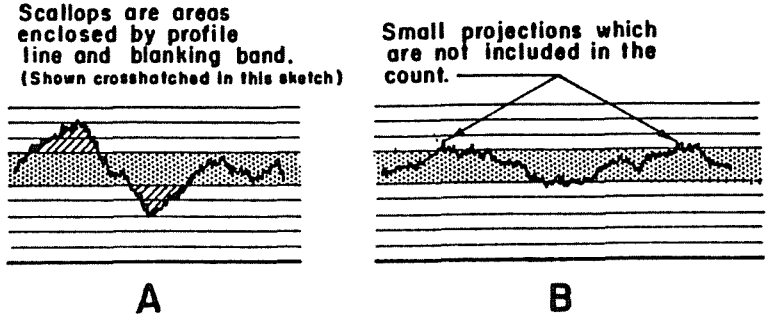

SPECIAL CONDITIONS

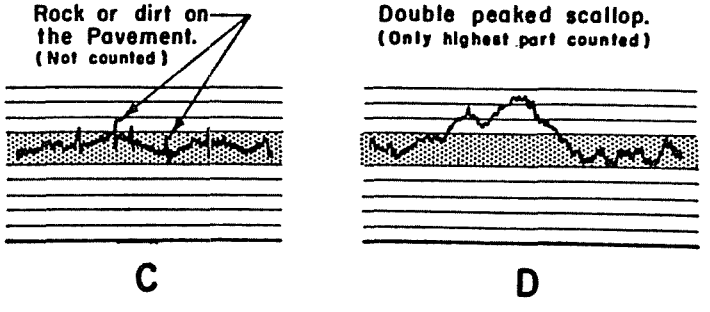

FIGURE 1

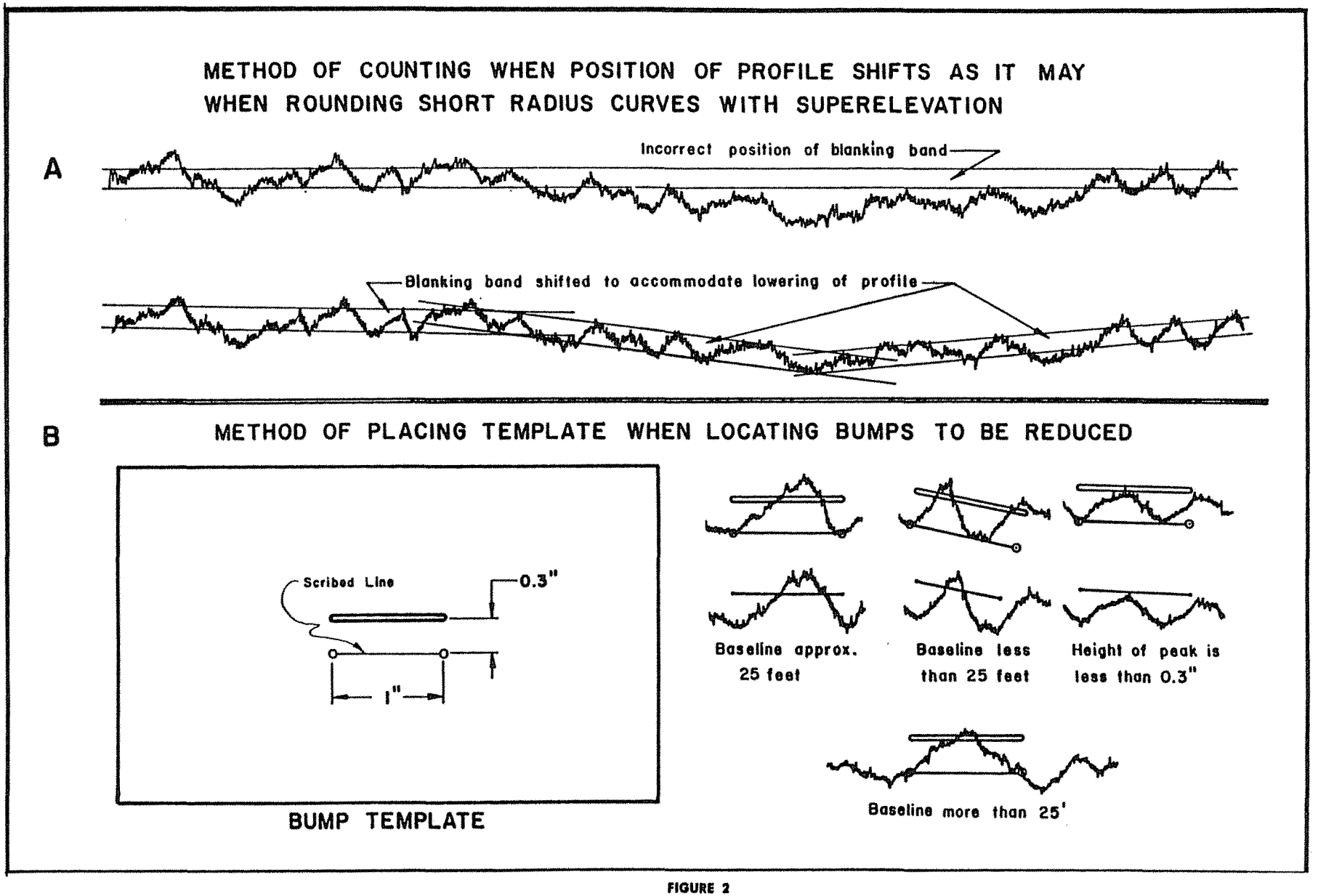
METHOD OF COUNTING WHEN POSITION OF PROFILE SHIFTS AS IT MAY WHEN ROUNDING SHORT RADIUS CURVES WITH SUPERELEVATION
A
Incorrect position of blanking band
Blanking band shifted to accommodate lowering of profile
B
METHOD OF PLACING TEMPLATE WHEN LOCATING BUMPS TO BE REDUCED
Scribed Line
0.3"
1"
BUMP TEMPLATE
Baseline approx. 25 feet
Baseline less than 25 feet
Height of peak is less than 0.3"
Baseline more than 25'

FIGURE 2

EFFECT OF WATER ON STRENGTH OF COMPACTED, TREATED AND UNTREATED BITUMINOUS MIXTURES (IMMERSION COMPRESSION TEST)
(A Modification of AASHTO T 165 and T 167)

Scope

1. This method covers measurement of the loss of strength resulting from the effect of water on compacted bituminous mixtures. A numerical index of retained strength is obtained by comparing the compressive strength of freshly molded and cured specimens with the compressive strength of duplicate specimens that have been immersed in water under prescribed conditions. Provisions are also given for testing specimens which have been treated with a mineral admixture. With some modifications this procedure may be used in testing recycled bituminous mixtures or emulsion mixes.

Apparatus

2. The apparatus shall consist of the following:

(a) Water Bath - An automatically controlled water bath of sufficient size to permit total immersion of the test specimens. It shall have a perforated false bottom or be equipped with a shelf. Either one shall support the specimens at least 1 inch above the bottom of the bath. The bath and shelf or false bottom shall be either lined with or constructed of a non-reactive material. It shall provide accurate and uniform control of a temperature of 140 ± 1.8 F.

(b) A separate, manually or automatically controlled water bath of sufficient size to permit total immersion of the test specimens, and which provides accurate and uniform control for bringing immersed specimens to a temperature of 77 ± 1.8 F. for the compression test. It shall have a perforated false bottom or be equipped with a shelf. Either one shall support the specimens at least 1 inch above the bottom of the bath. The bath and shelf or false bottom shall be either lined with or constructed of a non-reactive material.

NOTE: The water used in both of the above baths shall be distilled water. Only one set of specimens shall be in the 140 F. bath at one time. The 140 F. bath shall be emptied, cleaned, and refilled with fresh distilled water for each set of specimens. The 77 F. water bath shall be drained and cleaned on a regular basis.

(c) Molds - Molding cylinders, and top and bottom molding plungers; the cylinders shall be 4.000 ± 0.005 inches inside diameter by 7 inches in height. The top and bottom plungers shall be

3.985 ± 0.005 inches in diameter: the bottom plungers shall be approximately 2 inches in height and the top plunger shall be approximately 6 inches in height. A baseplate of sufficient size shall be provided to hold mold and plunger assembly.

(d) Support bars - Steel bars to raise mold cylinder during molding operation one inch above the baseplate.

(e) Testing Machine - 50,000-pound capacity minimum, and capable of a head speed of 0.2 inches per minute. For breaking the specimens, the readout shall have a maximum increment of 50 lbs.

(f) Ovens - One oven shall be capable of maintaining a temperature of 255 ± 5 F., one capable of 140 ± 5 F., and another capable of approximately 300 F.

(g) Air Bath - An automatically controlled air bath for storing the specimens at 77 ± 1.8 F.

(h) Transfer plates - A supply of flat transfer plates approximately 5" x 5" of glass or non-reactive material is required.

(i) Balance - A balance sensitive to 1 gram at the maximum weight to be determined.

(j) Mixer - A mechanical commercial dough mixer with a minimum 10 quart capacity and equipped with a wire whip.

Preparation of Samples

3. (a) Three aggregate samples of approximately 3400 grams each (when mineral admixture is used it is added to the aggregate weight), proportioned in that grading determined by design, are required for each test. Each 3400 gram sample will provide 2 specimens when mixed, split and compacted as described below. The weight of aggregate shall be adjusted, if necessary, to produce specimens with heights of 4.0 ± 0.1 inches. A method to adjust the sample weight, if the combined specific gravity of the coarse and fine mineral aggregate is known, which will normally provide specimens within the specified criteria is given in Section 4 of ARIZ 815.

(b) The percent and grade of asphalt, as determined by design tests, shall be used for all specimens prepared for testing.

(c) The temperature of the asphalt and aggregate (and mineral admixture when used) at the time mixing begins shall be in accordance with the following:

Asphalt Grade	Temperature Range
AC 20	300 ± 10 F
AC 30, AC 40	305 ± 10 F.

(d) The aggregates (and mineral admixture when used) shall be dried to constant weight at the temperature required as shown in paragraph 3 (c). Bring the samples to desired weight by adding a small amount of proportioned Pass No. 8 make-up material.

(e) The aggregate (and mineral admixture when used) and asphalt shall be mixed mechanically for 90 to 120 seconds and then hand mixed as necessary to ensure thorough coating.

NOTE: Before each batch is mixed, the mixing bowl and whip shall be at approximately the temperature specified in 3 (c).

(f) Each mixed sample shall be placed on a tarp or sheet of heavy paper and in a rolling motion thoroughly mixed. The material shall be spread into a circular mass 1 1/2 to 2 inches thick. The circular mass shall be cut into equal quarters and opposite quarters taken for each individual sample.

Compaction of Specimens

5. (a) Place the mixtures in an oven maintained at 255 ± 5 F. for 2 hours ± 10 minutes. A mold and bottom plunger for each mixture shall be heated to 255 ± 5 F.

(b) Remove bottom plunger and mold cylinder from oven, place mold assembly on baseplate (bottom plunger in place with mold cylinder supported on the two steel bars). Place paper disc on bottom plunger to prevent material from adhering to the plunger. Place 1/2 of the mixture into molding cylinder and spade mixture vigorously with a heated flat metal spatula with a blade approximately 1" wide and 8" long stiff enough to penetrate an entire layer of material, 15 times around the edge of the mold and 10 times at random into the mixture, penetrating mixture to the bottom of the mold. Place the remaining half of the mixture into the mold and repeat the spading process, being sure to pentrate mixture into the first lift. The top of the mixture should be slightly rounded to aid in firm seating of the upper plunger.

(c) Place a paper disc and then the upper plunger (which has been preheated) on the sample and compress the mixture under an initial load of 150 psi, to set it against the sides of the mold. Remove the support bars and permit full double-plunger action. Apply the load to the mixture at a rate of 0.2 inches per minute until a load of 2750 psi is reached. Hold the load at 2750 psi for 2 minutes.

NOTE: A load of 2750 psi will generally produce specimens that meet the criteria specified for bulk density in Section 6. The loading may be varied if necessary to a minumum of 2000 psi, however, in all cases the requirements for bulk density must be met. Record the load at which the specimens are prepared.

(d) Remove the specimen from the mold. Care shall be taken in extruding the specimen from the mold and after extrusion from the mold to maintain specimen's shape and to prevent tensile stresses in the specimen. Place specimen on a transfer plate.

NOTE: The specimen may be allowed to cool for a maximum of 10 minutes before removal from the mold.

(e) Place specimen and plate in an oven at 140 ± 5 F.

(f) Repeat paragraphs 5 (b) through 5 (e) for the other mixtures.

(g) Specimens shall be cured for 18 hours ± 1/2 hour in an oven at 140 ± 5 F.

Bulk Density Determination

6. (a) Remove specimens from the 140 F. oven and allow to cool on the plate.

NOTE: Cooling may be accomplished in 77 F. air bath, or if more rapid cooling is desired the specimen may be placed in front of a fan until cool.

(b) Determine and record the height and bulk density (ARIZ 415, Method A) of each specimen. The determination of weight in water and S.S.D. weight of each specimen will be completed before the next specimen is submerged for its weight in water determination.

NOTE: Specimens are assumed to be at constant weight after extrusion from the molds.

NOTE: The bulk densities shall not differ by more than 2.5 lbs/cu. ft. If this criteria is not met, the entire set of specimens shall be discarded and a new set prepared.

NOTE: The average bulk density for the specimens shall be between 95.0% and 97.0% of the laboratory determined density for the mixture, at the design asphalt content as determined in ARIZ 815. Some materials will compact to densities outside the above range when compacted at 2750 psi. If the average bulk density is outside the range, all specimens shall be discarded and the test procedure repeated, after determining the amount of load required to produce specimens in the acceptable density range.

(c) Sort the six specimens into two groups of three specimens each so that the average bulk density of the specimens in group 1 is essentially the same as for group 2. Test the specimens in group 1 as specified in Section 7. Test the specimens in group 2 as specified in Section 8.

Determination of Dry Strength

7. (a) Place the test specimens in 77 F. air bath for 4 to 5 hours.

(b) Test each specimen in axial compression without lateral support at a uniform rate of vertical deformation of 0.2 inches per minute. Record the load failure point for each specimen and the average load failure point. Determine the dry strength by converting the average load failure point to pounds per square inch.

NOTE: At least two of the individual load failure points shall be within ± 10% of the average load failure point for the three specimens. If this criteria is not met the entire set of 6 specimens

shall be discarded and a new set prepared. If only two of the three specimens meet this criteria, a new average load failure point is determined using the two values.

Determination of Wet Strength

8. (a) Immerse the test specimens in water on a transfer plate for 24 hours ± 1/2 hour at 140 ± 1.8 F. Make sure all specimens are totally immersed.

(b) Transfer specimens to 77 ± 1.8 F. water bath for 2 hours keeping them on the plates and making sure all specimens are totally immersed.

(c) Remove each specimen from water bath and test in axial compression without lateral support at a uniform rate of vertical deformation of 0.2 inches per minute. Record the load failure point at which each specimen fails and the average load failure point. Determine the wet strength by converting the average load failure point to pounds per square inch.

NOTE: AT least two of the individual load failure points shall be within ± 10% of the average load failure point for the three specimens. If this criteria is not met the entire set of 6 specimens shall be discarded and a new set prepared. If only two of the three specimens meet this criteria, a new average load failure point is determined using the two values.

Calculation

9. (a) The index of retained strength shall be expressed as the percentage of "dry strength" of the specimens. It shall be calculated as follows:

$$\text{Index of Retained Strength} = \frac{\text{Wet Strength of Specimens}}{\text{Dry Strength of Specimens}} \times 100$$

(b) The index of retained strength shall be reported to the nearest 1 percent.

Example

10. An example is shown in Figure 1, which illustrates the recording of test data and results.

ARIZ 802

LAB.# 85-999B PROJECT NO. F-099-9 (11) DATE: 8-21-85

GRADE OF ASPHALT AC 40 % ASPHALT 4.6 ADMIXTURE 2% TYPE II CEMENT

DENSITY DETERMINATION OF DRY IMC SPECIMENS:

SPEC.#	HEIGHT	SSD WT.	H_2O WT.	AIR WT.	SP. GR.	DENSITY	AVERAGE SP. GR.	AVERAGE DENSITY
1	3.996	1765.9	967.2	1759.7	2.203	137.2	2.206	137.4
2	3.981	1760.1	964.9	1753.5	2.205	137.4		
3	3.992	1763.5	964.9	1756.9	2.200	137.1		
4	4.043	1770.8	968.2	1764.2	2.198	136.9		
5	4.012	1767.4	968.9	1762.2	2.207	137.5		
6	3.989	1762.1	971.1	1758.4	2.223	138.5		

DESIGN DENSITY OF STABILITY SPECIMENS = 141.7

% OF LAB DENSITY = $\frac{\text{IMC DENSITY}}{\text{STAB. DENSITY}}$ X 100 = $\left(\frac{137.4}{141.7}\right)$ X 100 = 97.0 %

LOAD: ☒ 2750 psi ☐ OTHER _____ psi

COMPRESSIVE STRENGTH OF DRY SPECIMENS:

SPEC.#	LOAD FAILURE POINT	AVG. LOAD FAILURE POINT	PSI
3	10,566	10,733 ~~11,715~~	854
4	10,900		
* 6	~~13,680~~		

COMPRESSIVE STRENGTH OF WET SPECIMENS:

SPEC.#	LOAD FAILURE POINT	AVG. LOAD FAILURE POINT	PSI
1	6802	6770	539
2	6647		
5	6861		

INDEX OF RETAINED STRENGTH = $\frac{\text{PSI (WET)}}{\text{PSI (DRY)}}$ X 100 = $\left(\frac{539}{854}\right)$ X 100 = 63 %

REMARKS: * SPECIMEN #6 WAS DISCARDED BECAUSE ITS LOAD FAILURE POINT IS OUTSIDE OF THE SPECIFIED ± 10% RANGE.

FIGURE 1

CENTRIFUGE KEROSENE EQUIVALENT OF AGGREGATE INCLUDING K-FACTOR
(A Modification of Test No. Calif. 303)

Scope

1. This method of test furnishes a measure of the surface capacity, including absorption, of both coarse and fine aggregates used in bituminous mixtures. The K-factor is an index that indicates the relative particle roughness or degree of porosity.

Apparatus

2. The apparatus shall consist of the following:

(a) Centrifuge. - A hand or power-driven centrifuge with cover, capable of exerting a force of 400 times gravity (400 G) on a 100-g. sample (See Figs. 1 and 2). The required rpm necessary to achieve this force is determined from the following formula:

$$\text{Required rpm of centrifuge head} = \sqrt{\frac{14,000,000}{r}}$$

Where: R = Radius in inches to center of gravity of sample

(b) Centrifuge Cups. - Aluminum cups 2-13/16 in. in height and 2-1/16 in. in diameter (Fig. 3) with a perforated brass plate containing a minimum

FIGURE 1

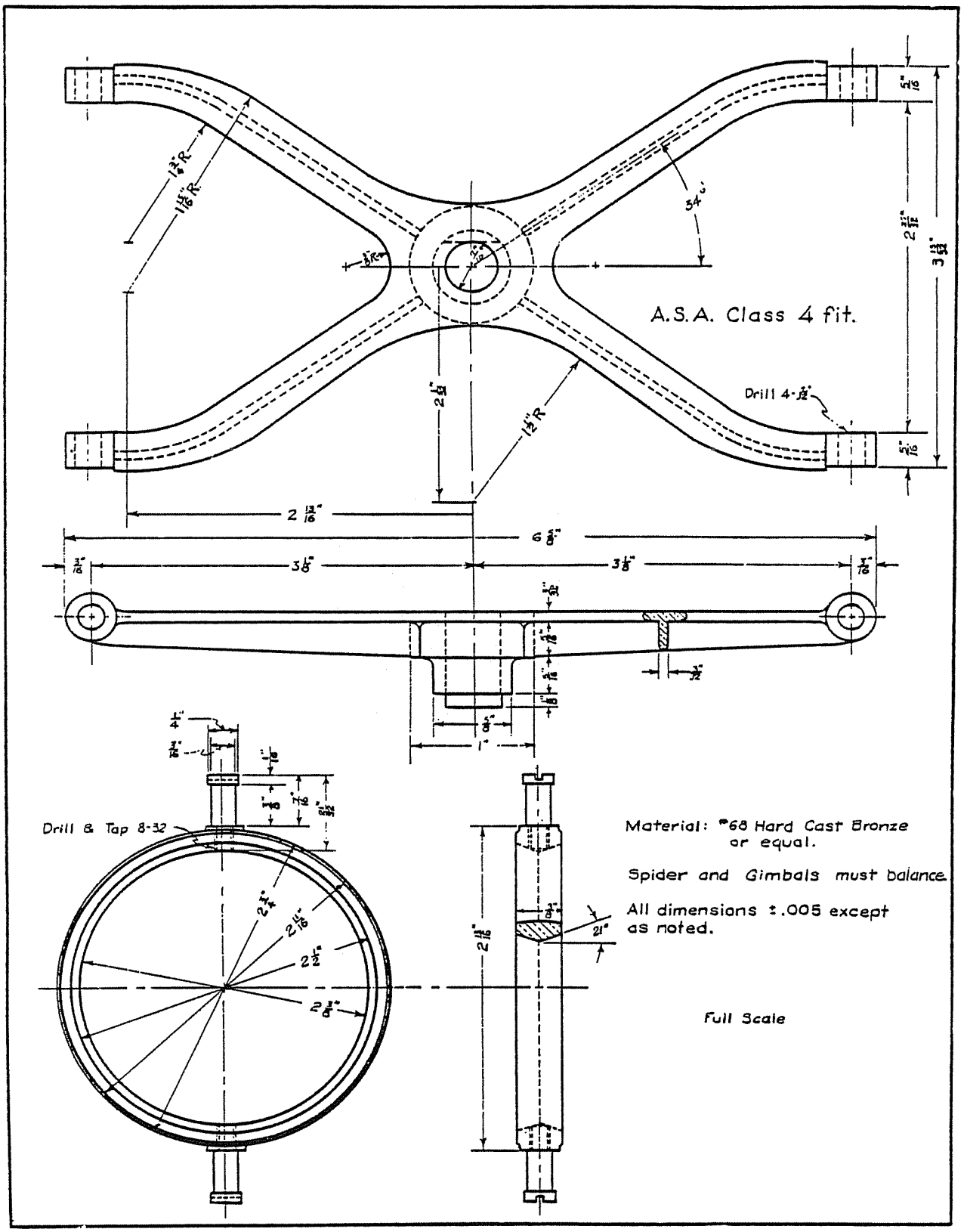

FIGURE 2

DETAILED PLAN OF CENTRIFUGE PARTS

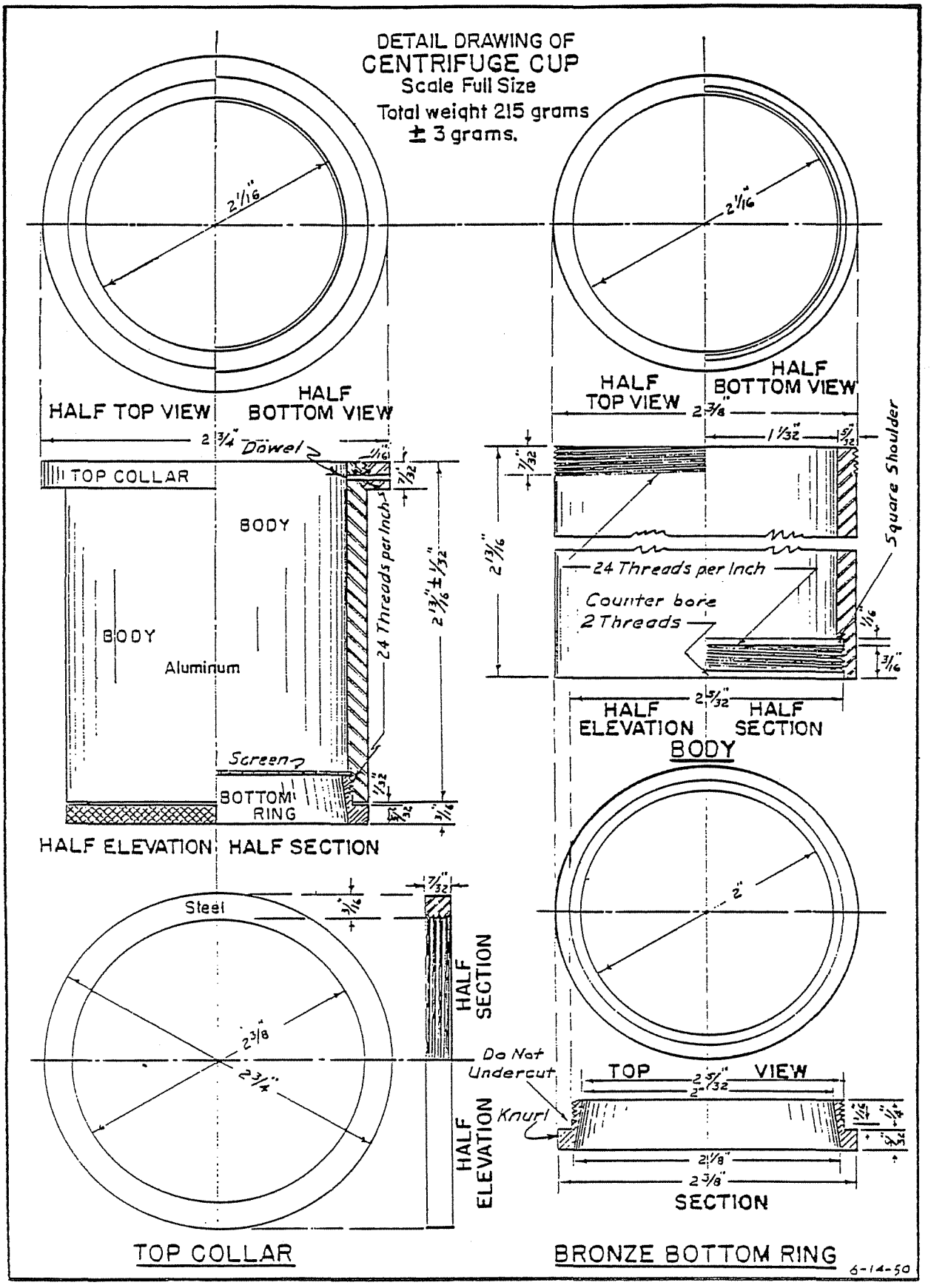
DETAIL DRAWING OF
CENTRIFUGE CUP
Scale Full Size
Total weight 215 grams
± 3 grams.
HALF TOP VIEW
HALF BOTTOM VIEW
Dowel
TOP COLLAR
BODY
BODY
Aluminum
24 Threads per Inch
Screen
BOTTOM RING
HALF ELEVATION
HALF SECTION
HALF TOP VIEW
HALF BOTTOM VIEW
24 Threads per Inch
Counter bore
2 Threads
Square Shoulder
HALF ELEVATION
HALF SECTION
BODY
Steel
HALF SECTION
HALF ELEVATION
TOP COLLAR
Do Not Undercut
Knurl
TOP VIEW
SECTION
BRONZE BOTTOM RING
6-14-50

FIGURE 3

of 100 holes, .062 inches in diameter, per square inch.

(c) Balance. - A torsion balance, 500 g. capacity, accurate to 0.1 g.

(d) Metal funnels. - Top diameter 3.5 in., height 4.15 in., orifice 0.5 in., with a piece of No. 10 sieve soldered to the top of the orifice.

(e) Glass Beakers, 1500 ml. capacity.

(f) Timer with sweep second hand.

(g) Pans, 4.5 in. in diameter, 1 in. deep.

(h) Ovens. - One oven capable of maintaining a temperature of 230° F ± 5° F; and an oven capable of maintaining a temperature of 140° F.

Materials

3. (a) Kerosene, 1 gallon.

(b) S.A.E. No. 10 lubricating oil.

NOTE: *Kerosene and S.A.E. No. 10 lubricating oil shall be supplied as "standard" materials by Central Lab.*

(c) Filter paper, 5.5 cm. diameter, Eaton Dikeman No. 613.

Preparation of Sample

4. (a) Separate the aggregate into two size groups; "C" material, used for K_c determination, passing the 3/8" sieve and retained on the No. 4 sieve; "F" material for K_f determination, all passing the No. 4 sieve.

(b) Determine bulk O.D. specific gravity for fine aggregate ("F" material) by ARIZ 211 - Specific Gravity and Absorption of Fine Mineral Aggregate, and for coarse aggregate ("C" material) by AASHTO T 85 - Specific Gravity and Absorption of Coarse Aggregates.

NOTE: *Bulk O.D. specific gravity which has been determined for plus No. 4 material using additional sizes may be used in lieu of running specific gravity for "C" material as described below.*

(c) The gradation of the aggregate employed is used to calculate the surface area of the aggregates. This calculation consists of multiplying the total percent passing each sieve by a "surface area factor" as set forth in Table 1, and dividing by 100. The sum of all the results represents the equivalent surface area of the sample in terms of square feet per pound.

NOTE: *All surface area factors must be used in the calculation. If a different series of sieves is used, different surface-area factors are necessary. An example of calculations is given in Table II, section 13.*

Procedure

5. Fine aggregate shall be tested as follows:

(a) Obtain a representative minimum 210 g. sample of Pass No. 4 material, place in an oven at 230° ± 5° F, and dry to constant weight.

(b) Allow the sample to cool to room temperature and place exactly 100 g. in weighed centrifuge cup fitted with the perforated metal disk underlying a disk of filter paper.

(c) Prepare the other centrifuge cup in the same manner, with another 100 g. of the same material.

(d) Place the centrifuge cups in a pan containing sufficient kerosene (1/2 in. deep) to saturate the samples by capillary action.

(e) When the samples are saturated, place the cups in the centrifuge, and spin for 2 minutes at a force of 400 G (for hand operated centrifuges this force can be developed by turning the handle about 45 revolutions per minute).

(f) Reweigh the cups with the samples to the nearest 0.1 g. and subtract the original weight. The difference is the percent of kerosene retained (based on 100 g. of dry aggregate). Record the average of the two values for duplicate samples.

NOTE: *If the difference between the two samples exceeds 0.20 grams the test should be run again, taking greater care in obtaining duplicate aggregate samples.*

6. Coarse aggregate shall be tested as follows:

(a) Split out two 105 gram minimum representative samples of the passing 3/8 and retained No. 4 sieve material. (If a 1/4 in. sieve was employed in the coarse sieve analysis, the material retained

TABLE I

SURFACE AREA FACTORS

Total Percent Passing Sieve No.	3/4"	3/8"	4	8	16	30	50	100	200
Surface Area Factor	*	*	2	4	8	14	30	60	160

*Assume surface area for all of plus No. 4 material = 2 sq. ft./lb.

on the 1/4 in. and No. 4 sieve shall be graded in proportion with the weight % retained on the respective sieves.) Place in an oven at 230° F ± 5° F. and dry to constant weight.

(b) Allow to cool at room temperature, then weigh out exactly 100 grams from one of the 105 gram samples and transfer to the funnel. Immerse material in S.A.E. No. 10 lubricating oil for 5 minutes by placing funnel in holder (a 500 ml. glass beaker works very well) and pouring adequate amount of oil over aggregate until sample is entirely covered.

(c) Remove funnel and place in a metal quart can. Drain for 2 minutes, then place can with funnel in an oven set at 140° F. for 15 minutes of additional draining.

(d) Obtain the tare weight of a pan, remove the sample from the oven and pour into the pan, allow to cool and then weigh to the nearest 0.1 gram. The difference between the original sample weight (100 grams) and the final sample weight (weight minus the tare weight of pan) is the percent oil retained.

(e) Subject the other 105 gram sample to the same procedure as shown in paragraphs (b), (c) and (d).

(f) Record the average of the two values for duplicate samples.

NOTE: *If the difference between the two samples exceeds 0.30 grams the test should be run again, taking greater care in obtaining duplicate aggregate samples.*

Calculations

7. K_f

(a) K_f is determined from the following factors:

1) Percent of kerosene retained, which represents the total effect of superficial area, the aggregate's absorptive properties, and surface roughness.

2) Computed surface area, based on particle size.

3) Percent passing No. 4 sieve.

(b) If the specific gravity for "F" is greater than 2.70 or less than 2.60, make corrections for percent of kerosene retained with the following formula:

$$\text{Corrected CKE} = (\%\ \text{kerosene ret.}) \times \frac{\text{Sp. Gr. "F"}}{2.65}$$

(c) Start in the lower left hand corner of the chart in Fig. 4 with the value for CKE corrected for specific gravity; follow the straightedge horizontally to the right to the intersection with calculated surface area; hold the point, move vertically upward to the intersection with the percent passing the No. 4 sieve, hold the point, and follow the straightedge horizontally to the right. The value obtained will be the surface constant for the passing No. 4 fraction "F", or "K_f".

8. K_c

(a) K_c is determined from the percent of S.A.E. No. 10 oil retained, which represents the total effect of superficial area, the aggregate's absorptive properties, and surface roughness.

(b) If the specific gravity for "C" is greater than 2.70 or less than 2.60 apply the correction to oil retained by the following formula:

$$\%\ \text{oil ret. corrected} = (\%\ \text{oil ret.}) \times \frac{\text{Sp. Gr. "C"}}{2.65}$$

(c) Start at the bottom of the chart in Fig. 5 with the corrected percent oil retained, follow the straightedge vertically upward to the intersection with the diagonal line, hold the point, and follow the straightedge horizontally to the left. This value is the surface constant for the retained coarse fraction "C", or "K_c".

9. K_m

(a) K_m represents the mean value of K for a given combination of coarse and fine materials on which K_c and K_f have already been determined.

(b) Use the chart in Fig. 6 to combine K_f and K_c for determination of "K_m".

(c) Start in the lower left hand corner of the chart in Fig. 6 with the value of the total Surface Area, follow straightedge horizontally to the right to the percentage of coarse aggregate (+ No. 4), hold point, and follow straightedge vertically upward to the intersection with the difference between K_c and K_f, hold point, and move horizontally to the right to the "correction to K_f". If (K_c - K_f) is positive K_m is calculated by $K_m = K_f$ + corr. to K_f; if (K_c - K_f) is negative K_m is calculated by $K_m = K_f$ - corr. to K_f. If $K_c = K_f$, the correction is zero, and the chart does not have to be used, K_m simply equals K_f.

10. Bitumen Ratio

(a) The chart in Fig. 7 is used, provided the following factors are known:

1) K_m

2) S.A. (Surface Area of Aggregate)

3) Combined Specific Gravity

$$\text{Combined Sp. Gr.} = \frac{100}{\dfrac{\%\ \text{coarse}}{\text{sp. gr. coarse}} + \dfrac{\%\ \text{fine}}{\text{sp. gr. fine}}}$$

(b) Start in the upper left-hand corner with S.A., follow a straightedge horizontally to the right to the intersection with the combined sp. gr., hold point, and move vertically downward to the intersection with known K_m; hold point, and move horizontally to the right. This value is for liquid asphalt SC-250, MC-250, and RC-250 only.

(c) If a heavier asphalt is used, refer to the chart in Fig 8. By means of a straightedge, connect the point on Scale "A" which represents the grade of bitumen to be used with the point on Scale "B" representing the S.A. of the aggregate. Through the point of intersection on line "C" place the straightedge to connect with the previously determined bitumen ratio value on Scale "D". The intersection with Scale "E" represents the bitumen ratio corrected for viscosity of the bitumen.

11. Percentage of Recommended Bitumen

To convert bitumen ratio to percentage of bitumen on the basis of total mix, use the following formula:

$$\% \text{ recommended bitumen} = \frac{\text{Bitumen Ratio}}{100 + \text{Bitumen Ratio}} \times 100$$

Report

12. Report the % bitumen recommended. Also record K_c, K_f, K_m, the grade of bitumen used, specific gravity of coarse and fine aggregate, CKE values, and bitumen ratio.

Example

13. Using the information given in Table II, and that supplied in (a), the data in paragraph (b), (c), (d) and (e) was calculated by the procedure outlined above.

(a) Percent coarse = 38

Percent fine (pass #4) = 62

Bulk O.D. Sp. Gr. coarse = 2.589

Bulk O.D. Sp. Gr. fine = 2.613

Combined Bulk O.D. Sp. Gr. = $\dfrac{100}{\frac{38}{2.589} + \frac{62}{2.613}} = 2.604$

CKE Results

Fines - uncorrected ret. = 4.3
corrected ret. = 4.3 (No correction: 2.7<sp.gr.>2.6)

Coarse - uncorrected ret. = 3.7
corrected ret. = 3.6

(b) $K_f = 1.25$
$K_c = 1.54$
$(K_c - K_f) = 1.54 - 1.24 = 0.30$
"Correction to K_f" = 0 1
$K_m = K_f$ + correction to K_f ($K_c - K_f$ is positive)
$K_m = 1.24 + 0.1 = 1.34$

(c) Bitumen Ratio = 5.4

(d) Corrected Bitumen Ratio = 6.3
(Corrected using AC-20 grade asphalt)

(e) Percent Bitumen recommended = 5.9%

TABLE II

TOTAL SURFACE AREA CALCULATION

Sieve Size	Percent Passing	x	S.A. Factor	÷	100	=	Surface Area (S.A.)
3/4"	100		-				2.0
3/8"	96		-				
No. 4	62		2				1.24
No. 8	31		4				1.24
No. 16	22		8				1.76
No. 30	16		14				2.24
No. 50	14		30				4.20
No. 100	12		60				7.20
No. 200	9.6		160				15.36
						Total Surface Area =	35.24 sq. ft./lb.

CHART FOR DETERMINING K_f FROM C.K.E.

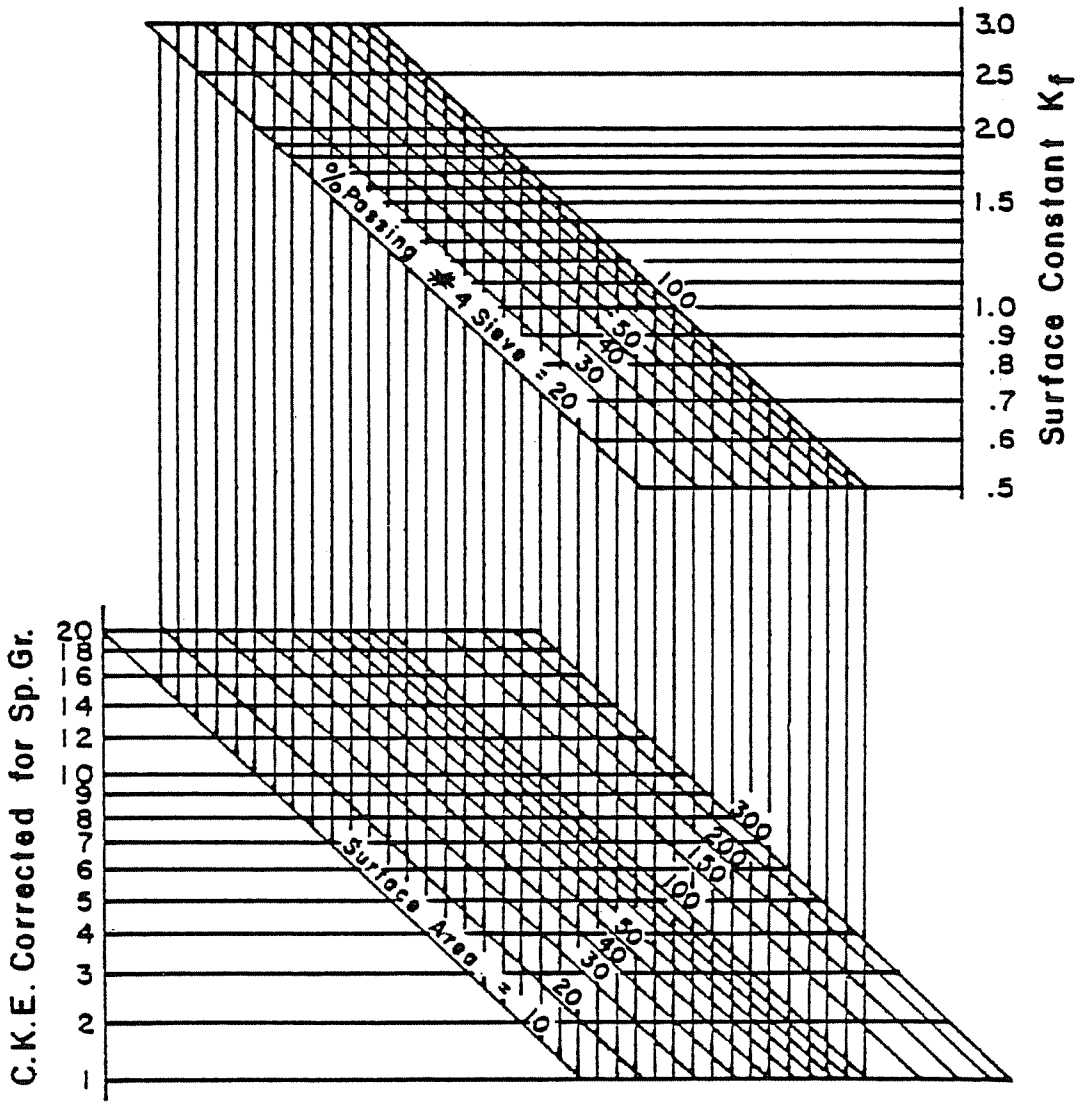

$$\text{C.K.E. Corrected} = \text{C.K.E.} \times \frac{\text{sp. gr. fine}}{2.65}$$

FIGURE 4

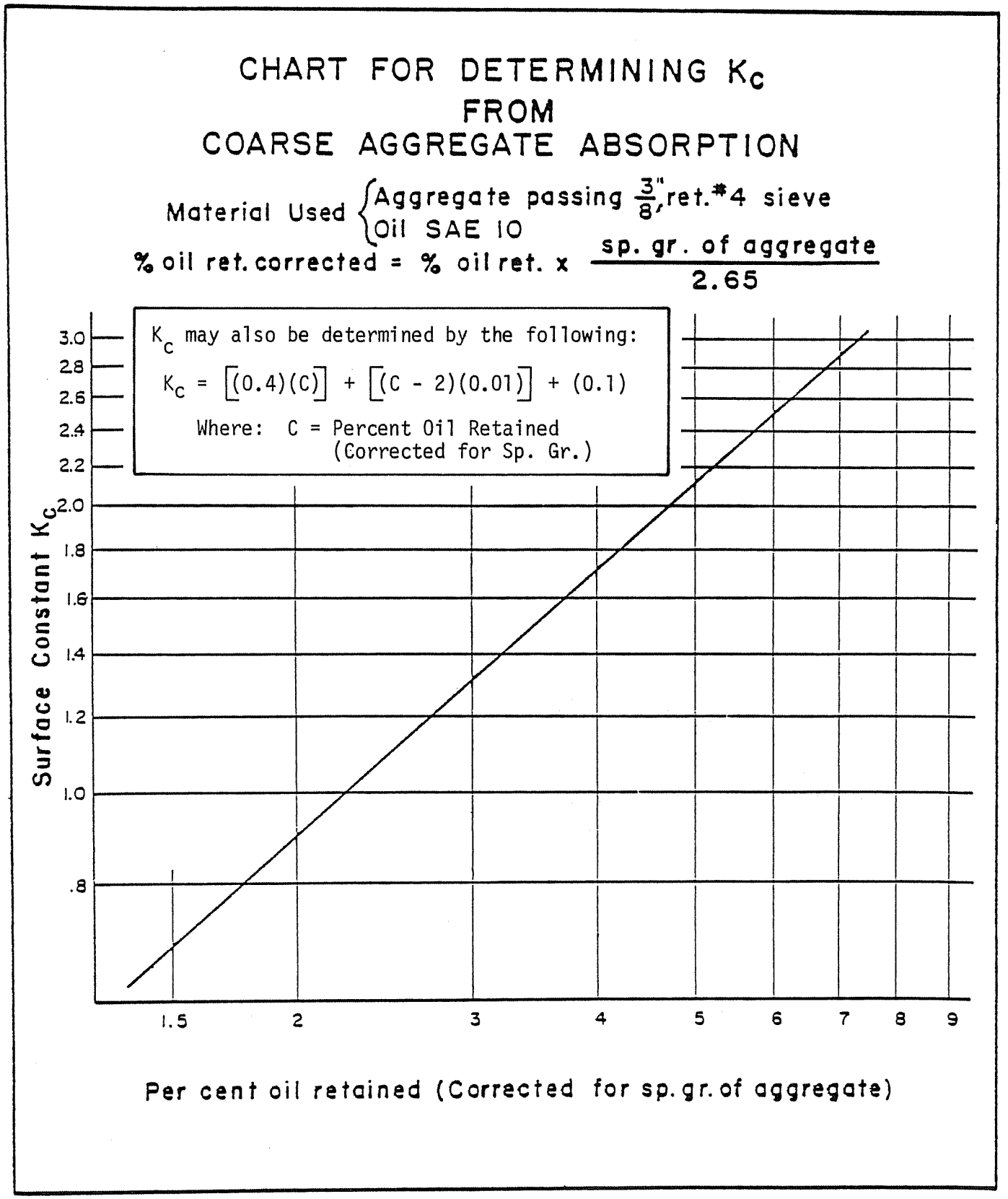
CHART FOR DETERMINING K_C
FROM
COARSE AGGREGATE ABSORPTION
Material Used {Aggregate passing 3/8", ret. #4 sieve
Oil SAE 10
% oil ret. corrected = % oil ret. x sp. gr. of aggregate / 2.65
K_C may also be determined by the following:
$K_C = [(0.4)(C)] + [(C - 2)(0.01)] + (0.1)$
Where: C = Percent Oil Retained
(Corrected for Sp. Gr.)
Surface Constant K_C
3.0
2.8
2.6
2.4
2.2
2.0
1.8
1.6
1.4
1.2
1.0
.8
1.5
2
3
4
5
6
7
8
9
Per cent oil retained (Corrected for sp. gr. of aggregate)

FIGURE 5

CHART FOR COMBINING K_f AND K_c TO DETERMINE K_m

If $(K_c - K_f)$ is negative,
$K_m = K_f$ - correction to K_f
If $(K_c - K_f)$ is positive,
$K_m = K_f$ + correction to K_f
If $K_c = K_f$, $K_m = K_f$

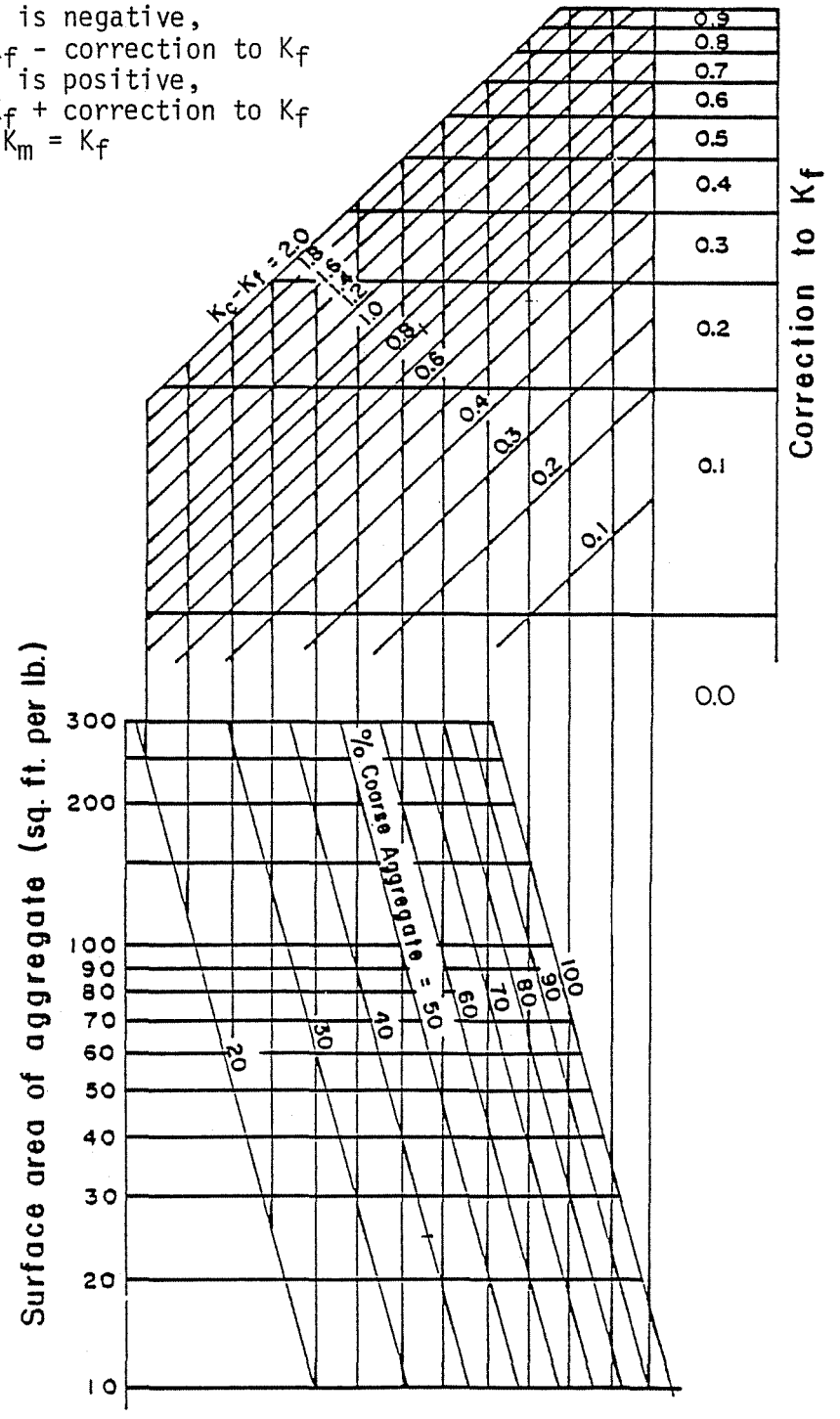

FIGURE 6

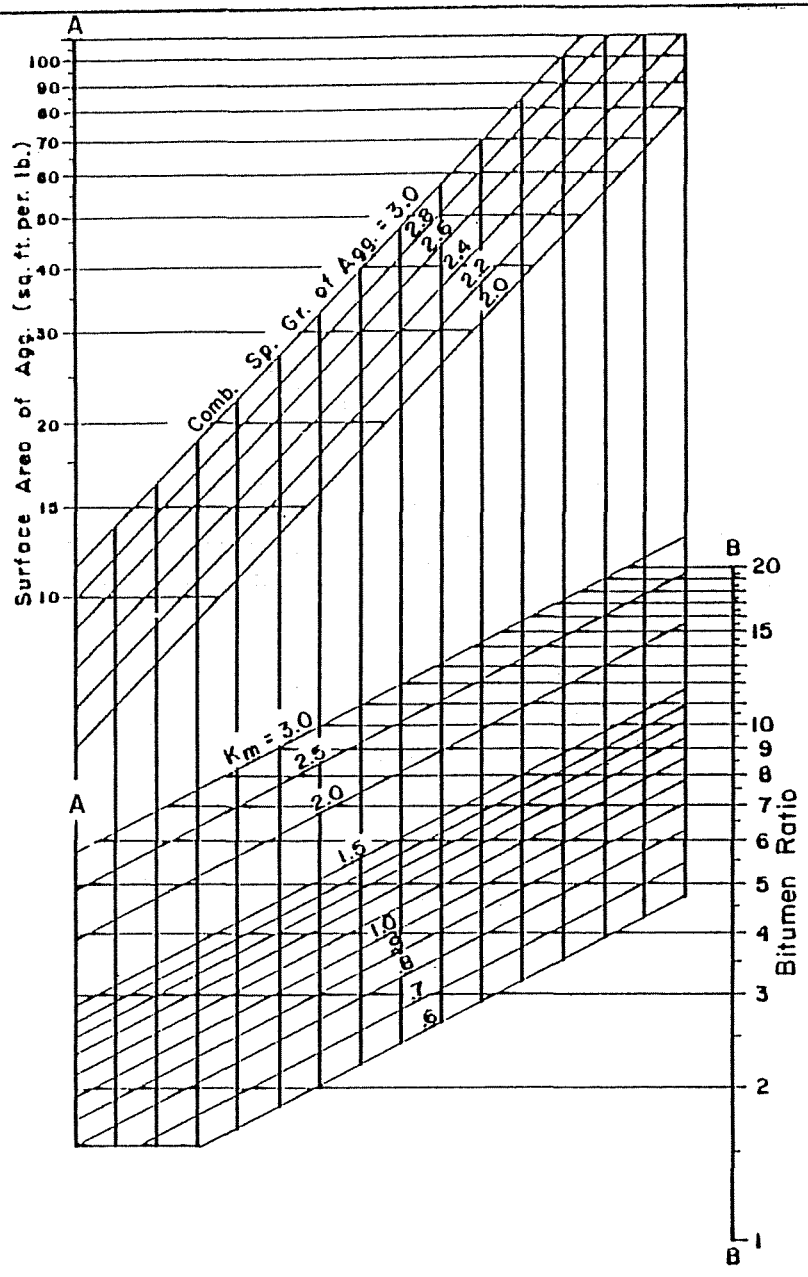

CHART FOR DETERMINING BITUMEN RATIO

PROCEDURE

Given surface area, combined sp. gr., and K_m of aggregate.

Find surface area on scale A. Proceed horizontally to line corresponding to combined sp. gr. of aggregate. Then down to line corresponding to K_m. Then horizontally to scale B for Bitumen Ratio.

Bitumen Ratio = lbs. of bitumen per 100 lbs. of aggregate and applies directly to asphalt of SC 250, MC 250, and RC 250 grades. The bitumen ratio is converted to percent bitumen (based on total mix) by the following:

$$\% \text{ Bitumen} = \frac{\text{Bitumen Ratio}}{100 + \text{Bitumen Ratio}} \times 100$$

When heavier liquid or paving asphalts are used a correction must be made to the bitumen ratio. See Figure 8.

FIGURE 7

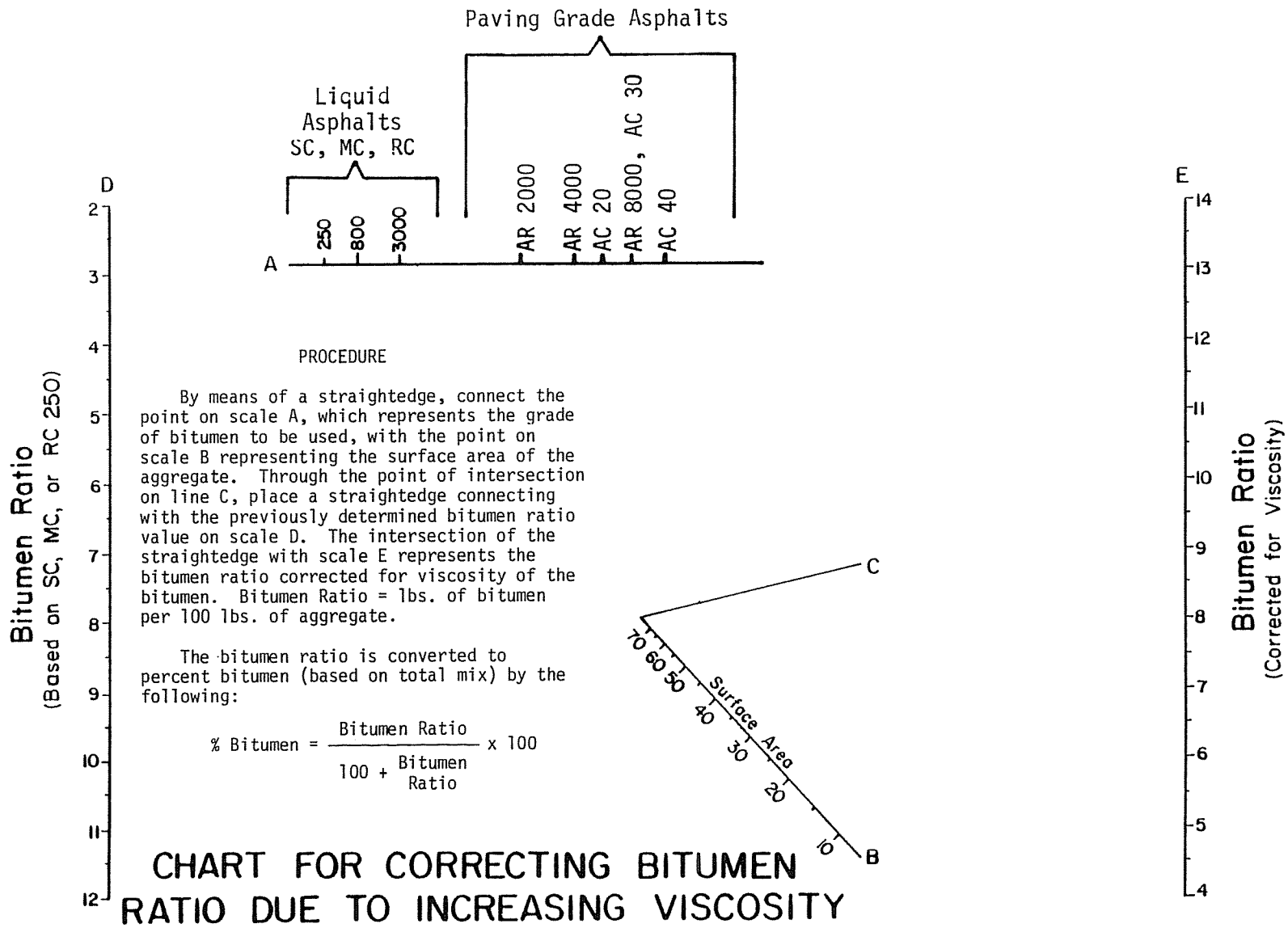

PROCEDURE

By means of a straightedge, connect the point on scale A, which represents the grade of bitumen to be used, with the point on scale B representing the surface area of the aggregate. Through the point of intersection on line C, place a straightedge connecting with the previously determined bitumen ratio value on scale D. The intersection of the straightedge with scale E represents the bitumen ratio corrected for viscosity of the bitumen. Bitumen Ratio = lbs. of bitumen per 100 lbs. of aggregate.

The bitumen ratio is converted to percent bitumen (based on total mix) by the following:

$$\% \text{ Bitumen} = \frac{\text{Bitumen Ratio}}{100 + \text{Bitumen Ratio}} \times 100$$

CHART FOR CORRECTING BITUMEN RATIO DUE TO INCREASING VISCOSITY

FIGURE 8

MAXIMUM THEORETICAL SPECIFIC GRAVITY OF LABORATORY PREPARED BITUMINOUS MIXTURES (RICE TEST)

(A Modification of AASHTO T 209)

SCOPE

1. This method of test is intended for determining the maximum specific gravity of uncompacted bituminous mixtures which have been prepared in the laboratory.

APPARATUS

2. The apparatus shall consist of the following:

(a) Balance - A balance accurate to 0.1 gram at the maximum weight to be determined.

(b) Container - A heavy walled Erlenmeyer flask having a capacity of at least 1500 ml. strong enough to withstand a partial vacuum; the cover shall consist of a rubber stopper with a tight hose connection. A small piece of No. 200 wire mesh covering the hose opening shall be used to minimize the possibility of loss of fine material.

NOTE: If a procedure which subjects multiple flasks to a vacuum simultaneously is used, the vacuum gauge shall be placed beyond the last bottle to insure that all the bottles are being subjected to the same amount of vacuum.

(c) Glass cover plate large enough to cover mouth of the flask.

(d) Vacuum pump for evacuating air from the container.

(e) Ovens - One oven capable of maintaining a temperature of 255° ± 5°F and one capable of maintaining approximately 300°F.

(f) Distilled water - All water used in this procedure shall be distilled water.

(g) Mixer - A mechanical commercial dough mixer with a minimum 10 quart capacity and equipped with a wire whip.

CALIBRATION OF FLASK

3. Calibrate the flask by accurately determining the weight of water at 77° ± 1°F required to fill it completely. Use of a glass cover plate is required to ensure accurate filling. Record the weight of the flask + water to the nearest 0.1 gram as "B".

PREPARATION OF SAMPLES

4. (a) One aggregate sample of 3000 grams, proportioned in that grading determined by design, is required for each test. The 3000 gram aggregate sample will provide 3 test samples when mixed and split as described below.

(b) To minimize stripping of the asphalt from the aggregate, pre-weigh a 300 to 500 gram sample of asphalt and add to this 1.0% of a suitable anti-stripping agent by weight of asphalt. This mixture will be designated as "binder" in this test.

NOTE: Pave Bond Special is the preferred anti-stripping agent.

(c) The percent binder used shall normally be 6.0%.

NOTE: A binder content of 6.0% will normally give satisfactory results, although aggregate characteristics and gradation may require adjustment in percentage of binder to be used.

(d) The temperature of the asphalt and aggregate at the time mixing begins shall be in accordance with the following:

Asphalt Grade	Temperature Range
AC 20	300° ± 10°F
AC 30, AC 40	305° ± 10°F

(e) The aggregate shall be dried to a constant weight, at the temperature required as shown in paragraph 4 (d). Bring samples to desired weight by adding a small amount of proportioned Pass No. 8 makeup material.

(f) The aggregate and asphalt shall be mixed mechanically for 90 to 120 seconds and then hand mixed as necessary to ensure thorough coating.

NOTE: Before each batch is mixed, the mixing bowl and whip shall be at approximately the temperature specified in 4 (d).

(g) The mixed sample shall be placed on a tarp or sheet of heavy paper and in a rolling motion thoroughly mixed. The material shall be spread into a circular mass 1 1/2 to 2 inches thick. The circular mass shall be cut into 6 equal segments taking opposite segments for each individual sample.

(h) Place samples in an oven maintained at 255° ± 5°F and cure for 2 hours ± 5 minutes. After curing, spread each sample on a sheet of heavy paper or in a large flat bottom pan. Before the samples are completely cooled separate the particles of the mixture, taking care not to fracture the mineral particles, so that the particles of the fine aggregate portion are not larger than 1/4 inch. Allow the samples to cool to room temperature.

PROCEDURE

5. For each sample the procedure below shall be followed:

(a) Place the sample in the flask and determine weight of sample to the nearest 0.1 gram. This is designated as the "weight of sample in air", or "Wmm".

NOTE: Care should be taken in mixing and transferring of the samples to the flask so that there is no more than an 18 gram difference between the total weight of aggregate and binder before mixing and the total "weight of the samples in air".

(b) Add sufficient water, which has been treated with a wetting agent, to cover the sample.

NOTE: A suitable wetting agent such as Aerosol OT in a concentration of 0.01%, or 1 ml. of 10% solution per 1000 ml. of water, shall be used to facilitate the release of entrapped air.

(c) Remove entrapped air by subjecting the contents of the flask to a partial vacuum, with a minimum of 20 inches mercury for 15 ± 2 minutes. Agitate the contents three or four times within this period, to dislodge trapped air bubbles.

CAUTION: Do not agitate the sample too frequently or vigorously; this can cause stripping of the film from some particles, resulting in erroneous specific gravities.

(d) After the evacuation period, fill the flask completely with water, slide a preweighed glass cover plate over the mouth of the flask, and weigh immediately to the nearest 0.1 gram. The temperature of the flask, water, and sample shall be between 72°F and 80°F. Record as the weight of the "flask + water + sample", or "C".

(e) The entire contents of the flask shall be poured into a nest of sieves consisting of a No. 40 and a No. 200 screen.

NOTE: If stripping has occurred, as evidenced by discoloration of water in the flask, significant loss of minus No. 200 material may be expected. Provisions for the recovery and addition of this material to the Plus No. 200 material shall be made.

(f) Allow mix to drain through the sieves until excessive moisture is removed from mix. Spread the material retained on the No. 40 and No. 200 sieves in a pan and place before an electric fan to remove surface moisture. The air through the fan shall be at room temperature and no heat shall be used to dry the mix.

(g) After evaporation of excess moisture is observed, weigh mix at 15 minute intervals and when the weight loss is less than 0.5 gram for this interval the mix is considered to be surface dry. Record the surface dry weight as "Wsd". Intermittent stirring of the sample is required during the drying period. Conglomerations of mix shall be broken by hand. Care must be taken to prevent loss of particles of mixture.

NOTE: If the "Wsd" weight for any of the three samples is less than its corresponding "Wmm" weight the samples shall be discarded and a set of three new samples shall be prepared and tested.

CALCULATIONS

6. (a) The Volume of Voidless Mix, "Vvm", in ml. is determined for each sample by the following:

$$Vvm = Wsd + B - C$$

Where: Wsd = Surface Dry Weight
B = Weight of Flask + Water
C = Weight of Flask + Water + Sample

(b) The Maximum Specific Gravity, "Gmm", is determined for each sample by the following:

$$Gmm = \frac{Wmm}{Vvm}$$

(c) Compare the three individual values for maximum specific gravity. If the range of the three is within 0.014, all are used to determine the average maximum specific gravity as

shown in paragraph (d) below. If the range is greater than 0.014, the average of two may be used if they are within a range of 0.007. If values are not achieved within the above criteria, the samples shall be discarded and a set of three new samples shall be prepared and tested.

NOTE: For recycle mixes the above criteria shall be replaced with 0.024 for the range of three and 0.012 for two.

(d) The average maximum specific gravity of the bituminous mix is determined for the samples with acceptable maximum specific gravity values, and recorded to the nearest 0.001 unit.

(e) To determine the maximum density, the average maximum specific gravity is multiplied by 62.3 lbs/cu ft.

EXAMPLE

7. An example of the calculations is shown in Figure 1.

NOTE: The form shown in Figure 1 contains equations which shall be used to determine the combined bulk oven dry specific gravity of aggregate, the effective specific gravity of aggregate, and the asphalt absorption. These values are utilized in determining the voids relationships for the bituminous mixture. The areas provided on the form in Figure 1 may be conveniently used to perform these calculations.

ARIZONA 806

LAB. NO.: 88-999B PROJECT NO.: F-099-9(11) DATE: 1-12-88
PROJECT NAME: CHRISTMAS CANYON - CLAUS T.I. MATERIAL TYPE: 3/4" A.C.
GRADE OF ASPHALT: AC 40 SPECIFIC GRAVITY OF ASPHALT: 1.023 PERCENT OF ASPHALT: 6.0
TESTED BY: JOE TESTER CHECKED BY: S.C.

FLASK NUMBER	WEIGHT OF FLASK	"Wmm" WEIGHT OF SAMPLE IN AIR	(B) FLASK + WATER	(C) FLASK + WATER + SAMPLE	"Wsd" SURFACE DRY WEIGHT	"Vvm" VOLUME OF VOIDLESS MIX (Wsd+B-C)	"Gmm" MAX. SP. GR. "Wmm" / "Vmm"	MAXIMUM DENSITY LBS. PER CU. FT. "Gmm"x 62.3
1	1185.9	1057.6	3429.9	4046.7	1058.4	441.6	2.395	
2	1280.0	1059.2	3499.2	4116.1	1060.3	443.4	2.389	
~~3~~	~~1178.1~~	~~1057.2~~	~~3436.1~~	~~4053.6~~	~~1057.1~~	~~439.6~~	~~2.405~~	
AVERAGE							2.392	149.0

MIX WT. - TOTAL SAMPLE WT. = LOSS OF GRAMS = 8.4

FLASK NUMBER:	1	2	3
WT. OF SAMPLE AND FLASK	2243.5	2339.2	2235.3
WT. OF SAMPLE, FLASK, WATER AND GLASS PLATE	4201.8	4271.2	4208.7
WT. OF GLASS PLATE	155.1	155.1	155.1

% COARSE AGG. = 41 % FINE AGG. = 59
COARSE AGG. BULK O.D. SP. GR. = 2.558 FINE AGG. BULK O.D. SP. GR. = 2.589
COMBINED AGG. BULK O.D. SP. GR. (Gsb) =

$$= \frac{100}{\frac{\%\ \text{COARSE}}{\text{COARSE AGG. BULK O.D. SP. GR.}} + \frac{\%\ \text{FINE}}{\text{FINE AGG. BULK O.D. SP. GR.}}} = \frac{100}{\frac{(41)}{(2.558)} + \frac{(59)}{(2.589)}} = 2.576$$

EFFECTIVE SPECIFIC GRAVITY OF AGGREGATE (Gse) =

$$= \frac{(100) - (\%\ \text{ASPHALT})}{\frac{(100)}{(\text{Gmm})} - \frac{(\%\ \text{ASPHALT})}{(\text{ASPHALT SP. GR.})}} = \frac{(100) - (6.0)}{\frac{(100)}{(2.392)} - \frac{(6.0)}{(1.023)}} = 2.615$$

ASPHALT ABSORPTION (Pba) =

$$\left[\frac{(\text{Gse}) - (\text{Gsb})}{(\text{Gse}) \times (\text{Gsb}}\right] \times (\text{ASPHALT SP. GR.}) \times (100) =$$

$$= \left[\frac{(2.615) - (2.576)}{(2.615) \times (2.576)}\right] \times (1.023) \times (100) = 0.59$$

REMARKS: FLASK #3 ELIMINATED DUE TO BEING OUTSIDE 0.014 ALLOWABLE RANGE.

FIGURE 1

DESIGN OF SLURRY SEAL

(A Modification of Test No. Calif. 355)

Scope

1. This method is intended for use in determining the total liquid content for proper workability and the optimum asphalt content for a slurry seal. This test method also furnishes an index of the slurry seal mixture's resistance to abrasion in the presence of water.

Apparatus

2. The apparatus shall consist of the following:

(a) Centrifuge, hand or power driven, capable of exerting a force of 400 times gravity (400 G) on a 100 g. sample.

$$\text{Required rpm of centrifuge head} = \sqrt{\frac{14{,}000{,}000}{r}}$$

Where:

r = radius in inches to center of gravity of sample.

(b) Centrifuge cups, 2 13/16 in. in height, 2 1/16 in. in diameter, complete with perforated brass plate 0.031 in. thick with minimum of 100 holes, 0.062 in. in diameter, per square inch.

(c) Balance, 500 g. capacity, accurate to 0.1 g.

(d) Drying oven or hot plate.

(e) Assortment of round metal pans.

(f) Scale, 2 kg. capacity, accurate to 1 g.

(g) Circular metal rings, 10 in. in inside diameter with vertical sides ¼ in. deep.

(h) Abrasion apparatus, as shown in Fig. 2.

(i) Mechanical mixer (bituminous mix) or other power device capable of driving abrasion apparatus at 33 rpm (Fig. 1).

(j) Special plastic cylinder, 500 ml., with valve at bottom (see Fig. 4).

(k) Kerosene.

(l) Filter paper, Eaton Dikemann Co., size 5½ cm., No. 611.

(m) Roofing Felt, 50-60 lb. weight.

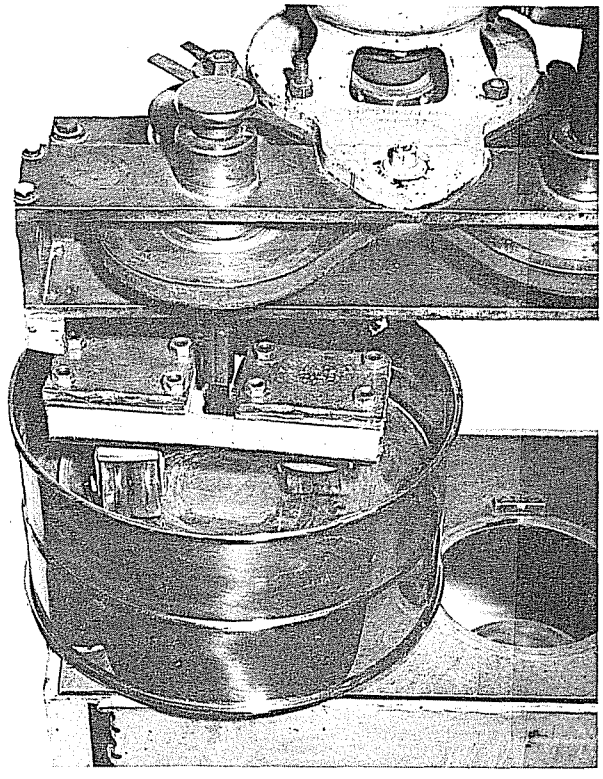

FIGURE 1

Preparation of the Sample

3. (a) Weigh out approximately 105 g. of representative aggregates.

(b) Dry to constant weight and allow to cool to room temperature.

Determination of Surface Area and Absorption

4. (a) Place sample in a tared centrifuge cup containing filter paper and adjust the weight of the material to exactly 100 g.

(b) Place the cup and sample in the centrifuge, quickly pour about 20 ml. of kerosene over the sample and immediately centrifuge for 2 minutes at a force of 400 G.

NOTE: *The centrifuge must be in operation within 5 seconds after adding kerosene, as an additional time allows the kerosene to be absorbed by the aggregate and will not represent true surface area.*

(c) Weigh centrifuged sample to the nearest 0.1 g. and record the amount of kerosene retained. Correct for specific gravity as follows:

ABRADING ASSEMBLY

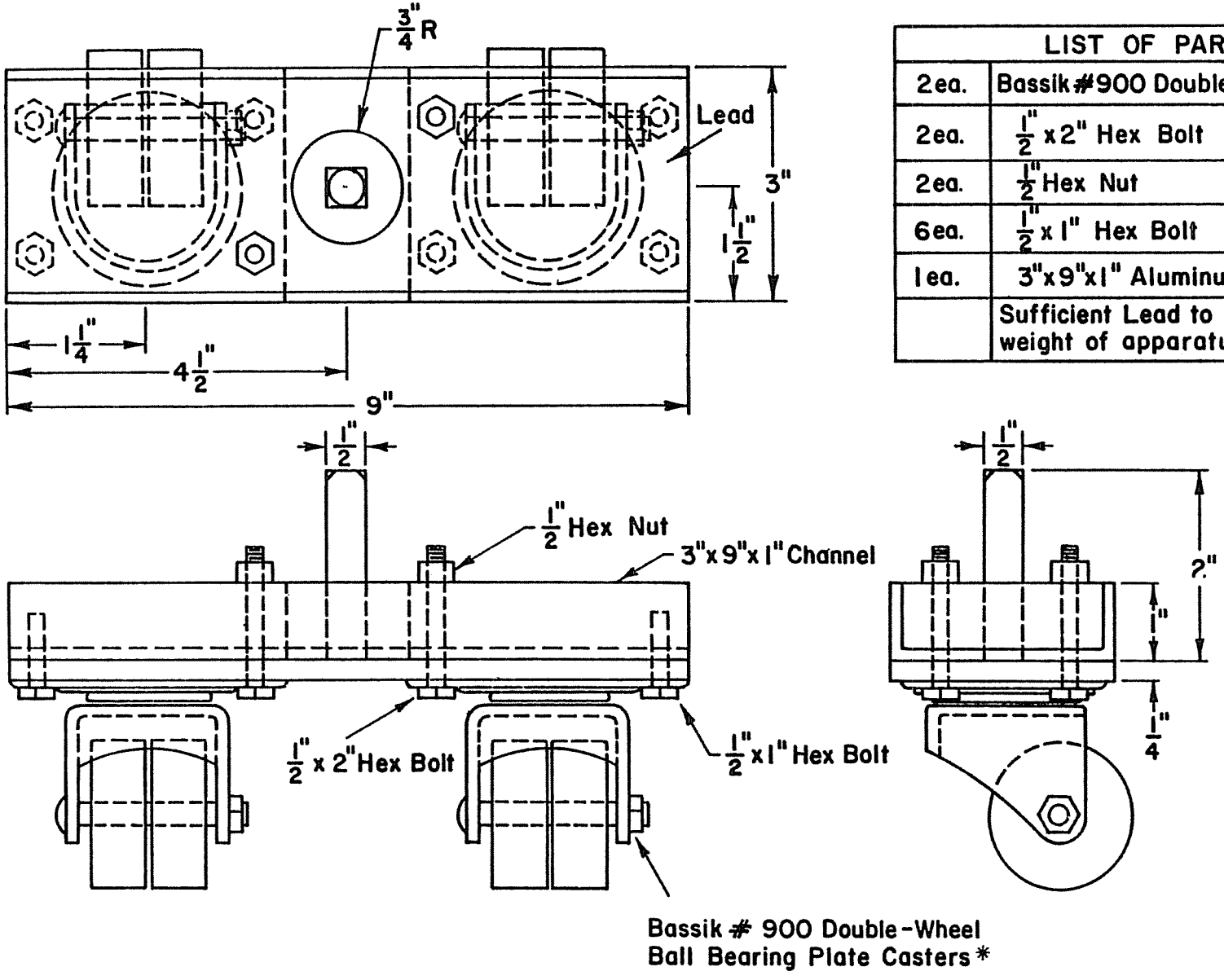

LIST OF PARTS	
2ea.	Bassik #900 Double Wheel Casters
2ea.	1/2" x 2" Hex Bolt
2ea.	1/2" Hex Nut
6ea.	1/2" x 1" Hex Bolt
1ea.	3"x9"x1" Aluminum Channel
	Sufficient Lead to make total weight of apparatus 13.5 lbs.

* Wheels machined for true flat surface.

FIGURE 2

$$\text{Correction} = \frac{\text{(g. kerosene ret.)} \times \text{avg. sp. gr. agg.}}{2.65}$$

(d) Use the surface area chart in Fig. 3. Place the straightedge on the horizontal line representing the corrected amount of kerosene retained; follow straightedge horizontally to the right to the point of intersection with the diagonal line and then move vertically downward to the intersection with the bottom scale to obtain the surface area.

(e) After step (c), place the sample and cup in a small pan containing a ½-in. depth of kerosene and pour approximately 35 ml. of kerosene over the sample. Allow to soak for 10 minutes.

(f) Remove the sample from the bath and centrifuge for 2 minutes at a force of 400 G.

(g) Reweigh and record the amount of kerosene retained. Make a correction for specific gravity as in step (c).

(h) Subtract the correction result in (c) above from the result of (g) and record the difference as the absorption.

Total Liquid Content of Mixture

5. (a) Pour 500 g. of quartered aggregate into the tared plastic cylinder (Fig. 4). Add water slowly from the bottom by attaching a length of hose between a water faucet and the valve at the bottom of the graduate until free water appears on the surface of the sample.

(b) Record the total weight of the water.

NOTE: *If the aggregate column breaks up during addition of water, rod with a small metal rod until the column goes back together.*

(c) The above procedure will establish the maximum amount of liquid (emulsion plus water) that the aggregate can accommodate.

Optimum Asphalt Content

6. (a) Quarter out 3 separate 500-g. samples of aggregate for fabrication of test specimens.

(b) Add 5.0 percent water by weight of the dry material, to the first test sample and mix thoroughly. Plot the surface area of the material on Fig. 5 or Table 1 to determine the amount of emulsion required to give an asphalt film thickness of 9 microns. Add this amount of emulsion plus sufficient water to bring to the previously established total liquid content (section 5). This added amount of water will be in addition to the 5.0 percent added for initial mixing. Mix thoroughly.

TABLE 1
CONVERSION TABLE *

	PER CENT ASPHALT TO FILM THICKNESS(μ)									
Surface Area	2.0%	4.0	6.0	8.0	10.0	12.0	14.0	16.0	18.0	20.0
45	2.2μ	4.4	6.5	8.7	10.9	13.1	15.2	17.4	19.6	21.8
50	2.0	3.9	5.9	7.8	9.0	11.8	13.7	15.7	17.8	19.6
55	1.8	3.6	5.4	7.1	8.9	10.7	12.5	14.3	16.1	17.8
60	1.6	3.3	4.9	6.5	8.2	9.8	11.5	13.1	14.8	16.3
65	1.5	3.0	4.6	6.0	7.5	9.1	10.6	12.1	13.6	15.1
70	1.4	2.8	4.2	5.6	7.0	8.4	9.8	11.2	12.6	14.0
75	1.3	2.6	3.9	5.2	6.5	7.8	9.1	10.4	11.8	13.1
80	1.2	2.4	3.7	4.9	6.1	7.3	8.6	9.8	11.0	12.3
85	1.2	2.3	3.5	4.6	5.7	6.9	8.1	9.2	10.4	11.5
90	1.1	2.2	3.3	4.4	5.4	6.5	7.6	8.7	9.8	10.9
95	1.0	2.1	3.1	4.1	5.2	6.2	7.2	8.2	9.3	10.3
100	1.0	1.9	2.9	3.9	4.9	5.9	6.9	7.8	8.8	9.8

* Based on 60% asphalt in the emulsion.

(c) Place a metal ring on a disk cut from roofing felt to the outside diameter of the ring, and flow the mixed material into the ring. Strike off excess material flush with the top of the ring and allow to stand at room temperature for 15 minutes.

(d) Remove the metal ring and place the test specimen with supporting disk in a 140° F oven to dry to constant weight. Record the weight, after allowing specimen to cool to room temperature.

(e) In order to provide a range for visual inspection and evaluation of the abrasion test, repeat the above procedure on the other 2 samples using appropriate percentages of asphalt required (Fig. 5) to provide about 1 micron film thickness above and below the 9 micron level.

Resistance to Abrasion

7. (a) Place the 3 specimens that were prepared in section 6 in pans and cover each with 350 ml. of water at room temperature. Allow to soak for 1 hour.

(b) Place the pan with specimen and water in abraiding unit and abraid for 15 minutes.

(c) Remove the specimen from the bath and dry in a 140° F oven to constant weight. Subtract this weight from the oven-dry weight before the abrasion test (section 6.(d) above). This difference represents abrasion loss.

(d) Repeat steps (b) and (c) for the other 2 specimens. Multiply the grams lost in abrasion by 6.20. This equal grams abraided per square foot. The quantity 6.20 is a constant designating the area encompassed by the wheel track (1/6.20 sq. ft.). If the dimensions of the wheels are changed, this factor must be adjusted.

NOTE: *Determining optimum asphalt content for a slurry seal mixture will depend on the judgment of the individual. This mixture after curing should present a dense, voidless mastic-like appearance, black in color, with no visible signs of free asphalt. Excessive loss in the abrasion test will normally be indication of insufficient asphalt and an excess of asphalt will usually be evidenced by the mixture picking up on the rubber wheels of the abrasion apparatus.*

An abrasion loss in excess of 100 g. per square foot of surface on the specimen determined to have optimum asphalt content will be cause for rejection of the mixture. Causes of the excessive abrasion loss for this specimen can usually be attributed to hydrophylic aggregates or possibly to a faulty emulsion which tends to separate and inadequately coat the aggregate particles. Additional mixtures should be tested in which the emulsion in question is mixed with an aggregate of known non-hydrophylic characteristics. In addition, the aggregates in question should be tested with an emulsion from a different source to isolate the cause of the abrasion loss.

SURFACE AREA CHART

$$\text{Corrected Amount Kero. Ret.} = \frac{\text{Grams Kero. Ret. by Sample x average Sp. Gr. of Agg.}}{2.65}$$

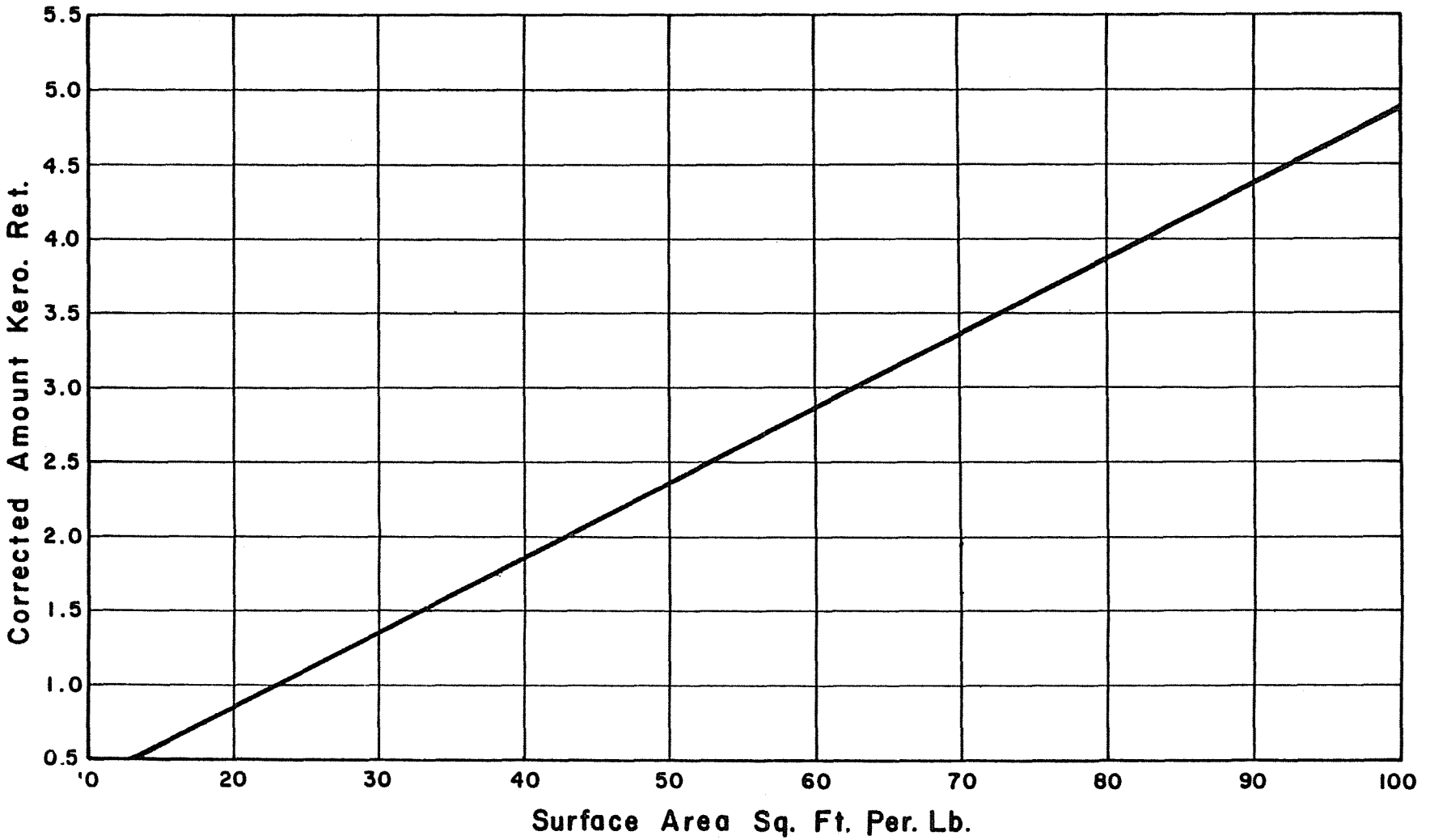

FIGURE 3

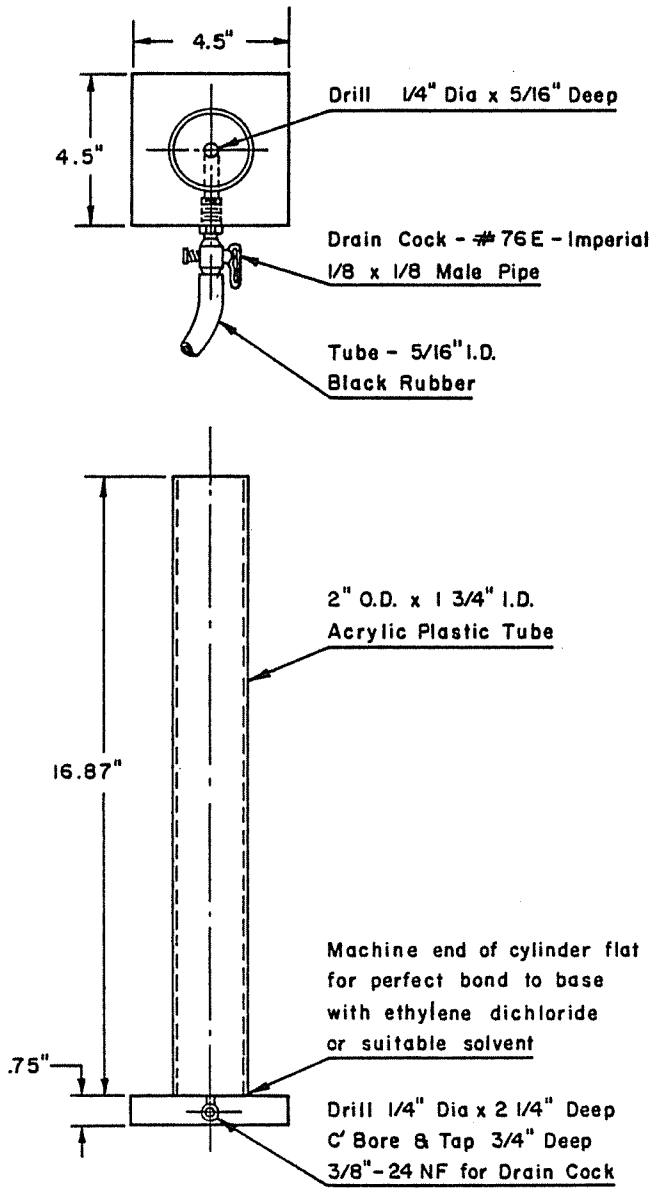

NOTE: CYLINDER & BASE TO BE OF MOULDED TRANSPARENT ACRYLIC PLASTIC

500 ML CYLINDER

FIGURE 4

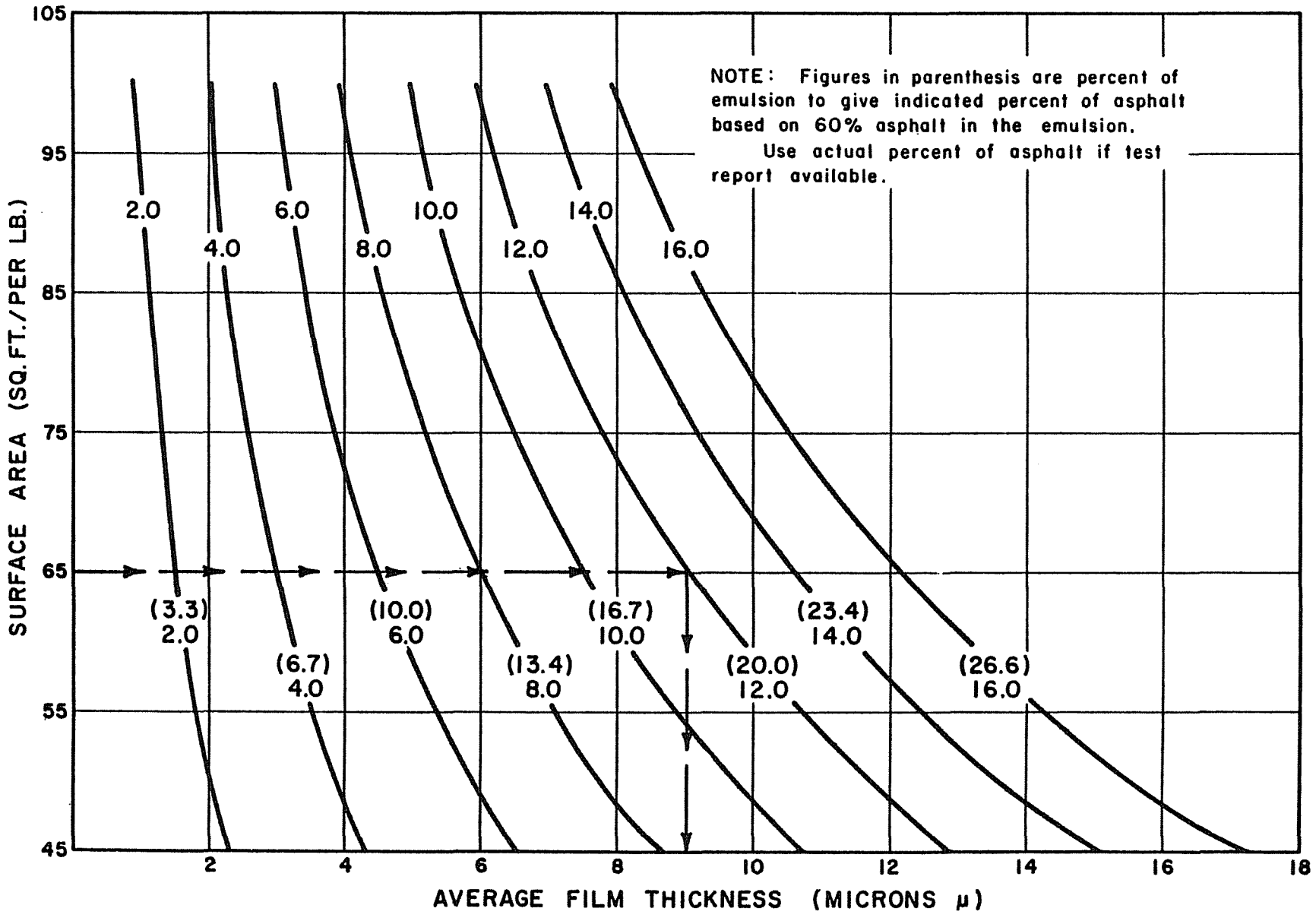
NOTE: Figures in parenthesis are percent of emulsion to give indicated percent of asphalt based on 60% asphalt in the emulsion.
Use actual percent of asphalt if test report available.
2.0
4.0
6.0
8.0
10.0
12.0
14.0
16.0
(3.3) 2.0
(6.7) 4.0
(10.0) 6.0
(13.4) 8.0
(16.7) 10.0
(20.0) 12.0
(23.4) 14.0
(26.6) 16.0
SURFACE AREA (SQ. FT./PER LB.)
105
95
85
75
65
55
45
2
4
6
8
10
12
14
16
18
AVERAGE FILM THICKNESS (MICRONS μ)

FIGURE 5

DESIGN OF ASPHALTIC CONCRETE FRICTION COURSE
(An Arizona Method)

Scope

1. This test method provides a means of determining the design bitumen content and the density of an asphalt concrete friction course.

Apparatus

2. The apparatus shall consist of the following:

(a) Oven - An oven capable of maintaining temperatures between 230° F. and 325° F.

(b) Testing Machine - 25,000 lb. capacity minimum, and capable of a head speed of 0.2 inches per minute.

(c) Molds - Molding cylinders, and top and bottom molding plungers; the cylinders shall be 4.000 ± 0.005 inches inside diameter by 6 inches in height. The top and bottom plungers shall be 3.990 ± 0.005 inches in diameter, the bottom plunger shall be approximately 2 inches in height and the top plunger shall be approximately 6 inches in height. A baseplate approximately 8" x 8" shall be provided to hold mold and plunger assembly.

NOTE: *Molding cylinders shall be marked with tare wt. to nearest 0.1 gram and inside diameter which has been determined to the nearest 0.001 inches.*

(d) Support Bars - Steel bars one inch square to raise mold cylinder during molding operation.

(e) Balance - A balance with a capacity of 5000 grams and a sensitivity of 1 gram.

(f) Miscellaneous spoons, spatulas, scoops, pans, etc.

Mineral Aggregate Requirements

3. The mineral aggregate for asphaltic concrete friction course shall be tested for compliance to the project requirements for:

(a) Gradation (ARIZ 201).

NOTE: *The mineral aggregate shall meet specified composite requirements.*

(b) Plasticity Index (AASHTO T90).

(c) Crushed Faces (ARIZ 212).

(d) Abrasion (AASHTO T96).

(e) Limestone Content (ASTM D 3042).

NOTE: *The above tests may be added upon or deleted as required by the specifications of the project.*

Aggregate Specific Gravities and Absorption

4. (a) The specific gravities (Bulk Oven Dry Basis (O.D.), Saturated Surface Dry Basis (S.S.D.) and Apparent Basis (App.)) and absorption of the fine and coarse mineral aggregate shall be determined in accordance with ARIZ 211 and AASHTO T85 respectively.

(b) The O.D., S.S.D., and App. Combined specific gravities are calculated by the following:

$$\text{Combined Specific Gravity} = \frac{P_1 + P_2}{\frac{P_1}{G_1} + \frac{P_2}{G_2}}$$

Where: P_1, P_2 = weight percent of coarse aggregate (plus No. 4) and fine (Minus No. 4) aggregate, respectively.

G_1, G_2 = specific gravity of coarse and fine aggregate, respectively.

Example:

$$\text{Combined O.D. Specific Gravity} = \frac{54 + 46}{\frac{54}{2.541} + \frac{46}{2.519}} = 2.531$$

Combined Absorption =

$$\frac{\left(\text{Combined S.S.D. Sp. Gr.}\right) - \left(\text{Combined O.D. Sp. Gr.}\right)}{\text{(Combined O.D. Specific Gravity)}} \times 100$$

Example: (Combined S.S.D. = 2.580, Combined O.D. = 2.531)

$$\text{Combined Absorption} = \frac{2.580 - 2.531}{2.531} \times 100 = 1.94\%$$

Determination of CKE Factor for Coarse Aggregate

5. The K_c value shall be determined in accordance with ARIZ 805.

Bitumen Content Determination

6. (a) Bitumen content will be determined as follows:

$$B = (1.5\ K_c + 3.5)\ \frac{2.650}{G_{ag}}$$

Where: B = bitumen content expressed as a percent of the total mix.

K_c = factor for coarse material from ARIZ 805.

G_{ag} = Combined O.D. specific gravity of the aggregate as determined in Section 4 of this procedure.

Preparation of Bulk Density Specimens

7. (a) Three samples of aggregate shall be prepared in the grading determined, each weighing 950 grams. The aggregate samples shall be heated to constant weight at the temperature required for the asphalt being used as shown in paragraph (b).

(b) The temperature of the asphalt at the time the mixing begins shall be in accordance with the following:

Grade	Temperature Range Degree F.	(Degree C.)
AR-2000	250 (121)	275 (135)
AC-20, AR-4000	275 (135)	300 (149)
AC-30	300 (149)	325 (163)
AC-40, AR-8000	300 (149)	325 (163)

(c) Place a large mixing bowl which has been heated to 230° F. on the balance and tare, transfer the heated aggregates to the bowl and add a small amount of -#4 "blend" material to bring weight to 950 grams.

(d) Pour the required amount of asphalt, as determined in Section 6, on the aggregate.

(e) Hand mix thoroughly with a heated spoon.

(f) Place the mixed sample into a 230° ± 5° F. oven until a constant temperature is attained (approximately one hour). Also place a mold and bottom plunger for each mixture into oven and heat to 230° ± 5° F.

(g) Remove bottom plunger and mold cylinder from oven, place mold assembly on baseplate (bottom plunger in place with mold cylinder supported on the two steel bars). Place paraffin coated disc on bottom plunger to prevent material from adhering to plunger. Place all of the mixture into molding cylinder and spade mixture vigorously with heated spatula or similar flat object, 15 times around the edge of the mold and 10 times at random into the mixture, penetrating mixture to the bottom of the mold. The top of the mixture should be slightly rounded to aid in firm seating of the upper plunger.

(h) Place a paraffin coated disc and then the upper plunger (which has been preheated) on the sample and compress the mixture under an initial load of 150 psi, to set it against the sides of the mold. Remove the support bars and permit full double-plunger action. Apply the load to the mixture at a rate of 0.2 inch per minute until a load of 2000 psi is reached. Hold the load at 2000 psi for 2 minutes.

(i) After compaction the top plunger is removed along with the paraffin disc leaving the bottom plunger in place to support specimen until cool as specified in paragraph (k).

(j) Repeat the procedure as described in paragraphs (c) through (i) above, for the other two samples.

(k) Allow specimens to cool in the mold with bottom plunger in place until they can be handled easily with the bare hand.

NOTE: *Cooling may be achieved by the use of 77° F. air bath, or if more rapid cooling is desired fans may be used.*

Bulk Density Determination

8. (a) After the specimens have cooled, remove the bottom plunger and paraffin disc and determine the weight of each mold with specimen to the nearest 0.1 gram. The weight of each specimen is calculated by subtracting the tare weight of the corresponding mold cylinder.

(b) While the specimens are still in the molds, the heights of the three specimens are determined to the nearest 0.001 inch.

(c) The inside diameters of the three molds used are determined and recorded to the nearest 0.001 inch.

(d) The bulk density is determined for each specimen by the following:

$$BD = \frac{W}{\left(\frac{d}{2}\right)^2 (h)\ (51.49)} \times 62.3$$

Where:

BD = Bulk Density of the specimen, expressed in pounds per cubic foot

W = Weight of specimen, grams

h = Height of specimen, inches

d = Inside diameter of mold, inches

(e) The average bulk density of the three specimens is then determined and recorded.

(f) Extrude specimens from molds and clean apparatus.

Example and Report

9. An example of the calculations is shown in Figure 1. The composite grading of the aggregate, results for specific gravity/absorption, K_c determination, calculations for the asphalt content and the results of the average bulk density determination shall be reported on the Bituminous Mixture Design Laboratory Card as shown in Figure 2.

Mold #	Tare Wt.	Inside Dia.	$(d/2)^2$
1	3694.8	4.001	4.002
2	3709.1	3.999	3.998
3	3702.6	4.003	4.006

Equation for Bulk Density:

$$BD = \frac{\text{Wt. of Spec.}}{\left(\frac{d}{2}\right)^2 \left(\text{Ht. of Spec.}\right)(51.49)} \times 62.3$$

Date	Lab No.	% Asph.	Mold/ Spec. No.	Inside Dia. of Mold	Height of Spec.	Wt. of Spec. & Mold	Wt. of Mold	Wt. of Spec.	Bulk Density lbs/cu.ft.	Avg. Bulk Density lbs/cu.ft.	Int.
12/25/88	88-9999	5.7	1	4.001	2.469	4682.9	3694.8	988.1	121.0	121.4	J.T.
			2	3.999	2.470	4703.5	3709.1	994.4	121.8		
			3	4.003	2.462	4693.0	3702.6	990.4	121.5		

FIGURE 1

† 44-2901 R7/81

☐ INITIAL ☐ FINAL ☐

MATERIALS SECTION
LABORATORY BITUMINOUS MIXTURE DESIGN

Pit No. Dixon & Vixon Gravel
Blend
Asphalt Source Artic Refinery

Received 12-13-88	Test Commenced 12-13-88	Material MA-ACFC	
Identification	Sampled 12-10-88	Lab. No. 88-9999	
Submitted by	Sampled by CLAUS	Project No M-222-333	
Source of Sample STOCKPILES		Quantity	
Location of Supply Dixon and Vixon Gravel			
Project Name North Pole Lane - Elf Drive		Contractor Ice Cap Paving	
Specifications Governing		Mix Design Request No.	

MATERIALS SURVEY (PE) PRELIMINARY DESIGN GRADING							AS PRODUCED (CONSTRUCTION) FINAL ADJUSTED DESIGN GRADING				
	ORIG. PIT AVERAGE		CRUSHED GRADATION		ADJ. CRUSH GRADATION		AS CRUSHED ON PROJECT COMPOSITE		AS ADJ. IN LABORATORY COMPOSITE		SPEC. LIMITS
Sieve	% Ret	% Pass	% Ret	% Pass	% Ret	% Pass	%		Coarse 85 %		
3" Slot							%		Fine 15 %		
3"							%		%		
2½"							%		%		
2"							%		%		
1½"							% Ret	% Pass	% Ret	% Pass	
1"											
¾"											
½"											
⅜"									0	100	100
¼"									26	74	
No. 4									28	46	30-60
8									36	10	7-15
10									2	8	
16									2	6	
30									1	5	
40									0	5	
50									1	4	
100									1	3	
200									0	2.6	0-4.0

O.D. SP. GR. COARSE	2.541	O.D. SP. GR. FINE	2.519	O.D. SP. GR. COMB.	2.531
S.S.D. SP. GR. COARSE	2.584	S.S.D. SP. GR. FINE	2.575	S.S.D. SP. GR. COMB.	2.580
APP. SP. GR. COARSE	2.655	APP. SP. GR. FINE	2.667	APP. SP. GR. COMB.	2.661
ABSORP. COARSE AGGR.	1.70 %	ABSORP. FINE AGGR.	2.21 %	ABSORP. COMB. AGGR	1.94 %

	LIQUID LIMIT	PLASTIC LIMIT	PLASTICITY INDEX	SAND EQUIV.
NATURAL FINES				
CRUSHED FINES			NP	
COMBINED FINES				

ABRASION (A, B, C, D): 100 REV. 4 % LOSS 500 REV. 19 % LOSS CRUSH.FACES 92 % LIMESTONE 0.13 %

REMARKS

$B = (1.5\ K_c + 3.5)\ 2.650/G_{AG} = (1.5 \times 1.3 + 3.5)\ 2.650/2.531 =$
$= 5.7\%$

BD = 121.4 lbs./cu. ft.

DESIGN DATA
(SEE BACK FOR CHARTS)

SPECIMEN	A	B	C	D	E	F	DESIGN SPEC
BIT.GRADE/SPECIFIC. GRAVITY	AC 20						
% OF BIT.	5.7						
BULK DENSITY LBS. PER CU. FT.	121.4						
MARSHALL STABILITY							
FLOW							
HVEEM STABILITY							
COHESION							
% AIR VOIDS							
% V.M.A.							
% AIR VOIDS FILLED							
% EFFECT ASPHALT TOTAL MIX							

SAMPLE	AIR PSI	H_2O PSI	RETENTION	ARIZ 802 MINIMUM RETENTION % / H_2O PSI MINIMUM 150
No. 1			%	% ASPHALT
No. 2			%	%
No. 3			%	%
No. 4			%	%
No. 5			%	%
No. 6			%	%

MAX. DENSITY LBS. PER CU. FT @ % ARIZ 806 (RICE TEST)
ASPHALT ABSORP. ON DRY AGGREGATE %
AGG. SURFACE AREA- SQ.FT./LB. FILM THICKNESS MICRONS
C.K.E. VALUES - ARIZ 805 F = F(CORR.)= C = 3.1 C(CORR)= 3.0
Kf = Kc = 1.3 Km =
BIT GRADE RECOMMENDED BITUMEN %
RECOMMENDED BITUMEN CONTENT CONSIDERING ALL TEST DATA 5.7 %

MIX DESIGN GRADATION TARGET VALUES

Sieve	% Pass
1"	100
¾"	
½"	
⅜"	
No. 4	
8	
40	
200	

FIGURE 2

MARSHALL MIX DESIGN METHOD FOR ASPHALTIC CONCRETE
(A Modification of AASHTO T 245 and ASTM D 1559)

Scope

1. This method is used to design asphaltic concrete mixes using Marshall apparatus. With some modifications this procedure may be used in designing other types of asphaltic concrete, such as recycled asphaltic concrete or emulsion mixes. It is not applicable to open graded mixtures such as Asphaltic Concrete Friction Course. (For ACFC Design see ARIZ Test Method 814).

Apparatus

2. The apparatus necessary includes all items required to perform the individual test methods referred to in this procedure.

Materials

3. (a) Mineral Aggregate - The mineral aggregate for the asphaltic concrete shall be produced material from the source(s) for the project. The mineral aggregate shall be tested for compliance to the project requirements for:

1) Gradation (ARIZ 201)

NOTE: The mineral aggregate shall meet specified composite gradation requirements when combined using desired percentages of the different produced materials. (See Section 4 for information regarding compositing samples.)

2) Sand Equivalent (AASHTO T 176)

3) Crushed Faces (ARIZ 212)

4) Abrasion (AASHTO T 96)

NOTE: The above tests may be added to or deleted as required by the specifications of the project.

NOTE: When the mix design is to be used for producing asphaltic concrete from a "batch plant" both bin material and stockpile material shall be used in developing the mix design as described in Sections 4 and 6.

(b) Bituminous Material - The asphalt used in the design shall be the asphalt which is to be used in the production of the asphaltic concrete. The specific gravity of the bituminous material shall be determined in accordance with AASHTO T 228.

(c) Mineral Admixtures - Any mineral admixtures which are required to achieve the requirements of the specified "Mix Design Criteria". This shall be the same type of material to be used on the project. Mineral admixtures shall conform to the requirements as set forth in the project specifications.

Determination of Composite Gradation

4. The composite gradation of the mineral aggregate is determined using desired percentages. When mineral admixture is used, the composite of mineral aggregate and mineral admixture is also determined. When mix designs are performed using bin material a composite of the bin material is performed using the desired percentages, along with a composite of the stockpile material which feeds the bins at the desired percentages. For designs developed using both bin material and stockpile material the composite gradation of the bin material is used for the design aggregate gradation.

NOTE: The sieve analysis for the aggregate from each individual stockpile or bin shall be determined in accordance with ARIZ 201. The Pass No. 4 fraction of each aggregate shall then be screened into No. 8 and Pass No. 8 sizes, and the weights for each recorded. The proportion of the Pass No. 4 fraction which passes the No. 8 sieve is determined by dividing the weight of Pass No. 8 material by the total weight of the No. 8 and Pass No. 8 material. This value is multiplied by the Pass No. 4 from the sieve analysis to determine the actual Pass No. 8, which is recorded to the nearest whole percent. This value is compared to the Pass No. 8 value from sieve analysis to provide a check on the representativeness of the fine sieve analysis. If the difference between the two Pass No. 8 values is greater than 4 the fine sieve analysis shall be adjusted by multiplying the percent pass for each sieve smaller than No. 8 by a factor obtained by dividing the actual Pass No.8 by the Pass No. 8 from sieve analysis.

(a) The compositing of aggregate materials is performed as described in ARIZ 205, "Composite Grading", with the following exceptions: (An example of a composite done for mix design is given in Figure 1, which shows the procedure outlined below.)

1) The Pass No 8 fraction is calculated for each type of aggregate by multiplying the % Pass No. 8 from the sieve analysis for the material by the "% of composite" that the type of aggregate represents and the total of each of the Pass No. 8 fractions is recorded as the "Composite of Pass No. 8 from Gradation of Each Stockpile or Bin".

2) The "Composite of Pass No. 8 From Gradation of Each Stockpile or Bin" is rounded to the whole % and recorded as the composite % Pass No 8. sieve.

3) Adjust fractions of material passing the No. 8 sieve for each type of aggregate as necessary to correspond to the value for each calculated % Pass No. 8.

4) After summing the % retained for each size fraction and rounding to the whole percent, any adjustments are made to the composite so that the calculated value for Pass No. 8 is not changed.

NOTE: If desired, the composite of aggregate materials may be adjusted using the method of "artificially grading" as shown in ARIZ 244.

(b) When mineral admixture is included in the mix the aggregate composite and gradation is adjusted to indicate the composite using the desired % mineral admixture "by weight of the aggregate". An example of the calculations is given in Figure 1.

1) The aggregate "% of composite" for each aggregate stockpile or bin is adjusted by the following:

$$\left[\begin{array}{c}\text{Adjusted}\\ \text{Aggregate}\\ \text{"\% of Composite"}\end{array}\right] = \frac{\text{Aggregate "\% of Composite"}}{100 + (\text{\% mineral admixture})} \times 100$$

Example (for coarse aggregate and 2% mineral admixture):

$$\left[\begin{array}{c}\text{Adjusted}\\ \text{Aggregate \% of}\\ \text{Composite}\end{array}\right] = \frac{26}{100 + 2} \times 100 = 25.49\% = 25\%$$

2) The percentage of mineral admixture in the adjusted composite is determined:

$$\left[\begin{array}{c}\text{Adjusted}\\ \text{\% Mineral}\\ \text{Admixture}\end{array}\right] = \frac{\text{\% mineral admixture}}{100 + (\text{\% of mineral admixture})} \times 100$$

Example (For 2% mineral admixture):

$$\text{Adjusted \% mineral admixture} = \frac{2}{100 + 2} \times 100 = 1.96\% = 2\%$$

3) The aggregate gradation (for % passing) is adjusted for mineral admixture by performing the following calculation for each sieve:

$$\left[\begin{array}{c}\text{Adjusted}\\ \text{\% Pass}\\ \text{Each Sieve}\end{array}\right] = \frac{\left[\begin{array}{c}\text{\% Pass}\\ \text{From Aggregate}\\ \text{Composite}\end{array}\right] + \left[\begin{array}{c}\text{\% Mineral}\\ \text{Admixture}\end{array}\right]}{100 + (\text{\% of mineral admixture})} \times 100$$

Example (For No. 16 sieve):

$$\text{Adjusted \% Pass} = \frac{36 + 2}{100 + 2} \times 100 = 37.25\% = 37\%$$

4) The % retained on each sieve is determined:

$$\left[\begin{array}{c}\text{\% Retained}\\ \text{on}\\ \text{Each Sieve}\end{array}\right] = \left[\begin{array}{c}\text{\% passing}\\ \text{next larger}\\ \text{sieve size}\end{array}\right] - \left[\begin{array}{c}\text{\% passing}\\ \text{desired}\\ \text{sieve size}\end{array}\right]$$

Example (For 1/4" sieve):

% retained = 78% - 67% = 11%

(c) The composited gradation of the aggregate (and composite of aggregate and mineral admixture when used) is shown on the design card, along with the percentage of each material.

Preparing Samples for Mix Designs Using Stockpile Material

5. The samples necessary in the design are prepared and weighed up for testing utilizing the stockpile composite information.

(a) Representative samples, for each size fraction in the composite, are obtained for the tests necessary in the design. The size fractions which shall be utilized are individual sizes from each stockpile for material of No. 8 sieve size and larger, and minus No. 8 material from each stockpile. A weigh up sheet is shown in Figure 2, which gives an example illustrating the use of the composite information and the material sizes required.

NOTE: If the composite was accomplished using the "artificial grading" method, the preparation of samples will be as directed in ARIZ 244.

(b) The aggregate sample sizes, number of samples required for design tests, and other pertinent information in preparing the samples are given in Section 7.

Preparing Samples for Mix Designs Using Bin Material

6. When bin material is used for the mix design the samples are prepared and weighed up for testing as outlined below.

(a) The stockpile composite gradation shall be adjusted to the desired gradation of the bin composite. This is accomplished as outlined in ARIZ 244.

(b) Representative samples of bin material, for each size fraction in the bin composite, are obtained for performing the Marshall Stability/Flow and Density tests. Size fractions to be used are individual sizes from each bin for material of No. 8 sieve size and larger, and Pass No. 8 material from each bin.

(c) Representative samples of stockpile material, using the adjusted composite information obtained from "artificially grading" in ARIZ 244, are obtained for performing all other required tests (Sand Equivalent, Crushed Faces, Abrasion, Fine and Coarse Aggregate Specific Gravity/Absorption, Rice Test, and

Immersion Compression Test). The size fractions to be used are individual sizes from each stockpile for material of No. 8 sieve size and larger; and for the Pass No. 8 material, the amount of each size fraction for Pass No. 8 to Retained No. 40, Pass No. 40 to Retained No. 200, and Pass No. 200. An illustration of the use of the above size fractions is shown in Figure 4 of ARIZ 244.

(d) The aggregate sample sizes, number of samples required for design tests, and other pertinent information in preparing the samples are given in Section 7.

Aggregate Sample Sizes

7. (a) The following table gives the aggregate samples sizes and the number of samples required for each test. The aggregate weight shown below for Maximum Theoretical Specific Gravity will provide 3 test samples, the amount shown for Density-Stability/Flow will produce 3 Marshall specimens and the weight for Immersion Compression will produce 2 specimens.

Test	Aggregate Sample Size	Number of Samples
Fine Aggregate Specific Gravity/ Absorption	1200 grams	1
Coarse Aggregate Specific Gravity/Absorption	*	1
Maximum Theoretical Specific Gravity (Rice Test)	3000 grams	1
Density-Stability/Flow	**3300 grams	***
Immersion Compression	**3400 grams	3

* Minimum weight of the test sample is determined by nominal maximum size of the aggregate, in accordance with AASHTO T 85.

** Generally the weight shown will provide specimens of acceptable heights, but adjustments may be necessary in some cases. If the combined specific gravity of the coarse and fine mineral aggregate is known, the following equation will normally provide specimens within the specified criteria:

$$\left[\text{Adjusted Weight of Aggregate}\right] = \frac{\left[\text{Combined Bulk O.D. Agg. Specific Gravity}\right]}{2.650} \times \left[\text{Approx. Sample Size Shown (3300 grams for Density-Stability/Flow and 3400 grams for Immersion Compression)}\right]$$

*** 1 Sample for each asphalt content desired to be tested.

NOTE: When mineral admixture is used, the proper amount is added to the composited aggregate samples for Density-Stability/Flow and Immersion Compression specimens only. The mineral admixture and aggregate shall be thoroughly mixed together.

Aggregate Specific Gravities and Absorption

8. (a) The Bulk Oven Dry, S.S.D., Apparent specific gravities and absorption of the fine and coarse mineral aggregate shall be determined in accordance with ARIZ 211 and AASHTO T 85 respectively.

NOTE: When different sources of fine mineral aggregate are to be used in the production of asphaltic concrete the specific gravity and absorption of each individual fine material shall be determined and recorded and the combined specific gravity and absorption calculated as specified in ARIZ 211. This allows for the combining of fine aggregates in varying amounts without having to composite a sample of the different sources and testing the combined materials. If "artificial grading" has been performed, the fine aggregate specific gravity and absorption shall be determined on a sample of the combined material from the different sources.

(b) The combined Bulk Oven Dry, S.S.D., Apparent specific gravities and combined absorption for the coarse and fine mineral aggregate are calculated by the following:

$$\left[\begin{array}{c}\text{Combined}\\ \text{Specific}\\ \text{Gravity}\end{array}\right] = \frac{100}{\dfrac{Pc}{Gc} + \dfrac{Pf}{Gf}}$$

Where: Pc and Pf = weight percent of coarse aggregate (Plus No. 4) and fine aggregate (Minus No. 4) respectively. (Note the Pc and Pf are for aggregate material only. If mineral admixture is being used in the design, Pc and Pf shall be determined for composite of mineral aggregate only, not for the aggregate and mineral admixture composite.)

Gc and Gf = specific gravity of coarse and fine aggregate respectively.

Example (For combined S.S.D. specific gravity):

$$\left[\begin{array}{c}\text{Combined}\\ \text{S.S.D.}\\ \text{Specific Gravity}\end{array}\right] = \frac{100}{\dfrac{41}{2.597} + \dfrac{59}{2.626}} = 2.614$$

$$\text{Combined Absorption} = \frac{\left[\begin{array}{c}\text{Combined S.S.D.}\\ \text{Specific Gravity}\end{array}\right] - \left[\begin{array}{c}\text{Combined Bulk O.D.}\\ \text{Specific Gravity}\end{array}\right]}{\text{(Combined Bulk O.D. Specific Gravity)}} \times 100$$

Example: (Combined S.S.D. Sp. Gr. = 2.614, Combined Bulk O.D. Sp. Gr. = 2.576)

$$\text{Combined Absorption} = \frac{2.614 - 2.576}{2.576} \times 100 = 1.48\%$$

Preparation of Specimens for Density and Stability/Flow Determination

9. Specimens shall be prepared as follows, using apparatus shown in AASHTO T 245.

NOTE: Paragraph 2.4 of AASHTO T 245 shall be changed to read: "Compaction pedestal - The compaction pedestal shall consist of an 8" by 8" by 18" wooden post capped with a 12" by 12" by 1" steel plate. The steel cap shall be firmly fastened to the post. The wooden post shall have a dry weight of 42 to 48 lbs./cu. ft. and shall rest squarely on a solid concrete slab and shall be secured by four angle brackets to the concrete slab. The pedestal assembly shall be installed so that the post is plumb and the cap is level."

NOTE: If a mechanical hammer is utilized to compact specimens, generally results which are within 0.5 lbs./cu. ft. of hand hammer results are considered acceptable.

(a) The temperature of the asphalt and aggregate at the time mixing begins shall be in accordance with the following:

Asphalt Grade	Temperature
AC 20	300 ± 10 F.
AC 30, AC 40	305 ± 10 F.

(b) The aggregate (and mineral admixture when used) shall be dried to constant weight at the temperature required as shown in paragraph 6 (a). Bring samples to desired weight by adding a small amount of proportioned Pass No. 8 make up material.

NOTE: Normally a range of 1% asphalt, or 3 different asphalt contents at 0.5% increments will provide sufficient information, although in some cases it may be necessary to prepare additional sets of samples at other asphalt contents.

(c) The aggregate (and mineral admixture when used) and asphalt shall be mechanically mixed for 90 to 120 seconds in a commercial dough mixer with a minimum 10 quart capacity and equipped with a wire whip and then hand mixed as necessary to ensure thorough coating.

NOTE: Before each batch is mixed, the mixing bowl and whip shall be at approximately the temperature specified in paragraph 6 (a).

(d) Each mixed sample shall be placed on a tarp or sheet of heavy paper and in a rolling motion thoroughly mixed. The material shall be spread into a circular mass 1 1/2 to 2 inches thick. The circular mass shall be cut into 6 equal segments, taking opposite segments for each individual sample.

(e) Each sample shall be placed in a pan and allowed to cure for 2 hours ± 10 minutes at approximately 285 F. A mold assembly (baseplate, mold and collar) shall be heated to approximately 285 F. The face of the compaction hammer shall be thoroughly cleaned and heated on hot plate set at approximately 285 F.

(f) Place a 4" paper disc in the bottom of the mold before the mixture is introduced. Place the entire batch in the mold with a heated spoon. Spade the mixture vigorously with a heated flat metal spatula, with a blade approximately 1" wide and 6" long and stiff enough to penetrate the entire layer of material, 15 times around the perimeter and 10 times at random into the mixture, penetrating the mixture to the bottom of the mold. Smooth the surface of mix to a slightly rounded shape.

(g) Before compaction the mixture shall be at the proper temperature as shown below for the grade of asphalt being used.

Asphalt Grade	Temperature
AC 20	280 ± 10 F.
AC 30, AC 40	285 ± 10 F.

NOTE: To maintain compaction temperature the mixture and mold may be returned to the oven before compaction.

(h) Place paper disc on top of material, place the mold assembly on the compaction pedestal in the mold holder, and apply 75 blows with the compaction hammer. Remove the base plate and collar, and reverse and reassemble the mold. Apply the same number of compaction blows to the face of the reversed specimen.

NOTE: The compaction hammer shall apply only one blow after each fall, that is, there shall not be a rebound impact.

(i) Remove collar, baseplate, paper discs and allow specimen to cool.

NOTE: Cooling may be accomplished at room temperature, in a 77 F. air bath, or if more rapid cooling is desired the mold and specimen may be placed in front of a fan until cool.

(j) Extrude the specimen from the mold.

NOTE: Care shall be taken in extruding the specimen from the mold, so as not to develop tensile stresses in the specimen.

(k) Measure the height of the specimen to the nearest 0.001 inch.

NOTE: Compacted specimens shall be 2.50 ± 0.20 inches in height. If this criteria is not met for the specimens at each asphalt content the entire set of specimens at that asphalt content shall be discarded and a new set prepared after necessary adjustments in the aggregate weight have been made.

(l) Follow the procedure in paragraphs (f) through (k) for all specimens required.

Specific Gravity/Bulk Density of Specimens

10. (a) Determine the specific gravity of the three specimens at each asphalt content in accordance with ARIZ 415, Method A. The determination of the "Weight in Water" and "S.S.D. Weight" of each specimen will be completed before the next specimen is submerged for its "Weight in Water" determination.

NOTE: Specimens are assumed to be at constant weight after extrusion from the molds.

(b) Determine the density in lbs./cu. ft., by multiplying the specific gravity of each specimen by 62.3 lbs./cu. ft.

NOTE: For each asphalt content the densities shall not differ by more than 2.0 lbs./cu. ft. If this density requirement is not met the entire set of specimens at that asphalt content shall be discarded and a new set of specimens prepared.

Stability and Flow Determination

11. The stability and flow of each specimen shall be determined as follows:

(a) Bring the specimens to 140 ± 1.8 F. by immersing in water bath 30 to 40 minutes. The specimens shall be supported on a plate (a 5" x 5" glass plate is ideal) during the immersion period and while removing from the bath. Thoroughly clean the guide rods and the inside of the test heads prior to running the test, and lubricate the guide rods so that the upper test head slides freely over them. The testing head temperature shall be maintained between 70 and 100 F., using a water bath when required. Remove the specimen from the water bath, quickly towel dry the specimen and place it in the lower segment of the breaking head. Place the upper segment of the breaking head on the specimen, and place the complete assembly in position on the testing machine.

(b) Place the flowmeter in position over one of the guide rods and adjust the flowmeter to zero while holding the sleeve firmly against the upper segment of the breaking head. Hold the flowmeter sleeve firmly against the upper segment of the breaking head while the test load is being applied.

NOTE: In lieu of adjusting the flowmeter to zero, the beginning reading may be subtracted from the ending reading to determine the flow.

(c) Apply the load to the specimen by means of the constant rate of the load jack or testing machine head of 2 inches per minute until the maximum load is reached and the load decreases as indicated by the proving ring micrometer dial. Record the maximum micrometer dial reading and also the flow reading the instant the maximum load is determined. The elasped time for the test from removal of the test specimen from the water bath to maximum load determination shall not exceed 30 seconds.

NOTE: The maximum load is defined as the last point in the load/time curve before the load decreases.

(d) The micrometer dial reading shall be converted to load in pounds (stability) using the calibration chart provided for the proving ring, or a formula derived from the calibration chart.

NOTE: Some testing machines, which are operated in a different manner than described in paragraphs (b) through (d), are capable of providing a direct stability/flow reading. When utilizing this type of apparatus, refer to the operation manual for the equipment to determine readings for stability and flow.

(e) Record the stability of each specimen to the nearest pound and the flow to the nearest 0.01 inch.

(f) Correct the stability obtained for each specimen for the height of the specimen by the following table:

STABILITY CORRELATION RATIOS*

Height of Specimen (Inches)	Correlation Ratio
2.300 - 2.306	1.15
2.307 - 2.319	1.14
2.320 - 2.332	1.13
2.333 - 2.344	1.12
2.345 - 2.357	1.11
2.358 - 2.369	1.10
2.370 - 2.381	1.09
2.382 - 2.393	1.08
2.394 - 2.405	1.07
2.406 - 2.417	1.06
2.418 - 2.430	1.05
2.431 - 2.445	1.04
2.446 - 2.461	1.03
2.462 - 2.477	1.02
2.478 - 2.492	1.01
2.493 - 2.507	1.00
2.508 - 2.522	0.99
2.523 - 2.537	0.98
2.538 - 2.553	0.97
2.554 - 2.573	0.96
2.574 - 2.594	0.95
2.595 - 2.615	0.94
2.616 - 2.634	0.93
2.635 - 2.649	0.92
2.650 - 2.663	0.91
2.664 - 2.679	0.90
2.680 - 2.697	0.89
2.698 - 2.700	0.88

* The measured stability of a specimen multiplied by the ratio for the height of the specimen equals the corrected stability for a 2-1/2 inch specimen.

(g) Determine and record the average values for stability and flow for each asphalt content.

NOTE: An example of the recorded results for density determination, stability/flow, and the corrected stability values is shown in Figure 3.

(h) Compare resultant stability and flow values with the mix design criteria or governing specification requirements and determine if acceptable results have been obtained, if the design should be discarded, or if additional specimens at other asphalt contents should be prepared and tested for density, stability and flow.

Maximum Theoretical Specific Gravity (Rice Test)

12. The maximum specific gravity of the mixture shall be determined in accordance with ARIZ 806. Values obtained from the Rice Test are utilized in the Voids Relationships calculations to determine the "asphalt lost by absorption into aggregate expressed as the % by weight of the dry aggregate".

Determination of Design Asphalt Content

13. The design asphalt content is determined as follows in paragraphs (a) through (e).

(a) For each asphalt content used, determine values for voids relationships required by the specifications in accordance with the "Method for Determining Void Relationships in Asphaltic Paving Mixtures" (Figures 4 through 7).

NOTE: The calculations for determining the voids relationships include the necessary equations when mineral admixtures are used. An example of the calculations with mineral admixture, are given in Figures 8 and 9.

(b) If a range of asphalt contents have been tested, the calculated specific gravity shall be determined for desired asphalt contents by interpolating between the values obtained for the specific gravity in Section 8.

(c) Using the interpolated specific gravities, determine the bulk density and voids relationships at each corresponding asphalt content.

(d) The design asphalt content shall be the asphalt content which meets all specified requirements, and provides air voids as close to the middle of the range given in the specified Mix Design Criteria as possible.

NOTE: If it is not possible to obtain acceptable results within the range of asphalt contents used, a determination must be made as to either discarding the design or preparing additional specimens at other asphalt contents for density, stability/flow testing and voids relationships analysis.

(e) Interpolate the value for Stability and Flow at the selected design asphalt content. Check these values against the design criteria for acceptability.

NOTE: If the average stability and/or flow of tested specimens for an asphalt percent used in the interpolation of the design asphalt content is outside the specification limits, a set of 3 specimens shall be prepared at the selected design asphalt content and tested for Bulk Density and Stability/Flow, along with the determination of voids relationships. The resultant values are then checked for compliance to specified requirements.

(f) Calculate the maximum theoretical density for the design asphalt content by the equation below. This value is recorded on the design card as shown in Figure 10.

$$\text{Maximum Density} = \frac{\text{Bulk Density}}{100 - \%\ \text{Air Voids}} \times 100$$

Immersion Compression Test

14. Using the design asphalt content, perform the Immersion Compression test in accordance with ARIZ 802.

Mix Design Gradation Target Values

15. The desired target values for the aggregate (and mineral admixture when used) in the bituminous mixture shall be from the composited gradation and shall be expressed as percent passing particular sieve sizes as required by the specifications for the project.

NOTE: The target values for aggregate (and also aggregate with mineral admixture, when used) are shown on the design card. The gradation of samples taken for specification compliance are compared to the applicable target values, (e.g., a mix design requires mineral admixture and the mineral admixture is blended with the asphalt. The sample for specification compliance will be aggregate only and therefore is compared to the target values given without cement).

Report and Example

16. Report the test results and data obtained along with the "Recommended Bitumen Content Considering All Test Data" on the Laboratory Bituminous Mixture Design card, as shown in the example in Figure 10. Liberal use of the remarks area to clarify and/or emphasize any element of the design is recommended.

DATE 8-15-85 PROJECT NO. F-099-9(11) LAB. NO. 85-999B DESIGN 1/2" AC

Sieve Size	Aggregate "% of composite"					% Ret.	% Ret. Rounded	% Pass	Design Specs.
		999 C 26%	998 I 12%	997 F 47%	996 B 15%				
1"									
3/4"								100	100
1/2"		4.4				4.4	4	96	90-100
3/8"		~~16.4~~ 16.3	1.4			17.7	18	78	70-85
1/4"		4.4	~~6.6~~ 6.7	0.9	0.2	12.2	12	66	
#4		0.3	3.2	3.3	0	6.8	7	59	
#8		0.3	0.5	10.8	1.2	12.8	13	46	43-51
#10		0	0	2.4	0.8	3.2	3	43	
#16		0	0	4.7	2.7	7.4	7	36	
#30		0	0	~~6.6~~ 6.5	~~4.4~~ 4.3	10.8	11	25	
#40		0	0	3.8	2.1	5.9	6	19	12-22
#50		0	0	3.3	1.6	4.9	5	14	
#100		0	0	4.7	1.4	6.1	6	8	
#200		~~0~~ 0.1	0	2.8	0.3	3.2	3	4.6	2.0-6.0
Pass #200		0.18	0.24	3.81	0.40	4.63	4.6		

MIX DESIGN CRITERIA REQUIREMENTS:

IMC RET. ~ 50%
MIN. WET STRENGTH ~ 150
VOIDS ~ 5.0 - 7.0
V.M.A. ~ 15.5 - 18.5
MIN. STABILITY ~ 2000
FLOW ~ 8 - 16

COMPOSITE OF PASS NO. 8 FROM GRADATION OF EACH STOCKPILE OR BIN:

LAB #	-#8
999	0.3
998	0.2
997	32.0
996	13.6
TOTAL =	46.1

Sieve Size	Adjusted "% of composite" for use of mineral admixture						Calc. % Pass	% Ret.	% Pass	Design Specs.
		C 25%	I 12%	F 46%	B 15%	T-II 2%				
1"	=	=	=	=	=	=				
3/4"									100	100
1/2"							96.08	4	96	90-100
3/8"							78.43	18	78	70-85
1/4"							66.67	11	67	
#4							59.80	7	60	
#8							47.06	13	47	44-52
#10							44.12	3	44	
#16							37.25	7	37	
#30							26.46	11	26	
#40							20.59	5	21	13-23
#50							15.69	5	16	
#100							9.80	6	10	
#200							6.47	4	6.5	3.0-7.5

Adjusted "% of composite" = 25.49 Adjusted "% of composite" = 11.76 Adjusted "% of composite" = 46.08 Adjusted "% of composite" = 14.71 Adjusted % Mineral Admix. = 1.96

REMARKS

FIGURE 1

44-9361 10/83

ASPHALTIC CONCRETE MIX DESIGN WEIGH UP CARD

MATERIAL 1/2" AC LAB NO. 85-999B DATE 8-15-85

PROJECT NO. F-099-9(11) PROJECT NAME CHRISTMAS CANYON - CLAUS T.I.

CONTRACTOR REINDEER CONTRACTING MIX DESIGN REQUEST #2

LAB NO.	SIZE	ACCUM % RET.	1 RICE	3 STABS	3 IMC	1 COARSE SP. GR.	1 COARSE SAND EQUIV.	1 CRUSH. FACES	COARSE C.K.E.	LIME-STONE	FLAKI-NESS INDEX	1 ABRASION "B"	1 BLEND SP. GR.	1 FINE SAND EQUIV.	1 FINE SP. GR.	1 - #8 MAKE-UP MAT'L	SIZE	LAB NO.
999	1/2	4.4	132	141	145	321	45	24				2500						
	3/8	20.7	621	664	684	1511	211	115				4802						
	1/4	25.1	753	805	830	1832	256	140				–						
	#4	25.4	762	815	839	1854	259	~~141~~				–						
998	3/8	26.8	804	860	886	1956	273	149				5000						
	1/4	33.5	1005	1075	1107	2445	341	186										
	#4	36.7	1101	1177	1213	2679	374	204										
997	1/4	37.6	1128	1206	1243	2745	383	209										
	#4	40.9	1227	1312	1352	2985	417	228										
996	1/4	41.1	1233	1318	1358	3000	~~419~~	~~229~~										
999	#8	41.4	1242	1328	1368			230					–	3	8	–	#8	999
998	#8	41.9	1257	1344	1385			233					–	8	22	–	#8	998
997	#8	52.7	1581	1691	1742			293					–	118	316	–	#8	997
996	#8	53.9	1617	1729	1781			300					97	130	–	–	#8	996
999	-#8	54.2	1626	1739	1791								–	133	324	4	-#8	999
998	-#8	54.4	1632	1745	1798								–	135	329	7	-#8	998
997	-#8	86.4	2592	2772	2856								–	461	1200	423	-#8	997
996	-#8	100	3000	3208	3305								1200	600		600	-#8	996
2% TYPE II		CEMENT –		3272	3371													

ADJUSTED AGG. WEIGHT FOR STABS. = (2.576 / 2.650) x 3300 = 3208

ADJUSTED AGG. WEIGHT FOR IMC'S = (2.576 / 2.650) x 3400 = 3305

REMARKS:

FIGURE 2

LAB # 85-999B PROJ. # F-099-9(11) DATE 8-16-85 SP. GR. = AIR / SSD-H20 DENSITY= (SP.GR.)X(62.3)

% ASPH.	ADMIXTURE	PLUG #	HVEEM/ MARSHALL	SSD WT.	H20 WT.	AIR WT.	SPECIFIC GRAVITY	DENSITY #/FT3	PLUG HEIGHT	STABILITY	CORR. RATIO	CORR. STABILITY	FLOW
4.5	2% Type II	1	M	1135.5	637.6	1131.2	2.272	141.5	2.540	4020	0.97	3899	11
		2		1136.9	638.1	1126.7	2.259	140.7	2.583	3810	0.95	3620	11
		3		1139.4	641.5	1134.3	2.278	141.9	2.555	4520	0.96	4339	12

AVG. SP. GR. & CALC. DENS. 2.270 141.4 AVG. STAB. & FLOW 3953 11

DENS. RANGE 1.2

% ASPH.	ADMIXTURE	PLUG #	HVEEM/ MARSHALL	SSD WT.	H20 WT.	AIR WT.	SPECIFIC GRAVITY	DENSITY #/FT3	PLUG HEIGHT	STABILITY	CORR. RATIO	CORR. STABILITY	FLOW
5.0	2% Type II	4	M	1137.8	645.9	1136.4	2.310	143.9	2.511	4710	0.99	4663	13
		5		1145.1	645.7	1143.6	2.290	142.7	2.558	4090	0.96	3926	12
		6		1149.0	645.8	1147.9	2.281	142.1	2.568	3820	0.96	3667	11

AVG. SP. GR. & CALC. DENS. 2.294 142.9 AVG. STAB. & FLOW 4085 12

DENS. RANGE 1.8

% ASPH.	ADMIXTURE	PLUG #	HVEEM/ MARSHALL	SSD WT.	H20 WT.	AIR WT.	SPECIFIC GRAVITY	DENSITY #/FT3	PLUG HEIGHT	STABILITY	CORR. RATIO	CORR. STABILITY	FLOW
5.5	2% Type II	7	M	1161.1	657.7	1159.8	2.304	143.5	2.536	4140	0.98	4057	11
		8		1151.2	655.6	1147.9	2.316	144.3	2.516	4480	0.99	4435	12
		9		1146.9	655.2	1145.2	2.329	145.1	2.512	4880	0.99	4831	12

AVG. SP. GR. & CALC. DENS. 2.316 144.3 AVG. STAB. & FLOW 4441 12

CHECKED BY FD DENS. RANGE 1.6

FIGURE 3

Oven dry bulk specific gravity of coarse aggregate by AASHTO T 85 and fine aggregate by ARIZ 211

Coarse Aggregate (Gc)

$$\frac{\text{(Weight of oven dry sample in air (A))}}{\text{(Weight of S.S.D. sample in air (B))} - \text{(Weight of saturated sample in water (C))}}$$

Fine Aggregate (Gf)

$$\frac{\text{(Oven dry weight of 500 g. S.S.D. sample (A))}}{\text{(Weight of flask filled with water (B))} + \text{(500 grams = weight of S.S.D. sample)} - \text{(Weight of flask + 500 g. S.S.D. sample + water to fill (C))}}$$

Combined Bulk O.D. specific gravity of aggregate

Gsb

$$\frac{(100)}{\dfrac{\text{(\% coarse aggregate (Pc))}}{\text{(Bulk O.D. specific gravity of coarse aggregate (Gc))}} + \dfrac{\text{(\% fine aggregate (Pf))}}{\text{(Bulk O.D. specific gravity of fine aggregate (Gf))}}}$$

Measured maximum specific gravity of bituminous mixture by ARIZ 806

$$\text{Volume of voidless mix (Vvm)} = \text{(Weight of mix sample (Wmm)*)} + \text{(Weight of flask filled with water (B))} - \text{(Weight of flask with mix sample, filled with water after evacuation of air (C))}$$

* If aggregate has absorbed water, the surface dry weight (Wsd) shall replace (Wmm) in the above equation.

$$\text{Maximum specific gravity of bituminous mixture (Gmm)} = \frac{\text{(Weight of mix sample (Wmm))}}{\text{(Volume of voidless mix (Vvm))}}$$

FIGURE 4

Effective specific gravity of aggregate

Gse

$$\frac{\left(\text{Weight of aggregate in mix sample (Wmm x \% aggregate x 0.01)}\right)}{\left(\text{Volume of voidless mix (Vvm)}\right) - \left[\dfrac{\left(\text{Weight of asphalt in mix sample (Wmm x \% asphalt x 0.01)}\right)}{\left(\text{Specific gravity of asphalt (Gb)}\right)}\right]}$$

Asphalt lost by absorption into aggregate expressed as % by weight of dry aggregate

Pba

$$\left[\frac{\left(\text{Effective specific gravity of aggregate (Gse)}\right) - \left(\text{Combined bulk O.D. specific gravity of aggregate (Gsb)}\right)}{\left(\text{Effective specific gravity of aggregate (Gse)}\right) \times \left(\text{Combined bulk O.D. specific gravity of aggregate (Gsb)}\right)}\right] \times \left(\text{Specific Gravity of asphalt (Gb)}\right) \times (100)$$

Average Measured Bulk Specific Gravity of specimens by AASHTO T 166

Gmb

$$\frac{\left(\text{Weight of specimen in air (A)}\right)}{\left(\text{Weight of surface dry specimen in air (B)}\right) - \left(\text{Weight of specimen in water (C)}\right)}$$

Note: The following equations provide the volume relationships for mixes with or without mineral admixtures.

% Mineral Aggregate in mix

Pma

$$\frac{\left((100) - \text{\% asphalt in mix (Pb)}\right)}{1.00 + \left[(0.01) \times \left(\text{\% mineral admixture by weight of aggregate (Pad)}\right)\right]}$$

% Mineral Admixture in Mix

Pmx

$$\left(100 - \text{\% asphalt in mix (Pb)}\right) - \left(\text{\% aggregate in mix (Pma)}\right)$$

FIGURE 5

Volume of Aggregate Vag	$\dfrac{(\text{\% aggregate in mix (Pma)}) \times (\text{Average Measured Bulk specific gravity of specimens (Gmb)})}{(\text{Combined Bulk O.D. specific gravity of aggregate (Gsb)})}$
Volume of Mineral Admixture Vmx	$\dfrac{(\text{\% mineral admixture in mix (Pmx)}) \times (\text{Average Measured Bulk specific gravity of specimens (Gmb)})}{(\text{Specific Gravity of Mineral Admixture (Gad)})}$
Effective asphalt content, % of total mix Pbe	$(\text{\% asphalt in mix (Pb)}) - \left[(\text{Asphalt lost by absorption into aggregate expressed as \% by weight of dry aggregate (Pba)}) \times (\text{\% aggregate in mix (Pma)}) \times (0.01)\right]$
Volume of Effective Asphalt Vbe	$\dfrac{(\text{Effective Asphalt Content, \% of Total mix (Pbe)}) \times (\text{Average Measured Bulk Specific Gravity of Specimens (Gmb)})}{(\text{Specific Gravity of Asphalt (Gb)})}$

FIGURE 6

% Voids in Mineral Aggregate VMA	$(100) - \left(\text{Volume of Aggregate (Vag)}\right) - \left(\text{Volume of Mineral Admixture (Vmx)}\right)$

Note: If a mineral admixture is used, VMA is the voids in the combination of mineral aggregate and mineral admixture, as indicated by the above equation.

% Effective air voids EV	$\left(\text{Voids in mineral aggregate (VMA)}\right) - \left(\text{Volume of Effective Asphalt (Vbe)}\right)$
% of voids in mineral aggregate filled with asphalt VF	$\left[\dfrac{\left(\text{Volume of Effective Asphalt (Vbe)}\right)}{\left(\text{Voids in mineral aggregate (VMA)}\right)}\right] \times (100)$

FIGURE 7

I. Calculation of Combined Aggregate Bulk O.D. Specific Gravity:

$$Gsb = \frac{100}{\frac{Pc}{Gc} + \frac{Pf}{Gf}} = \frac{100}{\frac{(41)}{(2.558)} + \frac{(59)}{(2.589)}} = 2.576$$

II. Data obtained from Rice Test:

Vvm = 442.5

Gmm = 2.392 ; Gmm x 62.3 = (2.392) x 62.3 = 149.0 lb./cu. ft.

$$Gse = \frac{(Wmm \times \% \text{ aggregate} \times 0.01)}{Vvm - \left[\frac{(Wmm \times \% \text{ asphalt} \times 0.01)}{Gb}\right]} = \frac{(1058.4) \times (94.0) \times (0.01)}{(442.5) - \left[\frac{(1058.4) \times (6.0) \times (0.01)}{(1.023)}\right]} = 2.615$$

$$Pba = \frac{Gse - Gsb}{Gse \times Gsb} \times Gb \times 100 = \frac{(2.615) - (2.576)}{(2.615) \times (2.576)} \times (1.023) \times 100 = 0.59\ \%$$

III. Recorded Average Measured Bulk Specific Gravity of Specimen at each asphalt content tested:

Gmb @ Pb = 4.5 %: (2.270); Gmb x 62.3 = (2.270) x 62.3 = 141.4 lb./cu. ft.

Gmb @ Pb = 5.0 %: (2.294); Gmb x 62.3 = (2.294) x 62.3 = 142.9 lb./cu. ft.

Gmb @ Pb = 5.5 %: (2.316); Gmb x 62.3 = (2.316) x 62.3 = 144.3 lb./cu. ft.

IV. MINERAL ADMIXTURE SPECIFIC GRAVITIES:

TYPE II CEMENT = 3.14
TYPE IP CEMENT = 3.00
LIME = 2.20

V. Calculations of Voids Relationships

Pb = 4.5%

$$Pma = \frac{(100 - Pb)}{1.00 + (0.01 \times Pad)} = \frac{(100) - (4.5)}{1.00 + [(0.01) \times (2.0)]} = 93.63$$

$$Pmx = (100 - Pb) - Pma = [100 - (4.5)] - (93.63) = 1.87$$

$$Vag = \frac{Pma \times Gmb}{Gsb} = \frac{(93.63) \times (2.270)}{(2.576)} = 82.51$$

$$Vmx = \frac{Pmx \times Gmb}{Gad} = \frac{(1.87) \times (2.270)}{(3.14)} = 1.35$$

$$Pbe = Pb - (Pba \times Pma \times 0.01) = (4.5) - [(0.59) \times (93.63) \times (0.01)] = 3.95$$

$$Vbe = \frac{Pbe \times Gmb}{Gb} = \frac{(3.95) \times (2.270)}{(1.023)} = 8.76$$

$$VMA = 100 - Vag - Vmx = 100 - (82.51) - (1.35) = 16.14$$

$$EV = VMA - Vbe = (16.14) - (8.76) = 7.38$$

$$VF = \frac{Vbe}{VMA} \times 100 = \frac{(8.76)}{(16.14)} \times 100 = 54.28$$

FIGURE 8

$$Pma = \frac{(100 - Pb)}{1.00 + (0.01 \times Pad)} \qquad Pmx = (100 - Pb) - Pma \qquad Vag = \frac{Pma \times Gmb}{Gsb}$$

$$Vmx = \frac{Pmx \times Gmb}{Gad} \qquad Pbe = Pb - (Pba \times Pma \times 0.01) \qquad Vbe = \frac{Pbe \times Gmb}{Gb}$$

$$VMA = 100 - Vag - Vmx \qquad EV = VMA - Vbe \qquad VF = \frac{Vbe}{VMA} \times 100$$

Pb = 5.0 %

$$Pma = \frac{(100) - (5.0)}{1.00 + [(0.01) \times (2.0)]} = 93.14 \qquad Pmx = [100 - (5.0)] - (93.14) = 1.86$$

$$Vag = \frac{(93.14) \times (2.294)}{(2.576)} = 82.94 \qquad Vmx = \frac{(1.86) \times (2.294)}{(3.14)} = 1.36$$

$$Pbe = (5.0) - [(0.59) \times (93.14) \times (0.01)] = 4.45 \qquad Vbe = \frac{(4.45) \times (2.294)}{(1.023)} = 9.98$$

$$VMA = 100 - (82.94) - (1.36) = 15.70 \quad EV = (15.70) - (9.98) = 5.72 \quad VF = \frac{(9.98)}{(15.70)} \times 100 = 63.57$$

Pb = 5.5 %

$$Pma = \frac{(100) - (5.5)}{1.00 + [(0.01) \times (2.0)]} = 92.65 \qquad Pmx = [100 - (5.5)] - (92.65) = 1.85$$

$$Vag = \frac{(92.65) \times (2.316)}{(2.576)} = 83.30 \qquad Vmx = \frac{(1.85) \times (2.316)}{(3.14)} = 1.36$$

$$Pbe = (5.5) - [(0.59) \times (92.65) \times (0.01)] = 4.95 \qquad Vbe = \frac{(4.95) \times (2.316)}{(1.023)} = 11.21$$

$$VMA = 100 - (83.30) - (1.36) = 15.34 \quad EV = (15.34) - (11.21) = 4.13 \quad VF = \frac{(11.21)}{(15.34)} \times 100 = 73.08$$

Pb = 4.6 %: Interpolated Gmb = 2.275 ; Gmb x 62.3 = (2.275) x 62.3 = 141.7 lb./cu. ft.

$$Pma = \frac{(100) - (4.6)}{1.00 + [(0.01) \times (2.0)]} = 93.53 \qquad Pmx = [100 - (4.6)] - (93.53) = 1.87$$

$$Vag = \frac{(93.53) \times (2.275)}{(2.576)} = 82.60 \qquad Vmx = \frac{(1.87) \times (2.275)}{(3.14)} = 1.35$$

$$Pbe = (4.6) - [(0.59) \times (93.53) \times (0.01)] = 4.05 \qquad Vbe = \frac{(4.05) \times (2.275)}{(1.023)} = 9.01$$

$$VMA = 100 - (82.60) - (1.35) = 16.05 \quad EV = (16.05) - (9.01) = 7.04 \quad VF = \frac{(9.01)}{(16.05)} \times 100 = 56.14$$

Pb = 4.7 %: Interpolated Gmb = 2.280 ; Gmb x 62.3 = (2.280) x 62.3 = 142.0 lb./cu. ft.

$$Pma = \frac{(100) - (4.7)}{1.00 + [(0.01) \times (2.0)]} = 93.43 \qquad Pmx = [100 - (4.7)] - (93.43) = 1.87$$

$$Vag = \frac{(93.43) \times (2.280)}{(2.576)} = 82.69 \qquad Vmx = \frac{(1.87) \times (2.280)}{(3.14)} = 1.36$$

$$Pbe = (4.7) - [(0.59) \times (93.43) \times (0.01)] = 4.15 \qquad Vbe = \frac{(4.15) \times (2.280)}{(1.023)} = 9.25$$

$$VMA = 100 - (82.69) - (1.36) = 15.95 \quad EV = (15.95) - (9.25) = 6.70 \quad VF = \frac{(9.25)}{(15.95)} \times 100 = 57.99$$

FIGURE 9

†●44-2901 R7/81

☐ INITIAL ☐ FINAL ☐

MATERIALS SECTION
LABORATORY BITUMINOUS MIXTURE DESIGN

Pit No. NORTH POLE S & R
Blend CANDY CANE WASH
Asphalt Source NORTH SLOPE

Received	8-13-85	Test Commenced	8-13-85	Material	1/2" AC
Identification		Sampled	8-12-85	Lab. No.	85-999 B
Submitted by		Sampled by	ELVES	Project No	F-099-9(11)
Source of Sample	STOCKPILES			Quantity	
Location of Supply	NORTH POLE SAND AND ROCK / CANDY CANE WASH				
Project Name	CHRISTMAS CANYON - CLAUS T.I.			Contractor	REINDEER CONTRACTING
Specifications Governing				Mix Design Request No.	2

MATERIALS SURVEY (PE) PRELIMINARY DESIGN GRADING

Sieve	ORIG. PIT AVERAGE % Ret	ORIG. PIT AVERAGE % Pass	CRUSHED GRADATION % Ret	CRUSHED GRADATION % Pass	ADJ. CRUSH GRADATION % Ret	ADJ. CRUSH GRADATION % Pass	~~AS PRODUCED (CONSTRUCTION)~~ ~~FINAL ADJUSTED DESIGN GRADING~~ ~~AS CRUSHED ON PROJECT~~ COMPOSITE % Ret	% Pass	~~AS ADJ. IN LABORATORY~~ COMPOSITE % Ret	% Pass	SPEC. LIMITS
							COARSE 26%		COARSE 25%		
3" Slot							INTER 12 %		INTER 12 %		
3"							FINE 47 %		FINE 46 %		
2½"							BLEND 15 %		BLEND 15 %		
2"							%		CEMENT 2 %		
1½"											
1"											
¾"								100		100	100
½"							4	96	4	96	90-100
⅜"							18	78	18	78	70-85
¼"							12	66	11	67	
No. 4							7	59	7	60	
8							13	46	13	47	44-52
10							3	43	3	44	
16							7	36	7	37	
30							11	25	11	26	
40							6	19	5	21	13-23
50							5	14	5	16	
100							6	8	6	10	
200							3	4.6	4	6.5	3.0-7.5

O.D. SP. GR. COARSE	2.558	O.D. SP. GR. FINE	2.589	O.D. SP. GR. COMB.	2.576
S.S.D. SP. GR. COARSE	2.597	S.S.D. SP. GR. FINE	2.626	S.S.D. SP. GR. COMB.	2.614
APP. SP. GR. COARSE	2.661	APP. SP. GR. FINE	2.688	APP. SP. GR. COMB.	2.677
ABSORP. COARSE AGGR.	1.51 %	ABSORP. FINE AGGR.	1.43 %	ABSORP. COMB. AGGR	1.48 %

	LIQUID LIMIT	PLASTIC LIMIT	PLASTICITY INDEX	SAND EQUIV.
NATURAL FINES				
CRUSHED FINES				
COMBINED FINES				67

ABRASION (A, (B), C, D): 100 REV. 4 % LOSS 500 REV. 18 % LOSS CRUSH.FACES 94 % LIMESTONE %

REMARKS THIS DESIGN REQUIRES THE USE OF 2% TYPE II CEMENT, BY WEIGHT OF AGGREGATE.

O.D. FINE SPECIFIC GRAVITY - NORTH POLE S & R = 2.576
O.D. FINE SPECIFIC GRAVITY - CANDY CANE WASH = 2.629

DESIGN DATA
(SEE BACK FOR CHARTS)

SPECIMEN	A	B	C	D	E	F	DESIGN SPEC.
BIT.GRADE/SPECIFIC. GRAVITY	AC 40 - 1.023						
% OF BIT.	4.5	4.6	5.0	5.5			
BULK DENSITY LBS. PER CU. FT.	141.4	141.7	142.9	144.3			
MARSHALL STABILITY	3953		4338	4441			2000 MIN.
FLOW	11		12	12			8-16
HVEEM STABILITY							
COHESION							
% AIR VOIDS	7.4	7.0	5.7	4.1			5.0-7.0
% V.M.A.	16.1	16.0	15.7	15.3			15.5-18.5
% AIR VOIDS FILLED	54.3	56.1	63.6	73.1			
% EFFECT ASPHALT TOTAL MIX	3.95	4.05	4.45	4.95			

SAMPLE	AIR PSI	H_2O PSI	RETENTION
No. 1			%
No. 2	854	539	63 %
No. 3			%
No. 4			%
No. 5			%
No. 6			%

ARIZ 802 MINIMUM RETENTION 50 %
H_2O PSI MINIMUM 150

4.6 % AC 40 ASPHALT
2.0 % TYPE II CEMENT
%
%
%
%
%

MAX. DENSITY 152.4 LBS. PER CU. FT @ 4.6 % ~~ARIZ 806 (RICE TEST)~~

ASPHALT ABSORP. ON DRY AGGREGATE 0.59 %

AGG. SURFACE AREA= SQ.FT./LB. FILM THICKNESS MICRONS

C.K.E. VALUES - ARIZ 805 F = F(CORR.)= C = C(CORR)=

Kf = Kc = Km =

BIT GRADE RECOMMENDED BITUMEN %

RECOMMENDED BITUMEN CONTENT CONSIDERING ALL TEST DATA 4.6 %

MIX DESIGN GRADATION TARGET VALUES

Sieve	% Pass w/o CEMENT	% Pass w/ CEMENT
1"	100	100
¾"	100	100
½"	96	96
⅜"	78	78
No. 4	–	–
8	46	47
40	19	21
200	4.6	6.5

FIGURE 10

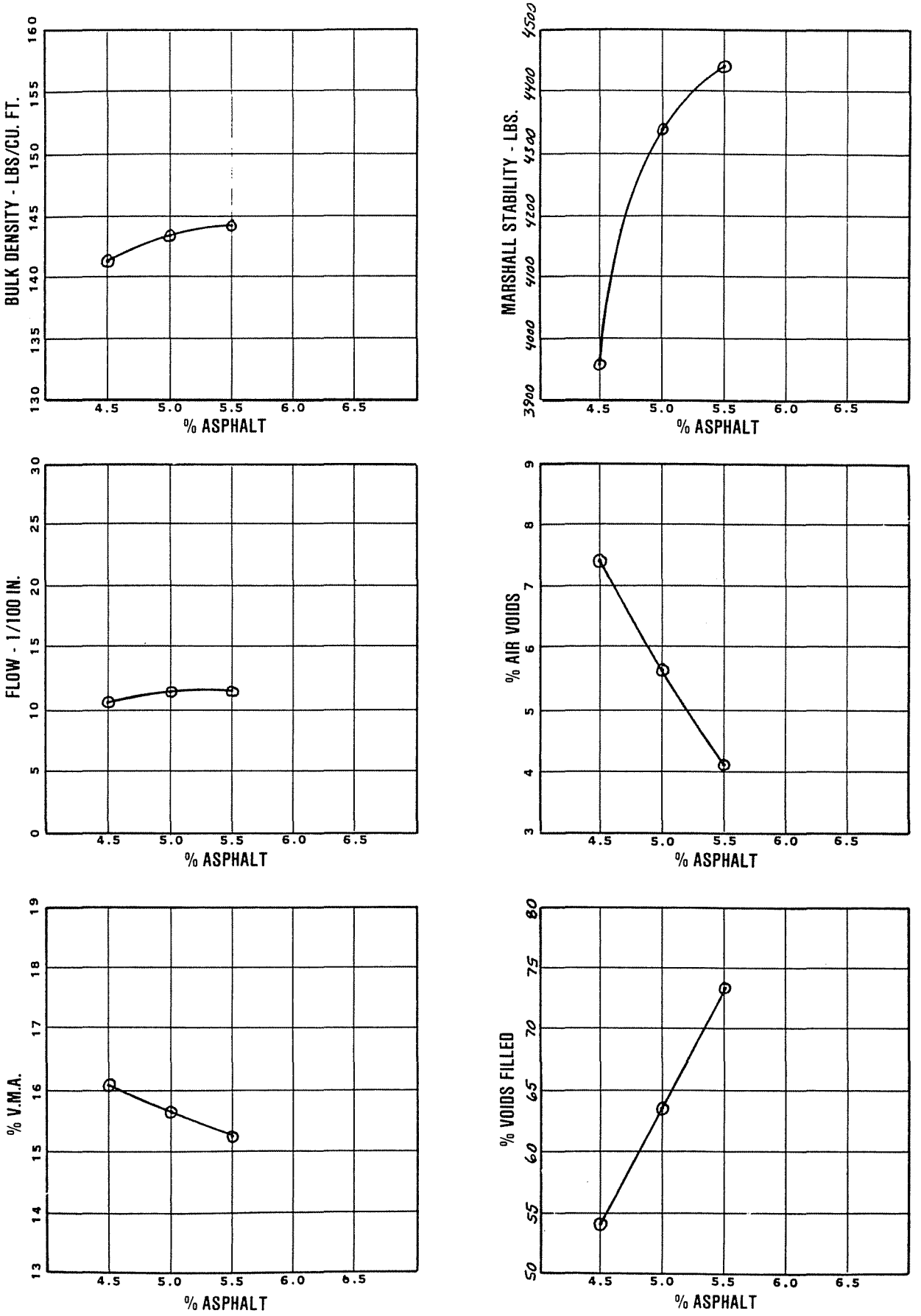
BULK DENSITY - LBS./CU. FT.
130
135
140
145
150
155
160
4.5
5.0
5.5
6.0
6.5
% ASPHALT
MARSHALL STABILITY - LBS.
3900
4000
4100
4200
4300
4400
4500
4.5
5.0
5.5
6.0
6.5
% ASPHALT
FLOW - 1/100 IN.
0
5
10
15
20
25
30
4.5
5.0
5.5
6.0
6.5
% ASPHALT
% AIR VOIDS
3
4
5
6
7
8
9
4.5
5.0
5.5
6.0
6.5
% ASPHALT
% V.M.A.
13
14
15
16
17
18
19
4.5
5.0
5.5
6.0
6.5
% ASPHALT
% VOIDS FILLED
50
55
60
65
70
75
80
4.5
5.0
5.5
6.0
6.5
% ASPHALT

FIGURE 11

DESIGN OF EXPOSED AGGREGATE SEAL COATS

(An Arizona Method)

SCOPE

1. (a) This method describes the procedure for calculating design quantities of materials for exposed aggregate seal coats utilizing cover aggregates and emulsified asphalt. The resultant quantities are to be adjusted for field conditions, as necessary.

(b) See Appendix A1 of the Materials Testing Manual for information regarding the procedure to be used for rounding numbers to the required degree of accuracy.

(c) Metric (SI) units and values are shown in this test method with English units and values following in parentheses. Values given for metric and English units may be numerically equivalent (soft converted) for the associated units, or they may be given as rounded or rationalized values (hard converted). Either the metric or English units along with their corresponding values shall be used in accordance with applicable specifications. See Appendix A2 of the Materials Testing Manual for additional information on the metric system.

DATA

2. The following values are to be determined by the method indicated:

H = Average least dimension of cover aggregate (Median Aggregate size modified for Flakiness Index - Arizona Test Method 233).

G = Bulk Specific Gravity (Arizona Test Method 210 - Saturated surface dry basis).

R = Residual bitumen of emulsified asphalt, expressed as a decimal (AASHTO T 59).

T = Traffic factor from the following:

When the ADT is less than or equal to 2000,
T = 0.85 - [0.0001(ADT)]

When the ADT is more than 2000, T = 0.65

NOTE: Traffic must be considered by lanes - for instance on a divided highway, the passing lane and distress lanes should have a higher traffic factor than the travel lane.

E = Wastage factor due to cover aggregate lost to whip off by traffic and to variation in spread (1 + Estimated Waste, for example, 1.05 for 5% wastage).

V = Voids in Aggregate by the following:

Metric:

$$V = 1 - \frac{W_L}{(998)\,(G)}$$

Where: W_L = Loose unit weight of aggregate in kg/m^3 by AASHTO T 19 (Shoveling Procedure).

English:

$$V = 1 - \frac{W_L}{(62.3)\,(G)}$$

Where: W_L = Loose unit weight of aggregate in lbs./cu. ft. by AASHTO T 19 (Shoveling Procedure).

S = Surface Texture Correction from below:

Surface Texture	Surface Texture Correction	
	liters/square meter	gals./sq. yd.
Very Porous	0.41	0.09
Rough and Porous	0.27	0.06
Slightly Rough, Black	0.14	0.03
Black and Smooth (Hard, no aggregate embedment predicted)	0.00	0.00
Soft and Rich (Aggregate embedment predicted)	-0.05* to -0.23*	-0.01* to -0.05*
	* Depending upon aggregate embedment estimation.	

CALCULATIONS

3. The required amount of cover material and bituminous material shall be calculated by the following:

(a) Cover Material Requirement:

Metric:

For 100% pass 9.5 mm sieve,

$$C = [0.6163\ (G)\ (H)\ (E)]\ (2 - V)$$

For 100 % pass 12.5 mm sieve,

$$C = [0.5078\ (G)\ (H)\ (E)]\ (2 - V)$$

Where: C = Cover Material in kg/m^2

Convert cover material from kg/m^2 to m^3/m^2 by the following equation:

$$\frac{C(\text{in } kg/m^2)}{W_L\ (\text{in } kg/m^3)} = C\ (\text{in } m^3/m^2)$$

English:

For 100% pass 3/8" sieve,

$$C = [28.4\ (G)\ (H)\ (E)]\ (2 - V)$$

For 100 % pass 1/2" sieve,

$$C = [23.4\ (G)\ (H)\ (E)]\ (2 - V)$$

Where: C = Cover Material in lbs./sq. yd

Convert cover material from lbs./sq. yd. to cubic yards per square yard by the following equation:

$$\frac{C\ (\text{in lbs./sq. yd.})}{[W_L\ (\text{in lbs./cu. ft.})] \times 27}$$

(b) Bituminous Material Requirement:

Metric:

$$B = \frac{0.3622\ (H)\ (T)}{R} + S$$

Where: B = Bituminous Material in L/m^2

English:

$$B = \frac{2\ (H)\ (T)}{R} + S$$

Where: B = Bituminous Material in gals./sq. yd.

EXAMPLE

4. The following example will serve to illustrate the calculations:

(a) Data:

H = 5.50 mm
G = 2.630
R = 0.65
T (for 1500 ADT) = 0.85 - [0.0001 (1500)] = 0.70
E = 1.06

$V = 0.46$ ($W_L = 1418$ kg/m^3)
S = Rough and Porous = 0.27 L/m^2

(b) Cover Material Requirement:

For 100% pass 12.5 mm sieve,

$$C = [0.5078\ (G)\ (H)\ (E)]\ (2 - V)$$
$$= [0.5078\ (2.630)\ (5.50)\ (1.06)]\ (2 - 0.46)$$
$$= 11.99\ \text{kg/m}^2$$

Convert 11.99 kg/m^2 to m^3/m^2 by:

$$\frac{11.99\ \text{kg/m}^2}{1418\ \text{kg/m}^3} = 0.008\ \text{m}^3/\text{m}^2$$

(c) Bituminous Material Requirement:

$$B = \frac{0.3622\ (H)\ (T)}{R} + S$$

$$= \frac{0.3622\ (5.50)\ (0.70)}{0.65} + 0.27$$

= 2.42 liters per square meter

REPORT

5. Report the following:

(a) The amount of cover material required, in kg/m^2 (lbs./sq. yd.), to the nearest 0.01 kg/m^2 (0.1 lbs./sq. yd.).

(b) The amount of cover material required, in m^3/m^2 (cubic yards per square yard), to the nearest 0.001 m^3/m^2 (0.001 cubic yards per square yard).

(c) The amount of bituminous material required, to the nearest 0.01 L/m^2 (0.01 gals./sq. yd.).

DETERMINATION OF ADDITIVE OR ASPHALT BLEND REQUIRED FOR MODIFICATION OF ASPHALT VISCOSITY

(An Arizona Method)

Scope

1. This procedure is applicable to the modification of asphalt viscosity by the use of additives or blending asphalts. Section 4 is used in the determination of additive quantities. Methods for determining emulsified additive quantities and also spread rate in gallons per square yard for spray applications are provided. Section 5 is used in the blending of asphalts.

Apparatus

2. The apparatus shall consist of the following:

(a) The apparatus as listed in AASHTO T 202 - "Absolute Viscosity of Asphalts".

(b) The apparatus as listed in AASHTO T 201 - "Kinematic Viscosity of Asphalts", when additives are used.

(c) The apparatus listed in either AASHTO T 227 - "Density, Specific Gravity or API Gravity of Crude Petroleum and Liquid Petroleum Products by Hydrometer Method" or AASHTO T 228 - "Specific Gravity of Semi-Solid Bituminous Materials" (refer to paragraph 4 (b)), when additives are used.

(d) The apparatus as listed in AASHTO T 59, Section 13 - "Testing Emulsified Asphalts (Residue by Evaporation)", shall be required when testing with emulsified additives.

Sample Preparation

3. (a) Samples of the materials to be used shall be obtained according to AASHTO T 40 - "Sampling Bituminous Materials".

(b) Sufficient amount of additive residue shall be obtained by ARIZ 504 - "Vacuum Recovery of Asphalt Emulsion Residue", when emulsified additives are used.

(c) In the case of modifying asphalt in existing bituminous mixtures, the asphalt shall be recovered from a sample of the mixture according to ARIZ 413 - "Extraction of Asphalt from Bituminous Mixtures by Soxhlet Extraction" and ARIZ 511 - "Recovery of Asphalt from Extraction Solution".

Procedure (For determination of additive quantities)

4. (a) When using emulsified additives, the percent residue shall be determined by use of AASHTO T 59. (Percent of residue may also be determined by heating 5 gram samples in accordance with ARIZ 512 - "Residue by Evaporation". In case of dispute AASHTO T 59 shall be used.

(b) The absolute viscosity of the asphalt to be modified is determined by AASHTO T 202. The kinematic viscosity, centistokes at 140° F., of the additive (residue if using emulsified additive) shall be determined by AASHTO T 201. The specific gravity shall be determined by AASHTO T 227 (for materials with maximum viscosity of 5000 centistokes) or AASHTO T 228 (for materials with viscosities above 5000 centistokes). The absolute viscosity of the additive (or residue), in poises, is then determined by multiplying the kinematic viscosity by the specific gravity and dividing by 100.

(c) By reference to the chart in Figure 1, the quantity of additive required to modify the viscosity to a desired level may be determined. The absolute viscosity of the asphalt to be modified is found on the left side of the chart. The viscosity of the additive is found on the right side of the chart. A line is drawn between the two points. The desired viscosity of the modified asphalt is found on the chart and by following a straightedge horizontally, the line will be intercepted. From this intercept a vertical line to the bottom of the chart will indicate the percent of additive required as a percentage of the total binder (by weight). An example is shown in Figure 1 for the following data:

1) Absolute viscosity of the asphalt to be modified = 34,000 poises.

2) An emulsified recycling agent has been selected to be used as the additive. It has been determined that the residue has an absolute viscosity of 5 poises. By AASHTO T 59 it has been determined that the emulsion has 63% residue.

3) By following the instruction above, the amount of additive required is determined to be 22% of the total binder (by weight), for a desired viscosity of 2000 poises.

(d) When emulsified additives are used, the amount of emulsion must be calculated so that the desired percent additive is achieved:

1) Calculate the amount of emulsified additive required, "A_e".

$$A_e = \frac{(100) \times (A_p)}{E_r\ (100 - A_p)} \times A_a$$

Where: A_a = amount of asphalt to be modified

A_p = percent additive required (From Figure 1.)

E_r = percent of residue in the emulsified additive

Example: (For A_a = 1200 tons, A_p = 22%, E_r = 63%)

$$A_e = \frac{(100) \times (22)}{63(100 - 22)} \times 1200 = 537.2 \text{ tons}$$

2) The percent emulsified additive as a percentage of the total binder (by weight), "P_e" may be calculated:

$$P_e = \frac{A_e}{A_e + A_a} \times 100$$

Example:

$$P_e = \frac{537.2}{537.2 + 1200} \times 100 = 30.9\%$$

(e) If an emulsified additive is to be applied by spraying a scarified and recompacted bituminous surface, the required amount of the additive may be calculated in gals./sq. yd. by the following:

1) Determine the density (lbs/cu. ft.) of the material to be scarified by AASHTO T 166 - "Bulk Specific Gravity of Compacted Bituminous Mixtures". (The specimens for testing shall be obtained by coring the existing pavement and then removing the top of core by sawing at the depth of scarification.)

2) Determine the percent asphalt in the portion of the existing pavement to be scarified by ARIZ 413 - "Extraction of Asphalt from Bituminous Mixtures by Soxhlet Extraction" or ARIZ 402 - "Bitumen Content of Bituminous Mixtures by Vacuum Extraction".

3) Determine the weight, in lbs., of bituminous mixture in one square yard of scarification, "W_m":

$$W_m = (D_m)\ (9)\ (D_s)$$

Where: D_m = Density of existing material (lbs./cu. ft.)

D_s = Depth of scarification (in decimal feet)

Example: (For D_m = 140 lbs./cu. ft., D_s = 3/4" = 0.0625')

$$W_m = (140)\ (9)\ (0.0625) = 78.75 \text{ lbs.}$$

4) Determine the weight of asphalt to be modified in scarified material (for one square yard), "A_a":

$$A_a = (W_m)\ (P_s)$$

Where: P_s = percent asphalt in existing material (expressed as a decimal)

Example: (For P_s = 5.5% = 0.055)

$$A_a = (78.75 \text{ lbs.})\ (0.055) = 4.33 \text{ lbs.}$$

5) Determine the weight of emulsified additive in lbs., "A_e", required to modify the asphalt in one square yard of scarified material:

$$A_e = \frac{(100) \times (A_p)}{E_r\ (100 - A_p)} \times A_a$$

Where: A_a = amount of asphalt to be modified

A_p = percent additive required (From Figure 1.)

E_r = percent of residue in the emulsified additive

Example: (For A_p = 22%, E_r = 63%)

$$A_e = \frac{(100) \times (22)}{63(100 - 22)} \times 4.33 = 1.939 \text{ lbs./sq.yd}$$

6) Determine the application rate in gals/sq. yd., "A_r".

$$A_r = \frac{A_e}{E_w}$$

Where: E_w = weight of emulsion, lbs. per gal.

Example: (For E_w = 8.33 lbs./gal.)

$$A_r = \frac{1.939 \text{ lbs/sq. yd.}}{8.33 \text{ lbs./gal.}} = 0.23 \text{ gals/sq.yd.}$$

NOTE: *When the additive is to be used on a heater scarified section of existing pavement, the quantity obtained by the above method necessarily assumes that all of the asphalt in the scarified section will be modified by the additive.*

Procedure (For Blending Asphalts)

5. (a) The absolute viscosities of the asphalt to be modified and the blend asphalt to be used are determined by AASHTO T 202.

(b) By reference to the chart in Figure 2, the above absolute viscosity of the asphalt to be modified is plotted on the left side of the chart. The absolute viscosity of the blend asphalt is plotted on the right side of the chart. A line is drawn which connects the two points. The desired viscosity of the modified asphalt is found on the chart. By following a straightedge horizontally, the line will be intercepted. From this intercept a vertical line to the bottom of the chart will indicate the percent of blend asphalt which is required as a percentage of the total binder (by weight). An example is shown in Figure 2 for the following data (The nomograph used in Figure 2 is the same as in Figure 1, but to illustrate the procedure for blending asphalts a separate chart is used.):

1) Absolute viscosity of the asphalt to be modified = 16,000 poises.

2) Absolute viscosity of the blend asphalt = 1,000 poises.

3) By following the instructions above, the amount of blend asphalt required is determined to be 44% of the total binder (by weight), for desired viscosity of 4,000 poises.

Precision

6. The use of this procedure will generally yield close approximations in achieving the desired modified viscosity. A trial mix should always be made to check the actual viscosity.

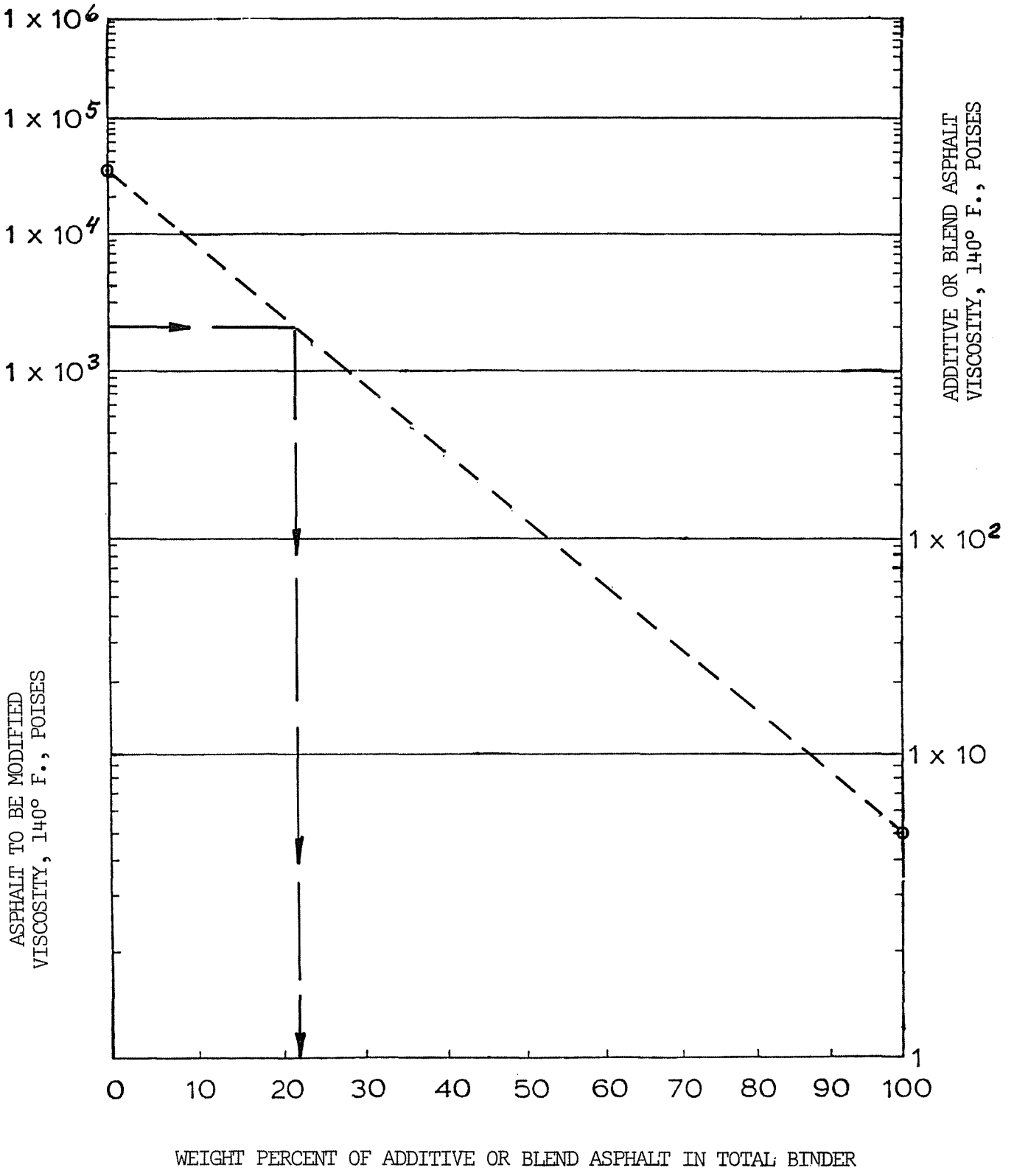
1 x 10^6
1 x 10^5
1 x 10^4
1 x 10^3
1 x 10^2
1 x 10
1
ADDITIVE OR BLEND ASPHALT VISCOSITY, 140° F., POISES
ASPHALT TO BE MODIFIED VISCOSITY, 140° F., POISES
0
10
20
30
40
50
60
70
80
90
100
WEIGHT PERCENT OF ADDITIVE OR BLEND ASPHALT IN TOTAL BINDER

FIGURE 1

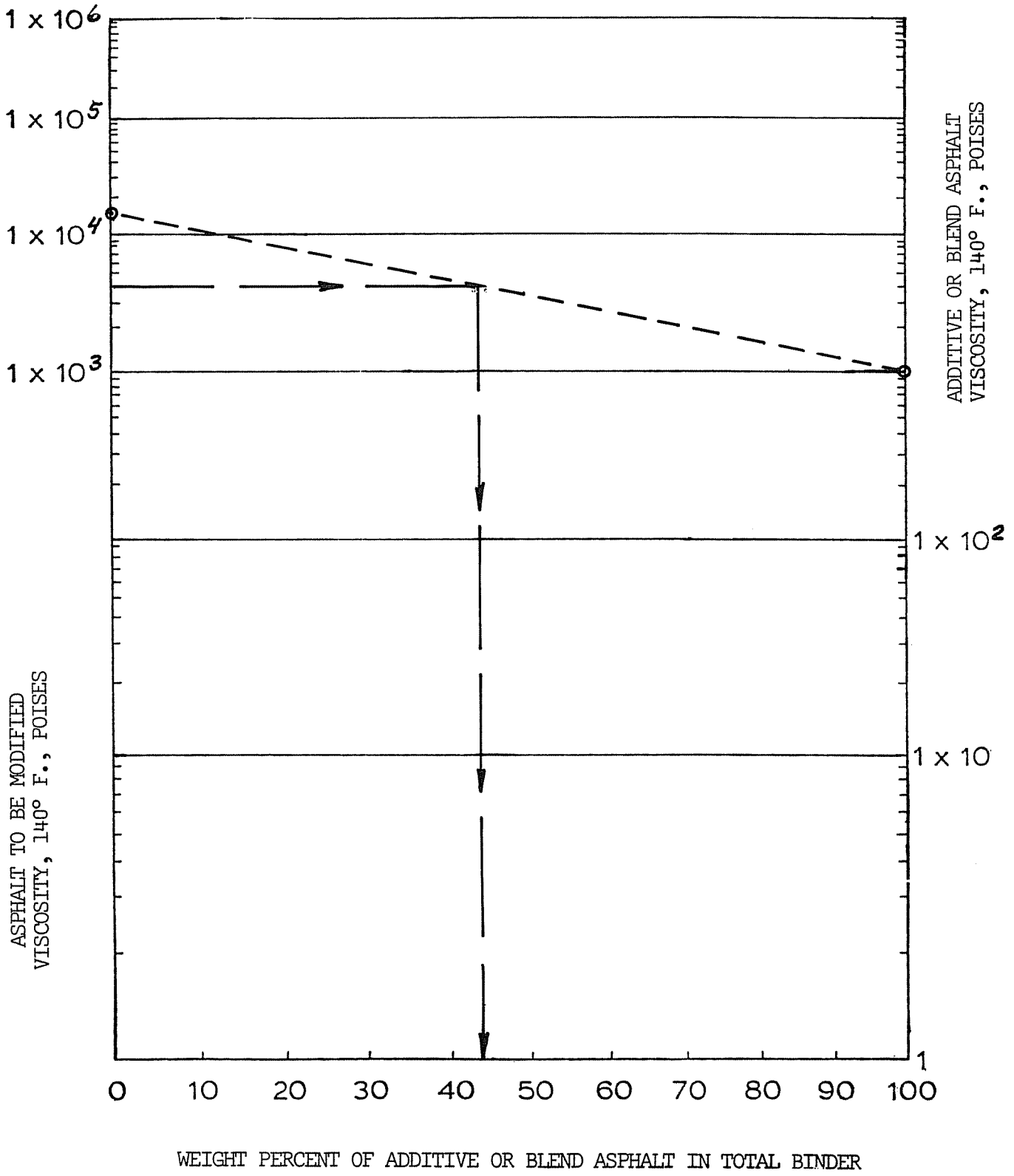
1 x 10^6
1 x 10^5
1 x 10^4
1 x 10^3
1 x 10^2
1 x 10
1
ADDITIVE OR BLEND ASPHALT VISCOSITY, 140° F., POISES
ASPHALT TO BE MODIFIED VISCOSITY, 140° F., POISES
0
10
20
30
40
50
60
70
80
90
100
WEIGHT PERCENT OF ADDITIVE OR BLEND ASPHALT IN TOTAL BINDER

FIGURE 2

METHOD OF TEST FOR DETERMINING THE QUANTITY OF ASPHALT REJUVENATING AGENT REQUIRED FOR AN ASPHALTIC PAVEMENT

(A Modification of California Test No. 345)

SCOPE

1. (a) This method of test describes the procedure for determining the quantity of asphalt rejuvenating agent an asphaltic pavement will absorb in a specified period of time.

NOTE: This test is used primarily for maintenance purposes.

(b) This test method may involve hazardous material, operations, or equipment. This test method does not purport to address all of the safety concerns associated with its use. It is the responsibility of the user to consult and establish appropriate safety and health practices and determine the applicability of any regulatory limitations prior to use.

(c) See Appendix A1 of the Materials Testing Manual for information regarding the procedure to be used for rounding numbers to the required degree of accuracy.

(d) Metric (SI) units and values are shown in this test method with English units and values following in parentheses. Values given for metric and English units may be numerically equivalent (soft converted) for the associated units, or they may be given as rounded or rationalized values (hard converted). Either the metric or English units along with their corresponding values shall be used in accordance with applicable specifications. See Appendix A2 of the Materials Testing Manual for additional information on the metric system.

APPARATUS

2. Apparatus for this test procedure shall consist of the following:

(a) 1 - Aluminum template 152 mm (6") diameter with handle.

(b) 1 - Caulking gun with a 127 mm (5") piece of 6.35 mm (1/4") copper tubing with cap.

(c) 1 - 25 mL graduated cylinder (plastic or glass).

(d) 1 - 127 mm (5") inch trowel.

(e) 2 - small stiff bristle brushes.

(f) 2 - 3.8 liter (1 gallon) friction top cans. One for new medium weight chassis grease. One for used grease.

(g) 1 - 203 mm (8") spatula.

(h) 2 - pieces of yellow lumber crayon.

(i) 1 - stop watch with 60 second dial.

MATERIAL

3. The following materials are required:

(a) Medium weight chassis grease.

(b) A liter (quart) can containing a dilution of 2 parts rejuvenating agent and one part distilled water.

PROCEDURE

4. (a) With lumber crayon and template, draw a 152 mm (6") diameter circle on the pavement.

(b) Extrude grease from the caulking gun on the circle. The diameter of the grease should be about 6 mm (1/4").

(c) Run finger around the outside of the grease ring, pushing a small amount of grease into the pavement. This will form a sealed reservoir for the asphalt rejuvenating agent (2:1 dilution).

(d) Measure 8.3 mL of asphalt rejuvenating agent, 2:1 dilution, in the graduate and pour into grease ring. Start stop watch and quickly brush agent uniformly over the area within the grease ring.

(e) Record the time required for the rejuvenating agent to completely penetrate the surface. Complete penetration is generally indicated by a loss in color of the rejuvenating agent, giving a dull dark appearance to the surface.

NOTE: Loss of color can also occur when evaporation of the water takes place leaving a thin film of the residue on the surface of the pavement giving a shiny appearance. In this case penetration has not occurred.

(f) If 8.3 mL is absorbed within a 15 minute interval, make a new grease ring and repeat test with additional testing solution in increments of 8.3 mL until time of penetration just exceeds 15 minutes.

(g) If 8.3 mL is not absorbed within the 15 minute period, repeat the test using 4.1 mL.

NOTE: 4.1 mL is equivalent to 0.23 L/m^2 (0.05 gal./sq. yd.) spread rate.
8.3 mL is equivalent to 0.45 L/m^2 (0.10 gal./sq. yd.) spread rate.
16.6 mL is equivalent to 0.91 L/m^2 (0.20 gal./sq. yd.) spread rate.

(h) If an application rate of 0.91L/m^2 (0.20 gal./sq. yd.) [16.6 mL] is exceeded, the effect of rejuvenating agent on the properties of the asphaltic pavement (for example, stability/flow, voids, etc.) shall be evaluated.

(i) Graduate can be easily cleaned with water.

(j) Pick up grease with trowel and place in 3.8 liter (1 gallon) can for used grease. Do not mix used grease with new grease.

PROCEDURE FOR DETERMINING PAVEMENT REQUIREMENTS

5. The following procedure is recommended for obtaining the average absorption rate or quantity of rejuvenating agent required for a given section of highway.

(a) In any travel lane, determine the absorption at 8 meter (25 foot) intervals in the outer wheel path, inner wheel path, and between wheel paths, respectively. The three readings should be averaged to obtain the reading for the test area.

(b) This procedure should be repeated at intervals of approximately 600 meters (2000 feet).

REFERENCE

6. "Method of Test for Determining Quantity and Rate of Absorption of Reclamite into an Asphalt Pavement" by Golden Bear Oil Company, Bakersfield, California.

EVALUATION OF PAVEMENT SMOOTHNESS

(An Arizona Method)

SCOPE

1. This test method describes the procedure for determining the smoothness of pavements. Profile measurements are taken on designated area(s) of the pavement. Those measurements are analyzed and reported as International Roughness Index (IRI) values, inches per mile (in/mi).

APPARATUS

2. The equipment used to perform profile testing shall be a General Motors Research (GMR)-type Inertial Profiler, meeting the requirements of ASTM E 950.

METHOD OF MEASURING

3. The test vehicle is driven in the wheel paths of each lane a sufficient number of times to collect two valid individual sets of profile measurements. The speed at which profile measurements are taken shall be a constant speed (± 2 mph), between 30 and 65 mph.

CALCULATIONS

4. (a) Profile measurements taken using the GMR-type Inertial Profiler will be reduced to IRI smoothness values, in accordance with the requirements of ASTM E 1926. IRI smoothness values will be recorded to the nearest 0.1 in/mi for each 0.1 mile increment.

(b) For each individual set of IRI smoothness values, the average value will be determined.

(c) The set of IRI smoothness values with the lowest average value will be used for acceptance purposes.

(d) If necessary, 0.1 mile increment IRI values used for acceptance purposes shall be adjusted to account for any exception areas required by the contract documents.

REPORT

5. A report will be prepared showing:

(a) The date of test.

(b) The name of the test operator(s).

(c) Identification of test vehicle.

(d) Speed of test vehicle during testing.

(e) Project number, if applicable.

(f) The individual IRI value, adjusted as necessary per paragraph 4(d), and recorded to the nearest 0.1 in/mi for each 0.1 lane-mile increment (Actual Smoothness Value "AS").

(g) The location of each 0.1 lane-mile increment for the corresponding individual IRI value.

MARSHALL MIX DESIGN METHOD FOR ASPHALTIC CONCRETE (ASPHALT-RUBBER) [AR-AC]

(An Arizona Method)

SCOPE

1. (a) This method is used to design Asphaltic Concrete (Asphalt-Rubber) [AR-AC] mixes using 4-inch diameter Marshall apparatus.

(b) This test method involves hazardous material, operations, and equipment. This test method does not purport to address all of the safety concerns associated with its use. It is the responsibility of the user to consult and establish appropriate safety and health practices and determine the applicability of regulatory limitations prior to use.

(c) See Appendix A1 of the Materials Testing Manual for information regarding the procedure to be used for rounding numbers to the required degree of accuracy.

APPARATUS

2. This test method is used in conjunction with the test methods listed below. Requirements for the frequency of equipment calibration and verification are found in Appendix A3 of the Materials Testing Manual. The required apparatus is shown in the individual test methods, as appropriate.

ARIZ 201	Sieving of Coarse and Fine Graded Soils and Aggregates
ARIZ 205	Composite Grading
ARIZ 210	Specific Gravity and Absorption of Coarse Aggregate
ARIZ 211	Specific Gravity and Absorption of Fine Aggregate
ARIZ 212	Percentage of Fractured Coarse Aggregate Particles
ARIZ 238	Percent Carbonates in Aggregate
ARIZ 247	Particle Shape and Texture of Fine Aggregate Using Uncompacted Void Content
ARIZ 410	Compaction and Testing of Bituminous Mixtures Utilizing 101.6 mm (Four-Inch) Marshall Apparatus

ARIZ 415	Bulk Specific Gravity and Bulk Density of Compacted Bituminous Mixtures
ARIZ 416	Preparing and Splitting Field Samples of Bituminous Mixtures for Testing
ARIZ 806	Maximum Theoretical Specific Gravity of Laboratory Prepared Bituminous Mixtures (Rice Test)
AASHTO T 96	Resistance to Degradation of Small-Size Coarse Aggregate by Abrasion and Impact in the Los Angeles Machine
AASHTO T 176	Plastic Fines in Graded Aggregates and Soils by Use of the Sand Equivalent Test
AASHTO T 228	Specific Gravity of Semi-Solid Bituminous Materials

MATERIALS

3. (a) Mineral Aggregate - The mineral aggregate used in the design shall be produced material from the source(s) for the project. Use of natural sand is not permitted in AR-AC mixtures.

1) Mineral aggregate from each source shall be tested for compliance to the project requirements for Abrasion (AASHTO T 96).

2) The composited gradation of the aggregate and the composited gradation of the aggregate-mineral admixture blend shall comply with the grading limits of the specifications.

3) The composited mineral aggregate shall conform to the requirements of the specifications for Sand Equivalent (AASHTO T 176), Fractured Coarse Aggregate Particles (ARIZ 212), Uncompacted Void Content (ARIZ 247), and Percent Carbonates (ARIZ 238) when applicable.

(b) Bituminous Material - The bituminous material used in the design shall be asphalt-rubber material [hereinafter Crumb Rubber Asphalt (CRA)], conforming to the requirements of Section 1009 of the specifications, which is to be used in the production of the AR-AC. The specific gravity of the CRA and of the asphalt cement used in the CRA shall be determined in accordance with AASHTO T 228.

(c) Mineral Admixture - Mineral admixture is required. The mineral admixture used in the design shall be the same type of material to be used in production of the AR-AC. The mineral admixture shall conform to the requirements of the specifications.

DETERMINATION OF COMPOSITE GRADATION

4. (a) The gradation of the aggregate from each individual component stockpile or bin shall be determined in accordance with ARIZ 248 using washed sieve analysis Alternate #4 or Alternate #5. For alternate #5, washing of the coarse aggregate may be performed on the composite Plus No. 4 material and applied to the composite percent pass the minus No. 200 determined from the unwashed coarse sieving and washed fine sieving of the individual stockpiles.

(b) The composite gradation of the mineral aggregate is determined using desired percentages of each component based on washed sieve analysis. Mix designs may be developed based on bin or stockpile material, as appropriate for the respective mix production facility to be used.

(c) The mineral aggregate composite shall be determined in accordance with ARIZ 205.

(d) The aggregate-mineral admixture blend composite is determined by adjusting the mineral aggregate composite (percent passing) for mineral admixture by performing the calculation in Equation 1 for each sieve:

Equation 1:

$$\begin{pmatrix} \text{\% passing} \\ \text{each sieve} \\ \text{[Adjusted for} \\ \text{Mineral} \\ \text{Admixture]} \end{pmatrix} = \frac{\begin{pmatrix} \text{\% passing} \\ \text{each sieve in} \\ \text{the aggregate} \\ \text{composite} \end{pmatrix} + \begin{pmatrix} \text{\% Mineral} \\ \text{Admixture} \end{pmatrix}}{(100) + (\text{\% Mineral Admixture})} \times 100$$

(e) The composited gradation of the aggregate and the composited gradation of the aggregate-mineral admixture blend shall be shown on the design report, along with the percentage of each material.

PREPARING AGGREGATE SAMPLES FOR MIX DESIGN TESTING

5. Based on the stockpile or bin composite aggregate gradation, the aggregate samples needed for mix design tests are prepared as follows.

(a) Representative samples of material which are retained on the individual No. 8 and larger sieve sizes and the minus No. 8 material from each stockpile or bin are used to prepare the aggregate samples for mix design testing.

(b) Table 1 shows the aggregate sample sizes, the number of samples required for each test listed, and which samples include mineral admixture. The aggregate weight shown for Maximum Theoretical Specific Gravity will provide 3 Rice test specimens and the amount shown for Density-Stability/Flow will produce 3 Marshall specimens.

Table 1

Test	Sample Size	Number of Samples
Fine Aggregate Specific Gravity/ Absorption (ARIZ 211)	1200 grams of Mineral Aggregate [No mineral admixture]	1
Coarse Aggregate Specific Gravity/Absorption (ARIZ 210)	2000 grams of Mineral Aggregate [No mineral admixture]	1
Maximum Theoretical Specific Gravity (Rice Test) (ARIZ 806, as modified in Section 10)	3000 grams of Mineral Aggregate [Plus 30 grams of mineral admixture]	1 [Yields 3 test specimens]
Density-Stability/Flow (ARIZ 415 and ARIZ 410, as modified in Sections 8 and 9 respectively)	3000 grams of Mineral Aggregate (See Note 1) [Plus 30 grams of mineral admixture]	3 (See Note 2) [Each sample yields 1 set of 3 Marshall Specimens]

Note 1: Generally 3000 grams of mineral aggregate will provide specimens of acceptable heights, but adjustments may be necessary in some cases. Use Equation 2 to adjust aggregate weights as necessary to conform to specimen height requirements of 2.50 ± 0.20 inches.

Equation 2: $$\text{Adjusted Wt. of Aggregate} = \frac{\begin{pmatrix}\text{Combined Bulk O.D.} \\ \text{Agg. Specific Gravity}\end{pmatrix}}{2.650} \text{ x } 3000$$

Note 2: Requires one (1) sample for each CRA binder content to be tested (minimum of 3 contents, with 3 Marshall specimens at each content).

(c) After the aggregate samples for the Rice and Marshall specimens have been composited, add 1% mineral admixture by weight of the aggregate, and mix thoroughly. Add 3% water by dry weight to each sample and mix thoroughly to wet the mineral admixture and aggregate surfaces. After mixing, dry to constant weight in accordance with paragraph 7(a).

AGGREGATE SPECIFIC GRAVITIES AND ABSORPTION

6. Determine the Bulk Oven Dry, S.S.D., Apparent Specific Gravities and Absorption for the fine aggregate (Minus No. 4) and the coarse aggregate (Plus No. 4) in accordance with ARIZ 211 and ARIZ 210 respectively.

(a) Using Equation 3, calculate the Combined Bulk Oven Dry (Gsb), S.S.D., and Apparent Specific Gravities of the aggregate-mineral admixture blend.

Equation 3:

$$\begin{pmatrix}\text{Combined Specific Gravity}\\ \text{of Aggregate and Mineral}\\ \text{Admixture Blend}\end{pmatrix} = \frac{P_c + P_f + P_{admix}}{\frac{P_c}{G_c} + \frac{P_f}{G_f} + \frac{P_{admix}}{G_{admix}}}$$

Where:

P_c, P_f	=	Weight percent of coarse aggregate and fine aggregate respectively. Determined from the aggregate composite without mineral admixture.
P_{admix}	=	Percent mineral admixture by weight of the aggregate.
$P_c + P_f$	=	100
$P_c + P_f + P_{admix}$	=	100 + % Mineral Admixture
G_c, G_f	=	Specific gravity of the coarse and the fine aggregate respectively.
G_{admix}	=	Specific gravity of the mineral admixture.

Type II Cement	=	3.14
Type IP Cement	=	3.00
Hydrated Lime	=	2.20

(b) Using Equation 4, calculate the Combined Absorption of the aggregate-mineral admixture blend.

Equation 4:

$$\begin{pmatrix}\text{Combined Absorption}\\ \text{of Aggregate and Mineral}\\ \text{Admixture Blend}\end{pmatrix} = \frac{(P_c \times A_c) + (P_f \times A_f) + (P_{admix} \times A_{admix})}{P_c + P_f + P_{admix}}$$

Where:	P_c, P_f	=	Weight percent of coarse aggregate and fine aggregate respectively. Determined from the aggregate composite without mineral admixture.
	P_{admix}	=	Percent mineral admixture by weight of the aggregate.
	$P_c + P_f$	=	100
	$P_c + P_f + P_{admix}$	=	100 + % Mineral Admixture
	A_c, A_f	=	Percent water absorption of the coarse aggregate and the fine aggregate respectively.
	A_{admix}	=	Percent water absorption of mineral admixture (<u>assumed to be 0.0%</u>).

PREPARATION OF SPECIMENS FOR DENSITY AND MARSHALL STABILITY/FLOW DETERMINATION

7. Marshall specimens shall be prepared as follows.

NOTE: Normally a range of 3 different CRA binder contents at 1.0% increments will provide sufficient information, although in some cases it may be necessary to prepare additional sets of samples at other CRA binder contents. Two series of CRA binder contents are customarily used: either 6.0, 7.0, and 8.0% CRA by total mix weight; or 6.5, 7.5, and 8.5% CRA by total mix weight.

NOTE: Although a wide range of mixers may provide the desired well-coated homogeneous mixture, commercial potato mashers or dough mixers with whips are often used. Minimum recommended capacity of the mixing bowl is 10 quarts.

(a) The aggregate-mineral admixture blend shall be dried to constant weight at 325 ± 3 ºF and shall be at this temperature at the time of mixing with the CRA. If necessary, a small amount of proportioned Pass No. 8 aggregate make-up material shall be added to bring samples to the desired weight.

(b) Before each batch of AR-AC is mixed, the CRA shall be heated in a loosely covered container in a forced draft oven for approximately 2 hours or as necessary to reach a temperature of 330 ± 5 ºF. Upon removal from the oven, the CRA shall be thoroughly stirred using a stiff-bladed flat spatula with blade approximately 1-inch wide, 1/8-inch thick, and long enough to reach the bottom of the container. (As an alternate to a stiff-bladed spatula, flat bar stock meeting the dimensional requirements may be used.) Use combined circular, vertical, and radial stirring motions to uniformly distribute the rubber particles throughout the CRA before adding the designated proportion to the aggregate-mineral admixture blend. If there is any delay before beginning of mixing the CRA with the aggregate-mineral admixture blend, thoroughly stir the CRA again immediately before pouring.

CAUTION: To avoid damage to the CRA, do not use a hot plate or open flame to bring it to temperature. Once the CRA temperature has reached 330 ± 5 ºF, the container may briefly be moved to a hot plate for no more than 5 minutes to maintain temperature. If a hot plate is utilized, the CRA shall be constantly stirred to avoid sticking or scorching. Do not heat the CRA longer than necessary to complete batching and mixing operations (approximately three hours total heating time), or damage may occur.

NOTE: Before each batch is mixed, the mixing bowl and whip shall be heated to 325 ± 3 ºF, and the weight of CRA required to provide the desired content shall be calculated.

(c) The aggregate-mineral admixture blend and the appropriate amount of CRA shall be mixed together as quickly as possible in order to maintain the required mixing temperature of 325 ± 3 ºF while producing a well-coated homogeneous AR-AC mixture. **Mechanical mixing is required.**

NOTE: After mechanical mixing, hand mixing may be used as needed to obtain more thorough coating of the aggregate.

(d) Immediately after mixing, each batch of AR-AC shall be placed on a tarp or sheet of heavy paper and in a rolling motion thoroughly mixed and spread according to the procedures described in ARIZ 416. The circular mass shall be cut into 6 equal pie-shaped segments. Take opposite segments for each individual specimen and use up the entire batch.

(e) Each AR-AC specimen shall be spread in a large pan at nominal single-stone thickness. Avoid stacking particles as feasible. Allow specimen to cure for 2 hours ± 10 minutes at 300 ± 5 ºF.

(f) A mold assembly (base plate, mold, and collar) shall be heated to approximately 325 ± 3 ºF. The face of the compaction hammer shall be thoroughly cleaned and heated on a hot plate set at 325 ± 3 ºF.

(g) Place a 4-inch diameter paper disc in the bottom of the mold before the mixture is introduced. Place the entire specimen in the mold with a heated spoon. Spade the mixture vigorously with a heated flat metal spatula, with a blade approximately 1-inch wide and 6-inches long and stiff enough to penetrate the entire layer of material, 15 times around the perimeter and 10 times at random into the mixture, penetrating the mixture to the bottom of the mold. Smooth the surface of mix to a slightly rounded shape.

NOTE: To ease removal of the end papers after compaction, they may be sprayed with a light application of aerosol based vegetable oil. PAM brand cooking spray has been found to work well for this application.

(h) Before compaction, put the mold containing the AR-AC specimen in an oven for approximately one hour or as needed to heat the mixture specimen to the proper compaction temperature of 325 ± 3 ºF.

(i) Immediately upon removing the mold assembly loaded with mix from the oven, place a paper disc on top of mixture, place the mold assembly on the compaction pedestal in the mold holder, and apply 75 blows with the compaction hammer. Remove the base plate and collar, and reverse and reassemble the mold. Apply 75 compaction blows to the face of the reversed specimen.

NOTE: The compaction hammer shall apply only one blow after each fall, that is, there shall not be a rebound impact. The compaction hammer shall meet the requirements specified in Section 2(c) of ARIZ 410.

(j) Remove the collar and top paper disc. Remove the base plate and remove the bottom paper disc while the specimen is still hot. Replace the base plate immediately, making sure to keep the mold and specimen oriented so that the bottom face of the compacted specimen remains directly in contact with, and is fully supported by, the base plate.

NOTE: Paper discs need to be removed while the AR-AC specimen is hot. The discs are very difficult to remove after the specimens have cooled.

(k) If any part of the top surface of a compacted specimen is visually observed to increase in height (rise or swell in the mold) after compaction, stop testing and discard the prepared specimens. Adjust the gradation of the aggregate-mineral admixture blend to provide additional void space to accommodate the CRA, then batch and compact new trial AR-AC specimens. If no visible increase in height occurs, proceed with paragraphs 7(l) through 7(o).

(l) Allow each compacted specimen to cool in a vertical position in the mold (with the base plate on the bottom and the top surface exposed to air) until they are cool enough to be extruded without damaging the specimen. Rotate the base plate occasionally to prevent sticking.

NOTE: Generally specimens can be extruded without damage when they are at a temperature of approximately 77 to 90 ºF.

NOTE: Cooling may be accomplished at room temperature, or in a 77 ºF air bath. If more rapid cooling is desired, the mold and specimen may be placed in front of a fan until cool, ***but do not turn the mold on its side***.

(m) Orienting the mold and specimen so that the ram pushes on the bottom face (base plate face) of the specimen, extrude the specimen.

NOTE: Care shall be taken in extruding the specimen from the mold, so as not to deform or damage the specimen. If any specimen is deformed or damaged during extrusion, the entire set of specimens at that CRA binder content shall be discarded and a new set prepared.

(n) Immediately upon extrusion, measure and record the height of the specimen to the nearest 0.001 inch and determine and record its weight in air to the nearest 0.1 gram.

NOTE: Compacted AR-AC specimens shall be 2.50 ± 0.20 inches in height. If this criteria is not met for the specimens at each CRA binder content, the entire set of specimens at that CRA binder content shall be discarded and a new set prepared after necessary adjustments in the aggregate weight have been made using Equation 2 (see Note 1 in Table 1).

(o) Repeat the procedures in paragraphs 7(e) through 7(n) for the required specimens.

BULK SPECIFIC GRAVITY/BULK DENSITY OF SPECIMENS

8. (a) Determine the bulk specific gravity of the three compacted AR-AC specimens at each CRA binder content in accordance with ARIZ 415, Method A, except that the paraffin method shall not be used. The determination of the “Weight in Water” and “S.S.D. Weight" of each specimen will be completed before the next specimen is submerged for its "Weight in Water" determination.

NOTE: Specimens fabricated in the laboratory that have not been exposed to moisture do not require drying after extrusion from the molds. The specimen weight in air obtained in paragraph 8(a) is its dry weight.

(b) Determine the density in pounds per cubic foot (pcf) by multiplying the specific gravity of each specimen by 62.3 pcf.

NOTE: For each CRA binder content, the densities of individual compacted specimens shall not differ by more than 2.0 pcf. If this density requirement is not met, the entire set of specimens at that CRA binder content shall be discarded and a new set of specimens prepared.

(c) Determine the average bulk specific gravity (G_{mb}) and/or average bulk density values for each CRA binder content and plot on a separate graph versus CRA binder content. Connect the plotted points with a smooth curve that provides the “best fit” for all values as shown in Figure 1.

STABILITY AND FLOW DETERMINATION

9. The stability, stability corrected for height, and flow of each specimen shall be determined according to ARIZ 410. (Stability and stability corrected for height are recorded to the nearest 10 pounds, and flow is recorded to the nearest 0.01 inch.)

(a) Determine and record the average values for stability corrected for height (to the nearest 10 pounds) and flow (to the nearest 0.01 inch) for each CRA binder content, and plot each on a separate graph using the same scale for CRA binder content as used in 8(c). Connect the plotted points with a smooth curve that provides the “best fit” for all values as shown in Figure 1.

NOTE: Flow values may be high compared to conventional asphaltic concrete mixtures.

MAXIMUM THEORETICAL SPECIFIC GRAVITY (RICE TEST)

10. The maximum theoretical specific gravity of the mixture shall be determined in accordance with ARIZ 806 at 6.0% CRA binder content with the following modifications.

(a) Prepare the AR-AC specimens including mineral admixture according to the procedures described in Section 5 and paragraphs 7(a) through 7(c) using 6.0% CRA by total mix weight. A liquid anti-stripping agent is not used.

(b) Spread the entire Rice sample in a large pan at nominal single-stone thickness. Avoid stacking particles as feasible.

(c) Oven cure the entire Rice sample for 2 hours ± 10 minutes at 300 ± 5 ºF.

(d) Immediately upon removal from the oven, place the sample on a tarp or sheet of paper and break up fine particle agglomerations. Then, in a rolling motion thoroughly mix and spread the sample according to the procedures described in ARIZ 416. The circular mass shall be cut into 6 equal pie-shaped segments. Take opposite segments for each individual test sample and use up the entire batch.

(e) Using Equation 5, calculate the effective specific gravity of the aggregate-mineral admixture blend (G_{se}).

Equation 5:

$$G_{se} = \frac{100 - P_{br}}{\frac{100}{G_{mm}} - \frac{P_{br}}{G_b}}$$

Where:
G_{se} = Effective specific gravity of the aggregate-mineral admixture blend.
G_{mm} = Maximum theoretical specifc gravity of the AR-AC at CRA binder content P_{br}.
P_{br} = CRA binder content at which the Rice test was performed.
G_b = Specific gravity of the CRA.

(f) Using Equation 6, calculate the maximum theoretical specific gravity (G_{mm}) for different CRA binder contents.

NOTE: G_{se} is considered constant regardless of binder content.

Equation 6:

$$G_{mm} = \frac{100}{\frac{P_s}{G_{se}} + \frac{P_b}{G_b}}$$

Where:
G_{mm} = Maximum theoretical specific gravity of the AR-AC at CRA binder content P_b.
P_s = Aggregate and mineral admixture content, percent by total weight of mix ($100-P_b$).
P_b = CRA binder content, percent by total weight of mix.
G_{se} = Effective specific gravity of the aggregate-mineral admixture blend.
G_b = Specific gravity of the CRA.

DETERMINATION OF DESIGN CRA BINDER CONTENT

11. The design CRA binder content is determined as follows in paragraphs 11(a) through 11(e).

(a) For each CRA binder content used, calculate effective voids (V_a), percent absorbed CRA (P_{ba}), voids in mineral aggregate (VMA), and voids filled with CRA (VFA) using the following equations.

1) Using Equation 7, calculate the effective voids (V_a). The calculated G_{mm} values for the respective CRA binder contents are used to determine the corresponding effective voids content of the compacted Marshall specimens at each CRA binder content level.

Equation 7:

$$V_a = \left(\frac{G_{mm} - G_{mb}}{G_{mm}} \right) \times 100$$

Where:
V_a = Effective voids in the compacted mixture, percent of total volume.
G_{mm} = Maximum theoretical specifc gravity of the AC-AR at CRA binder content P_b.
G_{mb} = Bulk specific gravity of compacted mixture specimens.

2) Using Equation 8, calculate the percent absorbed CRA (P_{ba}).

Equation 8:

$$P_{ba} = \left(\frac{G_{se} - G_{sb}}{G_{sb} \times G_{se}} \right) \times G_b \times 100$$

Where:
P_{ba} = Absorbed CRA, percent by total weight of mix.
G_{se} = Effective specific gravity of the aggregate-mineral admixture blend.
G_b = Specific gravity of the CRA.
G_{sb} = Bulk oven dry specific gravity of the aggregate-mineral admixture blend.

3) Using Equation 9, calculate voids in mineral aggregate (VMA).

Equation 9:

$$VMA = 100 - \left(\frac{G_{mb} \times P_s}{G_{sb}} \right)$$

Where:
VMA = Voids in the mineral aggregate, percent of bulk volume.
G_{sb} = Bulk oven dry specific gravity of the aggregate-mineral admixture blend.
G_{mb} = Bulk specific gravity of compacted mixture specimens.
P_s = Aggregate and mineral admixture content, percent by total weight of mix ($100-P_b$).

4) Using Equation 10, calculate voids filled with CRA (VFA).

Equation 10:

$$VFA = \left(\frac{VMA - V_a}{VMA} \right) \times 100$$

Where:
VFA = Voids filled with CRA.
VMA = Voids in the mineral aggregate, percent of bulk volume.
V_a = Effective voids in the compacted mixture, percent of total volume.

(b) Using a separate graph for each of the volumetric properties calculated in paragraph 11(a), plot the average value for each set of three specimens versus CRA binder content. Connect the plotted points with a smooth curve that provides the “best fit” for all values as shown in Figure 1.

NOTE: The percentage of absorbed CRA (P_{ba}) and the effective specific gravity of the aggregate-mineral admixture blend (G_{se}) do not vary with CRA binder content.

(c) The design CRA binder content shall be the CRA binder content which meets the Mix Design Criteria requirements of the specifications, and provides effective voids as close as possible to the middle of the specified range.

(d) Use the effective voids (V_a) plot or interpolation to select the CRA binder content that yields the target effective voids content in the specifications. Use interpolation or the other plots to determine the values of bulk specific gravity (G_{mb}) and/or bulk density, VMA, VFA, stability and flow that correspond to the selected CRA binder content, and compare these with the limits in the specifications. Properties for which limits are not specified are evaluated by the Engineer for information only.

(e) If it is not possible to obtain specification compliance within the range of CRA binder contents used, a determination must be made to either redesign the mix (different aggregate gradation or source) or prepare additional specimens at other CRA binder contents for bulk specific gravity (G_{mb}) and/or bulk density, stability/flow testing, and volumetric analyses.

(f) Using Equation 6, calculate the maximum theoretical specific gravity (G_{mm}) for the design CRA design content. The maximum theoretical density is determined by multiplying the calculated G_{mm} by 62.3 pounds per cubic foot.

(g) For information, calculate the following volumetric properties at the design CRA binder content.

1) Using Equation 11, calculate the percent effective CRA binder content (P_{be}) of the AR-AC mixture.

Equation 11:

$$P_{be} = P_b - \left(\frac{P_{ba} \times P_s}{100} \right)$$

Where:
- P_{be} = Percent effective CRA binder content of the mixture (free binder not absorbed).
- P_b = CRA binder content, percent by total weight of mix.
- P_{ba} = Absorbed CRA, percent by total weight of mix.
- P_s = Aggregate and mineral admixture content, percent by total weight of mix ($100-P_b$).

2) Using Equation 12, calculate the effective CRA volume (V_{be}).

Equation 12:

$$V_{be} = \frac{P_{be} \times G_{mb}}{G_b}$$

Where: V_{be} = Effective CRA volume, percent of bulk volume.
P_{be} = Percent effective CRA binder content of the mixture (free binder not absorbed).
G_{mb} = Bulk specific gravity of compacted mixture specimens.
G_b = Specific gravity of the CRA.

MIX DESIGN GRADATION TARGET VALUES

12. The desired target values for the aggregate composite and the aggregate-mineral admixture blend composite in the AR-AC mixture shall be from the composited gradation and shall be expressed as percent passing particular sieve sizes as required by the specifications for the project.

REPORT

13. Report the test results and data obtained on the appropriate form. Liberal use of the remarks area to clarify and/or emphasize any element of the design is strongly recommended. Information required in the mix design report includes:

(a) Aggregate and Mineral Admixture:
  1) Aggregate source and identification
  2) Individual aggregate stockpile or bin gradations
  3) Mineral admixture type, source, and specific gravity
  4) Aggregate blend proportions and composite gradation for the mix design, with and without mineral admixture
  5) Fine and coarse aggregate specific gravities (Bulk Oven Dry, SSD, Apparent) and absorption
  6) Combined specific gravities [Bulk Oven Dry (G_{sb}), SSD, Apparent] and absorption of the aggregate-mineral admixture blend
  7) Aggregate quality
    a) LA Abrasion
    b) Sand Equivalent
    c) Fractured Coarse Aggregate Particles (Percentage with one fractured face and percentage with two fractured faces)

d) Uncompacted Void Content
e) Carbonates (When applicable)

(b) CRA Binder Design (from supplier), including:
1) Source and grade of base asphalt cement
2) Source and type of crumb rubber
3) Crumb rubber gradation
4) Proportions of asphalt cement and crumb rubber
5) CRA binder properties, in compliance with Section 1009 of the ADOT Specifications
6) CRA specific gravity (G_b)
7) Asphalt cement specific gravity

(c) Maximum theoretical specific gravity (G_{mm}) and density (pcf) at the CRA binder content at which the Rice test was performed (P_{br})

(d) Mixture Compaction Trials:
1) CRA binder content (P_b)
2) Aggregate and mineral admixture content (P_s)
3) Calculated maximum theoretical specific gravity (G_{mm}) and density (pcf)
4) Bulk specific gravity (G_{mb}) and bulk density (pcf) of Marshall specimens
5) Percent effective voids (V_a)
6) Percent voids in mineral aggregate (VMA)
7) Percent air voids filled (VFA)
8) Percent absorbed CRA (P_{ba})
9) Effective specific gravity of the aggregate-mineral admixture blend (G_{se})
10) Effective CRA binder contents (P_{be}) and volumes (V_{be})
11) Marshall stability (nearest 10 pounds)
12) Marshall flow (0.01 inch)

(e) Plots of the following properties versus CRA binder content:
1) Percent effective voids (V_a)
2) Percent voids in mineral aggregate (VMA)
3) Percent air voids filled (VFA)
4) Bulk specific gravity (G_{mb}) and/or bulk density
5) Marshall stability
6) Marshall flow

(f) Final Design:
1) CRA binder content (P_b)
2) Calculated maximum theoretical specific gravity (G_{mm}) and density (pcf)
3) Bulk specific gravity (G_{mb}) and bulk density (pcf) of Marshall specimens
4) Percent effective voids (V_a)

5) Percent voids in mineral aggregate (VMA)
6) Percent air voids filled (VFA)
7) Percent absorbed CRA (P_{ba})
8) Effective specific gravity of the aggregate-mineral admixture blend (G_{se})
9) Effective CRA binder contents (P_{be}) and volumes (V_{be})
10) Marshall stability (nearest 10 pounds)
11) Marshall flow (0.01 inch)

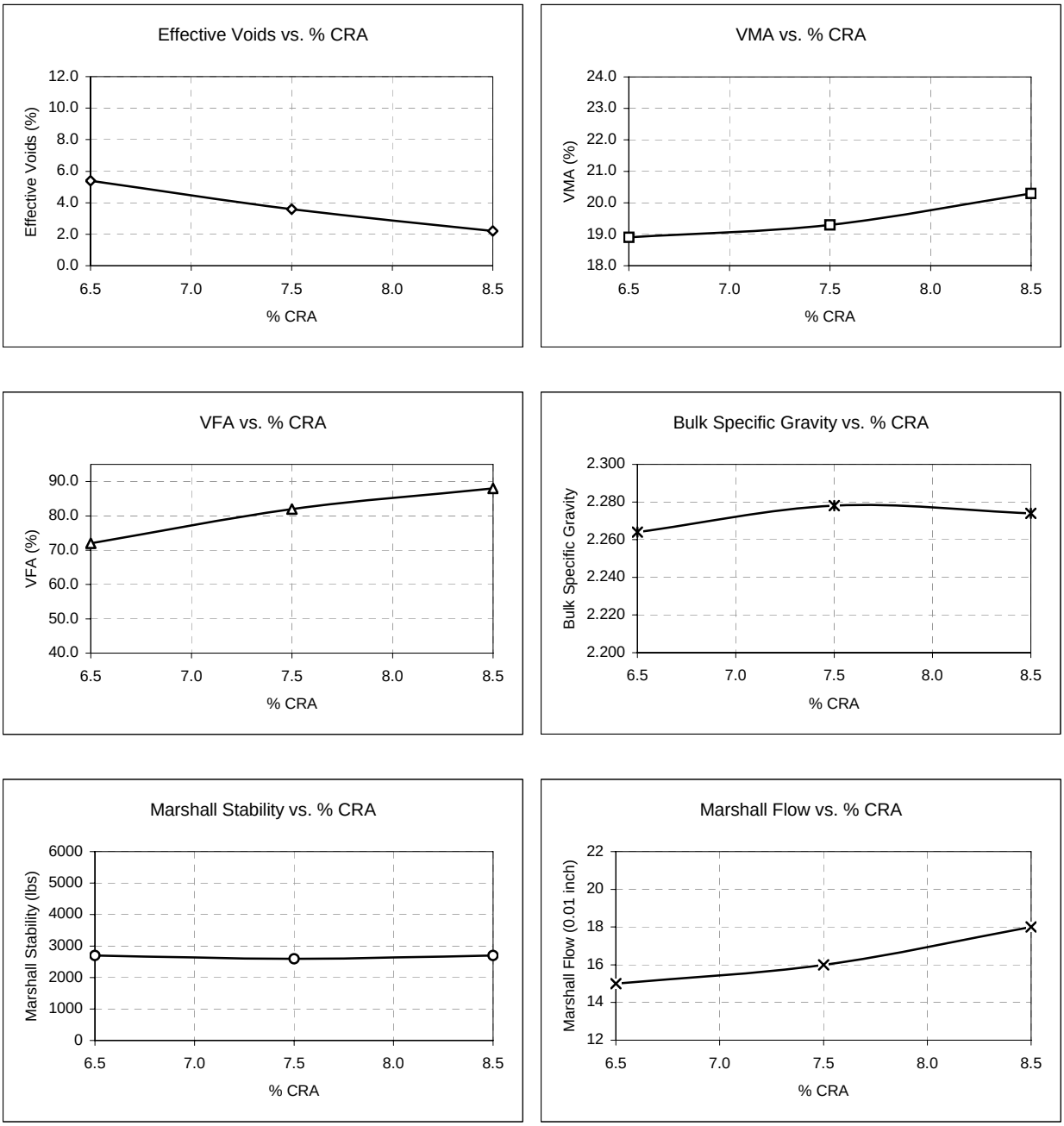

Example Plots of Effective Voids, VMA, VFA, Bulk Specific Gravity, Marshall Stability, and Marshall Flow versus CRA Binder Content

FIGURE 1

ARIZONA DEPARTMENT OF TRANSPORTATION

MATERIALS QUALITY ASSURANCE PROGRAM

October 1, 1999

ADOT MATERIALS QUALITY ASSURANCE PROGRAM

Table of Contents

SECTION	PAGE
I. Scope	4
II. List of Abbreviations	5
III. Glossary of Terms	6
IV. List of Figures	8
V. Quality Assurance	9
A. Contractor Testing	9
B. Materials Acceptance	9
1. Acceptance Sampling and Testing	10
2. Materials Certification	10
C. Independent Assurance Sampling and Testing	11
1. Frequency of Independent Assurance Sampling and Testing	12
2. Comparison and Reporting of Independent Assurance Sampling and Testing	14
D. Correlation Testing	18
1. Frequency of Correlation Testing	18
2. Comparison and Reporting of Correlation Testing	19
E. Final Certification of Materials Incorporated in the Work	22
1. Materials Sample Checklist	22
2. Materials Records	22
3. Certification of Materials for Federal-Aid Projects	27
4. Certification of Materials for Local Government Federal-Aid Projects	28
5. Certification of Materials for Non Federal-Aid Projects	28

Table of Contents
(Continued)

SECTION	PAGE
VI. Laboratory Qualifications	29
A. ADOT Laboratory Inspection Program	29
1. Participation	29
2. Equipment Inspection	29
3. Procedural Inspection	30
4. Procedure and Report	30
B. ADOT Proficiency Sample Program	30
1. Participation	30
2. Proficiency Samples	31
3. Analysis/Reporting of Proficiency Sample Results	32
C. Conflict of Interest	33
VII. Sampling and Testing Personnel Qualification Requirements	33
APPENDIX A System for the Evaluation of Testing Labs	
APPENDIX B Contractor Testing Included in the Acceptance Decision	
APPENDIX C Sampling Guide Schedule	

I. SCOPE

The ADOT Materials Quality Assurance Program has been established in accordance with requirements of the revised Code of Federal Regulations 23, Part 637, Subpart B - Quality Assurance Procedures for Construction. Documented herein are details of the Quality Assurance Program and applicable policies, procedures, and guidelines.

The Quality Assurance Program represents the Department's commitment to consistently provide our customers with products and services that meet mutually agreed upon requirements. The program is intended to ensure all materials incorporated into ADOT projects satisfy specification requirements and to provide the highest degree of confidence in the reliability of tests performed by laboratories for ADOT projects.

This document has been prepared for utilizing materials acceptance procedures which are now generally employed by ADOT, i.e., acceptance sampling and testing being performed by ADOT or its designated agent(s). **Appendix B** is contained herein to comply with the requirements of CFR 23, Part 637, Subpart (B), which allows the use of contractor test results in making the acceptance decision. At present, contractor testing activities are not included in the acceptance decision on a routine basis. For projects which clearly allow the use of contractor's test results in the acceptance decision, reference must be made to **Appendix B**.

The Quality Assurance Program is administered by the Materials Group Quality Assurance Section. Revisions to this program will be issued by the Quality Assurance Section through the authority of the Assistant State Engineer, Materials Group.

II. LIST OF ABBREVIATIONS

AAP	AASHTO Accreditation Program
AASHTO	American Association of State Highway and Transportation Officials
ACI	American Concrete Institute
ADOT	Arizona Department of Transportation
AMRL	AASHTO Materials Reference Laboratory
ASTM	American Society for Testing and Materials
ATI	Arizona Technical Institute
CCRL	Cement and Concrete Reference Laboratory
CFR	Code of Federal Regulations
FAPG	Federal-Aid Policy Guide
I.A.	Independent Assurance Sampling and Testing Program
ITD	Intermodal Transportation Division
NICET	National Institute for Certification in Engineering Technologies
PPD	Materials Policy and Procedure Directive
RME	Regional Materials Engineer
QA	Quality Assurance
QC	Quality Control

III. GLOSSARY OF TERMS

Acceptance Program - All factors used by the State to determine the quality of the product as specified in the contract requirements. These factors include acceptance sampling and testing, and inspection of materials and workmanship. If the contractor's test results are utilized in the acceptance decision, as explained in **Appendix B**, the acceptance program will include contractor sampling and testing along with verification sampling and testing performed by ADOT or its designated agent(s).

Acceptance Sampling and Testing - Sampling and testing performed to determine the quality and acceptability of the materials and workmanship incorporated in a project.

Certification Acceptance Projects - Federal-aid projects which are advertised, awarded, and administered by a Local Government agency which satisfies the requirements of the "ADOT Certification Acceptance Procedures".

Contractor Testing - Random sampling and testing and other operational techniques and activities that are performed by the contractor/vendor to fulfill the contract requirements. Contractor testing is normally sampling and testing performed by the contractor for quality control of his materials. As explained in **Appendix B**, if project requirements allow, the contractor may also perform sampling and testing which is used in the acceptance decision. If the contractor's sampling and testing is used in the acceptance decision, verification sampling and testing by ADOT or its designated agent(s) must be performed to validate the quality and acceptability of materials and workmanship.

Correlation Testing Program - Testing performed to check or establish variability of testing procedures and equipment between testing laboratories. ADOT requires split samples be tested by the Project Laboratory and the Regional or Central Laboratory.

Independent Assurance Sampling and Testing Program - Activities that are an unbiased and independent evaluation of sampling and testing used in the acceptance program. Independent Assurance samples and tests or other procedures shall be performed by qualified State personnel, or State designated agents such as qualified consultants, who do not have direct responsibility for contractor, acceptance, or verification sampling and testing on a project. The results of independent assurance tests are not used for determining the quality and acceptability of the materials and workmanship. Tests performed by the Materials Group Central Laboratory for use in the acceptance decision are not covered by the Independent Assurance Sampling and Testing Program.

Inspection - The process of observing, measuring, examining, testing, gauging, or otherwise evaluating materials, products, services, testing activities, and equipment.

Laboratory Technician - An employee of the laboratory who is assigned to perform the actual testing operations primarily conducted in the laboratory. Certain specifications may require technicians who are certified through appropriate certification programs determined by the Department.

Proficiency Sample Program - Homogeneous samples that are distributed and tested by two or more laboratories. The test results are compared to assure that the laboratories are obtaining results within prescribed limits of variability.

Qualified Laboratories - Laboratories which have been approved to perform testing activities for ADOT. These laboratories have met the requirements of the ADOT "System for the Evaluation of Testing Laboratories". The ADOT "Directory of Approved Materials Testing Laboratories" lists laboratories meeting this criteria.

Qualified Sampling and Testing Personnel - Personnel who meet the requirements as established by ADOT.

Quality - Consistently conforming to mutually agreed upon requirements.

Quality Assurance - All those planned and systematic activities necessary to provide adequate confidence that a product or service satisfies given requirements for quality.

Quality Assurance Program - The organizational structure, policies, responsibilities, procedures, processes, and resources utilized for implementing quality assurance activities and ensuring continued compliance with applicable standards.

Random Sample - A sample drawn from a lot in which each increment in the lot has an equal probability of being chosen. All samples used for contractor, acceptance, and verification sampling and testing shall be random samples.

Testing Laboratory - An organization that measures, examines, performs tests; or otherwise determines the characteristics, properties, and performance of materials or products. ADOT issues the "Directory of Approved Materials Testing Laboratories" which lists testing laboratories approved to perform testing activities on ADOT projects.

Vendor - A supplier of project-produced material that is not the contractor.

Verification Sampling and Testing - Random sampling and testing performed to validate the quality and acceptability of materials and workmanship when contractor's test results are utilized in the acceptance decision (See **Appendix B**). Verification sampling and testing shall be performed on independent samples obtained by qualified testing personnel of the State or its designated agent, excluding the contractor and vendor.

IV. LIST OF FIGURES

NUMBER	TITLE	PAGE
Figure 1	Report of Independent Assurance Sampling and Testing (Blank Form)	13
Figure 2	Independent Assurance and Correlation Testing Allowable Variations (±)	16
Figure 3	Report of Independent Assurance Sampling and Testing (Example)	17
Figure 4	Report of Correlation Testing (Blank Form)	20
Figure 5	Report of Correlation Testing (Example)	21
Figure 6	Materials Certification Flow Chart	23
Figure 7	Sample Checklist Cover Sheet (Blank)	24
Figure 8	Sample Checklist First Page (Blank)	25
Figure 9	Sample Checklist Second Page (Blank)	26
Figure 10	Sample Checklist when Contractors Testing is Included in the Acceptance Decision	Appendix B

V. QUALITY ASSURANCE

A. CONTRACTOR TESTING

When specified by Standard Specifications or Special Provisions, the contractor is required to perform specific sampling, testing, and other related activities. The primary purpose of contractor sampling and testing is to assure the contractor that their process is in control and producing a product satisfying ADOT contractual specifications; however, If permitted by specification, contractor testing may be used in the acceptance decision **(See Appendix B)**.

Contractor sampling and testing shall be performed by qualified technicians and testing laboratories. Laboratory and technician qualification requirements are presented in the ADOT "System for the Evaluation of Testing Laboratories" (**See Appendix A**). Laboratories satisfying the ADOT "System for the Evaluation of Testing Laboratories" are listed in the ADOT "Directory of Approved Materials Testing Laboratories", issued twice a year.

The Resident Engineer has the responsibility and authority to review and approve contractor sampling and testing activities. Project personnel are also responsible for monitoring the contractor's performance and compliance with specification requirements. When requested by the Project or District, Materials Quality Assurance Section will perform an inspection of the contractor's testing laboratory in accordance with **Section VI (A)** of this manual.

B. MATERIALS ACCEPTANCE

The quality of materials and construction incorporated into ADOT construction projects are controlled by sampling and testing, and accepted based on specification compliance. Compliance with specifications is determined by acceptance sampling and testing, verification sampling and testing in the case of using the contractor's test results in the acceptance decision (**See Appendix B**), materials certification, and inspection. All materials shall be randomly sampled at prescribed frequencies as given in the Sampling Guide Schedule, **Appendix C**. Sampling and testing shall be performed by qualified laboratories and by qualified sampling and testing personnel.

Reliance should not be placed wholly on the results of sampling and testing in determining the acceptability of materials and construction work. The sampling and testing should be supplemented by sufficient visual inspection of the materials to determine whether the samples and tests are reasonably representative. In addition, there should be sufficient observation of the construction operations and processes to assure uniformly satisfactory results.

1. Acceptance Sampling and Testing

The Sampling Guide Schedule (**Appendix C**) applies to sampling frequencies only for acceptance sampling and testing. It gives the material type to be sampled, the frequency of sampling, location of samples, and testing to be performed. Acceptance samples must be obtained randomly by ADOT technicians or its designated agent.

It is the intent of the Sampling Guide Schedule to provide guidance to personnel responsible for sampling and testing materials, yet allow reasonable latitude for adapting to specific project needs. The frequency may vary for individual projects or phases of projects in accordance with job conditions, such as, the uniformity of materials at the source, the methods and equipment used, and weather conditions. The number of samples and locations from which they are taken should adequately assure or verify that the materials incorporated and construction produced are acceptable in accordance with the plans and specifications. The Engineer may direct that less acceptance sampling and testing be accomplished in particular cases he deems necessary provided concurrence from Materials Group is obtained. Conversely, the Engineer may direct that an amount of acceptance testing greater than the required minimum be done when he deems necessary.

The recommended number of acceptance samples is listed on a materials sample checklist [see **Section V(E)(1)**] issued for each project by the Quality Assurance Section. The number of samples given on the materials sample checklist is the recommended minimum derived from the project special provisions bidding schedule. For materials that are sampled on a time designated lot basis, an estimated lot quantity is used to determine the recommended number of acceptance samples.

2. Materials Certification

Acceptance of materials by "Certificate of Compliance" or "Certificate of Analysis" will be in accordance with Section 106.05 of the Standard Specifications and Section 1000 of the Materials Testing Manual.

Small quantities may be accepted on the basis of certification or based upon visual observations of the Engineer. Small quantities may be considered to be approximately 400 cubic meters (500 cubic yards) or less of processed aggregate material or approximately 18 metric tons (20 tons) of bituminous material, portland cement, or fly ash. A small quantity of portland cement concrete should be considered to be 4 cubic meters (5 cubic yards) or less. The Engineer should exercise careful judgment in the acceptance of small quantities. Considerations must include the significance of the product to the construction as well as the quantity. The recommended sizes of small quantities are to be considered approximate, not maximums.

Some materials are pre-sampled at the supplier's yard by the Regional or Central Laboratory, tested, and tagged with an ADOT green sticker containing the project number, date sampled and lab number if specification requirements are met. For materials that are green tagged, it may not be necessary to do any further sampling and testing. However, the proper laboratory should be contacted for verification of the materials acceptability.

Some materials approved for use are shown on the Department's Approved Products List. The Approved Products List is maintained by the Arizona Transportation Research Center and is available from the Engineering Records Office, 1655 West Jackson, Phoenix, Arizona, 85007, Phone (602) 255-8216. This list includes products that have been pre-tested and found acceptable for Department use.

C. INDEPENDENT ASSURANCE SAMPLING AND TESTING

The Code of Federal Regulations, Title 23 Part 637B, requires the implementation of an Independent Assurance Program. Its definition of an independent assurance program is as follows:

> *"Activities that are an unbiased and independent evaluation of all the sampling and testing procedures used in the acceptance program."*

The independent assurance program evaluates the sampling/testing personnel and testing equipment used in acceptance of materials. The Code of Federal Regulations allows obervations, split sample results, and proficiency sample results as means of evaluating testing personnel within a State's independent assurance program. Calibration checks, split sample results, and proficiency sample results are permissible inclusions to the I.A. program for evaluating acceptance testing equipment. ADOT currently evaluates laboratories' testing equipment and personnel by inspections, I.A. split samples, and proficiency samples. The independent assurance program does not directly determine the acceptability of materials.

The Regional Materials Engineers are responsible for administering the independent assurance program; they provide personnel and equipment to obtain the independent assurance samples. Communication shall be maintained between project and regional lab personnel to assure timely independent assurance sampling and testing is accomplished commensurate with project progress.

Materials requiring independent assurance sampling/testing are:

- Naturally occurring materials, such as soils and aggregates

- Mixtures containing naturally occurring materials
- Processed aggregates
- Mixtures containing processed aggregates

For the majority of construction materials produced for ADOT projects, the frequency of sampling for independent assurance remains a function of the number of samples used for acceptance on a project basis. Unless a material is represented by a very small quantity, at least one I.A. sample is required for each qualifying material type on each project.

Independent assurance samples shall be of sufficient quantity for a split to be tested by the project laboratory.

Independent Assurance testing for in-place density may consist of documented observations of the acceptance testing during routine independent assurance visits. Documentation of each observation must include, as a minimum; date of observation, a description of test location, type of density test performed, and test operator. A report of the independent assurance inspection shall be made on the "Report of Independent Assurance Sampling and Testing" form, shown in **Figure 1**, or an equivalent.

When contractor's test results are permitted by specification to be used in the acceptance decision, modifications to independent assurance sampling and tesing requirements are given in **Appendix B**.

1. Frequency of Independent Assurance Sampling and Testing

The frequency of independent assurance sampling and testing is given below.

- For asphaltic concrete <u>produced under Specifications 406, 416, or 417</u>:
  - One independent assurance bituminous mixture sample shall be taken per 5 acceptance lots. The I.A. sample shall be taken at a different location than any acceptance sample and will not be split with the laboratory performing acceptance testing. At least one I.A. bituminous mixture sample is required for each project having less than 5 acceptance lots.
  - Independent assurance sampling and testing, other than gradation, shall be performed on mineral aggregate for the bituminous mixture at the rate of one I.A. sample for every 40 acceptance samples.
  - I.A. samples for compaction (separate cores) will not be taken.

ARIZONA DEPARTMENT OF TRANSPORTATION
REPORT OF INDEPENDENT ASSURANCE SAMPLING AND TESTING

Project #: _____ Resident Engineer: _____

TRACS #: _____ Contractor: _____

Project Name: _____ District: _____

Material Type: _____ Sample Date: _____ I.A. Sample Rec'd Date: _____

Sample Location: _____ Sampled By: _____

Location of Supply: _____ I.A. Sample ID #: _____ Tested By (Lab): _____

Lot #: _____ I.A. Split ID #: _____ Tested By (Lab): _____

SPECIFICATION TEST CHARACTERISTIC													
I.A. SAMPLE TEST RESULT													
I.A. SPLIT SAMPLE TEST RESULT													
VARIATION (I.A. SAMPLE vs. I.A. SPLIT)													
ALLOWABLE VARIATION (±)													
AVERAGE OF ACCEPTANCE TEST RESULTS													
VARIATION (I.A. SAMPLE vs. ACCEPT. AVG.)													
ALLOWABLE VARIATION (±)													

Favorable Comparison Yes ____ No ____ / Test Characteristic(s): _____

Report of In-Place Density Observation:

Description of Test Location - _____

Type of Density Test Performed - _____

Date of Test and Test Operator - _____

Favorable Inspection - Yes ____ No ____ / Comments: _____

Individual Contacted and Date/Time Acceptance Lab Notified: _____

Action Taken: _____

Remarks: _____

†● 44-3928 R3/98

C: Resident Engineer
Project Lab
Materials Group (Central)

Regional Materials Engineer: _____
(Signature and Date)

Figure 1

- For portland cement concrete pavement:

  - One independent assurance concrete mixture sample for compressive strength shall be taken per 4 acceptance lots. The I.A. sample shall be taken at a different location than any acceptance sample and will not be split with the laboratory performing acceptance testing. At least one I.A. concrete mixture sample for compressive strength is required for each project having less than 4 acceptance lots.
  - Independent assurance sampling and testing, other than compressive strength, shall be performed on the concrete mixture at the rate of one I.A. sample for every 40 acceptance samples.
  - Independent assurance sampling and testing shall be performed on aggregate for the concrete mixture at the rate of one I.A. sample for every 40 acceptance samples.

- For all other materials subject to I.A. sampling and testing:

  - One I.A. sample shall be taken for every 40 acceptance samples.

2. Comparison and Reporting of Independent Assurance Sampling and Testing

Each I.A. sample will normally have an I.A. split run by the ADOT acceptance lab, with some exceptions as noted below. I.A. sample results shall be promptly compared to I.A. split sample results and to the average of acceptance test results. Due to changes in material, source of supply, or approved changes in mix designs, the average of acceptance test results shall only be determined from the particular sample population for the material they represent.

- For asphaltic concrete produced under Specifications 406, 416, or 417:

  - I.A. samples of bituminous mixture are not split to the acceptance lab; there is no comparison between I.A. and I.A. Split test results.
  - The I.A. bituminous mixture sample test result is compared to the average of acceptance tests of the lot from which it was taken.
  - Each I.A. test result for samples of mineral aggregate for the bituminous mixture, other than gradation, is compared to its I.A. split result and to the average of acceptance tests.

- For portland cement concrete pavement:

  - I.A. samples for compressive strength of the concrete mixture are not split to the acceptance lab; there is no comparison between I.A. and I.A. Split test results.
  - The I.A. compressive strength test result is compared to the average of acceptance tests of the lot from which it was taken.
  - Each I.A. test result for samples of aggregate for the concrete mixture is compared to its I.A. split result and to the average of acceptance tests.

- For all other materials subject to I.A. sampling and testing:

  - Each I.A. test result is compared to its I.A. split result and to the average of acceptance tests.

For a favorable comparison each specified test characteristic must be within the allowable variations listed in **Figure 2** for "I.A. SAMPLE vs. I.A. SPLIT" and "I.A. SAMPLE vs. AVG. OF ACCEPT".

The Regional Materials Engineer is responsible to determine allowable variations for test characteristics not listed in **Figure 2**.

Comparisons of I.A. results are documented on the "Report of Independent Assurance Sampling and Testing" form, shown in **Figure 1**, or an equivalent. An example of its use is shown is **Figure 3**. A report with unfavorable comparisons must be accompanied by documentation of an investigation and findings determining reasons for the unfavorable comparison of test results. Results of the independent assurance testing, comparisons, and findings for any unfavorable comparisons shall be communicated by the Regional Materials Engineer to the Resident Engineer/Project Lab and Materials Group within 5 working days of receiving the sample in the I.A. testing laboratory.

When Central Lab performs testing of independent assurance samples, the results will be communicated to the Regional Materials Engineer who will notify the Resident Engineer within 5 working days of receipt of the sample by Central Lab.

When an I.A. split is used as an acceptance sample, it is recorded as an acceptance test on the project Materials Sample Checklist.

INDEPENDENT ASSURANCE AND CORRELATION TESTING
ALLOWABLE VARIATIONS (±)

PORTLAND CEMENT CONCRETE		
TEST	I.A. SAMPLE VS. I.A. SPLIT	I.A SAMPLE VS. AVG. OF ACCEPT.
Coarse Aggregate Gradation		
+25.0 mm (+1")	4	8
25.0 mm (1")	4	8
19.0 mm (3/4")	4	8
12.5 mm (1/2")	4	8
9.5 mm (3/8")	4	8
6.3 mm (1/4")	4	6
4.75 mm (No. 4)	4	6
2.36 mm (No. 8)	4	4
Fine Aggregate Gradation		
4.75 mm (No. 4)	4	4
1.18 mm (No. 16)	3	4
300 µm (No. 50)	3	3
150 µm (No. 100)	3	3
75 µm (No. 200)	1.5	1.5
Air Content, percent	0.5	N/A
Slump, mm (inches)	13 (1/2")	N/A
28-Day Strength (See Notes 3 and 4 below.)	15% of specified required strength	N/A

BITUMINOUS MIXTURES		
TEST	I.A. SAMPLE VS. I.A. SPLIT	I.A SAMPLE VS. AVG. OF ACCEPT.
Mineral Aggregate Gradation		
+19.0 mm (+3/4")	4	6
19.0 mm (3/4")	4	6
12.5 mm (1/2")	4	6
9.5 mm (3/8")	4	6
4.75 mm (No. 4)	4	6
2.36 mm (No. 8)	4	6
600 µm (No. 30)	2	3
425 µm (No. 40)	2	3
75 µm (No. 200)	1.0	1.5
Percent Asphalt	0.4	0.6
Density, kg/m^3 (pcf)	32 (2.0)	40 (2.5)
Voids, percent	1.5	2.0
Marshall Stability		
Newtons	5350	6650
(Pounds Force)	(1200)	(1500)

SOILS AND AGGREGATES		
TEST	I.A. SAMPLE VS. I.A. SPLIT	I.A SAMPLE VS. AVG. OF ACCEPT.
Gradation, except for Portland Cement Concrete and Bituminous Mixtures		
+ 25.0 mm (+1")	4	6
25.0 mm (1")	4	6
19.0 mm (3/4")	4	6
12.5 mm (1/2")	4	6
9.5 mm (3/8")	4	6
6.3 mm (1/4")	4	6
4.75 mm (No. 4)	4	6
2.36 mm (No. 8)	4	6
1.18 mm (No. 16)	4	6
425 µm (No. 40)	3	5
75 µm (No. 200)	1.5	1.5
Sand Equivalent	6	9
Flakiness Index	3	5
Uncompacted Void Content	4	6
pH	0.4	N/A
Optimum Moisture, percent	1.0	N/A
Proctor Density, kg/m^3 (pcf)	32 (2.0)	N/A
Fract. Coarse Agg. Particles (See Note 4 below.)	28% of specified requirement	N/A
Plasticity Index (See Note 4 below.)	20% of specified requirement or if range, 20% of midpoint of specified range	N/A

Note 1: Use applicable test characteristics specified for material being tested.

Note 2: "I.A. SAMPLE VS. I.A. SPLIT" is to be used for correlation testing comparison.

Note 3: For concrete strength requirements given in megapascals, the allowable variation shall be based on the percentage of specified required strength expressed in kilopascals.

Note 4: Allowable variations based on a percentage of specified requirement or midpoint of specified range shall be rounded if necessary to the nearest whole number.

REGIONAL MATERIALS ENGINEER TO DETERMINE ALLOWABLE VARIATIONS FOR TEST CHARACTERISTICS NOT SHOWN ABOVE.

Figure 2

ARIZONA DEPARTMENT OF TRANSPORTATION
REPORT OF INDEPENDENT ASSURANCE SAMPLING AND TESTING

Project #: F-099-9 (9)
TRACS #: H 0999 09C
Project Name: Snow Canyon - Little Lake
Material Type: MA - 3/4" AC (416 Special Mix)
Sample Location: Cold Feed
Location of Supply: XYZ Commercial
Lot #:

Resident Engineer: Frank Bossy
Contractor: ABC Construction
District: Flagstaff
Sample Date: 12-22-99 I.A. Sample Rec'd Date: 12-23-99
Sampled By: Bob Tester
I.A. Sample ID #: 99-136 Tested By (Lab): Regional
I.A. Split ID #: 99-78 Tested By (Lab): Project

SPECIFICATION TEST CHARACTERISTIC	Sand Equiv.	Fract. Part.	Uncomp. Voids										
I.A. SAMPLE TEST RESULT	64	78	48										
I.A. SPLIT SAMPLE TEST RESULT	67	87	46										
VARIATION (I.A. SAMPLE vs. I.A. SPLIT)	3	9	2										
ALLOWABLE VARIATION (±)	6	20	4										
AVERAGE OF ACCEPTANCE TEST RESULTS	60	73	47										
VARIATION (I.A. SAMPLE vs. ACCEPT. AVG.)	4	5	1										
ALLOWABLE VARIATION (±)	9	N/A	6										

EXAMPLE

Favorable Comparison Yes ✓ No ____ / Test Characteristic(s):

Report of In-Place Density Observation:
Description of Test Location -
Type of Density Test Performed -
Date of Test and Test Operator -
Favorable Inspection - Yes ____ No ____ / Comments:

Individual Contacted and Date/Time Acceptance Lab Notified: Ted Headman 12-29-99 11:45 AM

Action Taken:

Remarks:

†● 44-3928 R3/98 C: Resident Engineer, Project Lab, Materials Group (Central)

Regional Materials Engineer: Matt Mann 12-29-99
(Signature and Date)

Figure 3

D. CORRELATION TESTING

Correlation testing is a quality assurance activity conducted to supplement independent assurance sampling and testing. Correlation testing provides a method to isolate problems that originate from sample splitting or testing error and is typically conducted between the Project Lab and Regional Lab.

Materials requiring correlation testing are:

- Naturally occurring materials, such as soils and aggregates
- Mixtures containing naturally occurring materials
- Processed aggregates
- Mixtures containing processed aggregates

When contractor's test results are permitted by specification to be used in the acceptance decision, as addressed in **Appendix B**, correlation testing will not be performed.

1. Frequency of Correlation Testing

At a prescribed frequency, a representative split of acceptance samples taken on the project is obtained for correlation testing. Correlation split samples are taken at the frequency given below. The correlation split samples shall be properly indentifed and promptly submitted to the Regional Lab for testing. The correlation split will be of sufficient size for the Regional Lab to duplicate the testing that is performed at the Project Lab.

- For asphaltic concrete <u>produced under Specifications 406, 416, or 417</u>:
  - Correlation testing is not performed on the bituminous mixture.
  - Correlation testing, other than gradation, shall be performed on mineral aggregate materials for the bituminous mixture. A correlation split shall be obtained from the first acceptance sample, and subsequent correlation testing is then performed at the frequency of one correlation sample split being obtained from every fifth acceptance sample.

- For portland cement concrete (Any Class - P, S, B, or U):

  - No correlation testing is performed on portland cement concrete mixtures.
  - Correlation testing shall be performed on the aggregate materials for the concrete mixture. A correlation split shall be obtained from the first acceptance sample, and subsequent correlation testing is then performed at the frequency of one correlation sample split being obtained from every fifth acceptance sample.

- For all other materials subject to correlation testing:

  - A correlation split shall be obtained from the first acceptance sample, and subsequent correlation testing is then performed at the frequency of one correlation sample split being obtained from every fifth acceptance sample.

2. Comparison and Reporting of Correlation Testing

The Regional Materials Engineer or his representative will compare the results of tests performed on the acceptance sample and the correlation split. An evaluation must be made regarding the comparison of this data using **Figure 2** as a reference. For a favorable comparison, each specified test characteristic must be within the allowable variation shown for "I.A. SAMPLE vs. I.A. SPLIT". If there is an unfavorable comparison, an investigation should be initiated to determine the cause of the disparity. The investigation may include an inspection of the equipment used to perform both tests, a discussion with the test operators regarding their knowledge of the procedure, or testing by exchanging samples if sufficient material is available. When the problem is isolated, the steps taken to resolve it shall be documented. The results of the correlation testing, comparisons, and the findings for any unfavorable comparisons are to be recorded on the "Report of Correlation Testing" form presented in **Figure 4**, or an equivalent form. An example of its use is given in **Figure 5**.

The Regional Materials Engineer is responsible to determine allowable variations for test characteristics not listed in **Figure 2**.

The results of the correlation testing, comparisons, and findings of any unfavorable comparsions shall be communicated by the Regional Materials Engineer to the Resident Engineer/Project Lab within five working days of receipt of the sample in the correlation testing laboratory.

ARIZONA DEPARTMENT OF TRANSPORTATION
REPORT OF CORRELATION TESTING

Project #: _____ Resident Engineer: _____

TRACS #: _____ Contractor: _____

Project Name: _____ District: _____

Material Type: _____ Sample Date: _____ Correlation Split Rec'd Date: _____

Sample Location: _____ Sampled By: _____

Location of Supply: _____ Correlation Split I.D. #: _____ Tested By (Lab): _____

Lot #: _____ Acceptance Sample I.D. #: _____ Tested By (Lab): _____

SPECIFICATION TEST CHARACTERISTIC													
CORRELATION SPLIT TEST RESULT													
ACCEPTANCE SAMPLE TEST RESULT													
VARIATION (CORRELATION vs. ACCEPTANCE)													
ALLOWABLE VARIATION (±)													

Favorable Comparison Yes ____ No ____ / Test Characteristic(s): _____

Individual Contacted and Date/Time Acceptance Lab Notified: _____

Action Taken: _____

Remarks: _____

†● 44-3927 R3/98 C: Resident Engineer
Project Lab

Regional Materials Engineer: _____
(Signature and Date)

Figure 4

ARIZONA DEPARTMENT OF TRANSPORTATION
REPORT OF CORRELATION TESTING

Project #: F-099-9 (9)
TRACS #: H 9999 09C
Project Name: SNOW CANYON - LITTLE LAKE
Material Type: AGGREGATE BASE - CLASS 3
Sample Location: WINDROW - STATION 640+00 - LIFT 1
Location of Supply: XYZ COMMERCIAL
Lot #:

Resident Engineer: FRANK BOSSY
Contractor: ABC CONSTRUCTION
District: FLAGSTAFF
Sample Date: 11-16-99 Correlation Split Rec'd Date: 11-16-99
Sampled By: JOE DOGOOD
Correlation Split I.D. #: 99-316 Tested By (Lab): REGIONAL
Acceptance Sample I.D. #: 99-239 Tested By (Lab): PROJECT

SPECIFICATION TEST CHARACTERISTIC	1"	3/4"	3/8"	#8	#200	P.I.	FRACT. PART.						
CORRELATION SPLIT TEST RESULT	100	95	75	40	3.4	1	43						
ACCEPTANCE SAMPLE TEST RESULT	100	94	71	37	2.8	NP	38						
VARIATION (CORRELATION vs. ACCEPTANCE)	0	1	4	3	0.6	1	5						
ALLOWABLE VARIATION (±)	4	4	4	4	1.5	1	8						

Favorable Comparison Yes ✓ No ____ / Test Characteristic(s):

Individual Contacted and Date/Time Acceptance Lab Notified: Ted Headman 11-19-99 2:30 pm

Action Taken:

Remarks:

EXAMPLE

†● 44-3927 R3/98 C: Resident Engineer Project Lab

Regional Materials Engineer: Matt Mann 11-19-99
(Signature and Date)

Figure 5

E. FINAL CERTIFICATION OF MATERIALS INCORPORATED IN THE WORK

The following information in this section supersedes Materials Group Policy and Procedure Directive No. 92-6. It outlines the procedure to be followed in certifying that materials incorporated in the work were in conformity with the approved plans and specifications.

A "Materials Certification Flow Chart" is given in **Figure 6**. This flow chart provides a brief illustration of the requirements given herein.

1. Materials Sample Checklist

Materials Group, Quality Assurance Section, will originate the project "Materials Sample Checklist" recommending the number of acceptance, independent assurance, and correlation samples to be taken for each material. Materials which are not listed, but are accepted by testing shall be added to the sample checklist by the project. "As-Built" quantities which are substantially different from plans quantities shall be noted on the sample checklist and the Quality Assurance Section contacted for revised sampling and testing requirements. A blank sample checklist and cover letter are given in **Figures 7 through 9**. Upon completion of each project, the sample checklist shall be completed and signed by the Resident Engineer. A copy of the completed and signed Certificate Log(s) shall be attached to the Materials Sample Checklist. These items shall be submitted to the Regional Materials Engineer for his/her review. If acceptable, the Regional Materials Engineer signs the completed Materials Sample Checklist. If necessary, the Materials Sample Checklist shall be returned to the Resident Engineer for correction.

2. Materials Records

The materials records for each project will be reviewed by the Resident Engineer. Any material represented by failing tests which has been incorporated into the work is considered an exception to the plans and specifications. Each exception, including exceptions which are covered by supplemental agreements, must be listed and explained in a separate document entitled "Materials Exception Report". The exception report shall identify the project number, the material type, tests failed and an explanation of the corrective action taken, including reference to any supplemental agreement that provided for a change in specifications and/or acceptance of the material. The exception report shall be signed by the Resident Engineer and submitted to the Regional Materials Engineer for his/her review. If necessary, it shall be returned to the Resident Engineer for correction.

MATERIALS CERTIFICATION FLOW CHART

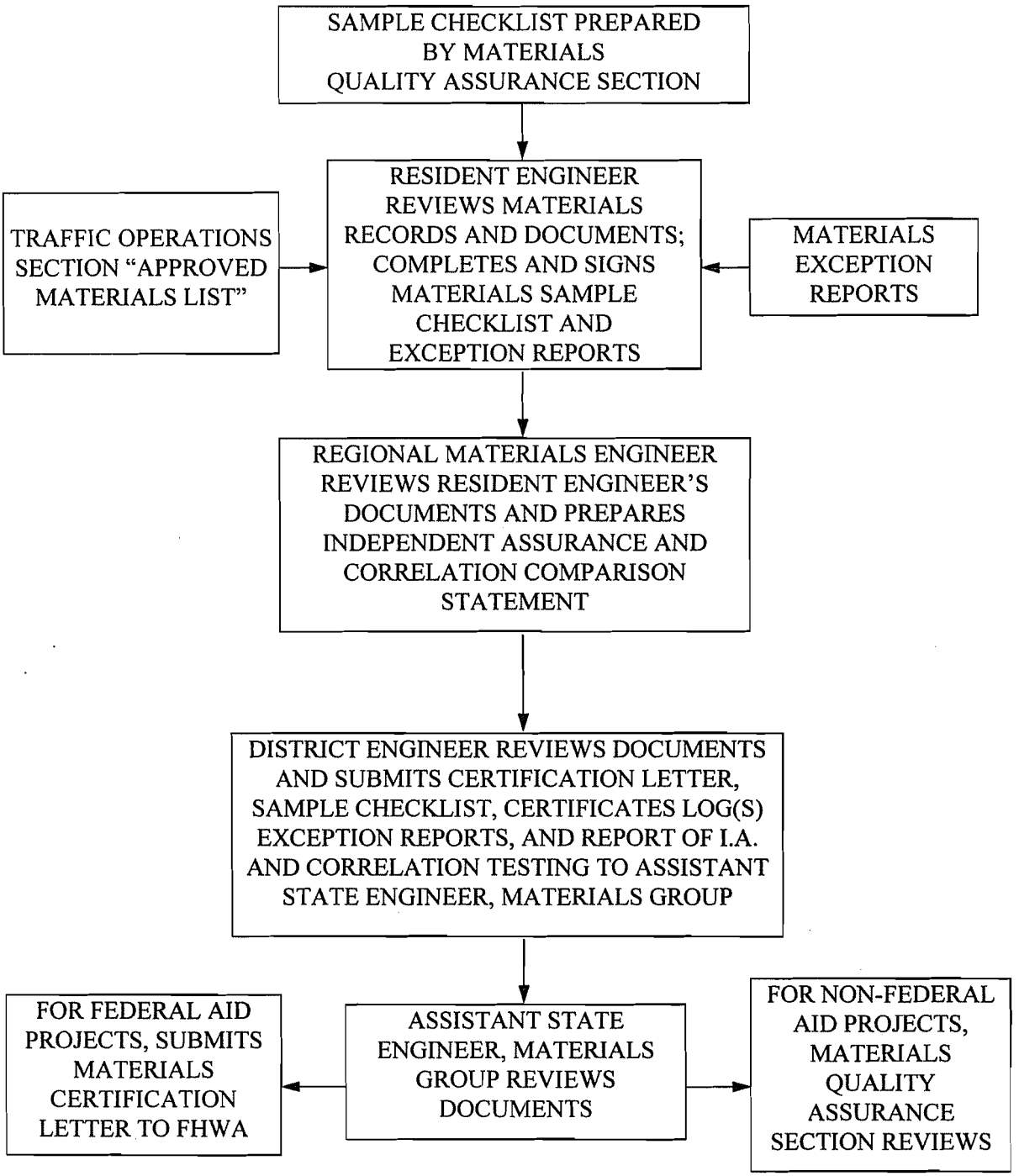

Figure 6

ARIZONA DEPARTMENT OF TRANSPORTATION

OFFICE MEMO

(Date)

TO:

FROM: **RANDOLPH J. ALLENSTEIN**
Quality Assurance Engineer
Materials Group (068-R)

RE: **PROJECT NO.**

Materials Group has prepared the following checklist of the materials to be used in constructing this project which require testing for approval. The number of recommended samples for acceptance (ACCP), independent assurance (IAS), and correlation (CORR) testing are derived from the "Materials Quality Assurance Program" (Series 900 of the Materials Testing Manual). The recommendations are considered minimum for the plan quantity. Documentation must be provided if the actual number of samples differs from that recommended. All materials used on the project which require testing should be listed. Materials used which were not originally listed should be added.

Acceptance samples taken by the project are to be recorded under the ACCP SAMPLES TAKEN BY PROJECT column, regardless of where the tests are performed. The number of samples tested shall be recorded in the appropriate column. Acceptance testing performed by the project is to be recorded under the ACCP SAMPLES TESTED BY PROJECT column, acceptance testing performed by the Regional Lab is to be recorded under the REGIONAL ACCP column, and acceptance testing performed by the Central Lab is to be recorded under the CENTRAL ACCP column. Independent assurance sample splits used for acceptance testing are to be recorded under the ACCP column for the lab performing the acceptance testing. Correlation testing performed by the Regional Lab is to be recorded in the REGIONAL CORR column. Independent assurance sample testing is to be recorded under the column for the lab performing the testing, i.e., REGIONAL IAS or CENTRAL IAS columns.

Upon completion of the project, the Materials Sample Checklist shall be signed and submitted to the Regional Materials Engineer for review and signature. A copy of the completed and signed Certificate Log(s) shall be attached to the Materials Sample Checklist. These documents shall be forwarded to the District Engineer for review and approval. The District Engineer will then forward them to the Assistant State Engineer, Materials Group.

RJA:laa

cc:
Regional Materials Engineer
Regional Lab ()

Page 1 of 3

Figure 7

ARIZONA DEPARTMENT OF TRANSPORTATION
MATERIALS SAMPLE CHECKLIST
(Date)

PROJECT LOCATION: _____ PROJECT NUMBER: _____

ITEM NUMBER	MATERIAL	PLAN QUANTITY	ACTUAL QUANTITY IF VARIES FROM PLAN QUANTITY	NUMBER OF SAMPLES				NUMBER OF SAMPLES TESTED					
				RECOMMENDED			PROJECT		REGIONAL			CENTRAL	
				ACCP	IAS	COR	ACCP SAMPLES TAKEN BY PROJECT	ACCP SAMPLES TESTED BY PROJECT	ACCP	IAS	COR	ACCP	IAS

* Small quantity, no samples required.

Figure 8

ARIZONA DEPARTMENT OF TRANSPORTATION
MATERIALS SAMPLE CHECKLIST

PROJECT NUMBER: _____

ITEM NUMBER	MATERIAL	PLAN QUANTITY	ACTUAL QUANTITY IF VARIES FROM PLAN QUANTITY	NUMBER OF SAMPLES				NUMBER OF SAMPLES TESTED					
				RECOMMENDED			PROJECT		REGIONAL			CENTRAL	
				ACCP	IAS	COR	ACCP SAMPLES TAKEN BY PROJECT	ACCP SAMPLES TESTED BY PROJECT	ACCP	IAS	COR	ACCP	IAS

* Small quantity, no samples required.

NOTE:
A. One acceptance sample per 900 Mg (1000 T). Minimum one IAS per 40 acceptance samples.
B. One acceptance sample per 75 m^3 (100 CY). Minimum one IAS per 40 acceptance samples.
C. Five samples per lot for acceptance. Minimum one IAS per 20 acceptance samples for class P concrete. Minimum one IAS per 40 acceptance samples for CTB.
D. Minimum one gradation sample per shift. Minimum one IAS per 40 acceptance samples.

Mg = megagram = metric ton

REMARKS: _____

This is to certify that all materials, except those materials accepted by certification and those where no samples are required, were properly sampled and tested.

Report prepared by _____ Date _____

Resident Engineer (Signature and Date)

Reviewed by: _____

Regional Materials Engineer (Signature and Date)

Figure 9

The Resident Engineer will assure and maintain information in the project files that all traffic engineering items installed on the project are in compliance with the contract documents and the "Approved Materials List" issued by Traffic Operations Section.

The Regional Materials Engineer is required to furnish the District Engineer with a statement concerning the adequacy of the Independent Assurance Sampling and Testing Program, and the Correlation Testing Program. This statement must address the number of independent assurance and correlation samples that were actually tested in comparison to the number of samples recommended to be obtained. In addition, the Regional Materials Engineer's statement must address the comparison of independent assurance and correlation test results to the acceptance testing. Any statement concerning the lack of favorable comparison must be supported with a reasonable explanation, including the corrective action taken.

3. Certification of Materials for Federal-Aid Projects

The completed sample checklist, certificate log(s), exception reports, and report of independent assurance and correlation testing shall be forwarded to the District Engineer.

The District Engineer will provide the Assistant State Engineer, Materials Group, with the aforementioned documents and a statement which will include as a minimum:

> "The results of the tests used in the acceptance program indicate that the materials incorporated in the construction work, and the construction operations controlled by sampling and testing, were in conformity with the approved plans and specifications.
>
> In addition, the results of independent assurance sampling and testing, and correlation testing compare favorably to the samples and tests that are used in the acceptance program."

The District Engineer's statement should also state whether exceptions to the plans and specifications were identified or not. The Assistant State Engineer, Materials Group, will review the documentation furnished by the District Engineer. Based on this documentation, the Assistant State Engineer, Materials Group, will prepare and submit the certification letter to the Federal Highway Administration.

4. Certification of Materials for Local Government Federal-Aid Projects

Materials certification for self-administered local government projects will be conducted in accordance with "Materials Sampling and Testing", pages 19 and 20 of *A Guide for Local Governments to Self-Administer Federal-Aid Projects - August 1984*, revised as follows:

(a) The local agency engineer will be responsible for sampling and testing materials in accordance with the ADOT Materials Testing Manual and the Specifications.

(b) Independent Assurance Sampling and Testing and Correlation Testing will be performed by the ADOT personnel as the work progresses.

(c) Independent Assurance and Correlation samples taken by ADOT personnel, as outlined in item (b) above do not relieve the local agency's engineer of the responsibility for sampling and testing of materials in accordance with item (a) above.

(d) At the completion of the project, the local agency engineer will furnish the completed materials sample checklist, certificate log(s), exception reports, report of independent assurance and correlation testing, and a certifcation letter for all materials incorporated in the work. These documents will be submitted to the ADOT District Engineer who will review the documentation and forward it to the Assistant State Engineer, Materials Group.

(e) Based on the documentation received from the local agency's engineer and the ADOT District Engineer, the Assistant State Engineer, Materials Group, will prepare and submit the certification letter to the Federal Highway Administration. Accompaning that certification letter will be a copy of the certification letter received from the agency engineer.

5. Certification of Materials for Non Federal-Aid Projects

A letter of certification along with the completed materials sample checklist, certificate log(s), exception reports, and report of independent assurance and correlation testing shall be submitted by the District Engineer to the Assistant State Engineer, Materials Group as required for the CERTIFICATION OF MATERIALS FOR FEDERAL-AID PROJECTS shown herein. The Materials Group, Quality Assurance Section will review the submitted documents and prepare the final materials certification and maintain the documentation on file.

VI. LABORATORY QUALIFICATIONS

The ADOT "System for the Evaluation of Testing Laboratories," given in **Appendix A**, details the requirements that laboratories must satisfy to be approved for performing testing activities for ADOT. In addition to being AASHTO certified through the AASHTO Accreditation Program, laboratories must participate in the ADOT Laboratory Inspection Program and the ADOT Proficiency Sample Program. AAP accreditation and ADOT approval must be received for all test methods that are to be performed on ADOT projects.

A. ADOT LABORATORY INSPECTION PROGRAM

The Quality Assurance Section of Materials Group administers an inspection program of all materials testing laboratories performing testing activities for the Department. Compliance to test procedures and equipment requirements are included in the inspection. All laboratories are inspected on an approximate 18-month cycle.

1. Participation

All independent, contractor, materials supplier, government, and other testing laboratories desiring to perform testing activities for ADOT must submit to an inspection as specified in the "System for the Evaluation of Testing Laboratories". The inspection considers those elements of service that the respective laboratory proposes to offer to the Department. This requirement includes laboratories submitting asphaltic concrete mix designs and those performing acceptance and referee testing for the Department.

The Quality Assurance Section will inspect only laboratories that are involved, or seeking involvement, in an activity related to the design or construction of an ADOT project.

2. Equipment Inspection

The laboratory equipment inspection will consist of checking dimensional, calibration, and specification conformance of all apparatus and equipment required by the test procedures contained in the Materials Testing Manual or other applicable specifications. Equipment related documentation, required by AASHTO R18, is also checked during this inspection. This inspection is not a calibration service for non-ADOT laboratories. Any equipment found unacceptable must be repaired, properly calibrated, or removed from service at the expense of the owner laboratory. Laboratory facilities will also be checked for compliance with applicable standards, such as, proper temperature and humidity control.

3. Procedural Inspection

The procedural inspection serves as a tool to evaluate the performance of laboratory technicians when performing tests in accordance with the ADOT Materials Testing Manual or other applicable specifications. Arizona, AASHTO, and ASTM test methods referenced in the Materials Testing Manual will be observed. In the event that Arizona Test Methods deviate from those given in a similar AASHTO or ASTM procedure, the Materials Testing Manual will govern.

4. Procedure and Report

The equipment and procedural inspections are normally conducted simultaneously; however,circumstances may dictate independent inspections. The inspection formats will generally conform to the techniques employed by AMRL and CCRL, as appropriate. When a departure from the requirements of a test method is observed by the inspectors, they will point it out to the laboratory personnel so that immediate corrections can be made if possible. The inspectors will present a summary of their findings and identify deficiencies requiring corrective action at an informal exit review where any deficiencies discovered can be discussed openly. It is requested that the Laboratory Manager and Supervising Engineer be present at the exit review.

A written inspection report will be issued by the Quality Assurance Section to the laboratory that has been inspected. The laboratory must provide the Quality Assurance Engineer with satisfactory responses to the noted deficiencies within 30 days of the report issuance. The responses must provide satisfactory evidence that all significant deficiencies were corrected or that corrective action is in progress. The laboratory's inspection and responses will be considered when evaluating ADOT eligibility.

B. ADOT PROFICIENCY SAMPLE PROGRAM

The Quality Assurance Section administers the ADOT Materials Proficiency Sample Program. The program allows participants to evaluate the reliability of their testing by comparing their test results to a population of test data generated by all participants. Specified routine tests are performed in accordance with standard Arizona and AASHTO test methods by each participating laboratory on carefully prepared samples of highway construction materials and the test results reported to ADOT for review and analysis.

1. Participation

Participation in the ADOT Proficiency Sample Program is available to all interested materials testing laboratories. Regular participation in the program is required for all laboratories performing any testing activities for the Department, as specified in the

"System for the Evaluation of Testing Laboratories". Participation by laboratories not performing testing activities for the Department is voluntary.

2. Proficiency Samples

Proficiency samples are carefully prepared to be as homogeneous as possible to minimize the effect of material variability in evaluating the results. Each sample is sequentially numbered and, using random numbers, a set of samples is allocated to each participant. To permit an estimate of single-operator precision, instructions are given for a single test operator to conduct all repetitions of an individual test method; however, it is not required that the same person conduct all test methods prescribed for a set of proficiency samples.

The program generally provides 9 to 12 proficiency samples per year. Typically, the material types and routine tests performed are:

- **Soil** - Gradation, Atterberg limits (PI), pH, resistivity, soluble salts, and moisture-density relations.
- **Fine Aggregate** - Gradation, sand equivalent, fine specific gravity, and absorption.
- **Coarse Aggregate** - Gradation, specific gravity, absorption, L.A. Abrasion, unit weight, fractured faces, and flakiness index.
- **Asphaltic Concrete** - Asphalt content, maximum theoretical specific gravity/density (Rice), Marshall stability/flow, Marshall compaction/density, gyratory compaction/density,.moisture content, and gradation of mineral aggregate.
- **Portland Cement Concrete** - 7 and 28 day compressive strengths of prepared cylinders.
- **Asphaltic Concrete Mix Design** - Immersion compression.
- **Asphalt Cement/Binder** - Rotational viscosity, pressurized aging, flash point, bending beam rheometer, direct tension, dynamic sheer rheometer.

- **Emulsified Asphalt** - Saybolt-Furol viscosity, % residue, % uncoated particles, absolute viscosity, and sieve test.

- **Reinforcing steel** - Nominal weight, yield strength, tensile strength, and % elongation.

3. Analysis/Reporting of Proficiency Sample Results

Proficiency sample test results are required to be submitted promptly upon completion of testing to the Quality Assurance Section no later than a specified date. All test data submitted is analyzed similar to the method presented in the paper: *"Statistical Evaluation of Interlaboratory Cement Tests"* by J. R. Crandall and R. L. Blaine, Volume 59 (1959) of the Proceedings of the American Society for Testing and Materials. A final report summarizing the results of the analysis is issued for each proficiency sample. The final report presents a statistical summary of results for the population of test data and a tabulation of each laboratory's individual data. Statistical characteristics presented are averages, standard deviations, coefficients of variation, z-scores, and performance ratings. The z-score is equal to the number of standard deviations the data departs from the population mean. A laboratory's performance ratings are based on the following scale:

Rating	Standard Deviations from Mean (z-score)
5	0 to ≤1.0
4	> 1.0 to ≤1.5
3	> 1.5 to ≤2.0
2	>2.0 to ≤2.5
1	>2.5 to ≤3.0
0	> 3.0; eliminated from analysis
N	No data received

All data submitted is initially reviewed and analyzed. Invalid data is eliminated, then the remaining data is reanalyzed and presented in the proficiency sample final report. A single low rating, or a pair of low ratings, is not considered significant. A continuing trend of low ratings for a test characteristic should cause a laboratory to investigate its equipment and test methodology.

The "History of Z – Scores" charts accompany each proficiency sample final report. These charts show a laboratory's performance trend for each test characteristic. In addition, scatter diagrams are included in each proficiency sample report for each test characteristic. A scatter diagram shows each laboratory's reported results as a point on the graph, relative to the population averages for that test.

Participating laboratories are required to investigate the reason for discrepancies when their results are 2 or more standard deviations from the population average values (rating of 2 and less). The laboratories must report findings and corrective actions to the Quality Assurance Section within 30 days of the final report issuance. The performance and adequacy of the laboratory's responses will be considered when evaluating the eligibility of the laboratory to conduct testing activities for ADOT.

C. CONFLICT OF INTEREST

In order to avoid a conflict of interest, any qualified laboratory shall perform only one of the following types of testing on the same project: Acceptance or verification testing, contractor testing, Independent Assurance testing, or dispute resolution (referee) testing.

VII. SAMPLING AND TESTING PERSONNEL QUALIFICATION REQUIREMENTS

Personnel supervising or performing testing activities for ADOT must meet the qualification requirements as given in the ADOT "System for the Evaluation of Testing Laboratories" (see **Appendix A**).

APPENDIX A

SYSTEM FOR THE EVALUATION OF TESTING LABORATORIES

Arizona Department of Transportation
Intermodal Transportation Division – Materials Group
1221 North 21st Avenue Phoenix, Arizona 85009-3740
Phone (602) 712-7231 FAX (602) 712-8138

Janet Napolitano
Governor

Victor M. Mendez
Director

Debra R. Brisk
Deputy Director

ADOT SYSTEM FOR THE EVALUATION OF TESTING LABORATORIES

January 6, 2004

SCOPE OF SYSTEM

The Arizona Department of Transportation (ADOT) System for the Evaluation of Testing Laboratories has been implemented to formally approve materials testing laboratories to perform sampling and testing activities for ADOT. On all projects advertised/awarded by ADOT, the materials testing laboratory must satisfy the qualification criteria as specified herein and be approved by ADOT Materials Group prior to performing materials sampling and testing activities for the Department. For Certification Acceptance projects that are advertised/awarded by a local government agency, AASHTO accreditation in applicable test methods is sufficient. Those laboratories submitting asphaltic concrete mix designs must also meet the requirements of *Materials Group Policy and Procedure Directive No. 96-6, "Asphaltic Concrete Mix Design Proposals and Submittals"*, and be approved by the Materials Group Bituminous Engineer. Approved laboratories will be periodically evaluated to verify compliance with the system. The system is administered by the ADOT Materials Group Quality Assurance Section, under authority delegated by the State Engineer. The procedure will apply to any laboratory performing sampling and testing activities for the Department, directly or as a subconsultant.

The *ADOT System for the Evaluation of Testing Laboratories* is revised periodically. The current version can be viewed on the Materials Quality Assurance Section website (http://www.dot.state.az.us/about/materials/qa/index.htm). The *ADOT System for the Evaluation of Testing Laboratories* is accessed as a selection item in either the Laboratory Inspection Program or the Proficiency Sample Program on the Materials Quality Assurance Section website.

ADOT SYSTEM CRITERIA

The ADOT system acknowledges the mechanism, established by the *AASHTO Accreditation Program (AAP)*, to recognize the competency of a laboratory to perform specific tests on construction materials. ADOT approved laboratories must obtain and maintain AASHTO accreditation for <u>any</u> AASHTO or ASTM test method specified or referenced by a contract document. In addition, AASHTO accreditation is required for any AASHTO or ASTM test method which an Arizona Test Method modifies.

Arizona Governor's Award for Quality
2001 Award Recipient

A copy of AASHTO accreditation certificates must be transmitted to the ADOT Materials Group Quality Assurance Engineer immediately upon receipt by an ADOT approved testing laboratory.

The following requirements are in addition to Section 3, "AASHTO Accreditation Program Criteria", of the *AASHTO Accreditation Program Procedures Manual*:

3.1 Quality System Criteria is modified to add the following:

The laboratory shall have and maintain the current ADOT Materials Testing Manual. The manual shall be readily accessible to all laboratory personnel.

3.2 On-Site Inspection and Quality System Evaluation Criteria is modified to add the following:

Any laboratory performing materials sampling and testing in Arizona, or within 50 miles of its borders, for ADOT projects shall be open for inspection by Arizona Department of Transportation personnel at any time. ADOT Materials Group Quality Assurance Section shall regularly schedule and conduct periodic on-site equipment and procedural inspections at all approved permanently based laboratories. The laboratory shall demonstrate the capability to perform tests according to the current ADOT Materials Testing Manual for those testing services offered under the scope of this system.

Approval will be given for those AASHTO/ASTM test methods which the laboratory has obtained AASHTO accreditation and which are successfully demonstrated during the ADOT inspection. Approval will be given for those Arizona Test Methods which modify AASHTO/ASTM methods, if the laboratory has AASHTO accreditation for the AASHTO/ASTM methods, and the Arizona Test Methods are successfully demonstrated during the ADOT inspection. Approval will also be given for unique Arizona Test Methods that are successfully demonstrated during the inspection.

A written response to any deficiencies noted during ADOT inspections shall be submitted to the ADOT Materials Group Quality Assurance Engineer within 30 days of notification. Failure to respond to noted deficiencies within the 30 day limit will be grounds for revocation of ADOT approval.

Laboratory inspections performed by ADOT Materials Group Quality Assurance Section will be conducted according to Table 1.

To perform acceptance or quality control sampling and testing on a project, a lab facility must be located within 50 miles of the project site. In addition, the lab must be completely equipped for all phases of project-related sampling and testing, as required by the contract specifications.

At least 10 days prior to any phase of construction requiring materials acceptance sampling and testing by the laboratory, the Resident Engineer shall notify the ADOT Materials Group Quality Assurance Engineer in writing to request an inspection of a portable or satellite laboratory. Portable or satellite laboratories contracted to do materials acceptance sampling and testing on ADOT projects shall be set up and available for inspection by ADOT at least 5 days prior to any phase of construction requiring materials acceptance sampling and testing by the laboratory.

As an addendum to their AAP Quality Systems Manual, each approved lab shall submit, for review and acceptance by ADOT, written policy and procedures that address the following issues:

1. How portable or satellite laboratories maintain test method and specification compliance while sampling and testing materials for ADOT projects.

2. How inspection and calibration of sampling and testing equipment at portable or satellite laboratories are performed and documented.

3. How the correlation testing program is performed between the accredited "parent" laboratory and its portable or satellite facilities.

Copies of AMRL and CCRL inspection reports and responses to any deficiencies shall be transmitted to the ADOT Materials Group Quality Assurance Engineer within 30 days of receipt of the inspection report.

Additional information regarding laboratory inspections can be found in Series 900 "Materials Quality Assurance Program" of the ADOT Materials Testing Manual, obtained from Materials Group Quality Assurance Section, or by accessing the Materials Quality Assurance Section website (http://www.dot.state.az.us/about/materials/qa/index.htm).

3.3 Proficiency Testing Criteria is modified to add the following:

The laboratory shall participate in the ADOT Proficiency Sample Program, performing at least those test methods for which ADOT approval has been granted. A written response to any deficiencies shall be submitted to the ADOT Materials Group Quality Assurance Engineer within 30 days of notification. Failure to respond to deficiencies within the 30 day limit will be grounds for revocation of ADOT approval. If a laboratory does not perform testing on 2 consecutive sets of proficiency samples of the same material type, that laboratory will be removed from the ADOT Proficiency Sample Program entirely. If that laboratory is also an ADOT approved laboratory, **it will lose ADOT approval to perform sampling and testing on ADOT projects.**

Copies of AMRL and CCRL proficiency sample test result reports and responses to deficiencies shall be mailed to the ADOT Materials Group Quality Assurance Engineer within 30 days of receipt of the final report.

Additional information regarding the ADOT Proficiency Sample Program can be found in Series 900 "Materials Quality Assurance Program" of the ADOT Materials Testing Manual, obtained from Materials Group Quality Assurance Section, or by accessing the Materials Quality Assurance Section website (http://www.dot.state.az.us/about/materials/qa/index.htm).

3.4 Personnel Qualification Criteria is modified to add the following:

An individual who is **responsible for supervising sampling and testing** shall meet the requirements given in Table 2 for the appropriate field in which sampling and testing is being performed.

Individuals who **perform actual sampling and testing** shall meet the requirements given in Table 3 for the appropriate field in which sampling and testing is being performed, and shall be supervised by an individual who meets the requirements of Table 2 for the appropriate field in which sampling and testing is being performed.

TABLE 1

LABORATORY INSPECTION REQUIREMENTS

TYPE OF LAB	Evaluate personnel, Quality Systems Manual, etc.	Inspect methods & equipment on a regular schedule or as needed	Approve via Acceptance Letter	Include in ADOT Directory of Approved Testing Labs	Performing acceptance sampling and testing for ADOT: **INSPECT PER PROJECT**	Performing quality control sampling and testing for Contractor: **INSPECT PER PROJECT**
All ADOT Labs Statewide	X	X	X			
AASHTO Accredited Independent Labs within Arizona* which are ADOT approved	X	X	X	X		
Satellite Labs** within Arizona* of an ADOT Approved Lab		X			X	AS REQUESTED BY THE RESIDENT ENGINEER
Satellite Labs** within Arizona* of an out-of-state AASHTO accredited independent Lab which is not ADOT Approved	X	X	X		X	X
Portable Labs*** within Arizona* of an ADOT Approved Lab					X	AS REQUESTED BY THE RESIDENT ENGINEER

* Operating within Arizona, or within 50 miles of Arizona borders.

** Any permanently based lab facility operating under the authority, and AASHTO accreditation of, a main laboratory facility ("parent" lab).

*** Portable lab facility operating under the authority, and AASHTO accreditation of, a main laboratory facility ("parent" lab).

TABLE 2

REQUIREMENTS FOR SAMPLING AND TESTING SUPERVISOR

Soils and Aggregate	
Field	Laboratory
Arizona Technical Institute (ATI) "Field" certification plus one of (a) through (g) below.	Arizona Technical Institute (ATI) "Laboratory Soils/Aggregate" certification plus one of (a) through (g) below.
Asphaltic Concrete	
Field	Laboratory
Arizona Technical Institute (ATI) "Field" certification plus one of (a) through (g) below.	Arizona Technical Institute (ATI) "Asphalt" certification plus one of (a) through (g) below.
Concrete	
Field	Laboratory
American Concrete Institute (ACI) "Concrete Field Testing Technician Grade I" certification plus one of (a) through (g) below.	American Concrete Institute (ACI) "Concrete Strength Testing Technician" certification plus one of (a) through (g) below.

(a) Professional Engineer, registered in the State of Arizona, with one year of highway materials sampling and testing experience acceptable to the Department.

(b) Engineer-In-Training, certified by the State of Arizona, with two years of highway materials sampling and testing experience acceptable to the Department.

(c) Obtained a Bachelor of Science Degree in Civil Engineering, Civil Engineering Technology, Construction, or related field acceptable to the Department; and with three years of highway materials sampling and testing experience acceptable to the Department.

(d) Certified by the National Institute for Certification in Engineering Technologies (NICET) in the Construction Materials Testing field as an Engineering Technician (Level III) or higher in the appropriate subfield in which sampling and testing is being performed.

(e) Certified by NICET in the Transportation Engineering Technology field as an Engineering Technician (Level III) or higher in the Highway Materials subfield.

(f) Certified by NICET as an Engineering Technician, or higher, in Civil Engineering Technology with five years of highway materials sampling and testing experience acceptable to the Department.

(g) An individual with eight years of highway materials sampling and testing, and construction, experience acceptable to the Department.

TABLE 3 **REQUIREMENTS FOR SAMPLING AND TESTING TECHNICIAN**	
Soils and Aggregate	
Field	Laboratory
Arizona Technical Institute (ATI) "Field" certification.	Arizona Technical Institute (ATI) "Laboratory Soils/Aggregate" certification.
Asphaltic Concrete	
Field	Laboratory
Arizona Technical Institute (ATI) "Field" certification.	Arizona Technical Institute (ATI) "Asphalt" certification.
Concrete	
Field	Laboratory
American Concrete Institute (ACI) "Concrete Field Testing Technician Grade I" certification.	American Concrete Institute (ACI) "Concrete Strength Testing Technician" certification.

Additional information regarding certification requirements can be obtained from ADOT Materials Group Quality Assurance Section, or by accessing the Materials Quality Assurance Section website (http://www.dot.state.az.us/about/materials/qa/index.htm).

3.5 Additional General Criteria is modified to add the following:

Copies of a laboratory's notification to or from AASHTO of any major change in its quality system, capability to perform tests for which it is accredited, laboratory ownership, location (for permanent facilities), managerial personnel, facilities, and any other change which may affect the scope of its accreditation shall be transmitted to the ADOT Materials Group Quality Assurance Engineer within 30 days of when the change occurs.

The ADOT Materials Group Quality Assurance Engineer must be notified within 30 days of changes in supervisory and key technical personnel.

To be eligible to perform referee testing on ADOT projects as an independent testing laboratory, the laboratory must provide proof to the Department of their independent status by submitting a letter to the ADOT Materials Group Quality Assurance Engineer indicating all individuals and corporations which have ownership of the laboratory. In addition, the letter must indicate that each of the owners of the laboratory is devoid of any ownership in contracting firms or materials suppliers who perform work for the Department.

James P. Delton
Acting Assistant State Engineer
Materials Group

APPENDIX B

CONTRACTOR TESTING INCLUDED IN THE ACCEPTANCE DECISION

CONTRACTOR TESTING INCLUDED IN THE ACCEPTANCE DECISION

1. Verification Sampling and Testing

If contractor test results are allowed by specification to be used in the acceptance decision, verification sampling and testing must be conducted to validate the quality and acceptability of the materials and workmanship. Contractor's sampling and testing used in the acceptance decision must also be evaluated by the independent assurance sampling and testing program.

Each verification sample shall be randomly and independently obtained at a ratio of one verification sample per five contractor samples used in the acceptance decision. One split of the verification sample shall be tested by the contractor's lab, and another split set aside for referee purposes. The test results for the verification sample are compared to the contractor's test results for the corresponding split.

If the contractor's test results for the verification sample split and the verification test results are within limits as established in the project specifications, then the contractor's test results and verification sample split results since the previous verification sample are used to determine the acceptability of the material.

If the contractor's test results for the verification sample split do not compare favorably with the verification test results, cooperative efforts by the Department and the contractor to identify the source of discrepancy should commence immediately. The efforts should include a check of test data, calculations and results; retest of samples; exchange of samples; and observation of each other's techniques. If the lab performing the verification testing was at fault, then the contractor's test results and verification sample split results since the previous verification sample are used to determine the acceptability of the material. If the contractor's lab was at fault, only the verification sample result is used to determine the acceptability of the material since the previous verification sample. During resolution of unfavorable test results between the verification sample and the contractor's split, the contractor continues sampling and testing for use in the acceptance decision, and verification sampling and testing continues at established intervals.

If the source of discrepancy between the contractor testing and the verification testing cannot be resolved, testing of referee split samples shall be performed in an independent, approved laboratory designated by the Engineer. The testing of the referee sample will be performed by the independent testing laboratory without

knowledge of the specific project, contractor, or specification target values. The results of referee testing will be binding on both the contractor and the Department, and will solely determine the acceptability of the material represented by that referee testing.

2. Independent Assurance Sampling and Testing

On projects which allow the use of contractor's testing in the acceptance decision, independent assurance sampling and testing shall be performed with the following modifications.

Independent assurance samples shall be of sufficient quantity for a split to be tested by the contractor's laboratory and a split to be tested by the laboratory performing verification testing.

a. Frequency

The frequency of independent assurance sampling and testing is given below.

- For asphaltic concrete <u>produced under Specifications 406, 416, or 417</u>:
  - Currently, the use of contractor's test results is not allowed for asphaltic concrete produced under Specifications 406, 416, or 417.
- For <u>portland cement concrete pavement</u>:
  - Currently, the use of contractor's test results for compressive strength is not allowed for portland cement concrete pavement. I.A. sampling and testing for compressive strength will be accomplished in the same manner as specified for projects on which contractor testing is not included in the acceptance decision.
  - For test characteristics of the aggregate materials and the concrete mixture, other than compressive strength, which are subject to I.A. sampling and tesing; one I.A. sample for every 40 contractor's samples used in the acceptance decision, and one verification sample for every five contractor's samples used in the acceptance decision shall be required.
- For <u>all other materials</u> subject to I.A. sampling and testing:
  - One I.A. sample for every 40 contractor's samples used in the acceptance decision, and one verification sample for every five contractor's samples used in the acceptance decision shall be required.

b. Comparison and Reporting

When the contractor's testing is included in the acceptance decision, each I.A. sample will have two splits: one split will be run at the contractor's laboratory and one split will be run at the laboratory performing the verification testing. I.A. test results will be compared to each of the two sets of corresponding I.A. split results. I.A. results are also compared to the average of the contractor's test results used in the acceptance decision.

For a favorable comparison to each I.A. split test result, each specified test characteristic must be within the allowable variations listed in **Figure 2** for "I.A. SAMPLE vs. I.A. SPLIT". For a favorable comparison to the average of the contractor's test results, each specified test characteristic must be within the allowable variations listed in **Figure 2** for "I.A. SAMPLE vs. AVG. OF ACCEPT".

If a contractor's I.A. split result is included in the acceptance decision, it is recorded on the Materials Sample Checklist (see information below for **Modified Materials Sample Checklist**) as an acceptance sample tested at the contractor's laboratory. If an I.A. split result from the laboratory performing the verification testing is used as a verification sample, it is recorded as a verification sample tested at the ADOT project laboratory.

3. Modified Materials Sample Checklist

On projects which allow the use of contractor's testing in the acceptance decision, the Materials Sample Checklist will be modified to accommodate the recording of required information. An example of a modified Materials Sample Checklist is given in **Figure 10**.

ARIZONA DEPARTMENT OF TRANSPORTATION
MATERIALS SAMPLE CHECKLIST
(Contractor's Testing Included in Acceptance Decision)

PROJECT LOCATION: PROJECT NUMBER:

ITEM NUMBER	MATERIAL	PLAN QUANTITY	ACTUAL QUANTITY IF VARIES FROM PLAN QUANTITY	SAMPLES														
				MIN # RECOMMENDED				TAKEN				TESTED AT						
												CONTR.	ADOT PROJ. LAB		ADOT REG. LAB		ADOT CENT. LAB	
				CONTRACTOR Acceptance	ADOT Verification	ADOT Acceptance	ADOT LA.S.	CONTRACTOR Acceptance	ADOT Verification	ADOT Acceptance	ADOT LA.S.	Acceptance	Verification	Acceptance	LA.S	Acceptance	LA.S	Acceptance

* Small quantity, no samples required.

Page ___ of _

Figure 10

APPENDIX C

SAMPLING GUIDE SCHEDULE

TABLE 1
ACCEPTANCE SAMPLING GUIDE FOR SOILS

SPECIFI-CATION SECTION	MATERIAL CODE, NAME AND TYPES	TYPE OF TEST(S) REQUIRED	SAMPLING POINT	MINIMUM SAMPLING FREQUENCY
203	BO Borrow within 1 m (3 ft.) of finished subgrade elevation	Gradation*	In-Place	One per 450 m (1500 ft).
		PI*		
203	EM Embankment	Proctor Density*	In-Place	One per soil type.
		Optimum Moisture*		
		Compaction*	In-Place	One per 450 m (1500 ft) per lift.
	Embankment for Metal Pile Location only	pH	In-Place or Source	One per source.
		Resistivity		
203	NG Natural Ground for Embankment <1.5 m (5 ft.)	Proctor Density*	In-Place	One per soil type.
		Optimum Moisture*		
		Compaction*	In-Place	One per 450 m (1500 ft).

* Independent Assurance Sampling and Testing required.

TABLE 1 (continued)
ACCEPTANCE SAMPLING GUIDE FOR SOILS

SPECIFI-CATION SECTION	MATERIAL CODE, NAME AND TYPES	TYPE OF TEST(S) REQUIRED	SAMPLING POINT	MINIMUM SAMPLING FREQUENCY
203	SG Subgrade	Proctor Density*	Roadway	One per soil type.
		Optimum Moisture*		
		Compaction*	Roadway	One per 450 m (1500 ft).
		Gradation*	Roadway	One per 450 m (1500 ft). or change in material.
		PI*		
203	Soil for Shoulder Build-up	Gradation	In-Place or Source	One per soil type.
		PI		
		pH		
		Soluble Salts		
		Compaction *	In-Place	One per 450 m (1500 ft) or as directed by the Engineer.
501	TB Trench Backfill	Proctor Density*	In-Place	One per soil type.
		Optimum Moisture*		
		Compaction*	In-Place	One per 450 m (1500 ft) per lift, minimum one per lift per structure or pipe.

* Independent Assurance Sampling and Testing required.

TABLE 1 (continued)
ACCEPTANCE SAMPLING GUIDE FOR SOILS

SPECIFI-CATION SECTION	MATERIAL CODE, NAME AND TYPES	TYPE OF TEST(S) REQUIRED	SAMPLING POINT	MINIMUM SAMPLING FREQUENCY
803	GM Granite Mulch or Decomposed Granite	Gradation*	In-Place or Source	One per 7500 m^3 (10,000 CY).
804	TS Top Soil	Gradation*	In-place	Written soil analysis per source and six samples per lot [a lot is considered approximately 15 000 m^3 (20,000 CY) per source].
		PI*		
		pH*		
		Soluble Salts		
		Calcium Carbonate		
		Exchange-able Sodium in percent and parts per million		

* Independent Assurance Sampling and Testing required.

TABLE 2
ACCEPTANCE SAMPLING GUIDE FOR AGGREGATES

SPECIFICATION SECTION	MATERIAL CODE, NAME AND TYPES	TYPE OF TEST(S) REQUIRED	SAMPLING POINT	MINIMUM SAMPLING FREQUENCY
203 501 (When Contractor Quality Control **is not** specified.)	SB or PB Structure Backfill or Pipe Backfill	Proctor Density*	Stockpile	One per source.
		Optimum Moisture*		
		Compaction*	In-Place	One every 150 m^3 (200 CY), minimum one per lift.
		Resistivity	Source or Stockpile	One per source.
		pH		
		Gradation*	On Job Site	One per 400 m^3 (500 CY) per source.
		PI*		
203 501 (When Contractor Quality Control **is** specified.)	SB or PB Structure Backfill or Pipe Backfill	Proctor Density*	Stockpile	One per source.
		Optimum Moisture*		
		Compaction*	In-Place	One every 400 m^3 (500 CY), minimum one per lift.
		Resistivity	Source or Stockpile	One per source.
		pH		
		Gradation*	On Job Site	One per 1150 m^3 (1500 CY) per source.
		PI*		

* Independent Assurance Sampling and Testing required.

TABLE 2 (continued)
ACCEPTANCE SAMPLING GUIDE FOR AGGREGATES

SPECIFI-CATION SECTION	MATERIAL CODE, NAME AND TYPES	TYPE OF TEST(S) REQUIRED	SAMPLING POINT	MINIMUM SAMPLING FREQUENCY
303	AB Aggregate Base 1,2,3	Abrasion #	Source	One per source.
(When Contractor Quality Control **is not** specified.)		Proctor Density*	Crusher Belt or Stockpile	At start of production, then as material changes.
		Optimum Moisture*		
		Compaction*	Roadway	One per lift per 300 m (1000 ft).
		Fractured Coarse Aggregate Particles*	Stockpile	One per 9000 metric tons (10,000 T).
		Gradation*	Windrow	One per 1800 metric tons (2000 T), minimum one per shift.
		PI*		

Provided Materials Group concurs, historical abrasion values may be used.
* Independent Assurance Sampling and Testing required.

TABLE 2 (continued)
ACCEPTANCE SAMPLING GUIDE FOR AGGREGATES

SPECIFI-CATION SECTION	MATERIAL CODE, NAME AND TYPES	TYPE OF TEST(S) REQUIRED	SAMPLING POINT	MINIMUM SAMPLING FREQUENCY
303 (When Contractor Quality Control **is** specified.)	AB Aggregate Base 1,2,3	Abrasion #	Source	One per source.
		Proctor Density*	Crusher Belt or Stockpile	At start of production, then as material changes.
		Optimum Moisture*		
		Compaction*	Roadway	One per lift per 450 m (1500 ft).
		Fractured Coarse Aggregate Particles*	Stockpile	One per 9000 metric tons (10,000 T).
		Gradation*	Windrow	One per 1800 metric tons (2000 T), minimum one per shift.
		PI*		

Provided Materials Group concurs, historical abrasion values may be used.
* Independent Assurance Sampling and Testing required.

TABLE 2 (continued)
ACCEPTANCE SAMPLING GUIDE FOR AGGREGATES

SPECIFICATION SECTION	MATERIAL CODE, NAME AND TYPES	TYPE OF TEST(S) REQUIRED	SAMPLING POINT	MINIMUM SAMPLING FREQUENCY
303 (When Contractor Quality Control **is not** specified.)	AS Aggregate Subbase 4,5,6	Proctor Density*	Crusher Belt or Stockpile	At start of production, then as material changes.
		Optimum Moisture*		
		Compaction*	Roadway	One per lift per 300 m (1000 ft).
	4	Fractured Coarse Aggregate Particles*	Stockpile	One per 9000 metric tons (10,000 T).
		Gradation*	Windrow	One per 1800 metric tons (2000 T), minimum one per shift.
		PI*		
		Abrasion #	Source	One per source.
	5,6	Gradation*	Windrow	One per 1800 metric ton (2000 T), minimum one per shift.
		PI*		

Provided Materials Group concurs, historical abrasion values may be used.
* Independent Assurance Sampling and Testing required.

TABLE 2 (continued)
ACCEPTANCE SAMPLING GUIDE FOR AGGREGATES

SPECIFI-CATION SECTION	MATERIAL CODE, NAME AND TYPES	TYPE OF TEST(S) REQUIRED	SAMPLING POINT	MINIMUM SAMPLING FREQUENCY
303 (When Contractor Quality Control **is** specified.)	AS Aggregate Subbase 4,5,6	Proctor Density*	Crusher Belt or Stockpile	At start of production, then as material changes.
		Optimum Moisture*		
		Compaction*	Roadway	One per lift per 450 m (1500 ft).
	4	Fractured Coarse Aggregate Particles*	Stockpile	One per 9000 metric tons (10,000 T).
		Gradation*	Windrow	One per 1800 metric tons (2000 T), minimum one per shift.
		PI*		
		Abrasion #	Source	One per source.
	5,6	Gradation*	Windrow	One per 1800 metric ton (2000 T), minimum one per shift.
		PI*		

Provided Materials Group concurs, historical abrasion values may be used.
* Independent Assurance Sampling and Testing required.

TABLE 2 (continued)
ACCEPTANCE SAMPLING GUIDE FOR AGGREGATES

SPECIFI-CATION SECTION	MATERIAL CODE, NAME AND TYPES	TYPE OF TEST(S) REQUIRED	SAMPLING POINT	MINIMUM SAMPLING FREQUENCY
303 304 305	AG Aggregate for CB (Cement Treated Base) or LC (Lean Concrete Base)	Gradation*	Stockpile	One per 1800 metric tons (2000 T), minimum one per shift.
		Fractured Coarse Aggregate Particles*	Stockpile	One per 9000 metric tons (10,000 T).
		Abrasion #	Source	One per source.
	for CB	PI*	Stockpile	One per 1800 metric tons (2000 T), minimum one per shift.
	for LC	Sand Equivalent*	Stockpile	One every other day of LC production.

Provided Materials Group concurs, historical abrasion values may be used.
* Independent Assurance Sampling and Testing required.

TABLE 2 (continued)
ACCEPTANCE SAMPLING GUIDE FOR AGGREGATES

SPECIFI-CATION SECTION	MATERIAL CODE, NAME AND TYPES	TYPE OF TEST(S) REQUIRED	SAMPLING POINT	MINIMUM SAMPLING FREQUENCY
404	CM Cover Material	Abrasion #	Source or Stockpile	One per source.
		Fractured Coarse Aggregate Particles	Stockpile	One per source.
		Flakiness Index		
		Bulk O.D. Specific Gravity		
		Percent Carbonates		
		Dry Unit Weight		
		Gradation*	Final Stockpile	One per 250 metric tons (300 T).
		Moisture Content*	Trucks at Scale	One per 175 metric tons (200 T).
404 412	BL Blotter Material	Gradation*	Final Stockpile	One per stockpile.

Provided Materials Group concurs, historical abrasion values may be used.
* Independent Assurance Sampling and Testing required.

TABLE 2 (continued)
ACCEPTANCE SAMPLING GUIDE FOR AGGREGATES

SPECIFI-CATION SECTION	MATERIAL CODE, NAME AND TYPES	TYPE OF TEST(S) REQUIRED	SAMPLING POINT	MINIMUM SAMPLING FREQUENCY
405	AG Aggregate for RM (Road Mix)	Moisture Content*	Roadway	One sample every 150 m (500 ft).
		Gradation*	Roadway	One per 900 metric tons (1000 T).
406	MA Mineral Aggregate for AC	Abrasion #	Source or Stockpile	One per source.
		Sand Equivalent	Stockpile	One prior to start of AC production.
		Fractured Coarse Aggregate Particles		
		Uncompacted Void Content		
		Sand Equivalent*	Stockpile or Cold Feed	One per each two days of AC production, minimum of two per project.
		Fractured Coarse Aggregate Particles*		
		Uncompacted Void Content*		
		Gradation		[See Bituminous Mixture requirements for Asphaltic Concrete on Page 37.]

Provided Materials Group concurs, historical abrasion values may be used.
* Independent Assurance Sampling and Testing required.

TABLE 2 (continued)
ACCEPTANCE SAMPLING GUIDE FOR AGGREGATES

SPECIFI-CATION SECTION	MATERIAL CODE, NAME AND TYPES	TYPE OF TEST(S) REQUIRED	SAMPLING POINT	MINIMUM SAMPLING FREQUENCY
407	MA Mineral Aggregate for FC	Abrasion #	Source or Stockpile	One per source.
		Percent Carbonates		
		Specific Gravity		
		Sand Equivalent*	Stockpile or Cold Feed	One per each two days of ACFC production, minimum of two per project.
		Flakiness Index*		
		Fractured Coarse Aggregate Particles*		
		Gradation*	Cold Feed or Hot Bins	One per 450 metric tons (500 T) of ACFC production, minimum of one per shift.

Provided Materials Group concurs, historical abrasion values may be used.
* Independent Assurance Sampling and Testing required.

TABLE 2 (continued)
ACCEPTANCE SAMPLING GUIDE FOR AGGREGATES

SPECIFI-CATION SECTION	MATERIAL CODE, NAME AND TYPES	TYPE OF TEST(S) REQUIRED	SAMPLING POINT	MINIMUM SAMPLING FREQUENCY
408	MA Mineral Aggregate for RC (Recycled Asphaltic Concrete)	Abrasion #	Source or Stockpile	One per source.
		Gradation of Individual Mineral Aggregate Stockpiles*	Stockpile	One from each stockpile for each day of MA production, or if stockpiles are already made, one per each two days of RC production with a minimum of two per project.
		Gradation of Combined Mineral Aggregate*	Cold Feed or Hot Bins	One per 900 metric tons (1000 tons) of RC production, minimum of one per shift.
		Fractured Coarse Aggregate Particles*	Stockpile (Samples composited to specified percent-ages)	One from each stockpile for each day of MA production.
		Sand Equivalent*		
			Stockpile (Samples composited to specified percent-ages) or Cold Feed	If stockpiles are already made, one per each two days of RC production with a minimum of two per project.
	Salvaged Pavement	Gradation of Individual Stockpiles*	Stockpile	One per each stockpile per each day of salvaged stockpile production.

Provided Materials Group concurs, historical abrasion values may be used.
* Independent Assurance Sampling and Testing required.

TABLE 2 (continued)
ACCEPTANCE SAMPLING GUIDE FOR AGGREGATES

SPECIFI-CATION SECTION	MATERIAL CODE, NAME AND TYPES	TYPE OF TEST(S) REQUIRED	SAMPLING POINT	MINIMUM SAMPLING FREQUENCY
409	MA Mineral Aggregate for AC - Miscellaneous Structural	Abrasion #	Source or Stockpile	One per source.
		Sand Equivalent	Stockpile	One per source.
		Gradation	Cold Feed or Hot Bins	At discretion of the Engineer.
		Uncompacted Void Content **(Special Mix only)**	Stockpile	One prior to start of AC production.
		Fractured Coarse Aggregate Particles **(When <u>not</u> Special Mix)**	Stockpile	One per source.
		Fractured Coarse Aggregate Particles* **(Special Mix only)**	Stockpile or Cold Feed	One per each two days of AC production, minimum of two per project.

Provided Materials Group concurs, historical abrasion values may be used.
* Independent Assurance Sampling and Testing required.

TABLE 2 (continued)
ACCEPTANCE SAMPLING GUIDE FOR AGGREGATES

SPECIFI-CATION SECTION	MATERIAL CODE, NAME AND TYPES	TYPE OF TEST(S) REQUIRED	SAMPLING POINT	MINIMUM SAMPLING FREQUENCY
411	MA Mineral Aggregate for FC - Miscellaneous	Abrasion #	Source or Stockpile	One per source.
		Sand Equivalent,	Stockpile	One per source.
		Flakiness Index		
		Fractured Coarse Aggregate Particles		
		Gradation	Cold Feed or Hot Bins	At the discretion of the Engineer.
413	MA Mineral Aggregate for RD (Asphalt-Rubber AC)	Abrasion #	Source or Stockpile	One per source.
		Specific Gravity	Stockpile	One per source.
		Sand Equivalent*	Stockpile or Cold Feed	One per each two days of AC production, minimum of two per project.
		Fractured Coarse Aggregate Particles*		
		Gradation*	Cold Feed or Hot Bins	One per 450 metric tons (500 T) of AC production, minimum of one per shift.

Provided Materials Group concurs, historical abrasion values may be used.
* Independent Assurance Sampling and Testing required.

TABLE 2 (continued)
ACCEPTANCE SAMPLING GUIDE FOR AGGREGATES

SPECIFI-CATION SECTION	MATERIAL CODE, NAME AND TYPES	TYPE OF TEST(S) REQUIRED	SAMPLING POINT	MINIMUM SAMPLING FREQUENCY
414	MA Mineral Aggregate for RF (Asphalt-Rubber ACFC)	Abrasion #	Source or Stockpile	One per source.
		Specific Gravity	Stockpile	One per source.
		Percent Carbonates		
		Sand Equivalent*	Stockpile or Cold Feed	One per each two days of AC production, minimum of two per project.
		Fractured Coarse Aggregate Particles*		
		Flakiness Index*		
		Gradation*	Cold Feed or Hot Bins	One per 450 metric tons (500 T) of ACFC production, minimum of one per shift.

Provided Materials Group concurs, historical abrasion values may be used.
* Independent Assurance Sampling and Testing required.

TABLE 2 (continued)
ACCEPTANCE SAMPLING GUIDE FOR AGGREGATES

SPECIFI-CATION SECTION	MATERIAL CODE, NAME AND TYPES	TYPE OF TEST(S) REQUIRED	SAMPLING POINT	MINIMUM SAMPLING FREQUENCY
416	MA Mineral Aggregate for AC-End Product	Abrasion #	Source or Stockpile	One per source.
		Sand Equivalent	Stockpile	One prior to start of AC production.
		Fractured Coarse Aggregate Particles		
		Sand Equivalent*	Stockpile or Cold Feed	One per each two days of AC production, minimum of two per project.
		Fractured Coarse Aggregate Particles*		
		Gradation		[See Bituminous Mixture requirements for Asphaltic Concrete-End Product on Page 40.]
		Uncompacted Void Content* **(Special Mix only)**	Stockpile	One prior to start of AC production.
			Stockpile or Cold Feed	One per each two days of AC production, minimum of two per project.

Provided Materials Group concurs, historical abrasion values may be used.
* Independent Assurance Sampling and Testing required.

TABLE 2 (continued)
ACCEPTANCE SAMPLING GUIDE FOR AGGREGATES

SPECIFI-CATION SECTION	MATERIAL CODE, NAME AND TYPES	TYPE OF TEST(S) REQUIRED	SAMPLING POINT	MINIMUM SAMPLING FREQUENCY
417	MA Mineral Aggregate for AC-End Product (SHRP)	Abrasion #	Source or Stockpile	One per source.
		Sand Equivalent	Stockpile	One prior to start of AC production.
		Fractured Coarse Aggregate Particles		
		Uncompacted Void Content		
		Sand Equivalent*	Stockpile or Cold Feed	One per each two days of AC production, minimum of two per project.
		Fractured Coarse Aggregate Particles*		
		Uncompacted Void Content*		
		Gradation		[See Bituminous Mixture requirements for Asphaltic Concrete-End Product (SHRP) on Page 41.]

Provided Materials Group concurs, historical abrasion values may be used.
* Independent Assurance Sampling and Testing required.

TABLE 2 (continued)
ACCEPTANCE SAMPLING GUIDE FOR AGGREGATES

SPECIFI-CATION SECTION	MATERIAL CODE, NAME AND TYPES	TYPE OF TEST(S) REQUIRED	SAMPLING POINT	MINIMUM SAMPLING FREQUENCY
Refer to Special Provisions	MA Mineral Aggregate for AC - Miscellaneous Paving	Abrasion #	Source or Stockpile	One per source.
		Sand Equivalent	Stockpile	One per source.
		Gradation	Cold Feed or Hot Bins	At discretion of the Engineer.
501	BM Bedding Material for Pipe	Gradation*	Source or Stockpile	One per 225 m^3 (300 CY) per source.
		PI*		
		pH*		
		Resistivity*		
		Proctor Density*	Source or Stockpile	One per source.
		Optimum Moisture*		
		Compaction*	In-Place	One every 40 m^3 (50 CY).
501	Filter Material for Perforated Pipe	Gradation*	Source or Stockpile	One per 225 m^3 (300 CY) per source.

Provided Materials Group concurs, historical abrasion values may be used.
* Independent Assurance Sampling and Testing required.

TABLE 2 (continued) ACCEPTANCE SAMPLING GUIDE FOR AGGREGATES				
SPECIFI-CATION SECTION	MATERIAL CODE, NAME AND TYPES	TYPE OF TEST(S) REQUIRED	SAMPLING POINT	MINIMUM SAMPLING FREQUENCY
501	Plating Material for Pipe Ends	Gradation	Source or Stockpile	One per source.
		PI		
		Proctor Density		
		Optimum Moisture		
		Compaction	In-Place	One every 40 m^3 (50 CY).
808	BM Bedding Material for PVC Irrigation Pipe	Gradation	Source or Stockpile	One per source.
913	RK Rock for Wire Tied Gabions, Riprap, (Slope Mattress)	Specific Gravity	Source	One per source.
		Gradation (visual)	Project	One per 1/2 shift.
	for Grouted Riprap, Dumped Riprap, Rail Bank Protection	Specific Gravity	Source	One per source.
		Gradation and other requirements see Special Provisions.	Project	One per 1/2 shift.

TABLE 2 (continued)
ACCEPTANCE SAMPLING GUIDE FOR AGGREGATES

SPECIFI-CATION SECTION	MATERIAL CODE, NAME AND TYPES	TYPE OF TEST(S) REQUIRED	SAMPLING POINT	MINIMUM SAMPLING FREQUENCY
1006	CA Coarse Aggregate for PCC Classes P, S, B, U	Gradation*	Batch Plant Conveyer Belt or Stockpile	One every other day of PCC production.
		Soundness [when over 1350 m (4500 ft.) elevation]	Stockpile	One per source per year.
		Abrasion #		
		Deleterious Substances [Clay Lumps and Friable Particles, Coal and Lignite, Shale and other Lightweight Particles, Material Passing 75 μm (No. 200) Sieve]	Stockpile	One per source and then at the discretion of the Engineer.
	for Class P	Fractured Coarse Aggregate Particles	Stockpile	One per source.

Provided Materials Group concurs, historical abrasion values may be used.
* Independent Assurance Sampling and Testing required.

TABLE 2 (continued)
ACCEPTANCE SAMPLING GUIDE FOR AGGREGATES

SPECIFI-CATION SECTION	MATERIAL CODE, NAME AND TYPES	TYPE OF TEST(S) REQUIRED	SAMPLING POINT	MINIMUM SAMPLING FREQUENCY
1006	FA Fine Aggregate for PCC Classes P, S, B, U	Gradation*	Batch Plant Conveyer Belt or Stockpile	One every other day of PCC production.
		Sand Equivalent*		
		Soundness [when over 1350 m (4500 ft) elevation]	Stockpile	One per source per year.
		Organic Impurities		
		Mortar Strength		
		Deleterious Substances [Clay Lumps and Friable Particles, Coal and Lignite, Shale and other Lightweight Particles]	Stockpile	One per source and then at the discretion of the Engineer.

* Independent Assurance Sampling and Testing required.

TABLE 2 (continued)
ACCEPTANCE SAMPLING GUIDE FOR AGGREGATES

SPECIFI-CATION SECTION	MATERIAL CODE, NAME AND TYPES	TYPE OF TEST(S) REQUIRED	SAMPLING POINT	MINIMUM SAMPLING FREQUENCY
Refer to Special Provisions	AA Aggregate for Arrestor Bed	Abrasion #	Screen Belt or Stockpile	One per source.
		Specific Gravity		
		Gradation*	Screen Belt or Stockpile	One per shift.
		Fractured Coarse Aggregate Particles*		
		Flakiness Index*		
Refer to Special Provisions	AG Aggregate for Soil-Cement Bank Protection or Cement Stabilized Alluvium	Gradation*	Source or Stockpile	One per 1800 metric tons (2000 tons), minimum of one per day.
		PI*		

Provided Materials Group concurs, historical abrasion values may be used.
* Independent Assurance Sampling and Testing required.

TABLE 3
ACCEPTANCE SAMPLING GUIDE FOR BITUMINOUS MATERIAL

SPECIFI-CATION SECTION	MATERIAL CODE, NAME AND TYPES	TYPE OF TEST(S) REQUIRED	SAMPLING POINT	MINIMUM SAMPLING FREQUENCY
1005	RA Recycling Agent RA-1 RA-5 RA-25 RA-75	Per Specifications	** Circulation Line Recom-mended	Certificate of Compliance required and duplicate sample per 1/2 shift.
1005 301 302 304 404 405	Liquid Asphalt Type MC for RM, Prime, Curing Seals	Per Specifications	** Distributor Recom-mended	Certificate of Compliance required and duplicate sample per delivery unit.
1005 404	Emulsified Asphalt, Special Type Diluted SS-1 or CSS-1 for Tack, Fog Coat	Residue	** Distributor Recom-mended	See PPD▲ For pre-approved undiluted emulsions, Certificate of Compliance required and duplicate sample per delivery unit. For undiluted emulsions not pre-approved, Certificate of Analysis required and triplicate sample per delivery unit.

** Point of sampling specified by Engineer.
▲ Materials Policy and Procedure Directive.
Note: Samples of bituminous material shall be taken by the contractor and witnessed by the Engineer.

TABLE 3 (continued)
ACCEPTANCE SAMPLING GUIDE FOR BITUMINOUS MATERIAL

SPECIFI-CATION SECTION	MATERIAL CODE, NAME AND TYPES	TYPE OF TEST(S) REQUIRED	SAMPLING POINT	MINIMUM SAMPLING FREQUENCY
1005	Emulsified Asphalt RS-1 CRS-1 RS-2 CRS-2 SS-1 CSS-1	Per Specifications	Supplier (For pre-approval of material.)	See PPD▲
		Residue	** Distibutor Recom-mended	See PPD▲ For pre-approved emulsions, Certificate of Compliance required and duplicate sample per delivery unit. For emulsions not pre-approved, Certificate of Analysis required and triplicate sample per delivery unit.
404	for Chip Seal, Tack, Fog Coat			
1005	Asphalt Cement (PG XXXX)	Per Specifications		
404	for Tack			Certificate of Compliance required.
406 407 408 409 411 416 417	for AC, FC, RC		** Circulation Line Recom-mended	Certificate of Compliance required and duplicate sample per 1/2 shift.

** Point of sampling specified by Engineer.
▲ Materials Policy and Procedure Directive.
Note: Samples of bituminous material shall be taken by the contractor and witnessed by the Engineer.

TABLE 3 (continued)
ACCEPTANCE SAMPLING GUIDE FOR BITUMINOUS MATERIAL

SPECIFI-CATION SECTION	MATERIAL CODE, NAME AND TYPES	TYPE OF TEST(S) REQUIRED	SAMPLING POINT	MINIMUM SAMPLING FREQUENCY
1005	ERA Emulsified Recycling Agent ERA-1	Per Specifications	Supplier (For pre-approval of material)	See PPD▲.
	ERA-5 ERA-25 ERA-75	Residue	** Distributor Recom-mended	See PPD▲. For pre-approved ERA, Certificate of Compliance required and duplicate sample per delivery unit. For ERA not pre-approved, Certificate of Analysis required and triplicate sample per delivery unit.
404	ERA (Diluted) for Fog Coat	Residue	** Distributor Recom-mended	See PPD▲. For pre-approved undiluted ERA, Certificate of Compliance required and duplicate sample per delivery unit. For undiluted ERA not pre-approved, Certificate of Analysis required and triplicate sample per delivery unit.

** Point of sampling specified by Engineer.
▲ Materials Policy and Procedure Directive.
Note: Samples of bituminous material shall be taken by the contractor and witnessed by the Engineer.

TABLE 3 (continued)
ACCEPTANCE SAMPLING GUIDE FOR BITUMINOUS MATERIAL

SPECIFI-CATION SECTION	MATERIAL CODE, NAME AND TYPES	TYPE OF TEST(S) REQUIRED	SAMPLING POINT	MINIMUM SAMPLING FREQUENCY
1005 1009 410	Asphalt Cement (PG XXXX) for Asphalt - Rubber (Sprayed Applications)	Per Specifications	Circulation Line - Delivery Unit	Certificate of Compliance required and duplicate sample for each shipment - not less than one set of samples for each 35 metric tons (40 T).
1005 1009 413 414	Asphalt Cement (PG XXXX) for Asphalt - Rubber for RD or RF	Per Specifications	** Delivery Unit Recom-mended	Certificate of Compliance required and duplicate sample per 1/2 shift.
1009	Rubber for Asphalt - Rubber	Gradation	Project	Certificate of Compliance required and one bag per lot per type.
1009 410	CRA ♦ Asphalt - Rubber Type 1, 2, or 3 (Sprayed Applications)	See Special Provisions.	** Distributor Recom-mended	Certificate of Compliance required.

** Point of sampling specified by Engineer.
♦ CRA = Crumb Rubber Asphalt
Note: Samples of bituminous material shall be taken by the contractor and witnessed by the Engineer.

TABLE 3 (continued)
ACCEPTANCE SAMPLING GUIDE FOR BITUMINOUS MATERIAL

SPECIFICATION SECTION	MATERIAL CODE, NAME AND TYPES	TYPE OF TEST(S) REQUIRED	SAMPLING POINT	MINIMUM SAMPLING FREQUENCY
1009 413 414	CRA ♦ Asphalt - Rubber Type 1, 2, or 3 for RD or RF		** Circulation Line Recommended	Certificate of Compliance required.
		Penetration		Duplicate sample per 1/2 shift.
		Softening Point		
		Resilience		
		Rotational Viscosity		
		Rotational Viscosity (at plant)		One sample per batch.
Refer to Special Provisions	Emulsified Binder Agent for Cold Recycled Asphaltic Concrete HFE-300P	See Special Provisions.	Supplier	Material pre-approved by Central Laboratory and Certificate of Compliance required.

** Point of sampling specified by Engineer.
♦ CRA = Crumb Rubber Asphalt
Note: Samples of bituminous material shall be taken by the contractor and witnessed by the Engineer.

TABLE 4
ACCEPTANCE SAMPLING GUIDE FOR PORTLAND CEMENT CONCRETE

SPECIFI-CATION SECTION	MATERIAL CODE, NAME AND TYPES	TYPE OF TEST(S) REQUIRED	SAMPLING POINT	MINIMUM SAMPLING FREQUENCY
401 1006	Portland Cement Concrete Pavement (PCC-Class P)	Compressive Strength*	Immediately before going into paver or forms	Five samples per lot.
		Slump*		
		Entrained Air*		
		Temperature		
		Thickness	Roadway	10 cores per lot.
601 1006	Portland Cement Structural Concrete, Class S and B	Compressive Strength*	At Discharge ##	One set per consecutive 75 m^3 (100 CY) or fraction thereof, per day. For less than 15 m^3 (20 CY), at the Discretion of the Engineer.
		Slump*		
		Temperature		
		Entrained Air*	At Discharge	Sample for air content every 40 m^3 (50 CY) when elevation is above 900 m (3000 ft).
601 1006	Portland Cement Structural Concrete for Minor Precast Structures	Rebound Hammer	At Fabrication Yard	One set of readings per precast unit.

When concrete is pumped, samples should be taken at both the truck and hose discharge to determine that the specifications are met in the structure and to correlate slump and air-entraining results. If correlation is satisfactory, sampling may continue from the most convenient location with occasional retesting for correlation.

* Independent Assurance Sampling and Testing required.

TABLE 4 (continued)
ACCEPTANCE SAMPLING GUIDE FOR PORTLAND CEMENT CONCRETE

SPECIFI-CATION SECTION	MATERIAL CODE NAME AND TYPES	TYPE OF TEST(S) REQUIRED	SAMPLING POINT	MINIMUM SAMPLING FREQUENCY
601 1006	Prestressed and Post-Tensioned Concrete	Compressive Strength	At Discharge ##	One set per member or for each days production.
		Slump		
		Entrained Air		
		Temperature		
912	Shotcrete	Compressive Strength	Test Panels	Sample 3 cores as per Engineer.
		Slump	At Discharge	One per 75m^3 (100 CY).
922 1006	Utility Concrete, Class U	None		

When concrete is pumped, samples should be taken at both the truck and hose discharge to determine that the specifications are met in the structure and to correlate slump and air-entraining results. If correlation is satisfactory, sampling may continue from the most convenient location with occasional retesting for correlation.

TABLE 5
ACCEPTANCE SAMPLING GUIDE FOR MATERIALS USED WITH PORTLAND CEMENT CONCRETE

SPECIFICATION SECTION	MATERIAL CODE, NAME AND TYPES	TYPE OF TEST(S) REQUIRED	SAMPLING POINT	MINIMUM SAMPLING FREQUENCY
602 1003	Prestressing Steel (Spiral, Bars, Strand, Wire)	Tensile Strength, Diameter	Project or Fabrication Plant	Certificate of Compliance required and one 2 m (6 ft) piece from each bar size, heat, reel, or coil.
602 1003	Post-Tensioning Steel	Tensile Strength, Diameter	Project	Certificate of Compliance required and one 2 m (6 ft) piece from each bar size, heat, reel, or coil.
605 1003	Reinforcement Bars (Epoxy Coated or Uncoated)	Tensile Strength, Bending Strength, Elongation, Weight/Meter (Weight/Foot), Coating Thickness [if applicable]		
	Phoenix and Tucson Sources		Fabrication Plant or Supplier's Yard	Certificate of Compliance required and samples as per PPD▲.
			Project	One 2 m (6 ft) bar per shipment. See PPD▲.
	Other sources		Project	Certificate of Compliance required and samples as per PPD▲.
1003	Welded Wire Fabric	Tensile Strength, Diameter, Spelter	Supplier's Yard or Project	Certificate of Compliance required and one 600 mm x 600 mm (2 ft x 2 ft) sample per 25 rolls.

▲ Materials Policy and Procedure Directive.

TABLE 5 (continued)
ACCEPTANCE SAMPLING GUIDE FOR MATERIALS USED WITH PORTLAND CEMENT CONCRETE

SPECIFI-CATION SECTION	MATERIAL CODE, NAME AND TYPES	TYPE OF TEST(S) REQUIRED	SAMPLING POINT	MINIMUM SAMPLING FREQUENCY
1006	Admixtures			Materials must be pre-approved and on the ADOT Approved Products List. See PPD▲.
1006	Curing Compound	Water Loss % Solids	Supplier's Yard or Project	For material from pre-approved lot, Certificate of Compliance only. For material not pre-approved, Certificate of Compliance and 2 liter (1/2 gal.) sample per lot. See PPD▲.
1006	Fly Ash and Natural Pozzolan	Chemical and Physical		
	Domestic Sources			Material supplied from an Approved Material Source. See PPD▲.
	Foreign Sources		Distributor's Storage Facility	Material supplied from an Approved Material Source and one 4 liter (1 gal.) sample per week. See PPD▲.

▲ Materials Policy and Procedure Directive.

TABLE 5 (continued)
ACCEPTANCE SAMPLING GUIDE FOR MATERIALS USED WITH PORTLAND CEMENT CONCRETE

SPECIFI-CATION SECTION	MATERIAL CODE, NAME AND TYPES	TYPE OF TEST(S) REQUIRED	SAMPLING POINT	MINIMUM SAMPLING FREQUENCY
1006	Water	Soluble Salts pH	Source ^	One sample [500 mL (1 pint) in glass container] per source.
1006 406 407 408 409 413 414 416 417	Hydraulic Cement (All Types)	Chemical and Physical		When used for mineral admixture for asphaltic concrete, only a Certificate of Analysis is required.
	Domestic Sources			Material supplied from an Approved Material Source. See PPD▲.
	Foreign Sources		Distributor's Storage Facility	Material supplied from an Approved Material Source and one 4 liter (1 gal.) sample per week. See PPD▲.
1011	Joint Materials	Durometer Viscosity Compression Thickness	Project	For material from pre-approved lot, Certificate of Compliance only. For material not pre-approved, Certificate of Compliance and one sample, for liquid material [20 liters (5 gal.)].

▲ Materials Policy and Procedure Directive.
^ No sample is necessary if water is potable and comes from a proven source.

TABLE 5 (continued)
ACCEPTANCE SAMPLING GUIDE FOR MATERIALS USED WITH PORTLAND CEMENT CONCRETE

SPECIFI-CATION SECTION	MATERIAL CODE, NAME AND TYPES	TYPE OF TEST(S) REQUIRED	SAMPLING POINT	MINIMUM SAMPLING FREQUENCY
1013 604	Preformed Fabric Bearing Pads	Thickness Compression Load	Project	Certificate of Analysis required and two sample pads from every 100, or fraction thereof, with a minimum of one sample pad from each lot for each type of pad. (Tested by ADOT.)
1013 604	Plain and Fabric Reinforced Elastomeric Bearing Pads	Per Specification Subsection 1013-2	Project	Certificate of Analysis required and two sample pads from every 100, or fraction thereof, with a minimum of one sample pad from each lot for each type of pad. (Tested by Engineer approved testing laboratory.)
1013 604	Steel Reinforced Elastomeric Bearing Pads	Per ASTM D 4014 and Specification Subsection 1013-2	Project	Certificate of Analysis required and two sample pads from every 100, or fraction thereof, with a minimum of one sample pad from each lot for each type of pad. (Tested by Engineer approved testing laboratory.)

TABLE 6
ACCEPTANCE SAMPLING GUIDE FOR STABILIZED SOILS AND BASES

SPECIFI-CATION SECTION	MATERIAL CODE, NAME AND TYPES	TYPE OF TEST(S) REQUIRED	SAMPLING POINT	MINIMUM SAMPLING FREQUENCY
301	LS Lime Treated Subgrade	Proctor Density*	Roadway	One per soil type.
		Optimum Moisture*		
		Compaction*	Roadway	One per lift per 300 m (1000 ft).
302	CS Cement Treated Subgrade	Proctor Density*	Roadway	One per soil type.
		Optimum Moisture*		
		Compaction*	Roadway	One per lift per 300 m (1000 ft).
304	CB Cement Treated Base	Proctor Density*	Roadway	At start of production then one per week.
		Optimum Moisture*		
		Compaction*	Roadway or Point of Placement	One per lift per 300 m (1000 ft).
		Compressive Strength*	Roadway or Point of Placement	Five random sets of three per shift.

* Independent Assurance Sampling and Testing required.

TABLE 6 (continued)
ACCEPTANCE SAMPLING GUIDE FOR STABILIZED SOILS AND BASES

SPECIFI-CATION SECTION	MATERIAL CODE, NAME AND TYPES	TYPE OF TEST(S) REQUIRED	SAMPLING POINT	MINIMUM SAMPLING FREQUENCY
305	LC Lean Concrete Base	Compressive Strength*	At Discharge	Four random samples per 3000 m^2 (4000 SY), minimum four samples per shift.
		Slump*		
		Entrained Air*		
		Thickness	Roadway	See Specifications.
Refer to Special Provisions	BB Bituminous Treated Base	See Special Provisions	Roadway	At the discretion of the Engineer.
Refer to Special Provisions	SA Cement Stabilized Alluvium	Compressive Strength*	Roadway or Point of Placement	One set of three per 1150 m^3 (1500 CY), minimum one set of three per 1/2 shift.
Refer to Special Provisions	Soil-Cement Bank Protection	Compressive Strength*	Roadway or Point of Placement	One set of three per 1150 m^3 (1500 CY), minimum one set of three per 1/2 shift.

* Independent Assurance Sampling and Testing required.

TABLE 7
ACCEPTANCE SAMPLING GUIDE FOR BITUMINOUS MIXTURES

SPECIFI-CATION SECTION	MATERIAL CODE, NAME AND TYPES	TYPE OF TEST(S) REQUIRED	SAMPLING POINT	MINIMUM SAMPLING FREQUENCY
405	RM Road Mix	See Special Provisions.		
406	AC Asphaltic Concrete	% Asphalt*	Roadway	4 per lot.
		Moisture Content*		
		Gradation*		
		Marshall* (Density, Stability, and Flow)		
		Rice*		
		Compaction [Courses > 40 mm (1½ in.)]	Roadway	10 cores per lot (10 locations/1 core per location).
407	FC Asphaltic Concrete Friction Course	% Asphalt*	Trucks at Mixing Plant	1 per 1/2 shift.
		Moisture Content*		

* Independent Assurance Sampling and Testing required.

TABLE 7 (continued)
ACCEPTANCE SAMPLING GUIDE FOR BITUMINOUS MIXTURES

SPECIFI-CATION SECTION	MATERIAL CODE, NAME AND TYPES	TYPE OF TEST(S) REQUIRED	SAMPLING POINT	MINIMUM SAMPLING FREQUENCY
408	RC Recycled Asphaltic Concrete	% Asphalt*	Roadway	3 required on first full shift of AC production, thereafter minimum of two per day.
		Moisture Content*		
		Gradation*		
		Rice*		
		Marshall * (Density, Stability, and Flow)	Roadway	3 per day.
		Compaction [Courses > 40 mm (1½ in.)]	Roadway	10 cores per lot (10 locations/1 core per location).
409	MS Asphaltic Concrete - Miscellaneous Structural	% Asphalt	Roadway	At the discretion of the Engineer.
		Moisture Content		
		Rice		
		Marshall (Density, Stability, and Flow)		

* Independent Assurance Sampling and Testing required.

TABLE 7 (continued)
ACCEPTANCE SAMPLING GUIDE FOR BITUMINOUS MIXTURES

SPECIFI-CATION SECTION	MATERIAL CODE, NAME AND TYPES	TYPE OF TEST(S) REQUIRED	SAMPLING POINT	MINIMUM SAMPLING FREQUENCY
411	FC Asphaltic Concrete Friction Course - Miscellaneous	% Asphalt Moisture Content	Trucks at Mixing Plant	At the discretion of the Engineer.
413	RD Asphalt - Rubber Asphaltic Concrete	% Asphalt-Rubber* Moisture Content*	Trucks at Mixing Plant, Windrow, or behind laydown machine	4 per shift.
414	RF Asphalt - Rubber Asphaltic Conctete Friction Course	% Asphalt-Rubber* Moisture Content*	Trucks at Mixing Plant	4 per shift.

* Independent Assurance Sampling and Testing required.

TABLE 7 (continued)
ACCEPTANCE SAMPLING GUIDE FOR BITUMINOUS MIXTURES

SPECIFI-CATION SECTION	MATERIAL CODE, NAME AND TYPES	TYPE OF TEST(S) REQUIRED	SAMPLING POINT	MINIMUM SAMPLING FREQUENCY
416	AC Asphaltic Concrete - End Product	% Asphalt*	Roadway	4 per lot.
		Moisture Content*		
		Gradation*		
		Marshall* (Density, Stability, and Flow)		
		Rice*		
		Unless otherwise specified, Compaction [Courses > 40 mm (1½ in.)]	Roadway	20 cores per lot (10 locations/2 cores per location.

* Independent Assurance Sampling and Testing required.

TABLE 7 (continued)
ACCEPTANCE SAMPLING GUIDE FOR BITUMINOUS MIXTURES

SPECIFI-CATION SECTION	MATERIAL CODE, NAME AND TYPES	TYPE OF TEST(S) REQUIRED	SAMPLING POINT	MINIMUM SAMPLING FREQUENCY
417	AC Asphaltic Concrete - End Product (SHRP)	% Asphalt*	Roadway	4 per lot.
		Moisture Content*		
		Gradation*		
		Gyratory Density*		
		Rice*		
		Compaction [Courses > 40 mm (1½ in.)]	Roadway	20 cores per lot (10 locations/2 cores per location.

* Independent Assurance Sampling and Testing required.

TABLE 8
ACCEPTANCE SAMPLING GUIDE FOR MISCELLANEOUS MATERIALS

SPECIFI-CATION SECTION	MATERIAL CODE, NAME AND TYPES	TYPE OF TEST(S) REQUIRED	SAMPLING POINT	MINIMUM SAMPLING FREQUENCY
301 406 407 408 409 413 414 416 417	Lime	Chemical and Physical	Project or Commercial Source	Certificate of Compliance required and one sample [4 liters (1 gal.) in a metal can] per project. When used for mineral admixture for asphaltic concrete, only a Certificate of Analysis is required.
501	CMP Corrugated Metal Pipe (Coated or Non-coated)	Yearly check by Central Lab	Supplier's Yard	Certificate of Compliance required.
501 1006	Non-Reinforced, Cast-in-Place Concrete Pipe	Compressive Strength	At Discharge ##	See Specifications.
		Slump		
		Entrained Air		
		Wall Thickness	Site	

When concrete is pumped, samples should be taken at both the truck and hose discharge to determine that the specifications are met in the structure and to correlate slump and air-entrainment results. If correlation is satisfactory, sampling may continue from the most convenient location with occasional retesting for correlation.

TABLE 8 (continued)
ACCEPTANCE SAMPLING GUIDE FOR MISCELLANEOUS MATERIALS

SPECIFI-CATION SECTION	MATERIAL CODE, NAME AND TYPES	TYPE OF TEST(S) REQUIRED	SAMPLING POINT	MINIMUM SAMPLING FREQUENCY
501 1010	Reinforced or Non-Reinforced Concrete Pipe	Compression Absorption Wall Thickness	Supplier's Yard	Certificate of Compliance required and one sample for each 100 sections per size per type.
Refer to Special Provisions	Vitrified Clay Pipe	Compression	Project	One sample for each 100 sections per size per type.
505	Brick	Compression	Project	5 bricks per project.
Refer to Special Provisions	Cinder Block or Slump Block	Compression Absorption	Project	8 cinder blocks/ 8 slump blocks per project.
604 731 1004 1012	High Strength Bolts, Nuts, Washers, or Anchor Bolts	Rockwell Hardness Wedge Tensile Strength	Project	Certificate of Analysis required and three samples per lot, or 0.1% of lots in excess of 3000, for each bolt diameter, including nuts and washers.
608 1007	Sign Reflective Sheeting	Color Specific Intensity	Project	Certificate of Compliance and one 300 mm x 300 mm (1ft x 1ft) aluminum back panel per type.
	Silk Screening	Color Specific Intensity	Project	Certificate of Compliance and one sample per type. 75 mm (3 in.) diameter circle required on panel background if color processing is used.

TABLE 8 (continued)
ACCEPTANCE SAMPLING GUIDE FOR MISCELLANEOUS MATERIALS

SPECIFI-CATION SECTION	MATERIAL CODE, NAME AND TYPES	TYPE OF TEST(S) REQUIRED	SAMPLING POINT	MINIMUM SAMPLING FREQUENCY
701 704 708	Glass Beads	Roundness Gradation Index of Reflection Moisture Resistance	Supplier's Yard (Recom-mended) or Project	Certificate of Compliance required and one sample (full sack) per lot.
701 705	Pavement Marking Tape	Thickness Reflectivity	Project	Certificate of Compliance required and one sample per type.
704	Thermoplastic Markings	Thickness Reflectivity	Roadway	Certificate of compliance required and one sample per type.
706	Raised Non-Reflective Pavement Markers	Compressive Strength Dimensions	Project	Certificate of Compliance required and one sample per lot per type.
706	Raised Reflective Pavement Markers	Specific Intensity Abrasion Resistance Compressive Strength Dimensions	Project	Certificate of Compliance required and 3 samples per lot per type.
708	Permanent Pavement Marking (Painted)	See Special Provisions.	Supplier or Project	Certificate of Analysis required and one sample [1 liter (1 qt.) in a metal can] per batch per type.

TABLE 8 (continued)
ACCEPTANCE SAMPLING GUIDE FOR MISCELLANEOUS MATERIALS

SPECIFI-CATION SECTION	MATERIAL CODE, NAME AND TYPES	TYPE OF TEST(S) REQUIRED	SAMPLING POINT	MINIMUM SAMPLING FREQUENCY
732	PVC Polyvinyl Chloride Pipe for Electrical Conduit	Resistance to Crushing	Project	One sample per 1500 m (5000 ft).
808	PVC Polyvinyl Chloride Pipe for Water	Wall Thickness	Project	One sample per 1500 m (5000 ft).
		Burst Pressure		
		Diameter		
902	Chain Link Fabric			Certificate of Compliance required.
902	Fence Post and Rails			Certificate of Compliance required.
902 903	Misc. Fence Hardware			Certificate of Compliance required.
902 903	Post Clips, Hog Rings, Tie Wire, or Tension Wire			Certificate of Compliance required.

TABLE 8 (continued)
ACCEPTANCE SAMPLING GUIDE FOR MISCELLANEOUS MATERIALS

SPECIFI-CATION SECTION	MATERIAL CODE, NAME AND TYPES	TYPE OF TEST(S) REQUIRED	SAMPLING POINT	MINIMUM SAMPLING FREQUENCY
903	Barbless Wire or Barbed Wire	Tensile Strength Spelter Diameter Barb Spacing [if applicable]	Supplier's Yard or Project	Certificate of Compliance^^ required and one 3 m (10 ft) sample per 25 rolls.
903	Fence Stays			Certificate of Compliance required.
903	T-Post	Weight/Meter (Weight/Foot) Length	Supplier's Yard or Project	Certificate of Compliance^^ required and minimum of five per lot.
903	Woven Wire Fabric	Spelter Diameter Tensile Strength	Supplier's Yard or Project	Certificate of Compliance^^ required and one 600 mm x 600 mm (2 ft x 2 ft) sample per 25 rolls.
904 913	Wire Rope			Certificate of Compliance required.

^^ Certifying only that manufacturing processes occurred in the United States. (This certification required for Federal-Aid projects only. See Special Provisions for exception based on quantity being used.)

TABLE 8 (continued)
ACCEPTANCE SAMPLING GUIDE FOR MISCELLANEOUS MATERIALS

SPECIFI-CATION SECTION	MATERIAL CODE, NAME AND TYPES	TYPE OF TEST(S) REQUIRED	SAMPLING POINT	MINIMUM SAMPLING FREQUENCY
1002	Paint	Weight/Liter (Weight/Gal.)	Supplier or Project	Certificate of Analysis required and one sample [1 liter (1 qt.) in a metal can] per batch per type.
		Viscosity		
		Dry Time		
		Pigment		
		IR Scan		
		Chemical Analysis		
1008	Prismatic Reflectors	Air Tightness	Project	Certificate of Compliance required and one sample (5-10) per type per project.
1012	Guardrail Fasteners	Spelter	Project	Certificate of Compliance required and three samples per type.
		Rockwell Hardness		
		Tensile Strength		
1012	Guardrail Posts and Blocks	None	Project	Certificate of Compliance required. For timber guardrail posts and blocks, see PPD▲.

▲ Materials Policy and Procedure Directive.

TABLE 8 (continued)
ACCEPTANCE SAMPLING GUIDE FOR MISCELLANEOUS MATERIALS

SPECIFI-CATION SECTION	MATERIAL CODE, NAME AND TYPES	TYPE OF TEST(S) REQUIRED	SAMPLING POINT	MINIMUM SAMPLING FREQUENCY
1014	Geo-synthetics		Supplier and Project	If material has been pre-approved, Certificate of Compliance required and one sample for every 10 rolls per lot. (Minimum of one sample per lot.) Sample should be taken 1.5 m (5 ft) from the end of the roll, and shall be 1 m (3 ft) long by the full width of the roll, or a minimum of 3 m^2 (30 square feet).
			Project	If material has not been pre-approved, Certificate of Analysis required and one sample for every 10 rolls of per lot. (Minimum of one sample per lot.) Sample should be taken 1.5 m (5 ft) from the end of the roll, and shall be 1 m (3 ft) long by the full width of the roll, or a minimum of 3 m^2 (30 square feet).

NOTE: Information on Geosynthetics continued on next page.

TABLE 8 (continued)
ACCEPTANCE SAMPLING GUIDE FOR MISCELLANEOUS MATERIALS

SPECIFI-CATION SECTION	MATERIAL CODE, NAME AND TYPES	TYPE OF TEST(S) REQUIRED	SAMPLING POINT	MINIMUM SAMPLING FREQUENCY
NOTE: Information on Geosynthetics continued from previous page.				
1014 412	Pavement Fabric	Per Specification Subsection 1014-2		
1014 306	Geogrid	Per Specification Subsection 1014-3		
1014 208	Separation Geotextile Fabric	Per Specification Subsection 1014-4		
1014 913	Bank Protection Fabric	Per Specification Subsection 1014-5		
1014 203	Geo-composite Wall Drain System	Per Specification Subsection 1014-6		
1014 307	Geo-composite Edge Drain System	Per Specification Subsection 1014-7		One sample [1.5 m (5 ft) long] per lot.
208	Geo-membrane	See Special Provisions.		

TABLE 9
INDEX OF MATERIALS

MATERIAL	ABBREVIATION	PAGE
Admixtures for Portland Cement Concrete	-	32
Aggregate for Arrestor Bed	AA	23
Aggregate for Cement Stabilized Alluvium	AG	23
Aggregate for Cement Treated Base	AG	9
Aggregate for Lean Concrete Base	AG	9
Aggregate for Road Mix	AG	11
Aggregate for Soil-Cement Bank Protection	AG	23
Aggregate Base	AB	5-6
Aggregate Subbase	AS	7-8
Asphalt Cement	-	25
Asphalt Cement for Asphalt-Rubber	-	27
Asphaltic Concrete	AC	37
Asphaltic Concrete - End Product	AC	40
Asphaltic Concrete - End Product (SHRP)	AC	41
Asphaltic Concrete Friction Course	FC	37
Asphaltic Concrete Friction Course - Misc.	FC	39
Asphaltic Concrete - Miscellaneous Structural	MS	38
Asphalt-Rubber	CRA	27-28
Asphalt-Rubber Asphaltic Concrete	RD	39
Asphalt-Rubber A.C. Friction Course	RF	39
Bank Protection Fabric	-	49
Barbed Wire	-	46
Barbless Wire	-	46
Bearing Pads	-	34
Bedding Material for Pipe	BM	19
Bedding Material for PVC Irrigation Pipe	BM	20
Bituminous Treated Base	BB	36
Blotter Material	BL	10
Borrow	BO	1
Brick	-	43
Cement Stabilized Alluvium	SA	36
Cement Treated Base	CB	35
Cement Treated Subgrade	CS	35
Chain Link Fabric	-	45

TABLE 9 (continued)
INDEX OF MATERIALS

MATERIAL	ABBREVIATION	PAGE
Cinder Block	-	43
Coarse Aggregate for PCC	CA	21
Cover Material	CM	10
Curing Compound	-	32
Decomposed Granite	-	3
Embankment	EM	1
Emulsified Asphalt	-	25
Emulsified Asphalt - Special Type	-	24
Emulsified Binder Agent for Cold Recycled Asphaltic Concrete	-	28
Emulsified Recycling Agent	ERA	26
Fence Hardware, Misc.	-	45
Fence Post and Rails	-	45
Fence Stays	-	46
Filter Material for Perforated Pipe	-	19
Fine Aggregate for PCC	FA	22
Fly Ash and Natural Pozzolan	-	32
Geocomposite Edge Drain System	-	49
Geocomposite Wall Drain System	-	49
Geogrid	-	49
Geomembrane	-	49
Geosynthetics	-	48-49
Glass Beads	-	44
Granite Mulch	GM	3
Guardrail Fasteners	-	47
Guardrail Posts and Blocks	-	47
High Strength Bolts, Nuts, Washers, and Anchor Bolts	-	43
Hydraulic Cement	-	33
Joint Materials	-	33

TABLE 9 (continued)
INDEX OF MATERIALS

MATERIAL	ABBREVIATION	PAGE
Lean Concrete Base	LC	36
Lime	-	42
Lime Treated Subgrade	LS	35
Liquid Asphalt	-	24
Mineral Aggregate for Asphaltic Concrete	MA	11
Mineral Aggregate for AC-End Product	MA	17
Mineral Aggregate for AC-End Product (SHRP)	MA	18
Mineral Aggregate for AC Friction Course	MA	12
Mineral Aggregate for ACFC-Miscellaneous	MA	15
Mineral Aggregate for AC-Misc. Paving	MA	19
Mineral Aggregate for AC-Misc. Structural	MA	14
Mineral Aggregate for Asphalt-Rubber AC	MA	15
Mineral Aggregate for Asphalt-Rubber ACFC	MA	16
Mineral Aggregate for Recycled AC	MA	13
Natural Ground	NG	1
Paint	-	47
Pavement Fabric	-	49
Pavement Marking Tape	-	44
Permanent Pavement Marking (Painted)	-	44
Pipe Backfill	PB	4
Pipe, Corrugated Metal (Coated or Non-coated)	CMP	42
Pipe, Non-Reinforced Cast in Place Concrete	-	42
Pipe, Polyvinyl Chloride for Electrical Conduit	PVC	45
Pipe, Polyvinyl Chloride for Water	PVC	45
Pipe, Reinforced or Non-Reinforced Concrete	-	43
Pipe, Vitrified Clay	-	43
Plating Material for Pipe Ends	-	20
Portland Cement Concrete Pavement	-	29
Portland Cement Structural Concrete	-	29
Post Clips and Hog Rings	-	45
Post-Tensioning Steel	-	31
Prestressed and Post-Tensioned Concrete	-	30
Prestressing Steel	-	31
Prismatic Reflectors	-	47

TABLE 9 (continued)
INDEX OF MATERIALS

MATERIAL	ABBREVIATION	PAGE
Raised Non-Reflective Pavement Markers	-	44
Raised Reflective Pavement Markers	-	44
Recycled Asphaltic Concrete	RC	38
Recycling Agent	RA	24
Reinforcement Bars	-	31
Road Mix	RM	37
Rock	RK	20
Rubber for Asphalt-Rubber	-	27
Shotcrete	-	30
Sign Reflective Sheeting	-	43
Silk Screening	-	43
Slump Block	-	43
Soil for Shoulder Build-up	-	2
Soil-Cement Bank Protection	-	36
Separation Geotextile Fabric	-	49
Structure Backfill	SB	4
Subgrade	SG	2
T-Post	-	46
Thermoplastic Markings	-	44
Tie Wire and Tension Wire	-	45
Top Soil	TS	3
Trench Backfill	TB	2
Utility Concrete, Class U	-	30
Water	-	33
Welded Wire Fabric	-	31
Wire Rope	-	46
Woven Wire Fabric	-	46

July 15, 2005
(7 Pages)

SERIES 1000
CERTIFICATES

1. SCOPE

1.1 Section 106.05 of the Specifications stipulates that when required by the Standard Specifications or the Special Provisions, either a Certificate of Compliance or a Certificate of Analysis shall be furnished for certain materials or manufactured assemblies prior to their use. The Engineer may permit the use of these materials prior to, or without, sampling and testing if the appropriate certificate is provided. This permission is granted for these certain materials or manufactured assemblies because the Department either relies on the manufacturer's test results, accepts the material based on a manufacturing process that cannot be tested, suffers little risk by using the material prior to testing, or is unable to perform the tests. The Engineer reserves the right to revoke this permission for any cause, such as, the materials appear damaged, the materials continually fail Department testing, or any similar reason. Project personnel are expected to exercise good engineering judgement in evaluating the condition of material prior to its use. Section 106.05 of the Specifications states that materials or manufactured assemblies, for which a certificate is furnished, may be sampled and tested at any time. If the material is not in conformance with the requirements of the plans and specifications, it will be subject to rejection whether in place or not. Certificates shall comply with the requirements specified herein, and of the Specifications and applicable project Special Provisions.

1.2 Certificates may be prepared by either the manufacturer or the supplier of the material being certified. When material is certified by a supplier, he shall upon request provide documentation from the manufacturer indicating that the material meets the requirements of the Specifications. For purposes of certifying materials, a supplier is defined as an organization that on a routine basis maintains an inventory of the material in question for sale as a vendor or use as a contractor or subcontractor. A vendor, contractor, or subcontractor purchasing a supply of material on a one time basis for a particular project does not qualify as a supplier.

1.3 The contractor shall submit an original or copy of the certificate to the Engineer. The certificate shall be retained in the project file.

1.4 A certificate shall accompany each lot of material delivered to the project. If multiple deliveries of a lot are made to the project, the first shipment must be accompanied by a certificate. Subsequent deliveries shall be accompanied by either a copy of the certificate, or a shipping document that contains identification indicating that the material delivered is represented by the certificate.

1.5 The procedures specified herein and in Section 106.05 of the Specifications have been developed to assure compliance with the Specifications and to standardize certification procedures. Policy and Procedure Directives are issued by Materials Group for materials that require further explanation or have additions or deviations from the general requirements. Materials requiring a Certificate of Compliance or a Certificate of Analysis that are currently covered by Policy and Procedure Directives are:

1. Chemical and Air Entraining Admixtures for Portland Cement Concrete
2. Curing Compounds
3. Emulsified Bituminous Materials
4. Hydraulic Cement, Fly Ash, and Natural Pozzolan
5. Reinforcing Bars
6. Timber Guard Rail Posts and Blocks

1.6 An example of a typical Certificate of Compliance is given in Figure 1. Manufacturers or suppliers may use Department distributed certificate forms, as issued for some materials through Materials Group Policy and Procedure Directives, or they may use forms of their own choice or origin so long as all the requirements are met.

2. CERTIFICATE REQUIREMENTS

2.1 A certificate of compliance shall contain the following information:

(1) A description of the material supplied.

(2) Quantity of material represented by the certificate.

(3) Means of material identification, such as label, lot number, marking, etc.

(4) Statement that the material complies in all respects with the specific requirements of the cited specifications. Certificates shall state compliance to the specific cited specification, such as, AASHTO M-194, ASTM A-588, etc.; or, specific table or subsection of the Arizona Department of Transportation Standard Specifications or Special Provisions; or, they may reference both.

(5) The name, title, and signature of a person having legal authority to bind the manufacturer or the supplier of the material. The date of the signature shall also be given. The name and address of the manufacturer or supplier of the material shall be shown on the certificate. A copy or facsimile reproduction (FAX) will be acceptable. However, the original certificate shall be made available upon request. The person signing the certificate shall be in one of the following categories:

a. An officer of a corporation.
b. A partner in a business partnership or an owner.
c. A general manager.
d. Any person having been given the authority in writing by one of the three listed above. The manufacturer or supplier may submit a list of those who are authorized to sign certificates. This list shall be submitted under the name, title, and signature of one of the first three listed above. This list will be kept on file for subsequent certificates received on that project.

2.2 Each of the first four items specified in section 2.1 above shall be completed prior to the signing and dating as defined in item five. No certificate will be accepted that has been altered, added to, or changed in any way after the authorized signature and date have been affixed to the original certificate. However, notations of a clarifying nature, such as project number, contractor, or quantity shipped are acceptable, provided the basic requirements of the certificate are not affected.

2.3 Specifications for Federal-Aid projects require that additional information be contained in the certification of cement and steel products. Certificates for cement are required to additionally identify whether the cement is foreign or domestic. Certificates for steel products are required to additionally certify that all manufacturing processes to produce steel products, and any application of a coating to iron or steel, occurred in the United States. For steel products, the project Special Provisions contain an exception to this requirement based on the quantity of a particular product being used.

2.4 A Certificate of Analysis shall include all the information required in a Certificate of Compliance and, in addition, shall include the results of all tests required by the Specifications.

2.5 Each certificate shall be checked for compliance to these requirements. If certificates are received which are deficient, the project should retain the certificate and return a copy to the contractor, notifying him in writing how the certificate is deficient. The material represented by a deficient certificate is unacceptable for use until an acceptable certificate is received.

3. MATERIALS CERTIFICATE LOG

3.1 For each project, a Materials Certificate Log shall be kept. All materials which require a certificate, and documentation of certificates received, shall be listed.

3.2 The log shall include the description/identification of the material being certified, the type of certificate required (Certificate of Compliance or Certificate of Analysis), the date the certificate was received, the date the material was checked against the certificate to assure the material received is the material represented by the certificate, the name of the person making the inspection of the material/certificate, and whether or not the certificate is acceptable.

3.3 The log shall include a "Comments" area for any further explanation or clarification, such as action taken in handling deficient certificates. If the Engineer directs testing on any material received with a certificate, the identification of the sample by sample number, date sampled, etc. shall be noted in the comments area for reference to testing performed.

3.4 An example of a Materials Certificate Log that may be used is shown in Figure 2. Acceptable alternates, such as computer generated reports, may be used provided the required information is given.

3.5 At the completion of the project, the resident engineer shall sign and date the completed log. A copy of the Materials Certificate Log shall be attached to the Materials Sample Checklist which is submitted to the Regional Materials Engineer along with other materials related documents.

4. MATERIALS REQUIRING CERTIFICATES

4.1 Figure 3 provides a listing of various items which require either a Certificate of Compliance or a Certificate of Analysis. It is not intended that this list address all items for which either a Certificate of Compliance or a Certificate of Analysis is required. The applicable Specifications and project Special Provisions will govern in determining the need for either a Certificate of Compliance or a Certificate of Analysis.

ABC CHEMICAL COMPANY

1234 South XYZ Street
Somewhere, Arizona 56789

CERTIFICATE OF COMPLIANCE

This is to certify that the following material, manufactured and supplied by ABC Chemical Company, complies in all respects with the requirements for "Chemical Admixtures for Concrete", AASHTO Designation M-194, for a Type F admixture (High Range Water Reducer) as specified in Section 1006-2.04(C) of the Arizona Department of Transportation Standard Specifications.

Description of Material: WR008 (Water Reducing Agent)
Quantity: 1895 liters (500 Gallons)
Lot Number: 1-4U-2C

No halogens or chlorides are added to WR008 as functional ingredients during manufacture.

I.M. Boss 12-3-99

I.M. Boss
President

RST:uv

EXAMPLE

FIGURE 1

ARIZONA DEPARTMENT OF TRANSPORTATION

MATERIALS CERTIFICATE LOG

PROJECT NO. _____ CONTRACTOR _____ SHEET _____ OF _____

DESCRIPTION / IDENTIFICATION OF MATERIAL	TYPE OF CERT. REQ'D.	DATE CERT. REC'D	CHECKLIST						DATE MATERIAL CHECKED AGAINST CERT.	CERT. ACCEPTABLE (Y / N)	INSPECTOR	COMMENTS
			DESCRIPTION OF MATERIAL	QUANTITY REPRESENTED	MAT'L. IDENTIFICATION	COMPLIANCE STATEMENT	AUTH. SIGNATURE/DATE	TEST RESULTS (CERT. OF ANALYSIS)				

RESIDENT ENGINEER _____ DATE _____
(Signature)

44-4409 R02/04

FIGURE 2

CERTICATE OF COMPLIANCE	CERTIFICATE OF ANALYSIS
Asphalt-Rubber Materials	Asphalt Cement for Bituminous Mixes (prior to production)
Bituminous Materials	Emulsified Bituminous Materials (not preapproved)
Bank Protection Metal Items	Bearing Pads
Chain Link Cable Barrier	
Chain Link Fence Materials	
Concrete Admixtures	
Concrete and Metal Pipe	
Curing Compounds	
Damp Proofing, Water Proofing Materials	
Delinerators and Markers	
Fly Ash	Fly Ash
Geosynthetics/Geotextile Fabrics	Geosynthetics/Geotextile Fabrics (not preapproved)
Glass Beads	Glass Beads for Dual Component Pavement Markings
Guard Rail Materials	Guard Rail Anchor Bolts
Hydraulic Cement	Hydraulic Cement
Lime	Lime (when used as mineral admixture in asphaltic concrete mixtures)
Joint Materials	High Strength Bolts, Nuts, Washers, and Anchor Bolts
Paint	
Preformed Plastic Pavement Marking	
Prestressing and Post-Tensioning Steel	
Prismatic Reflectors	
Raised Pavement Markers	
Retroreflective Sheeting	
Reinforcing Steel	
Roadside Sign Supports	Breakaway Sign Posts
Seeding and Planting Materials	Steel Piling
Sign Panels and Related Materials	Structural Metals
Spillway, Downdrain, Inlet and Outlet Materials	Structural Steel
Thermoplastic Pavement Markings	Dual Component Pavement Markings
Traffic Controller Assembly	
Trees, Shrubs, and Plants	
Wire Fence Materials	

FIGURE 3

ROUNDING PROCEDURE

The following describes the rounding procedure which is to be used for rounding numbers to the required degree of accuracy:

(a) Except as specified in paragraph (b) below, the following procedure will apply. This procedure correlates with the "built-in" rounding method normally utilized by calculators and computers.

1) When the figure next beyond the last figure or place to be retained is less than 5, the figure in the last place retained is left unchanged.

Examples: Rounding 2.6324 to the nearest thousandth is 2.632
Rounding 7843.343 to the nearest hundredth is 7843.34
Rounding 4928.22 to the nearest tenth is 4928.2
Rounding 7293.1 to the nearest whole number is 7293
Rounding 2042 to the nearest units of 10 is 2040
Rounding 3548 to the nearest units of 100 is 3500
Rounding 8436 to the nearest units of 1000 is 8000

2) When the figure next beyond the last figure or place to be retained is 5 or larger, the figure in the last place retained is increased by 1.

Examples: Rounding 4839.4575 to the nearest thousandth is 4839.458
Rounding 9347.215 to the nearest hundredth is 9347.22
Rounding 8420.35 to the nearest tenth is 8420.4
Rounding 1728.5 to the nearest whole number is 1729
Rounding 3685 to the nearest units of 10 is 3690
Rounding 6650 to the nearest units of 100 is 6700
Rounding 2500 to the nearest units of 1000 is 3000

Rounding 2.6326 to the nearest thousandth is 2.633
Rounding 7843.347 to the nearest hundredth is 7843.35
Rounding 4928.28 to the nearest tenth is 4928.3
Rounding 7293.9 to the nearest whole number is 7294
Rounding 2046 to the nearest units of 10 is 2050
Rounding 3572 to the nearest units of 100 is 3600
Rounding 8634 to the nearest units of 1000 is 9000

3) No result shall be rounded more than once.

Example: 3024.5 rounded to the nearest units of 10 will be 3020;

<u>not</u>

3024.5 rounded to 3025, and then rounded again to 3030.

(b) The rounding procedure specified in paragraph (a) above shall be used for all calculations and recording of data in performing materials testing, except when a specific test method cites a method of rounding which differs from this procedure, for example, the sand equivalent test (AASHTO T 176 or Arizona Test Method 242).

(c) Compliance will be based upon interpreting the reported results as though they are rounded to the terms (whole numbers, decimals, or fractions reduced to decimals) of the specifications. For example, a value reported as 8.4% shall be considered as having no deviation from specifications that require 4 – 8%. It would however be a deviation for specifications requiring 4.0 – 8.0%.

(d) Computers and most electronic calculators automatically carry several decimal places beyond the point of desired accuracy. At times, results of calculations utilizing these values are different than that achieved when calculations are performed utilizing values that have been rounded to the desired degree of accuracy by the above rules. The user is cautioned that the use of a computer or electronic calculator without re-entry of values after rounding, and discarding any figures beyond those needed, may cause unacceptable variations in final results.

METRIC GUIDE

The following information is provided as a guide for utilizing the International System of Units (SI), generally referenced as "metric units". Related information can be found in AASHTO R1 "Metric Practice Guide", and ASTM E380, "Use of the International System of Units (SI)(The Modernized Metric System)".

Included herein are commonly used equivalents and conversions for U.S. Customary Units and Metric Units. It is not the intention of this guide to provide a detailed compilation of such equivalents and conversions. Such lists are available in many publications, including those referenced above.

One common conversion, which is found in many test procedures, is to determine an equivalent temperature in units of either degrees Celsius or degrees Fahrenheit.

Convert degrees Fahrenheit to degrees Celsius by:

$$°C = \frac{5}{9} \times (°F - 32)$$

Convert degrees Celsius to degrees Fahrenheit by:

$$°F = \left[\frac{9}{5} \times °C\right] + 32$$

Under the SI (Metric) system, the base unit for mass is the "kilogram". (Although not technically correct, "weight" is often used in common practice to mean "mass".) The base unit for length is the "meter". The base unit for time is the "second". Primary metric units for area and volume are the "square meter" and the "cubic meter", respectively.

In addition to expressing values in the base or primary metric units, other associated metric units are identified and determined by varying the magnitude of the base metric unit by powers of 10. Metric values are commonly shown in scientific notation form, (for example, $1 \times 10^4 = 10{,}000$; $1 \times 10^{-4} = 0.0001$).

Table 1 below gives a listing of prefixes used in the metric system, with their associated powers of ten, and their symbol.

TABLE 1

Prefix	Power of ten	Symbol
*deci	10^{-1}	d
*centi	10^{-2}	c
milli	10^{-3}	m
micro	10^{-6}	μ
nano	10^{-9}	n
pico	10^{-12}	p
femto	10^{-15}	f
atto	10^{-18}	a
*deka	10^{1}	da
*hecto	10^{2}	h
kilo	10^{3}	k
mega	10^{6}	M
giga	10^{9}	G
tera	10^{12}	T
peta	10^{15}	P
exa	10^{18}	E

* Use is to be avoided where practical. When expressing a quantity by a numerical value and a unit, a prefix should preferably be chosen so that the numerical value lies between 0.1 and 1000. In expressing area and volume, the prefixes hecto, deka, deci, and centi may be required, for example, square hectometer, cubic centimeter.

Table 2 below gives the symbols commonly used for various metric units.

TABLE 2

kg = kilogram
g = gram
mg = milligram
m = meter
km = kilometer
cm = centimeter
mm = millimeter
μm = micrometer (micron)
s = second
m^2 = square meter
cm^2 = square centimeter
mm^2 = square millimeter
m^3 = cubic meter
cm^3 or cc = cubic centimeter
mm^3 = cubic millimeter
L = liter
mL = milliliter
Pa = pascal
N = newton
kPa = kilopascal
MPa = megapascal

Table 3 below includes common conversions from the base and primary metric units (kilogram, meter, square meter, and cubic meter) to other associated metric units. Also listed are some common derived metric units.

TABLE 3

1 gram = 0.001 kilogram
1 milligram = 1×10^{-6} kilogram
1 milligram = 0.001 gram
1 kilogram = 1000 grams
1 metric ton = 1000 kilograms
1 kilometer = 1000 meters
1 centimeter = 0.01 meter
1 millimeter = 0.001 meter
1 micron (micrometer) = 1×10^{-6} meter
1 square kilometer = 1×10^{6} square meters
1 square centimeter = 1×10^{-4} square meter
1 square millimeter = 1×10^{-6} square meter
1 cubic centimeter = 1×10^{-6} cubic meter
1 cubic millimeter = 1×10^{-9} cubic meter
1 liter = 0.001 cubic meter
1 milliliter = 1×10^{-6} cubic meter
1 milliliter = 1 cubic centimeter
1 newton = 1 $kg \cdot m/s^2$
1 pascal = 1 N/m^2
1 kilopascal = 1000 pascals
1 megapascal = 1×10^{6} pascals
1 poise (absolute viscosity) = 0.10 $Pa \cdot s$
1 centistoke (kinematic viscosity) = 1 mm^2/s or 1×10^{-6} m^2/s

Some common U.S Customary units, with their corresponding base and primary metric unit equivalents, are given below in Table 4.

TABLE 4

1 pound (avoirdupois) = 0.453 5924 kilogram
1 ton (2000 lbs.) = 907.1847 kilograms
* 1 inch = 0.0254 meter
* 1 foot = 0.3048 meter
* 1 yard = 0.9144 meter
* 1 mile (5280 feet) = 1609.344 meters
* 1 square inch = 6.4516×10^{-4} square meter
* 1 square foot = 0.092 903 04 square meter
1 square yard = 0.836 1274 square meter
1 cubic inch = $1.638\ 706 \times 10^{-5}$ cubic meter
1 cubic foot = 0.028 316 85 cubic meter
1 cubic yard = 0.764 5549 cubic meter
1 pint (U.S. liquid) = $4.731\ 765 \times 10^{-4}$ cubic meter
1 quart (U.S. liquid) = $9.463\ 529 \times 10^{-4}$ cubic meter
1 gallon (U.S. liquid) = 0.003 785 412 cubic meter

(Exact equivalents are noted with an asterisk.)

Table 5 below lists commonly used conversions for U.S. Customary Units and metric units. Values are shown to the degree of accuracy which generally may be used to achieve satisfactory results. If more accuracy is desired, the values may be derived by using Tables 3 and 4.

TABLE 5

1 kilogram = 2.205 pounds
1 pound = 453.6 grams
1 ounce (avoirdupois) = 28.35 grams
1 ton (2000 lbs) = 0.9072 metric ton
1 meter = 39.37 inches or 3.281 feet
1 kilometer = 0.62 miles
* 1 mil = 0.0254 millimeters or 25.4 micrometers
* 1 inch = 2.54 centimeters or 25.4 millimeters
* 1 foot = 0.3048 meters
* 1 yard = 0.9144 meters
1 mile = 1.61 kilometers
1 square inch = 6.452 cm^2 or 645.16 mm^2
1 square foot = 0.0929 square meters
1 square yard = 0.836 square meters
1 cubic inch = 16.39 cm^3 or 16386 mm^3
1 cubic foot = 0.028 m^3 or 28317 cm^3
1 cubic yard = 0.765 cubic meters
1 liter = 1.06 quarts (U.S. liquid)
1 ounce (U.S. fluid) = 29.574 milliliter
1 pint (U.S. liquid) = 0.47 liter
1 quart (U.S. liquid) = 0.95 liter
1 gallon (U.S. liquid) = 3.79 liters
1 lb/ft^3 = 16.02 kg/m^3
1 kilometer/hour = 0.62 mile/hour
1 mile/hour = 1.61 km/hour
1 pound/square inch = 6.895 kPa
1 pound force = 4.448 newton
1 gallon/square yard = 4.527 $liters/m^2$
1 gallon/ton (2000 lbs.) = 4.173 liters/metric ton
1 gallon/cubic yard = 4.951 $liters/m^3$
1 pound/square yard = 0.542 kg/m^2
1 pound/cubic yard = 0.593 kg/m^3
1 pound/gallon = 0.120 kg/liter
1 cubic yard/square yard = 0.914 m^3/m^2
1 inch/mile = 0.0158 meter/kilometer

(Exact equivalents are noted with an asterisk.)

Table 6 below is from information contained in AASHTO M92 and ASTM E11 "Wire-Cloth Sieves for Testing Purposes", and shows Standard (Metric) and Alternative (U.S. Customary) sieve size designations. As shown, metric size designations are given in mm or μm. (1,000 μm = 1 millimeter)

8 inch diameter sieve = 203.2 mm diameter sieve
12 inch diameter sieve = 304.8 mm diameter sieve

TABLE 6

Sieve Designation		Sieve Designation	
Standard	Alternate	Standard	Alternate
125 mm	5 in.	2.36 mm	No. 8
106 mm	4.24 in.	2.00 mm	No. 10
100 mm	4 in.	1.70 mm	No. 12
90 mm	3-1/2 in.	1.40 mm	No. 14
75 mm	3 in.	1.18 mm	No. 16
63 mm	2-1/2 in.	1.00 mm	No. 18
53 mm	2.12 in.	850 μm	No. 20
50 mm	2 in.	710 μm	No. 25
45 mm	1-3/4 in.	600 μm	No. 30
37.5 mm	1-1/2 in.	500 μm	No. 35
31.5 mm	1-1/4 in.	425 μm	No. 40
26.5 mm	1.06 in.	355 μm	No. 45
25.0 mm	1 in.	300 μm	No. 50
22.4 mm	7/8 in.	250 μm	No. 60
19.0 mm	3/4 in.	212 μm	No. 70
16.0 mm	5/8 in.	180 μm	No. 80
13.2 mm	0.530 in.	150 μm	No. 100
12.5 mm	1/2 in.	125 μm	No. 120
11.2 mm	7/16 in.	106 μm	No. 140
9.5 mm	3/8 in.	90 μm	No. 170
8.0 mm	5/16 in.	75 μm	No. 200
6.7 mm	0.265 in.	63 μm	No. 230
6.3 mm	1/4 in.	53 μm	No. 270
5.6 mm	No. 3-1/2	45 μm	No. 325
4.75 mm	No. 4	38 μm	No. 400
4.00 mm	No. 5	32 μm	No. 450
3.35 mm	No. 6	25 μm	No. 500
2.80 mm	No. 7	20 μm	No. 635

TABLE 7

SI* (METRIC) CONVERSION FACTORS

(Approximate equivalents, except as noted)**

CONVERSIONS TO SI UNITS					CONVERSIONS FROM SI UNITS				
Abbrev./Symbol	*When you know*	*Multiply by*	*To find*	*Symbol*	*Symbol*	*When you know*	*Multiply by*	*To find*	*Abbrev./Symbol*
LENGTH					**LENGTH**				
in.	inches	25.4**	millimeters	mm	mm	millimeters	0.03937	inches	in.
ft.	feet	0.3048**	meters	m	m	meters	3.28	feet	ft.
yd.	yards	0.9144**	meters	m	m	meters	1.09	yards	yd.
mi.	miles	1.61	kilometers	km	km	kilometers	0.621	miles	mi.
AREA					**AREA**				
sq. in. or in^2	square inches	645.2	square millimeters	mm^2	mm^2	square millimeters	0.0016	square inches	sq. in. or in^2
sq. ft. or ft^2	square feet	0.093	square meters	m^2	m^2	square meters	10.764	square feet	sq. ft. or ft^2
sq. yd. or yd^2	square yards	0.836	square meters	m^2	m^2	square meters	1.19	square yards	sq. yd. or yd^2
	acres	0.405	hectares	ha	ha	hectares	2.47	acres	
sq. mi. or mi^2	square miles	2.59	square kilometers	km^2	km^2	square kilometers	0.386	square miles	sq. mi. or mi^2
VOLUME					**VOLUME**				
fl. oz.	fluid ounces	29.57	milliliters	mL	mL	millimeters	0.034	fluid ounces	fl. oz.
gal.	gallons (liquid)	3.7854	liters***	L	L	liters***	0.264	gallons (liquid)	gal.
cu. ft. or ft^3	cubic feet	0.028	cubic meters	m^3	m^3	cubic meters	35.315	cubic feet	cu. ft. or ft^3
cu. yd. or yd^3	cubic yards	0.765	cubic meters	m^3	m^3	cubic meters	1.31	cubic yards	cu. yd. or yd^3
MASS					**MASS**				
oz.	ounces	28.35	grams	g	g	grams	0.035	ounces	oz.
lb.	pounds	0.454	kilograms	kg	kg	kilograms	2.205	pounds	lb.
T	short tons (2000 lb)	0.907	metric tons****	t	t	metric tons****	1.102	short tons (2000 lb)	T
T	short tons (2000 lb)	0.907	megagrams****	Mg	Mg	megagrams****	1.102	short tons (2000 lb)	T

* SI is the symbol for the International System of Units.

** Exact equivalent.

*** Metric volumes greater than 1000 liters should be shown in m^3. The following conversion factors are helpful in making necessary conversions:
1 liter = 0.001 cubic meter; 1 cubic meter = 264.17 gallons (liquid).

**** 1 metric ton = 1000 kilograms = 1,000,000 grams = 1 Mg.

APPENDIX A3
July 15, 2005
(10 Pages)

EQUIPMENT CALIBRATION AND VERIFICATION

Equipment and apparatus used in testing materials must be calibrated or verified for accuracy on a regular basis to assure the equipment is giving reliable results.

Materials Group, Quality Assurance Section, has developed a listing of requirements, frequency, and the applicable test methods for the calibration and verification of various types of equipment. That listing is given in the following figures. The listing provided is not intended to address the calibration or verification of all equipment.

Related information on the calibration and verification of apparatus can be found in AASHTO R 18, "Establishing and Implementing a Quality System for Construction Materials Testing Laboratories".

Equipment and apparatus that may be affected by movement must be recalibrated after relocation.

ARIZONA DEPARTMENT OF TRANSPORTATION
MATERIALS GROUP
EQUIPMENT CALIBRATION & VERIFICATION

July 15, 2005

GENERAL LABORATORY TEST EQUIPMENT

EQUIPMENT	REQUIREMENT	MAXIMUM INTERVAL	TEST METHOD
Temperature Measuring Devices	Calibrate.	6 mo.	
Ovens	Check temperature settings.	4 mo.	
Vacuum System	Calibrate.	12 mo.	
Micrometers and Calipers	Calibrate.	12 mo.	
Mechanical Shakers	Check sieving thoroughness.	12 mo.	
Timers	Check accuracy.	6 mo.	
Straightedge	Check dimensions and planeness of edge.	6 mo.	
Constant Temperature Baths	Check temperature settings.	12 mo.	
Compression Testing Machine	Calibrate.	12 mo.	
Compression Testing Machine Bearing Blocks	Check critical dimensions. Verify planeness.	12 mo.	
Unit Weight Apparatus	Check critical dimensions and calibrate volume.	12 mo.	
Sieves	Fine sieves (openings < No.4) Check physical condition.	6 mo.	
	Coarse sieves (openings ≥ No.4) Check physical condition and dimensions of openings.		
Balances and Scales (and Masses)	Calibrate.	12 mo.	

FIGURE 1

ARIZONA DEPARTMENT OF TRANSPORTATION
MATERIALS GROUP
EQUIPMENT CALIBRATION & VERIFICATION

July 15, 2005

BITUMINOUS MATERIALS TEST EQUIPMENT

EQUIPMENT	REQUIREMENT	MAXIMUM INTERVAL	TEST METHOD
Kinematic Viscometer Tubes	Calibrate with reference fluid.	36 mo.	T-201, D2170
Vacuum Capillary Viscometer Tubes	Calibrate with reference fluid.	36 mo.	T-202, D2171
Saybolt Viscometer	Calibrate.	36 mo.	T-59, T-72, D244
Penetrometer and Needles	Calibrate penetrometer. Check needle condition and critical dimensions.	6 mo.	T-49, D5
Ductility Apparatus	Check critical dimensions of molds and speed of travel. Calibrate length-measuring device.	12 mo.	T-51, D113
Elastic Recovery Apparatus	Check critical dimensions of molds and speed of travel. Calibrate length-measuring device.	12 mo.	T-301, D6084
Flash Point – Cleveland Open Cup	Check critical dimensions.	12 mo.	T-48, D92,
Rolling Thin Film Oven	Calibrate flowmeter. Check shelf, carriage, rotation speed, and temperature.	12 mo.	T-240, D2872
Pycnometers (for Asphalt Specific Gravity)	Calibrate volume. Check critical dimensions and physical condition.	12 mo.	T-228, D70
Brass Rings &Assembly	Check critical dimensions.	12 mo.	T-53, D36
Collars & Floats	Check critical dimensions.	12 mo.	T-50, D139
Rotational Viscometer	Calibrate with reference fluid.	6 mo.	T-316, D4402

FIGURE 2

ARIZONA DEPARTMENT OF TRANSPORTATION
MATERIALS GROUP
EQUIPMENT CALIBRATION & VERIFICATION

July 15, 2005

BITUMINOUS MATERIALS TEST EQUIPMENT (CONTINUED)

EQUIPMENT	REQUIREMENT	MAXIMUM INTERVAL	TEST METHOD
Pressurized Aging Vessel (PAV)	Calibrate temperature and pressure.	6 mo.	R-28, D6521
Bending Beam Rheometer (BBR)	Calibrate with reference beam. Calibrate masses.	12 mo.	T-313, D6648
Dynamic Shear Rheometer (DSR)	Calibrate with reference fluid.	6 mo.	T-315
Direct Tension (DT) Test System	Calibrate as per manufacturer.	12 mo.	T-314
	Check crosshead speed of tensile loading machine.	Daily	
Load Cell, Displacement Transducer, and Temperature Detector for DT	Verify calibration.	6 mo.	T-314

FIGURE 3

ARIZONA DEPARTMENT OF TRANSPORTATION
MATERIALS GROUP
EQUIPMENT CALIBRATION & VERIFICATION

July 15, 2005

BITUMINOUS MIXTURES TEST EQUIPMENT

EQUIPMENT	REQUIREMENT	MAXIMUM INTERVAL	TEST METHOD
Rice Flasks	Calibrate volume.	12 mo.	AZ 417, AZ 806, T-209
Immersion Compression Molds and Plungers	Check critical dimensions.	12 mo.	AZ 802, T-165, T-167
Marshall Molds	Check critical dimensions.	12 mo.	AZ 410, AZ 422, AZ 815, T-245, T-283, D4867, D5581, D6926, D6927
ACFC Molds	Check critical dimensions.	12 mo.	AZ 814
Marshall Stability/Flow Breaking Head	Check critical dimensions.	12 mo.	AZ 410, AZ 422, AZ 815, T-245, T-283, D4867, D5581, D6926, D6927
Marshall Stability/Flow Compression Machine	Check speed of travel, verify load cell.	12 mo.	AZ 410, AZ 422, AZ 815, T-245, T-283, D4867, D5581, D6926, D6927
101.6 mm (4 inch) diameter Marshall Hammer (Mechanical or Handheld)	Check hammer face diameter, height of fall, and weight of hammer.	12 mo.	AZ 410, AZ 815, T-245, T-283, D4867, D6926, D6927
	Monitor through proficiency sample program.	Per proficiency sample frequency.	
152.4 mm (6 inch) diameter Marshall Hammer (Mechanical)	Check hammer face diameter, height of fall, and weight of hammer.	12 mo.	AZ 422, AZ 815, D5581

FIGURE 4

ARIZONA DEPARTMENT OF TRANSPORTATION
MATERIALS GROUP
EQUIPMENT CALIBRATION & VERIFICATION

July 15, 2005

BITUMINOUS MIXTURES TEST EQUIPMENT (CONTINUED)

EQUIPMENT	REQUIREMENT	MAXIMUM INTERVAL	TEST METHOD
Marshall Compaction Pedestal	Check that wooden post and steel cap are properly installed.	12 mo.	AZ 410, AZ 422, AZ 815, T-245, T-283, D4867, D5581, D6926, D6927
Ignition Furnace	Verify temperature settings. Calibrate balance.	12 mo.	AZ 427, T-308, D6307
Gyratory Molds, Ram Face, and Base Plate Face	Check critical dimensions.	12 mo.	T-312
Gyratory Compactor	Calibrate as per manufacturer.	6 mo.	T-312
Nuclear Asphalt Content Gauge	Check variability using 3-point calibration.	12 mo.	AZ 421
Freezer	Verify temperature settings.	4 mo.	T-283, D4867
Loading Strips for Resistance of Compacted Bituminous Mixtures to Moisture Induced Damage	Check critical dimensions.	12 mo.	T-283, D4867

FIGURE 5

ARIZONA DEPARTMENT OF TRANSPORTATION
MATERIALS GROUP
EQUIPMENT CALIBRATION & VERIFICATION

July 15, 2005

SOILS AND AGGREGATES TEST EQUIPMENT

EQUIPMENT	REQUIREMENT	MAXIMUM INTERVAL	TEST METHOD
Proctor Molds	Check critical dimensions and calibrate volume.	12 mo.	AZ 225, AZ 226, AZ 232, AZ 245, AZ 246, T-99, T-134, T-135, T-136, T-180, T-193, D558, D559, D560, D698, D1557
Proctor Rammer (Mechanical)	Check rammer face diameter and height of drop.	12 mo.	AZ 225, AZ 226, AZ 232, AZ 245, AZ 246, T-99, T-134, T-135, T-180, D558, D559, D698, D1557
	Monitor through proficiency sample program.	Per proficiency sample frequency.	
Proctor Rammer (Manual)	Check rammer face diameter, height of drop, and weight of rammer.	6 mo.	AZ 225, AZ 226, AZ 232, AZ 245, AZ 246, T-99, T-134, T-135, T-180, D558, D559, D698, D1557
Fine Aggregate Specific Gravity Flask	Calibrate volume.	12 mo.	AZ 211, T-84, C128
Conical Mold and Tamper	Check critical dimensions and weight of tamper.	24 mo.	AZ 211, T-84, C128
Coarse Aggregate Specific Gravity Apparatus	Check wire diameter, basket type, and water tank.	12 mo.	AZ 210, T-85, C127
Abrasion Machine	Check critical dimensions, and r.p.m.	24 mo.	T-96, C131
Steel Balls for Abrasion Machine	Check individual weight and charge weight.	24 mo.	T-96, C131

FIGURE 6

ARIZONA DEPARTMENT OF TRANSPORTATION
MATERIALS GROUP
EQUIPMENT CALIBRATION & VERIFICATION

July 15, 2005

SOILS AND AGGREGATES TEST EQUIPMENT (CONTINUED)

EQUIPMENT	REQUIREMENT	MAXIMUM INTERVAL	TEST METHOD
Resistivity Apparatus	Check resistivity.	6 mo.	AZ 236
pH Meter	Calibrate.	12 mo.	AZ 236, AZ 237
"R" Value Mold, Follower, and Standard Metal Specimen	Check critical dimensions.	12 mo.	T-190, D2844
"R" Value Machine	Calibrate.	12 mo.	T-190, D2844
Liquid Limit Device & Grooving Tool	Check wear and critical dimensions.	12 mo.	T-89, D4318
Compression or Loading Device	Calibrate.	12 mo.	AZ 249, T-216, T-236, D2435, D3080
Hydrometers	Check critical dimensions and correction factor.	24 mo.	T-88, D422
Sand Equivalent Apparatus	Check critical dimensions, weight of foot, and cycles.	12 mo.	AZ 242, T-176, D2419
Uncompacted Void Content Apparatus	Check critical dimensions and calibrate volume.	12 mo.	AZ 247, C1252
Flat and Elongated Proportional Caliper Device	Check critical dimensions.	12 mo.	D4791
Sulfate Oven	Check rate of evaporation.	12 mo.	T-104, C88
Sulfate Soundness Sample Containers	Check physical condition.	12 mo.	T-104, C88
Flakiness Index Slotted Sieves	Check critical dimensions.	12 mo.	AZ 233
Speedie Moisture Tester	Verify scale and gauge.	6 mo.	T-217
Sand Cone Density Apparatus	Calibrate	12 mo.	AZ 229, AZ 230
Sand Cone Density Sand	Determine density of sand.	As necessary.	AZ 229, AZ 230

FIGURE 7

ARIZONA DEPARTMENT OF TRANSPORTATION
MATERIALS GROUP
EQUIPMENT CALIBRATION & VERIFICATION

July 15, 2005

CONCRETE AND STRUCTURAL MATERIALS TEST EQUIPMENT

EQUIPMENT	REQUIREMENT	MAXIMUM INTERVAL	TEST METHOD
Air Meters (Pressure Type)	Calibrate.	3 mo. (See Note)	T-152, C231
Air Meters (Volumetric Type)	Calibrate.	12 mo. (See Note)	T-196, C173
Note: The individual test methods specify conditions that require recalibration, such as changes in elevation and rough handling.			
Slump Cones and Rods	Check critical dimensions.	12 mo.	T-119, C143
Cylinder Capping Plates	Check critical dimensions.	12 mo.	T-231, C617
Capping Material	Check strength.	3 mo.	T-231, C617
Climate Control Room	Temperature and humidity verified with recording thermometer.	6 mo.	T-104, T-106, T-107, T-129, T-131, T-137, T-153, T-192, C88, C109, C151, C185, C187, C191, C204, C311 C430
Rebound Hammer (Swiss Hammer)	Calibrate.	6 mo.	C805
Blaine Air Permeability Apparatus	Standardize (NIST 114).	30 mo.	T-153, C204
Vicat Apparatus and Vicat Ring	Check critical dimensions, physical condition, and weight.	30 mo.	T-131, C191
Cube Molds and Tampers	Check critical dimensions and physical condition.	30 mo.	T-106, C109
Autoclave Apparatus	Check critical dimensions, calibrate valve and gauge.	12 mo.	T-107, M-210, C151
Mechanical Mixing Apparatus	Check critical clearances and speed.	30 mo.	T-162, C305

FIGURE 8

ARIZONA DEPARTMENT OF TRANSPORTATION
MATERIALS GROUP
EQUIPMENT CALIBRATION & VERIFICATION

July 15, 2005

CONCRETE AND STRUCTURAL MATERIALS TEST EQUIPMENT (CONTINUED)

EQUIPMENT	REQUIREMENT	MAXIMUM INTERVAL	TEST METHOD
Flow Table, Mold, and Caliper	Check critical dimensions and weight. Standardize flow results.	30 mo.	M-152, C230
Length Comparators	Calibrate.	12 mo.	M-210, C490
Fineness Apparatus [45 µm (No. 325) Sieve, Gauge, and Nozzle]	Verify dimensions, calibrate nozzle, and check flow rate.	6 mo.	T-192, C430
	Clean sieve after 5 determinations. Calibrate sieve after 100 determinations.	--	
Single-Use Concrete Cylinder Molds	Check critical dimensions.	Each shipment.	T-22, T-23, C31, C39
Air Content, Hydraulic Cement Mortar	Calibrate measure.	30 mo.	T-137, C185
Standard Sand	Check for conformance with ASTM C778.	Each shipment.	C778
Rockwell Hardness Tester	Calibrate.	12 mo.	T-80, E18
Moist Room (Fog Room)	Verify temperature and humidity with recording thermometer.	6 mo.	M-201, C511
Storage Water	Check for lime saturation.	6 mo.	M-201, C511

FIGURE 9