ASPHALTIC CONCRETE

Description

ADOT has developed a wide variety of hot mix asphaltic concrete (AC) specifications. There are dense graded hot mixes (AC and ARAC) verses open graded hot mixes (ACFC and ARACFC). There are hot mixes (AC and ACFC) that use asphalt cement verses hot mixes that use asphalt-rubber (ARAC and ARACFC) for the binder. Some AC specifications use similar or even identical hot mix designs, but use different contract administration requirements. For example, "end-product" specifications allow the Contractor more freedom to control the production and placement of asphaltic concrete (416 is an example), but "method" specifications require the Contractor to follow prescribed procedures (407 is an example). Under end-product specifications, the Contractor is responsible for meeting the specified properties of the final product and has more flexibility in determining the best way to achieve those results.

Materials, testing procedures, and construction requirements are basically the same for the various types of hot mix asphaltic concrete (AC) specifications used by ADOT. For the sake of brevity, most inspection procedures can be found in this manual. Subsections 406, 407, 408, 409, 411, 413, 414, 416, and 417 of this manual will have additional instructions that supplement, or refer back to this "asphaltic concrete" section of the manual. The material has been condensed so the Inspector can quickly review the manual. Never assume the current project has the same specification as last time you used it. Always read the Special Provisions carefully to determine which specification(s) apply to the current project. This manual supplements, but does not replace the Standard Specifications, or project Special Provisions, and it is NOT a part of the contract. The Inspector should review the appropriate subsections of the Standard Specifications, project Special Provisions, and this manual at the start of each new project.

The 300 (Asphalt) Series of ADOT's construction training and certification manuals, as well as the Asphalt Institute publication listed at the end of this chapter, provide excellent information on the "how to" of asphalt paving and plant inspection. These references describe in great detail some of the key elements of asphalt paving and plant inspections. It is highly recommended that the Inspector who may be unfamiliar with recent changes in asphalt construction carefully review these references in conjunction with the material presented in this manual.

The Resident Engineer and Project Supervisor should have a basic understanding of the design concept behind each type of AC specification. The 406 AC specification is most commonly used in urban areas where the pavement surface must match numerous manholes, catch basins, and gutter lips; therefore spread is not enforced. The 406 specification was changed in the 2000 version of the ADOT Standard Specifications from a method specification to an end-product type. For larger rural projects, Specification 416 or 417 asphaltic concrete (also end-product specifications) are used. The 416 specification is currently used most frequently while 417 is expected to gain more in popularity in the next few years. Specification 408 and 413 are recycled and asphalt-rubber binder pavements respectively. The 409 specification is used for much smaller projects or areas where pavement structural strength is not as critical. Specification 407, 411 and 414 are asphaltic concrete friction courses (ACFC). These are open graded asphalt mixes that are porous and used as the final riding surface in areas where it is desirable to have enhanced wet-weather skid resistance. Specification 414 is the asphalt-rubber version of 407. Specification 411 is only used for miscellaneous work. ACFC 407, AC 409 and ACFC 411 paving specifications have several things in common.

They are "method" specifications where the Contractor must follow a set of prescribed procedures in producing and placing the asphalt. End-product 406, 416 and 417 specifications also use "method" requirements for compacting thin lifts (1 ½" or less).

They have very similar inspection procedures because the specification requirements are nearly identical for production and placement, only the material properties are different. The Resident Engineer is responsible for adjusting construction methods to fit field conditions.

Their method of measurement and basis of payment are similar.

The following table summarizes the various asphaltic concrete specifications.

Application	Specification	Description
Asphaltic Concrete (AC)	406 408 (recycled), 413 (rubber), 416 (end-product) 417 (end-product) SHRP	General purpose, hot mixed, paving materials used for leveling, and base courses as well as surface courses; broadly graded, dense mixes.
Asphaltic Concrete Friction Course (ACFC)	407 414 (rubber)	Open graded mixes used for riding surfaces only; expensive, but provide superior skid resistance when needed.
Miscellaneous Structural	409 (AC) 411 (ACFC)	AC with broad material bands and method rolling. Used for small project applications. Also used for special situations such as temporary detours and erosion control.

Asphaltic Concrete Mix Design Criteria

Specification bands are given to identify acceptable starting points for the mix design, they are NOT for production control. Once the mix design is complete and accepted there is no need for the inspector to refer to this subsection. End-product specifications, such as 406-7.04, will have production control bands (upper and lower limits) that are based on the target values given in the particular mix design for each individual project. Production control bands should not be confused with mix design specification bands. The production control bands are found in acceptance subsection of the specifications.

Mineral Aggregate

It is very important for the field office to verify Contractor compliance with all environmental regulations and permit requirements (local, state, and federal) for the mineral aggregate source(s). Refer to Section 1001 of both the Standard Specifications and this manual for further information and instructions. Verification is not required for established commercial sources.

As the Contractor produces the aggregate stockpiles, it is recommended that aggregate production be closely monitored and several samples be taken for gradation testing so that a correlation between the Contractor labs and the acceptance lab (regional, central or consultant lab) can be established. One of the biggest factors that affects the variations in asphalt mix properties is the aggregate crushing operation. Careful attention to this process on both the Inspector's and Contractor's part will definitely improve the chances of producing high quality asphaltic concrete for the project. Refer to the ADOT Training Manual 301R for more information on how to sample and test aggregate stockpiles.

Mineral Admixture

Typically the Department does not test mineral admixture unless a problem is suspected. Each load of mineral admixture delivered to the plant must be accompanied by a Certificate of Compliance and a Bill of Lading. The

Daily Mineral Admixture Report form is found at the end of this chapter.

Bituminous Material

Verification testing for asphalt cements is only required when the Contractor proposes to use a new source. If this is the case, the testing should begin as soon as possible. Typically, the Department will allow the Contractor to begin paving while verification testing is underway. Certificates of Compliance or Analysis must accompany each load of asphalt cement along with a weigh ticket or bill of lading.

Pretesting is only required in the event that serious problems have recently been experienced with a particular source. The ADOT Central Lab will determine this. They also will later determine when pretesting will no longer be required.

Mix Design Procedure

Specifications require the Contractor to be responsible for obtaining an acceptable material source and producing mineral aggregate that will meet all of the specifications. Utilizing mineral aggregate, crushed, processed, separated, and stockpiled, the Contractor shall formulate a mix design which meets all of the specified design criteria. The mix design shall be submitted to the Resident Engineer.

The Resident Engineer will submit the mix design to either a Regional Lab or the Central Lab for their review. Before the mix design is submitted, the Resident Engineer should verify that all the information contained in the mix design is complete and meets the requirements shown in the specifications. This includes checking for an approved testing lab, the test results on aggregates and the mix itself, a list of material sources and suppliers, and the inclusion of the required certifications. The best way to check a mix design is to carefully read the Special Provisions and Standard Specifications to verify that each provision is included in the mix design.

When a mix design is submitted, the Project Supervisor should have an Inspector witness the Contractor's sampling of the aggregate stockpiles.

If the Contractor proposes to use a previously used mix design, samples do not need to be submitted. The Contractor's paperwork still needs to be reviewed for compliance with the specification before forwarding to the Regional or Central lab. Occasionally the acceptance lab may want to sample the Contractor's aggregate stockpiles to ensure that each material still meets the original tolerances for gradation, fractured coarse aggregate particles (crushed faces), and sand equivalence.

Contractor Quality Control

The Resident Engineer should discuss the Contractor's quality control (QC) procedures at each weekly meeting.

<u>QC Procedures Checklist:</u>

1. Is the sampling frequency the same or greater than frequencies shown in the Standard Specifications or Special Provisions?

2. Are all the testing technicians ATTI certified with the appropriate certifications as required by the specifications?

3. Are all the elements of the Contractor's QC operations adequately discussed to evaluate conformance to current industry or ADOT practices (refer to ADOT's workbooks on bituminous

pavement construction and the appropriate Asphalt Institute publications)?

4. Are there plans to do adequate testing of the mineral aggregate during crushing? As previously mentioned, crushing has the biggest impact on mix variations.

5. What are their procedures for checking equipment such as the rollers, laydown machine, and plant both before and during production?

6. Are the lines of authority clearly established; who has the ability to reject unsatisfactory materials and workmanship?

ADOT Materials Group will provide guidance in evaluating the Contractor's quality control (QC) procedures. However, it is the Resident Engineer who must be satisfied that the Contractor's procedures (as described in the weekly meetings) are complete, credible, and an accurate portrayal of how the Contractor will actually carry out the work.

Inspectors should periodically check the Contractor's QC operations to ensure the procedures being used are as described in the specifications. QC may only run a portion of a test or sample at a different point in order to expedite results and make necessary corrections.

Construction Requirements

Construction requirements for an end-product specification are often similar to a method specification, but most of the responsibility is shifted to the contractor. End-product specifications allow the Contractor significant latitude on how asphaltic concrete is produced and placed, but some inspections at the plant and at the project site will still be required. It is always a good idea to document the contractor's materials handling procedures for future reference even if we do not control the individual steps of this process.

Pre-paving Meeting

It's always a good idea before any paving operation, whether it's an AC, ARAC, ACFC, ARACFC, or chip seal, to hold a pre-paving meeting. The intent of the pre-paving meeting should be to have the Contractor describe:

- how the plant and paving operations will be conducted;
- how the work will be sequenced;
- how quality control will be performed;
- what are the lines of authority;
- what equipment will be used; and
- what contingency plans are in place for equipment failures.

The Resident Engineer should be prepared to discuss how the work will be inspected, who will inspect it, and how acceptance sampling and testing will be performed. A sample agenda is shown in Exhibit 4-6.

Some important points to bring up at the pre-paving meeting include:

1. how the test results will be reported to the Contractor;

2. who will be responsible for each type of test

3. procedures for joint construction;

4. how grades will be controlled and what type of shoes or skis should be used on the paver;

5. any areas of the project that require special treatment such as hand work or blade leveling;

6. how random sample times and locations will be established;

7. establishing a correlation between Contractor's lab and ADOT's;

8. procedures for changing any of the target values.

Hot Plant Inspection

Hot plants used in the production of asphaltic concrete are of two general types: batch mix and drum mix (see Exhibit 4-7). The most important basic controls necessary to produce high quality asphaltic concrete within the required specifications are uniformity of grading, asphalt content, temperature, and moisture content.

If the Project Supervisor or Lead Inspector seriously doubts the ability of the Contractor's plant to consistently produce asphaltic concrete that will meet all of ADOT specifications, then a plant inspection should be performed to assure conformance with AASHTO M 156. This type of plant inspection should be the exception and not the rule and used only in situations where plant operations are clearly marginal or expected to be so. When deciding whether to place full time or part time Inspector(s) at the hot plant, the Resident Engineer or Project Supervisor should consider the following:

- the quantity of asphaltic concrete to be produced;
- the type of asphaltic concrete to be produced (for example 406, 409, 416, or 417);
- where the asphaltic concrete will be placed (mainline, shoulders, guardrail pads, etc.);
- the plant's hours of operation;
- the track record of the hot plant including the consistency in producing specification asphalt;
- the Contractor's quality control efforts;
- the current condition of the plant's equipment and the past performance of the plant operators;
- long haul times and the potential to overheat the asphaltic concrete;
- the materials and equipment requirements of the Inspector(s);
- the duties the Inspector(s) will perform and the procedures for acceptance and rejection of materials; and
- how the Inspector(s) will coordinate plant inspections with the site Inspectors and the acceptance lab.

The Inspector at the hot plant has a role in producing a quality pavement that is just as important as the Inspector behind the laydown machine. Experience in asphalt paving has shown that the highest quality pavements are the result of both a consistent mix that is produced at a skillfully operated plant and tight controls over placement conditions and compaction.

Although calibration of the plant is the Contractor's responsibility, scales need to be checked for certification before production begins. This is a matter of checking for a tag or sticker from the Department of Weight and Measures, or a designated authority. It is best to have the scales calibrated and certified after the plant has been up and running the trial batch or lot for a few hours or a day if possible. This allows time for the scales to "settle" into place as the vibrations of the plant and the weight of moving aggregate or trucks can cause settlement of the scale assembly.

Pre-paving Meeting
Project No. XXX-XXX-XX

07/25/00
8:00 AM to 9:10 AM
ADOT XXXXX Field Office

Facilitator:	Resident Engineer (RE)
Attendees:	RE, Superintendent, paving foremen, Project Supervisor, Inspectors, testers
Please review:	Section 406, the Construction Manual, Special Provisions, Project Plan Sheets X to Y, Materials Testing Manual
Please bring:	paving schedule, layout diagrams, TC plans, list of equipment, QC plan, sample forms and test reports, list of contacts

----- Agenda Topics -----

1.	Introductions	RE & Superintendent	8:00-8:03 AM
2.	Contractor's Schedule & Paving Layout	Superintendent	8:03-8:13 AM
3.	Haul Routes & Traffic Control	TC Coordinator	8:13-8:18 AM
4.	Proposed Equipment	Superintendent	8:18-8:23 AM
5.	Contingencies – damaged subgrade, equip., plant failures, weather	Superintendent & RE	8:23-8:30 AM
6.	Quality Control	QC Adminstrator	8:30-8:37 AM
7.	Inspection Procedures	Project Supervisor	8:37-8:42 AM
8.	Acceptance Sampling & Testing	RE & Project Supervisor	8:42-8:45 AM
9.	Subgrade/Base Acceptance	RE & Project Supervisor	8:45-8:48 AM
10.	Target Values & Changing Targets	RE	8:48-8:51 AM
11.	Other ADOT Concerns	RE	8:51-8:54 AM
12.	Safety	RE & Superintendent	8:54-8:58 AM
13.	Lines of Authority & Site Escalation	RE & Superintendent	8:58-9:02 AM
14.	Documentation & Payment Procedures	RE	9:02-9:05 AM
15.	Q&A / Adjourn	RE & Superintendent	9:05-9:10 AM

Other information

Observers:

Special notes:

Exhibit AC-1. Pre-paving Meeting Agenda

Fourteen Major Parts

1. Cold Bins
2. Cold feed gate
3. Cold elevator
4. Dryer
5. Dust collector
6. Exhaust stack
7. Hot elevator
8. Screening unit
9. Hot bins
10. Weigh box
11. Mixing unit - or pugmill
12. Mineral filler storage
13. Hot asphalt cement storage
14. Asphalt weigh bucket

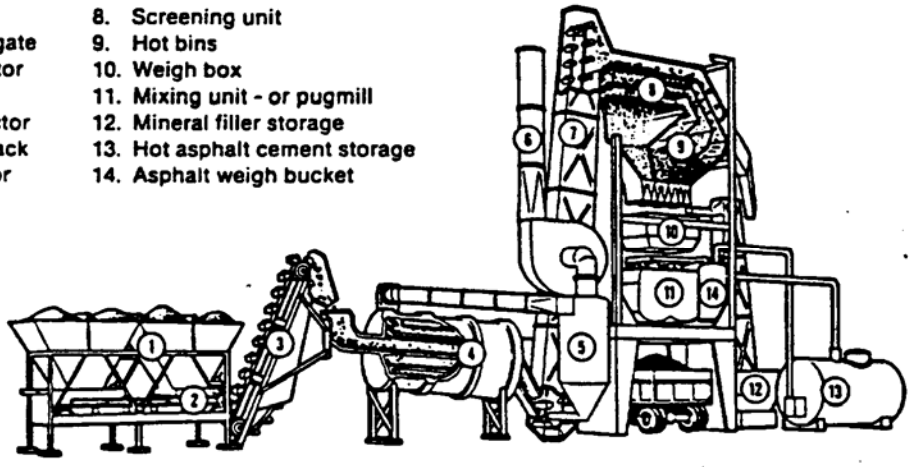

Cutaway View of Typical Batch Plant

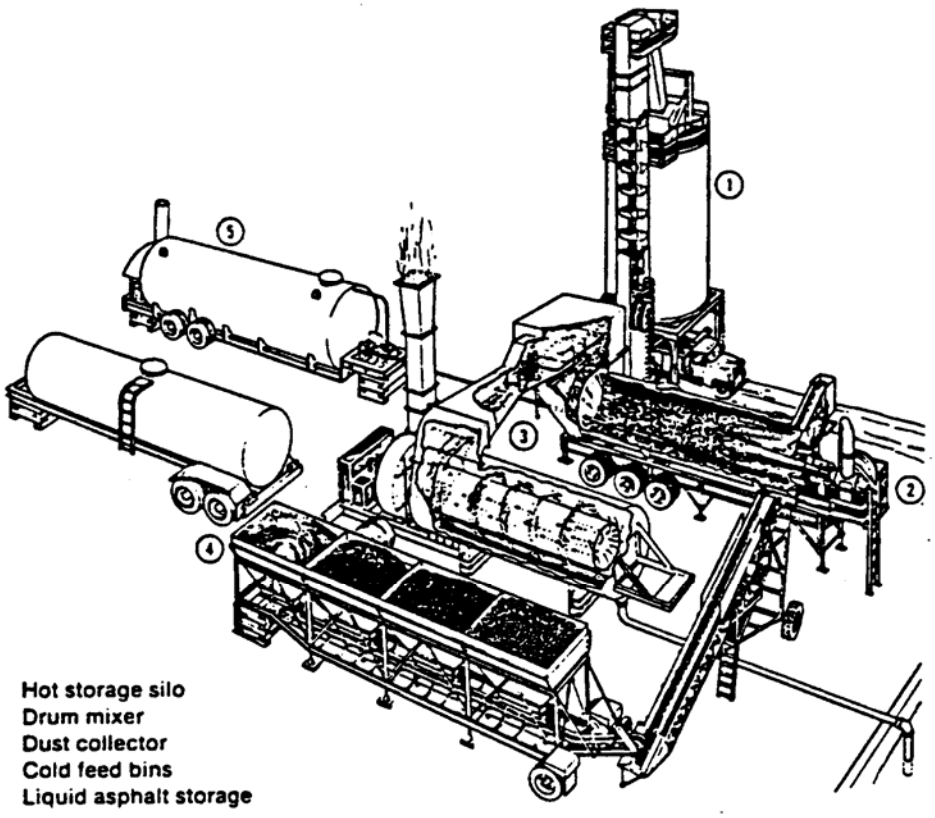

1. Hot storage silo
2. Drum mixer
3. Dust collector
4. Cold feed bins
5. Liquid asphalt storage

Typical Drum Mix Plant

Exhibit AC-2. Batch And Drum Mix Plants

Control of the mineral admixture is another area that needs to be carefully checked. In a drum mix plant, the aggregate and mineral admixture is mixed together in a pugmill before being loaded into the drum. In a batch mix plant, the admixture is loaded into the batching pugmill and mixed with the dried aggregate before the asphalt cement is added.

Daily documentation of the amount of mineral admixture incorporated into the mix must be furnished. Prior to paving, the Inspector should verify:

- the positive signal system and limit switch on the admixture feeder is working so when no admixture is fed into the pugmill, the plant automatically shuts down;
- there is a positive means of weighing the admixture before it goes into the pugmill; and
- calibration of the admixture feeder (the Inspector should do a manual calculation to prove that the correct number of pounds of admixture is being added to each ton of asphaltic concrete).
- That the admixture will be introduced without significant loss of the product during mixing.

Pugmills should be checked to ensure that the material is carried at least 3 feet (1 meter) horizontally and that the blades are not overly worn.

The pyrometer at the discharge chute needs to be checked periodically to ensure it is accurately recording temperatures and the temperatures are within the specified maximum limits. Typical maximum temperature limits are 325°F (160°C) for AC (some high temperature PGs such as 76-XX may require 335°F [166°C]), and 350°F [175°C] for ARAC.

The cold feed sampling device should be checked to ensure that a representative sample can be obtained safely from the belt discharge per Arizona Test Method 105 while the plant is running. If not, the belt should be stopped and samples taken in accordance with Arizona Test Method 105. The stopped belt method is the control method in case of disagreement between the results.

The following subsections describe how each element of a hot plant operates and how to inspect it

A. Stockpiles and Cold Feeders

In order to prevent intermingling of material in the stockpiles, it is necessary to have good bulkheads or adequate separation of stockpiles. A bulkhead that does not prevent intermingling of the aggregates is of little or no value. The bulkhead should start at ground level and extend above the highest contact point of either stockpile. It should also be long enough to keep the piles completely separated.

Uniform stockpiles and good feed control are also important because a weight sensor on the feed belt monitors the aggregate flow and adjusts the asphalt cement being added.

On drum mix plants, the cold feed control is especially important because it is the only gradation control in the plant and for ACFCs this is the point of acceptance for gradation. The stockpiles for drum mix plant operation must be very uniform. If there is moisture in the sand, it may not flow freely. A vibrator may be necessary to keep the damp sand from "bridging" over the gate opening. Frozen sand may also give similar trouble.

If using a batch plant, the Resident Engineer must verify the batch weights used in sampling a batch-type plant so that the composite grading can be accurately calculated.

B. Sampling of Mineral Aggregate

All samples for the purpose of accepting materials shall be taken from the hot bin, cold feed, or stockpile. The sample size shall reasonably conform to the minimums recommended by the Sampling Guide Schedule.

Batch Mix Hot Plants: The Inspector shall observe the Contractor sample each size as the mineral aggregate is falling from the hot bin into the weigh hopper.

Drum Mix Plants: Samples of the mineral aggregate shall be taken after the various sizes are combined, by interrupting the full flow of material as it is delivered to the mixer. The Contractor shall take the sample under the observation of the Inspector and shall immediately furnish it to the Inspector.

The mechanical or manual device used for sampling must interrupt the full flow of material. It will be considered acceptable if the Contractor can demonstrate to the Resident Engineer that the full flow of material can be interrupted in such a way that all portions of the flow are diverted for an equal amount of time. The ideal sampler moves laterally across the flow without excessively disrupting the large particles. This type of device satisfies the requirements, providing its speed is uniform through the flow (see Exhibit 4-8).

Other devices that travel into the flow and back out along a path perpendicular to the flow obviously have a “move in” time, a “residence” time, and an “exit” time. Considerable judgment may be needed to determine if the sum of the move in and move out time in ratio to the residence time is excessive. The ratio of travel time to residence time should be minimized by fast-acting systems such that the combined travel time is not greater than 10% of the residence time.

If a representative sample cannot be obtained while the belt is in motion, then the Inspector has the right to direct the Contractor to stop the belt so that a representative sample may be removed from a stationary section of the belt as per Arizona Test Method 105. Comparative samples could be taken at the start to reasonably assure that the sampling device does not create unacceptable systematic error (i.e., catch more rock or fines than is truly flowing into the mixer).

It will be necessary to reduce the field sample conforming to the required minimum size by a process described in AASHTO T-248. The portion selected for testing shall reasonably conform to the minimum size specified in the respective test method.

C. Drum mixer

The Drum mixer (see Exhibit 4-7) is a revolving steel drum or cylinder where aggregate is dried and heated by burning fuel oil or gas in the upper end and the asphaltic concrete is mixed in the lower end. This drum must be set up with some amount of slope along the axis of the drum or the material will not move through it efficiently. The drum at a batch plant is shorter since it is only for drying material, not mixing. The cylinder walls have cups or channels called "flights" or "lifting flights" spaced at intervals on the inside wall of the cylinder, in rows down the full length of the drum. The flights raise the aggregate as the cylinder turns, and drop the aggregate through the hot gases. The heat is generated at the burner. Air is necessary to atomize the fuel oil as it is ejected from the burner nozzle to provide complete combustion, and to provide draft or suction necessary to carry combustion gases through the drum. Mixing flights are positioned at the lower end of the drum.

When the fuel oil is not completely burned, it tends to deposit a black, oily residue on the hot aggregate particles making it difficult to coat them with asphalt. An indication of incomplete combustion of fuel oil in the drier is heavy, black smoke coming from the drier exhaust stack. Indications of insufficient draft through the drier are spasmodic "puffbacks" at the combustion end of the drier, or flame entering the drum only a short distance. The flame should penetrate about one-third the length of the drum.

Common drum mix plant problems involve temperature. Either it fluctuates, or it is too high or too low. The main causes for these problems will usually be found in the cold feed. It could be moisture variation in the cold aggregates, variation in the feed rate, overloading the drier beyond its capacity to dry and heat, or a change in the character of the material. Additional causes that may contribute to the problem are over control of the burner flame, insufficient draft, and an inaccurate heat-indicating device.

D. Heat Indicating Device

It is desirable to hold the temperature of the aggregate in the drier to the minimum that will effectively dry it, allow the individual particles to be uniformly coated with asphalt, and allow for the mix to arrive at the job site at the recommended temperature. The temperature-indicating device is probably the most important single plant control accessory because the service life of the pavement is shortened if the asphalt is overheated. The following types are common:

Thermometers (mechanical). Metal thermometers with large face dials are inexpensive, rugged, durable pieces of equipment that can be easily replaced.
Indicating Pyrometers (electrical). This type of heat indicating device is generally a galvanometer that measures a very small electrical current induced by the heat of the aggregate passing over the sensing element.
Recording Pyrometers (electrical). This type of instrument is similar to the indicating pyrometer except that the head is a potentiometer. Temperatures are recorded on paper in graphic form providing a permanent record. The contractor is required to give a copy to ADOT at the conclusion of each shift of production.

All asphaltic concrete specifications except miscellaneous ACs (409 & 411) require a recording pyrometer.

The sensing element should be installed at the discharge end of the drier in such manner that the element protrudes into the flow of the mix. It may be held by setscrews inside a short sleeve that is attached to the walls of the drier discharge chute. It should be located so that it is not affected

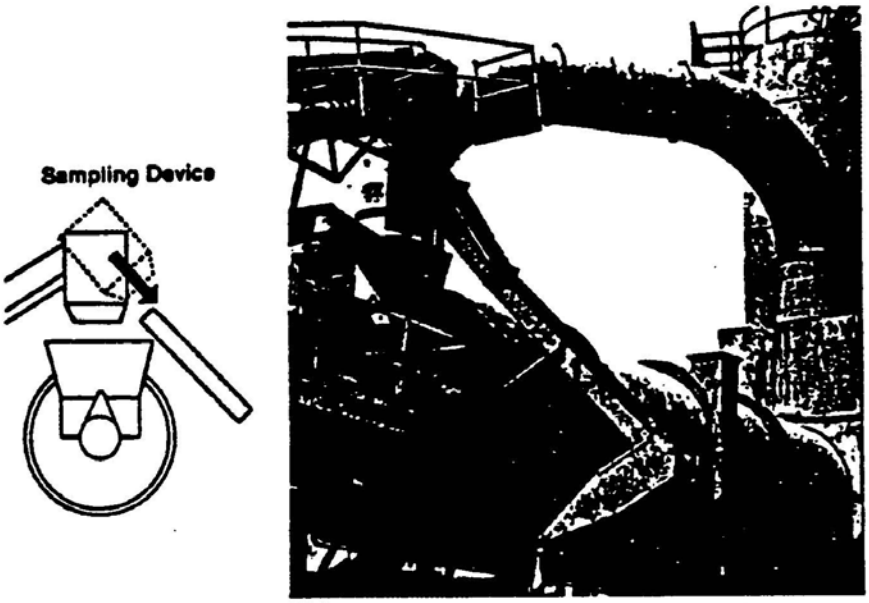

FIGURE 4.60 - Typical Sampling Device

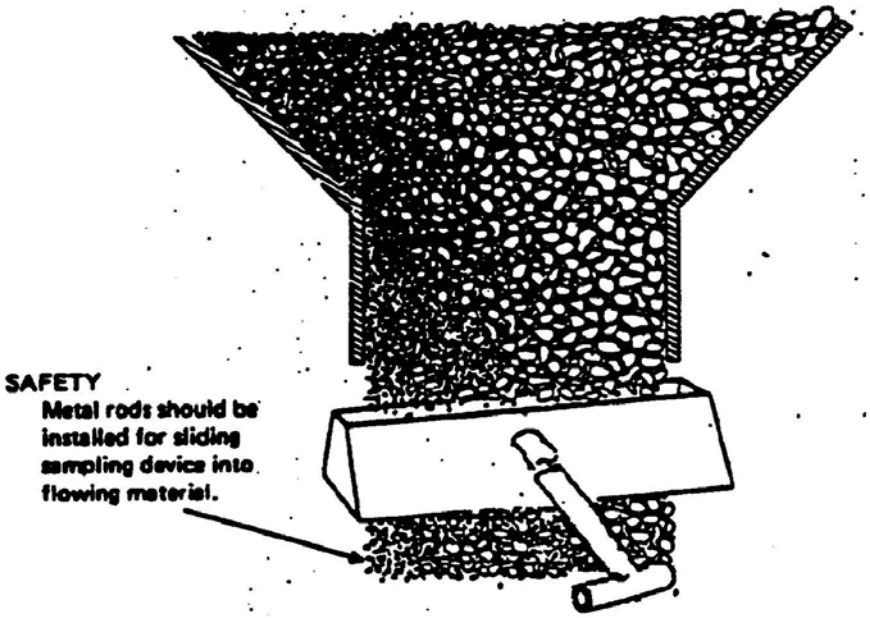

Figure III-16—Correct use of sampling device

Exhibit AC-3. Hot Plant Sampling Device.

by the reflected heat of the burner and is insulated from the sleeve. The sleeve may shield the element but should not delay, distort, or alter the accuracy of the temperature readings.

To check the accuracy of the heat-indicating device, an accurately calibrated thermometer and the heating device are inserted together into a hot asphalt bath that is slowly heated above the temperature range expected of the dried aggregate. The readings of the two instruments are compared.

E. Dust Collector

Exhibit 4-7 shows typical dust collector systems. The purpose of the dust collection system is:

1. Collect the fine aggregate particles floating about in the drum and various parts of the plant.
2. Provide the draft that carries the hot gases through the drum via the blower for the dust collector system.

Dust collectors may be the bag house type, cyclone type, or one of many different styles of wet collector.

The specifications require that the dust collector system be capable of removing dust from the aggregate, either wasting this material, or returning it uniformly to the mixer when authorized by the Department. The dust in the mix is an important fraction of the aggregate that must be strictly controlled to narrow tolerances

F. Aggregate Bins

Exhibit 4-7 shows typical aggregate bins for both drum mix plants and batch plants.

The specifications require low-level bin detectors on both batch type and drum mix type plants. Make certain that this equipment is in place and that it is operating before allowing the plant to start. On drum mix plants, the device will automatically stop the feed of aggregate and asphalt to the mixer when the level of the aggregate in any bin approaches the strike off capacity of the feed gate. On batch plants the device consists of a mechanical arm or a set of lights, one for each bin.

Typical aggregate bin problems include a shortage/excess of material in one bin or another, worn gates at the bottom of the bin which allow a leakage of aggregate into the weigh hopper, and sweating of the bin walls. This sweating condition normally occurs only at the beginning of a day's operation and does not cause much trouble after the bins reach a stable temperature.

In batch plants, the screened aggregate falls from the screens to the hot bins below. The purpose of the hot bins is to hold the heated and screened aggregate in the various desired size fractions for proportioning into the mix. It is a good practice to verify the overflow chutes from each hot bin are functioning properly and that the bin partitions have no holes in them so that the material from one bin cannot flow into and contaminate the material in an adjacent bin.

G. Mineral Admixture Feeders

Most aggregate sources in Arizona have an adequate amount of fines (-#200 [-75 m] sieve) to provide dense asphaltic concrete. More often than not, dust has to be removed by the dust collector or other means in order to maintain sufficient air voids in the compacted pavement.

Mineral admixture, in the form of dry lime or cement, may be added to the mineral aggregate for the purpose of improving the affinity of the aggregate for asphalt.

Control of the mineral admixture is another area that needs to be carefully checked. In a drum mix plant, the aggregate and mineral admixture are mixed together in a pugmill before entering the drum. In a batch mix plant, the admixture is loaded into the batching pugmill and mixed with the aggregate before the asphalt cement is added. Some specifications, such as subsection 406-6, describe in detail the requirements for admixture mixing and control. Before paving, the Inspector should check for:

- a working interlocking device on the admixture feeder, so if no admixture is fed into the pugmill, the plant shuts down;
- a positive means of weighing the admixture before it goes into the pugmill; and
- calibration of the admixture feeder, the Inspector should do a manual calculation to prove that the correct number of pounds of admixture is being added to each ton of asphaltic concrete.

H. Sampling Device

On batch mix plants, the samples of aggregate are taken from each bin as they are discharged into the weigh hopper. The specifications require that adequate facilities be provided for sampling at this location. Make certain that the facility is safe and also that representative samples are assured.

Sampling equipment should be checked with the plant operating before production is started.

As mineral aggregate flows over the plant screens, the finer particles fall through the screens first and deposit near the wall of the bin next to the head of the screen. The coarser material will travel farther across the screen and deposit on the other side of the bin. This is most common in the fines bin. This tendency is important to remember when analyzing the methods used to obtain a representative sample of the material in the bins.

It is recommended that a sampling device be used similar to that illustrated in Exhibit 4-8. Using a shovel or pan as a means of obtaining samples is not allowed because of the problem of obtaining representative samples.

On some batch mix plants, the sampling devices are a part of the plant and representative samples are secured from the material diverted into the separate compartments of the hopper.

On drum mix plants the samples are taken from the cold feed prior to the addition of the mineral aggregate from the stockpiles.

I. Asphalt Storage Tanks

All asphalt storage tanks, feeder lines, and pumps (See Exhibit 4-7) must have heating devices and insulation to effectively maintain the asphalt at the desired temperature. The temperature of the stored asphalt should be near the required mixing temperature of the finished mix and should be checked frequently. Return lines discharging into storage tanks must be submerged below the asphalt surface level in the tanks at all times. This prevents oxidation and hardening of the asphalt since it has less exposure to oxygen in the atmosphere.

Complete permanent records shall be kept of all asphalt cement delivered to the storage tanks as well as the quantity of asphalt used during the paving operation.

J. Avoiding Incorrect Asphalt Content

One of the most common causes of failure in asphaltic concrete pavements is incorrect asphalt content and the associated variability in the effective voids. The reasons for incorrect asphalt content can stem from inaccurate

scales (either asphalt or aggregate), variations in aggregate grading, porosity of aggregate, incorrect mix design values, or poor interpretation of preliminary test results.

Constant attention must be paid to the scales at the asphalt plant to be sure they are functioning properly. It is a good practice to check how the asphalt cement is weighed and dispensed into the mix. The plant operator should show the Inspector how the asphalt cement is weighed and the dispenser calibrated. At a batch plant this will be a type of weigh bucket with it's own scale dial. On a drum mix plant the continuous flow is measured with a mass-flow meter in the supply line. Asphalt cement weights should be checked against those computed from the mix design. Whenever it is suspected that the asphalt delivery system is malfunctioning, tests should be run to verify the condition of the system.

K. Batch Mix Plant

Exhibit 4-7 shows a typical batch plant. The aggregate travels up a hot elevator to the screen deck of the asphalt plant. The screen deck separates the aggregate into sizes and drops each size into the proper bin. The arrangement of screens on the screen deck of a plant is usually such that the fine material is screened first, followed by increasingly larger sizes. The capacity of the fine screen is generally the limiting factor in plant production rates. A ¼ inch screen will separate approximately one ton per hour per square foot of screening area. When an attempt is made to increase production beyond the capacity of the screens, carry-over (aggregate that does not get screened, but spills over into the next bin) occurs. Carry-over can be corrected by decreasing the rate of production, increasing the available screening area, or modifying the screen sizes and arrangement.

The capacity of the screens will be exceeded at normal production rates if the openings become plugged with material. This condition demands constant inspection and cleaning of the screens involved. Someone should inspect the screens at least once each day to make sure they are not plugged and to see that they are cleaned when necessary.

Positive evidence of carry-over is obtained from the individual bin gradation analysis. Even before sieve analysis, excessive carry-over will show during visual inspection of aggregate samples drawn from the bins. In the event such an observation is made, or a carry-over shows from test results, the material affected should be completely discharged and wasted, and the condition corrected.

The purpose of batch plant scales is to weigh the batch ingredients. The aggregate hopper and the asphalt bucket have separate scale systems. The indicators for the scale systems are usually load cells. One of the most common causes for scale malfunction is the buildup of asphalt, dust, etc. In addition, particles of aggregate can lodge in the scale supports and obstruct the free movement of the levers. Sometimes the asphalt bucket or the weigh hopper for aggregate will not swing freely, causing it to bind against another plant part.

The coarser aggregate is withdrawn from the batch plant bins first so it is deposited at the bottom of the weigh hopper and reaches the pugmill first. The tips of the mixer paddles readily pick up the coarse aggregate allowing it to scour the bottom of the pugmill, and through the movement of the coarse aggregate, to also ensure a thorough mixing of the entire mass. The sand is last because, if it were withdrawn first, it would be deposited on the bottom of the weigh hopper with the coarse aggregate on top. If the pugmill is worn so that there is an excessive clearance between the paddle tips and the liner, the sand could lay in a dead area below the reach of the paddle tips and never be picked up and mixed into the batch.

An obscure, infrequent situation may arise that could influence the bin withdrawals. In the event the aggregate being used in the mix is of low specific gravity, a much larger volume of material is needed for the same batch weight. This can cause insufficient weigh hopper capacity. If the sand is on the bottom, the coarse aggregate

will sit on top rubbing against the bin gates, thereby, preventing further flow of material into the weigh hopper. This results in insufficient coarse aggregate in the batch, and an inaccurate scale reading. If, on the other hand, the coarse aggregate is withdrawn first, the smaller aggregates will infiltrate into the spaces, thereby, taking up less of the volume available in the weigh hopper.

At this point in the batch plant production, a timing device indicates how long the combined materials stay in the pugmill mixer. The Inspector should note exactly when the timing device begins its operation. Most plants are equipped so that the timing cycle starts when the weigh hopper gates open to allow material to fall into the pugmill. This means that the mixing timing cycle has started before all of the material has entered the pugmill. It normally takes about five seconds for all the material to fall from the hopper to the pugmill. These five seconds should be deducted from the actual mixing time. Mixing time should be computed only from the time that asphalt is introduced into the pugmill. From this, it can be seen that if the timer is set for a 35 second mixing time, the actual mixing time will be approximately 30 seconds. In most cases, this need not be considered a critical item as long as the Inspector realizes what is happening. The actual mixing time should be only that length of time necessary for complete coating of the aggregate particles with asphalt, and to provide a uniform homogeneous mixture. The shorter the time that the mixture remains in the pugmill, the less oxidation of the asphalt will occur. The longer the mix remains in the pugmill at elevated temperatures, the harder the asphalt becomes and, theoretically, the shorter the service life of the finished pavement.

It is important that the proper material level be maintained in the pugmill mixer. When a mixer is overloaded, a part of the material will float above the paddle tips and not be drawn down into the mixing mass. Conversely, a mixer with too little material in it will not thoroughly mix, as the tips of the paddles will rake through the material, providing little mixing action. With a proper size batch it should be possible to see the paddles as they rotate. In no instance should the depth of material in the mixer, during operation, be such that the paddles are invisible. Under most conditions, it is good practice to keep the batch sizes close to the capacity recommended by the plant manufacturer.

It is a good practice to make frequent visual checks of the mix as it is being discharged from the pugmill to the truck, and observe the top of the load as it leaves the plant. Any serious problems in the mix will probably be visible (such as segregation, too much/little asphalt, too much/little heat, chunks of deleterious materials, or poor mixing). The Inspector should attempt to watch as many of the discharged loads as possible, since early rejection or sampling of problem loads is clearly to everyone's benefit. The Contractor may not appreciate this until it saves him or her several rejected loads at the paving site.

Some of the common causes for visible non-uniformity in the completed mix are as follows:

- insufficient mixing time;
- poor distribution of asphaltic concrete across the pugmill;
- poor distribution of fines in pugmill;
- improper aggregate temperature;
- worn paddles or liner in the pugmill; and
- leaking pugmill gate.

The finished product everyone is striving for is an asphaltic concrete mixture:

- with well blended aggregate having a uniform asphalt content;
- mixed at a minimum temperature to allow thorough coating of the aggregate particles with the asphalt; and
- hot enough to allow for proper handling and compacting on the roadway.

This is a difficult responsibility for both the producer and the Inspector at the plant.

L. Drum Mix Plant

The principle of the drum mix plant is totally different from batch mix plants. Exhibit 4-7 shows a typical drum mix plant. There are several drum mixer designs, but they all have the common feature of simultaneous drying, heating, and asphalt coating of the aggregate. The plant consists of a cold feed system, pugmill, asphalt storage, dust collection, drum mixer, and a surge silo.

Aggregate gradation is controlled entirely by the cold feed. To be adequately controlled at the cold feed, it is imperative that very close production control is maintained when manufacturing and stockpiling the aggregate. Multiple bin feed arrangements are usually provided using individual gate controls adjustable from the control console. The aggregate feed belt incorporates a belt scale that continuously monitors the tons per hour being delivered into the plant. This aggregate delivery information is used in the asphalt pump control to meter the correct amount of asphalt cement into the mix. The belt scale must be certified for accuracy and kept in good working condition.

It is important that the proper material level be maintained in the pugmill mixer. When a mixer is overloaded, a part of the material will float above the paddle tips and not be drawn down into the mixing mass. Conversely, a mixer with too little material in it will not thoroughly mix, as the tips of the paddles will rake through the material, providing little mixing action. With a proper size batch it should be possible to see the paddles as they rotate. In no instance should the depth of material in the mixer, during operation, be such that the paddles are invisible.

The initial drying is accomplished in the upper end of the drum and as the drum rotates the aggregate falls (advances) to the lower end. In a parallel flow drum (Exhibit 4-7) some type of shielding is used to prevent the direct flame from extending into the area where the asphalt is added. In a counterflow drum the burner extends into the drum such that the asphalt is added behind it.

The asphalt spray bar can be moved within the drum to adjust for particular problems such as a need to capture more fines or asphalt smoking because of hot aggregate. When the aggregate reaches the asphalt spray pipe, it has not lost all of its moisture. The small amounts that remain are sealed into the mix when it is compacted.

The time the aggregate is in the drum can be controlled to some extent by changing the slope of the drum. Adjusting the drum slope involves adjustments to plant accessories so it is usually not done except during the initial setup. Although it is not a popular adjustment, the Resident Engineer should know that it can be done and may effectively solve some problems.

The plant control console can adjust the aggregate asphalt proportioning, burner control, and pollution control.

When the plant is operating close to the pollution limits, small changes in the plant operation or materials can cause failure to meet air quality standards. The pollution control equipment used on a drum mix plant is similar to the types available for other kinds of plants.

Placing and Finishing

A. Plans and Specifications

ADOT field personnel are responsible for most of the inspection and quality control when acceptance is based on method specifications. One primary benefit of an end-product specification is the limited inspection that is required by ADOT field personnel. Since the Contractor has the responsibility for quality control, the Contractor's

staff should do most of the routine inspection work. ADOT Inspectors still have some involvement during paving, but most of their effort should be focused on ensuring that both the Contractor's production and QC work are done properly and consistently.

The first thing the Project Supervisor and Inspectors should do is become completely familiar with the plans and specifications for the job. This may sound odd as a beginning statement in describing the duties and functions of paving inspection. However, too frequently it has been observed that the Inspector is merely satisfied that the material is being placed just like on the last project. The common assumption that this job specification is exactly the same as the last one is rarely true. Whether the specification is the same or not, it should be reviewed in the light of what is to be accomplished on the present job. Even with end-product specifications it is not sufficient that he or she merely sit by and observe operations as they progress. The Inspector must take an active part in the actual functioning of the paving operation. The Inspector should be adequately equipped with the tools for the job, such as a notebook, thermometers, string lines, straight edge, etc.

It is important for the Resident Engineer to allow adequate time for the Project Supervisor and the assigned Inspectors to review the Standard Specifications, the Project Plans, Special Provisions, ADOT's training manuals on asphalt paving, and this chapter of the Construction Manual. In fact, the Resident Engineer should actively encourage the inspection staff to review all these documents prior to paving. An Inspector's effectiveness can be increased enormously if that Inspector has carefully read all the information available on the items of work to be inspected.

The Inspector should also have a working knowledge of the construction equipment being used by the Contractor. This means that he or she should know enough about it to be able to determine by visual inspection whether or not the equipment is in good mechanical condition and properly adjusted.

In addition to being present to see that the job specifications are complied with, the Inspector should always be alert to see that the construction crew follows good practices and that workmanship is not substandard. Each little detail of workmanship in itself may seem insignificant, but when all the details are added together, they assume considerable magnitude. It is the attention to these seemingly minor details that can make the difference between a poor job and a good job.

B. Job Site Safety

Job site safety must be observed. Often Inspectors and construction workers are so absorbed in the details of their work that they overlook basic safety precautions and may take unnecessary risks. Project Supervisors should be especially on alert for safety violations during the first few days of paving. Until the operation settles into a routine where everyone is aware of what others are doing, the risk of an accident is high. In addition, it's always good to emphasize safety at the very beginning of every project so that no bad habits are overlooked.

C. Traffic Control

Before the paving begins, the Project Supervisor or Lead Inspector must ensure that the work can be done without jeopardizing the safety of the traveling public. The Contractor must have traffic control devices set in place in accordance with an approved traffic control plan. Field adjustments to the plan are often needed to enhance safety and improve the continuity of the paving operation. The Project Supervisor should drive through the project a few times with the Contractor's traffic control coordinator to check for conformance with the plan and make any necessary adjustments (see Subsection 701 of this manual for further instructions).

D. Subgrade and Base

Inspectors need to pay close attention to pavement subgrade and base. By now, the subgrade or base should

have been inspected and approved. The Inspector's job is to ensure that the subgrade and base are not damaged, disturbed, or contaminated by the Contractor's paving operation. Talk to the Contractor ahead of time about how delivery trucks will enter the project and reach the laydown machine. What measures are going to be used to ensure that no damage to the base occurs? What will be done if damage does occur?

The Inspector will make certain that the surface upon which the asphaltic paving is to be placed is reasonably true to grade and cross section, being sound and with no soft areas or excess loose material. The smoothness of the finished riding surface is dependent to a large degree on the smoothness and firmness of the grade on which the paving is placed. Asphalt is considerably more expensive than base or subgrade materials; therefore, it should not be used as a leveling course over the less expensive materials.

It is very beneficial for the Contractor and the Inspector to pay attention to base density ahead of the paving train since this can in some cases affect the AC density. Any areas that appear to move under normal loads are not stable and, therefore, unsuitable, necessitating corrective action (aeration, re-compaction, replacement, prime coat, cement/lime treatment, etc.). It is not acceptable to pave over these areas.

Occasionally, the subgrade, base, or milled pavement will become damaged by heavy equipment traffic. The Project Supervisor, Inspector, and Contractor should meet before paving begins to discuss how damaged areas will be identified and repaired. It is important to have a contingency plan in place with the necessary resources so as to not unduly hold up the paving operation.

One last point on subgrade concerns compaction problems with the AC mix. Often, failing compaction densities will be blamed on less than perfect subgrade conditions. Typically, the responsibility is the Contractor's; however, the Inspector should periodically observe the condition of the subgrade and note it in the daily diary. Observe the delivery trucks rolling over surface— check for pumping or deflection of the base or subgrade. Report the observations in the diary. If you observe other disturbances report them. This information could be invaluable in resolving pavement problems at a later time.

E. Scale-person (when applicable)

The scale-person will check weigh procedures at the hot plant and sign each delivery ticket. The scale-person will check delivery trucks for conformance with MVD length and weight restrictions, as well as authenticating tare weights shown on the delivery tickets. Refer to Subsection 109.01 for further information.

F. Transporting Asphaltic Concrete

The asphaltic concrete is normally transported from the central mixing plant to the spreading operation in trucks. Uniformity as to type and size of hauling equipment on the job is desirable and is often necessary for a given operation. If spreading and finishing machines are to receive the materials in their hopper directly from the trucks, the trucks must be of the end dump type, or be adaptable to the hopper to prevent spillage. They must not jar or place any vertical load on the paver while it is placing AC.
If material is windrowed in front of the paving machine by bottom dump trucks, the trucks must be of a type that will permit controlled sizing of the windrow. In this operation, the windrow is picked up by means of a windrow elevator (known as a "Kol-cal") and placed in the hopper of the laydown machine. The windrow elevator must be designed to carry all its weight and not put a load on the laydown machine.

The problem of temperature control of the mixed materials may become acute due to:

- bunching of the trucks prior to arriving at the paver and dumping;
- retention of mixed materials in the paving machine hopper;

- cooling of the mixture in transit; or
- spreading or windrowing too far ahead of the paving machine.

Any material that has cooled enough to cause it to be out of specification limits or cause poor workmanship should be rejected. The Inspector should be aware that load temperatures vary according to time. Some hot plant operators do not want to run the first load any longer than normal, nor do they want to waste material. Often, the first load (or two, or three) of the day may not meet specification. Every load should have its temperature checked at the beginning of AC shifts until they begin arriving consistently within the required temperature range. This should be documented. Also, do not hesitate to take samples for gradation and asphalt cement content testing if you suspect the first few loads don't meet the specs. If the samples fail, the pavement area represented by the samples should be rejected.

Adequate density becomes extremely difficult to achieve when the mix cools to below 175°F (80°C). Scheduling of the work to provide for completion of rolling before this temperature is reached is necessary for a durable, long lasting pavement. To achieve this in the morning is often difficult if the Contractor insists on high production starts. The operation should start off slowly so that necessary joint raking/rolling/straight edging/re-raking/re-rolling are accomplished before the paver goes very far.

Weigh tickets shall be collected by the Inspector or the Contractor's QC at the time of delivery of the material to the grade. If the Contractor is taking weigh tickets for spread lots (416-7.03 and 417-7.03) the completed spread form must be turned in at the end of each spread lot (twice a day). By definition there are two spread lots per shift. The time and station should be written on the back of each ticket as it is taken. This can be invaluable when attempting to evaluate any particular situation at a later date.

G. Balancing Plant and Paver Operations

Nothing is gained by having a paving machine placing an asphaltic mixture at a rate faster than the plant can produce the mix. This condition will cause a non-uniform operation that may result in roughness and cold joints and therefore it is beneficial to pace the paving to match the operation of the plant and the delivery of the mix. When AC cools under the screed, or in the augers, it is usually below specification temperature by the time the paver moves ahead. The rollers cannot compact AC in this condition, and a high spot develops which is noticed by traffic. Balancing the loads prevents this. The paver speed is maintained at a rate that is in balance with the plant production and the capacity to deliver the material to the paver. Usually, it is preferred that the paver adjusts its speed. If the Contractor's operations result in long delays and proper compaction is not achieved in accordance with the contract, the Resident Engineer or Inspector should take action to reject non-specification material and provide proper cold joints.

When material is supplied from a commercial plant, especially when quantities are small, it will probably not be possible to balance the plant and paver. On large paving projects the Resident Engineer should expect reasonable cooperation from the supplier and Contractor.

H. Correct Use of Paving Machine

The Inspector should be familiar with accepted practices of operating the laydown machine, and with the principles of its mechanical operation. Teamwork between the paving Inspector and the Contractor's Foreman usually results in the best finished product.

There are several points of importance with all paving equipment that have a bearing on the quality of work that may be performed. These points of importance are concerned with the mechanical condition of the paver, as well as the adjustment of working parts. Adjustments will not mean much if the machine is in poor mechanical condition; therefore, the first and most important part of checking a machine is to see that the parts are not

excessively worn or otherwise damaged.

There are several parts on a paving machine that should be checked prior to the start of paving operations, some of which should be examined periodically thereafter during progress of the job. These parts involve moving or working parts of the paver such as the tracks, tamper bar, screed, distributing augers, the engine governor, and the feeder bars in the hopper. A single check of most of these items will usually be sufficient during the life of any job. Others, however, should be checked almost daily to make sure they remain in proper operating condition.

For example, if the tracks on which the tractor portion of the paver moves are not snug, it is possible for the paver sprockets (on which the tracks are mounted) to climb the tracks with a rhythmic, bumping movement. This movement may be reflected to the screed in the rear, which in turn, may cause a ripple effect on the surface of the pavement. Normally a simple adjustment of these tracks will correct the problem.

The tractor unit and the screed unit of a laydown machine are essentially two separate units, joined by the tow arms that are connected to the tractor at the tow point with a pin. Probably the most important portion of the paving machine to observe is the screed unit. The screed unit consists of:

- the leveling arms mentioned before;
- a screed plate which gives the ironing action to the mat;
- on some machines a tamping bar, which is the compacting medium as well as the strike off medium for the screed (most pavers now have a vibratory screed instead);
- the thickness control (hand crank) by which the tilt of the screed plate is changed in order to increase or decrease the thickness of the mat being placed;
- the augers in front of the screed, which distribute the material transversely in front of the screed plate.

The augers are actually mounted on the tractor unit but function with the screed. The screed mechanism is also equipped with a heater that is used prior to starting the operation, or when air temperatures or mix temperatures are low. Heating the screed plate, when necessary, results in a smoother texture of the mat.

Control of mat thickness is maintained by adjusting the tilt of the screed plate. When the laydown machine is operating uniformly without an increase or decrease in thickness being occurring, the path of the face of the screed plate is parallel to the path of the hinge pins at the front of the leveling arms where the screed unit is connected to the tractor unit. If the screed is tilted up, it allows more material to crowd under the nose of the screed causing it to build a ramp for itself to climb until its path is again parallel to the path of the hinge pins. The distance required for this change to take place is normally 8 feet (2.5 meter) to 15 feet (4.5 meter). Most paving machines in use now require this approximate distance to make a thickness change.

Over manipulation of the manual thickness control handles have the same affect as over controlling a motor grader or any other piece of paving equipment. Since it is known that it takes 8 feet (2.5 meter) to 15 feet (4.5 meter) for a thickness change to occur, one should then make the thickness control changes accordingly. It is quite common for inexperienced screed operators to over manipulate the controls because they do not realize what is happening.

For example, they turn the handles and measure the material thickness directly behind the screed. They find no change in thickness because they measured too soon. They increase the tilt of the screed plate and measure again. By this time they may notice a thickness change resulting from the first adjustment. Suddenly, they realize that they have increased the thickness excessively. This causes them to spin the handles in the opposite direction in order to decrease the thickness. This same procedure is repeated. The result is that they have built waves into the surface of the mat being placed. Naturally, if they continue to operate in this manner, the result

is a series of waves and a surface having poor riding qualities. Proper control by a skilled screed operator who looks ahead rather than behind can do much to improve the surface smoothness of the finished pavement. Too much emphasis cannot be placed on the proper operation of the thickness control handles and the trust of the automatic controls.

With the advent of the automatic screed control, the problems described above have been practically eliminated. The specifications require that all pavers have functioning automatic controls. It is useful, however, for the Inspector to know the principles involved in manual control and the problems that can be encountered.

Good paver operators carefully control both the paver and haul units. In the case of a hopper-dump paver, the operator should signal the haul units to stop slightly in front of the paving unit. He or she should then move the paver slowly into the haul unit (which is waiting in neutral with the brakes off). The load can be lifted to dump while the haul unit is being pushed forward. This eliminates the sharp shove that the paver is often given when the dump truck hits the paver. It also eliminates the resulting indentation in the mat caused by the screed being shoved in reverse.

The ADOT spread-person should watch the dump units to ensure that the rear wheels stay on the ground. Enforcement of this has proven to be difficult. Usually, neither the paver operator nor the driver can see those wheels, and often they don't feel that it is important. The Contractor's spread-person should then assume this responsibility. The Resident Engineer should cover this with the Contractor, and take action to ensure proper procedures are being followed in the event the paving crew ignores these precautions.

I. Automatic Screed Control

This device is designed to maintain desired grade and slope by automatically raising or lowering the pivot points of the screed arms to control the screed angle of attack. The elevation is controlled by a reference independent of the tractor unit of the paver, which may be a traveling ski, a string line, or a matching shoe. If this device is not working the contractor will not be allowed to pave.

Close control of transverse and longitudinal slope needs to be considered when establishing the initial control grade. When using method specifications, the Resident Engineer should work with the Contractor to decide which leveling sensor will be needed if it is not specified. When using end-product specifications, the contractor is responsibility for ensuring the leveling sensor will achieve proper grade control.

Cross slopes that will provide adequate surface drainage must be maintained or restored on overlay projects. Cross slope correction may result in substantial quantity variations so the District should be kept informed of the situation.

The four main components of an automatic screed control are the sensor, control box, command panel, and motors or cylinders to adjust the tow point height. The sensor gets its information from a sensing device riding on a grade reference, a ski, or shoe riding on the grade itself. The type of external reference to be used depends upon the existing surface and the desired results. If the existing surface does not provide the desired riding qualities or if it is desired to pave to a predetermined profile grade, an effective string line reference is usually a necessity. When paving a single lift, where a minimum thickness is required, a long ski should be used. The longer ski will cause the paver to lay the mat down thicker in the low spots usually giving the surface smoothness desired. The matching shoe is designed to match a previously laid adjoining mat and can also be used to match a gutter grade, providing the gutter grade is satisfactory. Remember that the laydown machine will only pave to the accuracy of the reference. It will not correct any errors in the reference. The paver itself must correct any undesirable surface texture and short span irregularities that may exist. Automatic screed controls are not designed to do this.

A paver with automatic screed control is capable of being operated in a manual, semiautomatic, or fully automatic position. In manual position, the thickness of the mat is controlled with the thickness control screws - where conditions dictate. In semiautomatic position, one side of the screed is controlled manually while the other is controlled by the system – this is not allowed. In automatic position, both sides of the screed are controlled by the system and the screws are not used as over-rides to change the mat thickness. In the automatic position, one side of the machine may be controlled by the sensor and the other side by the pendulum, or both sides may be controlled by sensors on separate external references.

To begin a paving operation with automatic screed controls, the screed is blocked up at the correct height, and the thickness control screws are set to give proper screed angle of attack to obtain the desired mat thickness. The slope control is set, if the pendulum is being used, and the height of the sensor is set for the external reference being used.

Once the operation has started, adjustments in mat thickness should be made with the sensor control screw. Adjustments can be made with the grade control knob on the command panel but this is not as easy or convenient. The manual screed control screws should not be used.

In order to understand the operation of the automatic screed control and to know whether it is working properly, an Inspector should acquire an operation manual for the machine with which he or she is working. The Contractor should be required to furnish the manual until the paving operation is completed.

J. Joints

The transverse joint is made whenever the paving is stopped long enough for the asphalt in the hopper and screed to cool below the specified temperature, during bad weather, or for any other reason. Transverse joints are usually constructed by hand. The most common way is to end the ribbon with a hand-worked face that is cut to nearly vertical, covering this with roofing paper, and throwing more AC over it to form a ramp. The next day, the material over the roofing paper is removed to expose the vertical material, the area is tacked, and paving is resumed. Sometimes boards that are the mat thickness are placed against the vertical face, and AC is ramped down from there. The Inspector must be aware of the tendency to "thin" the mat at the end, and should straightedge the end of the day's run. Any thin or wavy sections should be removed before continuing.

Often the ribbon will begin by butting against a sawed joint. If the sawing is very old, it will be broken-up and ragged. In this case, the butt must be re-cut. (It has been found effective to wheel cut at the project limit, remove this AC, and do the work as planned. Just before paving, a saw cut can be made a couple of feet farther back, the AC removed, and the new mat butted to the existing pavement. Only the final saw cut is paid for since the first was for the Contractor's convenience.)

For good joint compaction, the importance of the vertical face cannot be overemphasized. In any instance where the Contractor has ramped up or down, material must be cut back to vertical before paving.

Longitudinal joints shall be formed by a slope shoe or hot-lapped. The sloped joint is formed with a shoe attached to the end of the screed to form a slope of about 4:1 to 6:1 beyond the screed. The width and slope will vary with the depth of the pavement being laid. The sloped edge is then compacted using a pneumatic roller. The joint should be pinched while rolling so that there is overlap by the roller between the new mat and the existing mat. As with the rest of the pavement, the compacting must be done while the mix is hot. The density required on the sloped joint is the same as for the rest of the mat. Steel rollers cannot compact the slope. Insist that the Contractor provides equipment that will do an acceptable job.

The amount of time longitudinal joints are exposed to traffic shall be kept to a minimum. They are a safety

hazard to the traveling public because the abrupt drop-off may cause motorists to momentary loose control. Work out a plan at the pre-paving meeting with the Contractor so that the exposure of these joints can be minimized. This sometimes complicates traffic control procedures but in the end it is the best thing for the traveling public.

K. Outside Edges

The sloped outer edges of pavement require compaction. This part of the specification has not been uniformly enforced in the past so there may be reluctance on the part of the Contractor to provide the necessary equipment to compact it in a timely manner. The Resident Engineer should not let this affect his or her enforcement of this specification.

L. Rumble Strips

The new standard for rumble strips is to cut them into the surface of the paved shoulder after the mix has been compacted and cooled. This eliminates the under-compacted shoulder issues that often occurred when forming the indentations with a special roller. Rumble strip requirements will be found under Subsection 928 of the Special Provisions.

M. Quantity and Quality Issues

The Project Supervisor should check on a daily basis, the information received from the plant on the amount of admixture and asphalt cement used. The daily batch weights for both materials should be compared with the amount of asphaltic concrete batched at the plant. The admixture can be checked against the mix design value, while the asphalt content can be checked against the daily ignition furnace values. Proper workmanship and paving practices are important, whether or not an end product specification is used. The following items should be brought to the attention of the Project Supervisor or Resident Engineer and rectified should they occur:

- paving in weather conditions unsuitable for paving;
- placement and handling practices which result in segregation of the mat leaving coarse rock pockets;
- rolling practices, such as vibratory rolling at cool mat temperatures or excessive pickup on a rubber tire roller, which will have a detrimental affect on the pavement surface;
- excessive roughness in the finished mat; and
- pavement thickness measurements inconsistent with plan dimensions.

Acceptance

Acceptance requirements vary for each type of asphaltic concrete specified. The Inspector must always read the Standard Specifications, and Special Provisions to determine the requirements for each type of asphaltic concrete used on the project.

Directed Sampling Versus Random Lot Sampling

Although acceptance testing is done by plate sampling and coring, the specifications still give the Inspector authority to take plate samples and cores at any time and from any place if the material appears to be defective. If the Inspector observes what appears to be defective material coming from behind the paver or out of the delivery trucks, then take additional samples. This direct sampling is allowed under any of ADOT's paving specifications even though some are end-product. Directed sampling by the Department is not allowed for any part of the statistical analysis for the lot. This also applies to coring. Any areas outside the random locations that appear to be under compacted should be cored.

Coring

Carefully review the specifications before laying out the core locations. An Inspector should spray paint a 1-foot (0.3 meter) by 2-foot (0.6 meter) box (with the longest dimension parallel to centerline) to limit the area where cores can be taken at each location.

If the Inspector doubts the authenticity of the cores, the Resident Engineer should be alerted. If it is determined that the Contractor should re-core, the project personnel shall collect all the existing cores from that lot and have them promptly destroyed so they cannot be tested. The lot should be entirely re-cored using a new set of random numbers. It is important not to test two sets of cores for the same lot, since this would distort the statistical basis for the incentive/disincentive specification. Do not allow the Contractor to keep the cores. Coring a second time should be done on an extra work basis, regardless of the reason.

After coring, the Inspector delivers the cores to the acceptance lab. They will determine the density of each core and calculate the compaction pay factor for each lot. They will issue the test results on a form similar to the one shown in Exhibit 4-9. The form shown in Exhibit 4-9 includes the computed mixture properties lot pay factors and the compaction lot pay factors. Plate samples are used for mixture property lots, not cores.

Retesting of Samples and the Determination of Outliers

Referee testing is used for end-product specifications. Retesting per this subsection should only be used for method specifications on an as-needed basis. When acceptance test results indicate that a Contractor's material is unacceptable, the Contractor may request a retest or question if some of the test results are determined to be outliers. The Resident Engineer must determine if a sample should be retested, or be regarded as an outlier. The following guidelines shall be used to determine retesting or discarding a test result as an outlier.

A. When to Retest

Retesting of a Contractor's material should normally occur only after the Contractor has taken corrective action. Retesting of a material that has not received corrective action should be the exception, not the rule. Certainly a material should not be retested when the sole basis is that the material failed the test, or that the test result was *close* to acceptable. However, there is some legitimate basis for retesting. They are:

- The test method was not followed in performing the test.
- The test data was recorded in error.
- The sample or area tested was clearly unrepresentative.
- The sample was damaged prior to testing.

In fairness to the Contractor, the Resident Engineer should inquire as to the possibility of variations in testing and sampling procedures that may have skewed the test results. Testing labs are naturally apprehensive about discussing their procedures when failures do occur, so it's important that the Resident Engineer approach them as a neutral fact-finder and not one who is trying to assign blame and seek retribution.

ARIZONA DEPARTMENT OF TRANSPORTATION
MATERIALS SECTION

PROJECT CODE 3563 MIX TYPE 3/4 INCH

PROJ & TRAC NO.	CONTRACTOR	LOCATION	R.E./SUPVR.
H328601C	FNF CONST.	PARKER STREETS	N. RICHARDS

SOURCE OF M.A.	ASPH SUPPLIER	ASPH REFINERY	ASPH GRADE	ADMIX SOURCE	ADMIX TYPE
FNF & TANNER	EOTT	PARAMOUNT, CA	AC-40	PHX. CEMT	

SAMPLE DATE	LOT NO.	TONS IN LOT	STATION		STATION	LANE	LIFT	PLANS THICKNESS
05/17/95	5	1689.77	30+35	TO	90+66	S.B	1	2.50

REMARKS:

MIX DESIGN LBS/CU FT 143.7
% ADMIXTURE 1.00

	UL	TARGET VALUES	LL	SAMPLE RESULTS: #1	#2	#3	#4	AVG.	STD DEV
3/8 IN.	85	79	73	82	79	82	82	81.3	1.50
# 8	50.0	44	38.0	43	41	43	43	42.5	1.00
# 40	25	20	15	20	20	21	20	20.3	0.50
#200	5.6	3.6	1.6	4.5	4.5	4.7	4.6	4.6	0.10
% ASPH	5.40	4.90	4.40	4.63	4.73	4.75	4.93	4.76	0.12
% VOIDS	7.0	6.0	3.6	5.5	5.4	5.1	5.1	5.3	0.21
STABILITY	(MINIMUM) 1750			5554	5109	5150	5323	5284	202.49
COMPACTION	146.9	142.9	138.9					143.8	1.93
BULK DENS.				146.0	145.5	145.8	146.0	145.8	0.24
RICE DENS.				154.5	153.8	153.7	153.8	154.0	0.37

CORE NO.	#1	#2	#3	#4	#5	#6	#7	#8	#9	#10
BULK DENS	146.8	141.2	144.5	145.5	142.2	142.0	145.0	145.8	143.0	142.2

PAY FACTOR CALCULATIONS:

	Q U	Q L	PU	PL	PT	PF
3/8 IN.	2.467	5.533	100	100	100	$ 0.00
# 8	7.500	4.500	100	100	100	$ 0.00
# 40	9.400	10.600	100	100	100	$ 0.00
#200	10.000	30.000	100	100	100	$ 0.00
% ASPH	5.333	3.000	100	100	100	$ 0.00
% VOIDS	8.095	8.095	100	100	100	$ 1.00
STABILITY						
COMPACTION	1.606	2.539	96	100	96	$ 0.50

	LOT NO.	Q L P F	TONS	PAY ADJUSTMENT
MIX	5	$ 1.00	1689.77	$ 1689.77
COMP	5	$ 0.50	1689.77	$ 844.89

LAB CODE 4
RES. ENGR./PROJ. SUPVR.: _____ DATE: 5/24/95
PROJ. LABMAN: _____ DATE: 5-19-95
CONTRACTOR: _____ DATE: _____

COPY

Exhibit AC-4. Materials Lab Sheet

B. Outliers

Provided there is not a known testing error, a test result can only be discarded as outlier for one of two reasons. The first reason would be that the test results are outside the range of possible results. An example of this type of results would be an embankment density of 75% of the maximum density when the test area appeared to be thoroughly compacted. The second reason for eliminating a test results as an outlier, when sufficient test data is available, is on the basis of a statistical analysis. If a statistical analysis is performed, it should be performed in accordance with ASTM E 178 for a 1% significance level. A minimum of ten test results should be available in order to perform the analysis. Any test results that are outside the range of possible results should be removed prior to making the analysis. Clearly, a test value should not be regarded as an outlier if there is an assignable cause, such as plant malfunction, which results in the questioned test result.

The following table should be used as a screening tool to evaluate the potential for outliers:

Characteristics	Deviation from the Average
3/8 inch (9.5 mm) sieve	7.0%
No. 8 (2.36 mm) sieve	6.0%
No. 40 (425 m) sieve	3.0%
No. 200 (75 m) sieve	1.0%
% asphalt	0.5%
% voids	1.5%
Compacted Density	5 lb. (2.0 kg)

This table is intended as a screening tool only. The values in this table are based on the analysis of actual lot data. If the values in this table are exceeded, a statistical calculation for outliers should be made. Exhibit 4-10 is a form with a completed example that can be used for a statistical outlier analysis.

If a test result is determined to be an outlier for the reasons noted above, the results should be discarded. If an outlier is determined, there may be sufficient data available in the remaining samples to calculate pay factors. Provided the Contractor is agreeable, as few as 3 mix samples or 7 cores may be used to calculate lot pay factors. Calculating the lot pay factor on a reduced number of samples is preferable to attempting to obtain additional samples, because of the difficulty in obtaining a representative sample from a completed roadway. Retesting of a sample to replace an outlier should only be attempted if the test area is accessible and a representative sample can be obtained.

There is no substitute for good judgment in review and use of test results to determine the acceptability of material. When not abused, the prudent use of a retest to fairly evaluate material acceptability or the elimination of test data that is clearly incorrect are both actions that are a necessary for good contract administration.

STATISTICAL ANALYSIS FOR OUTLIERS USING ASTM E178 AT A 1% SIGNIFICANCE LEVEL

Definition of Terms:

Term	Description
T	Test Criterion (Obtained from the Table Below)
Avg.	Average of the Test Data
Std.	Standard Deviation of the Test Data
LO	Lower Outlier Limit
UO	Upper Outlier Limit
n	Number of Samples

Statistical Analysis Procedure:

1) The average and standard deviation for the test data is calculated.

2) Using the following formulas and the table below, the lower and upper outlier limits are determined.

LO = Avg. - T*Std
UO = Avg. + T*Std

3) Test data which falls outside of the lower and upper outlier limits is discarded, provided there is no assignable cause for the occurrence of the result in question.

Example:

Assume: Avg. = 145.0 Std. = 2.1 n = 10 Then T = 2.41 - and -

LO = 145.0 - 2.1*2.41 = 139.9 UO = 145.0 + 2.1*2.41 = 150.1

Table for Critical Values for T

Number of Observations n	Upper 1% Significance Level	Number of Observations n	Upper 1% Significance Level	Number of Observations n	Upper 1% Significance Level	Number of Observations n	Upper 1% Significance Level	Number of Observations n	Upper 1% Significance Level
10	2.410	20	2.884	30	3.103	40	3.240	50	3.336
11	2.485	21	2.912	31	3.119	41	3.251	55	3.376
12	2.550	22	2.939	32	3.135	42	3.261	60	3.411
13	2.607	23	2.963	33	3.150	43	3.271	70	3.471
14	2.659	24	2.987	34	3.164	44	3.282	80	3.521
15	2.705	25	3.009	35	3.178	45	3.292	90	3.563
16	2.747	26	3.029	36	3.191	46	3.302	100	3.600
17	2.785	27	3.049	37	3.204	47	3.310	110	3.632
18	2.821	28	3.068	38	3.216	48	3.319	120	3.662
19	2.854	29	3.085	39	3.228	49	3.329	140	3.712

Exhibit AC-5. Statistical Outlier Analysis

Changes to the Mix Design

On occasion, Contractors may request revisions for certain measured characteristics of the mix design. Two methods are normally utilized for such requests:

A. New Mix Design

In accordance with the specifications, a new mix design is fully allowable. However, the new mix design should be thoroughly reviewed to assure that it contains all the required information, and that the mix design values comply with the specified requirements. A maximum of one working day is allowed for this review. Please note that it will be necessary to determine a new sand equivalent, fractured coarse aggregate particles, uncompacted void content, and ignition furnace calibration if new materials are utilized and/or percentages of existing stockpiles are revised.

B. Mix Design Changes Based on Asphaltic Concrete Test Values

In some instances, Contractors may request revisions based on production test results, especially if they are producing material that tends to vary significantly from the mix design and may possibly subject them to penalty. Therefore, this type of mix design change should only be approved on the basis of an engineering evaluation, and with the concurrence of the ADOT Materials Group. Authority to change mix design target values lies with the Bituminous Engineer of ADOT's Pavement Material Testing Section or the State Materials Engineer.

Changes to Compaction Requirements

A. General

The most-often-requested change by the Contractor usually contends that the specified compaction requirement cannot be met because of one or more of the following reasons:

1. the underlying surface does not provide a suitable platform for compaction;

2. the existing pavement surface is too variable to obtain compaction;

3. the mix is stiff and difficult to compact;

4. the mix is tender and can be over-rolled before compaction is attained; and

5. unknown, however, every possible means has been utilized to obtain compaction, without success.

If these reasons do not get to the cause of the compaction problem, several different factors may affect how well an asphalt mix is compacted.

B. Factors Affecting Compaction

Normally, the following influence the ability to compact a lift of asphaltic concrete:

- air temperature and wind speed;
- temperature of the mix and underlying pavement during the compaction process;
- lift thickness;
- high stability/low flow mixture;

- "tender" mix (usually a very fine graded mix or one with well-rounded fine aggregate);
- type and number of compaction equipment, including ballasted weight;
- sequence and timing of compaction equipment;
- number of passes and amount of coverage of each piece of equipment;
- operation of equipment including,
    1. speed (should be operated within the manufacturer's recommended speeds),
    2. tire pressures on pneumatic rollers,
    3. frequency and amplitude on vibratory rollers;
- inconsistent compaction effort (constant stopping/starting of the laydown machine results in some areas receiving greater rolling than others and inconsistencies in temperatures during rolling);
- condition of underlying material (subgrade, base, previous lift, or old pavement);
- plant production rate.

The consistency of the compactive effort and the values obtained are also very important. It is possible (via highly variable results which indicate inconsistent compaction) to have most of the core densities show results above the target and still have to assess a significant penalty. This is directly related to the statistical basis for the PU and PL tables found within the specifications. The Inspector must understand that consistent compaction is the solution to this problem.

C. Procedure for Resolving Requests for Revision of Requirements

In most cases, requests for relief of compaction requirements will begin after the Contractor is notified of material with a penalty or rejection due to compaction. This ordinarily occurs at the beginning of paving or after the weather cools. Upon notification by the Contractor that relief is being requested, the District and acceptance lab shall be advised. The Resident Engineer shall contact ADOT's Pavement Materials Testing Section for assistance and input at this time, and at each further step as outlined below. In addition, the FHWA Area Engineer should be advised if the project funding includes federal-aid.

At the earliest notice that the Contractor is experiencing difficulties in obtaining compaction, the Resident Engineer may begin to monitor and document the efforts made by the Contractor to obtain compaction.

Most specifications advise the Contractor that quality control is his or her responsibility. Therefore, it is expected that he or she will be actively engaged in this function through test strips, nuclear densities, and informational cores.

The following items should be included if relief is requested by the contractor:

1. Written justification.
2. Documentation of compaction operations including:
    A. temperatures of the mix at discharge from hot plant and during each stage of compaction. This should be documented several times throughout the day;
    B. production rate in tons per hour;
    C. roller weights (from truck scales);
    D. rolling pattern-sequence, amount of coverage, number of passes and speed of each roller (include manufacturer's recommendations);
    E. tire pressures, frequency, and amplitude during various roller sequences and coverages;
    F. statement regarding operating conditions of rollers; and
    G. analysis of weather conditions, specifically temperatures, winds, and effect on compaction.

3. Nuclear gauge and core results for each Contractor test strip, and for other compaction quality control measures taken by the Contractor.
4. Analysis of mix data for factors influencing compaction such as stability, flow, asphalt content, and gradation.

Upon receipt of the written request, the Resident Engineer shall immediately review it to assure that it contains sufficient documentation, and that the Contractor has made a comprehensive effort to obtain compaction. If not, the written request shall be promptly returned to the Contractor with a letter outlining the reasons for rejection.

Among the factors most easily overlooked by the Contractor in obtaining compaction are the characteristics of the mix he or she has provided. Should test results indicate a stiff or tender mix, the Contractor has the responsibility to submit a revised mix design. A poorly conceived mix design is not justification for lowering density targets.

Frequently, the Contractor's compaction difficulties can be traced to marginal weather conditions. In some cases, the logistics of construction, or the safety and convenience of the motorists make postponement of paving a less desirable alternative than the completion of the paving with a lowered compaction requirement. Such a decision can only be made with the concurrence of the District, Deputy State Engineer, and the FHWA (if applicable).

Should it be determined that adequate justification and documentation has been provided, the Contractor's request should be promptly verified. This may be accomplished in the following manner:

- Verify roller weights.
- Verify operating conditions of rollers.
- Verify hot plant pyrometer readings and production rates.
- Verify mix temperatures during compaction.
- Verify weather conditions.

Should this verification indicate discrepancies or deficiencies that, in the opinion of the Resident Engineer, are sufficiently significant to invalidate the Contractor's justification, the request shall be promptly returned to the Contractor with a letter outlining the reason(s) for the rejection.

Compaction

Adequate compaction is vital to the success of asphalt pavements. Good compaction can often offset some of the other deficiencies in asphalt mixes and lead to a long lasting durable pavement. Asphalt pavements are designed to achieve a critical range of effective voids in the mix when compacted as specified. Too much or too little compaction can be harmful to the performance of the pavement.

Compaction methods are specified according to the "nominal" thickness of the layer being placed. The nominal thickness referred to in the specifications is the thickness of each individual layer shown in the typical section drawing of the project plans. For thick lifts the end-product specification will apply. For thin lifts, the method specification will apply. The definition and treatment of thick lifts and thin lifts varies so the Inspector must read the specifications for each type of asphaltic concrete.

The Contractor may request permission to place the pavement in a thickness less than nominal thickness show on the plans. They may be permitted to do so provided that compaction, testing, and acceptance of density is done in the manner required for the plans original nominal thickness. All changes in nominal layer thickness are to be cleared with ADOT Materials Group, and verified by a change order in which the compaction thickness

specifications will be stated.

Which types of compactors should be used, and in what sequence, can vary. The ADOT specifications approach the problem in several different ways. The end-product specification will require a density to be achieved and leave it completely in the Contractor's hands to select the type, size, and application of the equipment. Method specifications allow several different options. Each option will state which type and size of equipment must be used and will require a specific number of coverages by each type. ADOT may require end-product and/or method specifications to best fit the particular needs of the project. End-product specifications are used to ensure quality of high production paving operations. Method specifications are normally used for thin lifts, small quantities, or areas that are hard to construct such as turnouts, narrow widening, and leveling courses. When the Resident Engineer has the option to select the compaction method, it should not be base entirely on the Contractor's available equipment. Pick a method that is best for the pavement taking into account subgrade condition, mix properties, weather conditions, available equipment, and constructability.

A. Types of Compaction Equipment (Rollers)

There are three basic types of compaction equipment used on asphalt pavement:

1. The pneumatic compactors have rubber tires and may be equipped so that tire pressure can be changed on-the-run. To be acceptable, the tires must be enclosed to retain the heat, which prevents asphalt sticking to the tires. The compactors are equipped with a means of wetting the tires, usually by spraying water onto mats that uniformly wet the tires. The mats are retractable so they can be raised when the machine is running with dry tires. The individual wheels are built to move up or down (oscillate) so that they will conform to irregularities in the roadway while still maintaining compactive forces. The rubber tires impart a kneading motion that some authorities believe improves inter-particle contact and helps to fill surface irregularities in the base. It is important that all tires are inflated to the same pressure and that the correct amount of ballast is being carried. It may be necessary to adjust the tire pressure but the highest possible tire pressure will usually give the best performance. Rubber tired equipment will often heal cracking or surface looseness that has developed under steel wheeled compactors.

2. Steel wheel compactors are simply large, smooth steel cylinders equipped with a device for wetting the drum to prevent pick up of asphalt. The cylinders are designed to be ballasted, which may be necessary to meet the individual wheel loading called for in the contract specifications. The manufacturer's operator's manual contains information on weights carried by each axle (empty and ballasted). The Contractor should allow the Resident Engineer to check this information to be sure the drive wheel carries the specified weight. Most steel wheel rollers are designed to be loaded heavier on the drive wheel than on the guide wheel. The gross weight must be obtained within the manufacturer's recommendations. This makes it important to check the operating literature of the roller.

3. Vibratory compactors used on asphaltic concrete are steel wheel compactors having an internal vibration mechanism. The control for the frequency and amplitude of the vibration function can be turned off and the unit used as a static compactor. Contractors generally like the vibratory units because, for most situations, they achieve density faster and with less equipment than other combinations of machines. If the Contractor proposes using a vibratory compactor in the static mode, the manufacturer's literature should be checked to determine whether the unit will meet the weight requirements. Some vibrators will not be heavy enough to meet the static load specification.

All compactors tend to pick up asphaltic concrete, especially when the compactors are cold, so they have been designed to minimize the problem. Steel wheels are usually kept wet with clean water. After they get hot, a minimum amount of water should be used. Pneumatic tired compactors are required to have skirting which will

reduce heat loss so the machine can be run with hot dry tires. The tires will pick up asphalt pavement until they are heated adequately. A built in water system is used to prevent pickup until the tires are heated. The wetting should be stopped as soon as possible.

Some roller operators feel the reason that they can't get close to the paver is the AC is too hot. They think "the proof" is that their rollers are picking up the AC. The truth is the AC is rarely too hot, but the roller wheels are just too cold. The operators should gradually get closer, heating their wheels as they do. The pick-up will stop when the wheels get hot enough. Eventually, rollers can usually operate immediately behind the screed, where they should be.

If the Contractor elects to use agents other than water to wet rubber or steel tires, the specification requires the agent to be approved by the Resident Engineer. Approved agents are usually some kind of detergent or non-solvent oil from the ADOT Approved Products List. Fuels and solvents may not be used.

B. Rolling Pattern Calculations

It is necessary to consider a number of factors other than density when a rolling pattern is set up. When using vibratory equipment, the frequency being used must be matched to the speed of the compactor if pavement ripple is to be kept under control.

Speed of the compactors has to be matched to the paver speed and time available for compaction as governed by the temperature of the asphaltic concrete. Slowing the last couple of passes is preferable to stopping the rollers, since resting on the mat causes it to sink into the mat and a sitting roller has tires/wheels that are cooling off. When a roller has to stop, it should be moved off the hot mat.

In some cases, it may be necessary to adjust production rates or add compactors in order to meet all the criteria relating to time, temperature, and equipment requirements.

Widely accepted top speeds of compactors are 3 mph (5 km/h) for steel wheel, and 5 mph (8 km/h) for rubber tire. However, observation and manufacturer's literature may modify these initial estimates.

The first concern is the compaction time: How much time is available to compact the pavement under the conditions of a given base temperature and mix temperature at the time of laydown?

Although there is no end-product specifications for lift compaction to be finished within a given temperature range, the Resident Engineer and Inspector should be aware of the factors involved. On thin lifts ADOT requires that initial (or breakdown) and intermediate compaction be done before the mat cools to less than 200°F (95°C).

Exhibit 4-11 shows rolling time available for various combinations of base temperature and temperature of mix at laydown. The table is based on mix temperatures that have been adjusted to provide at least 15 minutes to complete compaction. The controlling conditions reflected in the chart are a wind speed of 11.5 mph (18.5 km/h), an air temperature at 40°F (5°C), a dense cloud cover, and a minimum compaction temperature of 175°F (80°C). The cutoff point is 175°F (80°C), because after this point, the mat temperature is so low that compaction possibilities decrease rapidly. Exhibit 4-11 shows that even with fairly high base temperatures and increasing mix laydown temperature, the time available to complete rolling becomes more and more critical as the depth decreases. The problem is even more acute when wind is considered.

When the wind chill reduces the apparent temperature to the range so that rolling time is drastically reduced, it becomes necessary to cease operations or increase the number of rollers. If the Contractor is operating with the minimum number of rollers under marginal weather conditions, the Resident Engineer should treat any

predictions for worse weather seriously. The Contractor should be notified that it is unlikely that compaction can be achieved, and the operation should be modified or stopped by the contractor. Specifications allow the Resident Engineer to direct the contractor to stop work or adjust paving operations in marginal weather (see the "weather limitations" subsection). Possible modifications are a higher mix temperature, reduced production, more compaction equipment, or a combination of these.

Time available to complete compaction before the pavement cools to 175°.
The table is based on cloudy weather with a wind of 11.5 Mph. and air temperature of 40°.

TABLE A

Recommended Minimum Laydown Temperature

Base Temp.	1/2"	3/4"	1"	1-1/2"	2"	3" and Greater
20-32	—	—	—	—	—	285
+32-40	—	—	—	305	295	280
+40-50	—	—	310	300	285	275
+50-60	—	310	300	295	280	270
+60-70	310	300	290	285	275	265
+70-80	300	290	285	280	270	265
+80-90	290	280	275	270	265	260
+90	280	275	270	265	260	255
Rolling time, Minutes	4	6	8	12	15	15

TABLE B
WIND-CHILL CHART

Wind Speed MPH	ACTUAL THERMOMETER READING °F.								
	65	60	55	50	40	30	20	10	0
	Equivalent Temperature								
Calm	65	60	55	50	40	30	20	10	0
5	63	58	54	48	37	27	16	6	-5
10	59	43	46	40	28	16	5	-9	-21
15	56	49	43	36	22	9	-5	-18	-36
20	54	47	39	32	18	4	-10	-25	-39
25	52	45	37	30	16	0	-15	-29	-44
30	50	44	35	28	13	-2	-18	-33	-48
35	49	41	34	27	11	-4	-20	-35	-49
40	48	42	33	26	10	-6	-21	-37	-53

Exhibit 4-11. Laydown Temperature Charts

The number of compactors needed for a given production rate can be determined as follows:

1. Determine the paver speed based on the Contractor's proposed production.

   Example: Assuming the plant production is 300 tons per hour and the paver will lay a 1-½ inch mat 13 feet wide, then if the material weighs 150 pounds per cubic foot, the paver will be able to operate at rate of 42 feet per minute:

   Weight of pavement per foot = 1.5 / 12 x 13 x 150 / 2000 = 0.12 tons per foot

   $$\text{Paver speed} = \frac{\text{plant production/60}}{\text{tons per foot}} = \text{feet per minute}$$

   $$\text{Paver speed} = \frac{300 / 60}{0.12} = 42 \text{ feet per minute}$$

2. Estimate production rate per compactor.

   Example: Assume 3 mph for steel wheel compactors, and 5 mph for rubber tire compactors. Assume 85% efficiency to allow for direction changes, reloading with water, etc.

   Compactor production rate = compactor speed x efficiency = feet per minute

   $$\text{Steel wheel} = \frac{3 \text{ mph} \times 5280 \times 0.85}{60} = 225 \text{ feet per minute}$$

   $$\text{Rubber tire} = \frac{5 \text{ mph} \times 5280 \times 0.85}{60} = 375 \text{ feet per minute}$$

3. Calculate the total number of passes each type of compactor in the rolling train must make to obtain all the required coverages.

   Example: Assume 406 asphaltic concrete is specified. Option Number 1 in Subsection 406-7.05(A)(3) of the Standard Specifications requires one initial steel wheel breakdown coverage, four rubber tire intermediate coverages, and about two steel wheel finish coverages. Assume the compactors are six to eight feet wide and must overlap the previous pass by at least two feet.

   $$\frac{\text{width of mat}}{\text{compactor width} - \text{overlap per pass}} = \text{required passes per coverage}$$

   $$\frac{13}{8 - 2} = 3 \text{ passes per coverage (always round up, not down)}$$

   Passes per coverage x required coverages = total required passes
   3 x 1 = 3 initial passes by steel wheel compactors
   3 x 4 = 12 intermediate passes by rubber tire compactors
   3 x 2 = 6 finish passes by steel wheel compactors

4. Calculate the number of compactors required.

$$\frac{\text{Paver speed x total required passes}}{\text{Compactor production rate}} = \text{required number of compactors}$$

$$\frac{42 \times 3}{225} = 1 \text{ steel wheel compactor for initial rolling}$$

$$\frac{42 \times 12}{375} = 2 \text{ rubber tire compactors for intermediate rolling}$$

$$\frac{42 \times 6}{225} = 2 \text{ steel wheel compactors for final rolling}$$

The use of these calculations in the pre-paving meeting is helpful in assisting the Contractor in determining the equipment requirements before work starts. Starting out with the necessary amount of equipment, operated under favorable weather conditions, will save all parties a lot of frustration.

After the paving operation is balanced, the roller operation must also be balanced. To achieve the maximum density, the asphalt pavement must be compacted while the temperature is high enough to keep the viscosity of the asphalt low. This allows the rock particles to move around under pressure and reposition into a dense mass.

C. Inspecting Vibratory Compactor Operation

Vibratory compactors have their own special peculiarities and operating techniques. The Inspector should read the equipment's operator manual carefully so he or she can be sure the machine is being operated correctly.

The specifications prohibit using vibratory compaction on lifts under 1 inch (25 millimeters) thick or when the mat temperature is less than 180°F (80°C). Vibratory compaction of thin lifts can cause the aggregate to fracture.

The vibrators should be checked to see that they operate over the full range of amplitude and frequency.

Generally, a higher frequency and lower amplitude are used for thin lifts and the amplitude is increased as the lifts get thicker. Vibrators on the newer units turn off automatically when the machine stops. On older machines, make certain that the operator knows that he or she has to turn the vibrators off before the machine stops. Before changes in amplitude or frequency are made, be sure that the effects of the change are understood. Industry studies suggest that to achieve maximum smoothness and compaction, the distance between impacts should not exceed 1½ inches (40 millimeters). To help maintain the desired spacing, the following relationships can be used as a guide.

Millimeters Between Impacts

Speed	Frequency of Vibrator (Hz)					
mph	**20**	**25**	**30**	**35**	**40**	**50**
1.5	35	28	24	20	18	14
2.0	45	36	30	26	23	18
2.5	56	44	37	32	28	22
3.0	69	56	46	40	35	28
3.5	80	64	53	46	40	32
4.0	90	72	60	52	45	36
5.0	111	89	74	63	56	44

Vibration of thin lifts can cause the aggregate to fracture.

D. Resolving Compaction Problems

In some cases, the material is too hot to be properly compacted. This is noticeable from the instability of the material under the roller. Indications are: it shoves out from the sides of the wheels, produces a "wave" ahead of them, or is still unstable after the roller has passed over it. The Inspector should be aware that some mixes are more tender than others. If the mix is too hot, a delay in the breakdown roller should correct the problem. A change in roller weight, type, or pattern may also work.

Cracking is very common when using steel wheeled compactors. There may be several reasons for cracking. Thermal cracks are usually small surface cracks caused by the surface of the mat cooling faster than the interior. These cracks can be usually removed by additional rolling. A tender mix may crack under normal rolling effort due to its inability to bind together. The problem could be the rollers, but the Inspector should not rule out a problem with the subgrade. Cracks caused by subgrade problems are usually long and deep cracks that are much wider than other types of cracks. If just one area is cracking, the Contractor may have to skip that section until the subgrade can be corrected. Cracks on good base can be kneaded together with a pneumatic roller, however, it is best to correct the subgrade since the healing may only be on the surface. The remaining unhealed portion of crack leaves the pavement weakened and exposed to weathering.

Unless the types of equipment and compaction sequence are specified, the Contractor has the option of using rubber or steel rollers. Regardless of the type of equipment used for the initial breakdown compaction, it is essential that the first pass be made as soon as possible so that the temperature relationships mentioned above will be maintained. The greatest part of compaction is attained with the first breakdown pass.

In order to eliminate or minimize compactor marks the final finishing passes may have to be delayed until the mat cools to the proper temperature. Trial and error testing of equipment and procedures is necessary to achieve the specification density in the least time.

Weather Limitations

“Construction Requirements”, such as 406-6, 407-10.06(A)(1), 413-7.06(A), 414-7.06(A)(1), 416-6, and 417-6, give the Resident Engineer the ability to suspend paving operations if weather conditions, either existing or expected, would adversely affect the quality of the asphaltic concrete pavement. Adverse weather conditions include:

1. Frozen subgrade as evident by the fact that a shaded surface thermometer reads 32°F (0°C) or less, or the subgrade is excessively hard- the entrapped water has turned to ice.

2. For thin lifts and ACFCs certain surface temperature requirements such as 80°F (27°C) for an AR-ACFC are not being met.

3. Muddy subgrade due to the material being too wet.

4. Standing water on the subgrade. This can usually be remedied by using pumps and/or an air hose.

5. Precipitation. A light rain or snow is sometimes OK as long the mat does not cool down too quickly.

6. Threat of precipitation. It does not have to be actually raining or snowing to stop the work. During seasons where precipitation is common, the Resident Engineer should discuss with the Contractor what set of weather conditions would lead to a shut down. This would help prevent the Contractor from

going through the unnecessary expense of firing up the hot plant and sending out a paving crew only to have the project shut down before the first truck arrives,

7. Cooler temperatures with a lot of wind. The heat loss from the pavement can be too much for the rollers to keep up, especially on thin lifts.

Obviously the Resident Engineer and the Project Supervisor will have to exercise some judgment. If you shut a paving operation down, you should document the reason(s) for your decision and list the sources you used (such as weather forecasts) in arriving at your decision. Paving and plant operations are expensive affairs and back charges by construction companies, especially if it doesn't rain, are not uncommon. However, keep in mind that pavement will be there long after the plant and equipment are gone, and its quality should come first.

Smoothness

Specifications for asphaltic concrete surfaces contain have tolerances that must be checked with a straightedge. Straightedge tolerances vary, so the inspector must refer to the appropriate specifications. Pavements on selected interstate and major highways must also meet smoothness requirements based on International Roughness Index (IRI) values. These numbers are an indicator of pavement roughness.

A specialized van that contains an inertial profilometer measures pavement roughness and computes the IRI values. ADOT's Materials Group, Pavement Management Section, operates the van and may help the Contractor with interim measurements during paving if requested and availability permits.

The Special Provisions will have a maximum IRI value (called a correction value or CV) that the Contractor must meet (the smaller the number, the smoother the pavement). The maximum IRI value requirement depends on the type of riding surface. ACFC riding surfaces on top of new AC will have stricter smoothness requirements than new AC pavements without an ACFC.

The Special Provisions contain information tht is used to calculate the bonus or penalty for payment or reduction in payment to the contractor The bonus or penalty is applied to each 1/10 of a lane mile.. Bridges and the transverse joints at the project limits are usually excluded from smoothness testing for bonus or penalty but they still must meet the straightedge requirements.

Special Provisions for pavement smoothness are used to distinguish between the different riding surfaces. Carefully check the smoothness requirements in the Special Provisions since they may be different than the requirements of the last project.

The IRI values correlate well with the public's perception of pavement ride quality. ADOT uses an incentive/disincentive payment approach to encourage Contractors to build a smoother pavement. A look at the payment schedule reveals that the bonus payments are much better than the penalties. This payment structure may appear to favor the Contractor, but we must keep in mind the difficulty of eliminating all roughness. While the formula for the incentives and penalties is mathematically a linear function, the effort the Contractor must add to achieve a unit improvement in smoothness is not. The ability to achieve a two unit improvement in smoothness is proportionally more difficult than a one unit improvement, at or near the required level of smoothness. However, as lower and lower IRI value are achieved, it continues to become progressively more difficult to achieve the next incremental increase in smoothness.

Several publications contain excellent recommendations on how to achieve pavement smoothness. Following the recommendations is no guarantee that the Contractor will produce a smooth pavement. Inspectors should

not actively assist the Contractor in constructing smoother pavements, or take any action that could shift responsibility for smoothness from the Contractor to ADOT.

Several past projects have shown that Contractors can meet the minimum non-penalty smoothness level, even on rough existing pavements. By using the recommended tools and best practices of the trade, some Contractors have earned significant bonus payments.

A separate lump sum pay item (1090010) is created in the project estimate to handle bonuses and penalties. The Pavement Management Section will calculate the bonuses and penalties for each 0.1-lane-mile increment of pavement and the total payment (or deduction) for the project. The report you receive from the Pavement Management Section is used as the supporting documentation for the pay estimate. A copy of all reports should be submitted with the final estimate.

Method of Measurement and Basis of Payment

Measurement and payment techniques vary depending on whether the asphaltic concrete (AC) is specification 406, 407, 408, 409, 411, 413, 414, 416, 417, or a special design for local government work. Always check the Special Provisions and Standard Specifications carefully to determine the method of measurement and basis of payment for each type of asphaltic concrete used on the project.

A. Asphalt Cement

Methods used for determining asphalt cement content vary. For example:

- AC 406 is based on the content determined from ignition furnace testing multiplied by the number of tons in each lot (after the asphaltic concrete wasted is subtracted from the daily tonnage)
- AC 409 Miscellaneous Structural; bituminous material is not measured for payment.
- AC 413 asphalt-rubber content is determined with a nuclear asphalt content gauge.

B. Mineral Admixture

The Special Provisions will indicate the percent of mineral admixture, if it is required in the mix. Specifications require the Contractor to submit documentation on a daily basis to the Resident Engineer showing the approved amount of mineral admixture has been incorporated into the asphaltic concrete. This requirement is to verify that the mineral admixture is being added at the required rate and to furnish information to allow the Contractor to adjust the process.

It's intended that the Contractor submits the following information on a daily basis:

1. Tracs No. (or Project No.)

2. Contractor

3. Date of Asphaltic Concrete Production

4. Tons of Asphaltic Concrete (AC) Produced

5. Tons of Asphaltic Cement (Asphalt) Used (plant information)

6. Tons of Mineral Admixture Used (Use A or B below)

A. Hot Plant computer printout indicating actual weight (attach printout to the submittal).
B. Silo weight at beginning and end of shift plus Mineral Admixture added to silo during the shift (attach invoices to the submittal).

7. Contractor's Signature

Exhibit 4-12 is an acceptable example of a “Daily Mineral Admixture Report” form. This specific form doesn't have to be used, and any submittal giving the above information is acceptable. The advantage to this form is that it provides the equations to check the percent admixture. Note that the weight of admixture is divided by the weight of the aggregate, so the weight of both the asphalt cement and the admixture must be subtracted from the weight of the asphalt concrete to find the weight of aggregate.

The quantity of mineral admixture to be paid should be a summation of the "Tons of Mineral Admixture Used" taken from the Daily Mineral Admixture Report submitted by the Contractor. The daily quantities can be added up monthly for progress payments and totaled for final payment.

Verification of the asphalt content should be made by the ADOT Field Office upon receipt of the test data (Exhibit 4-9) to assure the payment quantities for mineral admixture are not significantly different from the mix design requirement. The following formula can be used:

$$\text{Percent Admixture} = \frac{(\text{Admixture})}{(\text{AC}) - (\text{Verified Asphalt}) - (\text{Admixture})}$$

where:

Admixture = Tons of Mineral Admixture Used (Daily Mineral Admixture Report)
AC = Tons of Asphaltic Concrete Used (tickets or scale sheets)
Verified Asphalt = Tons of Asphalt Cement Used (test values)

It is reasonable that the percent admixture be within approximately five percent of the mix design values. If the results are outside this 5% tolerance, the Contractor should adjust or revise his or her process for handling mineral admixture, and the field office should assure that the process and measurements are valid.

This approach for the payment of mineral admixture is based on the best information available. The data is in tons and is more precise than multiplying the mix by a percentage. It would be more desirable to have a value from the actual mix (as in the case of asphalt cement) because this is more of a performance approach; but tests for the mineral admixture in the mix are very expensive and not available in a timely manner.

Quantities for both the asphalt cement and mineral admixture need to be adjusted for asphaltic concrete that has been wasted or rejected.

C. Documentation

At the end of each day's operation, the Inspector shall collect all weight sheets, weight tickets, and spreadsheets. The Inspector must balance the quantities and turn them into the field office for checking and payment purposes before leaving the project for the day.

DAILY MINERAL ADMIXTURE REPORT

TRACS NO. (or PROJECT NO.): IR-10-1 (10)

CONTRACTOR: I.R. Good

DATE PRODUCED: 8 May 2001

TONS OF ASPHALTIC CONCRETE (AC) PRODUCED: 2,294.35

TONS OF ASPHALT CEMENT (Asphalt) USED: 102.10

TONS OF MINERAL ADMIXTURE (Admixture) USED: 21.28

Attachment (A or B) B

A) Hot plant computer printout indicating actual weight

B) Invoices showing silo weights (beginning and end of shift) plus admixture added

$$\text{PERCENT ADMIXTURE} = \frac{\text{(Admixture)}}{\text{(Aggregate)}} = \frac{\text{(Admixture)}}{\text{(AC) - (Asphalt) - (Admixture)}}$$

$$= \frac{(21.28)}{(2294.35) - (102.10) - (21.28)}$$

= 0.98 % Admixture

(Not for Payment)

This percentage ☑ complies with the approved mix design.

☐ does not comply with the approved mix design.

Blow N. Go

Signature (Contractors Representative)

Exhibit AC-7. Daily Mineral Admixture Report Example

The Pay Item Documentation for Inspectors Manual provides guidance in how to field document AC paving operations. Field Office documentation includes:

1. Recap of asphaltic concrete payments by lot (see Exhibit 4-13). As a minimum, the recap should include:
   A. date material used,
   B. lot number,
   C. asphaltic concrete pay tons,
   D. percent asphalt cement from the materials lab sheet (see Exhibit 4-9),
   E. asphalt cement pay tons,
   F. percent admixture,
   G. admixture pay tons,
   H. bonus/penalty pay factors,
   I. accumulative totals for the above items.

2. Daily Mineral Admixture Report (see Exhibit 4-12).

3. Hot plant computer printout.

4. Materials lab sheets for each lot (see Exhibit 4-9).

5. Documentation for penalties/bonuses (any changes to the Standard Specifications or Special Provisions will require a change order or minor alteration).

The above documentation should be submitted to the Field Reports Section for review with the final estimate. The following documents are recommended as part of any asphalt paving operation:

1. Mix temperature and pavement depth field book.

2. Straightedge and rolling pattern field book.

3. Laboratory test reports on mix properties and compaction.

4. Asphalt cement invoices.

5. Daily mineral admixture reports.

6. Daily pyrometer readings from the plant.

7. Basis of payment recap sheets performed on MS Excel spreadsheet.

8. Daily asphalt spread calculation sheets.

9. Daily inspection diaries complete with weather conditions and air temperatures.

PROJECT # IR-10-1(10)
ASPHALT CONCRETE RECAP SHEET

(416 & 417) (only)

DATE	LOT #	A.C. PAY TONS	% ASPH. CEMENT	PAY ASPH. CEMENT	% MIN ADMIX	PAY ADMIX	MIX PAY FACTOR	MIX BONUS/ PENALTY	COMP. PAY FACTOR	COMP. BONUS/ PENALTY	SPREAD LOT PAY FACTOR
1-May-01	1	1,247.80	4.53%	56.53	1.00%	11.79	($0.50)	($623.90)	$0.00	$0.00	$0.00
2-May-01	2	1,891.72	4.11%	77.75	1.00%	17.96	$0.75	$1,418.79	$0.00	$0.00	$0.00
3-May-01	3	2,372.26	4.46%	105.80	1.00%	22.44	$0.50	$1,186.13	$0.00	$0.00	$0.00
4-May-01	4	3,247.47	4.12%	133.80	1.02%	31.44	$0.00	$0.00	$0.00	$0.00	$0.00
5-May-01	5	2,835.11	4.31%	122.19	1.05%	28.19	$1.00	$2,835.11	$0.00	$0.00	$0.00
6-May-01	6	1,484.69	4.39%	65.18	0.95%	13.36	$1.00	$1,484.69	($0.25)	($371.17)	$0.00
7-May-01	7	821.91	4.51%	37.07	1.00%	7.77	$1.00	$821.91	$0.50	$410.96	$0.00
8-May-01	8	2,294.35	4.45%	102.10	0.98%	21.28	$1.00	$2,294.35	$1.00	$2,294.35	($458.87)
9-May-01	9	2,454.40	4.31%	105.78	1.00%	23.25	$0.50	$1,227.20	$1.00	$2,454.40	$0.00
10-May-01	10	3,052.84	4.34%	132.49	1.00%	28.91	$1.00	$3,052.84	$1.00	$3,052.84	$0.00
11-May-01	11	2,992.63	4.37%	130.78	1.04%	29.46	$1.00	$2,992.63	$0.50	$1,496.32	$0.00
12-May-01	12	1,300.50	4.36%	56.70	1.00%	12.31	$1.00	$1,300.50	$0.00	$0.00	($130.05)
13-May-01	13	1,344.58	4.22%	56.74	1.00%	12.75	$0.25	$336.15	$1.00	$1,344.58	$0.00
14-May-01	14	3,230.68	4.39%	141.83	1.01%	30.89	$1.00	$3,230.68	$0.50	$1,615.34	$0.00
16-May-01	15	3,715.15	4.53%	168.30	1.00%	35.12	$1.00	$3,715.15	$0.50	$1,857.58	$0.00
17-May-01	16	2,655.69	4.65%	123.49	0.99%	24.82	$0.50	$1,327.85	$0.50	$1,327.85	$0.00
18-May-01	17	3,451.20	4.62%	159.45	1.00%	32.59	$0.25	$862.80	$0.50	$1,725.60	$0.00
19-May-01	18	3,371.26	4.52%	152.38	1.00%	31.87	$0.50	$1,685.63	$0.50	$1,685.63	($337.13)
20-May-01	19	2,048.45	4.43%	90.75	0.97%	18.81	$1.00	$2,048.45	$1.00	$2,048.45	$0.00
21-May-01	20	3,502.50	4.47%	156.56	1.03%	34.11	$1.00	$3,502.50	($0.50)	($1,751.25)	$0.00
TOTALS:		49,315.19		2,175.66		469.12		$34,699.45		$19,191.46	($926.05)

Exhibit AC-8. Recap Sheet