601 CONCRETE STRUCTURES

601-1 Description

A structure is an arrangement of materials that sustains loads. Loads can be the weight of an automobile, the force of the wind, or the pressure of soil and water. A structure must withstand loads without collapsing or deflecting excessively. A safe structure is one that can carry its intended loads without the risk of injury to the people using the structure.

Structures can be made up of different materials. For example, bridges can be built out of timber, steel or concrete. Sometimes these materials are combined to form composite structures where two or more materials share the loading.

The structures that ADOT builds are made primarily of structural steel or structural concrete.

Structural steel is a group of ASTM designated steels with material properties that are specifically intended for structural applications such as buildings and bridges. Structural steel is very different from the steel found in automobiles, washing machines, and hand tools. Structural steel is of higher grade, designed to have high strength, and stretches (or yields) just before failure as a warning to those in or near the structure.

Structural concrete is a composite material consisting of concrete and steel. It must meet higher standards of quality than concrete found in sidewalks or driveways. Like structural steel, it is designed to have a high strength and yield before failure.

Types of Structural Concrete

Structural concrete can be divided into two types: reinforced concrete and prestressed concrete.

Reinforced concrete consists of concrete and reinforcing steel. Concrete is strong in compression and weak in tension. Reinforcing steel is generally used to carry the tensile loads placed on a concrete structure. These tensile loads may be due to the bending of a concrete member such as a beam or due to shrinkage of the concrete itself. Reinforcing steel is used to help concrete carry compressive loads and shear stresses that develop when loads move through a structure.

Prestressed concrete is a mixture of concrete, reinforcing steel, and high strength steel wires or strands. The reinforcing steel serves the same purpose as in reinforced concrete. The steel wires, which are woven into steel strands, are designed to induce compressive loads in the concrete. By inducing compressive loads, the steel strands allow the structure to carry more tensile loads. In other words, before any portion of structure can go into tension, all the induced compression must be overcome first by the load. The steel strands can be either pretension or post-tensioned depending on whether the strands are tensioned before or after the concrete is placed in the structure.

Prestressed concrete requires less reinforcing steel since there is a smaller tensile stress developed in concrete. The result is thinner and lighter structural concrete members. The concept is further discussed in Section 602-1 of this manual.

Understanding Structures and the Importance of Inspection

Additional information on how structures perform and the materials used in them can be found in the references

listed at the end of this chapter. Inspectors and Project Supervisors assigned to inspect concrete structures should have some basic understanding on how these structures are intended to perform. Discussions with the Designer of a structure can go a long way to clarify why the Special Provisions for a structure are written the way they are and why the Project Plans contain various details, which on the surface, appear vague. If Inspectors and Resident Engineers understand how the various structural members (abutments, pier, girders, etc.) are designed to function, they are less likely to overlook key inspection areas.

The Department cannot over emphasize the importance of thorough and timely inspections on all concrete structures. Failures of concrete structures can lead to injury, death, and significant damage to both public and private property. The Inspector is the guardian of public safety in this respect and should carry out inspections with the appropriate care and due diligence. An Inspector's worst enemy on a structural concrete construction job is ignorance. Lack of knowledge in reading and interpreting bridge construction specifications and the inability to correctly read Project Plans and construction details will get Inspectors into serious trouble. Inspectors are encouraged to seek clarification with the Resident Engineer or Project Supervisor on specifications and details they do not understand.

Resident Engineers and Project Supervisors have a duty to assign well-trained and experienced Inspectors to structural concrete work. Inexperienced Inspectors should not be allowed to inspect and/or accept work without close supervision. The Resident Engineer or Project Supervisor should sit down with the Inspectors and review the Project Plans and specifications prior to construction. The Inspector should know how each structural member is to be built and designed to fit together as a whole

The Role of the Designer and ADOT Bridge Group

During construction, the Designer of a structure, whether it be a Consultant Engineer or one of ADOT's own bridge design teams, will deal with questions regarding plan clarifications, shop and working drawing reviews, and routine construction problems involving design details. The ADOT Bridge Group develops design and construction policies for bridges and other major structures. Policy and procedural changes related to bridge construction and bridge construction specifications must be cleared through the Bridge Group regardless of who designed the structure

The Bridge Project Engineer

ADOT Bridge Group assigns a Bridge Project Engineer to each project who is available to answer any questions Resident Engineers or Project Supervisors may have about any aspect of the bridge construction. This is a valuable resource that the Department encourages the field staff to use.

Major construction problems, significant design and specification changes should be discussed with the Bridge Project Engineer regardless of who designed the structure. A memo is issued by the Bridge Group at the beginning of each project indicating which Bridge Project Engineer will provide technical assistance during construction. Sections 14 and 18 of the Bridge Design and Detailing Manual more fully describe the Bridge Group's and the Bridge Project Engineer's role during construction.

Minor Structures versus Major Structures

Section 101.02 of the Standard Specifications define what ADOT calls a *structure*. The intent is that anything that sustains a load is called a structure. This could be a buried pipe that carries soil loads from above or a catch basin that holds the weight of water within it. This distinction is important since certain specifications (for example Sections 202, 203, and 601) require the Contractor to do certain things when working around a

structure. Subsection 601-1 further subdivides structures into two main groups: *Minor structures* are small easy-to-install structures that can be either precast or cast-in-place. *Major structures* are the larger heavier structures that are usually cast-in-place, but can be precast. The following table lists the most common minor and major structures:

Minor Structures	Major Structures
Cattle guards	Box culverts
Catch basins	Bridges and bridge members
Barrier wall	Walls
Headwalls	Slabs
Manholes and manhole risers	
Utility vaults and pull boxes	

Although concrete pipe is considered a structure and can be precast, it actually falls under the 501 specification.

Other Specifications Related to Concrete Structures

Section 601 and 602 of the Standard Specifications do not encompass all aspects of structural concrete construction. In fact Inspectors should frequently refer to other sections of the Standard Specifications and Special Provisions. In addition to the component materials of structural concrete (such as cement, sand, water, and fly ash), structural concrete has many related materials such as reinforcing steel, joint materials, bearing pads, and prestressing strand that become integral parts of the structure. Relevant Standard Specifications sections include:

Subsection 109.10 - Lump Sum Payment for Structures
Subsection 202–3.04 - Removal of Miscellaneous Concrete
Subsection 203-5 - Structural Excavation and Structure Backfill
Section 605 - Steel Reinforcement
Section 1003 - Reinforcing Steel
Section 1006 - Portland Cement Concrete
Section 1011 - Joint Materials
Section 1013 - Bearing Pads

601-2 Materials

Structural concrete uses many related materials, each with its own set of specifications. This often makes structural concrete inspection tedious since Inspectors must refer to and from the various specifications. It emphasizes the point that Inspectors must be experienced at structural concrete inspection and be thoroughly familiar with how various materials are used and where to find their specifications.

The following table summarizes all the materials used in concrete structures and lists where to find the installation and material requirements in the Standard Specifications. The Project Plans and Special Provisions should be consulted first when researching specification requirements for each material.

Material	Installation Specifications	Material Specifications
Concrete		
In general	601, 1006	1006
Cement		1006-2.01, ASTM C150
Water		1006-2.02 AASHTO T 26
Fine Aggregate		1006-2.03(B), AASHTO M 6
Coarse Aggregate		1006-2.03(C), AASHTO M 43
Admixtures		1006-2.04, AASHTO M 154 & M 194, ADOT's Approved Products List
Fly Ash		1006-2.04 (D), ASTM C618 & C311
Related Materials		
Reinforcing Steel	605, 601-4.02(B)	1003, AASHTO M 31 (ASTM 615)
Tie Wire	605-3.01	1003-3, AASHTO M 32
Form Ties	601-3.05(B) (for finishing)	None
Precast Mortar blocks	605-3.01	Same 28 day strength as surrounding concrete when blocks sampled and tested, Arizona Test Method 315
Chairs and Bar Supports	605-3.01	None
Mechanical Couplers	605-3.02, manufacturer's recommendations	605-3.02, ADOT's Approved Products List
Welds	605-3.02, 605-3.01(B)(3)(d) ANSI/AASHTO/AWS D1.5-88	604-3.06 ANSI/AASHTO/AWS D1.5-88
Welded wire fabric	605	1003-4, AASHTO M 55
Epoxy-Coated Reinforcing Steel	605-3.03	1003-5
Steel Plates and Bars	Project Plans or shop drawings, 601-4.02	1004, ASTM A 36 or A 588
Galvanizing when exposed:	601-3.04(B)(3)(f)	ASTM A123 and A125

Material	Installation Specifications	Material Specifications
Bolts: Nuts and Washers:	Project Plans or shop drawings	601-3.04(B)(3)(f), 604-2.03, 606-2.05, or 731-2.02(G), otherwise for bolts ASTM A325, nuts and washers ASTM A563 Exposed parts are galvanized
Prestressing Steel -Wire: -Strand: -Bars:	602-3.06, 601-4.02	602-2.01 AASHTO M 204 AASHTO M 203 AASHTO M 275
Post-Tensioning Ducts	Approved shop drawings, 602-3.05, 601-4.02	602-2.02
Post-Tensioning Hardware & Anchorages	Approved shop drawings, 602-3.04	See steel plates and bars -Bars may be designated AASHTO M 275
Post-Tensioning grout	602-3.07	602-2.03, 1006-2.01
Styrofoam	Project Plans	
Hardboard	Project Plans	
Bearing Pads	1013	1013
Vertical Restrainer - Tempered hardboard: - Expanded Polystyrene:	601-3.09	601-3.09(B), ASTM A603 601-3.09(B), ANSI/AHA Std. A135.4, Fed Spec LLL-B-810 601-3.09(B), ASTM C 203
Joint Materials	601-3.04, see Project Plans and Special Provisions	1011
Water Stops	601-3.04(C)	1011-1
Curing Compound	1006-6.01(C)	1006-2.05, AASHTO M 148, ADOT's Approved Products List
Patching Mortar	601-3.05	601-3.05(B), 1016, 1017, ADOT's Approved Products List
Non-shrink Grout	1017-3	1017-1, 2, & 4 and ADOT's Approved Products List
Epoxies and Adhesives	Project Plans or Special Provisions,601-3.04(B)(3)(g), 601-3.05(B) & 3.09(B), 605-3.04, 1101-5.01	1015, ADOT's Approved Products List
Concrete Stain and Paint	Special Provisions	Special Provisions, ADOT's Approved Products List
Conduit	732-3.01	732-2.02
Pull Boxes	Special Provisions or Project Plans	732-2.04
Grounding Wire	Special Provisions or Project Plans	Special Provisions or Project Plans
Structure Backfill	203-5, Standard Drawing B-19.40 & 19.50	203-5.03(B)
Geocomposites	203-5.02(A) & (B)	1014

Precast Units

When the Contractor chooses to use precast units for minor structures, the Project Supervisor or Lead Inspector should ensure that the units come from manufacturers listed in the project Special Provisions. Only precast units that bear an ADOT stamp shall be allowed for use on the project.

601-3 Construction Requirements

601-3.01 Foundations

There are three different types of foundations for major concrete structures:

1. *Spread footings* consist of a cast-in-place reinforced concrete pad that is poured on the subgrade soil. The pad spreads the load carried by the structure so as not to exceed the bearing capacity of the soil. The construction of spread footings must also meet the requirements of a concrete structure as specified in Section 601.

2. *Piling* (driven piles) are long, H-shaped, structural steel sections driven vertically into the ground much like a nail is hammered into a piece of wood. The piles are spaced only a few feet (meters) apart and are driven to depths of up to 65 feet (20 meters). A reinforced concrete cap is usually poured on top of each group of piles. The cap transfers loads from the structure to the piles. The piles transfer the load to soil through end bearing and friction between the soil and the pile. The specifications for piling are found in Section 603.

3. *Drilled shafts* are designed to behave much in the same way as piles. Both rely on friction between the soil and the pile or shaft to support the structure. Drilled shafts are constructed by drilling a deep vertical hole in the ground and filling it with reinforced concrete. Drilled shafts are used in highly cemented soils or soils with large boulders that would make drive piling difficult to nearly impossible. The specifications for drilled shafts are found in Section 609.

Foundation Inspection

The most important thing an Inspector can do when inspecting foundations is to ensure that the foundation is placed on the same soils as shown in the Project Plans. <u>This means comparing the soils encountered in the field with the soils descriptions shown in the boring logs contained in the Project Plans.</u>

For example, if an Inspector encounters hard clay of low PI where the bottom of a spread footing is to be located, the Inspector should check the boring logs in the Project Plans to ensure that indeed this is the soil shown. If it is not, he or she should bring this discrepancy to the attention of the Resident Engineer; who should contact the Designer. Even if a soil appears firm and stable, the wrong type of soil can adversely affect the long-term settlement and load transfer characteristics of the structure.

The same process of soil identification and comparison should be done for drilled shafts using the auger trimmings as a means of soil sampling and identification.

Approving Foundation Subgrades

Spread footings should not be placed on soft yielding soils even if this is the same soil shown on the Project Plans. Contact the Designer to verify that the soil conditions in the field are the same as they anticipated during their design. When bedrock or highly fractured decomposed rock is encountered, a Geologist retained by the

Designer should be consulted to ensure the geologic conditions are the same as anticipated. This may involve a site visit by both the Designer and Geologist to verify site conditions. The Inspector should document their visits and any instructions to the Department that will be carried out by the Contractor.

The Resident Engineer or the Project Supervisor should approve each foundation subgrade before any work begins. This approval should include a personal inspection of the foundation subgrade by the Resident Engineer or Project Supervisor.

Structural Excavation and Dewatering

Subsection 203-5 of the Standard Specifications and Standard Drawings B-19.30, 19.40, and 19.50 describe the requirements for structural excavation and structure backfill. See Subsections 601-3.07 and 203-5 of this manual for further information. In foundation work where water is present, the water should be pumped out before concrete is placed. When water is pumped out of the forms during the placement of concrete, the pump inlet should be in a sump outside the forms. Drainage of the forms should be arranged so that no water will be flowing through the forms.

The concrete should not be shoveled or pulled through the water. If it is not possible to remove the water completely, the placement of concrete should begin at one end by means of a tremie, bringing the concrete above the water. The water should be forced ahead of the concrete mass by placing the concrete with as little disturbance as possible, using moderate vibration to settle the leading edge. Additional cement may be needed in the concrete mix when placing it under water. Check with the Designer.

601-3.02 Falsework and Forms

(A) Design and Drawings

Resident Engineers, Project Supervisors, and Inspectors who oversee structural concrete construction must clearly understand the differences between falsework and forms (or formwork). The second and third paragraphs of Subsection 601-3.02(A) define both.

Forms (or *formwork*) simply contain the concrete and give it shape. Fresh concrete behaves like a fluid and forms contain the concrete until it has time to harden. The forms resist the lateral fluid pressure fresh concrete exerts on its container. Forms give shape to the concrete until it hardens and can be used to provide a desired surface texture like rustication.

Falsework does not contain concrete. It holds up concrete until it has enough strength to support itself. When concrete is suspended in the air, falsework is used to carry the vertical loads induced by both the weight of the fresh concrete and any formwork used to contain the concrete.

In the simplest of terms, falsework holds it up and formwork holds it in. The best way to visualize the difference is to think of a water tower. The tank at the top of the water tower contains the water. It is the formwork. Its only job is to hold the water without leaking. The tower itself is the falsework. It holds up both the tank and the water in the air.

Exhibit 601-3.02-1 shows the formwork for a wall. Note that the wall is sitting on the ground on top of a footing. The vertical load (weight of the fresh concrete) is supported by the footing that rests on the ground. This structure has no falsework. It would be like the tank from a water tower sitting on the ground.

Exhibit 601-3.02-1 shows the typical components of falsework. You might see this type of falsework under a cast-in-place box girder bridge or slab bridge. Concrete is usually placed directly on top of the plywood sheathing. The sheathing contains the concrete (keeps it from spilling to the ground) and supports the concrete by transferring its weight to the joists. In this case, the sheathing acts as both formwork and falsework. The joists transfer the weight of the concrete (and the sheathing) to the stringers. The stringers transfer their loads to the vertical shores until the loads reach the mudsills, which in turn, pass all the loads to the ground.

Inspectors and Resident Engineers often confuse formwork with the falsework. The following are examples of formwork and falsework:

Formwork:

- catch basins and manholes;
- abutment walls and spread footings;
- retaining and noise walls (regardless of height);
- pier columns (both vertical and curved);
- box culvert bottom slabs and side walls; and
- interior cast-in-place girders.

Falsework:

- bridge decks (only the sheathing acts as formwork and falsework);
- deck overhangs (only the sheathing acts as formwork and falsework);
- exterior cast-in-place girders;
- pier caps (cap beams);
- abutment wing walls with sloping bases;
- box culvert top slabs;
- shoring systems for cast-in-place box girder bridges; and
- soffit fills.

Drawings and calculations must be submitted by the Contractor for all falsework on the project in accordance with Subsections 601-3.02(A) and 105.03. Exhibit 601-3.02-2a and 601-3.02-2b are examples of falsework drawings for a bridge superstructure. The falsework is a combination of steel and timber members that is typical for most bridge falsework. The stringer, joists and cap beams are steel I-beams, while the shores, decking, bracing, corbels, sills and wedges are timber.

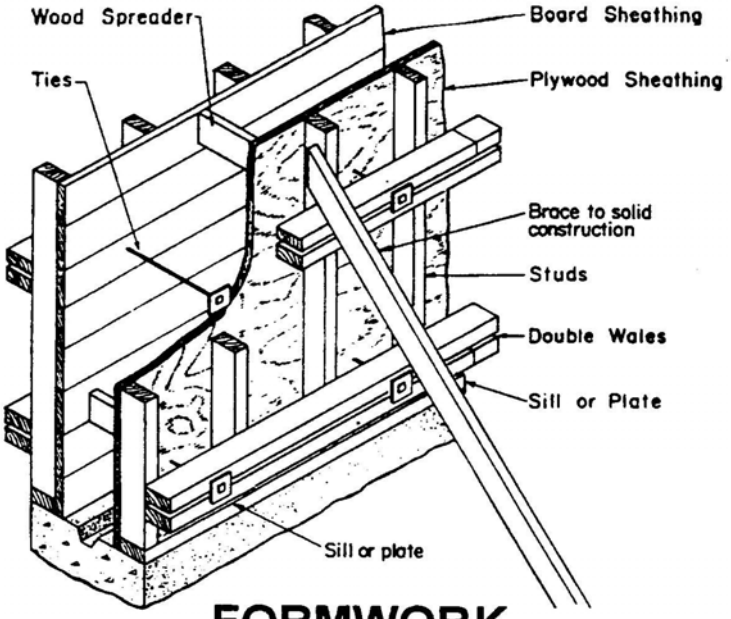

FORMWORK

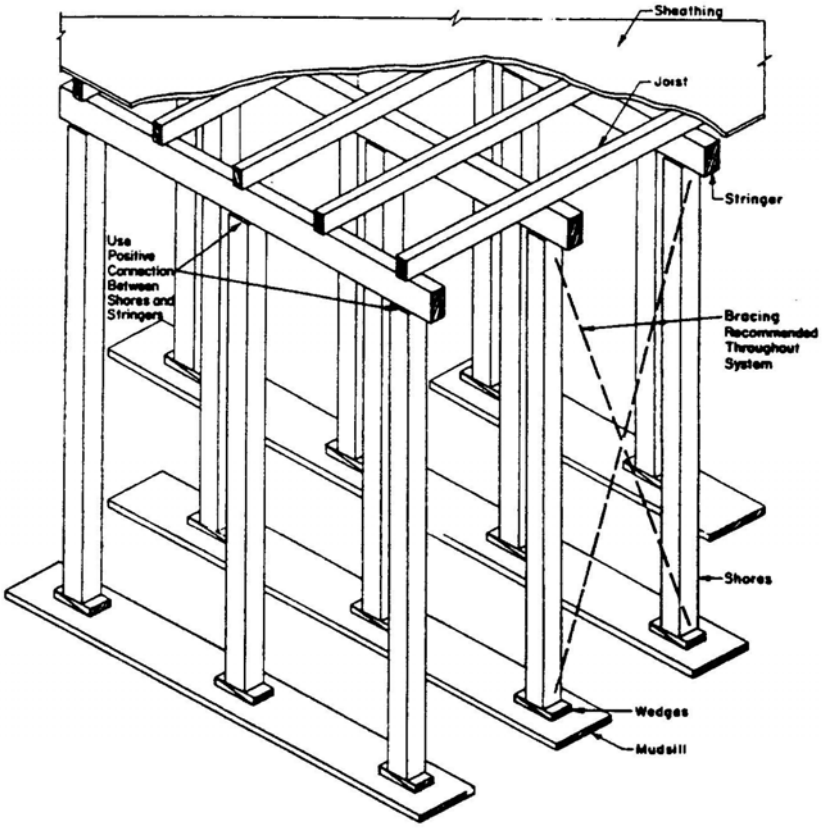

FALSEWORK

Exhibit 601-3.02-1 Formwork and Falsework

Falsework designs must bear the seal of a Professional Engineer registered in Arizona. This includes shoring systems supplied by out-of-state manufacturers. A few exceptions are:

- all minor structures;
- the top slabs for box culverts less than or equal to 12 feet (3.6 meters) wide; and
- abutment wing walls with sloping bases.

Falsework drawings and calculations shall be submitted to the Designer of the structure for review and approval. Before submitting these documents to the Designer, the Resident Engineer should check for:

- five sets of drawings and calculations;
- legible drawings and calculations sealed by a Professional Engineer registered in Arizona; and
- correct drawing size and border requirements including a blank space on the drawing for approval stamping.

See Subsection 105.03 for further information. A reproducible set of falsework drawings is not required unless requested by Bridge Group.

The design and detailing requirements for falsework are listed in Subsection 601-3.02(A). The Resident Engineer may want to review the submitted drawings and calculations for general conformance to this subsection before submitting them to the Designer. The Resident Engineer may choose to review and approve falsework plans for very simple structures where there is no doubt as to the adequacy of the falsework.

On railroad grade separation structures, a copy of the falsework plans must be sent to the Railroad Company's Engineering Department for approval. The railroad companies need long lead times for review and approval.

ADOT's falsework policy can be found in Subsection 1.8.3 of the *Bridge Design and Detailing Manual* that describes some of the geometric and clearance tolerances of falsework.

Other Submittals

On precast girder bridges, the Contractor shall submit survey data for each precast girder showing the elevation at each tenth point along the top of the girder after it has been set on the bridge. In addition, data collected on camber and camber growth at the fabrication yard should be submitted (see Project Plans and Subsection 602-3.06(A) of this manual). This information must be submitted and reviewed prior to deck forming. The Project Supervisor shall forward this information to the Designer.

The Designer will check to ensure that the girders do not encroach into the deck slab due to excessive camber. Sometimes adjustments to the deck profile or girder bearing seats are needed to maintain a minimum deck thickness between each girder. If the deck forms and reinforcing steel are already in place, these adjustments could become very time consuming and costly. It is a good practice to check the elevations on top of the girders ahead of time and make any field adjustments if necessary.

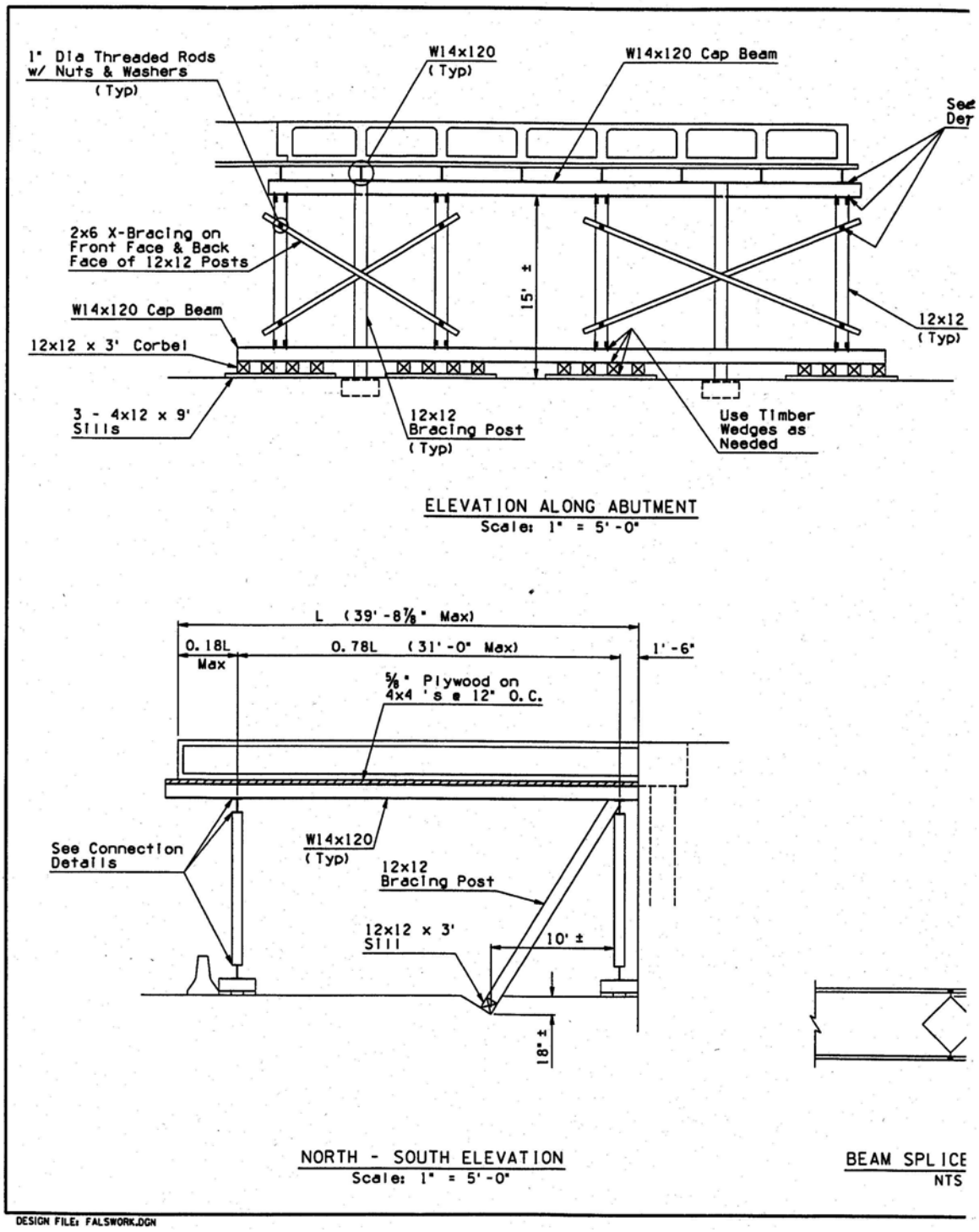

Exhibit 601-3.02-2a Falsework Drawings

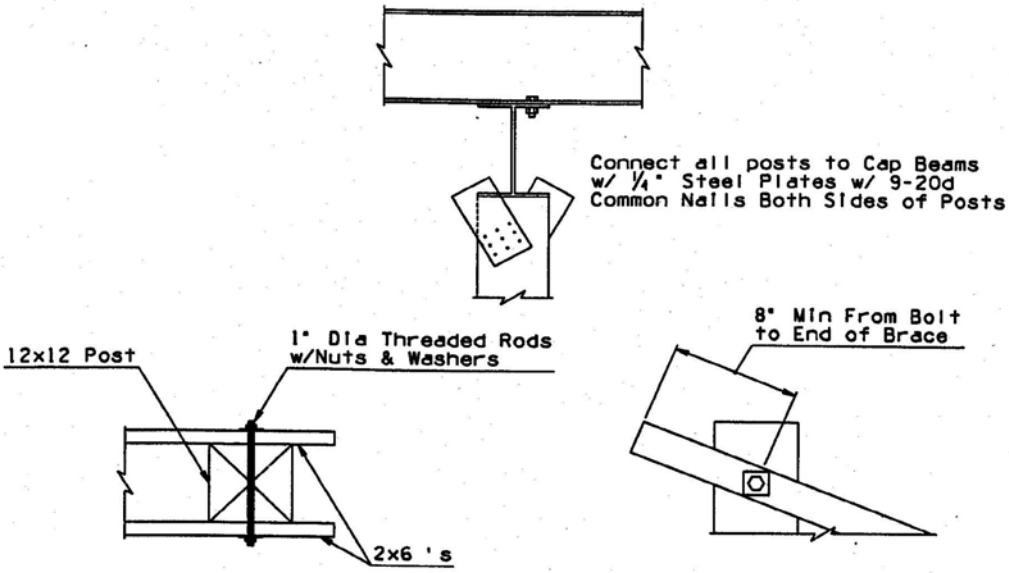

TYPICAL TIMBER CONNECTIONS

NTS

NOTES:

1. Construction specification - Arizona Department of Transportation Standard Specifications for Road and Bridge Construction, Edition of 1990.
2. Materials:

   ⅝" Plywood - APA Exterior-type STR I
   4x4 Dimension Lumber - Douglas Fir-Larch No. 2
   2x6 Dimension Lumber - Douglas Fir-Larch No. 1
   12x12 Dimension Lumber Post - Douglas Fir-Larch No. 1
   Structural Steel - ASTM A36

3. Soil Allowable Bearing Stresses are assumed to be 3000 psf on natural and field compacted materials.
4. All materials shall be in new or good condition.
5. Members shall be nailed, bolted, clamped, or welded where slippage is possible.
6. All steel members must be connected by means of welds and/or bolts. Use ⅝" ø A325 bolt or 3" long ¼" fillet weld.
7. For beam splice, use complete-penetration groove weld butt joints on the flanges. Use weld plates on both sides of the web. Each weld plate shall be ½ the thickness of the beam web. Apply a fillet weld all around each plate the thickness of the plate.
8. All electrodes shall be E70xx, and all welding is to be done by a certified welder.
9. The deflections of all beams are limited to L/270.
10. No changes are permitted without the Engineer's approval.

	NAME	DATE
DESIGN	YC	05/99
DRAWN	TST	05/99
CHECKED	KTD	05/99

ENTRANCO

RAMP SHORING

ROUTE	MP POST	STRUCTURE NO.
I-17	-	-

DWG. NO. -

Registered Professional Engineer (Structural) CERTIFICATE NO. [redacted] Date Signed [redacted] ARIZONA, U.S.A.

Exhibit 601-3.02-2b Falsework Drawings

Formwork drawings and calculations are required for the cast-in-place girders (webs) on box girder bridges (see Subsection 601-3.02[C]). These drawings shall go through the same submittal and review process as falsework drawings. As a minimum, formwork plans should include:

- type, sizes, and grade of materials used for form ties, spreaders, sheathing, studs, wales, and braces;
- formwork layout drawings including spacing of ties, studs, wales and braces;
- connection details;
- assumed concrete pressure distribution, rate of concrete placement, concrete temperature, and height of concrete drop into the formwork;
- allowable capacities of form ties and anchors and their calculated factors of safety; and
- design stresses, deflections, and allowable capacities for the individual formwork members, including braces, in accordance with Subsection 601-3.02(A).

The girder webs are the most important structural concrete members for cast-in-place box-girder bridges. In the past, the Department has experienced form blowouts and significant lateral movement of the forms due to inadequate bracing. This can result in significant deviations in girder alignment that can over-stress the girder webs and cause significant friction loss in the post-tensioning cables. Formwork drawings are intended to assist the Contractor in developing a well thought-out plan and avoid unforeseen problems during the concrete pours of these very important (and difficult to repair) bridge members.

See Subsection 601-3.02(C) of this manual for further information on formwork.

(B) Falsework Construction

Once falsework drawings have been reviewed and approved, the Resident Engineer or Project Supervisor should distribute copies to the Inspectors. Inspectors should oversee the falsework construction and inspect the work to eliminate obvious defects and safety hazards. Falsework failures and collapses are not uncommon. Common causes include:

- inadequate bracing;
- lack of attention to falsework details during erection;
- using inferior materials compared to what is specified;
- shores or vertical members not plumb;
- unstable soils under mudsills;
- vibration due to construction traffic or concrete placement;
- inadequate control of concrete placement (pouring too fast or loading the structure unevenly); and
- improper stripping and shore removal.

Keep these reasons in mind as you observe the Contractor erect and remove falsework. Even though the Contractor will have a Professional Engineer certify the falsework construction, it is still necessary for the Inspector to observe the work and ensure the falsework is erected correctly without large amounts of rework. The Contractor is still ultimately responsible. Any rework to correct deficiencies or a failure that shuts down the project benefits no one and causes a lot of unnecessary aggravation. Additional conditions that should be monitored are as follows

Footings and Mudsills

- Soil type is the same as identified in the approved falsework drawings.
- Soil is firm, stable, and has uniform contact under the mudsill.

- Top surface of the mudsill or footing is level.
- Mudsill and/or footings are protected from wash-out or undermining with proper surrounding drainage.
- Mudsill or footing are set back reasonably far enough from the edge or toe of slopes.

Piling (when used)

- Piles are placed within specified driving tolerances.
- Piles are driven to the allowable bearing values.
- Pile caps are properly set and level to ensure uniform bearing over the pile group.

Timber Falsework Members

- Timber is free of noticeable defects for the grade specified (splits, open knots, rots, and cuts).
- Timber appears well seasoned so warping and shrinkage will be minimal.
- All members are in full contact with each other.
- Size, spacing, length, and grade of members are the same as shown in approved drawings.
- Diagonal bracing is installed as per drawings.
- Connections are checked for tightness with no loose hardware.
- Vertical members are plumb and horizontal members are level.
- Camber is provided when required to offset dead load deflections.
- Full bearing connections are examined for crushing.

Only double wedges shall be used between the mudsill and the supporting posts (see Exhibit 601-3.02-3). The wedges must be kept tight and placed so that there will be no eccentric loading. They should be examined frequently during the placement of concrete in the deck and adjusted when necessary to conform to design elevations of the deck floor. Wedges should not be stacked more than two high. If two wedges will not serve the purpose, a longer vertical member is needed.

Structural Steel Falsework Members

- Salvaged beams and other steel shapes are examined for section loss, web penetrations, rivet, or bolt holes, and local deformation that could affect the member's load carrying capacity.
- Column or pile bents are set plumb and beams are placed level.
- Member size and spacing in conformance with the shop drawings.
- Bracing is installed per drawings, especially where called out on beam compression flanges.
- Bolted connections are sufficiently tightened with the proper number of bolts.
- Welded connections are done to prescribed standards by a certified welder (see Subsection 604-3.06 of this manual).
- Splices are located only at locations shown in the drawings.
- Allowances made for jacking the bridge structure for members are located under a hinge (see Project Plans and Subsection 601-3.04 of this manual).

Manufactured Steel Shoring Assemblies

- Manufactured shoring system is in full compliance with manufacturer's recommended usage.
- Base plates, shore heads, extensions, or adjusting screw legs are in firm contact with the foundation or support.
- Shoring tower assemblies are set to the correct spacing.

- Cross-bracing is in conformance with the drawings, including frame-to-frame braces and tower-to-tower braces.
- Screw leg extensions are within the allowable limits or adequately cross-braced, and snug to tower frame.
- Tower frames are checked for plumbness.
- Top U-heads are in full contact with the joist or ledge, and hardwood wedges are snug.
- Frames are examined for section loss, kinks, broken weld connections, damaged cross-bracing lugs, or bent members.
- Loads on shore heads are applied concentrically, and not eccentrically.
- All locking devices are in the closed position.
- Guy wires are adequately attached to towers and ground support.
- Allowances are made for jacking the bridge structure for members located under a hinge (see Project Plans and Subsection 601-3.04 of this manual).

Falsework Protection

- Barriers and crash attenuators are placed in correct locations, lengths, and numbers.
- Warning and clearance signs are up.
- Safety (banger) beams (if required) are set at the correct height and offset distance from the structure. The ADOT Traffic Operations Center, the District Permit Office, and local government officials (fire, traffic, and community relations) are notified of low clearance.
- Horizontal clearances are maintained between shores and barrier.
- Falsework members adjacent to barriers are properly bolted or mechanically connected (see Subsection 601-3.02(A) and approved drawings).
- Falsework bracing and bolted joint connections are installed as the falsework is going up and not left until the entire structure is completed.
- Lane widths are correct under the falsework.
- Signing, striping, barrier, and barricades are set in accordance with approved traffic control plans.

Construction personnel are reminded that the lower clearances over traffic, caused by the falsework, will necessitate early warning signs, possible detours, and notification of the District Permits Supervisor so that loads exceeding 14.5 feet (4.45 meters) may be warned and rerouted. An Inspector should verify the height of falsework over traffic openings and record the measurements in their daily diary.

AASHTO's Construction Handbook for Bridge Temporary Works is an excellent reference guide for Resident Engineers and Project Supervisors who oversee falsework construction.

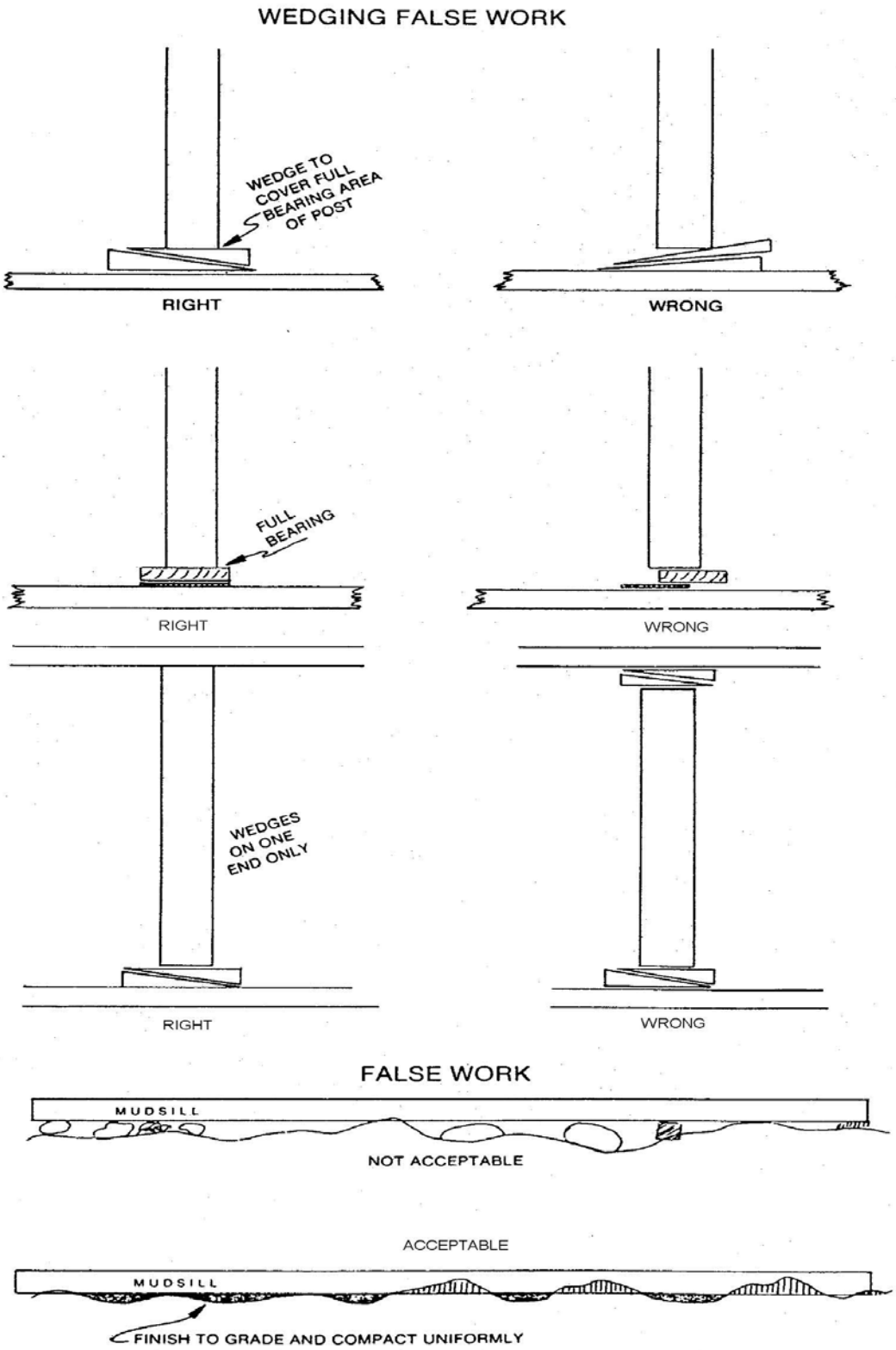

Exhibit 601-3.02-3 Falsework Foundations

Pour Certificate

The Contractor's Engineer shall provide a pour certificate certifying that all falsework has been constructed according to the approved drawings. This *pour certificate* can take the form of a letter bearing the signature and seal of the Engineer with a statement that the erected falsework was in accordance with the approved falsework drawings. Do not allow the Contractor to place concrete in any forms above falsework until you have received the Engineer's pour certificate (a fax is OK).

Setting the Falsework Accurately

Inspectors and Contractors often overlook the importance of setting falsework. The elevation, slope, cross fall, and shape of the entire structure is based on how accurately the falsework is placed. Carpenters use the falsework decking or waste slab as a reference for sizing all their formwork for each structural member and ironworkers use it to set their bar supports for reinforcing steel in the beam and deck slabs.

Tolerances for falsework decking are based on Subsection 601-4.02(A)(2). Since the falsework decking is used as the bottom form for slabs, girders and beams, the decking has a – 1/8 inch to +1/4 inch (-3 mm to +6 mm) elevation tolerance everywhere on its surface. Wedges and screw jacks are used to help meet these tolerances. The Inspector should have the Contractor's survey crew verify that the falsework has been set to this accuracy. Some allowances are made by the Contractor (usually in the falsework drawings) for falsework settlement and joint crush. Camber is added to account for dead load deflections once the structure is poured.

Soffit Fills and Waste Slabs

One method for constructing a cast-in-place box girder bridge is to cast the bridge piers and abutments first. The area between the piers and abutments is filled with dirt. A thin concrete slab, called a *waste slab*, is poured on top of this dirt. The waste slab acts as the bottom form for the bridge superstructure while the dirt, called a *soffit fill*, acts as the falsework.

Working drawings, similar to falsework, must be submitted by the Contractor (see Subsection 601-3.02[A]) for soffit fill and waste slab construction. Information should include:

- the soil type;
- fill placement and compaction methods;
- compaction densities to be achieved;
- fine grading methods;
- grade control for the waste slab;
- placement and finishing methods for the waste slab;
- waste slab thickness and strength; and
- quality control and repair procedures for out of tolerance areas.

Although the soffit fill and waste slab are temporary, the Contractor must construct both to very close tolerances. Like falsework decking, the waste slab is used as a reference for constructing the entire bridge superstructure (see the previous discussion on setting falsework accurately).

Subsection 601-3.02(C)(3) requires a ±1/4 inch (6 mm) tolerance on the waste slab for both grade and smoothness. The soffit fill should be constructed to similar tolerances.

There are no thickness or strength requirements for waste slabs. Typically Contractors will pour a slab 2.5 inches (60 mm) thick with 2500 psi (20 MPa) concrete. However waste slabs must meet the requirements of 601-3.05(A) since they are the formed surface for the bottom slab of the bridge. Severe cracking and faulting at the cracks are cause for rejecting the waste slab. The intent is to have a waste slab that presents "a pleasing appearance of uniform color and texture commonly achieved by the use of clean smooth plywood forms." This is the standard that Inspectors must use to gauge the appearance of waste slabs.

Verify the waste slab is carefully surveyed. It should be checked with a straight edge before any forming or ironwork proceeds. It is very important for the Inspector to work closely with the Contractor to ensure both the soffit fill and waste slab are built correctly. Other requirements for waste slabs can be found in Subsections 601-3.03(A) and 1006-5.01, which refer to slab requirements in general.

Telltales

Some type of telltales should be provided by the Contractor to indicate the amount of settlement occurring during the placement of deck and pier cap concrete. Telltales are usually firmly attached to the bottom of the forms at various locations and are extended to a reference mark, easily observed by a person positioned under the structure. A reference mark is placed on a stake driven firmly into the ground. The telltale and the ground reference provide a direct indication of falsework movement that can be checked against the calculated deflection. Maximum allowable deflections (vertically and horizontally) are 1/240th of the unsupported span of the falsework. For example, plywood forms spanning 68 inches (1.73 meters) between girders should only deflect to a maximum of 1/4 inch (7 mm).

It is important for Inspectors to enforce maximum deflection requirements. Excessive falsework deflections can:

- result in structural members that sag and end up below the desired finished elevation;
- produce unsightly bulging in the hardened concrete;
- add more weight to the structure than anticipated by the Designer; and
- result in significant concrete quantity overruns.

Safety

Bridge construction continues to be one of the most dangerous activities in public works construction. Some of the hazards are obvious, such as the risk of falling, while others are not (i.e., the overturning of a crane). OSHA has numerous safety standards related to concrete construction (Subpart Q is the main one). These standards apply both to the Contractor and ADOT's field staff. The standards specifically related to bridge and concrete work include:

Description	Standards
Fall Protection	Subpart M
Safety Belts, Lines and Lanyards	1926.104
Safety Nets	1926.105
Working over Water	1926.106
Formwork and Falsework	1926.703
Concrete Equipment	1926.702
Cranes	1926.550
Masonry Walls	1926.706
Illumination	1926.26, 1926.56
Fire Protection	1926.24 & Subpart F
Housekeeping	1926.25, 1910.176
Personal Protective Equipment	1926.28
Foot Protection	1910.136
Head Protection	1926.100
Eye and Face Protection	1926.102
Signaling	1926.201
Slings	1910.84
Hand Tools and Jacks	Subpart I
Scaffolding	Subpart L
Pile Driving	1926.603
Demolition	Subpart T
Ladders and Stairways	Subpart X

This is not a complete listing. It is meant to point some of the key safety standards you should be aware of when working in and around any structure under construction.

The Resident Engineer or Project Supervisor has a duty to meet with the Inspectors during each phase of bridge construction and discuss safety procedures. As a minimum, the Inspectors should be made aware of:

- tripping, falling, and impalement hazards;
- when fall protection equipment will be required;
- how to obtain and how to use fall protection equipment;
- safety procedures around heavy equipment, especially cranes;
- procedures for climbing formwork and falsework;
- standards for hand rails, ladders, stairways, platforms and when they are required;
- required personal protective equipment such as hard hat, safety shoes, eye and ear protection, etc.; and
- procedures for reporting accidents and near misses.

An important new OSHA provision applies to fall protection when erecting formwork or falsework 1.8 meters (6 feet) above the ground. It also applies to setting of precast girders. OSHA Standards 1926.501 and 1926.502(k) require the Contractor to implement a fall protection plan and safety monitoring system for work where it is not feasible to use handrails, safety nets, or personal fall arrest systems (belts and lanyards). Inspectors need to be aware of the procedures involved in this fall protection plan since it applies to them as well

(C) Forms Construction

In forming concrete, the Contractor's objective is to obtain the maximum reuse of forms and to use standard material sizes with a minimum of cutting and fitting. The appearance of finished concrete is largely controlled by the condition of the form facing, the accuracy of the carpentry, the strength of the forms, and the adequacy of the bracing or falsework. There is a trade-off between form reuse and appearance. Maximizing form reuse also maximizes the amount of pointing and patching done after the forms are removed which detracts from the appearance. Inspectors and concrete foremen should agree ahead of time when formwork has reached a condition that is no longer acceptable. The following information in this subsection is intended to provide the Inspector guidance in this area

Form Appearance and Mortar Tightness

Generally the Contractor is not required to submit forming plans to the Department for review. The exception is girder webs on box-girder bridges (see Subsection 601-3.02(C)(1) of the Standard Specifications and Subsection 601-3.02(A) of this manual). On more complicated structural elements, the Contractor may develop a set of forming plans for internal use to minimize the amount of forming materials used. The Resident Engineer and Inspectors should meet with the Contractor's concrete foreperson ahead of time to answer questions about formwork requirements and discuss the levels of workmanship and concrete appearance acceptable to the Department. Once the Contractor has ordered the forming materials, it will be much more difficult to change forming procedures.

Mortar tightness is often an issue that comes up between an Inspector and a foreperson. This is due to the fact that carpenters try to make the same size form fit as many different spaces as possible. Mortar tightness is not the same as water tightness and depends on the slump of the concrete, its temperature, the amount of vibration the concrete receives, and the amount of fluid pressure it exerts against the form. A foreperson and the

Inspector will have different opinions on what is mortar tight. These differences should be resolved ahead of time before the first form is placed. Inspectors need to insist on mortar tightness for the following reasons:

- Leaking mortar can cause voids around the rebar next to the leak.
- Leaking mortar results in an uneven appearance of the concrete surface including dark form lines.
- Loss of mortar weakens the concrete in the area near the leak.
- Mortar is considered a pollutant and must be kept out of all washes and rivers.
- Mortar that leaks into internal cells of box girders and beams will add dead load to bridge.

Applying tape or strips of tin over form joints is preferred to using backer rod. Backer rod often becomes loose and allows mortar to flow when the concrete is vibrated. Form joints are most prone to leaking during concrete vibration. Do not allow the Contractor to cut back on vibration in an effort to reduce form leakage.

The Standard Specifications describe the requirements for concrete forms. There are general requirements that apply to all types of forms. There are special requirements for wood forms as well as for metal, fiberglass, and other types of forms. Metal and fiberglass forms must meet all the requirements specified for wood forms.

When inspecting formwork, the Inspector should be concerned with these three outcomes:

1. Can the forms safely hold the concrete without shifting, leaking, falling apart or deflecting excessively?

2. Will the forms give the correct shape and dimensions to the hardened concrete, including the correct elevation and location?

3. Will the surface of the concrete have the desired appearance?

More detailed information on inspecting formwork can be found in ADOT's training manuals as well as in the references cited at the end of this chapter.

Form Finish

The formwork specifications regarding the appearance of the hardened concrete often cause the most difficulty for Inspectors and the Contractor's carpentry staff. Formed concrete surfaces require either a Class I or Class II finish. See Subsection 601-3.05 of this manual and the Standard Specifications for further details on these finishes.

Questions often arise as to how many imperfections, patches, openings, and other defects in the Contractor's forms are needed to cause a rejection on the Department's behalf. To answer these questions, the Department has published the *Concrete Finish Reference Manual*. Inspectors should refer to this manual when inspecting formwork to anticipate any problems the Contractor's forms may cause with the desired finish.

Forms have been rejected for not producing an acceptable finish in accordance with the *Concrete Finish Reference Manual*. If there was any doubt that the Contractor's forms would not produce the desired finish, Resident Engineers have used the reference manual's guidelines instead of complying with the formwork specifications in Subsection 601-3.02(C). Strict compliance to Subsection 601-3.02(C) actually produces a formed finish of higher quality than what is generally shown in the reference manual.

Form Release Agents

Contractors use form oil or a chemical to preserve the forms for reuse and to reduce the adhesion between the form and the concrete. Excessive use of such material may discolor the concrete and should be avoided particularly on sections of the structure where appearance is important. The form oil must not adversely affect the concrete. When architectural concrete is specified, the formliner manufacturer should approve the form release agent. The Department leaves the approval of the form release agent to the Resident Engineer who usually delegates that authority to the Inspector.

Rate of Pour

Forms must be designed and constructed to withstand the fluid pressure of fresh concrete plus any live loads (vibration and worker activities). The horizontal fluid pressure against forms on walls, columns, piers, etc. is very high if the concrete is placed rapidly. Slower placement allows the bottom concrete to settle and partially set before the top section is placed. This lowers the horizontal pressure near the bottom forms. Contractors must control the rate of placement so that the side forms do not bulge excessively or fail. Bulging can adversely affect the appearance of concrete while form failures jeopardize the safety of everyone working around the forms. It is suggested the Inspector check with the Contractor's foreperson regarding the maximum pour rate that the forms are designed to handle.

(D) Removal of Falsework and Forms

The importance of distinguishing between falsework and formwork becomes apparent when discussing the removal of either one after the concrete has hardened. Refer to Subsection 601-3.02(A) of this manual if you are not sure of the difference between the two.

Forms

Formwork can be removed once the concrete has set and has adequate time to harden. Concrete columns as high as 21 feet (7 meters) have had their forms removed the next day once the concrete stood up on its own. The Contractor must obtain the approval of the Resident Engineer before any forms can be removed.

Upon form removal, the Contractor must continue to cure the concrete until seven days after the pour (see Subsection 1006-6).

When a Class II finish is required, the Contractor cannot spray the exposed concrete with curing compound until the Class II finish is completed and inspected. When no other acceptable curing method is available, Inspectors have required the Contractor to leave forms on for seven days unless the Contractor can complete the Class II finish in a reasonable amount of time (usually the same day the forms are removed). For bridge barrier and other concrete surfaces above the bridge deck, the Contractor is allowed up to four days to complete the Class II finish when early removal of the forms is allowed.

Falsework

Falsework removal must follow strict requirements for both concrete strength and age.

The strength requirement ensures that the concrete can adequately support its own weight without cracking or deflecting excessively.

The age requirement ensures that the concrete is mature enough to resist the long-term affects of creep. Creep is the prolonged deformation of concrete due to sustained loading. Creep is what causes concrete bridges to sag.

Once the falsework is removed, the concrete begins to creep under its own weight. Young concrete will creep much more than mature concrete even when the strengths are similar. As a result, it is important for the Inspector to enforce the time limitations in the Standard Specifications even if the Contractor can show early cylinder breaks equal to or greater than the required strength.

Occasionally the Contractor will want to temporarily remove parts of the falsework in order to remove the formwork that can be used elsewhere on the project. No temporary removal of falsework supports such as stringers, joists, shores, or mudsills shall be allowed even for a few moments. The concrete must be continuously supported until the strength and time requirements are met. Occasionally lateral braces can be removed early with the approval of the Resident Engineer.

On post-tensioned box girder bridges, falsework (except for the deck overhangs) must stay in place until after the grouting of the post-tensioning ducts. This is a safety precaution in case there is an anchorage failure. Until the prestressing strands are bonded to the post-tensioning ducts, the ends of the bridge carry all the prestressing loads. If the anchors fail (and this can happen), the falsework is in place to catch the superstructure as it falls. The falsework is also there to serve as a working platform during grouting. If there is a leak in any of the post-tensioning ducts, the Contractor will need to have access to the underside of the bridge to find and repair the leak. Partial removal of some of the falsework members is allowed to provide access to a bottom portion of the bridge.

The Resident Engineer should discuss the falsework removal procedure with the Contractor to verify each element can be done safely both in terms of the traveling public and the on-site workers. The falsework drawings may have a specific removal sequence that the Contractor must follow. The Inspector should keep a schedule of placement dates and projected dates for removal of falsework in order to avoid any premature removals.

601-3.03 Placing Concrete

(A) General Requirements

The Resident Engineer may suspend a pour due to weather limitations. Like other types of concrete, structural concrete has both temperature restrictions and precipitation limitations. Subsections 105.02 and 1006-5 can be used by the Resident Engineer to suspend work if it is in the best interest of the Department. Keep in mind that only the threat of precipitation is needed to justify suspending the work. You don't have to wait until it is actually raining or snowing.

The quality of the project work should always come first in the Inspector's mind. Quality is the main reason why Inspectors are assigned to a project. Inspectors must not worry about the schedule when it comes to compromising the requirements of the Project Plans and specifications. Let the Resident Engineer worry about the schedule. Stay focused on the Project Plans and specifications and help the Contractor to achieve 100 percent compliance.

Inspectors need adequate time to inspect structural concrete forms, falsework, and steel reinforcement prior to concrete placement. This amount of time will vary from just a few minutes for a concrete catch basin to a few hours for a large bridge deck. Contractors on the other hand want to place concrete the moment the

forms are up and the last piece of reinforcing bar is tied in place.

The Inspectors and the Contractor's foreperson should meet ahead of time to discuss pour schedules, steel placement activities, steel and formwork inspection requirements, and traffic and safety issues. The Contractor's foreperson is often under enormous pressure to meet deadlines and stay on schedule. Shortages of materials and labor, which are usually not the fault of the foreperson, just add to the pressure.

When there is finite amount of time to place forms and steel, foremen and forewomen usually try to make up for any delays by trying to shorten the inspection time. Inspectors then feel rushed and pressured to accept sub-standard work in an effort to help out their "partner." Partnering was never meant to allow relaxation of the contract specifications. Here are some do's and don'ts to help the Inspector and the Contractor get through these tough situations:

Do:

- frequently perform inspections as forms are going up and steel is placed to catch errors early on;
- meet with Contractor's foreperson daily to discuss quality issues and progress;
- point out recurring non-compliance issues to the Contractor no matter how unpleasant it becomes;
- keep the Contractor informed of your inspection time requirements;
- adjust your inspection schedule if the Contractor experiences delays (be flexible);
- escalate chronic, unresolvable, non-compliance issues no matter how small they are;
- develop a feel for how the foreperson plans and executes the work, and adjust your daily work hours accordingly;
- go through the Project Plans with the various trade foreperson to verify they haven't missed some important details you may have noticed;
- keep ahead of the Contractor by looking through the Project Plans and specifications to see what could get the Contractor into trouble later on;
- build a relationship based on cooperation and professional courtesy; and
- always be willing to help the Contractor clarify and interpret the Project Plans and specifications.

Do Not:

- allow the Contractor to rush you by cutting short your inspection time;
- close the lines of communications between you and the Contractor no matter how tough things become;
- take the Contractor's lack of attention to the contract specification requirements personally;
- delay inspections to the very last minute;
- keep to yourself defects you see in the Contractors work;
- compromise yourself or the specifications just to meet a schedule (escalate instead);
- become reactionary if the Contractor ignores you or does not take you seriously;
- get into a power struggle with the Contractor over pour scheduling versus inspection time; and
- direct the Contractor how to perform the work.

Skewed Bridges

All bridges that are built on a skew have special requirements that are sometimes overlooked by Contractors and Inspectors. Exhibit 601-3.03-1 shows the basic configuration of a skewed bridge. Typically the abutments are not perpendicular to the centerline of the roadway. They are set at some angle other than 90 degrees and can be as low as 45 degrees. However the girders run parallel to the roadway centerline. As a result, the angle between the abutment and the girders is not 90 degrees.

The concern here deals with the pouring and finishing of bridge decks. The bridge deck must be poured

and finished in the direction of the skew angle and not perpendicular to roadway centerline.

Typically bridge decks have camber built into them to offset the long-term effects of creep. Creep affects the girders under the deck and causes the girders to sag with time. To ensure this sag does not show up in the deck, the Bridge Designer will set the deck elevations higher at the midpoint of the girders than at the ends where the girders come in contact with a pier or abutment. In order to build this camber into the bridge deck, the finishing machine must come in contact with the same point of each girder at the same time (see Exhibit 601-3.03-1). The girders must be loaded uniformly so they all deflect evenly.

The best way to achieve the proper deck camber is to set the finishing machine at the same skew angle as the piers and abutments, not perpendicular to the roadway centerline. On bridges with a slight skew (less than 20 degrees), the Designer may allow the finishing machine to be set perpendicular to centerline. However, the Resident Engineer should obtain the Designer's approval before allowing the Contractor to finish in this direction.

Setting the finishing machine to finish along the skew angle requires a longer machine and some rail adjustments on the Contractor's part. Finishing along the skew is usually something most concrete foreperson's do not anticipate. Notify the Contractor about this requirement at the pre-pour meeting.

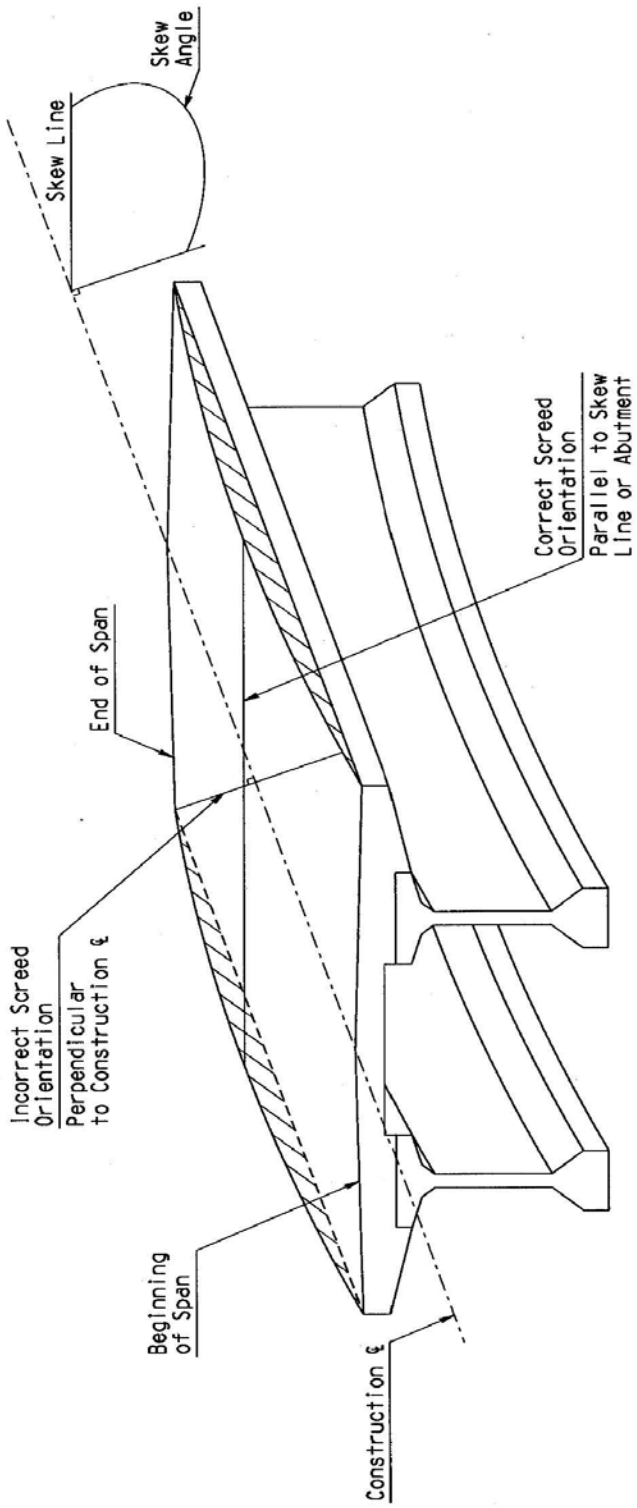

CORRECT SCREED ORIENTATION FOR SKEWED BRIDGES

Exhibit 601-3.03-1 Skewed Bridges

Tining on a Skew

The tining of the bridge deck becomes a problem when the deck is poured on the skew angle. Tining the deck transversely to the roadway centerline can lead to uneven tining on skewed bridges. The tining rake crosses each girder at a different point along its span. The rake may start near the low point of an exterior girder (at a pier for instance) and cross the midpoint of one of the interior girders. This causes uneven contact pressure since the deck is higher at the girder midpoints due to camber.

The solution is to texture the deck at the same skew angle that it was finished. However this is a direct violation of Subsection 601-3.05(D). The Department does waive this provision for skewed bridges when the bridges must be finished at the skew angle. The intent is to get some type of texturing into the deck. The angle of the texture is not as important as its presence.

Rate of Placement and Cold Joints

On small structures, especially short sections of retaining wall and box culverts, the Resident Engineer may waive the minimum pour rate in Subsection 601-3.03(A) to avoid over loading the Contractor's formwork.

The Standard Specifications specify minimum pour rates. The pour rates are intended to keep cold joints from forming in a structure. A cold joint is formed when fresh concrete is poured against partially set or hardened concrete. Cold joints can form when there is a long interruption during a concrete pour or when the pour rate is too slow to keep each layer of fresh concrete in contact with a previous layer of concrete that is still fresh. Loads and stresses in the structures can cause the concrete to crack or pull apart at the cold joint.

Cold joints are dependent on the concrete's set time that is affected by temperature, admixtures, and the type of cement and pozzolans used. There is no rule of thumb that says when a cold joint will occur. The Inspector and Resident Engineer must carefully examine the concrete after the forms are removed for any visible layering or discoloring. If you suspect a cold joint does exist say so and reject the structure. The Contractor is then obligated to submit a proposal.

At this point the Contractor has several options:

1. Core the structure at the cold joint and strength test the cores to see if they will fail at the cold joint.

2. Submit an engineering analysis proving the cold joint is not detrimental to the structure.

3. Repair the cold joint.

4. Remove concrete beyond the cold joint to a place in the structure where a construction joint would be acceptable.

All of these alternatives can be time consuming and costly. Thus it is very important to work with the Contractor to minimize the risks of forming cold joints. It is advisable for the Inspector not to stop a concrete pour when you suspect a cold joint may be forming. Let the Contractor and the Resident Engineer make this call. Usually the burden is placed entirely on the Contractor and the Resident Engineer will only interfere when the cold joint and its detriment to the structure are obvious.

Steel Reinforcement Placement

Section 605 is devoted entirely to the requirements of steel reinforcement. It covers material requirements, splicing methods, placement tolerances, and bending requirements. The following is a brief discussion on how reinforcing steel or "rebar", as it is commonly called, affects concrete placement.

Reinforced concrete is a composite material consisting of steel and concrete. Composite materials work best when the reinforcement (the steel) is in continuous contact with the matrix (the concrete) and both are combined in the right proportions. Since the reinforcement and the matrix carry the loads, continuous contact between the two will provide a uniform transfer of the stresses. When there are voids near the reinforcement due to poor concrete placement or consolidation, higher stresses develop in the concrete than would normally be expected. These stresses lead to poor load transfer to the steel and allows premature cracking and water to enter into the void around the steel causing corrosion. Thus it is important for the Inspector to verify that there is good consolidation of the concrete around all reinforcing steel. The intent is to have no air voids around any reinforcing steel. Adequate concrete cover over the reinforcing steel near any surface is needed to prevent steel corrosion. The Project Plans will specify the amount of cover required, which is usually a minimum. Inspectors should be vigilant about ensuring adequate cover over all reinforcing steel.

Concrete itself is a composite material. The fine and coarse aggregates act as the reinforcement while the cement, water, and admixtures act as the matrix. Concrete behaves best when the matrix and reinforcement are in continuous contact with each other and are mixed in the right proportions. Steel reinforcement can interrupt this continuity when the bars are placed too close together. If there is not sufficient room for the coarse aggregate to help fill the space between the bars, there is no longer reinforced concrete, but reinforced mortar. Mortar is more prone to shrinkage and cracking than concrete.

To avoid this situation, Subsection 1006-3.01 limits the maximum size aggregate to the least of:

- 2/3 of the clear spacing between reinforcing steel bars or bar bundles;
- 1/5 of the narrowest form dimension; or
- 1/3 the depth of the slab.

For example: if 5/8 inch coarse aggregate is used:

- the minimum clear spacing between bars would be 5/8 ÷ 2/3 = 15/16 ~1 inch;
- the narrowest form dimension would be 5/8 ÷ 1/5 = 25/8 = 3 1/8 inches and;
- the minimum slab depth would be 5/8 ÷ 1/3 = 15/8 ~2 inches.

Inspectors need to know the size of the coarse aggregate used so they can check for adequate rebar spacing and form size. It is not uncommon in areas where bars are lap spliced to find a spacing problem. Pier caps often have rebar spacing problems especially where the vertical pier steel penetrates into the cap beam.

Rebar spacing and cover problems should be brought to the attention of the Contractor and Designer. Both have the responsibility to ensure that the Standard Specifications are followed.

(B) Bridge Deck

The Resident Engineer must hold a pre-pour meeting with the Contractor before any series of bridge deck pours. The intent is to have the Contractor's concrete foreperson describe how the deck concrete will be placed, consolidated, finished, textured, and cured. As a minimum, the following discussion should be covered:

1. the Contractor's pour sequence plan which shall include the location of all construction joints by span and station, the width and quantity of concrete to be placed, the scheduled time for each placement, the direction of placement and orientation of the screed, the proposed screed, and the means of setting and controlling screed grades;
2. the equipment to be used for vibrating, finishing, floating, tining, misting, and curing;
3. type of materials used for curing;
4. crew experience and assignments;
5. inspection staffing, procedures and timing;
6. rebar placement and scheduling;
7. material sampling, testing, and certification (concrete, rebar, curing compound, precast mortar blocks, etc.);
8. plant operations, inspections and concrete deliveries;
9. on-site and off-site traffic control (traffic under the deck pour should be avoided);
10. safety hazards and protective equipment;
11. ladders and walkways for personnel access;
12. contingencies for plant failures, pump breakdown, screed stoppages and inclement weather (rain, snow, dry winds, falling temperatures); and
13. illumination requirements if at night.

These thirteen points should be used as a basis for developing an agenda for the pre-pour meeting.

Bridge deck pours are difficult and expensive to stop once they get started. The idea behind the pre-pour meeting is to ensure both the Contractor's and the Department's field personnel have a clear understanding of how the deck will be poured and what inspection procedures will be followed. The time to have discussions about good construction practices and specification enforcement is in a meeting room, not on top of the bridge. Thus it is important for everyone on the Contractor's and ADOT's team to clearly understand all the details of the pour. The Project Supervisors and Inspectors should be free to ask questions so they can fully understand the Contractor's methods. The Resident Engineer should ferret out any hidden agendas on both sides, ask the tough questions nobody wants to ask, and get a commitment from the Contractors staff to do what they say they are going to do

Pour Sequence

Bridge superstructures, particularly bridge decks, follow a pour sequence where some portions of the deck or superstructure are poured before others. The pour sequence can be found in the Project Plans. The Project Supervisor must ensure the Contractor strictly follows the pour sequence.

The pour sequence is intended to place much of the concrete for the superstructure in the midspan areas before placing concrete over the piers. The placement sequence allows the reinforcing steel over the piers to move as the bridge deflects from the weight of the concrete. If the concrete over the piers were poured first, the rebar would be locked into place as soon as the concrete hardens. When the midspan areas are poured, the concrete over the piers could crack as the concrete tries to restrain the rebar from moving.

Occasionally the Contractor would like to alter the pour sequence by using retarders in the concrete. This should be done by a written proposal and a minor alteration. The use of retarders requires the approval of the Bridge Designer, ADOT Bridge Group, and Materials Group.

Generally bridges built on soffit fill do not have to follow a pour sequence unless required by the Project Plans.

(C) Pumping Concrete

When concrete is pumped, the Contractor must have a standby pump in case the primary pump fails. It is not necessary for the standby pump to be at the job site as long as it can be mobilized and placed in operation within 30 minutes of a pump failure.

It is considered good practice on monolithic pours to allow a waiting period from two hours (minimum) to four hours (maximum) following concrete placement in walls, columns, or piers before permitting fresh concrete to be placed on top of these members. This delay can be modified where wall height is 6 feet (2 meters) or less. The delay is necessary to allow most of the settlement and shrinkage in the earlier placements to occur; thus, decreasing the probability of cracking at the junction of the two placements.

In some cases, the Project Plans will indicate the sequence of placing concrete in a structure. When not shown on the Project Plans, the Resident Engineer should require the concrete to be placed continuously throughout each section of the structure or between indicated joints. The concrete placement rate should be such that no cold joints are formed within monolithic sections

(D) Vibrating Concrete

The Standard Specifications require all concrete in structures to be vibrated. The purpose is to cause the concrete mix to envelop and bond to the reinforcement, fill voids, and make the structure more waterproof and durable. The concrete vibrator, when properly used, is a good tool for working the concrete under and around closely spaced reinforcement.

Operation of the vibrator requires some skill and considerable physical effort. Workers who are charged with this responsibility should have some experience and instruction in proper methods of vibrating. The vibrator should not be left in any one area of concrete longer than a few seconds. As soon as the surface of the concrete surrounding the vibrator ceases to settle, it should be pulled out slowly and inserted slowly into a new area in accordance with the pattern indicated in the Standard Specifications. Excessive vibration should be avoided as it tends to cause segregation and increases the lateral pressure on the forms.

Subsection 601-3.03(D) allows the Contractor to use only approved vibrators for consolidating structural concrete. It is up to the Inspector or Project Supervisor to approve or disapprove vibrators. Inspection of vibrators and other placing and finishing equipment should be done at least one day before the pour so the Contractor can replace any substandard equipment.

The minimum vibration frequency is 8,000 cycles per minute (130 Hz) in fresh concrete. If the Inspector suspects the vibrator is not operating at or above the minimum frequency, measure the vibrator's frequency with a portable tachometer or a vibrating reed called a Vibra-Tak. ADOT's regional or central lab should have these instruments. The frequency should be measured with the vibrator operating in and out of the concrete. A significant difference between the vibrator's measured frequencies in and out of concrete may indicate that the vibrator is in need of repair or there is an inadequate power or air supply.

Contractors should operate vibrators in accordance with the manufacturer's recommendations. If the Inspector suspects that the Contractor is not using a vibrator properly, the vibrator can be rejected for not being the suitable to the Contractors placement methods. Consult the manufacturer's recommendations to make this determination.

The depositing of concrete at one point and moving it with the vibrator is not permitted. Concrete should be placed in approximately horizontal layers not more than 24 inches (600 mm) deep. If concrete flow movement is unavoidable, it should be done with shovels rather than vibration. Moving concrete horizontally causes the grout to flow while the rocks settle.

Bridge screeds should be equipped with vibrators. Bidwells and other commercially available screeds can be equipped with external vibrators mounted in front of the rollers. These vibrators must clear the top mat of reinforcing steel and are used to ensure that the riding surface of the deck is properly consolidated for long-term wear.

601-3.04 Joints in Major Structures

(A) Construction Joints

There are basically only two types of joints in any reinforced concrete structure: the construction joint and the expansion joint.

The construction joint is a provisional joint used primarily to terminate a concrete pour at a predetermined location. Some structures are so large that it is not possible or desirable to pour them all at once. The construction joint is intended to provide a temporary means of ending a concrete pour while still providing structural continuity (that is adequate load transfer across the joint). The installation of construction joints is generally straightforward. A form serves as a bulkhead where the pour is terminated. Usually rebar will protrude through the form and a key is usually formed on the joint face (see Project Plans). The form is stripped the next day except when a stay-in-place form is used. The joint is then cleaned with either sand or water blasting (if more than eight hours old) and the next pour is continued.

Inspectors need to carefully examine construction joints in structures for:

- the correct location and orientation;
- correct concrete placement procedures (ensure only the best concrete is used and that it is properly placed and consolidated—don't use the first concrete out of the chute or pump line);
- proper cleaning and blasting (don't over blast the joint since this will only loosen the coarse aggregate); and
- smoothness across the joint when placed in a bridge deck or other riding surface (this will require a large amount of straight edging and careful screeding and re-screeding by the Contractor).

Expansion Joints

The expansion joint is intended to allow movement between adjacent structures or between different members within a structure. This movement prevents stress build-up due to creep, shrinkage, or temperature changes that would seriously crack the structure.

Expansion joints create a small gap between two structures or structural members (abutment vs. girders) that allow for movement. There are three important things that the Inspector must keep in mind about expansion joints:

1. The joint is in the correct location and runs the full depth and length required by the Project Plans (the joint must completely separate the two structures or structural elements).

2. The gap is set at the correct width.

3. There are no obstructions or connections between the two structures (rebar, conduit, utility lines or loose concrete) that would interfere with the opening and closing of the joint. Only approved fillers and sealant materials should used.

Expansion joints are shown on the Project Plans. Expansion joints can be found between abutments and bridge superstructures; between two sections of a long bridge superstructure; between anchor and approach slabs; and between approach slabs and abutments.

Near the surface of an expansion joint, a compressible material (such as a bituminous or cellular plastic filler) is placed to prevent rocks, nails, and other incompressible material from entering the joint that would prevent movement. On top of the filler, a joint sealant is placed to prevent water from entering the joint. For expansion joints adjacent to bridge decks, a deck joint assembly is installed and serves as the joint filler and sealant.

Joint Location and Weakened Plane Joints

The Project Plans will show the location of all joints. Construction joints are usually oriented and located in areas where load transfer is uniform or at a minimum. With the Designer's approval, the Contractor may add, alter, or relocate construction joints. Subsection 1.8.5 of the *Bridge Design and Detailing Manual* includes guidelines acceptable to ADOT for locating construction joints.

The weakened plane joint (where the concrete is partially sawn to control cracking) is rarely used in reinforced concrete structures. Reinforcement steel acts like a crack stopper so there is no guarantee that the concrete will crack at the weakened plane joint. Expansion joints are used to control cracking.

(B) Deck Joint Assemblies

ADOT most widely uses two types of deck joint assemblies. The compression seal joint (which is shown in Structure Detail Drawing SD-3.01) and the strip seal joint (Structure Detail Drawing SD 3.02 shown in Exhibit 601-3.04-1). Both are designed to keep out water and prevent debris from falling into the joint.

The Contractor must submit shop drawings for all deck joint assemblies in accordance with Subsection 601-3.04(B)(3)(b). The Bridge Designer will review and approve the shop drawings.

The Inspector must have these shop drawings on hand when the Contractor installs the deck joint assemblies. The shop drawings will describe the method of installation. The Inspector should ensure this method is followed. In addition, a temperature correction chart should be included with the drawings. It is very important for the Inspector to ensure that the correct gap width for the joint is set prior to pouring the joint. The width is based on the structure temperature (not air temperature) at the time of the pour, which can be read from the chart. Setting the joint at the incorrect gap can create long-term maintenance problems for the Department. A gap that is set too wide can cause the joint material to tear or fall out as the joint expands. A gap that is set too narrow can cause the joint to close, which can severely crack the bridge deck, girders, and diaphragms.

However, unless a more precise method of measuring the temperature of the main superstructure members is used, the setting temperature of the bridge shall be taken as the mean shade air temperature under the structure. This temperature shall be the average over the 24-hour period immediately preceding the setting event for steel bridges and over 48 hours for concrete bridges.

Here are some other inspection checks the Inspector can do to ensure the Department gets long-lasting, worry-free deck joints:

- A long-lasting joint is a smooth joint—ensure the steel guard angles on each side of the joint are correctly recessed so that no bump or dip will occur as vehicles pass over the joint (concrete grinding should be done to improve the smoothness).
- Sample the seal material and have it tested.
- Ensure the existing concrete adjacent to the joint is coated only with an approved adhesive.
- Ensure the Contractor achieves good consolidation of the concrete under the guard angles.
- Ensure bolts in the erection angle are loosened after the concrete has set to allow movement.
- Enforce all the provisions of Subsection 601-3.04. They were written to provide the Department with durable, high quality deck joints.

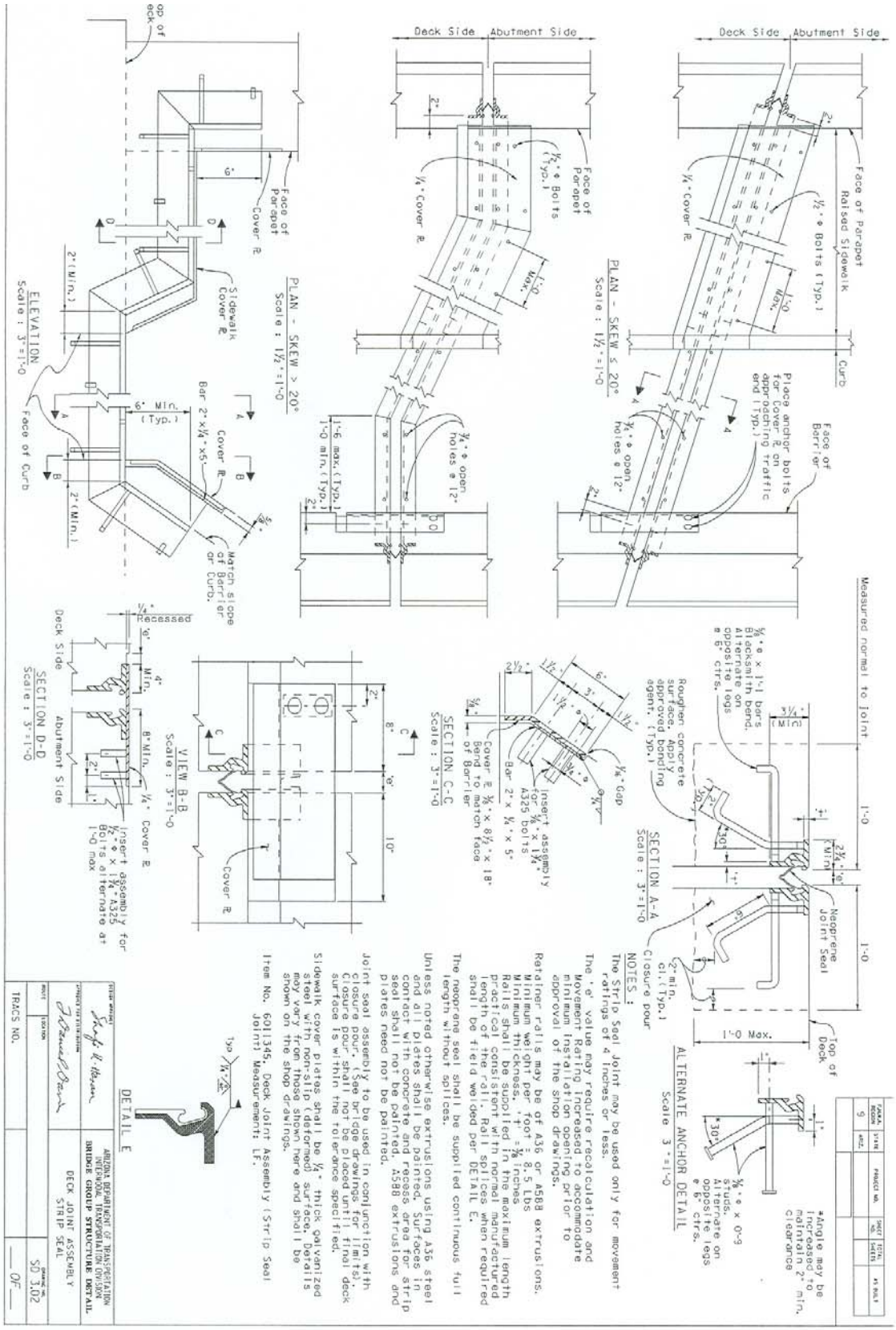

Exhibit 601-3.04-1 Strip Seal Joint Detail

601-3.05 Finishing Concrete

All formed surfaces require a Class I finish, as a minimum. The intent is to provide a concrete surface that is hard, sound, and reasonably impenetrable to moisture. No steel is allowed within 1 inch (25 mm) of the surface. This is to prevent the establishment of a rust channel that could corrode the reinforcement. A Class I finish is just as important below ground as it is above. In fact, the potential for rebar corrosion is much higher underground.

When formed surfaces will remain in view of the traveling public, the Contractor must use forms that will provide a "pleasing appearance of uniform color and texture." This appearance can be somewhat subjective so the Department has published a *Concrete Finish Reference Manual* for the Inspector and Contractor to use as a guide.

A Class II finish is required when the Contractor's forming system does not produce the "pleasing appearance of uniform color and texture" required by the Standard Specifications. The intent of Subsection 601-3.05 is for the Contractor to produce the proper finish without having to resort to performing a Class II finish. In other words, the Contractor cannot use damaged forms or substandard forms and perform a Class II finish after stripping. The Class II finish procedure is merely in the Standard Specifications as a contingency for the unexpected occasion where the formed finish is not pleasing in appearance. It is not a replacement for good concrete forming practices.

If a formed surface does require finishing, Subsection 601-3.05(A) specifies the finishing to begin *immediately* upon removal of the forms. Immediately does not mean tomorrow or next week. Contractors are often anxious to get their forms down as quickly as possible, but may not want to provide the labor necessary to finish and cure the exposed surfaces immediately after removal.

Resident Engineers have required the Contractor to leave forms in place until a satisfactory crew could be assembled to finish and cure the exposed concrete. Mortar adheres to young concrete much better than to older concrete and it is easier to obtain a more uniform color and texture. In the long term, the surface will be more durable and uniform in color and texture if the concrete is finished when it is still relatively young.

(D) Finishing Bridge Deck

One area of bridge deck finishing that Inspectors and Contractors should always pay close attention to is the deck smoothness at the joints. On precast girder bridges, this is especially important since many construction joints are needed to comply with the required pour sequence (see Subsection 601-3.03 of this manual for further information). Any irregularities disclosed by the straight edging should be corrected immediately. Attention should be given to finishing the gutter lines on bridges particularly on nearly flat grades in order to preserve good longitudinal drainage.

The Inspector should allow the Contractor to make minor adjustments to the screed grades to obtain the smoothest joint possible while maintaining a deck thickness within allowable tolerances. In some cases, the Contractor may need to back up the screed and re-screed the surface to get the required smoothness. A small uniform roll of concrete should be maintained ahead of the screed. This requires constant attention when the screed is in operation. The smoothness of the deck will be governed to a great extent on how smoothly the screed operates.

For bridges longer than 300 feet (100 meters), using the profilograph might be warranted to locate areas on the surface that are suspected of being too rough. Using the profilograph should be supplemented with the use of a

conventional straightedge when any suspected areas are located. The profilograph has two advantages over the straightedge. First it records on paper a scaled profile of the surface. Second this profile can be converted into a Profile Index of inches per mile of roughness. This index figure can then be compared with indices of other bridges and pavements. However the Profile Index is not a requirement bridge decks must meet; only the straight edge requirements apply.

Experience is important in the evaluation of straightedge and profile data. Occasionally high spots are really on grade, but the low areas make the high spots look high. When this condition exists, cutting the area to meet tolerances over the low spots may result in removing too much of the surface and reducing the reinforcing clearance.

Subsection 601-3.03 of this manual describes special finishing and texturing requirements for skewed bridges.

As one last reminder, Inspectors should spot check the deck thickness behind the screed. Inserting a piece of thick steel wire or rebar into the fresh concrete can do this. The measurement will ensure that the Department is obtaining the correct deck thickness and can alert everyone to potential problems that can be corrected while the concrete is still being placed.

601-3.06 Curing Concrete

Section 1006-6.01 specifies how all cast-in-place concrete shall be cured. Curing should not be delayed more than one hour after surface texturing or form removal. Any remedial finishing operation should be finished as soon as possible and should not interrupt curing for more than one hour. The bottom line is, Contractors need to have sufficient labor available to begin Class I or II finishing and apply curing as soon as the forms are removed—not three hours or three days later.

There are three methods that are acceptable to the Department:

1. the water curing method;

2. the curing compound method; and

3. the forms-in-place method.

The type of curing method that is used depends on the type of concrete surface:

- For formed surfaces, the Contractor has the option of using either water curing, curing compound, or leaving the forms in place.
- For unformed surfaces (such as top of walls, concrete pavements, etc.), the Contractor has the option of using either water curing or curing compound.
- For bridge decks, the Contractor must use both water curing and curing compound.

Water Curing Method

The curing process is as follows:

1. Apply water to the concrete surface with a water atomizer immediately behind the finishing or texturing operation (see Subsection 1006-6.01[A], first paragraph).

2. Continue to apply water with an atomizer until the concrete has set or a curing medium has been applied then either:

    A. apply a curing medium—burlap, Burlene, rugs, carpets, or earth blankets and keep them continuously moist, or
    B. continuously spray with water,

3. Continue 2a or 2b for seven days.

Curing Compound Method

The materials in many curing compounds separate, requiring the curing compound to be mixed or agitated before use. The Standard Specifications do not require agitation specifically, but the Resident Engineer may require this to maintain the integrity of the curing compound. Inspectors should verify that the curing compound has been agitated properly. Propellers and air agitation have been used. Rolling a barrel on the ground is not acceptable. Thorough mixing should be done at least once daily when curing compound is being used.

When curing compound is to be applied to an exposed horizontal surface, it should be applied just after any bleed water or other standing water has left the surface. On formed surfaces that require a Class I finish, the curing compound should be applied as soon as possible after removal of the forms. The application should only be delayed long enough to permit any needed repair work. On surfaces that require a Class II finish, it is somewhat of a problem to perform good finishing and the curing simultaneously. Both are important and both need to be performed early.

Forms in Place Method

For this method the Contractor merely leaves the forms on for seven days (see Subsection 1006-6.01[D]).

Curing Bridge Deck

Curing bridge decks requires a combination of wet curing and the application of curing compound. This curing process is more intricate than curing other concrete members.

The generally accepted procedure is to:

1. finish and texture the bridge deck;
2. immediately spray with curing compound;
3. continuously apply atomized water until curing medium is applied;
4. apply the curing medium within 4 hours of the finishing operation—usually wet burlap or Burlene; and
5. continuing wet curing for seven days.

In the past, the Department has allowed step number 3 to be an option for the Inspector. The decision to waive this step should be based on weather conditions (including wind speed, relative humidity, temperature and cloud conditions). On very hot and dry days, Contractors have been required to begin atomizing before the texture or curing compound can be applied (Subsection 601-3.05[D]).

601-3.07 Supporting, Handling, and Transporting Precast Concrete Items

Minor precast structures are defined as precast items such as cattle guards, catch basins, manholes, median barriers, and other small miscellaneous structures. The great majority of minor precast structures are fabricated in Phoenix. Only the fabricators shown in the Special Provisions are approved to supply minor precast structures to ADOT projects.

It is the responsibility of ADOT Materials Group to inspect the fabrication of precast concrete structures and accept or reject the finished product. Precast units are accepted if strength tests indicate at least the required 28 day compressive strength. The compressive strength is determined by use of a rebound hammer and a calibration curve. The curve is established from rebound readings taken on concrete test cylinders fabricated at the precast plant and from the actual compressive strength of the cylinders.

When the Central Laboratory accepts precast units, each unit is stamped to show acceptance. The stamp consists of the letters "ADOT" on the unit by use of a stencil and black ink. The letters are approximately 2 inches (50 mm) high.

When precast units arrive on the project, they shall be accompanied by a Certificate of Compliance and shall include a copy of the approved mix design. The Contractor shall certify that sufficient concrete testing has been performed to ensure compliance with the slump and air entraining requirements. If the precast units have been damaged during shipping or there is any reason to question the workmanship, it is the responsibility of the Project Supervisor or Inspectors to reject the units or have them repaired satisfactorily.

Installation of precast items should be done in accordance with the manufacturer's recommendations and any installation notes specified in the Project Plans or Special Provisions. Careful assembly is required when gaskets and joint materials are used to obtain a watertight seal between each precast member.

601-3.08 Backfilling

Refer to Subsection 203-5.03(B) of this manual and Standard Drawings B-19.40 and 19.50 for additional information on structure backfilling.

Often the Contractor will ask to be allowed to use native material as structure backfill. This is acceptable as long as the material meets all the requirements of Subsection 203-5.03(B)(1). Sometimes the Contractor will question why certain structures (such as shallow pier footings or catch basins) require structure backfill at all. The Department has several good reasons, which are listed below, why structure backfill should be used to backfill all structures:

1. Structure backfill is a material of known properties and predictable behavior, on which the Designer can rely, that will not adversely affect their structure.

2. Structure backfill does not contain large rocks or boulders that could damage the structure during backfilling.

3. Structure backfill is permeable and does not allow excessive, long-term hydrostatic pressures to build around the structure.

4. Structure backfill has pH and resistivity requirements designed to inhibit the corrosion of reinforcing steel in the structure.

5. Structure backfill can be compacted to a more uniform density than most other native materials; thus, exerts a more uniform lateral load on the structure.

601-3.09 Vertical Restrainers

Vertical restrainers are 4-foot (1.2-meter) steel cables formed in the shape of a loop. Half of the cable is cast into an abutment or pier while the other half is cast into the diaphragm between the girders. These cables link the bridge superstructure to the substructure. The motions of an earthquake can cause the bridge superstructure to rise off the substructure. If the superstructure rises too high, it can come crashing down on the substructure. The cables are intended to limit the amount the superstructure can raise off the substructure. When vertical restrainers are used, the cables must allow the bridge superstructure to move freely (horizontally at the expansion joints). They must also allow the superstructure to rotate at piers and abutments since the cables are set in place before all loads are placed on the bridge. There are two types of vertical restrainers: 1) one for use at expansion joints and 2) one for use at piers and abutments where expansion capability is not required. Exhibits 601-3.09-1 and 601-3.09-2 show the two types.

EXPANSION RESTRAINER

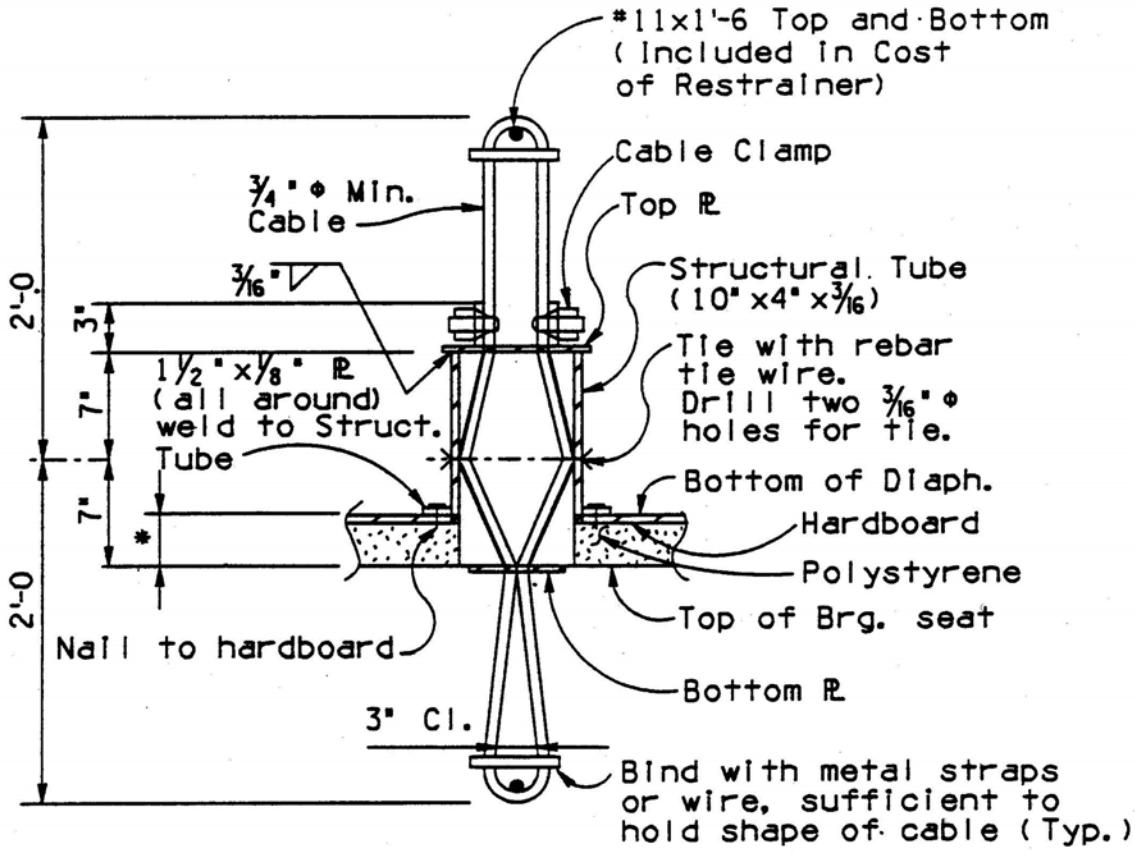

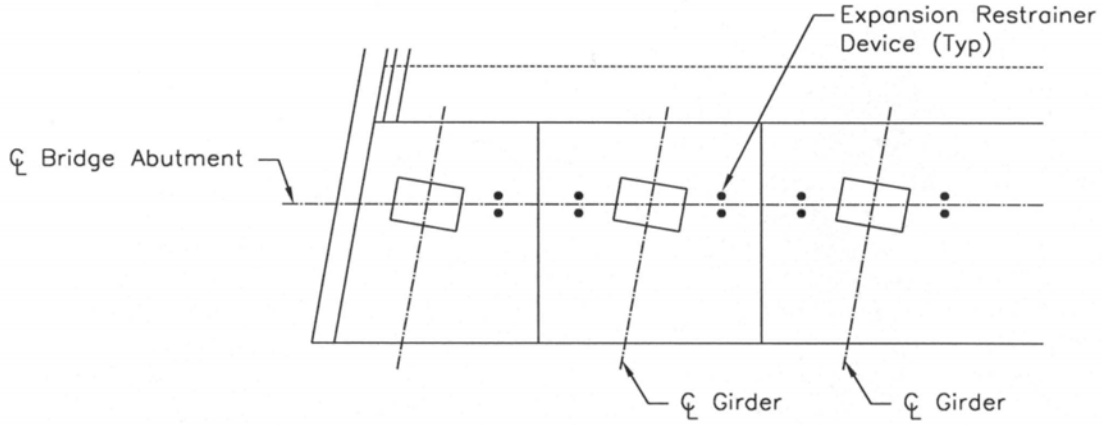

Exhibit 601-3.09-1 Expansion Vertical Restrainers

FIXED RESTRAINER

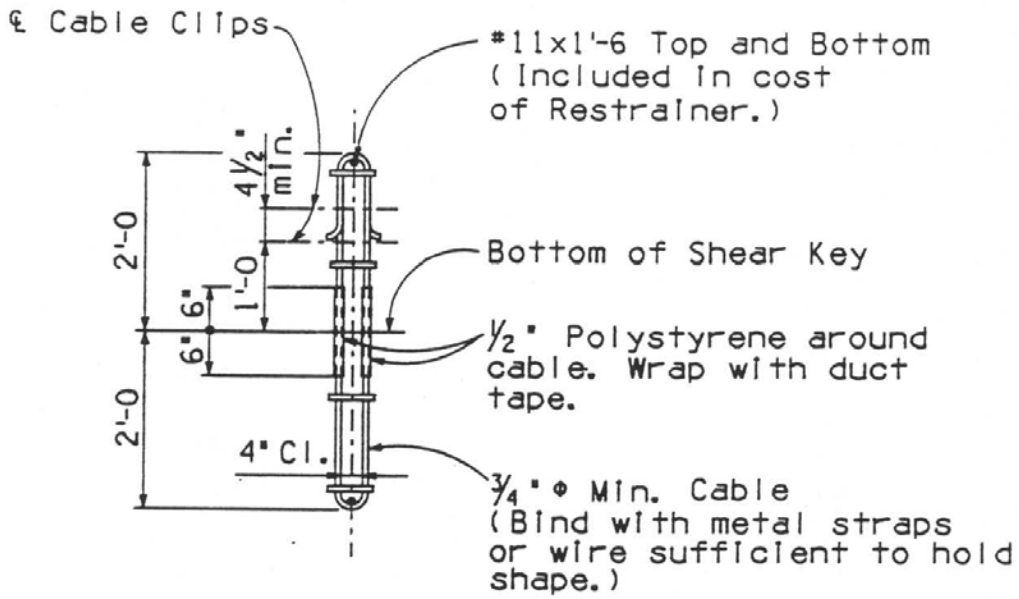

FIXED RESTRAINER DETAIL

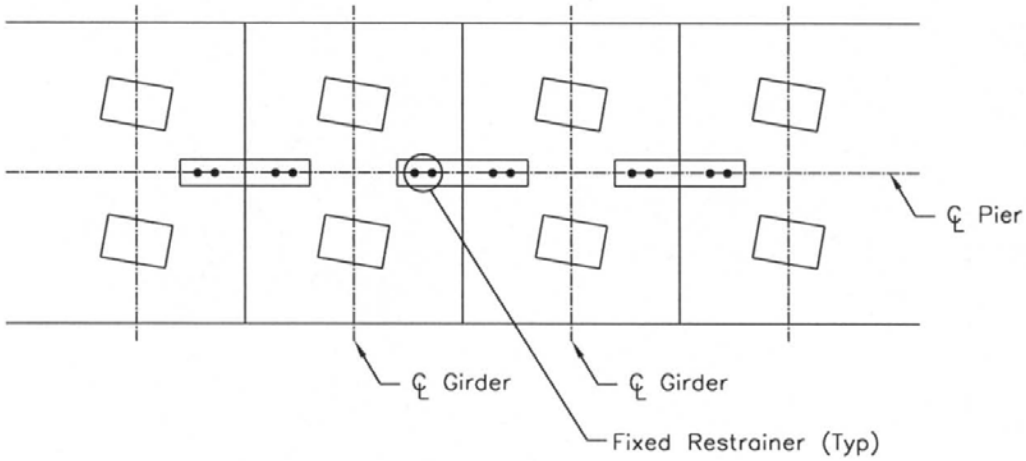

Exhibit 601-3.09-2 Fixed Vertical Restrainers

Orientation of the vertical restrainers is crucial to the long-term performance of the bridge. Fixed restrainers are installed with a different orientation than expansion retainers. It is important to review the Project Plans and verify the correct orientation of each restrainer.

Fixed restrainer cables have the face of the loop parallel to the abutment or pier centerline and perpendicular to the girder as shown in Exhibit 601-3.09-2. This allows the cable to bend or fold over as both the girders and diaphragms rotate due to loading of the superstructure. If the cables were turned ninety degrees they could inhibit the rotation of the diaphragm that might result in undesirable cracking of the diaphragm.

Expansion restrainer cables, on the other hand, have the face of the loop perpendicular to the abutment or pier centerline and parallel to the girder as shown in Exhibit 601-3.09-1. This is due to the fact that part of the loop is contained inside a hollow steel box. This steel box is cast into the superstructure and performs several important functions. First it spreads the cable loop apart. This is done to allow some vertical movement so that the superstructure can be jacked up slightly from the substructure in order to replace any worn bearing pads. Secondly it provides room for the superstructure to move (expand and contract) while allowing the cable to freely bend and stretch as the structure moves. The correct alignment of the box is of critical importance. The box prevents the portion of the cable embedded in the substructure from snagging against the sides of the box as the superstructure moves on the bearing pads. The Designer will specify how wide each box will be based on the amount of expansion and contraction they expect at the joint.

Inspectors are required to sample vertical restrainers and have them tested for breaking strength and compliance with other material specifications. The polystyrene and hardboard used to separate portions of the restrainers from the surrounding concrete have material specifications that the Inspector should enforce.

Superstructure-Substructure Connections

The *superstructure* of a bridge consists of the girders, diaphragms, deck, and barrier. The *substructure* of a bridge consists of the abutments and piers and their foundations. The superstructure carries all loads (weight of traffic, force of the wind, weight of the superstructure itself) between each portion of the substructure (the piers and abutments) and transmits the loads to the substructure. The substructure, in turn, transmits the loads from the superstructure to the ground.

The best way to visualize the difference between superstructure and substructure is to think of the piers and abutments and everything below them as substructure. Everything above the piers and abutments is superstructure. From a load carrying point of view, the superstructure transmits loads horizontally (or diagonally, in the case of an arch) to the substructure and the substructure transmits the loads vertically to the ground.

It is very important for both the Inspector and the Resident Engineer to understand how the superstructure is designed to behave when it comes in contact with the substructure. There are three fundamental ways of connecting the superstructure to the substructure. Although in practice these connections are complicated to build. Understanding how they are supposed to behave, ideally, will help in finding construction errors that could seriously affect the performance of the bridge.

The bridge elevation sheet will show an “E,” “F,” or “P” where the girders of each span come in contact with either a pier or an abutment.

An “E” on the bridge elevation sheet indicates the superstructure is allowed to expand over the substructure. Bearing pads are placed between the girders and girder seats on the substructure to allow independent movement and rotation of the superstructure. Usually an expansion joint is also placed in this location that forms

a physical gap in the superstructure. The important thing to remember is that the superstructure is not physically tied to the substructure. There should be no rebar connecting the girder diaphragm into the pier or abutment. Expansion restrainer cables and perhaps a shear key should be the only things restraining movement of the superstructure. If there is an expansion joint in the superstructure, there should be no rebar or conduit that ties the two portions of the superstructure together. There should be a continuous gap all the way around the diaphragm so the girders can move freely on the bearing pads.

An "F" on the bridge elevation sheet indicates the superstructure is physically tied to the substructure. The superstructure can't move or rotate without the substructure moving or rotating with it. Rebar from the pier or abutment protrudes into the girder diagram forming a rigid connection between the two structures. Bearing pads are used to distribute the loads evenly across the girder seats rather than allow any differential movement. Fixed restrainer cables and shear keys may be used to help resist seismic loads induced from earthquakes. The Resident Engineer and Inspector should verify how the substructure steel is tied to the superstructure steel. Accurate rebar placement and good splicing and tying practices are important so that a highly rigid attachment of the superstructure to the substructure will result.

A "P" on the bridge elevation sheet means the superstructure is attached to the substructure but is allowed to rotate independently like a "pinned" connection. Some rebar will protrude from the substructure to prevent horizontal movement. Fix cable restrainers are used to prevent excessive vertical movement. Bearing pads are used to allow rotation. The Resident Engineer and Inspector should focus their attention on the bearing pads since defective or the wrong bearing pads could inhibit rotation. Rebar placement and positioning of the restrainer cables are other important inspection areas.

Bearing Pads

Very little is said about bearing pads in Section 600 of the Standard Specifications. Section 1013 discusses the material requirements. The Project Plans and Special Provisions specify the installation requirements. The Special Provisions may talk about material requirements for bearing pads not covered by Section 1013.

Bearing pads are typically made of Neoprene or natural rubber. The shape and design of the bearing pad depend on the type of movement allowed. Plain bearing pads are essentially rubber blocks or strips placed under the ends of each girder. They allow the girder ends to rotate. When some horizontal movement is needed, laminated bearing pads are used. The more movement needed, the thicker the pad needs to be in order to flex. When a lot of horizontal movement is needed, a Teflon plate or a greased galvanized steel plate is placed on top of the bearing pad. Exhibits 601-3.09-3, 601-3.09-4, and 601-3.09-5 show typical bearing pad details.

Plain Bearing

Plain bearings may be molded, cut, or extruded to any size and thickness. Plain bearings may also be vulcanize-bonded to top and/or bottom load plates.

Plain bearings may also have holes, slots, skewed ends, clipped corners, and/or circular in shape.

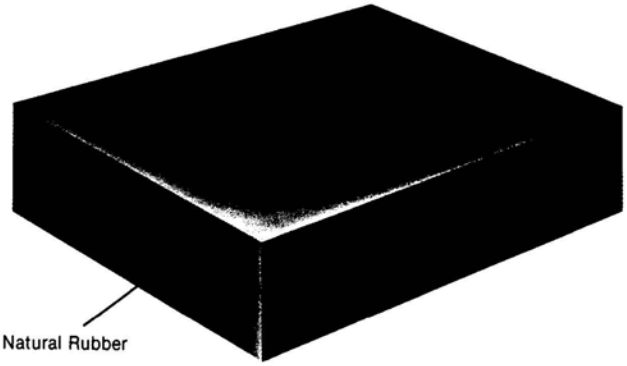

Laminated Bearing

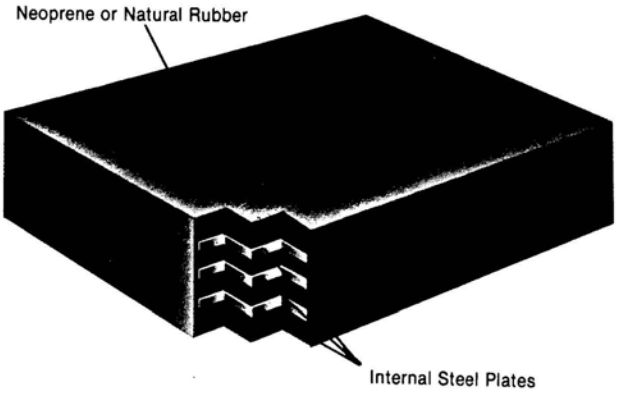

Laminated bearings may be molded to any shape or size, depending on the design requirements. Internal steel plates may vary in thickness and are vulcanize-bonded during the molding process.

Laminated bearings may also be manufactured with top and/or bottom load plates vulcanize-bonded during the molding process. Cover layer thicknesses may be varied according to specific requirements on the top or bottom of a bearing, or on the edges, for environmental resistance.

Sliding Bearing

A sliding bearing consists of two components. The top component incorporates a steel load plate with a polished stainless steel plate welded to it. The top plate is welded or bolted to the girder during installation.

The bottom component consists of a 1/16″-3/32″ TEFLON® sheet bonded to a stainless steel backing plate, bonded to an elastomeric bearing, bonded to a steel load plate. All bonding is done by vulcanization during the molding process.

Sliding bearings may be guided or free to move and are custom made to individual project requirements for material types, expansion, rotation, etc.

Also available are preformed fabric sliding bearings. All miscellaneous elements, including lead plates, anchor bolts, and side retainers, are available as required.

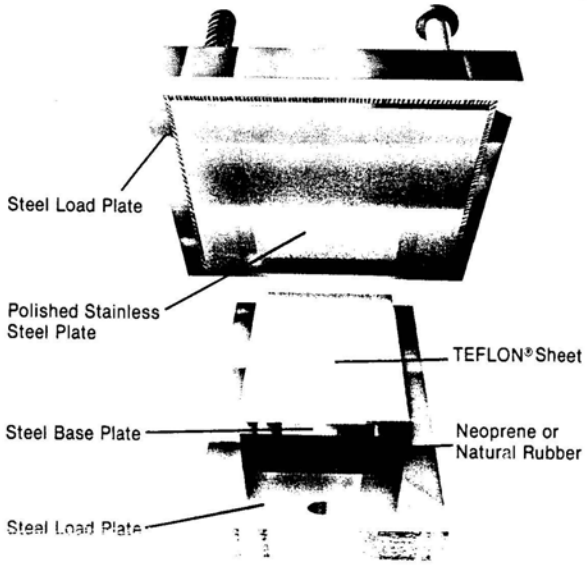

Exhibit 601-3.09-3 Bearing Pads

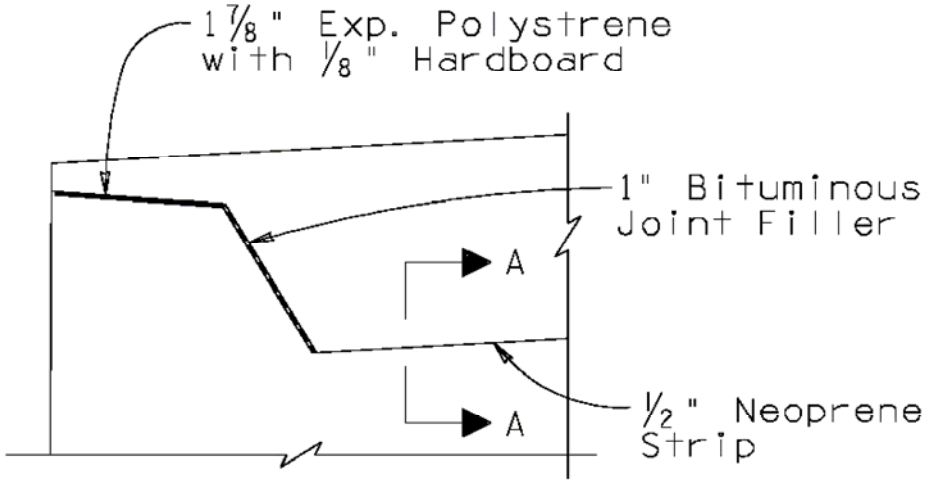

PARTIAL ELEVATION

No Scale

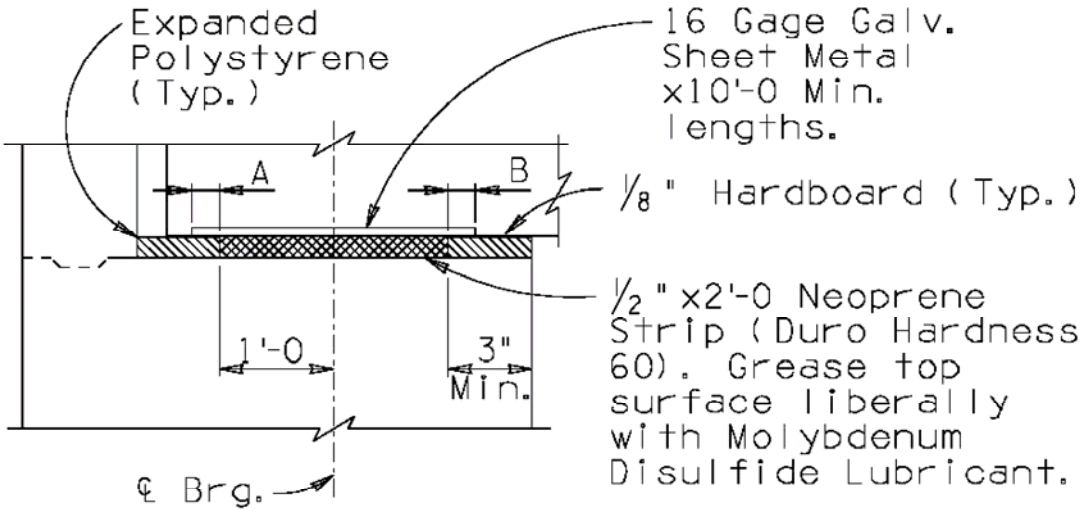

SECTION A-A

No Scale

A = Movement due to temperature fall + rise + prestress shortening (elastic + long term) + 1" Min.

B = Movement due to temperature rise + fall + + 1/2" Min.

Exhibit 601-3.09-4 Neoprene Strip Details

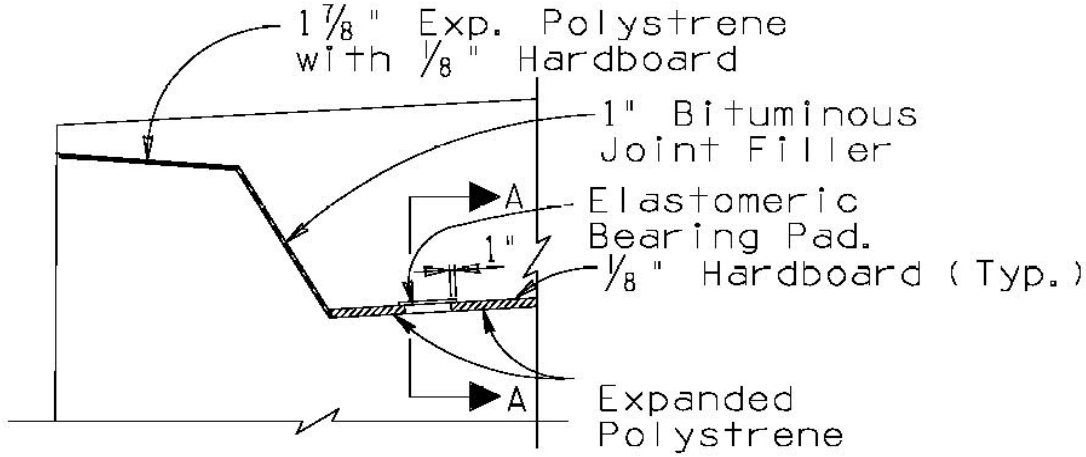

PARTIAL ELEVATION

No Scale

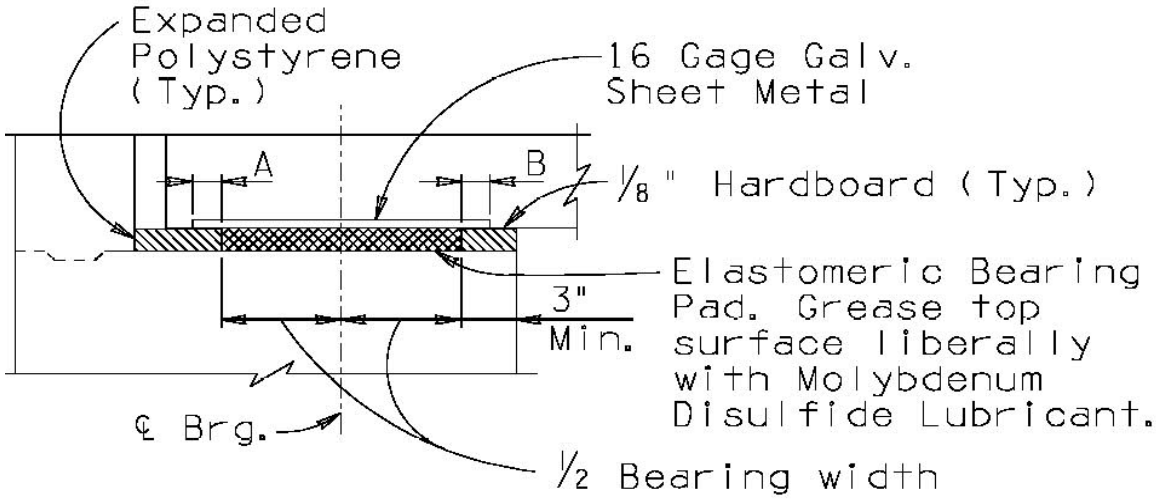

SECTION A-A

No Scale

A = Movement due to temperature fall + prestress shortening (elastic + long term) + 1" Min.

B = Movement due to temperature rise + 1/2" Min.

Exhibit 601-3.09-5 Elastomeric Bearing Pad Details

Bearing pads can only carry so much load before they loose the ability to flex. When a bearing pad is required to carry heavy loads, the Designer may specify pot, disc, or spherical type bearings. These are sophisticated types of bearings that must be pre-approved and tested prior to installation.

The wide variations in bearing designs do not permit a more detailed discussion on bearing types and installation requirements. However the Inspector should follow these general rules when inspecting all types of bearing pads:

1. Consult the Project Plans and Special Provisions first.

   Most of the installation and material requirements will probably be found in these two documents. You should clearly understand how the bearings will be placed on the pier or abutment and how they will be connected to the bridge girders.

2. Bearing pads must be made of material acceptable to the Department.

   The Special Provisions or Section 1013 specifies the material properties for bearing pads. Bearing pads have strict material requirements that must be adhered to in order to achieve a long lasting, low maintenance service life. Bearing pads are sampled by the Inspector in accordance with the Sampling Guide and sent to ADOT Materials Group for testing.

3. Bearing pads need to be level.

   Bearing pads are intended to be a plane level surface that the girders and bridge superstructure can slide upon. Unlevel bearing pads, especially when the bridge has a superelevated deck, may cause the girders to slide right off the pads to the bridge pier or abutment concrete. This could restrict expansion and contraction of the superstructure that may crack the bridge.

4. Bearing pads must be oriented in the right direction.

   The correct direction is the direction shown in the Project Plans with the markings on a visible face per Subsection 1013-3.01(C). Sometimes this is parallel to the girder line. Other times, they are set in the same direction as the abutment. For bridges with extreme skew the bearing pads are usually aligned in the same direction as the girders, regardless of the angle created between the bearing pads and the abutments or piers. Incorrectly oriented bearing pads can cause the superstructure to slide off the bearing pads just as easily as unlevel pads. Any ambiguity as to how the bearing pad should be oriented should immediately be brought to the attention of the Designer.

5. Bearing pads must be set in the correct positions with the correct offsets.

   The Project Plans will show the exact location and orientation for each bearing pad. The Inspector should carefully consider how each pad would be placed, in what position it will be, and whether it will function as intended. Any confusion on how the pads are to be positioned should be clarified with the Project Supervisor or the Bridge Designer.

On post-tensioned box girder bridges, the galvanized steel plate that is cast into the superstructure will not be centered over the neoprene strip. There will be a slight offset to account for the shrinkage of the superstructure after post-tensioning. The Inspector should ensure this offset is built into the bearing assembly. See Section A-A of Exhibit 601-3.09-4. Other types of bearings used for this application should have a similar kind of offset. See Section A-A of Exhibit 601-3.09-5.

Jacking up a bridge superstructure to replace faulty bearing pads is an expensive undertaking. Inspectors must properly inspect, sample, and test bearing pads. The Special Provisions or Section 1013-3 describes the sampling and testing procedures the Contractor and the Inspector must follow.

601-4 Tests on Finished Structures

601-4.02 Dimensional Tolerances

Section 601-4.02 lists a variety of dimensional tolerances required for each member of a concrete structure. The Inspector must verify that each construction tolerance is met by taking the appropriate measurements in the field. For some tolerance measurements, you may need the assistance of a survey crew or special equipment such as a straight edge.

Dimensional tolerances are very important in structural concrete construction because:

- structural members that are too thin may have inadequate load carrying capacity;
- members that are out of tolerance in elevation, plumbness, or horizontal alignment can result in high stress concentrations in other members or within the member itself;
- members that are at the incorrect elevation may require the elevation difference to be corrected in other members that throw them out of dimensional tolerance;
- members that are too big may add additional loading to the structure unforeseen by the Designer; and
- members with too much dimensional variation may appear unsightly to the traveling public.

For example, a girder seat that is too low may require more deck buildup in order to get the riding surface at the correct grade. A column that is too out of plumb can result in severe stress concentrations in the pier cap or footing that may crack these members under normal loading.

Precast members have dimensional tolerances that are very important for the same reasons cited above

601-5 & 6 Method of Measurement & Basis of Payment

Concrete structures are typically measured and paid for on a lump sum basis. Minor precast structures (catch basins, manholes, etc.) are usually paid for on a unit or "each" basis. Subsection 109.10(A) of the Special Provisions will list major structures or groups of structures that must be paid on the basis of Lump Sum. Major concrete structures such as bridges and box culverts are usually measured and paid separately as one “lump sum structure” item. Each lump sum structure may have separate bid sub-items for girders, structure backfill, reinforcing steel, vertical restrainers, and other bridge components. These sub-items are intended to provide a means of measuring and paying for a partially completed structure on a monthly basis. The structure is still paid for as a lump sum with the total of the sub-items equaling the lump sum amount. The sub-items help track significant overruns or underruns in quantities that may require adjustments under Subsection 109.10.

When a structure is founded on drilled shafts or piling, separate bid items will be listed for these types of foundation. These bid items are not considered to be part of the lump sum structure amount. The work is paid for separately based on the actual quantities used. The project bidding schedule will show these bid items below the lump sum bid item for the structure.

There are three types of price adjustments allowed to a lump sum structure. The first type is due to strength deficiencies in the structural concrete. This is specified in Subsection 601-6. Subsection 1006-7.06(B) can be used to resolve strength deficiencies. The other two adjustments are due to quantity variations discovered

during construction or to adjustments ordered by the Bridge Designer. These are specified in Subsections 109.10 (B) and (C).

Quantity variations during bridge construction are not uncommon. It is recommended that the Inspector and the Project Supervisor closely monitor pay quantities. Some suggestions are:

- count all vertical restrainers and bearing pads that go into the structure;
- collect tickets from all concrete pours and document the quantities;
- retain the cut sheets for all the reinforcing bar placed;
- note any forming deviations and elevation differences that are consistently on the high or low side of the tolerances specified in Subsection 601-4.02;
- note any excessive form deflections during concrete pours;
- track the amount of rebar and wasted concrete left over after completion of key structural members; and
- spot check the dimensions of completed structural members (walls, decks, slabs, abutments, footings, etc.) and compare them with the dimensions shown on the Project Plans.

Subsection 109.10 of this manual further discusses how to handle quantity variations in lump sum structures.