APPENDIX A: PROPOSED TYPICAL CROSS SECTIONS

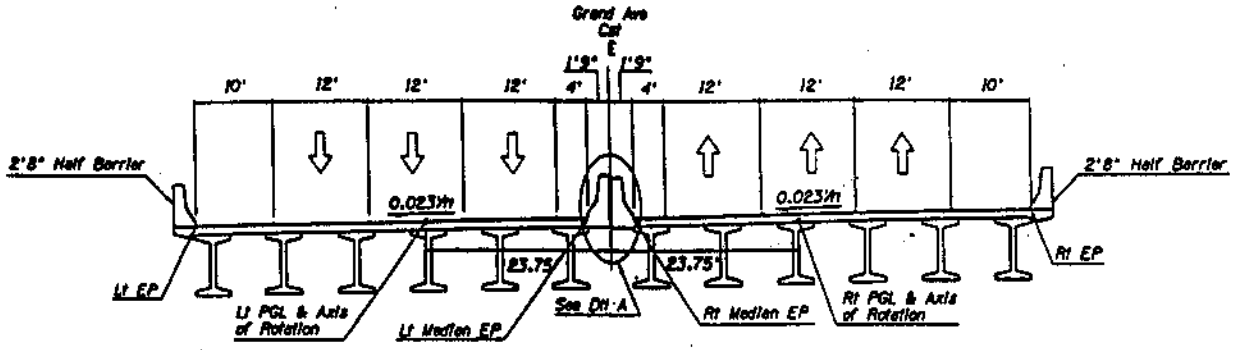

TYPICAL SECTION
Sta 257+75.12 to 263+72.38

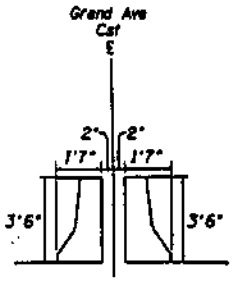

DETAIL A

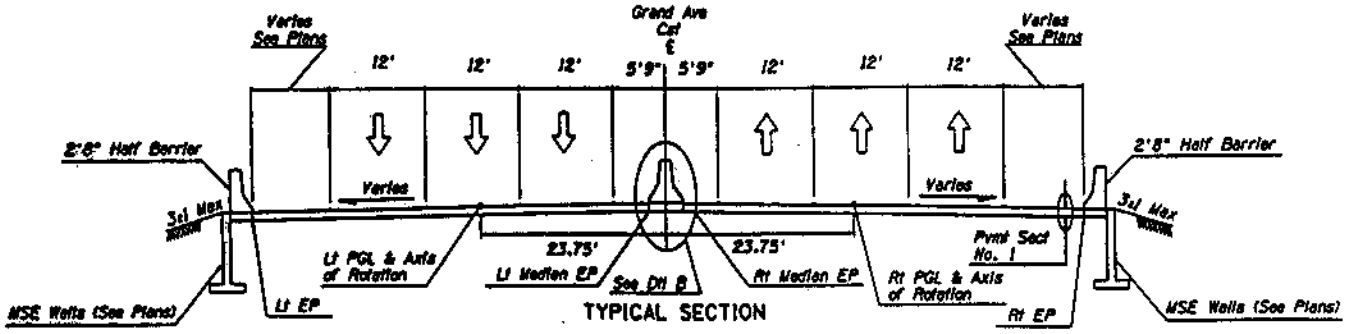

TYPICAL SECTION
Sta 242+49.61 to 257+53.48
Sta 263+68.91 to 287+56.59

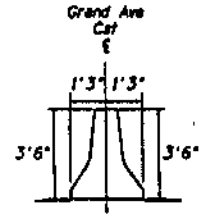

DETAIL B

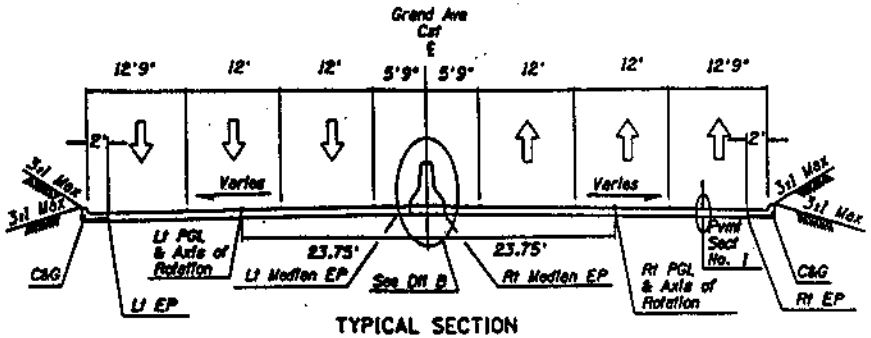

TYPICAL SECTION
Sta 238+48.88 to 242+49.61

PAVEMENT STRUCTURE
SECTION NO. 1

DESIGN	A. SCHWEIZER	3/00	ARIZONA DEPARTMENT OF TRANSPORTATION INTERMODAL TRANSPORTATION DIVISION ROADWAY DESIGN SERVICES
DRAWN	J. BROWN	3/00	
CHECKED	D. FRENCH	3/00	TYPICAL SECTIONS
DHS Brainer Woodward Clyde			
SCALE: US 60	LOCATION: US60 AT CAMELBACK RD & 43RD AVE		
TRACS NO. H5532 01L		060-8-500	___ OF ___

DESIGN CONCEPT REPORT

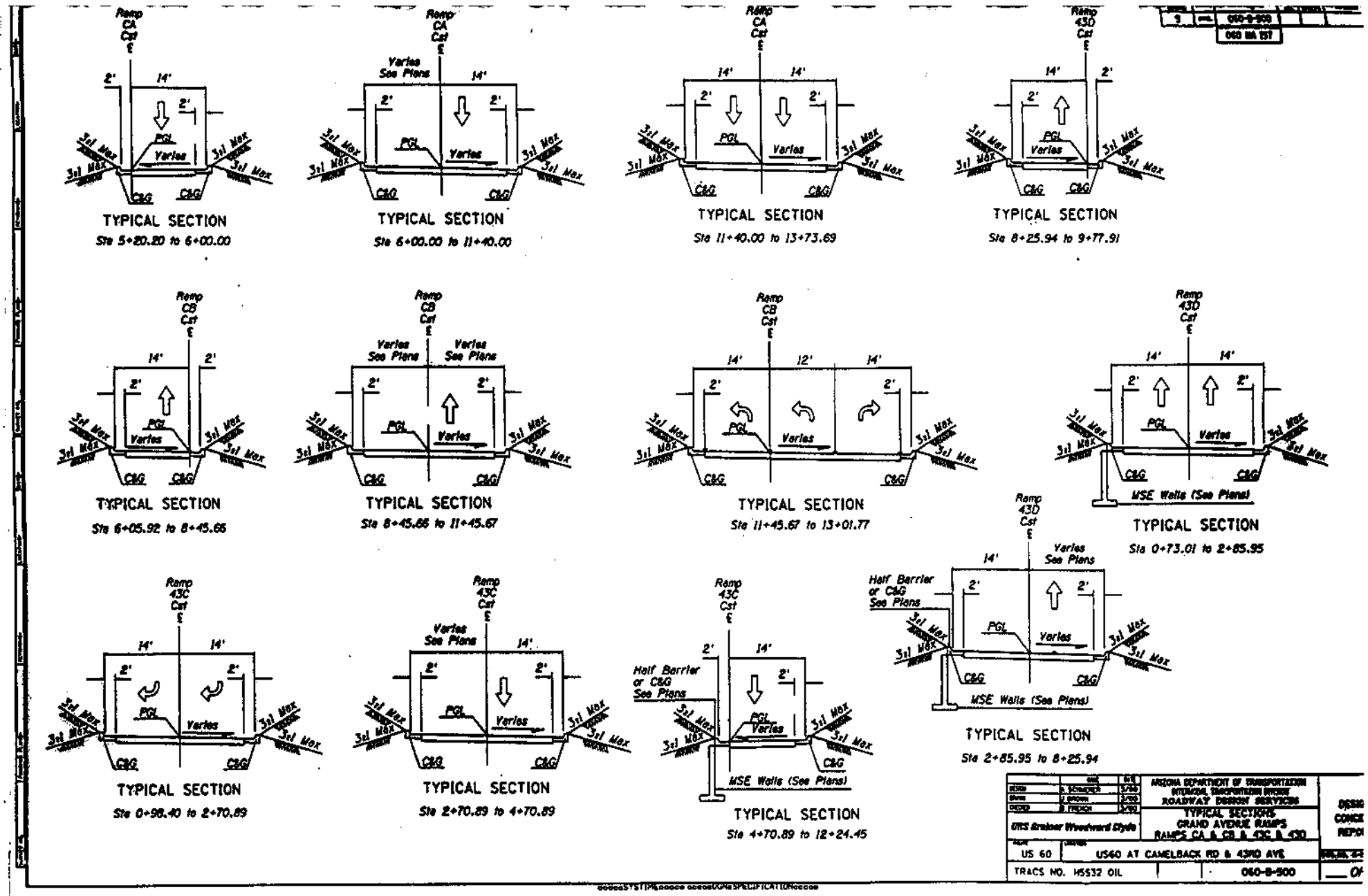

Ramp CA Cst ℄
2'
14'
2'
PGL
Varies
3:1 Max
C&G
TYPICAL SECTION
Sta 5+20.20 to 6+00.00
Ramp CA Cst ℄
Varies See Plans
14'
2'
2'
PGL
Varies
3:1 Max
C&G
TYPICAL SECTION
Sta 6+00.00 to 11+40.00
Ramp CA Cst ℄
14'
14'
2'
2'
PGL
Varies
3:1 Max
C&G
TYPICAL SECTION
Sta 11+40.00 to 13+73.69
Ramp 43D Cst ℄
14'
2'
2'
PGL
Varies
3:1 Max
C&G
TYPICAL SECTION
Sta 8+25.94 to 9+77.91
Ramp CB Cst ℄
14'
2'
2'
PGL
Varies
3:1 Max
C&G
TYPICAL SECTION
Sta 6+05.92 to 8+45.66
Ramp CB Cst ℄
Varies See Plans
Varies See Plans
2'
2'
PGL
Varies
3:1 Max
C&G
TYPICAL SECTION
Sta 8+45.66 to 11+45.67
Ramp CB Cst ℄
14'
12'
14'
2'
2'
PGL
Varies
3:1 Max
C&G
TYPICAL SECTION
Sta 11+45.67 to 13+01.77
Ramp 43D Cst ℄
14'
14'
2'
2'
PGL
Varies
3:1 Max
C&G
MSE Walls (See Plans)
TYPICAL SECTION
Sta 0+73.01 to 2+85.95
Ramp 43C Cst ℄
14'
14'
2'
2'
PGL
Varies
3:1 Max
C&G
TYPICAL SECTION
Sta 0+98.40 to 2+70.89
Ramp 43C Cst ℄
Varies See Plans
14'
2'
2'
PGL
Varies
3:1 Max
C&G
TYPICAL SECTION
Sta 2+70.89 to 4+70.89
Ramp 43C Cst ℄
2'
14'
2'
Half Barrier or C&G See Plans
PGL
Varies
3:1 Max
C&G
MSE Walls (See Plans)
TYPICAL SECTION
Sta 4+70.89 to 12+24.45
Ramp 43D Cst ℄
14'
Varies See Plans
2'
2'
Half Barrier or C&G See Plans
PGL
Varies
3:1 Max
C&G
MSE Walls (See Plans)
TYPICAL SECTION
Sta 2+85.95 to 8+25.94
ARIZONA DEPARTMENT OF TRANSPORTATION
INTERMODAL TRANSPORTATION DIVISION
ROADWAY DESIGN SERVICES
TYPICAL SECTIONS
GRAND AVENUE RAMPS
RAMPS CA & CB & 43C & 43D
URS Greiner Woodward Clyde
US 60
US60 AT CAMELBACK RD & 43RD AVE
TRACS NO. H5532 01L
060-B-500

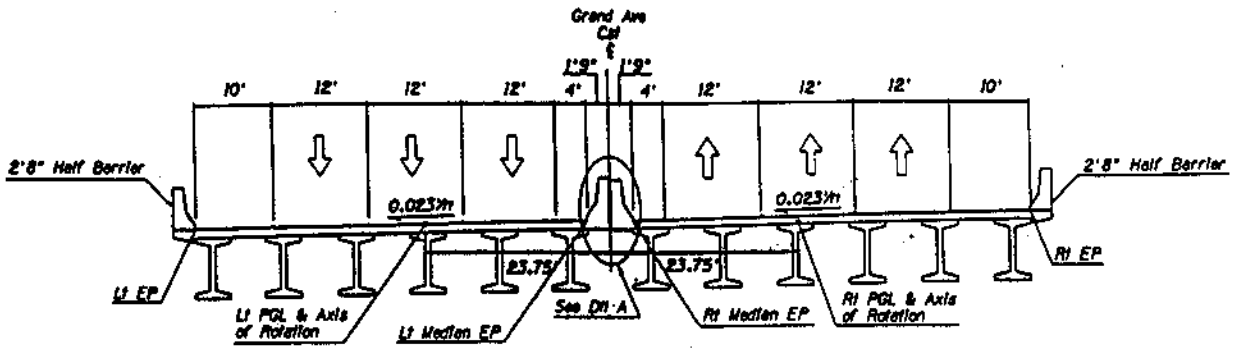

TYPICAL SECTION
Sta 257+75.12 to 263+72.38

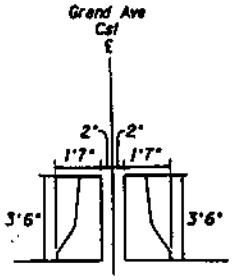

DETAIL A

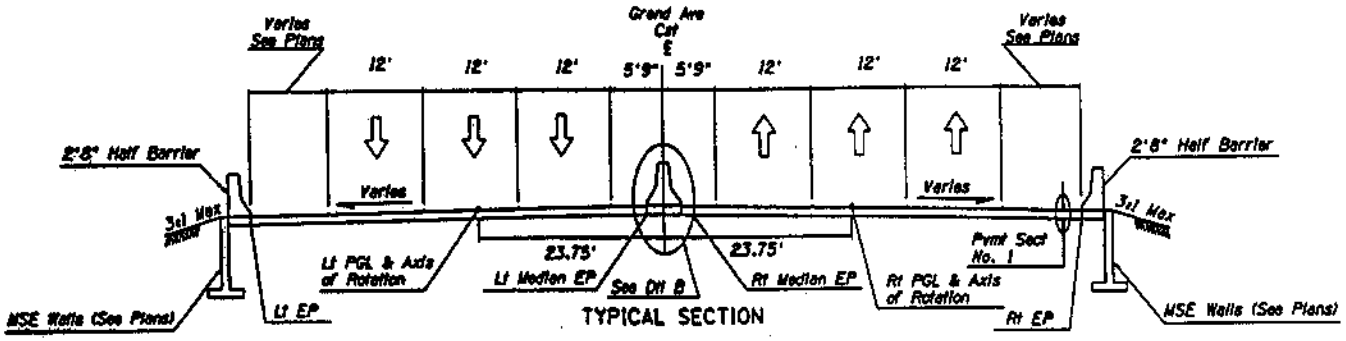

TYPICAL SECTION
Sta 242+49.61 to 257+53.48
Sta 263+68.91 to 287+56.59

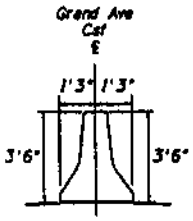

DETAIL B

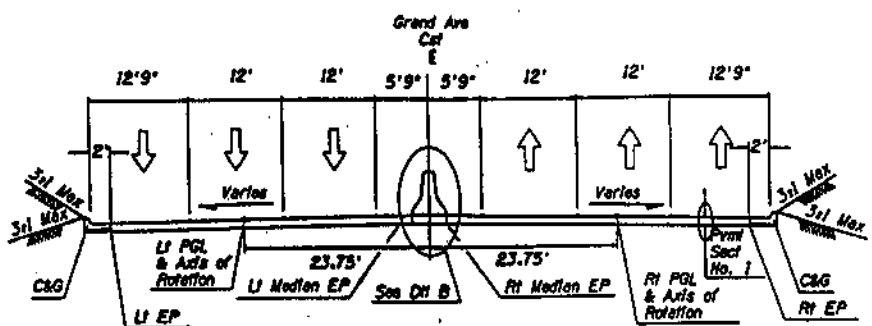

TYPICAL SECTION
Sta 238+48.88 to 242+49.61

PAVEMENT STRUCTURE
SECTION NO. 1

DESIGN	R. SCHMIDT	3/00	ARIZONA DEPARTMENT OF TRANSPORTATION INTERMODAL TRANSPORTATION DIVISION ROADWAY DESIGN SERVICES	DESIGN CONCEPT REPORT
DRAWN	J. BROWN	3/00		
CHECKED	D. FRENCH	3/00	TYPICAL SECTIONS	
DRS Brainer Woodward Clyde				
US 60	US60 AT CAMELBACK RD & 43RD AVE			
TRACS NO. H5532 01L			060-B-500	___ OF ___